

ROADWAY AND TRAFFIC DESIGN STANDARDS

APPROVED BY _____

JANUARY 1986

This document was promulgated at an annual cost of $15.02 per copy to provide standards and criteria for the design, construction and maintenance of highway transportation facilities by governmental agencies, consultants, contractors and the citizens of the State of Florida.

TABLE OF CONTENTS
ROADWAY DESIGN STANDARDS

ABBREVIATIONS AND SYMBOLS

001 Standard Abbreviations
002 Standard Symbols (3 Sheets)

EROSION CONTROL AND WATER QUALITY

100 Temporary Slope Drain And Sod Flume
101 Trash Retainer And Sediment Basin
102 Baled Hay Or Straw Barriers And Silt Fences (3 Sheets)
103 Turbidity Barriers
104 Erosion Control For Permanent Construction
105 Shoulder Sodding And Reworking On Existing Facilities

DRAINAGE

200 Structure Bottoms — Type J And P
201 Supplementary Details For Manholes And Inlets (3 Sheets)
205 Cover Height (4 Sheets)
209 Curb Inlet And Gutter Inlet Selection Guide
210 Curb Inlet Tops - Types 1, 2, 3, And 4
211 Curb Inlet Tops - Types 5 And 6 (2 Sheets)
212 Curb Inlet - Type 7
213 Curb Inlet - Type 8
214 Curb Inlet Top - Type 9
215 Curb Inlet Top - Type 10
217 Median Barrier Inlets Types 1, 2, 3, 4 And 5
218 Barrier Wall Inlet
220 Gutter Inlet - Type S
221 Gutter Inlet - Type V
229 Ditch Bottom And Median Inlet Selection Guide
230 Ditch Bottom Inlet - Type A
231 Ditch Bottom Inlet - Type B
232 Ditch Bottom Inlets - Types C, D, E, And H (3 Sheets)
233 Ditch Bottom Inlets - Types F And G
234 Ditch Bottom Inlet - Type J
235 Ditch Bottom Inlet - Type K
245 Underdrain Inspection Box
249 Pipe End Treatment Selection Guide
250 Straight Concrete Endwalls - Single And Multiple Pipe (2 Sheets)
251 Straight Concrete Endwalls - Single And Double 60" Concrete Pipe (2 Sheets)
252 Straight Concrete Endwalls - Single And Double 66" Concrete Pipe (2 Sheets)
253 Straight Concrete Endwalls - Single And Double 72" Concrete Pipe (2 Sheets)
255 Straight Concrete Endwall - Single 84" Concrete Pipe
258 Straight Sand-Cement Endwalls
260 U-Type Concrete Endwalls With Grates - 15" To 30" Pipe
261 U-Type Concrete Endwalls Baffles And Grate Optional - 15" To 30" Pipe (3 Sheets)

DRAINAGE (CONT.)

264 U-Type Concrete Endwall - Energy Dissipator - 30" To 72" Pipe
266 Winged Concrete Endwalls - Single Round Pipe
268 U-Type Sand-Cement Endwalls
270 Flared End Section
272 Cross Drain Mitered End Section (5 Sheets)
273 Side Drain Mitered End Section (6 Sheets)
274 Side Drain Mitered End Section
280 Miscellaneous Drainage Details (3 Sheets)
281 Ditch Pavement And Sodding (2 Sheets)
282 Back Of Sidewalk Drainage
283 Median Opening Flume
284 Concrete Spillways (2 Sheets)
285 French Drain
286 Underdrain
290 Concrete Box Culvert - Single, Double, Triple And Quadruple Barrels (4 Sheets)
293 Safety Modifications For Inlets In Box Culverts
295 Safety Modifications For Endwalls

CURBS AND PAVEMENT JOINTS

300 Curb, Curb And Gutter
301 Median Storage Lanes
302 Traffic Separators
303 Curb Return Profiles
304 Curb Cut Ramps (2 Sheets)
305 Concrete Pavement Joints (4 Sheets)
306 Bridge Approach Expansion Joint - Concrete Pavement

BARRIERS AND FENCES

400 Guardrail (13 Sheets)
410 Concrete Barrier Wall (8 Sheets)
415 Precast Concrete Temporary Barrier Wall (2 Sheets)
450 Fence Location
451 Fence - Type A
452 Fence - Type B
453 Cantilever Slide Gate - Type B Fence
460 Glare Screen

GENERAL

500 Excavation, Embankment And Grading
505 Embankment Utilization
510 Superelevation (2 Sheets)
511 Superelevation - Municipal Construction (2 Sheets)
513 Flexible Pavement - Layer Thickness For Structural Courses
514 Optional Base Groups And Structural Numbers
515 Turnouts (2 Sheets)
516 Turnouts - Resurfacing Projects
520 Walls, Handrails And Steps
525 Ramp Terminals (4 Sheets)
530 Rest Area Equipment
535 Tractor Crossings
540 Settlement Plate
545 Shrubbery - Back Of Guardrail Application
560 Railroad Crossing (8 Sheets)

TRAFFIC CONTROL

600 Structure Replacement - Rural
630 Temporary Crossover - Traffic Control - Rural
631 Temporary Crossover - Construction - Rural
640 Converting Two-Lanes To Four-Lanes Divided - Rural (2 Shts.)
641 Converting Two-Lanes To Four-Lanes Divided - Urban (2 Shts.)

DESIGN CRITERIA

700 Design Criteria Related To Highway Safety

1986

REVISIONS
ROAD DESIGN STANDARDS
1986

INDEX NUMBER	SHEET NUMBER	DESCRIPTION
001	1 of 1	Temporary and Permanent Construction Easements added. Board Foot Measure revised.
002	2 of 3	'Symbols' headings changed to 'General Symbols'. Easement Line added.
	3 of 3	Typographical correction.
102	1 of 3	Formerly Sheet 2 of 2.
	2 of 3	Formerly Sheet 1 of 1 of Index 103.
	3 of 3	One-half of former Sheet 1 of 2.
103	1 of 1	One-half of former Sheet 1 of 2 of Index 102.
201	1 of 3	Typographical correction.
	2 of 3	Pipe opening note deleted. (Transferred to Sheet 3 of 3) 'Eyebolt And Chain Requirements' for Index 218 added. Sump Bottom details added.
	3 of 3	Utility conflict manholes subtitles changed. Note 4 revised and notes 7 and 8 added under 'Optional Construction Joints' details. Pipe opening notes added to details for 'Minimum Dimensions For Box And Riser Segments. General Note 4 revised.
205	1 of 4	Title revised.
	2-4 of 4	New Sheets.
215	1 of 1	Dimension added to 'Grate Detail A'.
218	1 of 1	New Index.
229	1 of 1	General Note No. 4 revised. Typographical corrections.
230	1 of 1	Minor drawing corrections for rebar location. Sod quantity rounded.
231	1 of 1	Sod quantity rounded.
232	1 of 3	Grate changed to reflect steel type of Inlet Type D. General Note No. 2 completely revised.
	2&3 of 3	Sod quantities rounded.
233	1 of 1	Sod quantities rounded.

REVISIONS
ROAD DESIGN STANDARDS
1986

INDEX NUMBER	SHEET NUMBER	DESCRIPTION
234	1 of 1	Sod quantity rounded.
250	1 of 2	Dimension added to End View detail.
	2 of 2	Class I concrete quantity added for 54" Single CM pipe.
258	1 of 1	Quantity table expanded. Minor drawing changes.
260	1 of 1	Sod quantities rounded.
261	1&2 of 3	Complete revision. Expanded to include 3:1 slopes. Reinforcing steel modified. Structures regrouped.
	3 of 3	Formerly Sheet 2 of 2. Quantity table expanded to include 3:1 slopes. Grate angle material changed.
266	1 of 1	Front slope and tie bar revised.
272	1-4 of 5	Culvert pay limit redefined and sod quantities rounded.
273	1,3&4 of 6	Culvert pay limit redefined and sod quantities rounded.
	2 of 6	Same as above, also, 8",10" and 12" pipe sizes added to table of 'Dimensions and Quantities.'
	6 of 6	'Permissible Pavement Modifications For Class I Turnouts' detail added.
274	1 of 1	Sod quantities rounded.
280	2 of 3	Redrawn.
281	1 of 2	"a" and "b" labels corrected on Section EE. General Note No. 7 inserted.
	2 of 2	Complete revision. Expanded to include 3:1 slopes.
285	1 of 1	Bottom slab notation within structure redefined.
286	1 of 1	'External' added to filter fabric description in General Note No. 8. General Note No. 9 added. Underdrain Types Va and Vb added. Design Note No. 6 added and No. 7 revised and renumbered.
295	1 of 1	Sod quantities rounded.
300	1 of 1	FC-3 deleted from notation on 'Curb And Gutter Adjacent To Flexible Pavement' detail.'Concrete Bumper Guard' added.

REVISIONS
ROAD DESIGN STANDARDS
1986

INDEX NUMBER	SHEET NUMBER	DESCRIPTION
301	1 of 1	Pavement and curb slopes corrected on 'Juncture Details'
303	1 of 1	General Note No. 3 replaced.
304	1 of 2 2 of 2	Modified to conform with ATBCB 'Minimum Guidelines' and Requirements for Accessible Design.' Same as above, also, General Note No. 3 revised.
305	4 of 4	Trade name changed from 'Hugensmith Materials, Inc.' to 'Iron Manfacturing Co., Inc.'
400	1 of 13 2 of 13* 7 of 13 10 of 13 11 of 13 13 of 13	General Note No. 4 revised (8' to 6'). General Note No. 6 replaced. General Note No. 7 deleted. General Note No. 10 expanded. Remainder of notes renumbered. General Note No. 12 added. Curb and gutter details eliminated from all drawings. Reference to concrete barrier wall Index 410 added. Details for nailing bearing plate added. Spacing notations revised on 'Detail M.' Steel post sections expanded to include W6X9 and W8X18 to conform with AISC, Eighth Edition. Bolt, washer and nut deleted from 'Rail Splice' detail. Steel washer requirements added to 'Special End Shoe' detail. U.S. gage removed from 'Thrie Beam' and W Beam details.
410	1 of 8 3 of 8 4-8 of 8	General Note No. 1 added. Other notes renumbered. Shoulder gutter deleted from 'Barrier Wall On Retaining Wall' detail. 'Rigid Barrier Wall' detail added. New Sheets for barrier wall in curb and gutter sections.
451	1 of 1	General Note No. 13 added.
452	1 of 1	General Note No. 4-A (7), B(4), C(4) and D(2) revised. General Note No. 10 added and succeeding notes renumbered. Table for 'Type IV Vinyl Coated Fabric' added.
460	1 of 1	'Standard Specifications' reference corrected.
505	1 of 1	General Note No. 2 revised. General Note No. 3 added.
510	1 of 2	Curves Replotted on 'Design Superelevation Rates' chart.
513	1 of 1	Complete Revision.
514	1 of 1	Options under 'Codes 980 and 981' added.

REVISIONS
ROAD DESIGN STANDARDS
1986

INDEX NUMBER	SHEET NUMBER	DESCRIPTION
515	1 of 2	Completely revised to conform with manual entitled "Policy And Guidelines For Vehicular Connections To Roads On The State Highway System."
	2 of 2	Same as above, also, detail for 'adverse superelevation' added.
516	1 of 1	'Paving connections on existing facilities' information added.
700	1 of 1	'Clear Recovery Area (CRA)' changed to 'Clear Zone (CZ)' ◇ Footnote added. DIVIDED OR UNDIVIDED - DESIGN SPEED OF 35-45 MPH: CLEAR ZONE: Criteria revised. LIGHT POLES: Criteria revised.
ERRATA		
400	2 of 13	End Anchange Type II 'Note' expanded.
400	4 of 13	End Anchange Type II 'Note' expanded
400	9 of 13	Approach post spacing added to 'Installation-Case I And Case II' detail.

A	AREA
AASHO	AMERICAN ASSOCIATION OF STATE HIGHWAY OFFICIALS
AASHTO	AMERICAN ASSOCIATION OF STATE HIGHWAY AND TRANSPORTATION OFFICIALS
ABF	ASPHALT BASE COURSE
ABD	ABANDONED
AC	ACRE
ACT	ACTUATED
ADJ	ADJUST
ADT	ANNUAL AVERAGE DAILY TRAFFIC
AGG	AGGREGATE
AH	AHEAD
ALT	ALTERNATE
ALUM	ALUMINUM
APPRH	APPROACH
APPROX	APPROXIMATE
ARTF	ARTIFICIAL
ASPH	ASPHALT
ASPH CONC	ASPHALTIC CONCRETE
OR AC	ASPHALTIC CONCRETE
ASSEM	ASSEMBLY
ASTM	AMERICAN SOCIETY FOR TESTING MATERIALS
ATTNUATR	ATTENUATOR
AVE	AVENUE

B TO B	BACK TO BACK
BASC	BASCULE
BBL	BARREL
BC	BOTTLE CAP
BCCMP	BITUMINOUS COATED CORRUGATED METAL PIPE CULVERT
BCPA	BITUMINOUS COATED PIPE ARCH CULVERT
BCPCMP	BITUMINOUS COATED AND PAVED CORRUGATED METAL PIPE CULVERT
BCPPA	BITUMINOUS COATED AND PAVED PIPE ARCH CULVERT
BEG	BEGIN
BIT	BITUMINOUS
BK	BACK
BL	BASE LINE
BLDG	BUILDING
BLKHD	BULKHEAD
BLVD	BOULEVARD
BM	BENCH MARK
BOT	BOTTOM
BP	BORROW PIT
BRG	BEARING
BRKWY	BREAKAWAY
BTFLY	BUTTERFLY
BW	BARBED WIRE

C	CANTILEVER LENGTH
C & G	CURB AND GUTTER
CAP	CORRUGATED ALUMINUM PIPE
CB	CATCH BASIN
CBC	CONCRETE BOX CULVERT
CBS	CONCRETE BOX STRUCTURE
CC	CENTER TO CENTER
CD	CROSS DRAIN
CEM	CEMENT
CEM'D	CEMENTED
CH	CHANNEL
CH CH	CHANNEL CHANGE
CHNGBLE	CHANGABLE
CI	CAST IRON
CIP	CAST IRON PIPE
CIPL	CAST IN PLACE
CL	CLEARANCE OR CENTER LINE
CM	CONCRETE MONUMENT
CMP	CORRUGATED METAL PIPE
CO	COUNTY
COM	COMMERCIAL
COMP	COMPOSITE
CONC	CONCRETE
CONST	CONSTRUCT
CONTRL	CONTROLLER
CONT	CONTINUATION
CONTR	CONTRACTOR
COORD	COORDINATE
COR	CORNER
CORR	CORRUGATED
CP	CONCRETE PIPE
CRS	COURSE
CS	CURVE TO SPIRAL
CSE	COURSE
CTLVR	CANTILEVER
CTR	CENTER
CULV	CULVERT
CY	CUBIC YARD
CYL	CYLINDRICAL

D	DEGREE OF CURVATURE
DA	DRAINAGE AREA
DBL	DOUBLE
D-CSE	DOUBLE COURSE
D-POST	DOUBLE POST
DCS	DEGREE OF CURVATURE (SPIRAL)
DELIN	DELINEATORS
DEMOB	DEMOBILIZATION
DEPT	DEPARTMENT
DET	DETOUR
DHV	DESIGN HOURLY VOLUME
DT	DITCH
DI	DROP INLET
DIA	DIAMETER
DIM	DIMENSION
DISP	DISPOSAL
DOT	DEPARTMENT OF TRANSPORTATION
DPI	DITCH POINT INTERSECTION
DR	DRAIN
DRIV	DRIVEN
DRWY	DRIVEWAY
DS	DESIGN SPEED
DWG	DRAWING

E	EAST
E	RATE OF SUPERELEVATION
E TO E	END TO END
E=	EXTERNAL DISTANCE
EA	EACH
EB	EASTBOUND
EL OR ELEV	ELEVATION
ELAST	ELASTOMERIC
ELEC	ELECTRIC
ELLIP	ELLIPTICAL
EMBK	EMBANKMENT
EMUL	EMULSIFED
ENCL	ENCLOSURE
ENGR	ENGINEER
EOS	END OF SURVEY
EQ	EQUATION OR EQUAL
EQUIP	EQUIPMENT
ESMT	EASEMENT
EST	ESTIMATE
ESTBLMNT	ESTABLISHMENT
EW	ENDWALL
EXCAV	EXCAVATION
OR EXC	EXCAVATION
EXIST	EXISTING
EXP	EXPANSION
EXT	EXTENSION

F	FILL
F & I	FURNISH & INSTALL
F TO F	FACE TO FACE
FA	FEDERAL AID
FAP	FEDERAL AID PROJECT
FE	FLOOR ELEVATION
FED	FEDERAL
FERT	FERTILIZER
FETS	FLARED END TERMINAL SECTION
FH	FIRE HYDRANT
FHWA	FEDERAL HIGHWAY ADMINISTRATION
FIN	FINISH
FL	FLOW LINE
FLEX	FLEXIBLE
FOUND	FOUNDATION
FR	FRAME
FRANG	FRANGIBLE
FT	FEET
FURN	FURNISH
FUT	FUTURE

GA	GAUGE, GAGE
GAL	GALLON
GALV	GALVANIZED
GAR	GARAGE
GD	GUTTER DRAIN
GIP	GALVANIZED IRON PIPE
GR	GRADE OR GUARDRAIL
GRD	GROUND
GTTR	GUTTER

HDWL	HEADWALL
HNDRL	HANDRAIL
HORIZ	HORIZONTAL
HR	HOUR
HSE	HOUSE
HW	HIGH WATER
HWY	HIGHWAY
HYD	HYDRANT

I	EXTERNAL ANGLE(DELTA)
ID	INSIDE DIAMETER
IN	INCH
INC	INCORPORATED
INCL	INCLUDED
IP	IRON PIPE
INSTL	INSTALL
INTCH	INTERCHANGE

JB	JUNCTION BOX
JCT	JUNCTION

L	LENGTH OF CURVE
LA	LIMITED ACCESS
LB	POUND
LBR	LIMEROCK BEARING RATIO
LC	LONG CHORD
LF	LINEAR FEET
LGTH	LENGTH
LIN	LINEAR
LMRK	LIMEROCK
LS	LENGTH OF SPIRAL
LT	LEFT
LT'D	LIGHTED
L/W	LIGHTWEIGHT

M	MIDDLE ORDINATE DISTANCE
MAINT	MAINTENANCE
MATL	MATERIAL
MAX	MAXIMUM
MED	MEDIAN
MESS	MESSAGE
MH	MANHOLE
MHW	MEAN HIGH WATER
MI	MILE
MIN	MINIMUM
MISC	MISCELLANEOUS
MLW	MEAN LOW WATER
MOBL	MOBILIZATION
MOD	MODIFY
MON	MONUMENT
MP	MILE POST
MPH	MILES PER HOUR
MSL	MEAN SEA LEVEL
MT'D	MOUNTED
MTB	MEDIAN BARRIER

N	NORTH
N & C	NAIL & (BOTTLE) CAP
NB	NORTHBOUND
NE	NORTHEAST
NIC	NOT IN CONTRACT
NO	NUMBER
NW	NORTHWEST

O PASS	OVERPASS
O TO O	OUTSIDE TO OUTSIDE
OD	OUTSIDE DIAMETER
OPT	OPTICALLY
OVHD	OVERHEAD

PAVT	PAVEMENT
PC	POINT OF CURVATURE
PCC	POINT OF COMPOUND CURVATURE OR PLAIN CEMENT CONCRETE
PCE	PERMANENT CONSTRUCTION EASEMENT
PEDES	PEDESTRIAN
PEN	PENETRATION
PG	PROFILE GRADE
PH	PHASE
PI	POINT OF INTERSECITON
PK	PER CAP
PL	PROPERTY LINE
POC	POINT ON CURVE
POST	POINT ON SEMI TANGENT
POT	POINT ON TANGENT
PP	POWER POLE
PRC	POINT OF REVERSE CURVATURE
PRCST	PRECAST
PREST	PRESTRESSED
PROG	PROGRAMMED
PROJ	PROJECT
PRM	PERMANENT REFERENCE MONUMENT
PROV	PROVISIONS
PRSE	PRESSURE
PS&E	PLANS, SPECIFICATIONS AND ESTIMATES
PT	POINT OF TANGENCY
P-TIME	PRE-TIMED
Q	PEAK DISCHARGE

R	RADIUS
R-	RANGE
RBAC	ROCK BASE ASPHALTIC CONCRETE
RBST	ROCK BASE SURFACE TREATMENT
RCP	REINFORCED CONCRETE PIPE
RCPA	REINFORCED CONCRETE PIPE ARCH
RD	ROAD
RD-SD	ROADSIDE
RDWY	ROADWAY
REF	REFERENCE
REFL	REFLECTIVE
REINF	REINFORCED
REJUV	REJUVENATION
RELOC	RELOCATED
REM	REMOVAL
REPL	REPLACE
RES	RESIDENCE
RM	REFERENCE MONUMENT
RP	REFERENCE POINT
RR	RAILROAD
RSF	RESURFACE
RT	RIGHT
R/W	RIGHT OF WAY

S	SOUTH
SAHM	SAND-ASPHALT HOT MIX
SAN	SANITARY
SB	SOUTHBOUND"
SBAC	SHELL BASE ASPHALTIC CONCRETE
SBRM	SAND BITUMINOUS ROAD MIX
SBST	SHELL BASE SURFACE TREATMENT
SC	SEAL COAT
SCST	SAND-CLAY SURFACE TREATMENT
SD	SIDE DRAIN
SE	SOUTHEAST
SECT	SECTION
SED	SEDIMENT
SEP	SEPARATOR
SEQ	SEQUENTIAL
SF	SHRINKAGE FACTOR
SG	SUBGRADE
SHLDR	SHOULDER
SPEC	SPECIFICATION
SQ FT	SQUARE FOOT
SQ IN	SQUARE INCH
SQ YD OR SY	SQUARE YARD
SR	STATE ROAD
SS	STORM SEWER
SSMD	SOLID STATE MODULAR DESIGN
ST	SURFACE TREATMENT OR STREET
STA	STATION
STAB	STABILITY
STD	STANDARD
STL	STEEL
STR	STRUCTURE
SUBGR	SUBGRADE
SUPPTS	SUPPORTS
SURF	SURFACE
SW	SOUTHWEST OR SIDEWALK
SYST	SYSTEM
S-POST	SINGLE POST

T	TANGENT LENGTH OF CURVE
TBM	TEMPORARY BENCH MARK
TC	TANGENT TO CURVE
TCE	TEMPORARY CONSTRUCTION EASEMENT
TCP	TERRA COTTA PIPE
TEL	TELEPHONE
TEMP	TEMPERATURE
THRMPLSTC	THERMPLASTIC
TN	TON
TRAF	TRAFFIC
TREAT	TREATMENT
TS	TANGENT TO SPIRAL
TSC	LENGTH OF TANGENT (SPIRAL CURVE)
TWP	TOWNSHIP
TYP	TYPICAL
T-CSE	TRIPLE COURSE

U PASS	UNDERPASS
UNDGRD	UNDERGROUND
UNDDR	UNDERDRAINS
UNDRDWY	UNDERROADWAY
UNL	UNLOADED
UNTR	UNTREATED
USC&GS	US COAST AND GEODETIC SURVEY (NOW NATIONAL GEODETIC SURVEY)
USGS	US GEOLOGICAL SURVEY

VAR	VARIABLE
VC	VERTICAL CURVE
VF	VERTICAL FOOT
VCP	VIRTIFIED CLAY PIPE
VEH	VEHICLE
VERT	VERTICAL
VOL	VOLUME
VW	VARIABLE WIDTH

W	WEST
WB	WESTBOUND
WM	WATER MAIN
WT	WATER TABLE OR WEIGHT

X	COORDINATE DISTANCE (EAST-WEST)
X RD	CROSS ROAD
XING	CROSSING
X-SEC	CROSS SECTION
Y	COORDINATE DISTANCE(NORTH-SOUTH)
2L	TWO LANE

UNITS OF MEASURE

AC	ACRE
AS	ASSEMBLY
BA	BARREL
BU	BUSHEL
CF	CUBIC FT.
CO	PER CLEANOUT
CY	CUBIC YARD
CW	CWT
DA	DAYS
EA	EACH
MBM	(MBM) 1000 BOARD MEASURE
FT	FOOT
GA	GALLON
GM	GROSS MILE
LB	POUND
LF	LIN. FT.
LS	LUMP SUM
ED	PER EACH PER DAY
LU	PER LUMINAIRE
MG	THOUSAND GALLONS
NM	NET MILE
PB	PER BUILDING
PC	PER CLUSTER
PE	PILE
PI	PER INTERSECTION
PJ	PER JOINT
PL	PLANT
PO	POST
PP	PER POLE
PW	PER WELL
RM	ROAD MILE
SF	SQUARE FOOT
SP	SPAN
SY	SQUARE YARD
TN	TON
VF	VERTICAL FOOT

STATE OF FLORIDA DEPARTMENT OF TRANSPORTATION
ROAD DESIGN

STANDARD ABBREVIATIONS

	Names	Dates
Designed by		
Drawn by		
Checked by		

Approved By
Deputy Design Engineer, Roadways

F.H.W.A. Approved: 12/13/74

Revision No.	Sheet No.	Index No.
86	1 of 1	001

STANDARD SYMBOLS FOR KEY MAP

- Highway. With Full Control Of Access
- Highway With Frontage Roads
- Highway Interchange
- Proposed Controlled Access Highway
- Divided Highway
- Hard Surfaced Road
- Soil, Gravel Or Shell Surfaced Road
- Graded And Drained Road
- Unimproved Road
- Primitive Road
- P — Private Road
- Streets In Inset Or Delimited Areas
- Extension Of Local Roads Within Cities
- FAI — Federal Aid Interstate Highway
- FAU — Federal Aid Urban Highway
- FAP — Federal Aid Primary Highway
- FAS — Federal Aid Secondary Highway
- NFR — National Forest Road
- SFR — State Forest Road
- SPR — State Park Road
- Interstate Highway
- US Numbered Highway
- State Highway
- County Road

- Railroad
- Double Track Railroad
- Abandoned Railroad
- Railroad Station
- Grade Crossing
- Railroad Above
- Railroad Below
- Military Field
- Commercial Or Municipal Airport
- Landing Area Or Strip
- Runways

- FF — Free Ferry
- TF — Toll Ferry
- Canal Or Drainage Ditch
- Intracoastal Waterway
- Narrow Stream
- Wide Stream
- Dam
- Dam Or Spillway With Lock
- Dam With Road
- Flood Control Structure
- Lake, Reservoir Or Pond
- Intermittent Pond
- Meandered Lake
- Marsh Or Swamp
- Mangroves
- Levee Or Dike
- Levee Or Dike With Road
- Highway Bridge
- 3 — Small Bridges Closely Spaced
- Drawbridge
- Highway Grade Separation
- Tunnel
- State Boundary Line
- County Boundary Line
- Civil Township Boundary
- Extended Township Line
- Land Grant Line
- Land Section Line
- State Survey Section Line
- Survey By Others
- Location Of Inset Boundary Within Map
- Military Reservation Boundary
- College Or University Boundary
- Corporate Limits
- Delimited Area, Population Est.
- Reservation, Forest Or Park Boundary
  Wildlife Refuge Boundary

- Residential Area Under Development
- Lighthouse
- State Capital
- County Seat
- Other City Or Village
- Seminole Indian Village
- Welcome Station
- WP — Wayside Park Or Small Park
- WP — Park With Boat Ramp
- B — Boat Ramp
- Museum
- Recreational Area Or Historic Site
- Scenic Site
- Post Office
- School
- Church
- Cemetery
- Church And Cemetery
- Hospital, Health Center Or Rest Home
- Toll House, Port Of Entry Or Weight Station
- Fair Grounds, Race Course Or Rodeo Arena
- Mine Or Strip Mine
- Governmental Research Station

- Agricultural Inspection Station
- FM — Farmers Market
- Game Preserve
- Game Checking Station
- Bird Sanctuary
- Fire Control Headquarters
- Lookout Tower
- FS — Fire Station
- Patrol Or Police Station
- Correctional Institution Or Road Camp
- DOT — Department Of Transportation Facility
- Coast Guard Station
- A — Armory
- J — Junkyard
- F — Sanitary Fill
- S — Sewage Disposal Plant
- I — Incinerator
- Power Plant
- Power Substation
- Communications Facility
- Locked Gate Or Fence
- WOOD A — Triangulation Station

STATE OF FLORIDA DEPARTMENT OF TRANSPORTATION
ROAD DESIGN

STANDARD SYMBOLS

	Name	Date
Designed by		
Drawn by		
Checked by		

Approved By: D.C. Bullard, State Design Engineer, Roadways

F.H.W.A. Approved:

Revision No.	Sheet No.	Index No.
83	1 of 3	002

STANDARD SYMBOLS FOR PLAN SHEETS

GENERAL SYMBOLS

- STATE LINE
- COUNTY LINE
- TOWNSHIP LINE
- SECTION LINE
- CITY LINE
- BASE OR SURVEY LINE
- RIGHT-OF-WAY LINE
- EASEMENT LINE
- LIMITED ACCESS LINE
- FENCE LINE
- NATIONAL OR STATE PARK OR FOREST
- GRANT LINE
- RAILROAD (DRAINAGE MAPS)
- RAILROAD (DETAIL PLANS)
- FENCE (LIMITED ACCESS)
- BOX CULVERT
- BRIDGE
- SIDE DRAIN PIPE
- 18" STORM SEWER
- INLET
- MANHOLE
- TIED LONGITUDINAL JOINT
- KEYED LONGITUDINAL JOINT
- DOWELED TRANSVERSE EXPANSION JOINT
- DOWELED TRANSVERSE CONTRACTION JOINT
- TRANSVERSE CONTRACTION JOINT WITHOUT DOWELS
- ALACHUA TRIANGULATION STATION
- B.M. NO. 112 BENCH MARK
- POINT OF INTERSECTION
- NORTH POINT
- TYP. EDGES OF EXISTING PAVEMENT AND SIDEWALK
- BASE LINE
- CENTERLINE
- PROPERTY LINE
- DELTA ANGLE
- APPROXIMATE
- ROUND
- CURB
- CURB AND GUTTER
- WATER WELL, SPRING
- LEVEE
- MP 327 RAILROAD MILE POST
- GATE
- PUMP ISLAND
- STORAGE TANK (SURFACE)
- STORAGE TANK (UNDERGROUND)

GENERAL SYMBOLS

- MINE OR QUARRY
- B P BORROW PIT
- CHURCH
- S STORE
- RES RESIDENCE
- B BARN
- SCHOOL
- STREAM
- SHORE LINE
- MARSH
- HEDGE
- TREES
- EDGE OF WOODED AREA
- SHRUBBERY
- GROVE OR ORCHARD
- L.T. SKEW RT. ℄ RT. SKEW LT. DEFINITION OF SKEW FOR CROSS DRAINS AND BARRELS OF CONCRETE BOX CULVERTS
- CONCRETE
- WOOD
- e RATE OF SUPERELEVATION

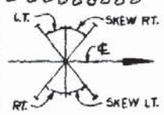

UTILITY ADJUSTMENT SYMBOLS

	EXISTING	PROPOSED
POWER POLE		
OVERHEAD POWER CABLE	OE(7.5KV)	OE(7.5KV)
TELEPHONE POLE		
OVERHEAD TELEPHONE CABLE	OT(100PR)	OT(100PR)
COMBINATION POLE		
GUY WIRE AND ANCHOR PIN		
BURIED POWER CABLE	BE(7.5KV)	BE(7.5KV)
ELECTRIC DUCT	BE4MTD(7.5KV)	BE4MTD(7.5KV)
BURIED TELEPHONE CABLE	BT(200PR)	BT(200PR)
TELEPHONE DUCT	BT6MTD	BT6MTD
TOWER		
LIGHT POLE		
GAS MAIN	6" GM	6" GM
WATER MAIN	6" WM	6" WM
SANITARY SEWER	8" SAN	8" SAN
MANHOLE		
WATER METER		
VALVE		
FIRE HYDRANT		
UNDERGROUND CABLE TELEVISION	UG(CATV)	UG(CATV)
OVERHEAD CABLE TELEVISION	OH(CATV)	OH(CATV)

STATE OF FLORIDA DEPARTMENT OF TRANSPORTATION
ROAD DESIGN

STANDARD SYMBOLS

	Name	Date	Approved By
Designed by			
Drawn by	CDP	8/72	Deputy Design Engineer, Roadways
Checked by	COR	8/72	Revision No. 86 / Sheet No. 2 of 3 / Index No. 002
F.H.W.A. Approved: 7/7/75			

STANDARD SYMBOLS FOR PLAN SHEETS

TRAFFIC SIGNALS SYMBOLS

	EXISTING	PROPOSED
TRAFFIC SIGNAL HEAD (SPAN WIRE MOUNTED)		
TRAFFIC SIGNAL HEAD (PEDESTAL MOUNTED)		
TRAFFIC SIGNAL HEAD (MAST ARM MOUNTED)		
TRAFFIC SIGNAL POLE (CONCRETE, WOOD, METAL)		
VEHICLE DETECTOR (LOOP)		
SIGNAL CABLE (ON MESSENGER WIRE)		
CONDUIT		
VEHICLE DETECTOR (OTHERS)		
PEDESTRIAN DETECTOR (PUSHBUTTON)		
PEDESTRIAN SIGNAL HEAD (POLE OR PEDESTAL MOUNTED)		
CONTROLLER CABINET (BASE MOUNTED)		
CONTROLLER CABINET (POLE MOUNTED)		
WALK - DON'T WALK	W-DW	
FLASH	FL.	
SIGNAL FACE NUMBER	5	
ITEM NUMBER	630-43	
SIGNAL LENS		
PROGRAMMED SIGNAL HEAD	P	
MESSENGER WIRE		
POLE TABULATION CROSS REFERENCE	3	
POLE TABULATION CROSS REFERENCE (JOINT USE POLE)	* 3	
SIGNAL PHASE	∅	

LIGHTING SYMBOLS

- NEW POLE & LUMINAIRE
- EXISTING POLE & LUMINAIRE
- EXISTING POLE & LUMINAIRE TO BE REMOVED
- FINAL POSITION OF RELOCATED OR ADJUSTED POLE & LUMINAIRE
- NEW HIGH MAST LIGHTING TOWER
- CITY OR UTILITY OWNED LUMINAIRE & POLE
- PVC (POLYVINYL CHLORIDE) LIGHTING CONDUIT AND CONDUCTORS
- RIGID GALVANIZED LIGHTING CONDUIT AND CONDUCTORS
- CONCRETE LIGHTING PULL-BOX
- WATERPROOF LIGHTING PULL-BOX
- LIGHTING DISTRIBUTION POINT
- NEW JOINT USE POLE
- EXISTING USE POLE
- UNDER DECK LIGHTING FIXTURE

SIGNING AND PAVEMENT MARKING SYMBOLS

- PAVEMENT ARROW
- SINGLE SOLID LINE
- DOUBLE SOLID LINE
- SKIP LINE
- STOP BAR
- TRAFFIC SIGN (POST MOUNTED)
- TRAFFIC SIGN (OVERHEAD)
- SIGN NUMBER (13)
- SIGN ITEM NUMBER 700-93
- TRAFFIC FLOW ARROW

STATE OF FLORIDA DEPARTMENT OF TRANSPORTATION
ROAD DESIGN

STANDARD SYMBOLS

	Name	Date
Designed by		
Drawn by	CDP	8/72
Checked by	COR	8/72
F.H.W.A. Approved: 7/7/75		

Approved By
Deputy Design Engineer, Roadways

Revision No.	Sheet No.	Index No.
86	3 of 3	002

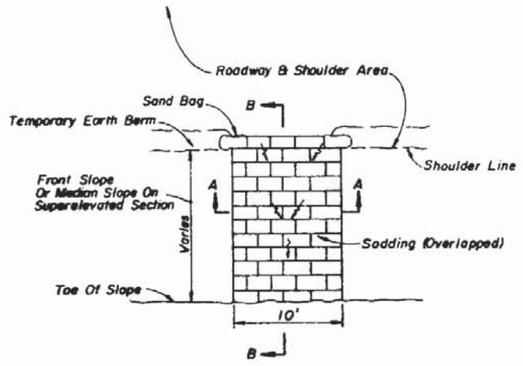

PLAN

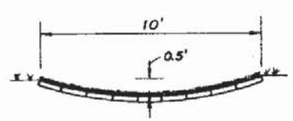

SECTION AA

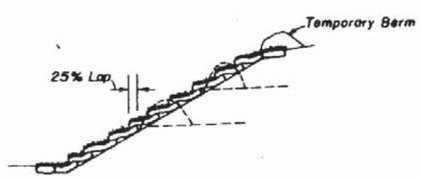

SECTION BB

SOD FLUME (SODDING OVERLAPPED)

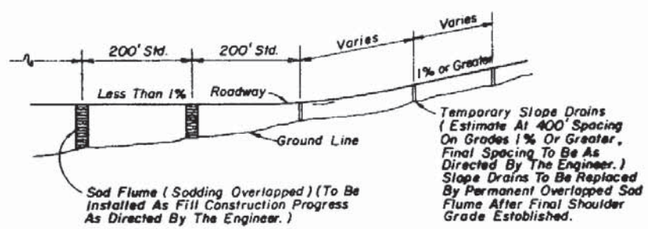

ELEVATION

SLOPE DRAIN APPLICATION

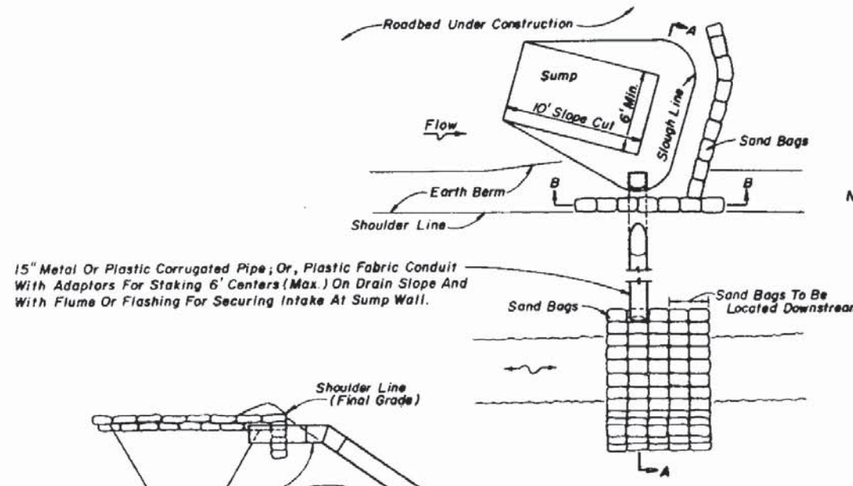

PLAN

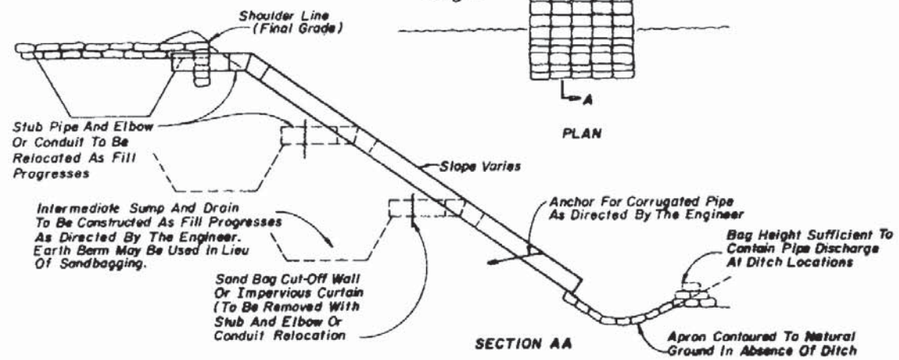

SECTION AA



SECTION BB

TEMPORARY SLOPE DRAIN

Note:
Slope drain pipe to be paid for as Slope Drains (Temporary) LF, based on linear feet of pipe or conduit installed. Payment to be made for one installation per site, including one stub and elbow or one intake flume or flashing. Sump construction and maintenance and curtains to be included in cost for Slope Drains (Temporary). Sand bags to be paid for as Sandbagging CY.

STATE OF FLORIDA DEPARTMENT OF TRANSPORTATION
ROAD DESIGN

TEMPORARY SLOPE DRAIN AND SOD FLUME

	Names	Dates
Designed by		
Drawn by		
Checked by		

Approved By
Deputy Design Engineer, Roadways

F.H.W.A. Approved: 10/7/80

Revision No.	Sheet No.	Index No.
83	1 of 1	100

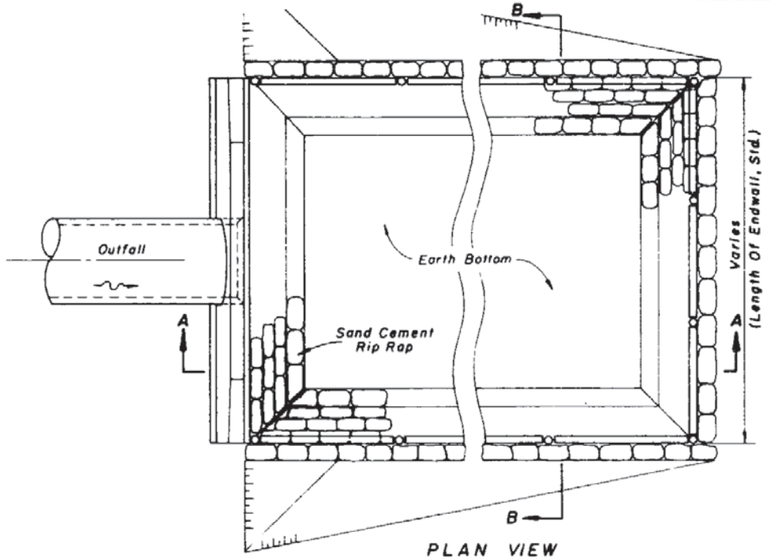

PLAN VIEW

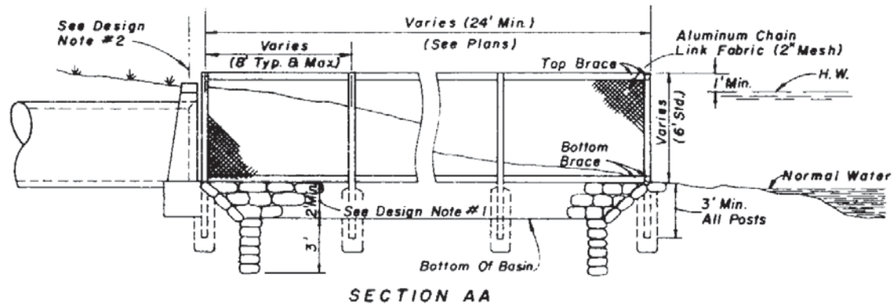

SECTION AA

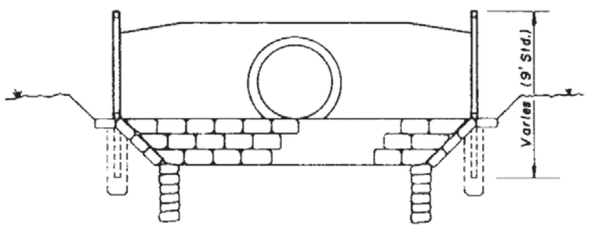

SECTION BB

TYPE A

INTENDED FOR USE WHEN THE STORM SEWER OUTFALLS ADJACENT TO A SHORE LINE

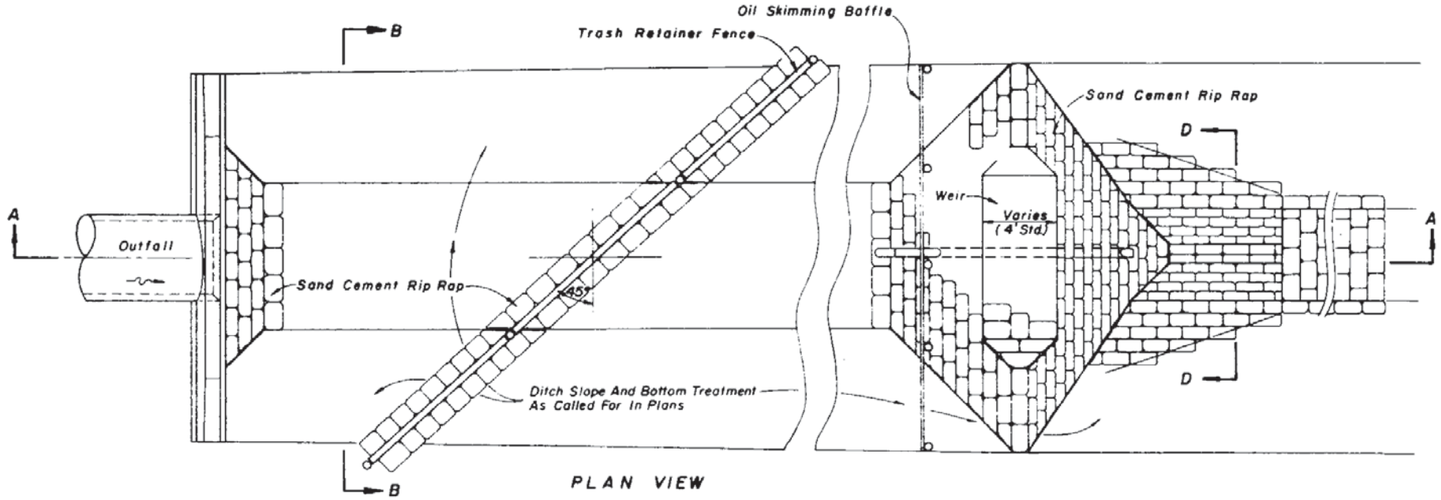

PLAN VIEW

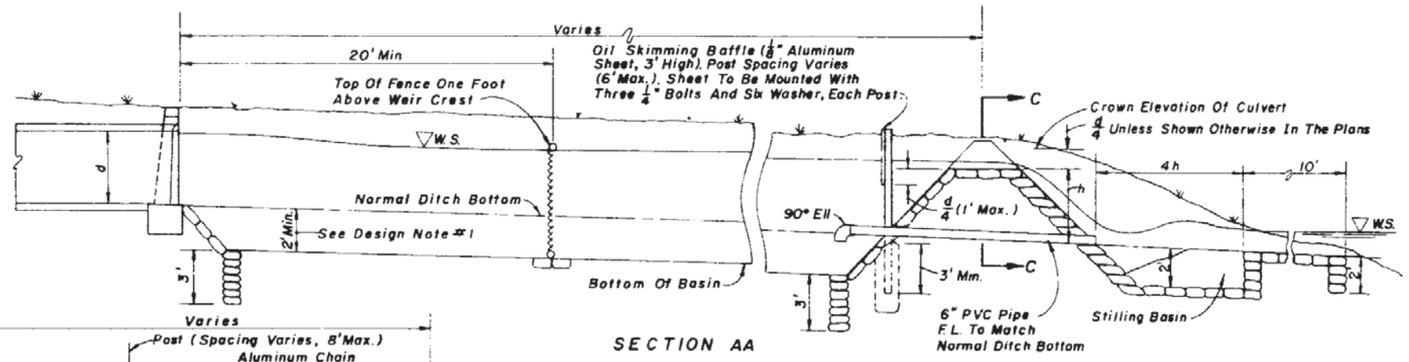

SECTION AA

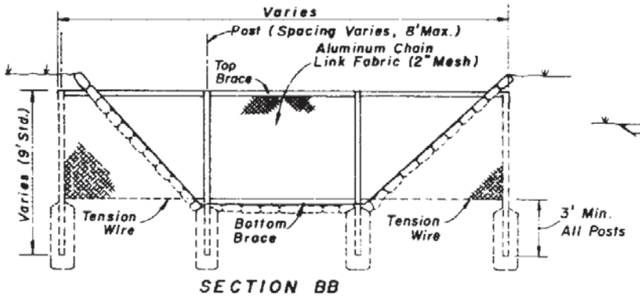

SECTION BB

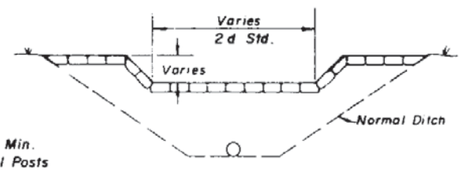

SECTION CC

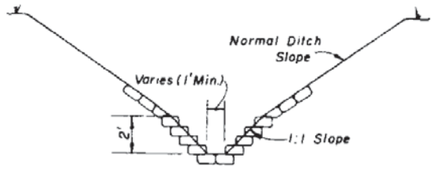

SECTION DD

TYPE B

INTENDED FOR USE WHEN THE STORM SEWER OUTFALLS IN AN OPEN DITCH

GENERAL DESIGN NOTES

1. Basins should be as deep as practical with a minimum depth of 2.0 feet.
2. In Type A, when the top of endwall is below high water, fence also will be required along the top of the endwall.
3. In Type B, the weir shall be located as far from the endwall as practical. On steep ditch grades two or more weirs may be required. Intermediate weirs shall be constructed without stilling basins.
4. In Type B, the 6" PVC pipe shall be constructed unless shown otherwise in the plans.

GENERAL CONSTRUCTION NOTES

1. Fence materials shall be aluminum or concrete only.
2. Aluminum posts shall be 3" diameter minimum. Aluminum rail braces shall be in accordance with Index 452. Concrete posts and rail braces shall be in accordance with 451. All posts to be set in concrete.
3. Fabric shall be installed to inside of posts and rail braces, and tied to posts and braces at 6" centers.
4. For additional details on fencing, see Index Nos. 451 and 452.
5. All basin slopes to be 1:1 unless detailed otherwise in the plans.
6. Sediment basins to be constructed prior to commencement of upland construction. Maintenance and clean out to be by the Contractor until acceptance of project by the Engineer.

STATE OF FLORIDA DEPARTMENT OF TRANSPORTATION
ROAD DESIGN

TRASH RETAINER AND SEDIMENT BASIN

	Names	Dates
Designed by	WJR	5/74
Drawn by		
Checked by	HLB	6/74

F.H.W.A. Approved 10/7/80

Approved By
Deputy Design Engineer, Roadways

Revision No.	Sheet No.	Index No.
80	1 of 1	101

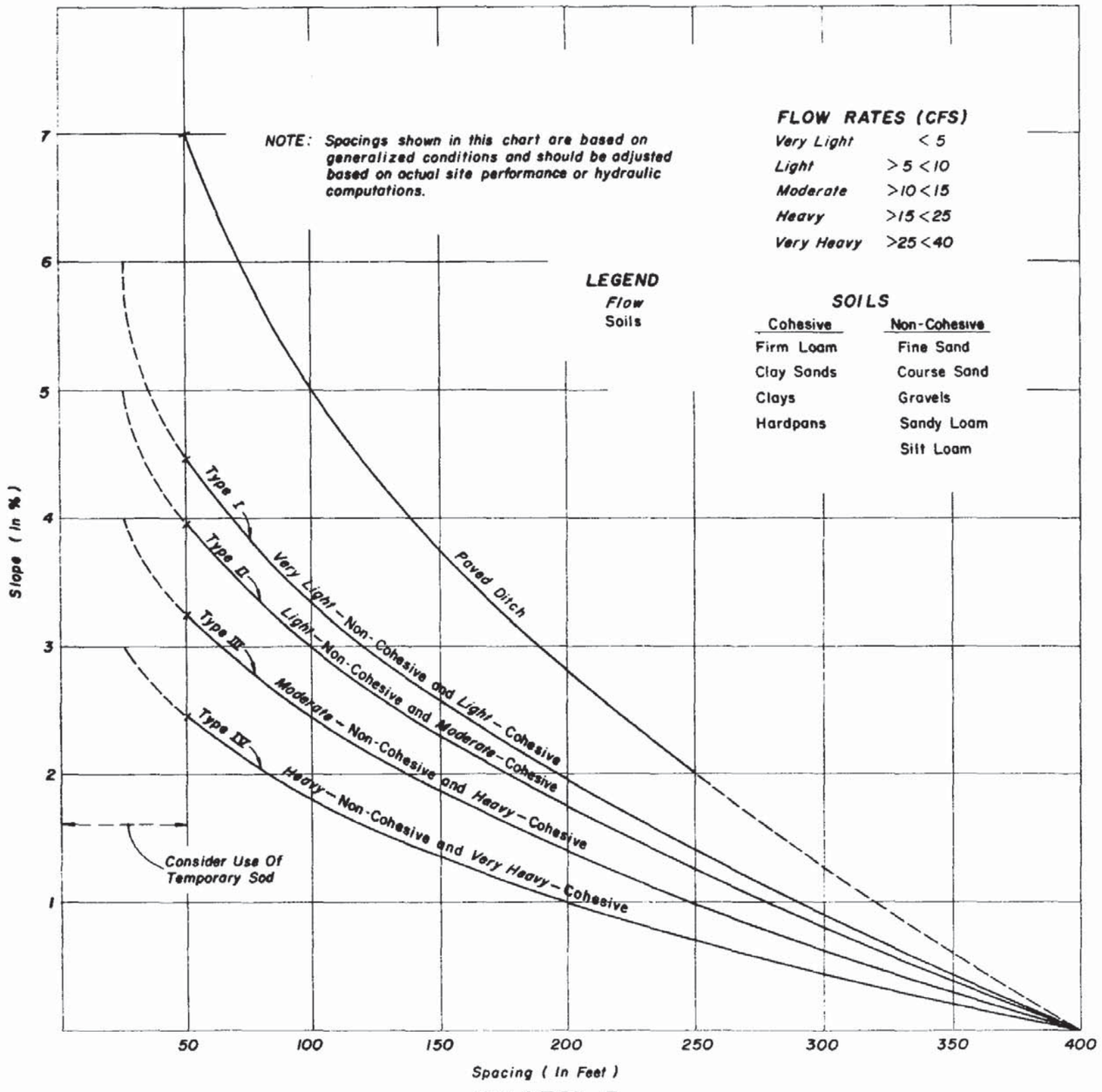

CHART I

RECOMMENDED SPACING FOR TYPE I AND TYPE II HAY BALE BARRIERS, TYPE III AND TYPE IV SILT FENCES AND PAVED DITCH HAY BALE BARRIERS

STATE OF FLORIDA DEPARTMENT OF TRANSPORTATION
ROAD DESIGN

BALED HAY OR STRAW BARRIERS AND SILT FENCES

	Names	Dates
Designed by	EGR	2/80
Drawn by	HSD	9/82
Checked by	JVG	9/82
F.H.W.A. Approved: 9/23/82		

Approved By
State Design Engineer, Roadways

Revision No.	Sheet No.	Index No.
86	1 of 3	102

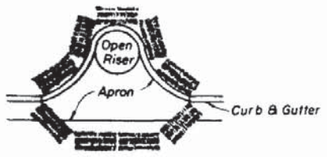

PARTIAL INLET

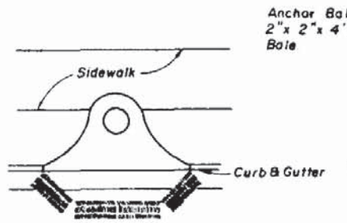

COMPLETED INLET



DITCH BOTTOM INLET

PROTECTION AROUND INLETS OR SIMILAR STRUCTURES

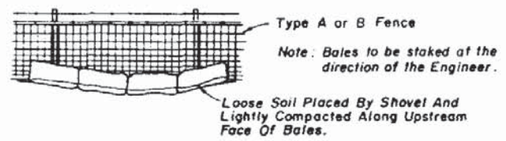

BALES BACKED BY FENCE

DITCH INSTALLATIONS AT DRAINAGE STRUCTURES

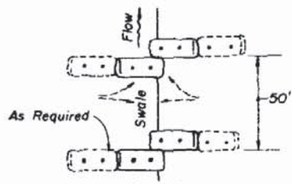

PLAN

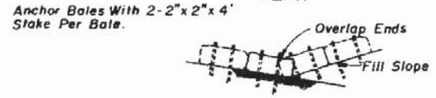

ELEVATION

TO BE USED AT SELECTED SITES WHERE THE NATURAL GROUND SLOPES TOWARD THE TOE OF SLOPE

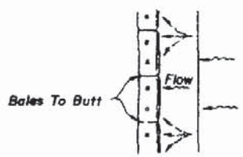

PLAN

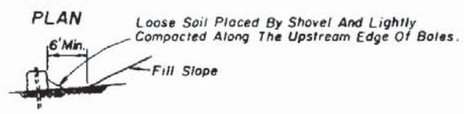

ELEVATION

TO BE USED AT SELECTED SITES WHERE THE NATURAL GROUND SLOPES AWAY FROM THE TOE OF THE SLOPE

BARRIERS FOR FILL SLOPES

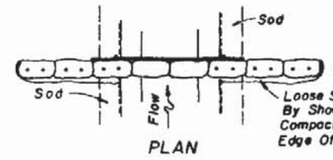

PLAN

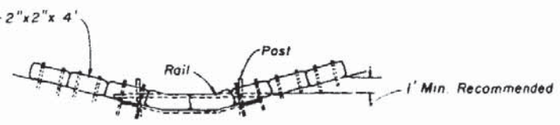

ELEVATION

Spacing: Bale barriers for paved ditches should be spaced in accordance with Chart I, Sheet 1 of 3, Index No. 102.

BARRIER FOR PAVED DITCH

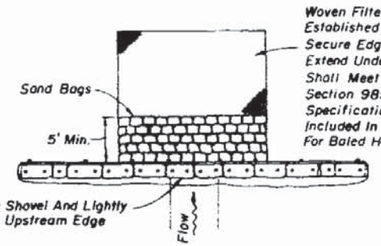

PLAN

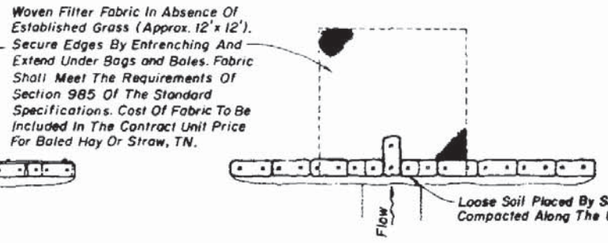

PLAN

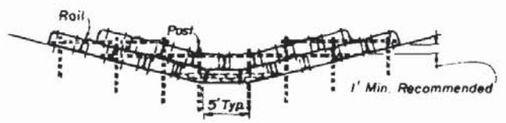

Anchor Lower Bales With 2-2"x 2"x 4' Stakes Per Bale.
Anchor Top Bales To Lower Bales With 2-2"x 2"x 4' Stakes Per Bale.

ELEVATION

TYPE II

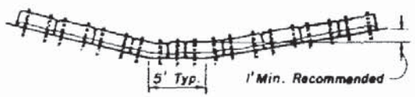

Anchor Bales With 2-2"x 2"x 4' Stakes Per Bale

ELEVATION

TYPE I

Application and Spacing: The use of Types I & II bale barriers should be limited to the conditions outlined in Chart I, Sheet 1 of 3, Index No. 102.

BARRIER FOR UNPAVED DITCHES

STATE OF FLORIDA DEPARTMENT OF TRANSPORTATION
ROAD DESIGN

BALED HAY OR STRAW BARRIERS AND SILT FENCES

	Names	Dates
Designed by	WJR	5/74
Drawn by		
Checked by	HLB	6/74
F. H. W. A. Approved: 10/7/80		

Approved By
Deputy Design Engineer, Roadways

Revision No.	Sheet No.	Index No.
86	2 of 3	102

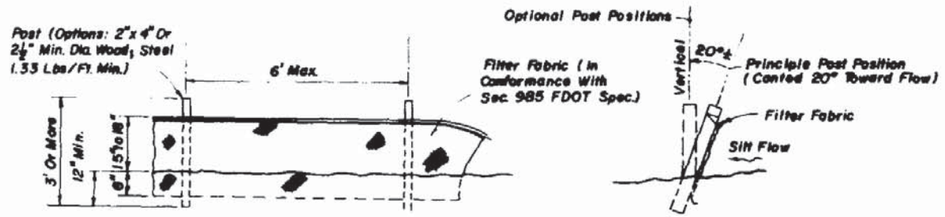

ELEVATION

SECTION

TYPE III SILT FENCE

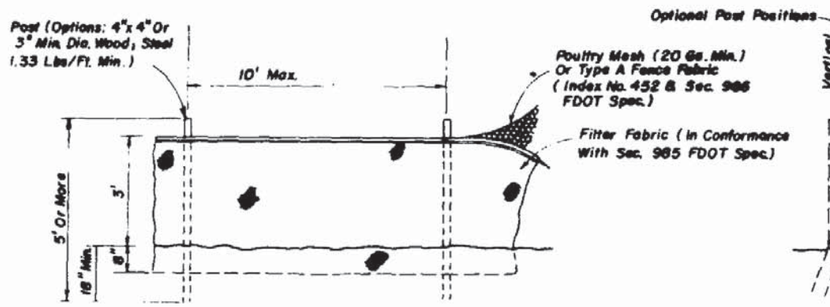

ELEVATION

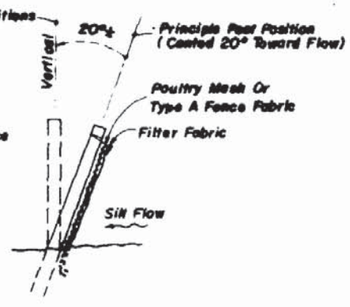

SECTION

Note: Silt Fence to be paid for under the contract unit price for Staked Silt Fence (LF)

TYPE IV SILT FENCE

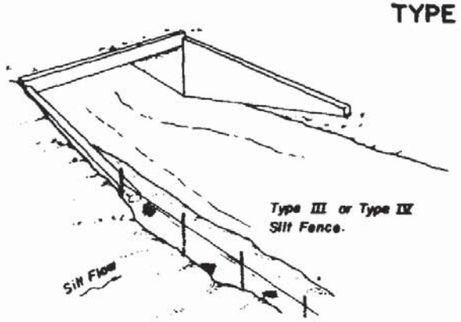

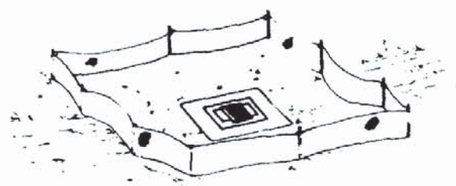

Type III or Type IV Silt Fence Protection Around Ditch Bottom Inlets.

SILT FENCE APPLICATIONS

Do not deploy in a manner that silt fences will act as a dam across permanent flowing watercourses. Silt fences are to be used at upland locations and turbidity barriers used in permanent bodies of water.

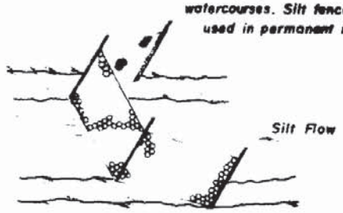

Type IV Silt Fence



Type III Silt Fence

Note: Spacing for Type III and Type IV Fences to be in accordance with Chart I, Sheet 1 of 3 and ditch installations at drainage structures Sheet 2 of 3.

STATE OF FLORIDA DEPARTMENT OF TRANSPORTATION
ROAD DESIGN

BALED HAY OR STRAW BARRIERS AND SILT FENCES

	Names	Dates
Designed by	RAA/CM	9/85
Drawn by	LRE	9/85
Checked by	RAA	10/85

Approved By: Deputy Design Engineer, Roadways

F.H.W.A. Approved:

Revision No	Sheet No.	Index No.
86	3 of 3	102

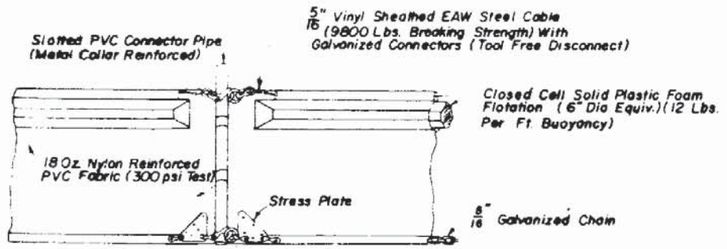

TYPE I

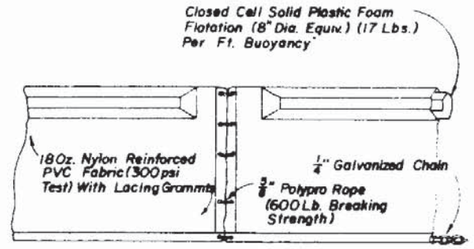

TYPE II

FLOATING TURBIDITY BARRIERS

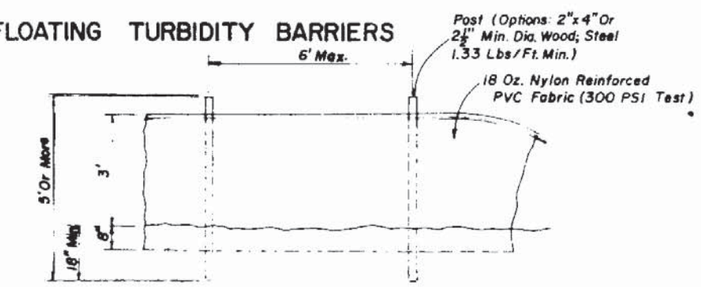

STAKED TURBIDITY BARRIER

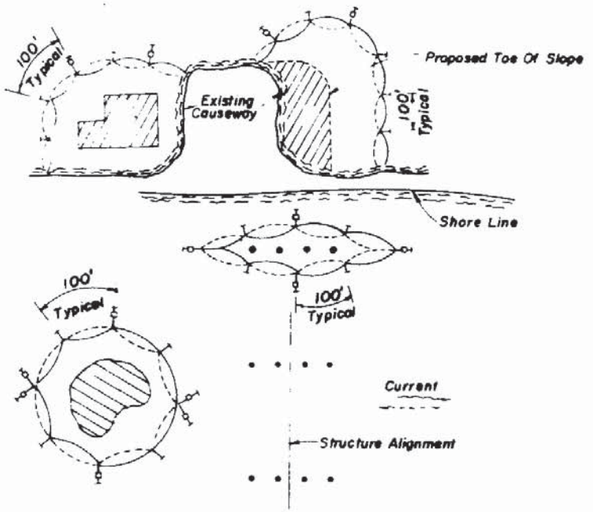

LEGEND

- Pile Locations
- Dredge Or Fill Area
- Mooring Buoy w/Anchor
- Anchor
- Barrier Movement Due To Current Action

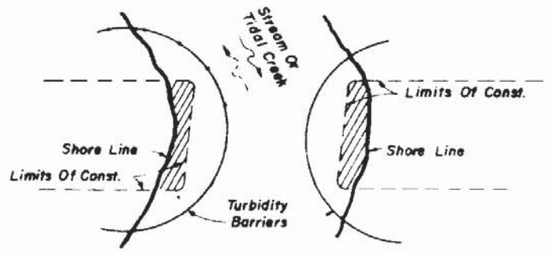

NOTES:

1. Turbidity barriers are to be used in all permanent bodies of water regardless of water depth.
2. Number and spacing of anchors dependent on current velocities.
3. Deployment of barrier around pile locations may vary to accomodate construction operations.
4. Navigation may require segmenting barrier during construction operations.
5. The above applications indicate Type I Floating Turbidity Barrier since anchors are shown, however, if conditions warrant, Type II Floating Turbidity Barrier may be used. For additional information see Standard Specifications.

Note:
Turbidity barriers for flowing streams and tidal creeks may be either floating, or staked types or any combinations of types that will suit site conditions and meet erosion control and water quality requirements. The barrier type(s) will be at the Contractors option unless otherwise specified in the plans, however payment will be under the pay item (s) established in the plans for Floating Turbidity Barrier and/or Staked Turbidity Barrier. Posts in staked turbidity barriers to be installed in vertical position unless otherwise directed by the Engineer.

TURBIDITY BARRIER APPLICATIONS

STATE OF FLORIDA DEPARTMENT OF TRANSPORTATION
ROAD DESIGN

TURBIDITY BARRIERS

	Names	Dates
Designed by	RAA/CJA	9/85
Drawn by	LRE	9/85
Checked by	RAA	10/85
F.H.W.A.	Approved	

Approved By: Deputy Design Engineer, Roadways

Revision No.	Sheet No.	Index No.
86	1 of 1	103

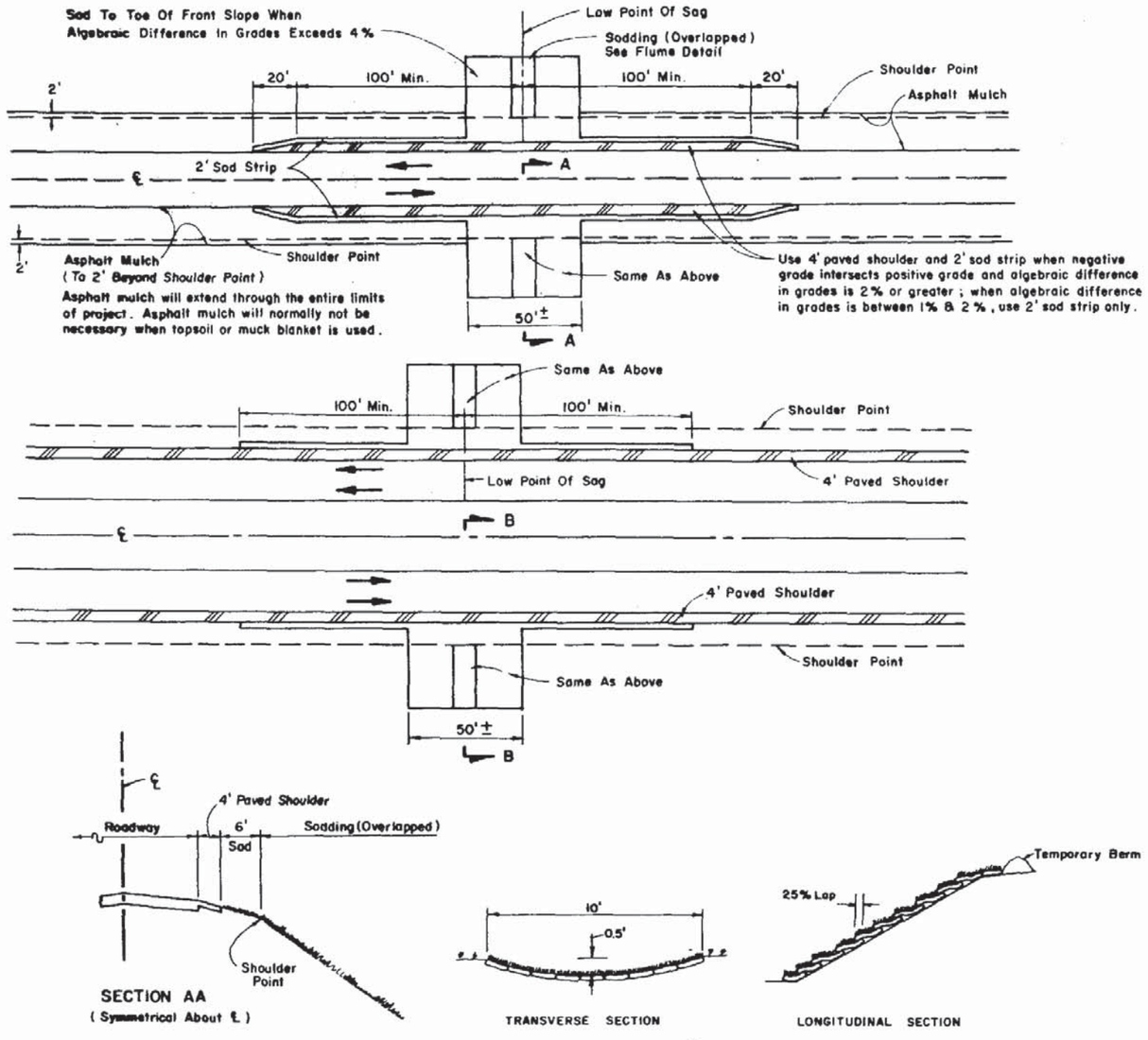

OVERLAPPED SOD FLUME

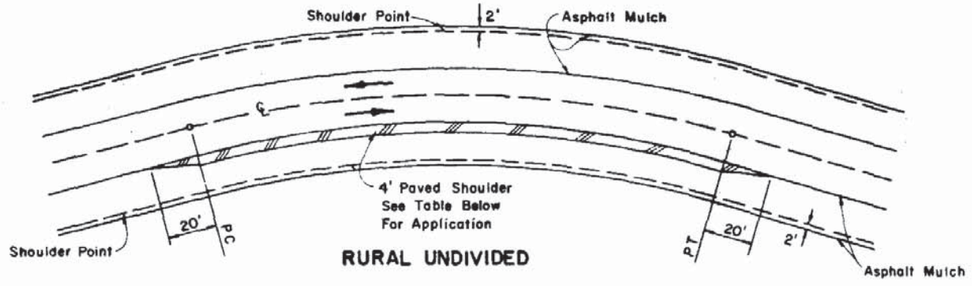

RURAL UNDIVIDED

CRITERIA FOR PAVING SHOULDER ON DIVIDED AND UNDIVIDED FACILITIES	
Design Speed	Degree Of Curve
30	7° or greater
40	5° or greater
50	4° or greater
60	3° or greater
65	3° or greater
70	2° or greater

Note: Paved shoulders are required on all curves meeting the criteria tabulated above. For curves not meeting the criteria, shoulders are to be paved where erosion of the shoulder is evident or anticipated.

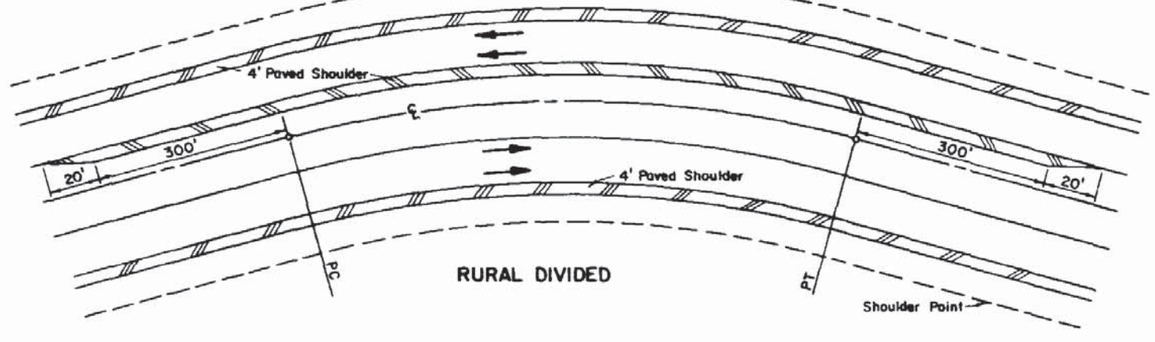

RURAL DIVIDED

SHOULDER AND SLOPE TREATMENT FOR SUPERELEVATED ROADWAYS

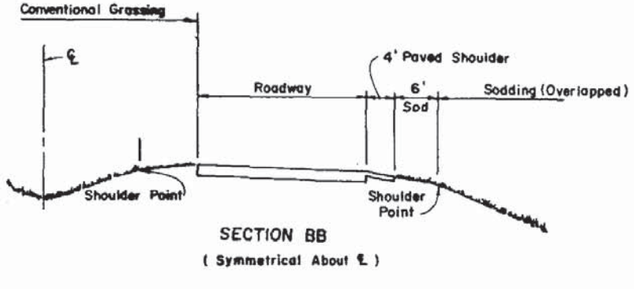

SHOULDER AND SLOPE TREATMENT IN SAG VERTICAL CURVES

GENERAL NOTES

1. Erosion control details are applicable to new construction, reconstruction and RRR projects.
2. For sodding adjacent to ditches and at headwalls, see Index No. 281.
3. All front slopes steeper than 3:1 are to be sodded.

STATE OF FLORIDA DEPARTMENT OF TRANSPORTATION
ROAD DESIGN

EROSION CONTROL DETAILS FOR PERMANENT CONSTRUCTION

	Names	Dates
Designed by	HLG	4/75
Drawn by		
Checked by	DCB	4/75
F.H.W.A. Approved: 10/7/80		

Approved By
Deputy Design Engineer, Roadways

Revision No.	Sheet No.	Index No.
85	1 of 1	104

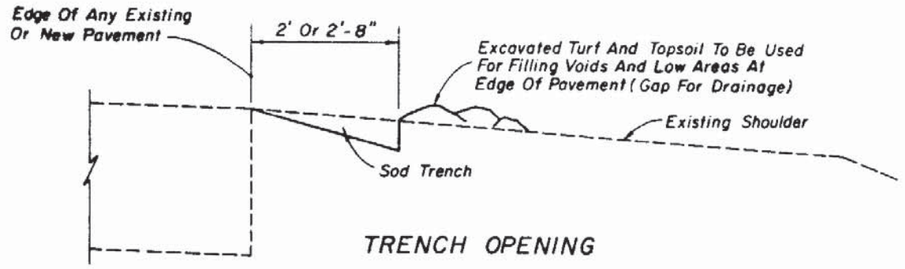

TRENCH OPENING

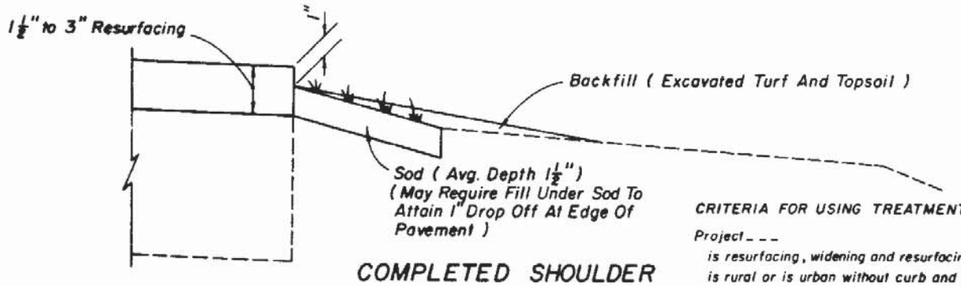

COMPLETED SHOULDER

CRITERIA FOR USING TREATMENT TYPE R-1

Project ___

is resurfacing, widening and resurfacing or construction of shoulder pavement

is rural or is urban without curb and gutter

has good existing soil and turf with no significant shoulder erosion (Isolated areas of significant erosion will require additional special treatment)

resurfacing build-up is 1½" to 3"

TYPE R-1

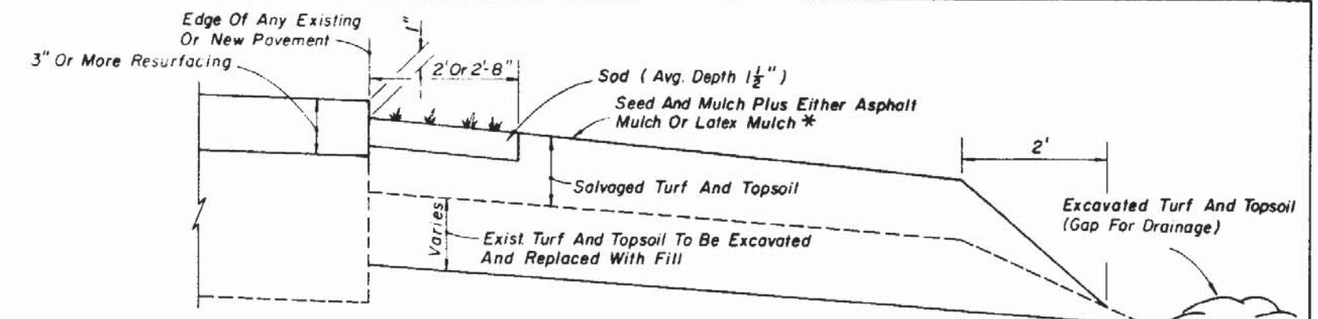

SHOULDER BUILD-UP METHOD

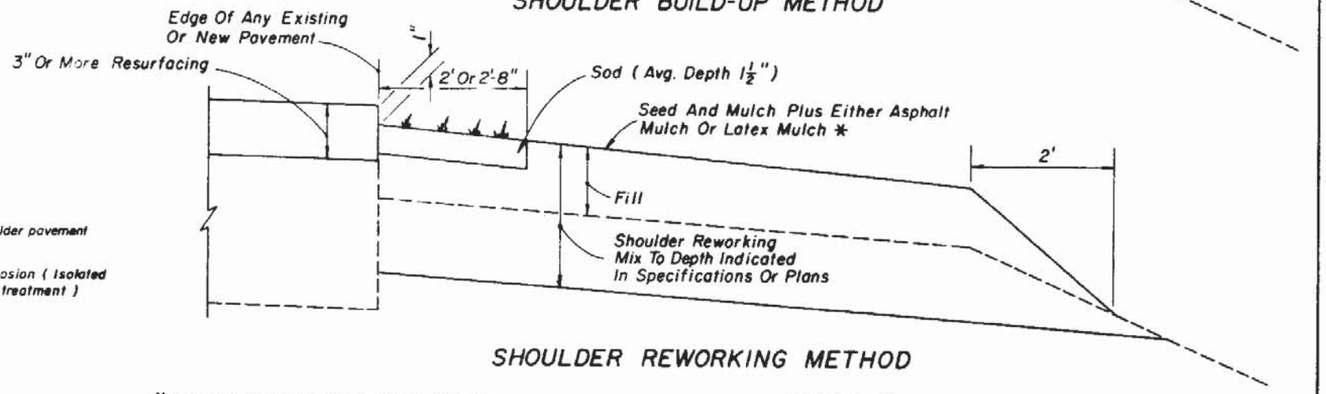

SHOULDER REWORKING METHOD

* Asphalt Mulch Or Latex Mulch May Be Deleted For Low Volume Roadways (ADT Less Than 1600) Or Where Shoulder Pavement Is Constructed.

CRITERIA FOR USING TREATMENT TYPE R-2

Project ___

is resurfacing or construction of shoulder pavement

is rural or is urban without curb and gutter

has good existing soil and turf

resurfacing build-up is 3" or more

A SIMILAR TREATMENT MAY BE USED FOR PROJECTS THAT REQUIRE SHOULDER WIDENING. DETAILS ARE TO BE SHOWN IN THE PLANS.

TYPE R-2

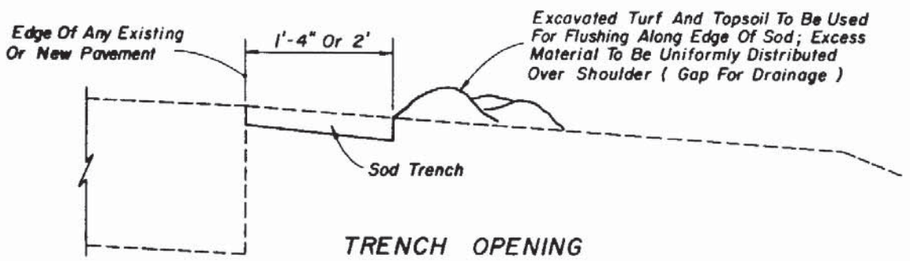

TRENCH OPENING

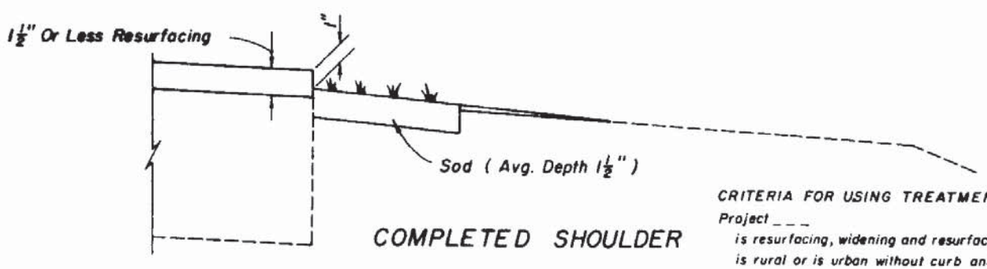

COMPLETED SHOULDER

CRITERIA FOR USING TREATMENT TYPE R-3

Project ___

is resurfacing, widening and resurfacing or construction of shldr. pavt.

is rural or is urban without curb and gutter

has good existing soil and turf with no significant shoulder erosion (Isolated areas of significant erosion will require additional special treatment)

resurfacing build-up is 1½" or less

TYPE R-3

SEEDING RATES (Lbs/Ac)

TYPE OF SEED	ZONE I				ZONE II			
	COASTAL		INLAND		COASTAL		INLAND	
	Mar. to Oct.	Nov. to Mar.	Mar. to Oct.	Oct. to Mar.	Feb. to Nov.	Dec. to Feb.	Feb. to Nov.	Dec. to Feb.
PERMANENT GRASS								
Unhulled Bermuda	15	15	10	15	15	15	10	15
Bahia Argentina Or Pensacola			30	30			30	30
QUICK GROWING								
Brown Top Millet	20		20		20		20	
Annual Rye Grass		20		20		20		20
TOTAL POUNDS PER ACRE	35	35	60	65	35	35	60	65

Note: The seeding rates shown in this table apply only when seed is spread by an approved mechanical spreader meeting the requirements of Section 570 and 577 of the Standard Specifications.

GENERAL NOTES

1. Special attention is to be directed to the construction of the required 1" drop-off at edge of pavement.
2. Fertilize entire unpaved shoulder and front slope to toe of slope or bottom of ditch.
3. Topsoil obtained from borrow pits or other sources may be used in lieu of excavated turf and topsoil when economically feasible. No additional payment will be made for substituting topsoil for excavated turf or topsoil.
4. Payment for excavation of turf and topsoil and for backfill of this material (Details R-1 and R-3) is to be included in the contract unit price for Sodding, SY.

STATE OF FLORIDA DEPARTMENT OF TRANSPORTATION
ROAD DESIGN

SHOULDER SODDING AND REWORKING ON EXISTING FACILITIES

	Names	Dates
Designed by	EGR	9/7/84
Drawn by	HSD	9/7/84
Checked by	EGR	9/7/84
F.H.W.A. Approved:		9/21/84

Approved By
State Design Engineer, Roadways

Revision No.	Sheet No.	Index No.
85	1 of 1	105

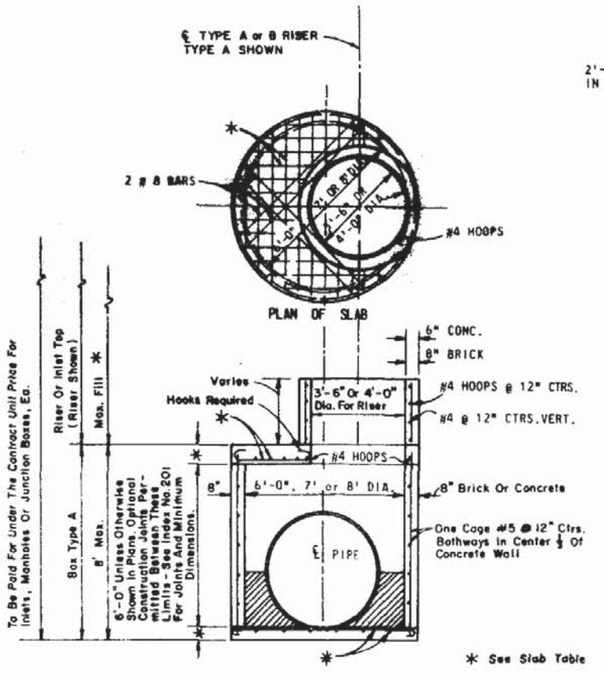

ALTERNATE A

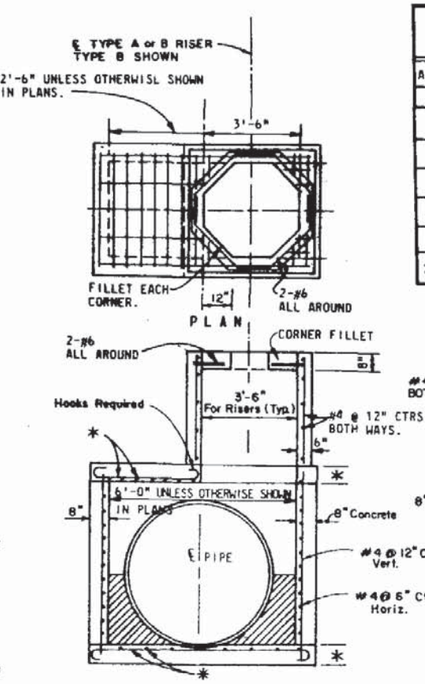

TOP AND FLOOR SLAB TABLE TYPE J					
ALT. A I.D.	ALT. B BOX WIDTH	SLAB THICKNESS	ALLOWABLE FILL OVER TOP SLAB MIN.	ALLOWABLE FILL OVER TOP SLAB MAX.	REINFORCING TOP & FLOOR SLABS
	3'-6"	8"	2'	29'	#6 @ 6" CTRS. B.W.
	5'-0"	8"	2'	25'	#6 @ 6" CTRS. B.W.
	5'-0"	10"	2'	27'	#7 @ 6" CTRS. B.W.
6'	6'-0"	8"	2'	20'	#6 @ 6" CTRS. B.W.
6'	6'-0"	10"	2'	25'	#7 @ 6" CTRS. B.W.
7' or 8'	8'-0"	10"	2'	11'	#7 @ 6" CTRS. B.W.

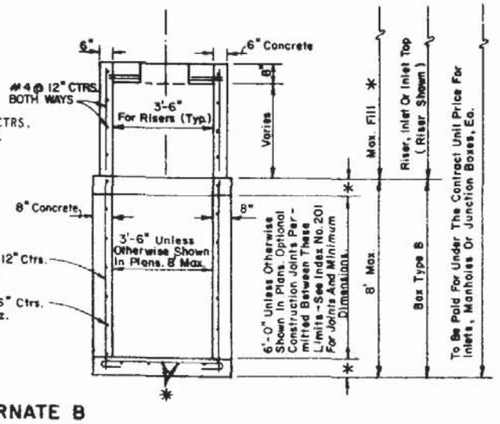

ALTERNATE B

TYPE J

FOR INLETS, MANHOLES AND JUNCTION BOXES

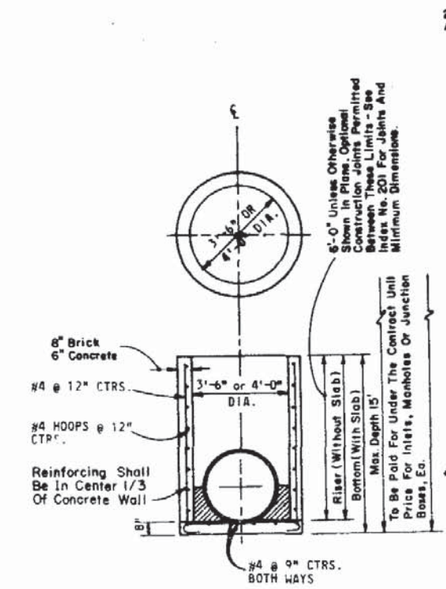

ALTERNATE A

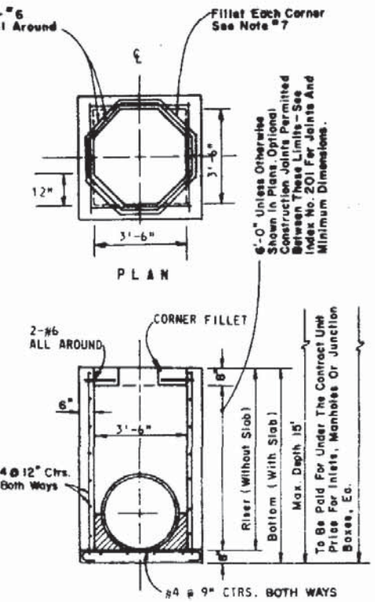

ALTERNATE B

TYPE P

FOR INLETS, MANHOLES AND JUNCTION BOXES

GENERAL NOTES

1. WALLS OF CIRCULAR STRUCTURES (ALTERNATE A) MAY BE CONSTRUCTED OF CONCRETE OR BRICK, BUT RECTANGULAR STRUCTURES (ALTERNATE B) SHALL BE CONSTRUCTED OF CONCRETE ONLY. THE CONCRETE MAY BE CAST-IN-PLACE OR PRECAST.
2. WALL REINFORCEMENT AND THICKNESS ARE FOR EITHER CAST-IN-PLACE OR PRECAST CONCRETE UNITS EXCEPT THAT THE MANUFACTURER MAY FURNISH PRECAST CIRCULAR UNITS IN ACCORDANCE WITH A.S.T.M. SPECIFICATION C-478 UP TO 96" IN DIA. OR PRECAST CIRCULAR UNITS A.S.T.M. SPECIFICATION C-76, TABLE III, FOR B WALL CONCRETE PIPE. TOP AND FLOOR SLAB THICKNESS AND REINFORCEMENT ARE FOR ALL TYPES OF CONSTRUCTION.
3. ELLIPTICAL STEEL, ASTM SPECIFICATION C-76, TABLE III, B WALL, IS MODIFIED TO USE A CIRCULAR CAGE OF STEEL AREA EQUAL TO THAT OF THE ELLIPTICAL CAGE AND PLACED IN THE CENTER ONE-THIRD OF THE WALL. THIS MODIFICATION IS FOR PRECAST CIRCULAR UNITS PRODUCED IN ACCORDANCE WITH ASTM C-76.
4. TOP AND FLOOR SLABS FOR TYPE J UNITS SHALL BE OF CLASS II CONCRETE. CONCRETE AS SPECIFIED IN ASTM C-478 (4000 psi) MAY BE USED IN LIEU OF CLASS I AND CLASS II CONCRETE IN PRECAST ITEMS MANUFACTURED IN PLANTS WHICH ARE UNDER THE STANDARD OPERATING PROCEDURES FOR THE INSPECTION OF PRECAST DRAINAGE PRODUCTS.
5. STRUCTURE BOTTOMS TYPES J AND P MAY BE USED IN CONJUNCTION WITH CURB INLET TOPS TYPES 1, 2, 3, 4, 5, 6, 9, AND 10, AND ANY MANHOLE OR JUNCTION BOX UNLESS OTHERWISE SHOWN IN THE PLANS OR OTHER STANDARD DRAWINGS. STRUCTURE BOTTOMS TYPE J, ALT B MAY BE USED IN CONJUNCTION WITH CURB INLET TYPES 7 & 8, ANY DITCH BOTTOM INLET UNLESS OTHERWISE SHOWN IN THE PLANS OR OTHER STANDARD DRAWINGS.
6. RECTANGULAR STRUCTURES MAY BE ROTATED AS DIRECTED BY THE ENGINEER IN ORDER TO FACILITATE CONNECTIONS BETWEEN THE STRUCTURE WALLS AND STORM SEWER PIPES.
7. EMBEDMENT HOOKS IN THE TOP AND BOTTOM SLABS MAY BE REPLACED WITH STRAIGHT EMBEDMENTS IN ACCORDANCE WITH THE REINFORCEMENT DETAIL SHOWN UNDER OPTIONAL CONSTRUCTION JOINTS, INDEX NO. 201, SHEET 3 OF 3.
8. ALL STEEL BARS SHALL HAVE 1½" MINIMUM COVER UNLESS OTHERWISE SHOWN. HORIZONTAL STEEL IN RECTANGULAR STRUCTURES SHALL BE LAPPED A MINIMUM OF 24 BAR DIAMETERS AT CORNERS.

THE CORNER FILLETS SHOWN ARE NECESSARY FOR RECTANGULAR STRUCTURES USED WITH CIRCULAR RISERS AND INLET THROATS AND USED ON SKEW WITH RECTANGULAR RISERS, INLETS AND INLET THROATS. FILLETS WILL BE REQUIRED IN THE LOWER END OF THE ALT. B RISER WHEN USED WITH THE ALT. A BOX.

10. INLET THROATS, RISERS OR MANHOLE TOPS SHALL BE SECURED TO STRUCTURES AS SHOWN ON INDEX NO. 201.
11. STRUCTURES WITH DEPTHS OVER 14' ARE TO BE CHECKED FOR FLOATATION BY DESIGNER OF PROJECT DRAINAGE.
12. LARGER THAN SPECIFIED STANDARD UNITS MAY BE SUBSTITUTED AT THE CONTRACTOR'S OPTION WHEN THESE UNITS WILL NOT CAUSE OR INCREASE THE SEVERITY OF UTILITY CONFLICTS. SUCH LARGER UNITS SHALL BE FURNISHED AT NO ADDITIONAL COST TO THE DEPARTMENT. LARGER ALTERNATE A UNITS CANNOT REPLACE ALTERNATE B UNITS WITHOUT APPROVAL OF THE ENGINEER THIS NOTE APPLIES TO THE INDEX ONLY.
13. FOR MANHOLE AND JUNCTION BOX TOPS, FOR FRAMES AND COVERS, AND, FOR SUPPLEMENTARY DETAILS SEE INDEX NO. 201.

STRUCTURE BOTTOMS TYPES J AND P

RECOMMENDED BY: J. C. Hallock
County Design Engineer, Roadways

DATE REVISED	Revision No.	Sheet No.	Index No.
5/1/75	85	1 of 1	200

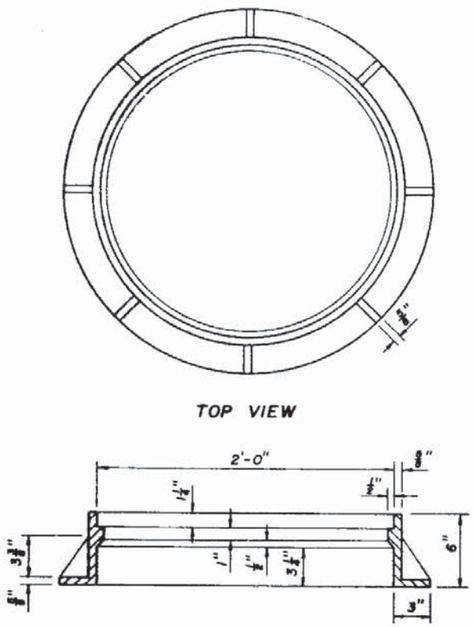

TYPE I
For Manholes

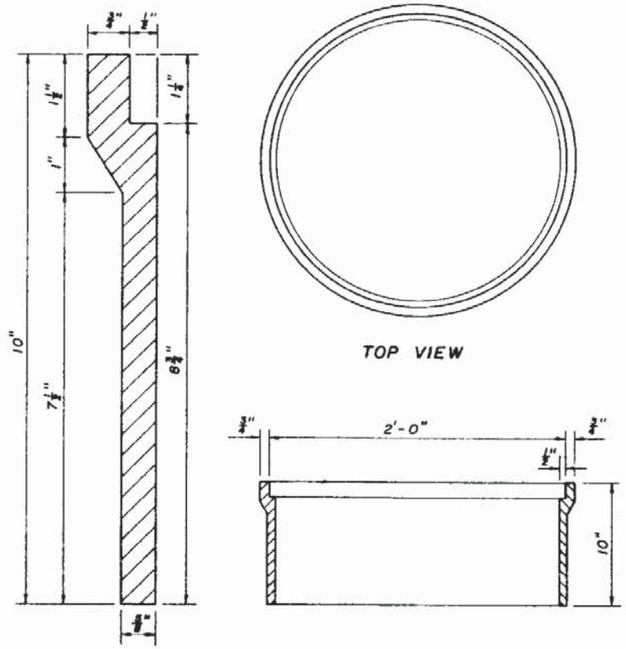

TYPE II
For Curb Inlets Types 1, 2, 3, & 4

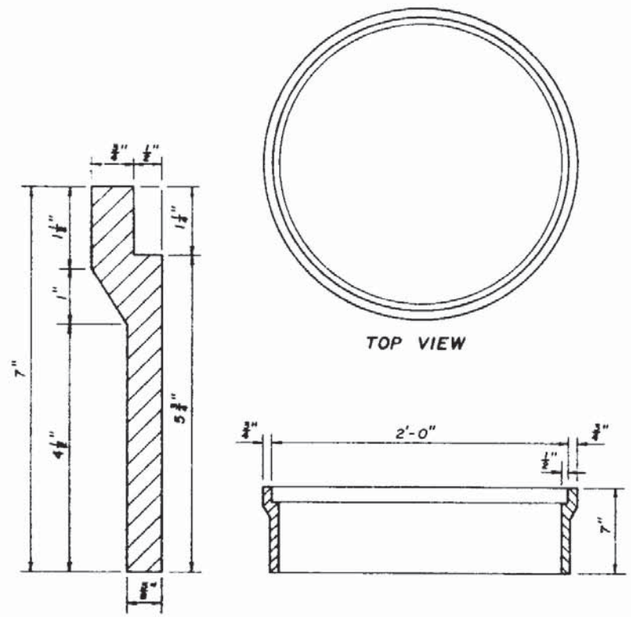

TYPE III
For Curb Inlets Types 7 & 8

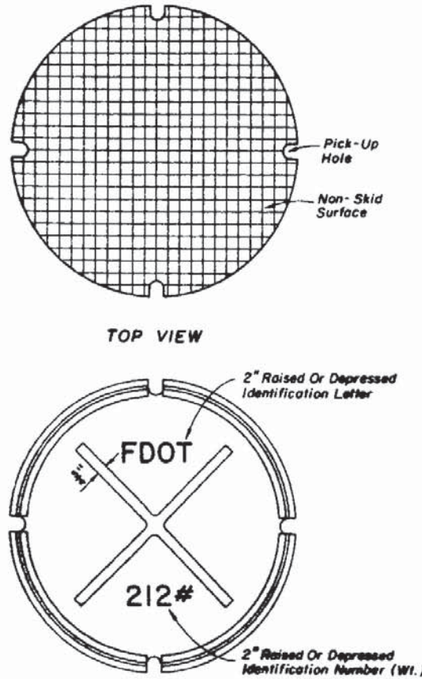

CAST IRON FRAMES

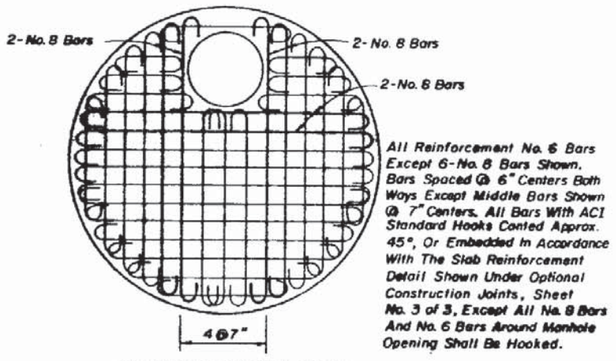

All Reinforcement No. 6 Bars Except 6-No. 8 Bars Shown. Bars Spaced @ 6" Centers Both Ways Except Middle Bars Shown @ 7" Centers. All Bars With ACI Standard Hooks Canted Approx. 45°, Or Embedded In Accordance With The Slab Reinforcement Detail Shown Under Optional Construction Joints, Sheet No. 3 of 3, Except All No. 8 Bars And No. 6 Bars Around Manhole Opening Shall Be Hooked.

REINFORCEMENT PLAN

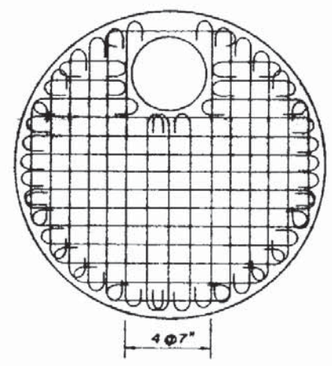

REINFORCEMENT PLAN

Reinforcing Bars @ 6" Centers Both Ways Except Middle Bars Shown @ 7" Centers. All Bars With ACI Standard Hooks Canted Approx. 45°, Or Embedded In Accordance With The Slab Reinforcement Detail Shown Under Optional Construction Joints, Sheet No. 3 of 3, Except Bars Around Manhole Opening Shall Be Hooked.

Bar Size	Top Diameter
No. 4	3'-6" & 4'
No. 5	6'
No. 6	7'

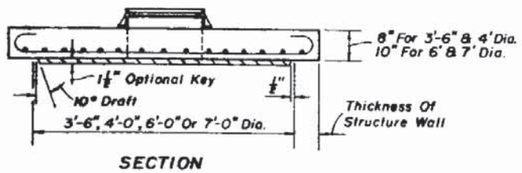

TYPE 7-T (TRAFFIC) (H-20)

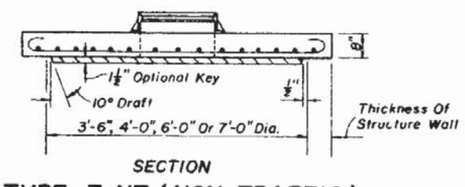

TYPE 7-NT (NON-TRAFFIC)

MANHOLES OR JUNCTION BOXES

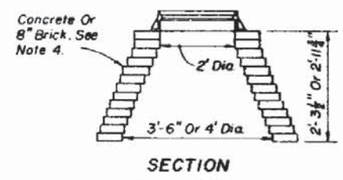

TYPE 8

MANHOLES

STRUCTURE TOPS

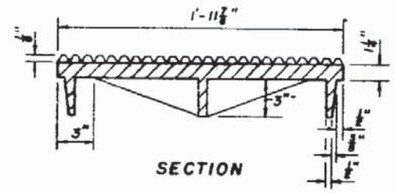

COVER FOR ALL FRAMES

NOTES (TOPS, FRAMES AND COVER):

1. All steel bars shall have 1¼" minimum cover unless otherwise shown and shall be hooked where indicated.
2. Manhole top Type 7 slabs shall be of Class II concrete. Concrete as specified in ASTM C-478 may be used for precast units; see General Note No. 2.
3. Manhole top Type 7 slabs may be of cast-in-place or precast construction. The optional key is for precast tops and in lieu of dowels. Frame and slab openings are to be omitted when top is used over a junction box. Frames can be adjusted with from one to six courses of brick.
4. Manhole top Type 8 may be of cast-in-place or precast concrete construction or brick construction. For concrete construction, the concrete and steel reinforcement shall be the same as the supporting wall unit. An eccentric cone may be used.
5. Manhole tops shall be secured to structures by optional construction joints as shown on Sheet 3 of 3.
6. All covers to be tack welded to frames at third points or grouted at third points with epoxy (total eleven (11) ounces of mixed epoxy).
7. The 212 lb. cover is the replacement for all previous 1¼" deep frames (traffic type). The 185 lb. cover is the replacement for all previous ½" deep frames (non-traffic type).

WEIGHT OF CASTINGS	
Type I	126 Lbs.
Type II	134 Lbs.
Type III	98 Lbs.
Cover	212 Lbs.

STATE OF FLORIDA DEPARTMENT OF TRANSPORTATION
ROAD DESIGN

SUPPLEMENTARY DETAILS FOR MANHOLES AND INLETS

	Names	Dates	Approved By
Designed by			State Design Engineer, Roadways
Drawn by	HSD	6/82	
Checked by	JBW	6/82	
F.H.W.A. Approved: 9/23/82			Revision No. 86 · Sheet No. 1 of 3 · Index No. 201

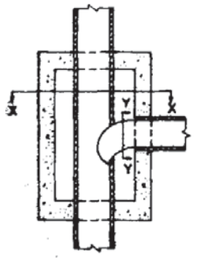

PLAN ON PIPE ℄

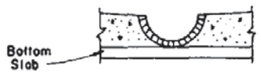

SECTION XX

Channel to be formed with either half-pipe and mortar or brick and mortar.



SECTION YY

BOTTOM CONSTRUCTION WHEN INLET SERVES AS MANHOLE

GENERAL NOTE:
Mortar used to seal the pipe into the walls of precast units will be of such a mix that shrinkage will not cause leakage into or out of the units.

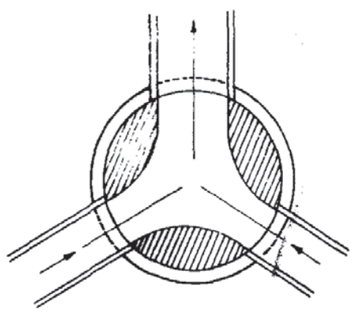

PLAN

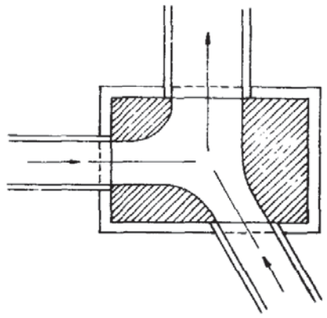

PLAN

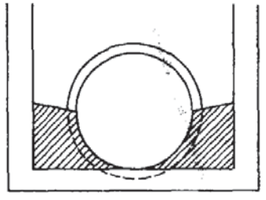

SECTION

CHANNELIZATION

Channelization required at all drainage structures with two or more pipes.

Smooth flow channels composed of concrete, or brick and mortar shall be constructed in the bottoms of all structures to a depth equal to half the diameter of the largest pipe.

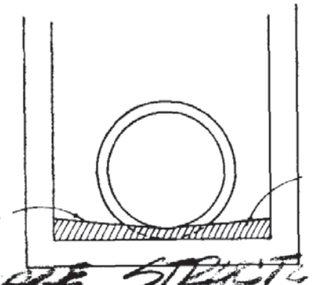

ALTERNATE LOCATION OF PIPE IN STRUCTURE WHEN PREFABRICATED FLOOR SLAB IS USED

COMPLETE FLOW CHANNEL IS REQUIRED WHEN THERE IS FLOW THROUGH THE STRUCTURE

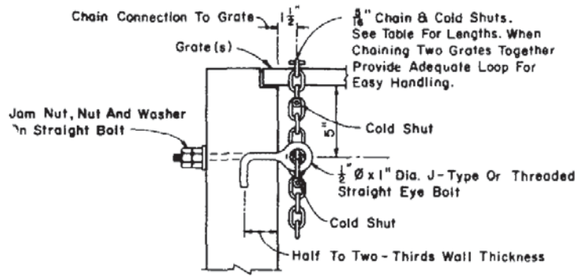

Note: When Alternate G grate is specified, the chain, bolt, nuts, washer and cold shuts shall be galvanized in accordance with the specifications for the grate.

Cost of eye bolt and chain to be included in the contract unit price for inlets.

EYE BOLT AND CHAIN REQUIREMENTS

Index Number	Inlet Type	Eye Bolts	Length Of Chain	Handling & Remarks
217	(MB) 1	1	4'-0"	Slide & Spin
	(MB) 2	1	4'-0"	Slide & Spin
	(MB) 3	2	2@4'-0"	Slide & Spin
	(MB) 4	2	2@4'-0"	Slide & Spin
	(MB) 5	2	2@4'-0"	Slide & Spin
220	S	1	4'-0"	Slide & Spin
221	V	1	4'-0"	Slide & Spin
230	A	1	3'-0"	Slide
231	B	1	5'-0"	Slide & Spin
232	C	1	2'-6"	Slide & Spin
	D	1	2'-6"	Slide & Spin
	E	2	2@2'-6"	Slide & Spin
	H	2	2@2'-6"	Flip Ctr. Grate and Slide & Spin Single Free Grate
			1@1'-6"	Ctr. Grate To One End Grate
233	F	1	3'-6"	Flip Or Slide & Spin
	G	1	6'-0"	Slide
			2'-0"	Lifting Loop
234	J	1	4'-0"	Slide & Spin
218	B W	1	3'-8"	Slide Or Slide & Spin

EYE BOLT AND CHAIN FOR LOCKING GRATES TO INLETS

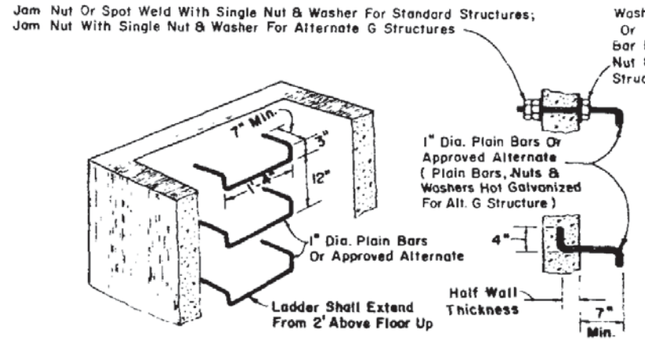

PICTORIAL VIEW

OPTIONAL BAR TYPES

Note: Ladder bars are required only when called for in the plans.

Other types of ladder bars appearing on the Departments "Qualified Products List" may be used. Installation shall be in accordance with the ladder bar manufacturers recommendations.

LADDER BARS FOR STRUCTURES OVER 10' IN DEPTH

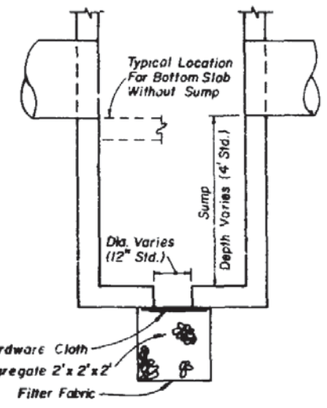

Note: Sump bottom appropriate for all manhole and inlet types

SUMP BOTTOM

STATE OF FLORIDA DEPARTMENT OF TRANSPORTATION
ROAD DESIGN

SUPPLEMENTARY DETAILS FOR MANHOLES AND INLETS

	Name	Date
Designed by	HLB	4/75
Drawn by		
Checked by	LMF	4/75
F.H.W.A. Approved		10/7/80

Approved By _____ Deputy Design Engineer, Roadways

Revision No.	Sheet No.	Index No.
86	2 of 3	201

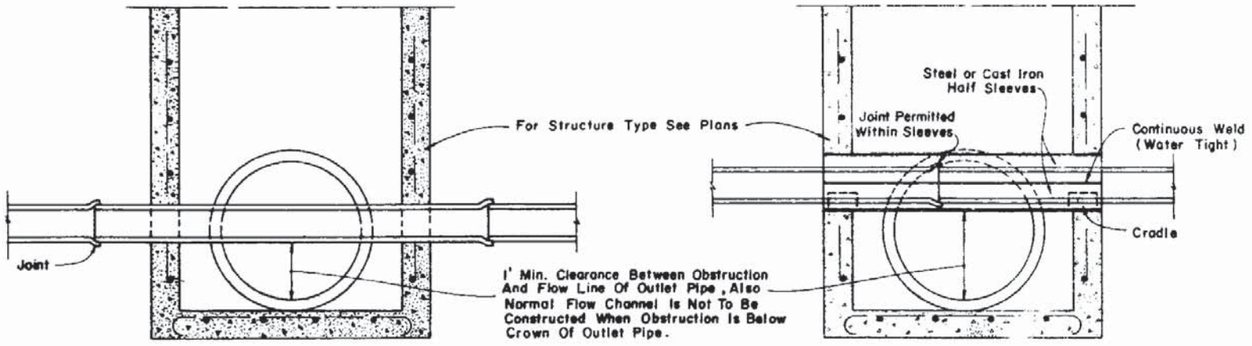

CONDITION I

CONDITION II

NOTE:
1. No joints allowed inside the Condition I structure.
2. Only cast iron or steel water mains will be allowed to pass directly through structure.
3. Only cast iron sanitary sewer will be allowed to pass directly through structure.

NOTE:
1. Only water mains will be allowed to pass through a Condition II structure.

DESIGNERS NOTE: "Sumped" conflict manholes shall not be used unless the system is hydraulically designed to take in account the headloss generated if the sump is completely blocked. "Sumped" conflict manholes must be larger than those normally provided.

UTILITY PIPES THRU STORM SEWER STRUCTURES

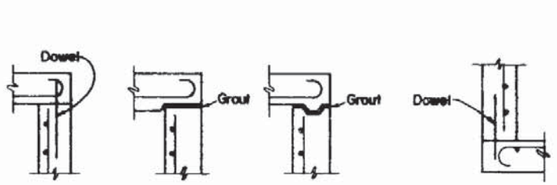

TOP SLABS TO WALLS

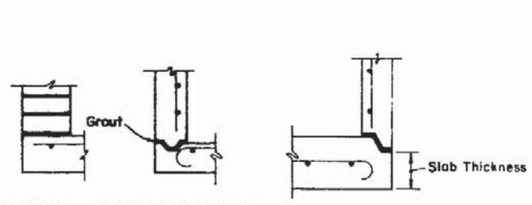

BOTTOM SLABS TO WALLS

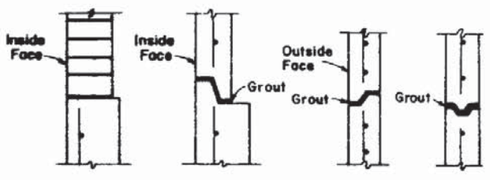

WALL JOINTS

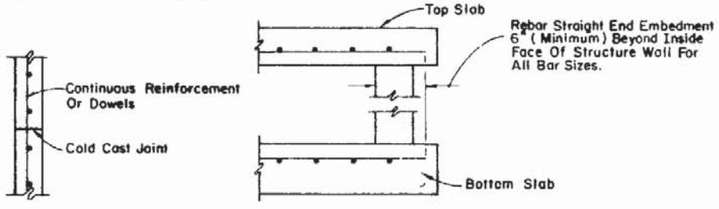

REBAR STRAIGHT END EMBEDMENT IN LIEU OF ACI STANDARD HOOKS FOR TOP AND BOTTOM SLABS

OPTIONAL CONSTRUCTION JOINTS

1. One or more types of joints may be used in a single structure, except brick wall structure. Brick wall construction is permitted on circular units only.
2. All grouted joints are to have a maximum thickness of 1".
3. Keyways are to be a minimum of 1 1/2" deep.
4. Joint dowels are to be #4 bars, 12" long with a minimum of 6 bars per joint for circular structures approximately evenly spaced, and, 2 bars per side at approximate quarter points for rectangular structures.
5. Minimum cover on reinforcing bars is 1 1/4"
6. Rebar straight end embankment may be used in lieu of ACI standard hooks for top and bottom slabs except when hooks are specifically called for in plans or standard drawings.
7. Joints between wall segments and between wall segments and top or bottom slabs may be sealed either by preformed plastic gasket material using the procedures given in Section 430-7.3 or by grout.
8. Approved product inserts may be used in lieu of dowel embedment.

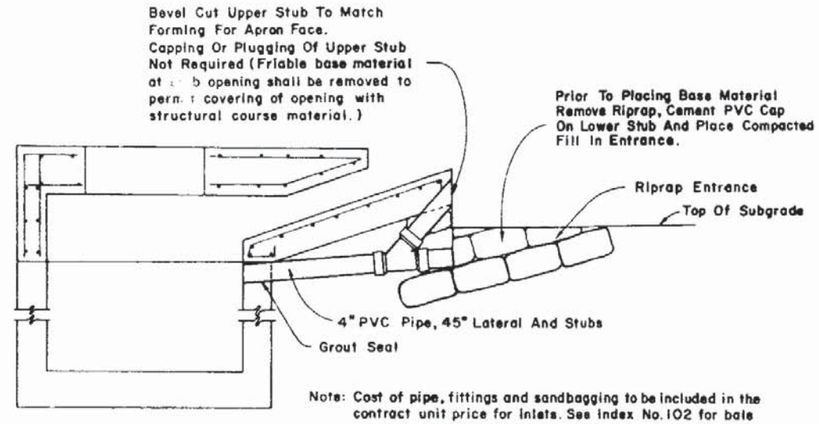

Note: Cost of pipe, fittings and sandbagging to be included in the contract unit price for inlets. See Index No. 102 for bale barrier protection at inlet.

TEMPORARY DRAINS FOR SUBGRADE AND BASE

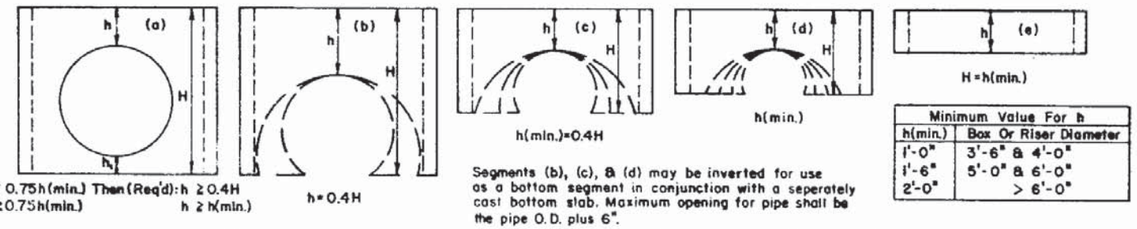

Minimum Value For h	
h(min.)	Box Or Riser Diameter
1'-0"	3'-6" & 4'-0"
1'-6"	5'-0" & 6'-0"
2'-0"	> 6'-0"

Segments (b), (c), & (d) may be inverted for use as a bottom segment in conjunction with a seperately cast bottom slab. Maximum opening for pipe shall be the pipe O.D. plus 6".

TOP OR BOTTOM SEGMENTS WITH CONSTRUCTION JOINTS OTHER THAN DOWEL OPTION

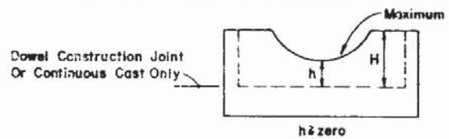

(Minimums Tabulated Above Do Not Apply)

TOP OR BOTTOM SEGMENT FOR DOWEL CONSTRUCTION JOINTS OR CONTINUOUS CAST SEGMENTS

COMPARATIVE SIDE VIEWS

MINIMUM DIMENSIONS FOR BOX AND RISER SEGMENTS

GENERAL NOTES

1. For square or rectangular precast drainage structures either deformed or smooth welded wire fabric may be used based on substitution of equal steel areas provided:
   a) The smooth welded wire fabric shall comply with ASTM A-185. and deformed welded wire fabric shall comply with ASTM A-497.
   b) Width and length of the unit is four times the spacing of the cross wires
   c) Wire fabric shall be continuous around the box, spliced at quarter point(s) with overlap of not less than the spacing of the cross wires plus two inches.
2. Concrete as specified in ASTM C-478, (4000 psi) may be used in lieu of Class I and Class II concrete in precast items manufactured in plants which are under the Standard Operating Procedures for the inspection of precast drainage products.
3. Welding of splices and laps is permitted., The requirements and restrictions placed on welding in AASHTO M-259 shall apply.
4. Horizontal steel in the walls of rectangular structures shall be lapped a minimum of 24 bar diameter at corners.

STATE OF FLORIDA DEPARTMENT OF TRANSPORTATION
ROAD DESIGN

SUPPLEMENTARY DETAILS FOR MANHOLES AND INLETS

	Names	Dates
Designed by	HLB	4/75
Drawn by		
Checked by	LMF	4/75

F.H.W.A. Approved: 10/7/80

Approved By _____ Deputy Design Engineer, Roadways

Revision No.	Sheet No.	Index No.
86	3 of 3	201

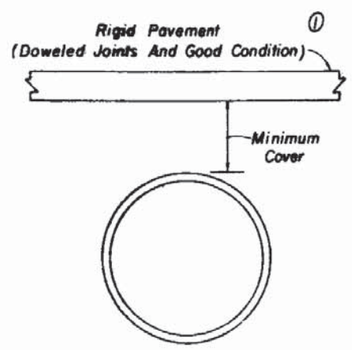

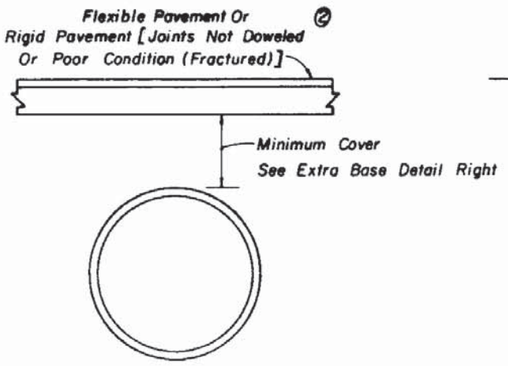

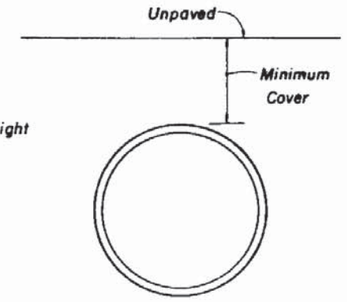

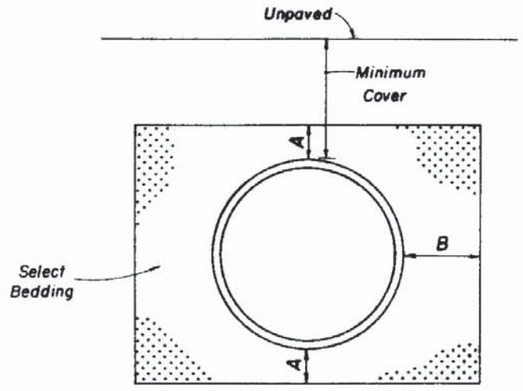

PIPE TYPE	A	B
Concrete	3"	12"
Corrugated Steel	6"	12"
Corrugated Aluminum	6"	12"
Corrugate Polyethlyene	6"	12"

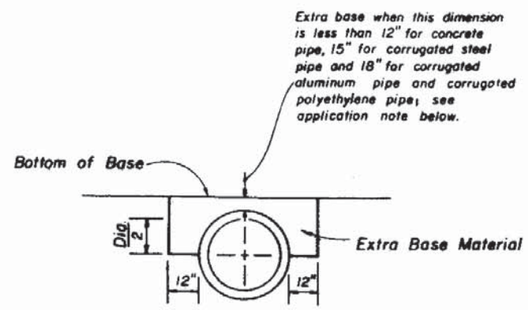

Note: Extra base is required when cross culverts are located on facilities subject to high speed traffic (>45 m p h) or high traffic volumes (>1600 ADT) and the cover is within the ranges specified in the notation above.

Extra base material to be paid for as equivalent square yard base, except when material is called for on cubic yard or tonnage basis.

EXTRA BASE FOR CROSS CULVERTS UNDER FLEXIBLE PAVEMENTS

GENERAL NOTES

1. The tabulated values are recommended minimum dimensions to withstand anticipated highway traffic loads. Additional cover may be required to support construction equipment loads or highway traffic loads before pavement is completed.
2. Less than the tabulated minimum cover may be used provided suitable method(s) are detailed in the plans. These features may include but are not limited to extra strength pipe, select bedding, select backfill, encasement and etc.
3. Values shown in parentheses are for 3"X 1" corrugations which must be specified to utilize the lesser cover.
4. Commercial and noncommercial refers to typical vehicular utilization of unpaved roads and drives where rutting and cover displacement may occur.

RIGID PAVEMENT ①

PIPE TYPE/SIZE & SHAPE	MINIMUM COVER
CONCRETE	
All Round & Elliptical	6"
CORRUGATED STEEL	
15"-72" Round & Arch Equiv.	9"
78" & Larger Round & Arch Eq.	15"
CORRUGATED ALUMINUM	
15"-72" Round & Arch Equiv.	9"
78"-102" Round & Arch Equiv.	15"
108" & Larger Round	18"
CORRUGATED POLYETHYLENE	
15"-24" Round	9"

FLEXIBLE PAVEMENT ②

PIPE TYPE/SIZE & SHAPE	MINIMUM COVER
CONCRETE	
All Round & Elliptical	6"
CORRUGATED STEEL	
15"-48" Round	12"
54" & Larger Round	18"
15"-48" Arch Equivalent	24"(12")
54"-102" Arch Equivalent	30"(18")
108" & Larger Arch Equivalent	36"(24")
CORRUGATED ALUMINUM	
15"-48" Round	12"
54"-72" Round	18"
78"-108" Round	24"
108"-120" Round	30"
15"-30" Arch Equivalent	24"
36"-48" Arch Equivalent	27"(15")
54"-66" Arch Equivalent	30"(18")
72"-90" Arch Equivalent	36"(24")
96"-102" Arch Equivalent	42"(30")
CORRUGATED POLYETHYLENE	
15"-24" Round	12"

UNPAVED W/O SELECT BEDDING

PIPE TYPE/SIZE & SHAPE	MINIMUM COVER	
	COMM	NON COMM
CONCRETE		
All Round & Elliptical	15"	9"
CORRUGATED STEEL		
15"-72" Round	24"	18"
78"-120" Round	30"	24"
15"-84" Arch Equivalent	24"	18"
90"-102" Arch Equivalent	30"	24"
108"-120" Arch Equivalent	36"	30"
CORRUGATED ALUMINUM		
15"-48" Round	24"	18"
54"-72" Round	30"	24"
78"-102" Round	36"	30"
108"-120" Round	42"	36"
15"-30" Arch Equivalent	24"	18"
36"-48" Arch Equivalent	27"	21"
54"-66" Arch Equivalent	30"	24"
72"-90" Arch Equivalent	36"	30"
96"-102" Arch Equivalent	42"	36"
CORRUGATED POLYETHYLENE		
15"-24" Round	24"	18"

UNPAVED WITH SELECT BEDDING

PIPE TYPE/SIZE & SHAPE	MINIMUM COVER	
	COMM	NON COMM
CONCRETE		
All Round & Elliptical	9"	6"
CORRUGATED STEEL		
15"-72" Round	18"	12"
78"-120" Round	24"	18"
15"-84" Arch Equivalent	18"	12"
90"-102" Arch Equivalent	24"	18"
108"-120" Arch Equivalent	30"	24"
CORRUGATED ALUMINUM		
15"-48" Round	18"	12"
54"-72" Round	24"	18"
78"-102" Round	30"	24"
108"-120" Round	36"	30"
15"-30" Arch Equivalent	18"	12"
36"-48" Arch Equivalent	21"	15"
54"-66" Arch Equivalent	24"	18"
72"-90" Arch Equivalent	30"	24"
96"-102" Arch Equivalent	36"	30"
CORRUGATED POLYETHYLENE		
15"-24" Round	18"	12"

MINIMUM COVER FOR CONCRETE, STEEL, ALUMINUM AND POLYETHYLENE PIPE

STATE OF FLORIDA DEPARTMENT OF TRANSPORTATION
ROAD DESIGN

COVER HEIGHT

	Names	Dates
Designed by	EGR	9/84
Drawn by	DAE	9/84
Checked by	EGR	9/84
F.H.W.A. Approved:		9/21/84

Approved By
L. C. Bartlett
State Design Engineer, Roadways

Revision No.	Sheet No.	Index No.
86	1 of 4	205

ROUND PIPE DIMENSIONS

Equiv. Dia. (In.)	Area (Sq.Ft.)	Wall Thickness (In.) Classes III, IV, V		
		A Wall	B Wall	C Wall
12	0.8	1 3/4	2	N.A.
15	1.2	1 7/8	2 1/4	N.A.
18	1.8	2	2 1/2	N.A.
24	2.4	2 1/2	3	3 3/4
30	4.9	2 3/4	3 1/2	4 1/4
36	7.1	3	4	4 3/4
42	9.6	3 1/2	4 1/2	5 1/4
48	12.6	4	5	5 3/4
54	15.9	4 1/2	5 1/2	6 1/4
60	19.6	5	6	6 3/4
66	23.8	5 1/2	6 1/2	7 1/4
72	28.3	6	7	7 3/4
78	33.2	6 1/2	7 1/2	8 1/4
84	38.5	7	8	8 3/4
90	44.4	7 1/2	8 1/2	9 1/4
96	50.3	8	9	9 3/4
102	56.7	8 1/2	9 1/2	10 1/4
108	63.7	9	10	10 3/4
114	70.9	9 1/2	—	—
120	78.5	10	—	—

ROUND PIPE INSTALLATIONS
(All Sizes)

Design	Height Of Fill (Ft.)	Pipe Class	Bedding Class	Projection Condition
Standard	1 - 14	III	C	Positive
	15 - 22	IV	C	Positive
	23 - 26	V	C	Positive
Modified Bedding	27 - 32	V	B	Positive
Modified Trench	33 - 43	V	B	Zero
	44 - 70	V	B	Negative
	71 +	V	B	Imperfect

Pipe Class III — D-Load = 1350 Lbs/Ft/Ft (.01" Crack)
D-Load = 2000 Lbs/Ft/Ft (Ultimate)

Pipe Class IV — D-Load = 2000 Lbs/Ft/Ft (.01" Crack)
D-Load = 3000 Lbs/Ft/Ft (Ultimate)

Pipe Class V — D-Load = 3000 Lbs/Ft/Ft (.01" Crack)
D-Load = 3750 Lbs/Ft/Ft (Ultimate)

ELLIPTICAL PIPE DIMENSIONS

Nominal Dimensions Horiz. Rise (In.)	Horiz. Span (In.)	Vert. Rise (In.)	Vert. Span (In.)	Equiv. Dia. (In.)	Area (Sq.Ft.)	Wall Thickness (In.) Classes HE III, HE IV, VE III, VE IV
NA	NA	NA	NA	12	NA	NA
12	18	18	12	15	1.3	2 1/2
14	23	23	14	18	1.8	2 3/4
19	30	30	19	24	3.3	3 1/4
24	38	38	24	30	5.1	3 3/4
29	45	45	29	36	7.4	4 1/2
34	53	53	34	42	10.2	5
38	60	60	38	48	12.9	5 1/2
43	68	68	43	54	16.6	6
48	76	76	48	60	20.5	6 1/2
53	83	83	53	66	24.8	7
58	91	91	58	72	29.5	7 1/2
63	98	98	63	78	34.6	8
68	106	106	68	84	40.1	8 1/2
72	113	113	72	90	46.1	9
77	121	121	77	96	52.4	9 1/2
82	128	128	82	102	59.2	10
87	136	136	87	108	66.4	10 1/2
92	143	143	92	114	74.0	11
97	151	151	97	120	82.0	11 1/2

ELLIPTICAL PIPE INSTALLATIONS
(All Sizes)

Installation	Height Of Fill (Ft.)	Pipe Class	Bedding Class
Horizontal	1 - 13	HE III	C
	14 - 21	HE IV	C
	22 +	By Special Design	Modified
Vertical	1 - 13	VE III	C
	14 - 21	VE IV	C
	22 +	By Special Design	Modified

Pipe Class HE III — D-Load = 1350 Lbs/Ft/Ft (.01" Crack)
D-Load = 2000 Lbs/Ft/Ft (Ultimate)

Pipe Class HE IV — D-Load = 2000 Lbs/Ft/Ft (.01" Crack)
D-Load = 3000 Lbs/Ft/Ft (Ultimate)

Pipe Class VE III — D-Load = 1350 Lbs/Ft/Ft (.01" Crack)
D-Load = 2000 Lbs/Ft/Ft (Ultimate)

Pipe Class VE IV — D-Load = 2000 Lbs/Ft/Ft (.01" Crack)
D-Load = 3000 Lbs/Ft/Ft (Ultimate)

MAXIMUM COVER FOR REINFORCED CONCRETE PIPE ROUND AND ELLIPTICAL

STATE OF FLORIDA DEPARTMENT OF TRANSPORTATION
ROAD DESIGN

COVER HEIGHT

	Names	Dates
Designed by	EGR	9/85
Drawn by	HSD	9/85
Checked by	EGR	9/85
F.H.W.A. Approved:		

Approved By _____
State Design Engineer, Roadways

Revision No.	Sheet No.	Index No.
86	2 of 4	205

ROUND PIPE - $2\frac{2}{3}$" x $\frac{1}{2}$" CORRUGATION

D (In)	Area (Sq. Ft.)	Maximum Height Of Cover (Ft.) Sheet Thickness In Inches (Gage) 0.064 (16)	0.079 (14)	0.109 (12)	0.138 (10)	0.168 (8)	Min. Height Of Cover (Ft.)
12	.79	100+	100+	NA	NA	NA	
15	1.23	100+	100+	NA	NA	NA	
18	1.77	100+	100+	100+	NA	NA	
21	2.40	100+	100+	100+	NA	NA	
24	3.14	100+	100+	100+	NA	NA	
30	4.91	85	100+	100+	NA	NA	
36	7.1	71+	88	100+	100+	NA	See Sheet 1 of 4
42	9.6	60+	76	100+	100+	NA	
48	12.6	53	66	93	100+	100+*	
54	16.0	[illegible]	59	82	100+	100+*	
60	19.6	NS	NS	74	95	100+*	
66	23.8	NS	NS	NS	87	100+*	
72	28.3	NS	NS	NS	79	97*	
78	33.2	NS	NS	NS	NS	90*	
84	38.5	NS	NS	NS	NS	83*	

ROUND PIPE - 3" x 1" CORRUGATION

D (In)	Area (Sq. Ft.)	Maximum Height Of Cover (Ft.) Sheet Thickness In Inches (Gage) 0.064 (16)	0.079 (14)	0.109 (12)	0.138 (10)	0.168 (8)	Min. Height Of Cover (Ft.)
36	7.1	81	100+	100+	NA	NA	
42	9.6	70	87	100+	NA	NA	
48	12.6	61	76	100+	100+	NA	
54	16.0	54	68	95	100+	NA	
60	19.6	48	61	85	100+	NA	
66	23.8	44	55	78	100	100+*	
72	28.3	40	51	71	91	100+*	See Sheet 1 of 4
78	33.2	37	47	66	84	100+*	
84	38.5	35	43	61	78	100+*	
90	44.2	32	40	57	73	90*	
96	50.3	NS	38	53	68	84*	
102	56.7	NS	36	50	64	79*	
108	63.6	NS	NS	47	61	75*	
114	70.9	NS	NS	45	58	71*	
120	78.5	NS	NS	42	55	67*	
132	95.0	NS	NS	NS	50	61*	

ROUND PIPE - 5" x 1" CORRUGATION

D (In)	Area (Sq. Ft.)	Maximum Height Of Cover (Ft.) Sheet Thickness In Inches (Gage) 0.064 (16)	0.079 (14)	0.109 (12)	0.138 (10)	0.168 (8)	Min. Height Of Cover (Ft.)
36	7.1	72	90	100+	NA	NA	
42	9.6	62	77	100+	NA	NA	
48	12.6	54	68	95	100+	NA	
54	16.0	48	60	84	100+	NA	
60	19.6	43	54	76	98	NA	
66	23.8	39	49	69	89	100+*	
72	28.3	36	45	63	81	100*	See Sheet 1 of 4
78	33.2	33	41	58	75	92*	
84	38.5	31	38	54	70	85*	
90	44.2	29	36	50	65	80*	
96	50.3	NS	34	47	61	75*	
102	56.7	NS	32	44	57	70*	
108	63.6	NS	NS	42	54	66*	
114	70.9	NS	NS	40	51	63*	
120	78.5	NS	NS	38	49	60*	
132	95.0	NS	NS	NS	44	54*	

PIPE ARCH - $2\frac{2}{3}$" x $\frac{1}{2}$" CORRUGATION

Span (In)	Rise (In)	Equiv. Round Pipe (In)	Area (Sq. Ft.)	Minimum Sheet Thickness Required (In)(Ga)	Maximum Height Of Cover (Ft.) Maximum Corner Pressure-Lbs/Sq.Ft. 4000	6000	Min. Height Of Cover (Ft.)
17	13	15	1.1	.064(16)	12	14	
21	15	18	1.6	.064(16)	10	14	
24	18	21	2.2	.064(16)	7	13	
28	20	24	2.9	.064(16)	5	11	
35	24	30	4.5	.064(16)	NS	7	
42	29	36	6.5	.064(16)	NS	7	See Sheet 1 of 4
49	33	42	8.9	.079(14)	NS	6	
57	38	48	11.6	.109(12)	NS	8	
64	43	54	14.7	.109(12)	NS	9	
71	47	60	18.1	.138(10)	NS	10	
77	52	66	21.9	.168(8)*	5	10	
83	57	72	26.0	.168(8)*	5	10	

PIPE ARCH - 3" x 1" and 5" x 1" CORRUGATION

Span (In)	Rise (In)	Equiv. Round Pipe (In)	Area (Sq. Ft.)	Minimum Sheet Thickness Required (In)(Ga)	Maximum Height Of Cover (Ft.) Maximum Corner Pressure-Lbs/Sq.Ft. 4000	6000	Min. Height Of Cover (Ft.)
40	31	36	7.0	.079(14)	8	12	
46	36	42	9.4	.079(14)	8	13	
53	41	48	12.3	.079(14)	8	13	
60	46	54	15.6	.079(14)	8	13	
66	51	60	19.3	.079(14)	9	13	
73	55	66	23.2	.079(14)	11	16	
81	59	72	27.4	.079(14)	11	17	See Sheet 1 of 4
87	63	78	32.1	.079(14)	10	16	
95	67	84	37.0	.079(14)	11	17	
103	71	90	42.4	.109(12)	10	15	
112	75	96	48.0	.109(12)	10	16	
117	79	102	54.2	.109(12)	10	15	
128	83	108	60.5	.138(10)	9	14	
137	87	114	67.4	.138(10)	8	13	
142	91	120	74.5	.168(8)	7	12	

* Recorrugated and not available. May be considered for cross drain and side drain applications only.
NA - Not Available
LA - Limited Availability
NS - Not Suitable (For Highway H-20 Loadings)

MAXIMUM COVER FOR CORRUGATED STEEL PIPE ROUND AND PIPE ARCH

STATE OF FLORIDA DEPARTMENT OF TRANSPORTATION
ROAD DESIGN

COVER HEIGHT

	Names	Dates
Designed by	EGR	9/85
Drawn by	HSD	9/85
Checked by	EGR	9/85
F.H.W.A. Approved:		

Approved By
State Design Engineer, Roadways

Revision No.	Sheet No.	Index No.
86	3 of 4	205

ROUND PIPE - $2\frac{2}{3}$" x $\frac{1}{2}$" CORRUGATION

D (In)	Area (Sq. Ft.)	Maximum Height Of Cover (Ft.) Sheet Thickness In Inches (Gage) 0.060 (16)	0.075 (14)	0.105 (12)	0.135 (10)	0.164 (8)	Min. Height Of Cover (Ft.)
12	0.8	90	100+	NA	NA	NA	See Sheet 1 of 4
15	1.2	72	90	NA	NA	NA	
18	1.8	59	75	100+	NA	NA	
21	2.4	52	65	92	NA	NA	
24	3.1	44	56	79	NA	NA	
30	4.9	35 SR	44	63	NA	NA	
36	7.1	29 SR/NR	36 SR	52	68	NA	
42	9.6	25 SR/NR	31 SR/NR	44 SR	58	NA	
48	12.6	NS	27 SR/NR	38 SR/NR	50 SR	61	
54	15.9	NS	NS	34 SR/NR	45 SR/NR	54 SR	
60	19.6	NS	NS	NS	39 SR/NR	49 SR/NR	
66	23.8	NS	NS	NS	36 SR/NR	44 SR/NR	
72	28.3	NS	NS	NS	NS	40 SR/NR	

ROUND PIPE - 3" x 1" CORRUGATION

D (In)	Area (Sq. Ft.)	Maximum Height Of Cover (Ft.) Sheet Thickness In Inches (Gage) 0.060 (16)	0.075 (14)	0.105 (12)	0.135 (10)	0.164 (8)	Min. Height Of Cover (Ft.)
36	7.1	33	42	60	NA	NA	See Sheet 1 of 4
42	9.6	28	36	51	NA	NA	
48	12.6	24	31	45	58	NA	
54	15.9	21	28	39	51	NA	
60	19.6	19	24	35	46	NA	
66	23.8	15 SR	22	32	42	51	
72	28.3	14 SR/NR	20 SR	29	38	47	
78	33.2	NS	15 SR	27	35	43	
84	38.5	NS	NS	24 SR	32	40	
90	44.2	NS	NS	23 SR	30	37	
96	50.3	NS	NS	21 SR/NR	28 SR	34	
102	56.7	NS	NS	NS	26 SR	32	
108	63.6	NS	NS	NS	24 SR/NR	30 SR	
114	70.9	NS	NS	NS	23 SR/NR	28 SR	
120	78.5	NS	NS	NS	22 SR/NR	27 SR/NR	

PIPE ARCH - $2\frac{2}{3}$" x $\frac{1}{2}$" CORRUGATION

Span (In)	Rise (In)	Equiv. Round Pipe (In)	Area (Sq. Ft.)	Minimum Sheet Thickness Required (In)(Ga)	Maximum Height Of Cover (Ft.) Maximum Corner Pressure-Lbs/Sq.Ft. 4000	6000	Min. Height Of Cover (Ft.)
17	13	15	1.1	.060(16)	12	15	See Sheet 1 of 4
21	15	18	1.6	.060(16)	10	14	
24	18	21	2.2	.060(16)	7	13	
28	20	24	2.9	.075(14)	5	11	
35	24	30	4.5	.075(14)	NS	7	
42	29	36	6.5	.105(12)	NS	7	
49	33	42	8.9	.105(12)	NS	6	
57	38	48	11.6	.135(10)	NS	8	
64	43	54	14.7	.135(10)	NS	9	
71	47	60	18.1	.164(8)	NS	10	
77	52	66	21.9	.164(8)	NS	10	
83	57	72	26.0	.164(8)	NS	10	

PIPE ARCH - 3" x 1" CORRUGATION

Span (In)	Rise (In)	Equiv. Round Pipe (In)	Area (Sq. Ft.)	Minimum Sheet Thickness Required (In)(Ga)	Maximum Height Of Cover (Ft.) Maximum Corner Pressure-Lbs/Sq.Ft. 4000	6000	Min. Height Of Cover (Ft.)
40	31	36	7.0	.060(16)	8	12	See Sheet 1 of 4
46	36	42	9.4	.060(16)	8	13	
53	41	48	12.3	.060(16)	8	13	
60	46	54	15.6	.075(14)	8	13	
66	51	60	19.3	.075(14)	8	13	
73	55	66	23.2	.105(12)	11	16	
81	59	72	27.4	.105(12)	11	17	
87	63	78	32.1	.105(12)	10	16	
95	67	84	37.0	.105(12)	11	17	
103	71	90	42.4	.135(10)	10	15	
112	75	96	48.0	.135(10)	10	16	
117 LA	79	102	54.2	.164(8)	10	15	

NA - Not Available

LA - Limited Availability

NS - Not Suitable (For Highway H-20 Loadings)

SR - Structural Review Required Which Shall Consider Temporary And Permanent Cover And Loadings (When FF > 0.0443 < 0.055)◇

SR/NR - Structural Review Required - Not Recommended Except For Deep Trench Installations (Deep ≥ Than 1.5D Above Top Of Pipe) (When FF > 0.055)◇

◇ The structural review performed by the designer does not relieve the contractor from analyzing and taking any necessary precautions required to protect partially or completely constructed pipe from the equipment used during construction.

CORRUGATED ALUMINUM ALLOY ROUND PIPE AND PIPE ARCH

STATE OF FLORIDA DEPARTMENT OF TRANSPORTATION
ROAD DESIGN

COVER HEIGHT

	Names	Dates
Designed by	EGR	9/85
Drawn by	NSD	9/85
Checked by	EGR	9/85

Approved By: State Design Engineer, Roadways

F.H.W.A. Approved:

Revision No.	Sheet No.	Index No.
86	4 of 4	205

APPLICATION AND SELECTION GUIDE TO CURB INLETS AND GUTTER INLETS

INDEX NO.	INLET TYPE	TYPE CURB / GUTTER	GRADE CONSIDERATION	HYDRAULIC INTAKE (CFS) (1)	BICYCLE SAFE / PEDESTRIAN SAFE	UTILITY LOCATION FROM CURB	MAXIMUM PIPE SIZE WITH STANDARD BOTTOMS (5)	COMMENTS
210 (2)	1	E & F	Continuous	4.1	Yes / Limited	Inside	30"	
	2 (3)	E & F	Sag	9.0	Yes / Limited	Inside	30"	
	3	E & F	Continuous	1.9	Yes / Limited	Inside	30"	
	4 (3)	E & F	Sag	6.5	Yes / Limited	Inside	30"	
211 (2)	5	E & F	Continuous	3.1	Yes / Limited	Outside	30"	
	6 (3)	E & F	Sag	7.5	Yes / Limited	Outside	30"	
212 (2)	7	Separator I & II	Continuous / Sag	4.4	Yes / Limited	Inside	24" Longitudinal 30" Transverse	
213 (2)	8	Separator IV & V	Continuous / Sag	4.4	Yes / Limited	Inside	24" Longitudinal 30" Transverse	
214 (2)	9	F	Continuous or Sag	0.5	Yes / Yes	Outside	30"	To be used only where flows are light to moderate and R/W does not permit the use of throated curb inlets. Vanes to be directed to major flow direction.
215 (2)	10	F	Continuous or Sag	0.3	Yes / Yes	Outside	30"	To be used only where flows are light and R/W does not permit the use of throated curb inlets.
217	1	Median Barrier Wall	Continuous	4.0	Yes / Yes (4)	N A	15" Longitudinal 30" Transverse	
	2	Median Barrier Wall	Sag	5.0	Yes / Yes (4)	N A	15" Longitudinal 30" Transverse	
	3 (3)	Median Barrier Wall	Double Inlet Continuous	4.0	Yes / Yes (4)	N A	42" Longitudinal 30" Transverse	
	4 (3)	Median Barrier Wall	Double Inlet Sag	5.0	Yes / Yes (4)	N A	42" Longitudinal 30" Transverse	
	5 (3)	Median Barrier Wall	Double Inlet Sag and Continuous	5.0	Yes / Yes (4)	N A	42" Longitudinal 30" Transverse	
220	S	Shoulder	Continuous	4.0	Yes / Yes	NA	30" Transverse	
221	V	Valley	Continuous or Sag	5.0	Yes / Yes	NA	30" Transverse	

(1) Hydraulic intake values do not represent hydraulic capacity but are shown to compare inlets based on a 0.2% longitudinal slope, .02 cross slope and a 90% efficiency factor. For other conditions the values shown should be adjusted for bypass flow or debris blockage. Sag inlet intake value is based on flooding the outside lane or shoulder, where spread rather than hydraulic intake may dictate inlet selection or spacing. Full design data and additional information is available in "A Study of Stormwater Inlet Capacities" by U.S.F.

(2) Curb inlets and transitions should be located outside pedestrian cross walk areas, preferably upgrade from these locations.

(3) Double throated inlets are usually not warranted unless the minor flow is in excess of 50 feet distance or 0.5 cfs.

(4) Median Barrier inlets types 1, 2, 3, 4 & 5 can be made bicycle and pedestrian safe by specifying the reticuline grate.

(5) Pipe sizes are circular, Class III B Wall, concrete pipe. Elliptical pipe and corrugated pipe are to be checked for fit in accordance with Index No. 201; metal pipe sizes should be reviewed using $2\frac{2}{3}$" X $\frac{1}{2}$" corrugation up to 30" and 3" X 1" corrugation for larger sizes.

STATE OF FLORIDA DEPARTMENT OF TRANSPORTATION
ROAD DESIGN

CURB INLET AND GUTTER INLET SELECTION GUIDE

	Names	Dates
Designed by	E G R	9/6/84
Drawn by	D A E	9/6/84
Checked by	E G R	9/6/84
F.H.W.A. Approved		9/21/84

Approved By _____
State Design Engineer Roadways

Revision No.	Sheet No.	Index No.
85	1 of 1	209

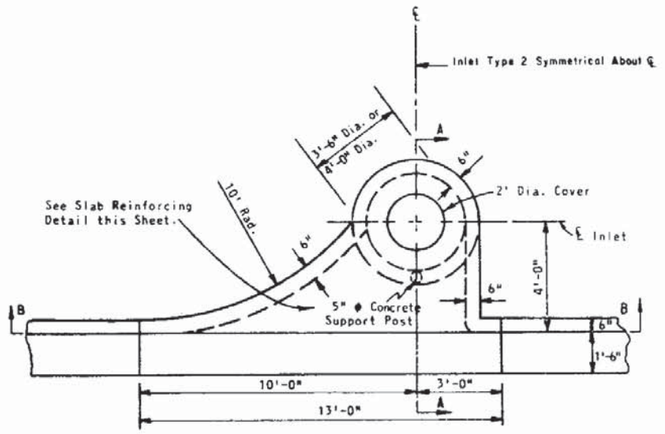

INLET TYPE 1

Inlet Type 2 Symmetrical About ℄

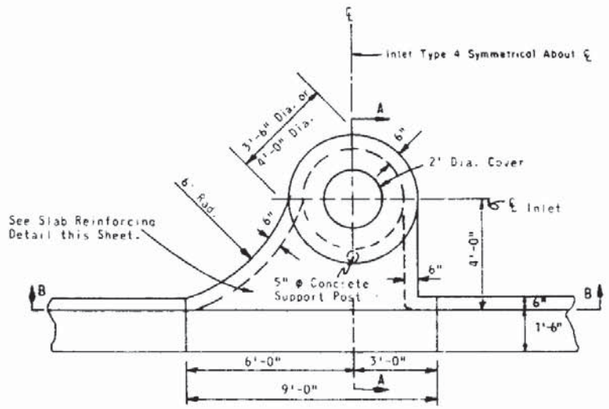

INLET TYPE 3

Inlet Type 4 Symmetrical About ℄

GENERAL NOTES

1. The finished grade and slope of the inlet tops are to conform with the finished cross slope and and grade of the proposed sidewalk and/or border.
2. When inlets are to be constructed on a curve, refer to the plans to determine the radius and, where necessary, modify the inlet details accordingly. Bend steel when necessary.
3. All steel in inlet tops shall have 1½" minimum cover unless otherwise shown. Inlet tops shall be either cast-in-place or precast concrete.
4. The rear wall portion of inlet tops Types 1,2,3 & 4 may be constructed with brick. Dowels to top slab required.
5. Only round concrete support post will be acceptable.
6. For supplemental details see Index No. 201.
7. These inlets are to be used with Curb and Gutter Types E and F. Locate outside of pedestrian crosswalk where practical.
8. For structure bottoms see Index No. 200.

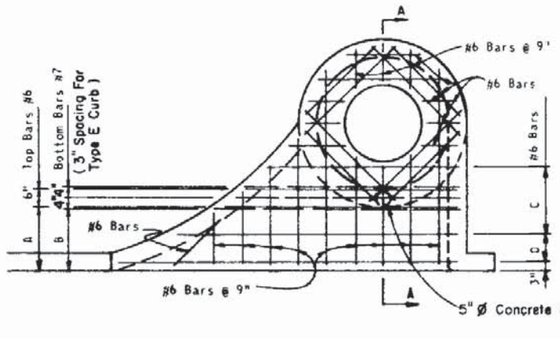

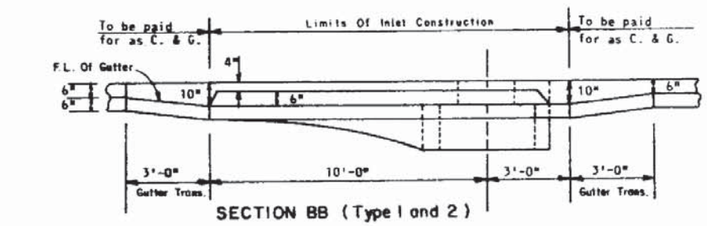

SECTION BB (Type 1 and 2)

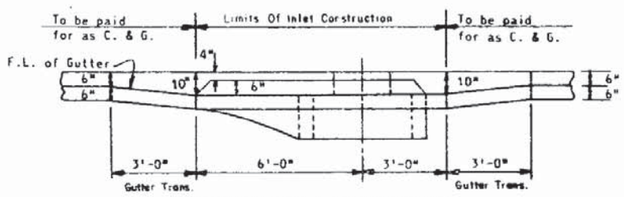

SECTION BB (Type 3 and 4)

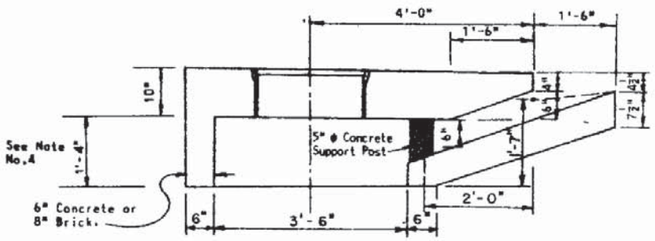

DIMENSIONAL SECTION

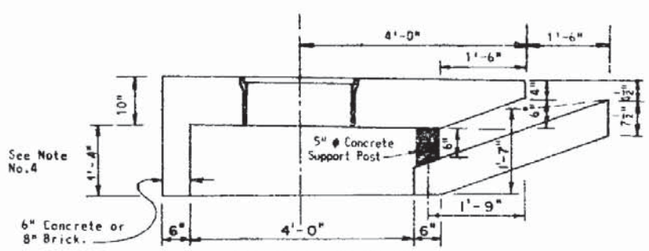

DIMENSIONAL SECTION

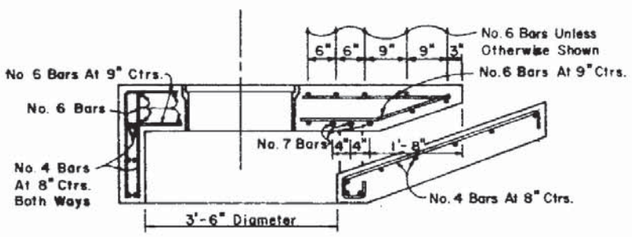

REINFORCING SECTION

3'-6" DIA. STRUCTURE BOTTOM (SECTION AA)

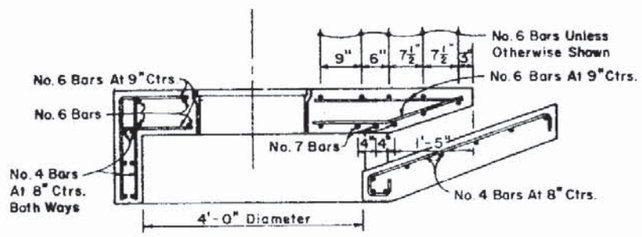

REINFORCING SECTION

4'-0" DIA. STRUCTURE BOTTOM (SECTION AA)

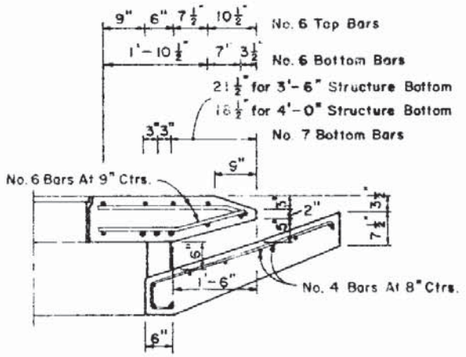

DIMENSION & REINFORCING SECTION FOR TYPE E CURB

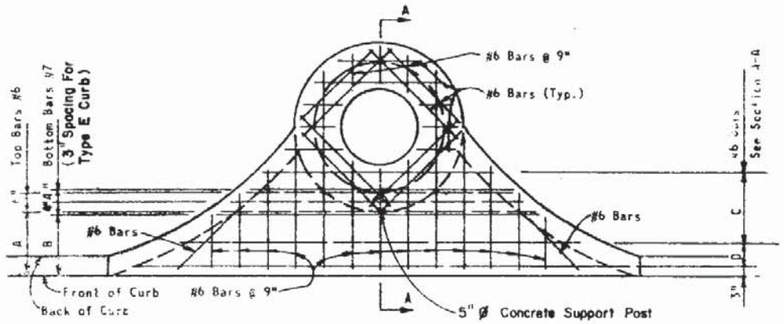

TABLE OF VARIABLE DIMENSIONS		
DIMENSION	3'-6"	4'-0"
A	1'-9"	1'-6"
B	1'-8"	1'-5"
C	1'-9"	1'-10½"
D	9"	7½"

SLAB REINFORCING INLETS 1, 2, 3 and 4

TRANSVERSE SECTIONS FOR INLETS TYPES 1,2,3 & 4

STATE OF FLORIDA DEPARTMENT OF TRANSPORTATION
ROAD DESIGN

CURB INLET TOPS TYPES 1,2,3,&4

	Name	Date
Designed by		
Drawn by		
Checked by		

F.H.W.A. Approved: 5/1/75

Approved By: Deputy Design Engineer, Roadways

Revision No.	Sheet No.	Index No.
84	1 of 1	210

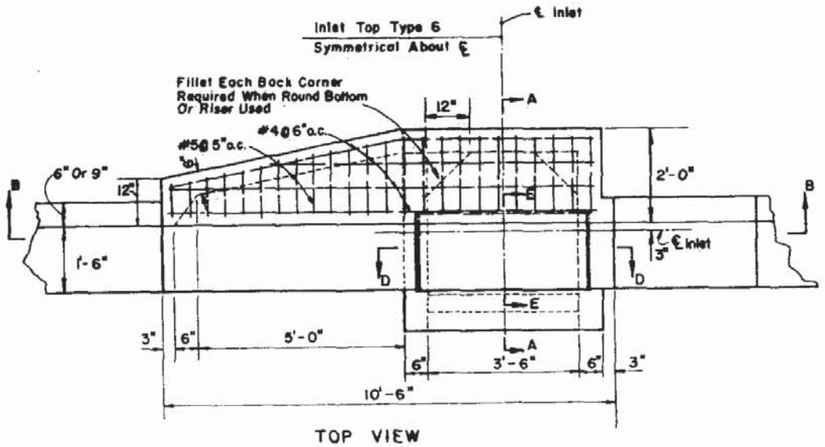

TOP VIEW

INLET TYPE 5

(Curb Inlet Top Type 6 Symmetrical With Left Half)

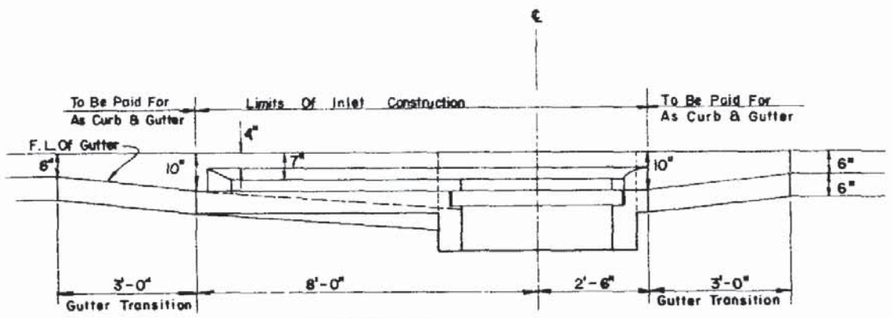

SECTION BB

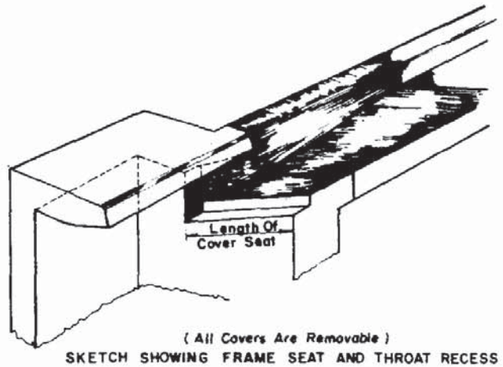

(All Covers Are Removable)

SKETCH SHOWING FRAME SEAT AND THROAT RECESS

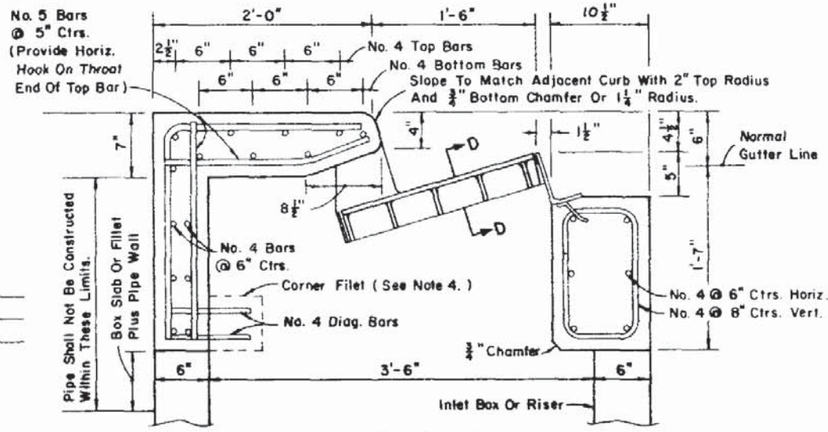

(Steel Cover Shown)

SECTION AA

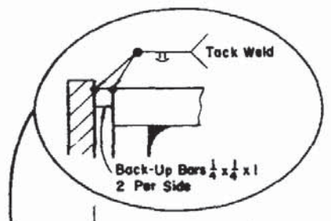

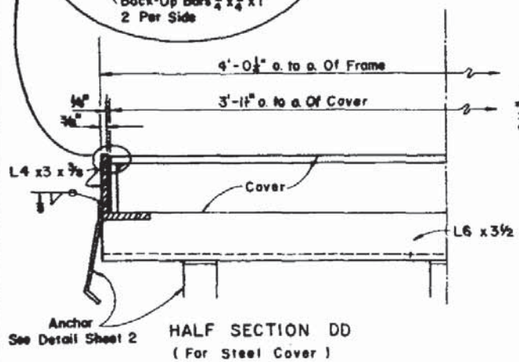

HALF SECTION DD

(For Steel Cover)

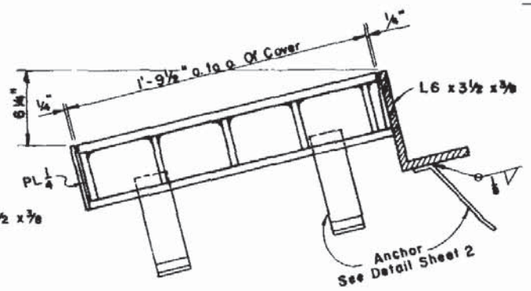

SECTION EE

(For Steel Cover)

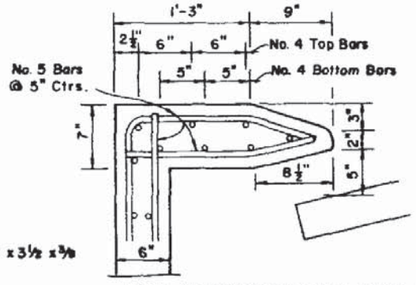

TOP MODIFICATION FOR TYPE E CURB

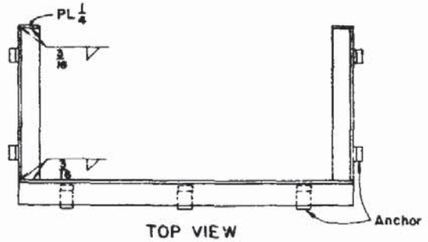

TOP VIEW

FRAME

(For Steel Cover)

GENERAL NOTES

1. The finished grade and slope of the inlet tops are to conform with the finished cross slope and grade of the proposed sidewalk and/or parkway.
2. When inlets are to be constructed on a curve, refer to the plans to determine the radius and, where necessary, modify the inlet details accordingly. Bend steel when necessary.
3. All reinforcing steel shall have 1½" minimum cover unless otherwise shown. Inlet tops shall be either cast-in-place or precast concrete.
4. *Precasting of this inlet top will be permitted. Precast units shall conform to the dimensions* shown or in accordance with approved shop drawings. Request for shop drawing approval shall be directed to the D.O.T. Engineer of Drainage.
5. *Concrete meeting the requirements* of A.S.T.M. C 478 (4,000 P.S.I.) may be used in lieu of Class I concrete for precast units, manufactured in plants which are under the Standard Operating Procedures for the inspection of precast drainage products.
6. *The corner fillets shown for rectangular throats are necessary only when throats are to be* used in conjunction with circular inlet bottoms or when used on skew with rectangular inlet boxes.
7. For inlet bottoms see Index No. 200.
8. These inlet tops are designed for use with standard curb and gutter Type E and Type F. Locate outside of pedestrian crosswalk where practical.
9. See Index 201 for supplemental details.
10. All steel used for frame and cover shall meet the requirements of ASTM A-36.
11. Either cast iron covers or steel covers may be used. Iron covers shall be Class No. 30 castings in accordance with ASTM A-48.
12. When Alternate "G" Cover is specified in plans either the cast iron cover and galvanized steel frame or the galvanized steel cover and frame must be used. Covers are to be grouted in accordance with the grouting detail shown on sheet 2 of 2, in lieu of tack welding.
13. Tack weld cover to frame with back-up bars or clips.

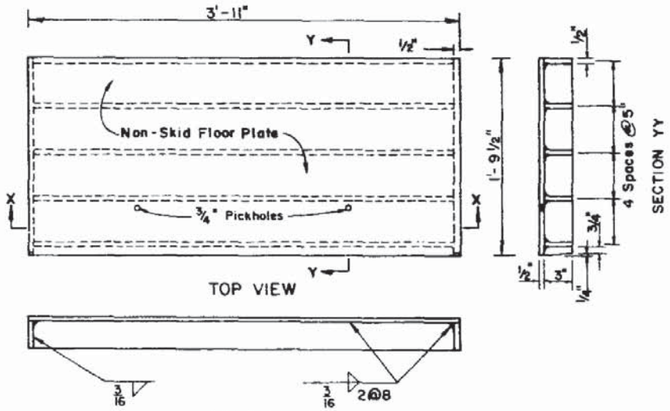

TOP VIEW

SECTION XX

STEEL COVER

(See Sheet 2 of 2 For Cast Iron Cover And Frame)

STATE OF [illegible] DEPARTMENT OF TRANSPORTATION

CURB INLET TOPS TYPES 5 & 6

Designed By			
Drawn By			
Checked By			
F.H.W.A. Approved	85	1 of 2	211

J. C. Bullard
Deputy Design Engineer, Roadways

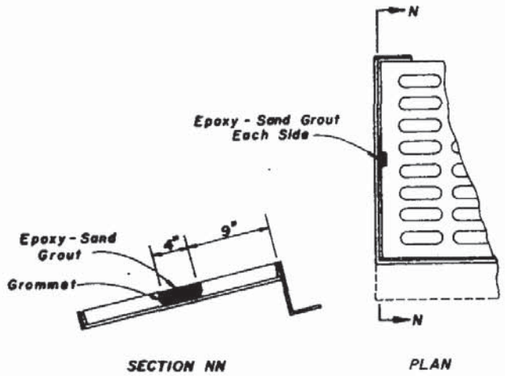

SECTION NN PLAN

CAST IRON COVER AND GALVANIZED STEEL FRAME

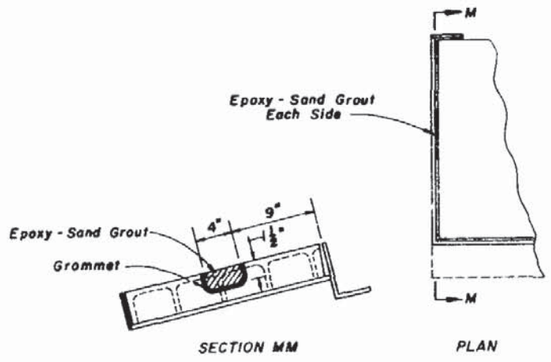

SECTION MM PLAN

GALVANIZED STEEL COVER AND FRAME

ALTERNATE G DETAIL

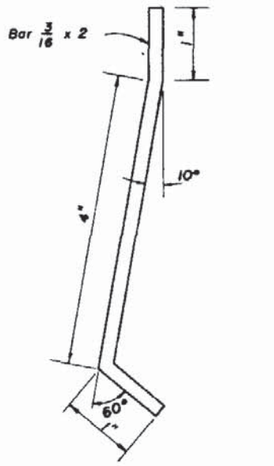

ANCHOR DETAIL

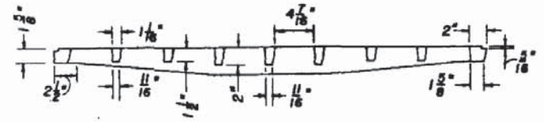

SECTION GG

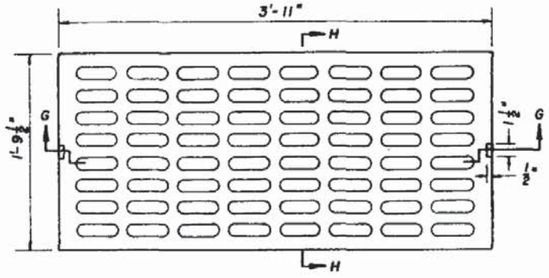

TOP VIEW

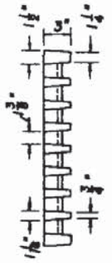

CAST IRON COVER

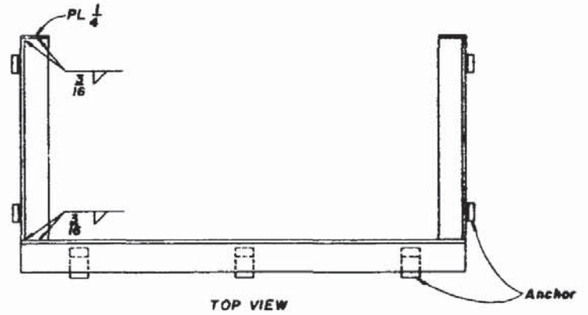

TOP VIEW

FRAME

(For Cast Iron Cover)

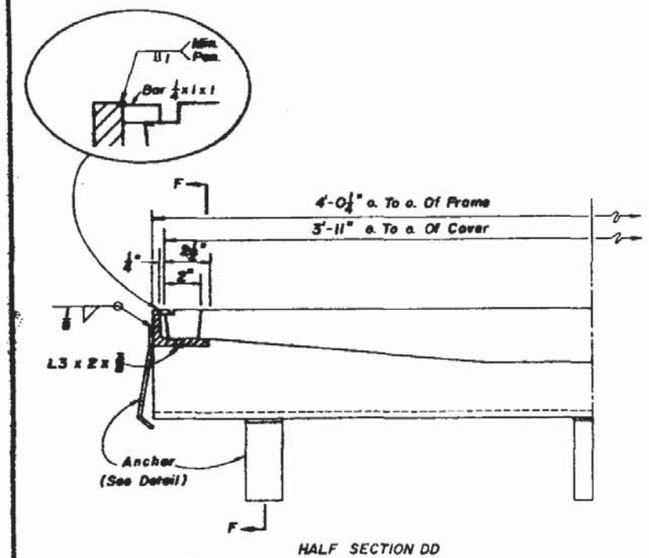

HALF SECTION DD

(For Cast Iron Cover)

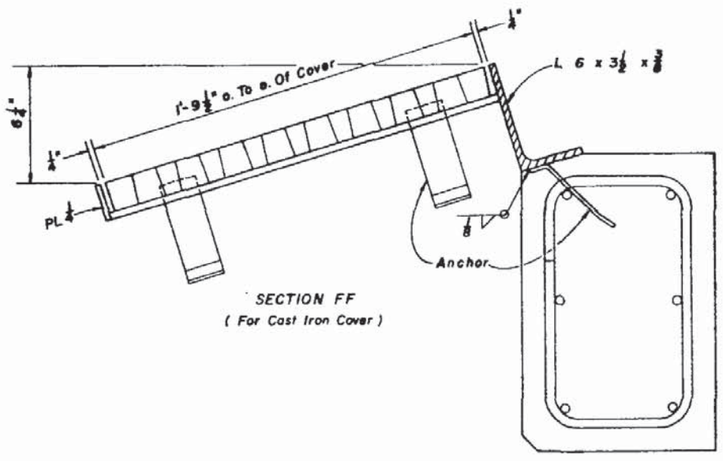

SECTION FF

(For Cast Iron Cover)

STATE OF FLORIDA DEPARTMENT OF TRANSPORTATION
ROAD DESIGN

CURB INLET TOPS TYPES 5 & 6

	Name	Date
Designed by		
Drawn by		
Checked by		

Approved By

Deputy Design Engineer, Roadways

F.H.W.A. Approved:

Revision No.	Sheet No.	Index No.
85	2 of 2	211

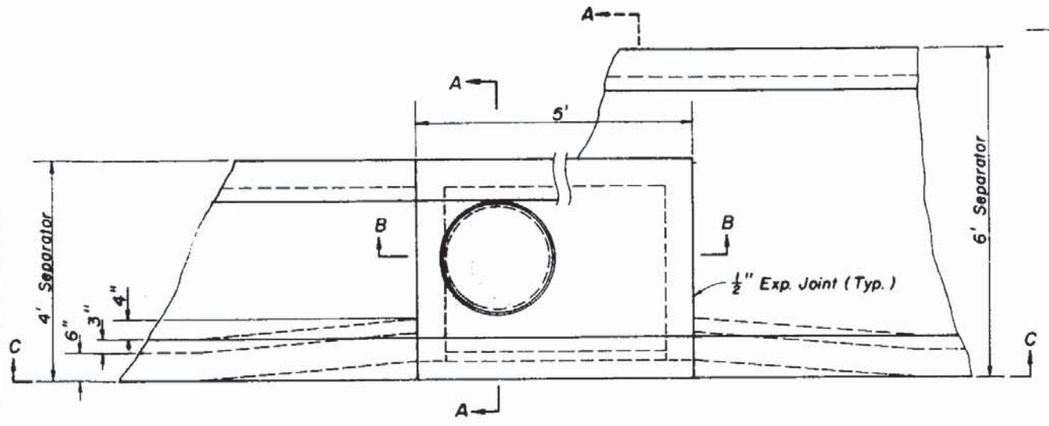

PLAN

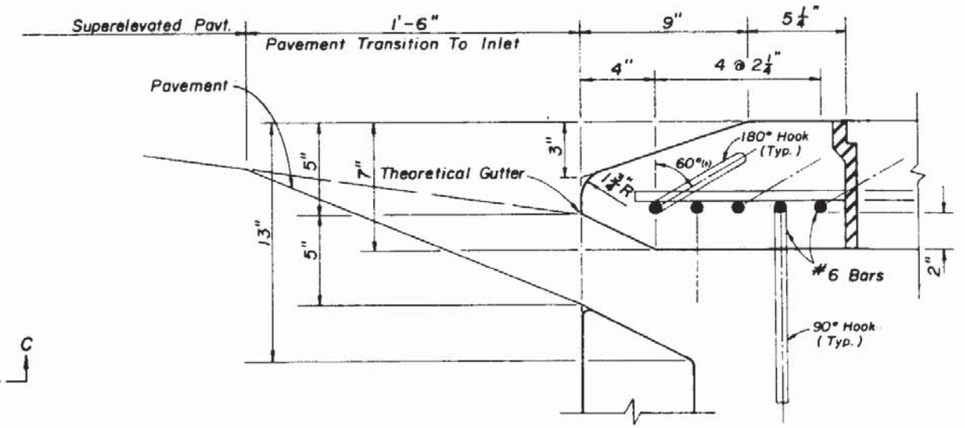

THROAT DETAIL

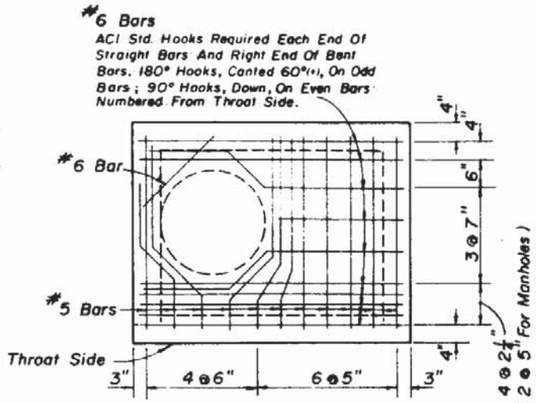

REINFORCING STEEL DIAGRAM
TOP SLAB OF INLETS

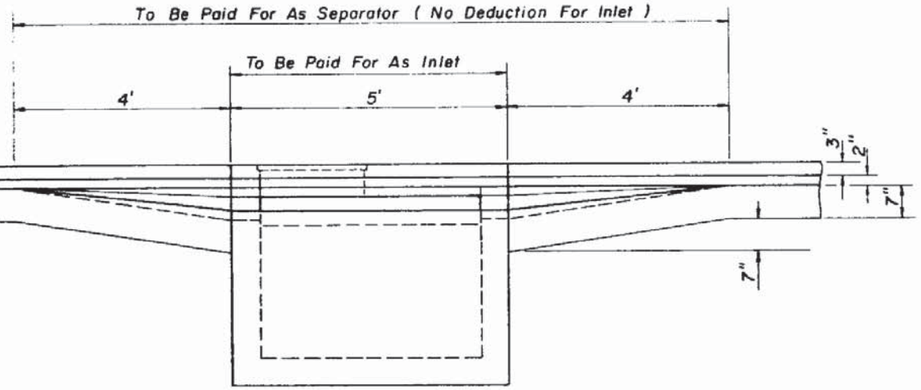

SECTION CC

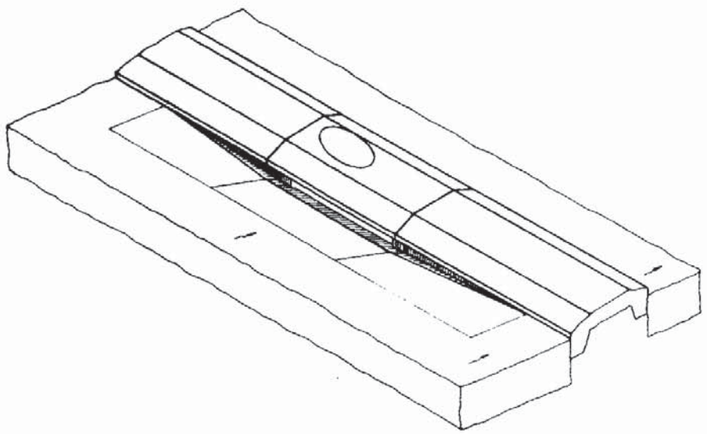

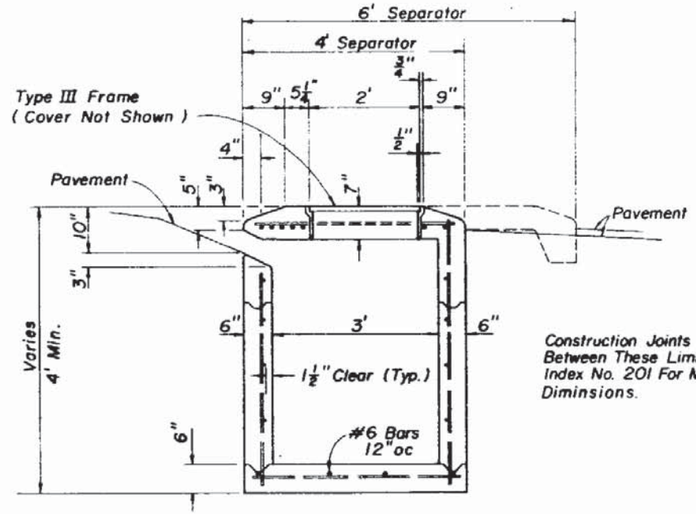

SECTION AA

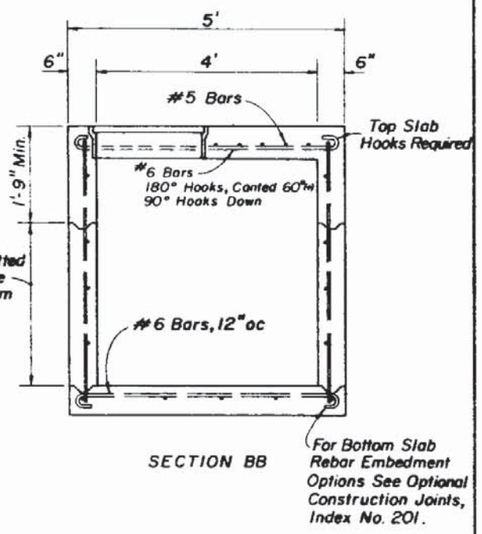

SECTION BB

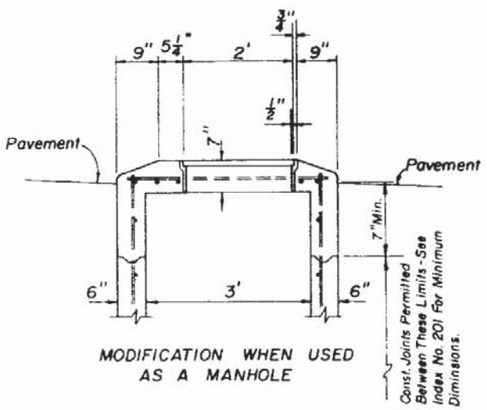

MODIFICATION WHEN USED AS A MANHOLE

GENERAL NOTES

1. This inlet is used in Traffic Separators Types I and II that are located in medians constructed with Curbs Types A, B and E. Use of this Inlet on through traffic side of the separator is not permitted in medians with Curbs Types A and B. Locate inlet outside of pedestrian cross traffic.
2. Reinforcing - No. 4 bars @ 12" centers unless otherwise noted. Cut or bend bars out of way of pipe when necessary. Bars to clear pipe by 1½".
3. Recommended maximum pipe sizes are 24" longitudinal and 30" transverse. For larger pipe, inlets with bottoms Type J, Alt. B, Index No. 200 are recommended.
4. For supplementary details see Index No. 201.

STATE OF FLORIDA DEPARTMENT OF TRANSPORTATION
ROAD DESIGN

CURB INLET TYPE 7

	Names	Dates
Designed by	EGR	8/81
Drawn by	NSD	8/81
Checked by	JG	8/81

Approved By
Deputy Design Engineer, Roadways

F.H.W.A. Approved: 10/8/81

Revision No.	Sheet No.	Index No.
84	1 of 1	212

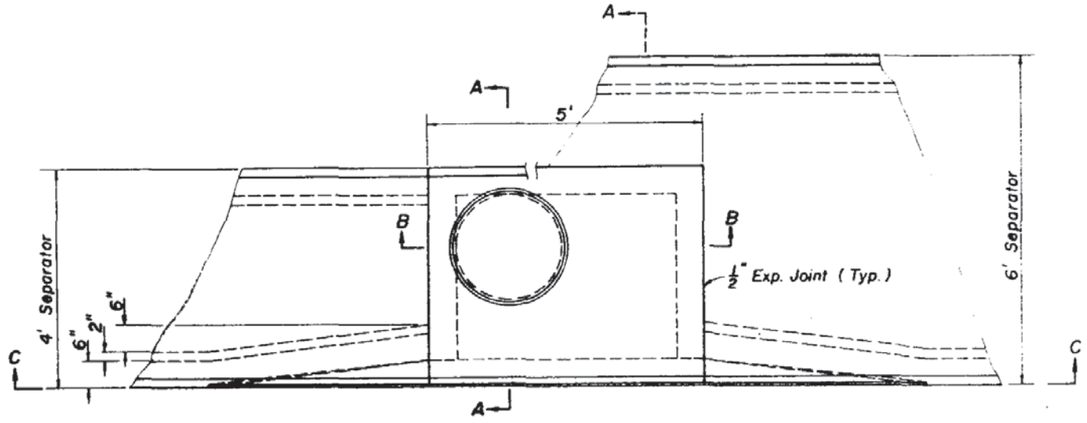

PLAN

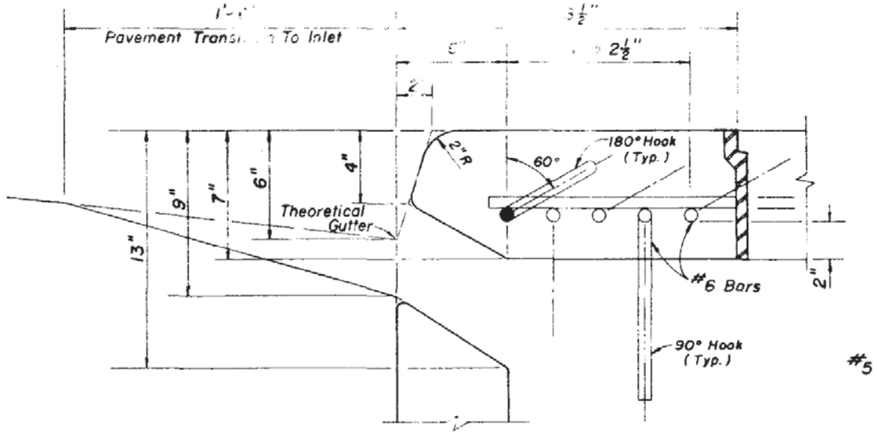

THROAT DETAIL (SECTION AA)

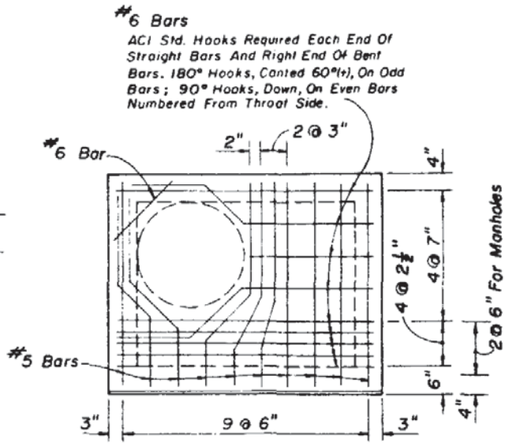

REINFORCING STEEL DIAGRAM
TOP SLAB OF INLET

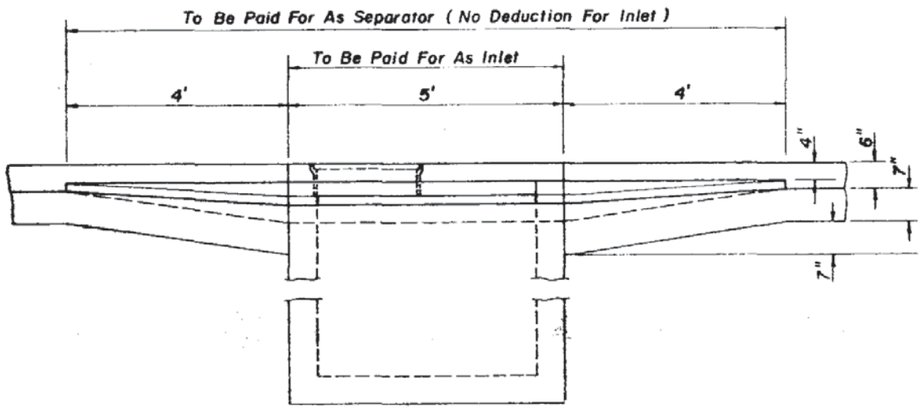

SECTION CC

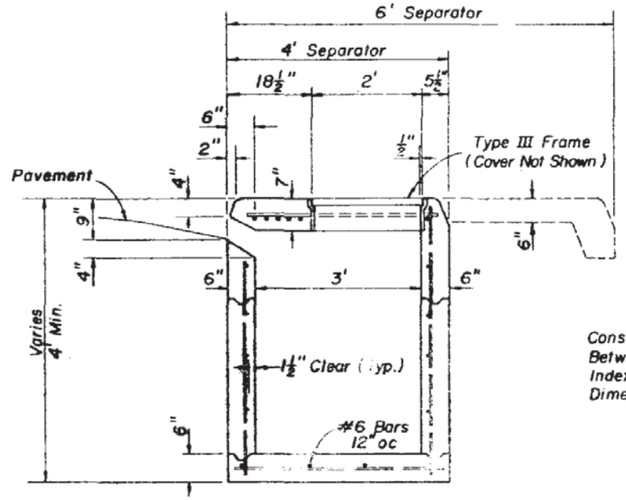

SECTION AA

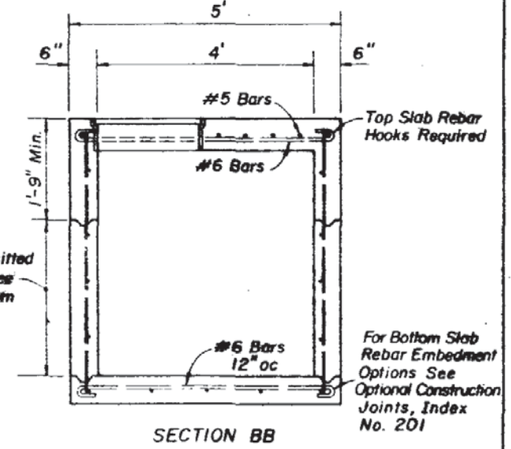

SECTION BB

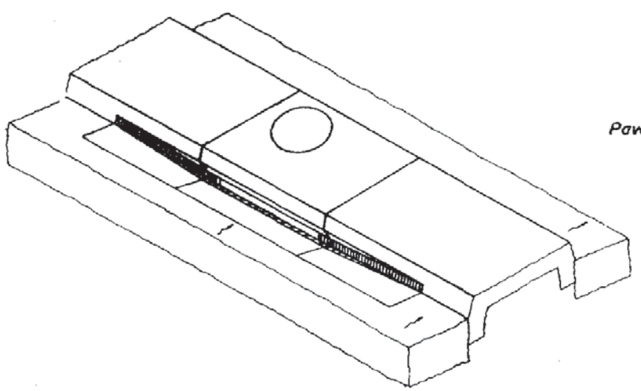

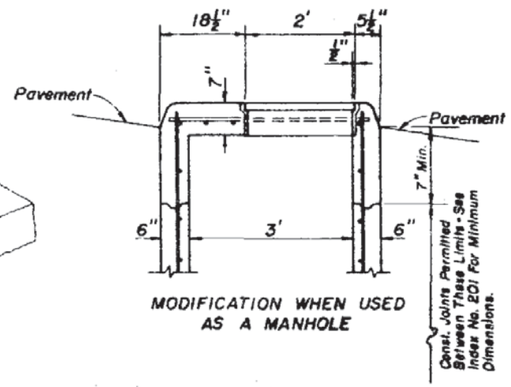

MODIFICATION WHEN USED AS A MANHOLE

GENERAL NOTES

1. This inlet is to be used only in Traffic Separators Types IV and V that are located in medians constructed with Curbs Types D and F. Use of this inlet on the through traffic side of the separator should be avoided in medians constructed with Curb Type D (Curb Inlets Types 9 or 10 are recommended). Locate inlet outside of pedestrian cross traffic.
2. Reinforcing - No. 4 bars @ 12" centers unless otherwise noted. Cut or bend bars out of way of pipe when necessary. Bars to clear pipe by 1½".
3. Recommended maximum pipe sizes are 24" longitudinal and 30" transverse. For larger pipe, inlets with bottoms Type J, Alt. B, Index No. 200 are recommended.
4. For supplemental details see Index No. 201.

STATE OF FLORIDA DEPARTMENT OF TRANSPORTATION
ROAD DESIGN

CURB INLET TYPE 8

	Names	Dates
Designed by	EGR	7/81
Drawn by	HSD	7/81
Checked by	JG	7/81
F.H.W.A. Approved: 10/8/81		

Approved By
County Design Engineer, Roadways

Revision No.	Sheet No.	Index No.
84	1 of 1	213

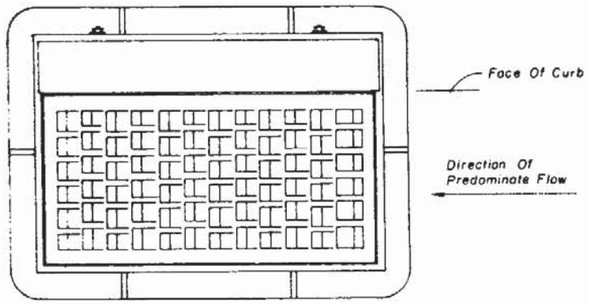

TOP VIEW

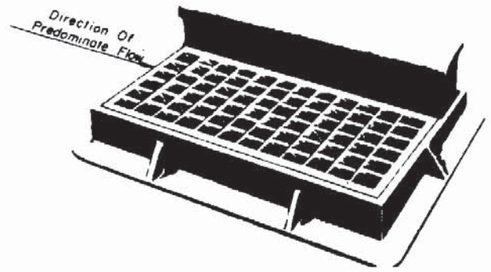

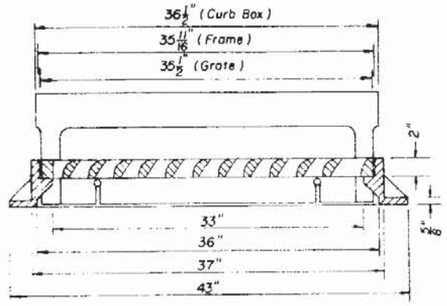

LONGITUDINAL SECTION

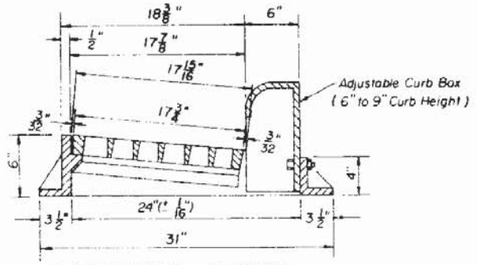

TRANSVERSE SECTION

FRAME AND GRATE

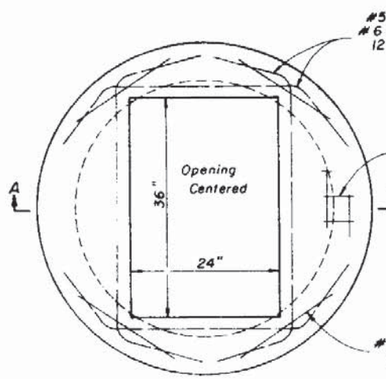

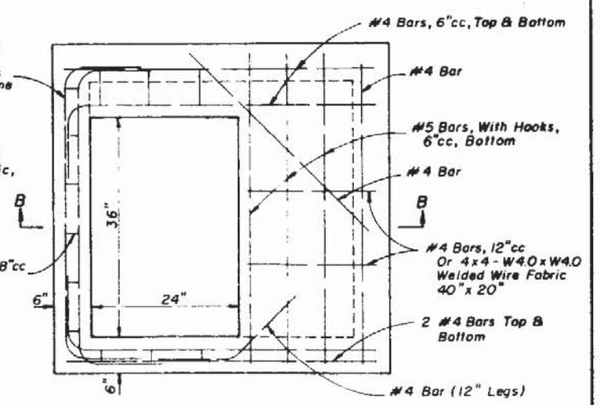

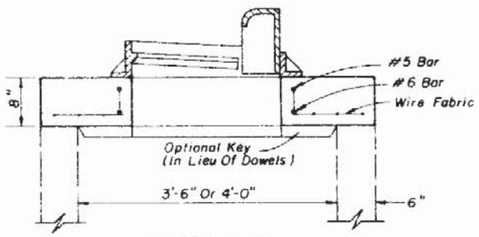

SECTION AA

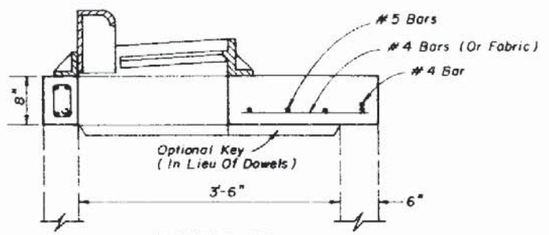

SECTION BB

FOR BOTTOM TYPE P & RISER TYPE J (ALTERNATES A)

FOR BOTTOM TYPE P & RISER TYPE J (ALTERNATES B)

TOP SLABS

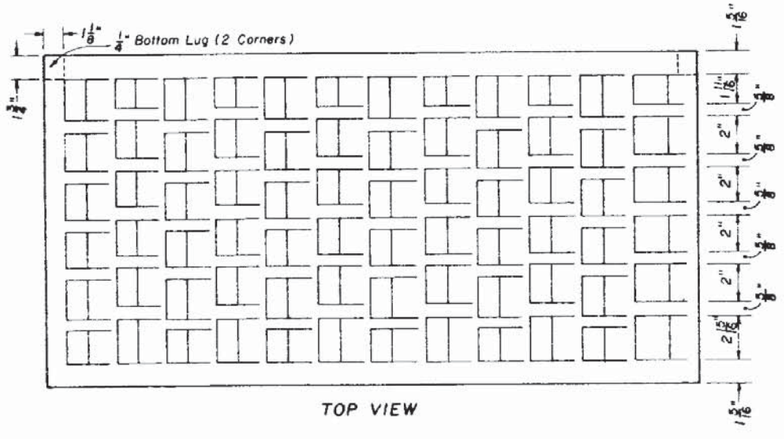

TOP VIEW

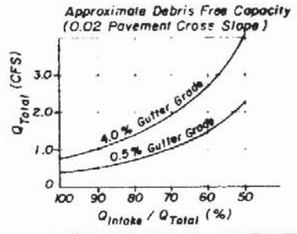

EFFICIENCY CURVE

GENERAL NOTES

1. This inlet is primarily intended for locations with light to moderate flows where right of way does not permit the use of throated Curb Inlets Types 1 through 6. The typical application is on curb returns to city streets. The inlet grate is suitable for pedestrian and bicycle traffic.
2. This inlet to be located in vertical faced curbs such as Curb and Gutter Type F. Grate shall be oriented with vanes directed toward predominate flow. Inlet to be located outside pedestrian crosswalk where practical.
3. For structure bottoms see Index No. 200. For supplemental details see Index No. 201.
4. All steel in slab tops shall have 1 1/4" minimum cover unless otherwise shown. Tops shall be either cast-in-place or precast concrete.
5. For Alternate B applications, top slab openings shall be placed such that 2 edges of inlet frame will be located directly above bottom or riser walls.
6. For bottom Type J applications without riser use top Type 7-T Index No 200. Form opening in top slab as detailed above.
7. Frame may be adjusted with one to six courses of brick.
8. Inlet and grate detail shown is Neenah R-3067-L. Vaned grates with approximately equal openings will be permitted that satisfy AASHTO H-20 loading. Inlet and grate shall be Class 30 castings in accordance with ASTM A 48. Grates shall be reversible, right or left.

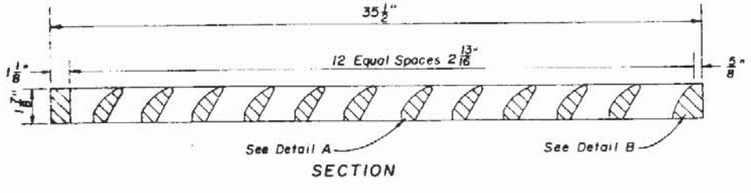

SECTION

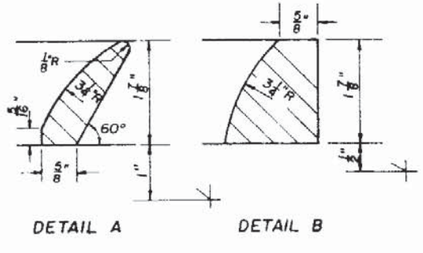

DETAIL A DETAIL B

GRATE DETAIL

STATE OF FLORIDA DEPARTMENT OF TRANSPORTATION
ROAD DESIGN

CURB INLET TOP TYPE 9

	Names	Dates
Designed by	EGH	
Drawn by	HSD	1/81
Checked by	JVG	1/81
F.H.W.A. Approved		10/8/81

Approved By
Deputy Design Engineer, Roadways

Revision No	Sheet No.	Index No
85	1 of 1	214

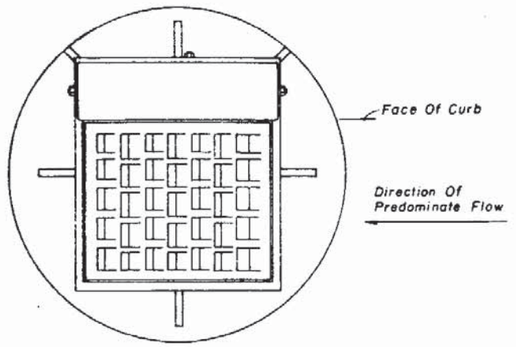

TOP VIEW

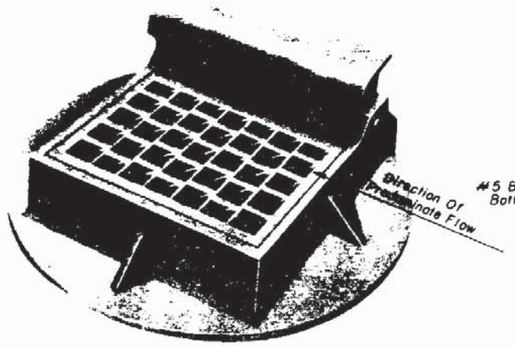

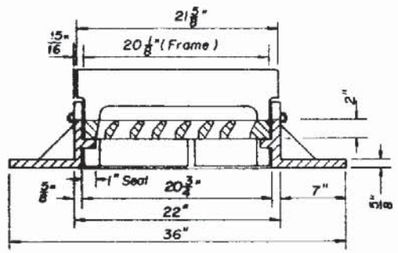

LONGITUDINAL SECTION

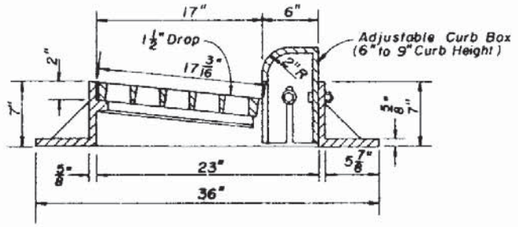

TRANSVERSE SECTION

FRAME AND GRATE

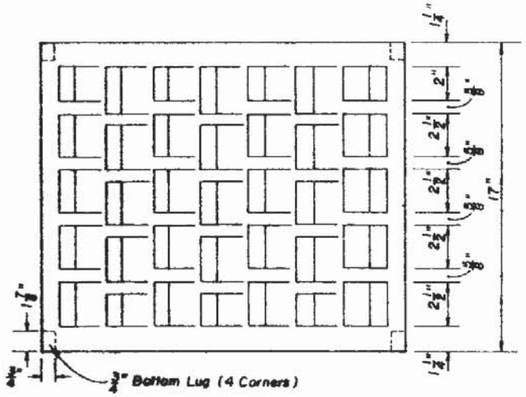

PLAN

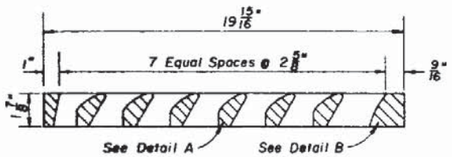

SECTION

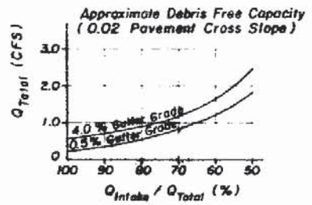

EFFICIENCY CURVE

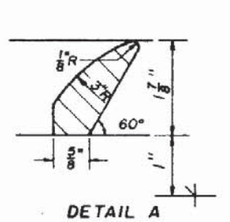

DETAIL A

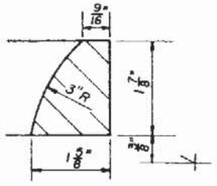

DETAIL B

GRATE DETAIL

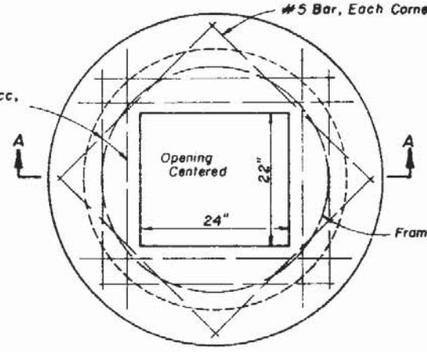

TOP VIEW

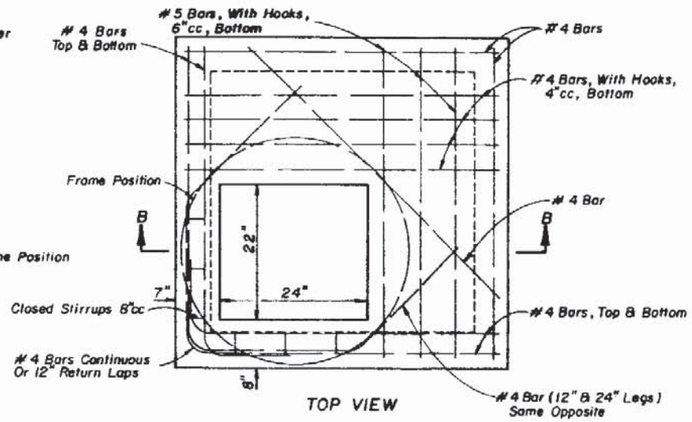

TOP VIEW

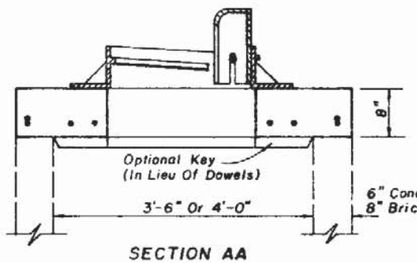

SECTION AA

FOR BOTTOM TYPE P & RISER TYPE J (ALTERNATES A)

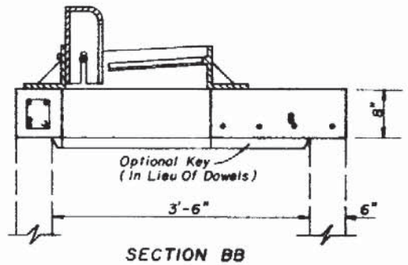

SECTION BB

FOR BOTTOM TYPE P & RISER TYPE J (ALTERNATES B)

TOP SLABS

GENERAL NOTES

1. This inlet is primarily intended for locations with light flows where right of way does not permit the use of throated Curb Inlets Types 1 through 5. The typical application is on curb returns to city streets. The inlet grate is suitable for pedestrian and bicycle traffic.
2. This inlet to be located in vertical faced curbs such as Curb and Gutter Type F. Grate shall be oriented with vanes directed toward predominate flow. Inlet to be located outside pedestrian crosswalk where practical.
3. For structure bottoms see Index No. 200. For supplemental details see Index No. 201.
4. All steel in slab tops shall have 1 1/4" minimum cover unless otherwise shown. Tops shall be either cast-in-place or precast concrete.
5. For Alternate B applications, top slab openings shall be placed such that 2 edges of inlet frame will be located directly above bottom or riser walls.
6. For bottom Type J applications without riser use top Type 7-T Index No. 200. Form opening in top slab as detailed above.
7. Frame may be adjusted with one to six courses of brick.
8. Inlet and grate detail shown is Neenah R-3065-L. Vaned grates with approximately equal openings will be permitted that satisfy AASHTO H-20 loading. Inlet and grate shall be Class 30 castings in accordance with ASTM A 48. Grates shall be reversible, left or right.

STATE OF FLORIDA DEPARTMENT OF TRANSPORTATION
ROAD DESIGN

CURB INLET TOP TYPE 10

	Name	Date
Designed by	EGR	
Drawn by	HSD	1/81
Checked by	JVG	1/81
F.H.W.A.	Approved: 10/8/81	

Approved By
Deputy Design Engineer, Roadways

Revision No.	Sheet No.	Index No.
86	1 of 1	215

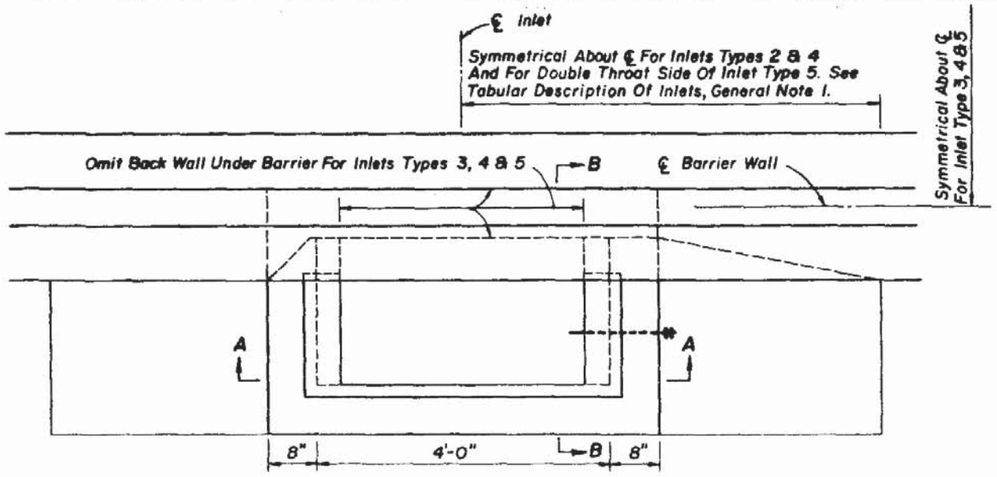

PLAN (INLETS TYPES 1 THRU 5)

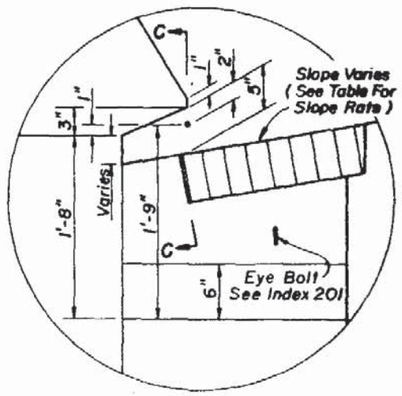

INSET A

GRATE SLOPE		
Shoulder Slope	Grate Slope Rate	Remarks
0.03	6.7 : 1	Std. Med. Conc. Shldr.
0.05	6 : 1	Std. Med. Flex. Shldr.
0.06	5.6 : 1	
0.07	5.2 : 1	
0.08	5 : 1	
0.09	4.7 : 1	
0.10	4.5 : 1	e (max)

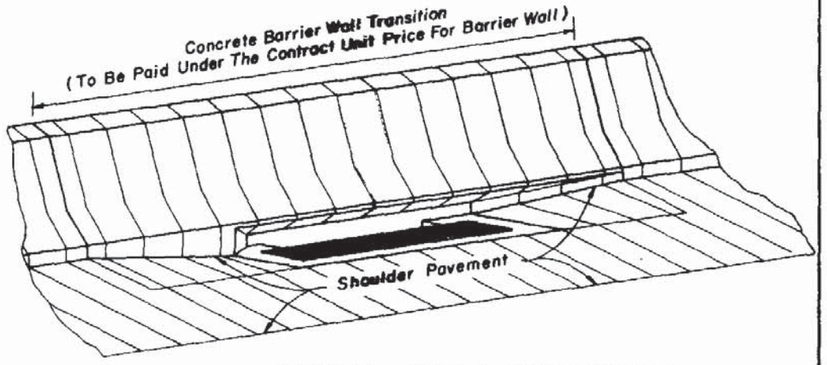

PICTORIAL VIEW (TYPE 1 SHOWN)

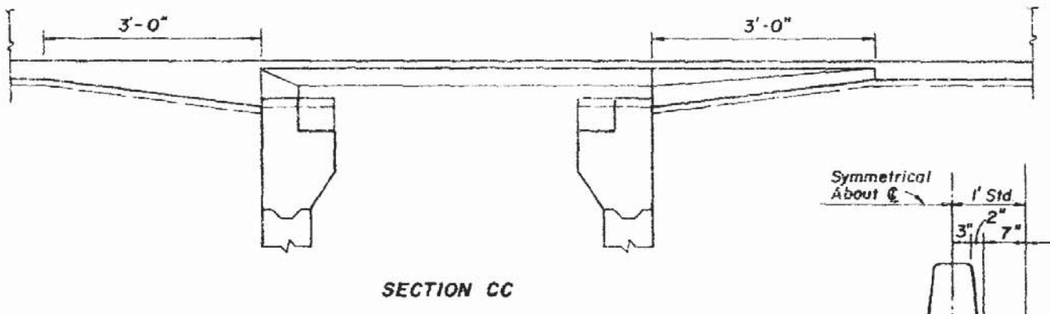

SECTION CC

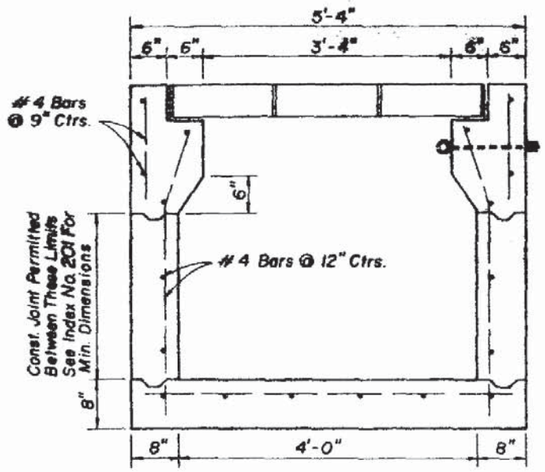

SECTION AA

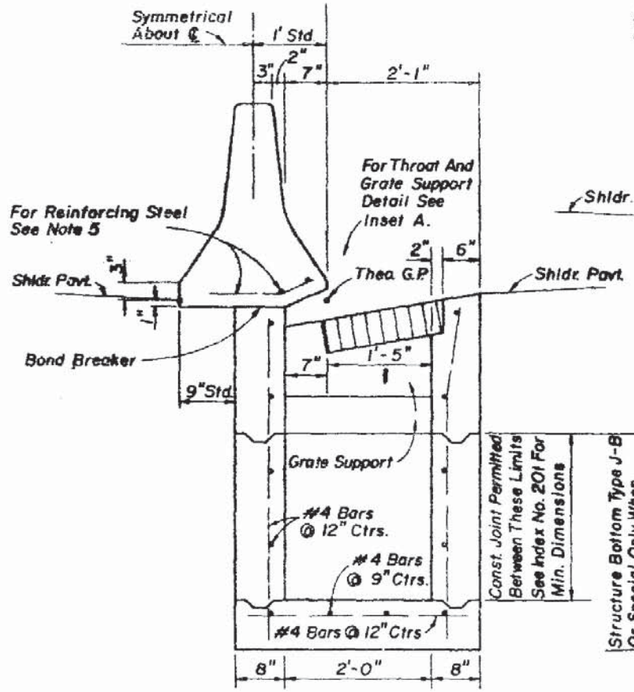

SECTION (INLETS TYPES 1 & 2)

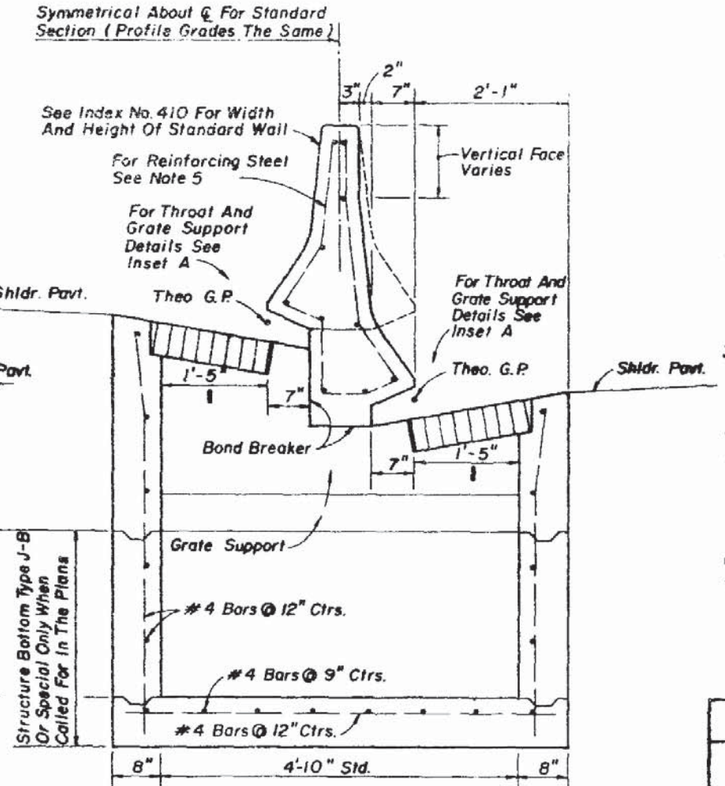

SECTION (INLETS TYPES 3, 4 & 5)
(NON-SYMMETRICAL SECTION SHOWN)

GENERAL NOTES

1. Inlet Descriptions:
   - Type 1 Single throat, one side of barrier wall.
   - Type 2 Double throats, one side of barrier wall.
   - Type 3 Two single throats, opposite sides of barrier wall.
   - Type 4 Two double throats, opposite sides of barrier wall.
   - Type 5 Double throats, one side of barrier wall, and single throat other side of barrier wall.
2. For grate details see Index No. 220. The parallel bar grate shall be used unless the reticuline grate is called for in the plans. The reticuline grate shall be specified where bicycle traffic is anticipated.
3. For standard concrete barrier wall dimensions, and for dimensions of concrete barrier wall incorporating light standards within the wall, see Index No. 410.
4. Reinforcing steel shall have 2" minimum cover.
5. All reinforcing steel # 4 bars. Longitudinal steel bars extend over full length of concrete barrier wall transition. Tie bars @ 12" ctrs. Reinforcing to be paid for under the contract unit price for concrete barrier wall.
6. For supplemental details see Index No. 201.
7. Inlets to be paid for under the contract unit price for Inlets (MB) (Type 1, 2, 3, 4, or 5), each. Barrier wall to be paid for under the contract unit price for Concrete Barrier Wall, L.F.

STATE OF FLORIDA DEPARTMENT OF TRANSPORTATION
ROAD DESIGN

MEDIAN BARRIER INLETS TYPES 1, 2, 3, 4, & 5

	Names	Dates
Designed by		
Drawn by	HSO	6/83
Checked by	JVG/JBW	7/83
F.H.W.A. Approved: 10/6/83		

Approved By: State Design Engineer, Roadways

Revision No.	Sheet No.	Index No.
85	1 of 1	217

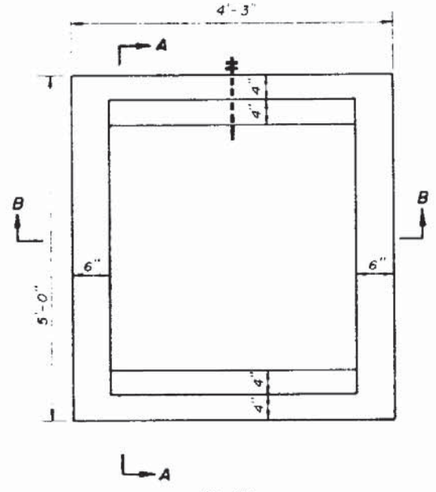

PLAN
(Without Grate)

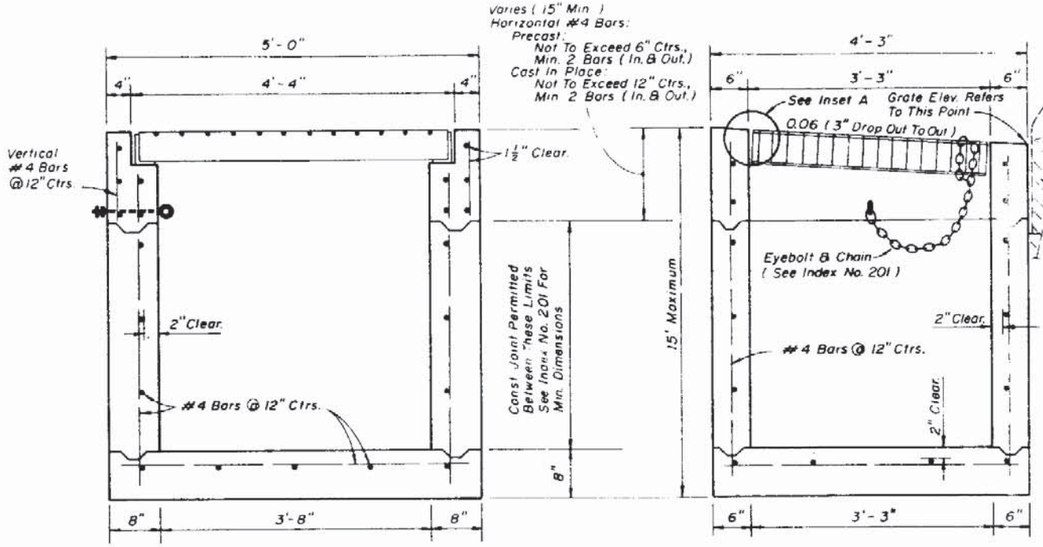

SECTION AA

SECTION BB

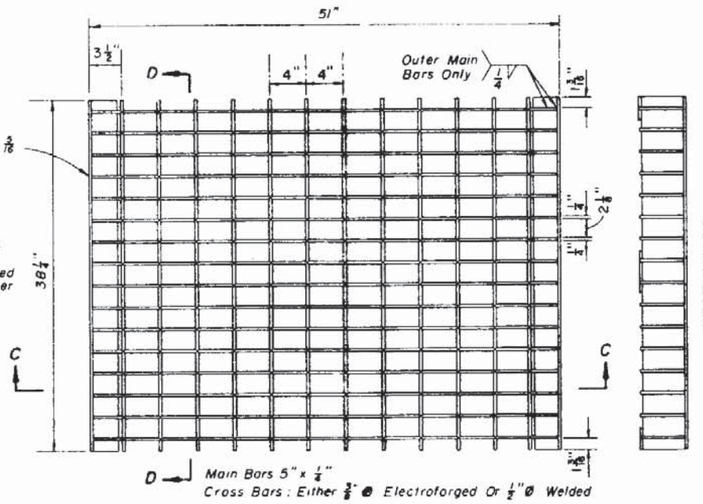

TOP VIEW

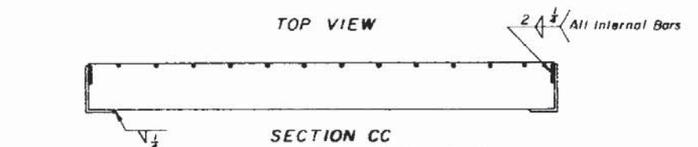

SECTION CC

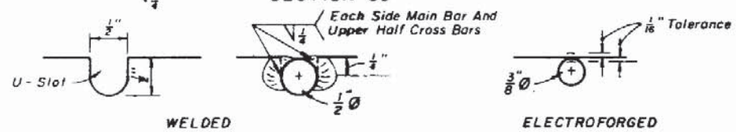

WELDED ELECTROFORGED

CROSS BAR OPTIONS

STEEL GRATE

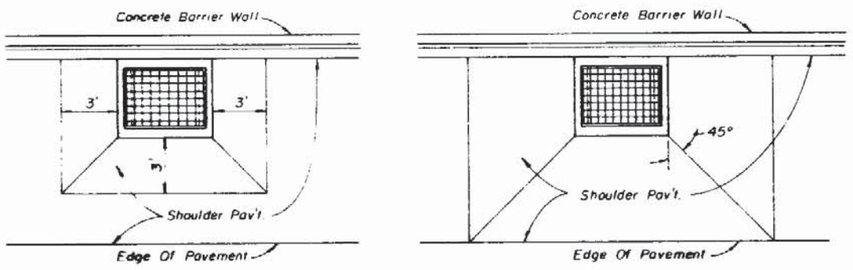

LOW SIDE SUPERELEVATION HIGH SIDE TRANSITION

PAVEMENT WARP FOR SHOULDERS IN SUPERELEVATION

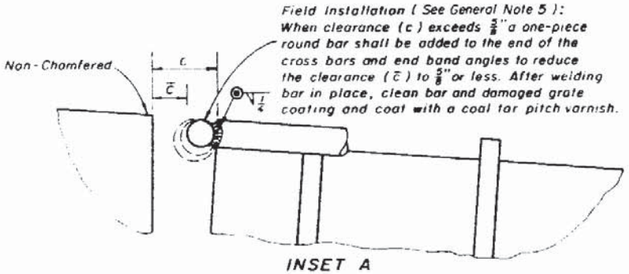

INSET A

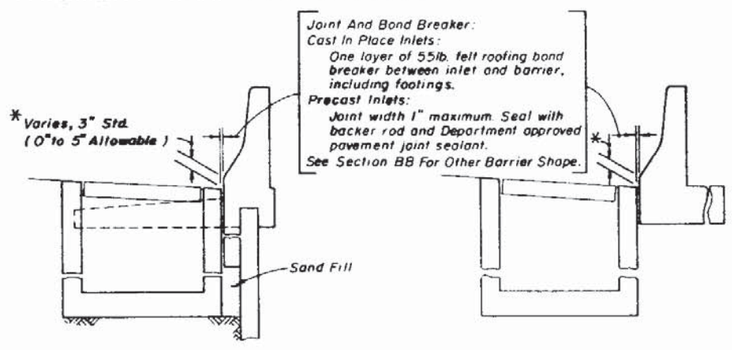

BARRIER WALL / RETAINING WALL SINGLE FACE ROADWAY BARRIER

INLET SECTION AT WALLS

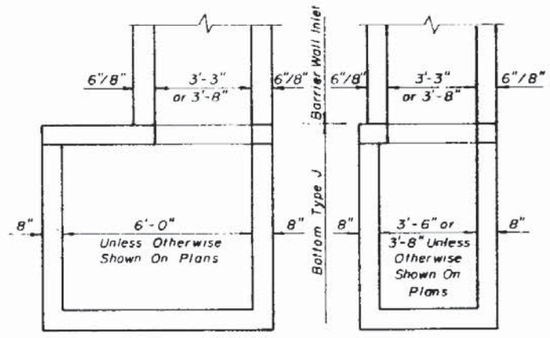

Note: Structure Bottom Type J, Alt. B Only See Index No. 200.

INLET WITH BOTTOM TYPE J

GENERAL NOTES

1. This inlet is primarily intended for use adjacent to concrete barrier walls on paved shoulders. Use of the inlet adjacent to other wall types shall be approved by the Drainage Engineer. The inlet is suitable for bicycle and occasional pedestrian traffic. It is not intended for use in curb and gutter or other areas where throated inlets are required, nor areas subject to high debris.
2. Inlets located in embankments constructed with earth anchored retaining wall shall be designed with minimum depths to reduce adverse impact on the anchorage system. Runs of pipe parallel to and near anchored wall shall be avoided wherever practical. Special coordination must be exercised during the design and construction of storm water systems within anchored wall systems.
3. Inlet bottoms and/or tops may be either precast or cast-in-place.
4. Exposed edges shall be chamfered ¾".
5. When Alternate G grate is specified in the plans, the grate is to be hot dipped galvanized after fabrication. Field installation of the filler bar called for in Inset A will not be permitted, thereby requiring tolerance adjustment during fabrication and/or casting, or, matching grate to structure prior to galvanizing.
6. For supplemental details see Index Nos. 200 and 201.

STATE OF FLORIDA DEPARTMENT OF TRANSPORTATION
ROAD DESIGN

BARRIER WALL INLET

	Names	Dates
Designed by	EGR	8/85
Drawn by	HSD	8/85
Checked by	JVG/JBW	8/85
F.H.W.A. Approved:		

Approved By
State Design Engineer, Roadways

Revision No.	Sheet No.	Index No.
86	1 of 1	218

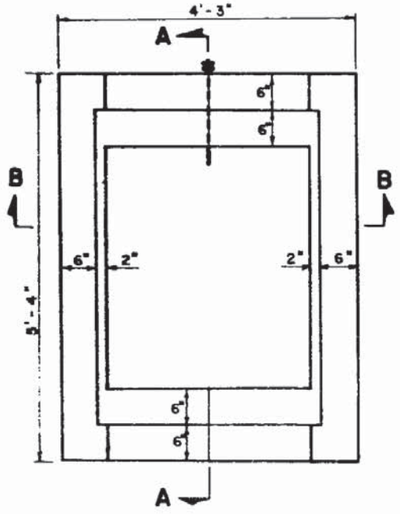

PLAN
(Without Grate)

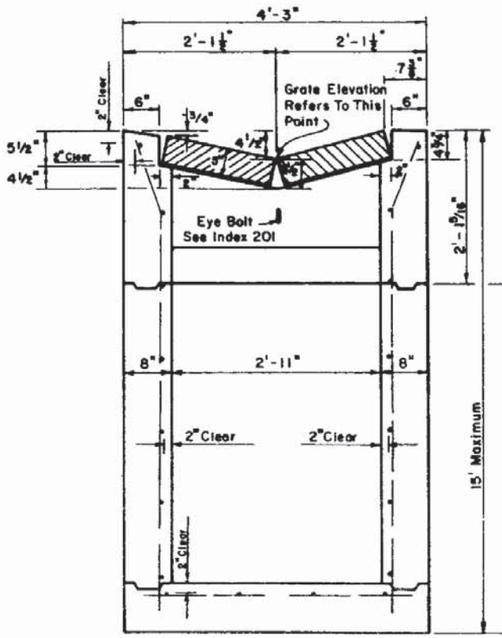

SECTION BB

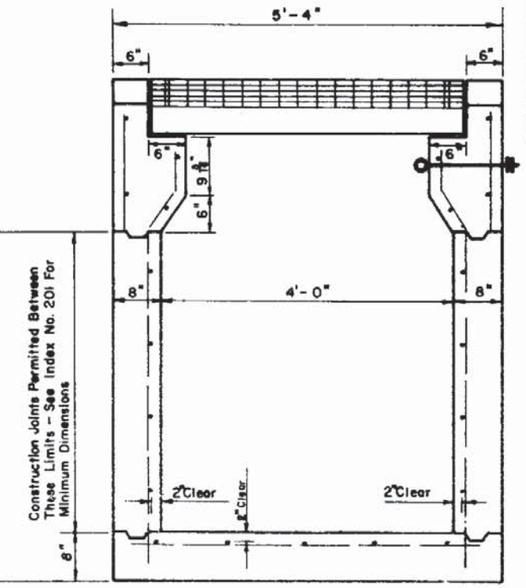

SECTION AA

RECOMMENDED MAXIMUM PIPE SIZES	
INLET INSIDE WIDTH	PIPE SIZE
2'-11"	24"
4'-0"	36"

Note: Recommended sizes are for concrete pipe. Sizes for other types of pipe must be verified for fit in accordance with Index No. 201. For larger pipe see bottom Type J detail right and Index No. 200.

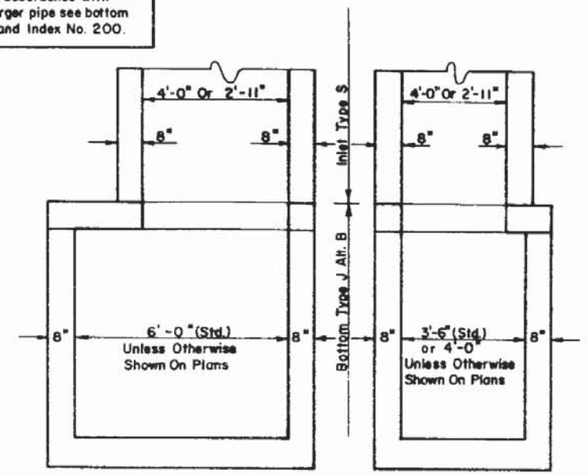

See Index No. 200
INLET WITH BOTTOM TYPE J

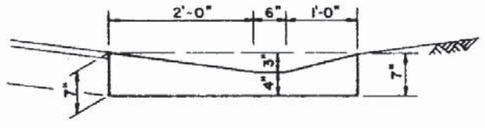

SECTION DD

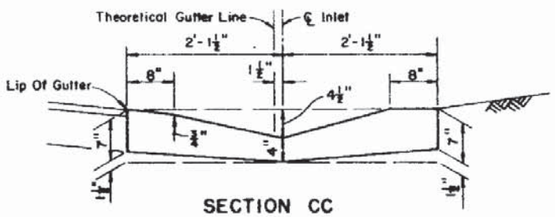

SECTION CC

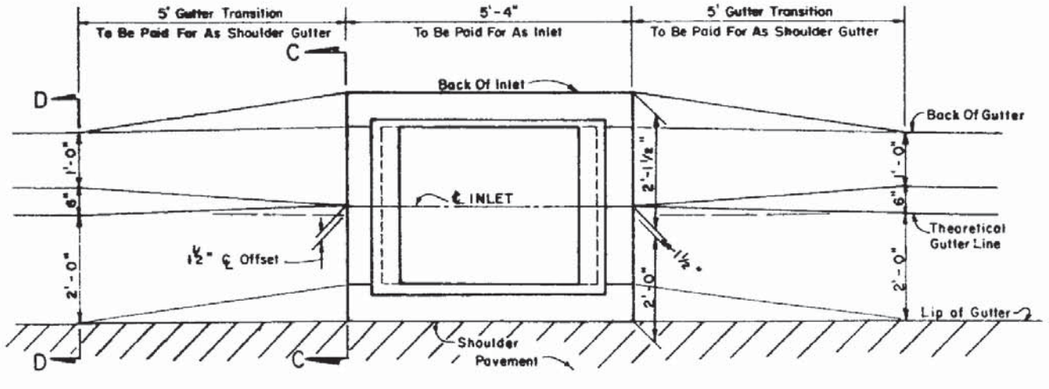

SHOULDER GUTTER TRANSITION

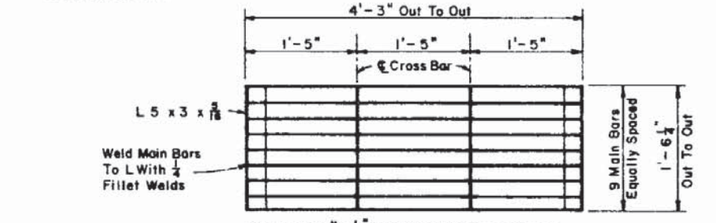

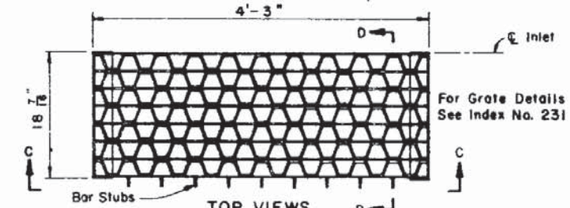

TOP VIEWS

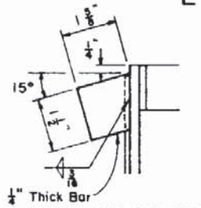

DETAIL OF BAR STUB



SECTION DD

SECTION CC

STEEL GRATE

GENERAL NOTES

1. This inlet with parallel bar grate shall be used for limited access facilities and other bicycle restricted facilities subject to heavy loads; and, may be used in locations where inlets Types A and B, with wide grate opening, are unacceptable. On limited access facilities with designated bicycle access and on all other facilities, including roads overpassing limited access highways, the reticuline grate shall be used.
2. Reinforcing steel all No.4 bars at 12" centers both ways with 2" clearance to inside of walls and bottom. Bars to be cut or bent for 1½ minimum clearance around pipe.
3. All exposed edges and corners shall be tooled to ¾" radius.
4. When Alternate G grate is specified in plans, the grate is to be hot dipped galvanized after fabrication.
5. For supplementary details see Index Nos. 200 and 201.

STATE OF FLORIDA DEPARTMENT OF TRANSPORTATION
ROAD DESIGN

GUTTER INLET TYPE S

	Name	Date
Designed by		
Drawn by		
Checked by		

Approved By
Deputy Design Engineer, Roadways

F.H.W.A. Approved: 5/1/75

Revision No.	Sheet No.	Index No.
84	1 of 1	220

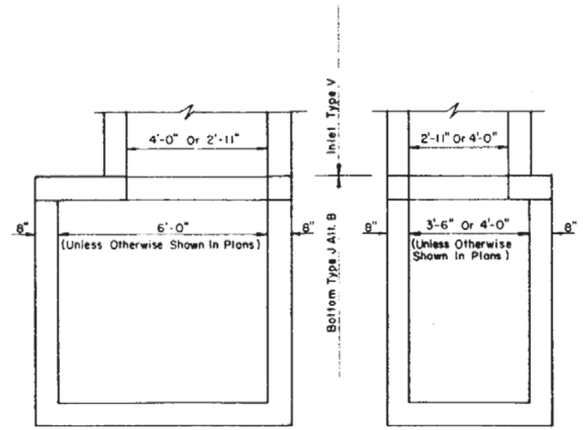

Note: Structure Bottom Type J, Alt. B Only. See Index No. 200.

INLET WITH BOTTOM TYPE J

(For Pipes 30" Dia. And Larger)

GENERAL NOTES

1. This inlet is designed for village swales, ditches, or other areas subject to heavy wheel loads, minimum debris and subject to pedestrian and/or bicycle traffic.
2. When alternate "G" grate is specified in plans, the grate is to be hot dipped galvanized after fabrication.
3. Reinforcing – No. 4 bars a 12" ctrs. both ways. Cut or bend bars out of way of pipe to clear pipe $1\frac{1}{2}$".
4. All exposed edges and corners shall be tooled to $\frac{1}{4}$" radius.
5. For supplementary details see Index No. 201.

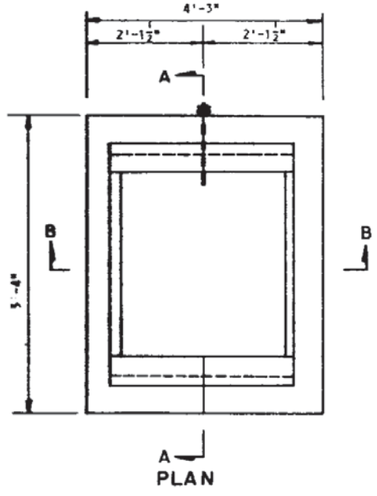

PLAN

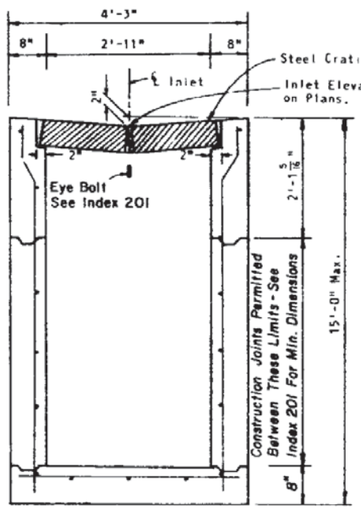

SECTION BB

(For Pipes 24" Dia. And Under)

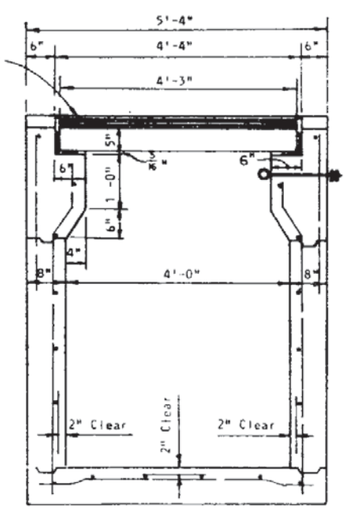

SECTION AA

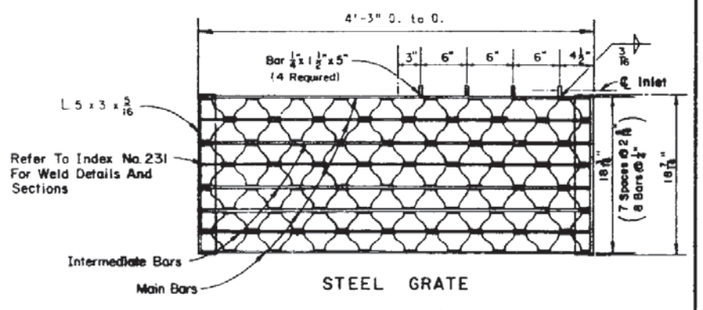

STEEL GRATE

TWO REQUIRED PER INLET

5" Steel Grate Main Bars 5"x¼"

Intermediate Bars 1½"x¼" Reticuline Bars 1¼"x3/16"

STEEL GRATE : MANUFACTURED BY BORDEN, FLORIDA STEEL, U.S. FOUNDRY IRVING, RELIANCE, GREULICH (OR EQUAL).

STATE OF FLORIDA DEPARTMENT OF TRANSPORTATION
ROAD DESIGN

GUTTER INLET TYPE V

	Names	Dates
Designed by		
Drawn by	WHW	4/57
Checked by	RMM	4/57

F.H.W.A. Approved: 5/1/75

Approved By

Deputy Design Engineer, Roadways

Revision No.	Sheet No.	Index No.
84	1 of 1	221

APPLICATION AND SELECTION GUIDE FOR DITCH BOTTOM AND MEDIAN INLETS

INDEX NO.	TYPE	LOCATION	CAPACITY (CFS)			SAFETY			DEBRIS TOLERANCE	PIPE SIZE LIMITATION		OTHER DESIGN CONSIDERATIONS
			GRATE ONLY	GRATE WITH SINGLE STD. SLOT	GRATE WITH SINGLE TRAV. SLOT	TRAFFIC	PEDESTRIAN	BICYCLE		INLET INSIDE WIDTH	MAXIMUM PIPE SIZE	
230	A	Limited Access Facilities	5	—	—	Heavy Wheel Loads	No	No	Good	2'-0" 3'-1"	18" 24"	
231	B	Limited Access Facilities	16	—	—	Heavy Wheel Loads	No	No	Excellent	3'-8" 4'-2"	30" 36"	
232	C	Outside CZ	6	** 15	** 10	Infrequent Traffic	Yes	Yes	* Poor	2'-0" 3'-1"	18" 24"	* See Note 4. ** See Note 8.
	D	Outside CZ	12	** 31	** 20	Infrequent Traffic	Yes	Yes	* Poor	3'-1" 4'-1"	24" 36"	* See Note 4. ** See Note 8.
	E	Outside CZ	13	** 27	** 19	Infrequent Traffic	Yes	Yes	* Poor	3'-0" 4'-6"	24" 42"	* See Note 4. ** See Note 8.
	H	Outside CZ	19	** 33	—	Infrequent Traffic	Yes	Yes	* Poor	3'-0" 7'-8"	24" 66" Or 2-30"	* See Note 4. ** See Note 8.
233	F	Inside CZ	** 8	—	—	Heavy Wheel Loads	Yes	Yes	Poor	2'-0" 4'-0"	18" 36"	** See Note 8.
	G	Inside CZ	21	—	—	Heavy Wheel Loads	Yes	Yes	Poor	4'-4" 5'-0"	36" 42"	
234	J	Inside CZ	10	—	—	Heavy Wheel Loads	Yes	No	Fair	2'-11" 4'-0"	24" 36"	
235	K	Outside CZ	—	—	—	NA	NA	NA	Good	3'-8" See Index	36"	Debris buildup may occur on Type B fencing.

GENERAL NOTES

1. All inlets must be selected to satisfy hydraulic suitability, with proper consideration given to safety and economics.
2. CZ denotes clear zone, formerly CRA denoting clear recovery area.
3. Alternate G grates should be specified when in salt water environment.
4. Inlets C, D and E capacity and debris tolerance may be increased by the addition of a slot. Slotted inlets located within roadway clear zones and in areas accessible to pedestrians shall have traversable slots. Traversable slots are not adaptable to Inlet Type H.
5. Special ditch blocks require plan details.
6. Pipe size limitations are based on circular Class III, B Wall, Concrete Pipe. Eliptical pipe and corrugated pipe are to be checked for fit in accordance with Index No. 201; metal pipe sizes should be reviewed using $2\frac{2}{3}$" x $\frac{1}{2}$" corrugation up through 30" and 3" x 1" corrugation for larger sizes.
7. The figures shown for capacity are approximate, and are intended as a guide to assist in describing relative performance:
   (a) Inlets with grates only are considered to be 50% blocked with 3" of ponding.
   (b) Standard 12" slots and traversable slots are calculated assuming a 25% blockage and 3" of ponding above the grate.
8. The capacity values assume inlet control. The designer must verify the outlet conditions and design assumptions before accepting the capacity values shown; outlet constraints are likely to control with minimum pipe sizes.

STATE OF FLORIDA DEPARTMENT OF TRANSPORTATION
ROAD DESIGN

DITCH BOTTOM AND MEDIAN INLET SELECTION GUIDE

	Names	Dates
Designed by	EGR	9/6/84
Drawn by	HSD	9/6/84
Checked by	EGR	9/6/84
F.H.W.A. Approved		9/21/84

Approved By _____
State Design Engineer, Roadways

Revision No.	Sheet No.	Index No.
86	1 of 1	229

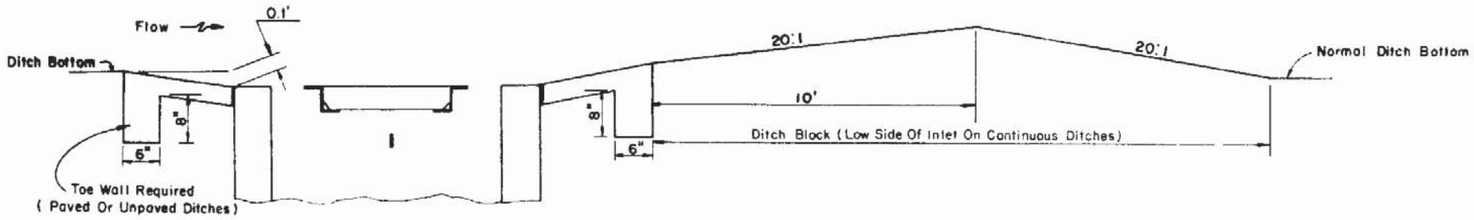

SECTION DD

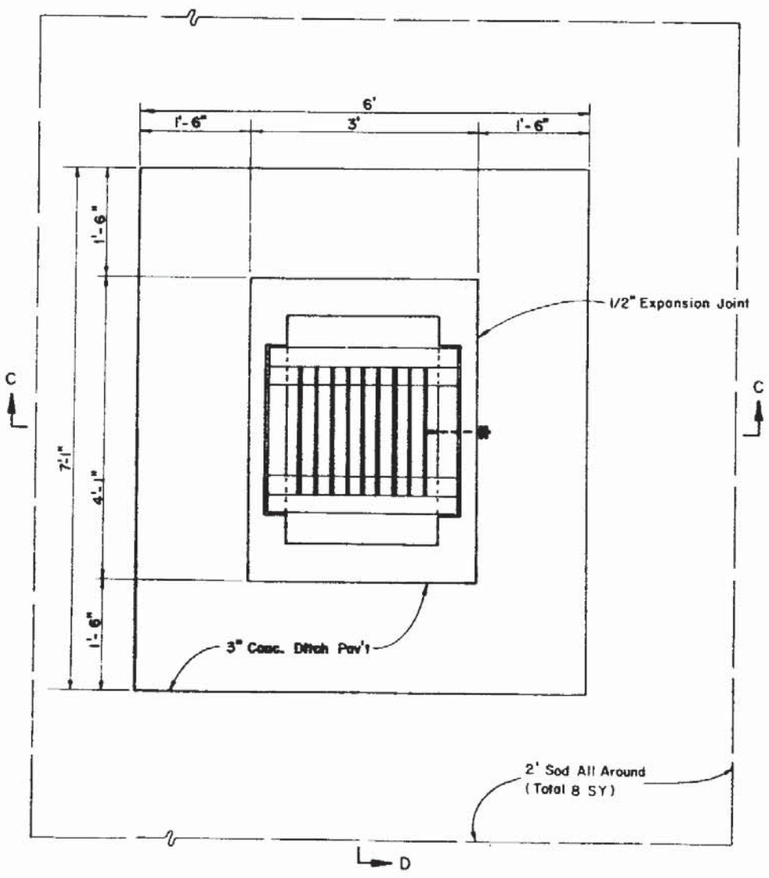

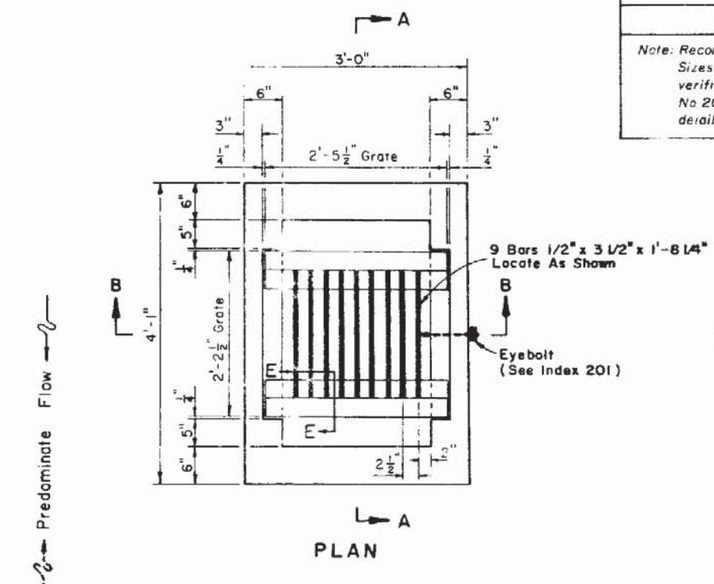

PLAN

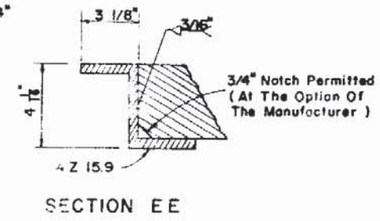

SECTION EE

RECOMMENDED MAXIMUM PIPE SIZES	
INLET INSIDE WIDTH	PIPE SIZE
2'-0"	18"
3'-1"	24"

Note: Recommended sizes are for concrete pipe. Sizes for other types of pipe must be verified for fit in accordance with Index No. 201. For larger pipe see bottom Type J detail right and Index No. 200.

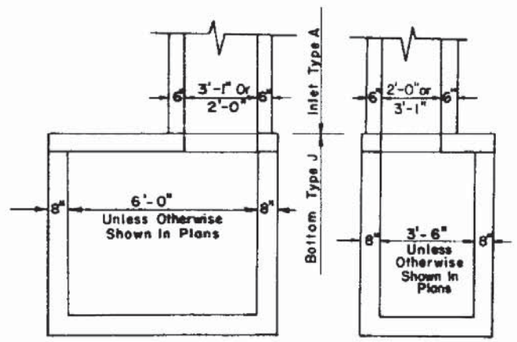

Note: Structure Bottom Type J, Alt. B only. See Index No. 200.

INLET WITH BOTTOM TYPE J

GENERAL NOTES

1. This inlet is designed for ditches, medians, or other areas subject to heavy wheel loads on limited access facilities where debris may be a problem and flow through this grate is less than 7 cfs. NOTICE: This inlet is not for use in areas subject to pedestrian and/or bicycle traffic.
2. Reinforcing – No. 4 bars at 12" center both ways, 2" clearance to inside face. Cut or bend bars out of way of pipe to clear pipe by 1½".
3. Chamfer exposed edges (¾" Chamfer).
4. When alternate "G" grate is specified in plans, the grate is to be hot dipped galvanized after fabrication.
5. Cost of ditch paving to be included in cost of Inlet. Sodding to be paid for under contract unit price for Sodding, SY.
6. For supplemental details see Index No. 201.

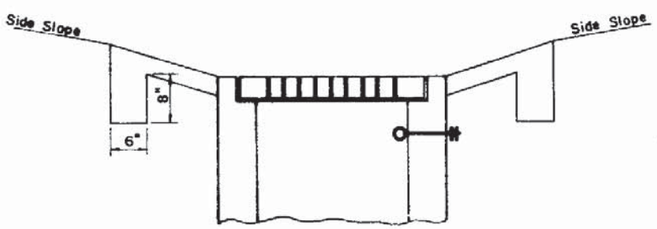

SECTION CC

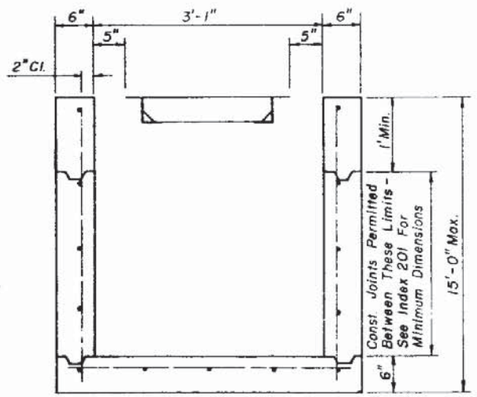

SECTION AA

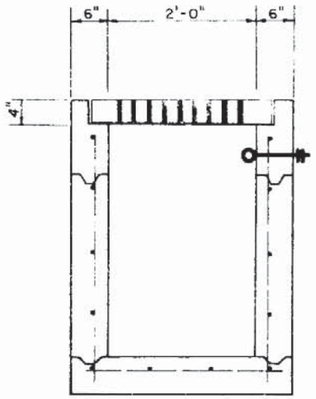

SECTION BB

STATE OF FLORIDA DEPARTMENT OF TRANSPORTATION
ROAD DESIGN

DITCH BOTTOM INLET TYPE A

Names	Dates
Designed by	
Drawn by	
Checked by	

Approved By _____ Deputy Design Engineer, Roadways

F.H.W.A. Approved: 7/18/75

Revision No.	Sheet No.	Index No.
86	1 of 1	230

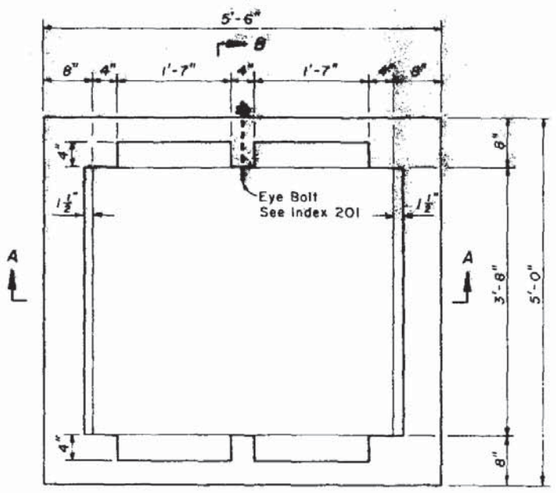

PLAN
(Grate Not Shown)

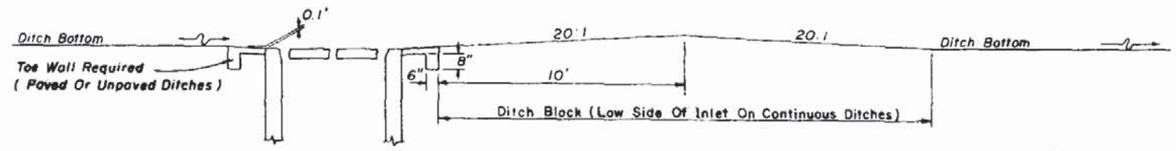

SECTION EE

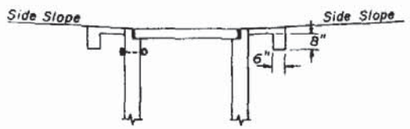

SECTION FF

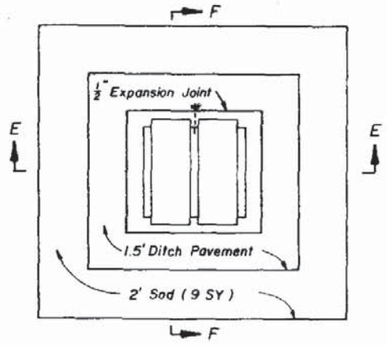

SODDING, PAVEMENT AND DITCH BLOCK

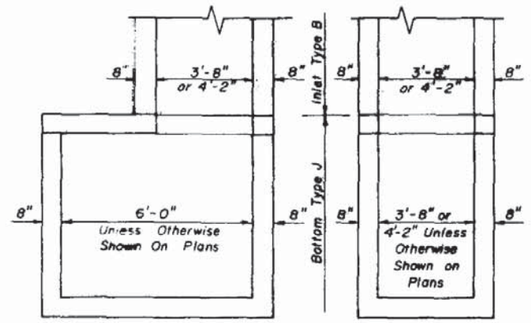

Note: Structure Bottom Type J, Alt. B Only. See Index No. 200

INLET WITH BOTTOM TYPE J

RECOMMENDED MAXIMUM PIPE SIZES	
INLET INSIDE WIDTH	PIPE SIZE
3'-8"	30"
4'-2"	36"

Note: Recommended sizes are for concrete pipe. Sizes for other types of pipe must be verified for fit in accordance with Index No. 201. For larger pipe see bottom Type J detail above and Index No. 200.

GENERAL NOTES

1. **NOTICE**: Inlet intended for use only on that portion of limited access facilities not subject to pedestrian and / or bicycle traffic.
2. Inlet designed for ditches, medians or other areas subject to heavy wheel loads, where debris may be a problem, and inlet intake is 7 cfs or more.
3. Reinforcing steel all No. 4 bars at 12" centers both ways with 2" clearance to inside of walls and bottom. Bars to be cut or bent for 1½ minimum clearance around pipe.
4. When alternate G grates are specified in the plans, the grates are to be hot dipped galvanized after fabrication.
5. Ditch paving to be included in cost of inlet. Sodding to be paid for under the contract unit price for Sodding SY.
6. For supplementary details see Index No. 201.

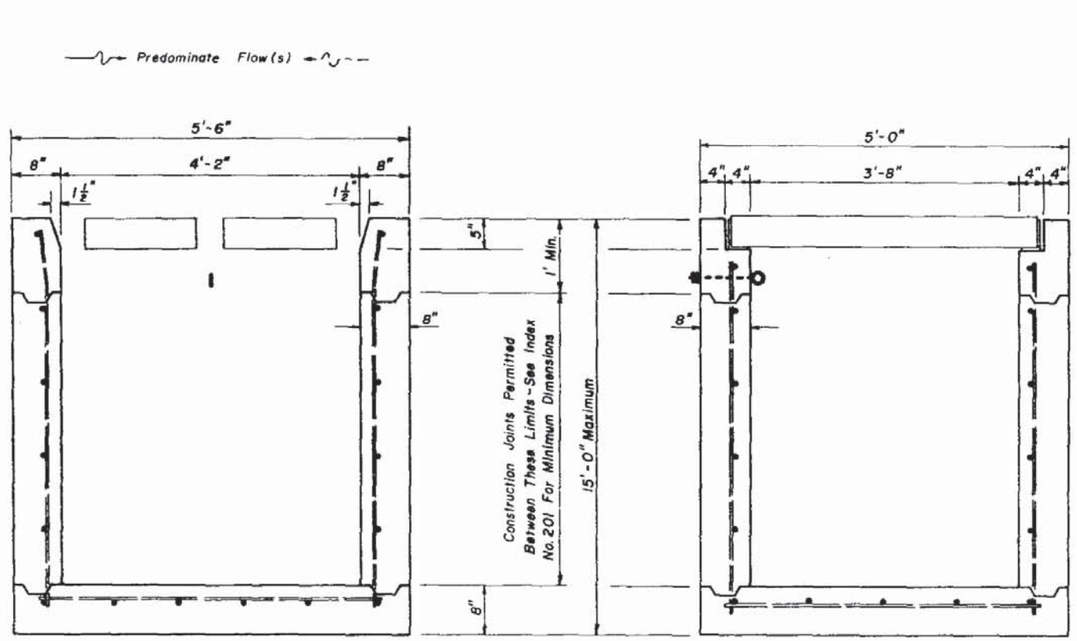

SECTION AA

SECTION BB

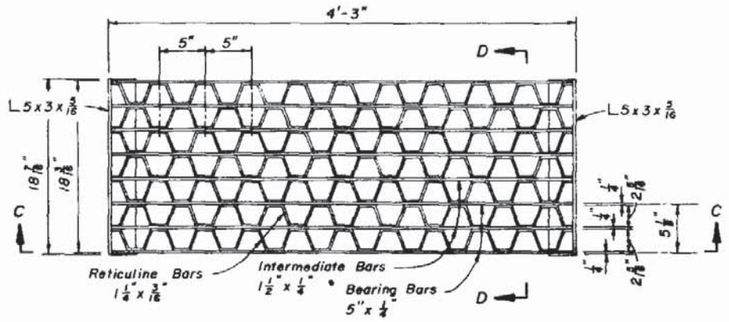

PLAN

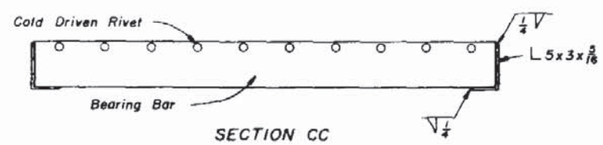

SECTION CC

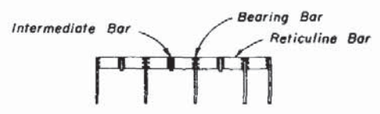

SECTION DD

STEEL GRATE

STATE OF FLORIDA DEPARTMENT OF TRANSPORTATION
ROAD DESIGN

DITCH BOTTOM INLET TYPE B

	Names	Dates
Designed by	HAB	4/67
Drawn by	RWR	5/82
Checked by	JVG	5/82
F.H.W.A. Approved:		7/18/75 9/23/82

Approved By
State Design Engineer, Roadways

Revision No.	Sheet No.	Index No.
86	1 of 1	231

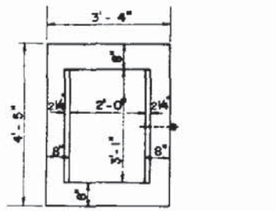

PLAN

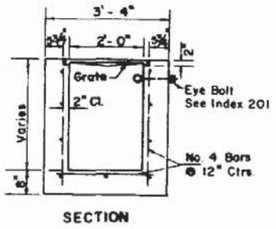

SECTION

TYPE C

Recommended Maximum Pipe Size:

2'-0" Wall - 18" Pipe
3'-1" Wall - 24" Pipe

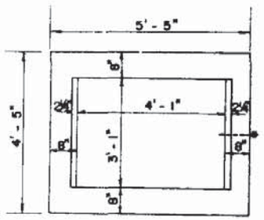

PLAN

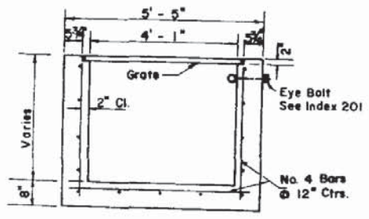

SECTION

TYPE D

Recommended Maximum Pipe Size:

3'-1" Wall - 24" Pipe
4'-1" Wall - 36" Pipe

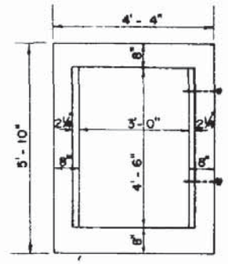

PLAN

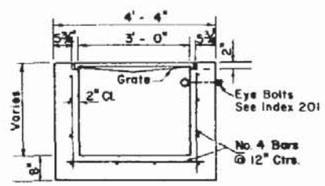

SECTION

TYPE E

Recommended Maximum Pipe Size:

3'-0" Wall - 24" Pipe
4'-6" Wall - 42" Pipe

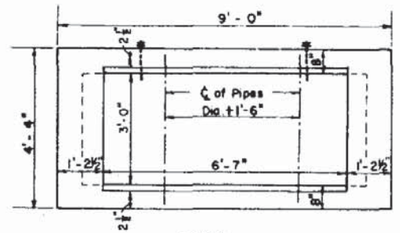

PLAN

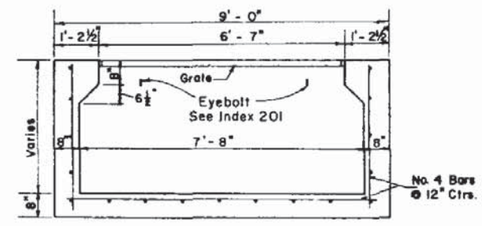

SECTION

TYPE H

Recommended Maximum Pipe Size:

3'-0" Wall - 24" Pipe
7'-8" Wall - 1 - 66" Pipe
2 - 30" Pipe

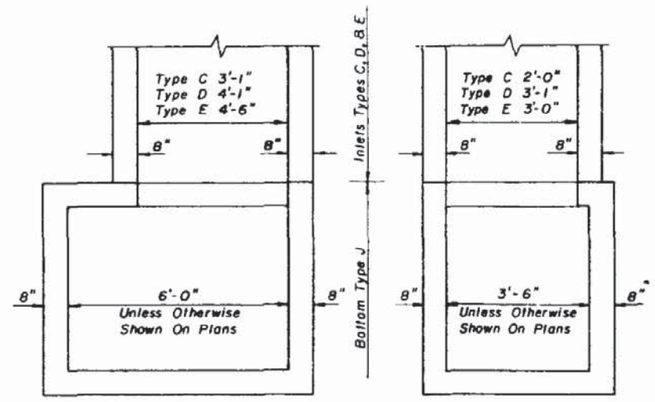

Note: Structure Bottom Type J, Alt. B Only: See Index No. 200.

STRUCTURE BOTTOM TYPE J FOR INLETS TYPES C, D & E

GENERAL NOTES

1. These inlets are suitable for bicycle and pedestrian areas and are to be used in ditches, medians and other areas subject to infrequent traffic loadings but are not to be placed in areas subject to any heavy wheel loads.
2. Inlets subject to minimal debris should be constructed without slots. Where debris is a problem inlets should be constructed with slots. Slotted inlets located within roadway clear zones and in areas accessible to pedestrians shall have traversable slots. The traversable slot modification is not adaptable to Inlet Type H. Slots may be constructed at either or both ends as shown on plans.
3. Either cast iron or steel grates may be used on inlets without slots and on inlets with non-traversable slots. Steel grates are required on inlets with traversable slots and on inlets where bicycle traffic is anticipated. When Alternate G grate is specified in the plans, either the steel grate, hot dipped galvanized after fabrication, or the cast iron grate may be used, unless the plans stipulate the particular type.
4. Recommended maximum pipe sizes shown are for concrete pipe. Pipe sizes larger than those recommended must be checked for fit.
5. All exposed corners and edges of concrete are to be chamfered ¾".
6. Pavement to be used on inlets without slots and inlets with non-traversable slots only when called for in the plans; but required on all traversable slot inlets. Cost to be included in contract unit price for inlets. Quantities shown are for information only.
7. Traversable slots constructed in existing inlets shall be paid for as inlets partial, and shall include the cost for slot openings, paving and any required replacement grates.
8. Sodding to be used on all inlets not located in paved areas and paid for under contract unit price for Sodding SY.
9. For supplementary details see Index No. 201.

INLETS

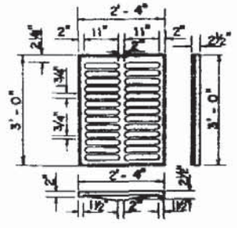

TYPE C

Approx. Weight 235 Lbs.

Note:
Type D Inlet to be used only when slots are required in wide side of inlet. Cast Iron Grate not permitted.

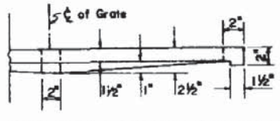

HALF SECTION CAST IRON GRATES

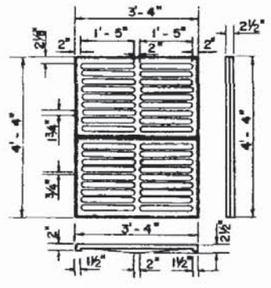

TYPE E

Approx. Weight 465 Lbs.

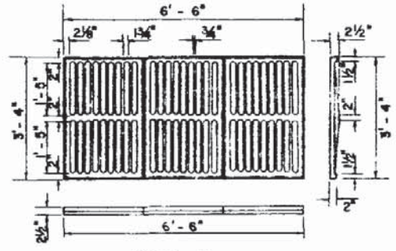

TYPE H

Approx. Weight 725 Lbs.

CAST IRON GRATES

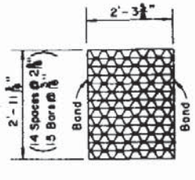

TYPE C

Straight Bars 2" x ¾6"
Reticuline Bars 1¼" x ¾6"
Bands ½" x ¼"
Approx. Weight 100 Lbs.

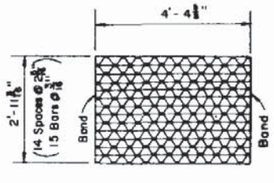

TYPE D

Straight Bars 2" x 3/16"
Reticuline Bars 1¼" x 3/16"
Bands 1½" x ¼"
Approx. Weight 180 Lbs.

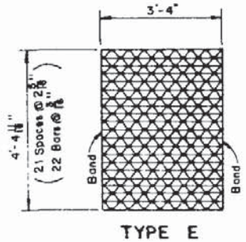

TYPE E

Straight Bars 2" x 3/16"
Reticuline Bars 1 1/4" x 3/16"
Bands 1½" x ¼"
Approx. Weight 215 Lbs.

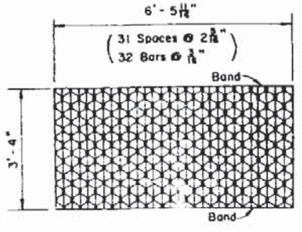

TYPE H

Straight Bars 2" x 3/16"
Reticuline Bars 1¼" x 3/16"
Bands 1½" x ¼"
Approx. Weight 315 Lbs.

STEEL GRATES

STATE OF FLORIDA DEPARTMENT OF TRANSPORTATION
ROAD DESIGN

DITCH BOTTOM INLETS TYPES C, D, E & H

	Name	Date
Designed by		
Drawn by		
Checked by	EGR/JG	7/81
F.H.W.A. Approved: 10/7/80		

Approved By
Deputy Design Engineer, Roadways

Revision No.	Sheet No.	Index No.
86	1 of 3	232

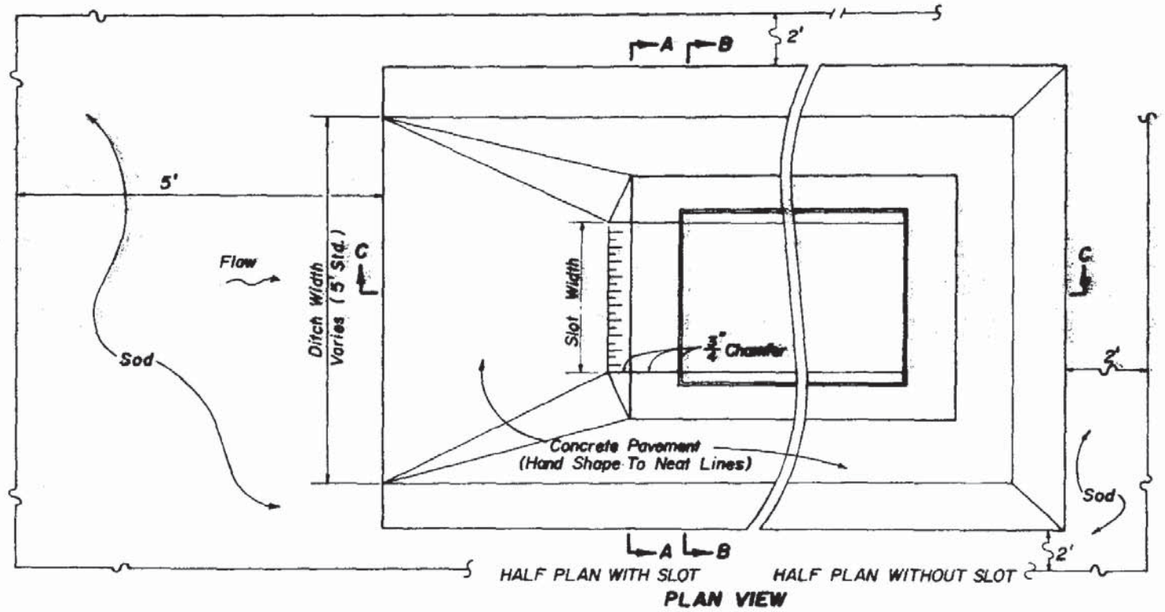

PLAN VIEW

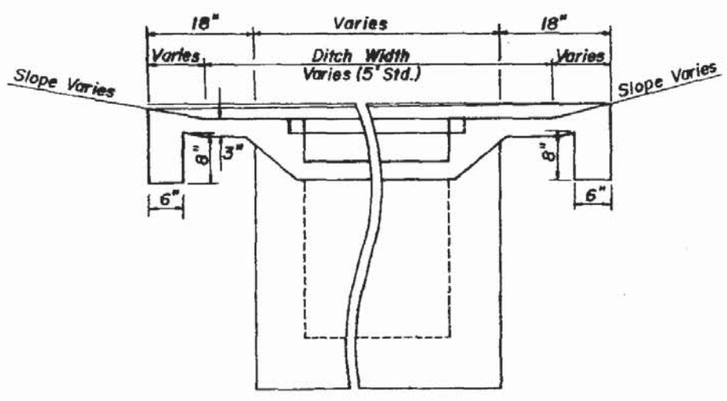

SECTION AA

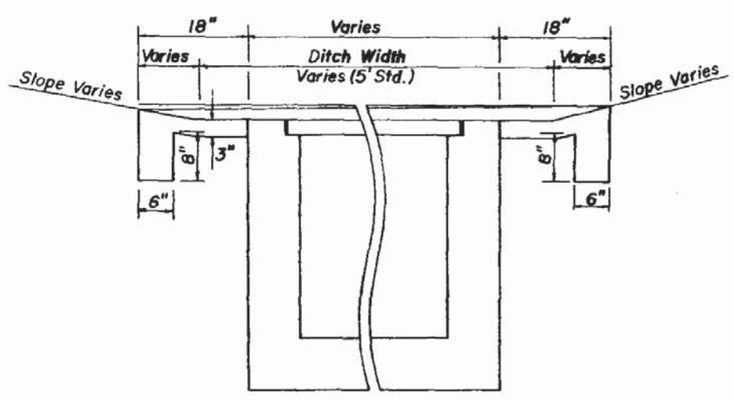

SECTION BB

PAVEMENT AND SODDING QUANTITIES FOR TRAVERSABLE SLOTS						
Inlet	Pavement				Sod	
	Single Slot		Double Slot		Single Slot	Double Slot
	SY	CY	SY	CY	SY	SY
C	4.87	0.77	6.16	0.93	12	16
D	5.99	0.91	7.70	1.10	14	19
E	5.88	0.91	7.37	1.08	14	18

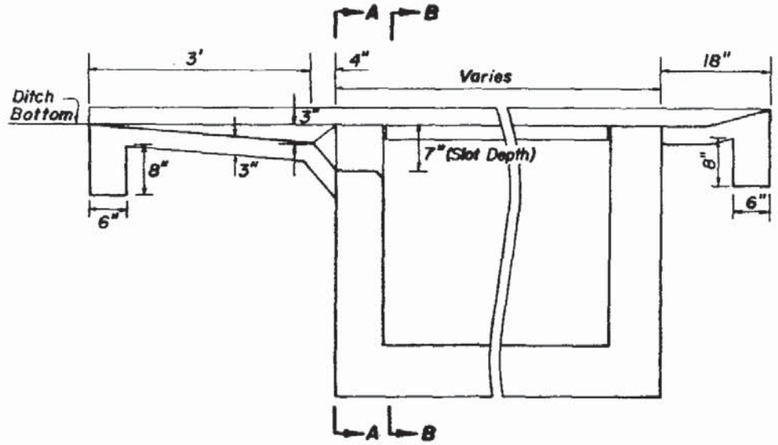

SECTION CC

TRAVERSABLE SLOTS

STATE OF FLORIDA DEPARTMENT OF TRANSPORTATION
ROAD DESIGN

DITCH BOTTOM INLETS TYPES C,D,E,&H

	Initials	Dates
Designed by	EGR	2/80
Drawn by	JM	2/80
Checked by	JVG	2/80

F.H.W.A. Approved: 10/7/80

Approved By
Deputy Design Engineer, Roadways

Revision No.	Sheet No.	Index No.
86	2 of 3	232

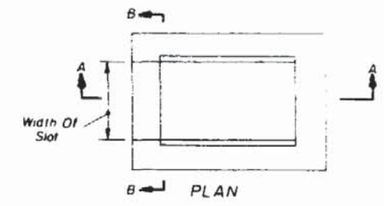

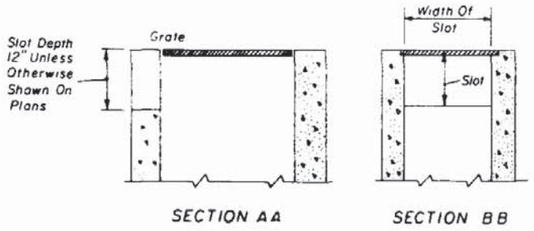

NON-TRAVERSABLE SLOTS

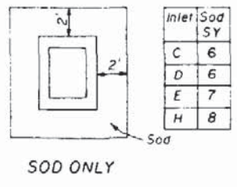

Inlet	Sod SY
C	6
D	6
E	7
H	8

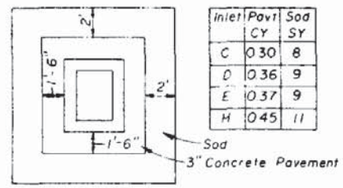

Inlet	Pavt CY	Sod SY
C	0.30	8
D	0.36	9
E	0.37	9
H	0.45	11

Note: See General Notes Nos. 6 and 7.

SODDING AND PAVEMENT FOR INLETS WITHOUT SLOTS AND INLETS WITH NON-TRAVERSABLE SLOTS

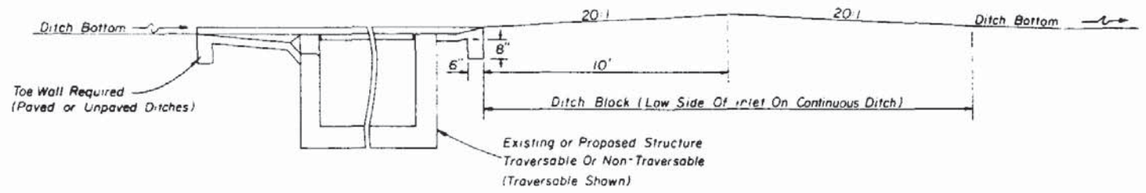

DITCH BLOCK FOR INLETS WITH OR WITHOUT SLOTS

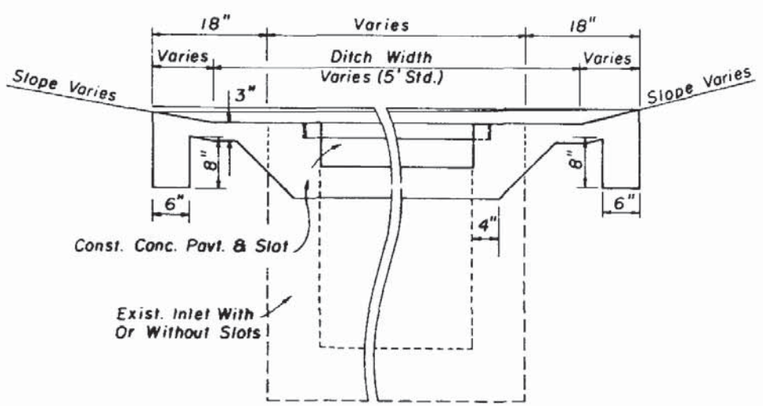

SECTION AA

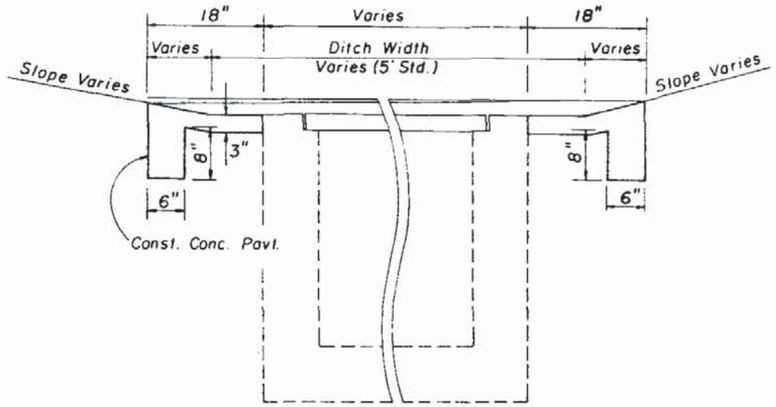

SECTION BB

PAVEMENT AND SODDING QUANTITIES FOR TRAVERSABLE SLOTS (EXISTING INLETS)						
Inlet	Pavement				Sod	
	Single Slot		Double Slot		Single Slot	Double Slot
	SY	CY	SY	CY	SY	SY
C	4.87	0.83	6.16	1.05	12	16
D	5.99	1.01	7.70	1.30	14	19
E	5.88	0.99	7.37	1.24	14	18

Note: For plan view and additional details see Sheet 2 of 3.
For payment see General Note Nos. 6 and 7.

TRAVERSABLE SLOTS FOR EXISTING INLETS

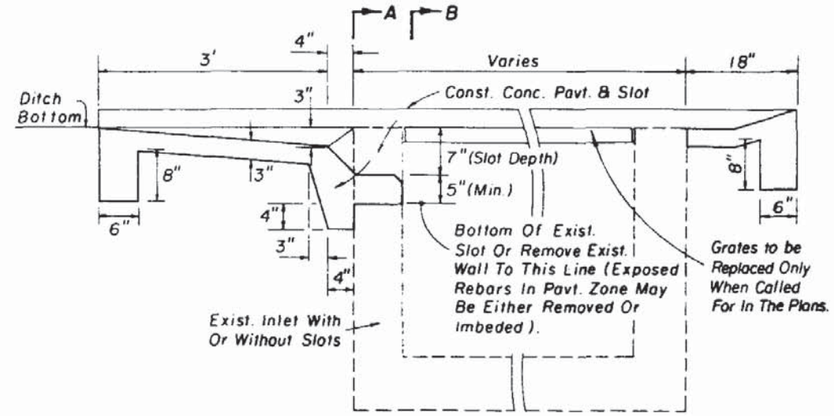

HALF PLAN WITH SLOT HALF PLAN WITHOUT SLOT

SECTION CC

STATE OF FLORIDA DEPARTMENT OF TRANSPORTATION
ROAD DESIGN

DITCH BOTTOM INLETS TYPES C,D,E & H

	Names	Dates
Designed by	EGR	7/84
Drawn by	DAE	7/84
Checked by	JBW/JVG	7/84
F H W A	Approved 9/21/84	

Approved By
State Design Engineer, Roadways

Revision No.	Sheet No.	Index No.
86	3 of 3	232

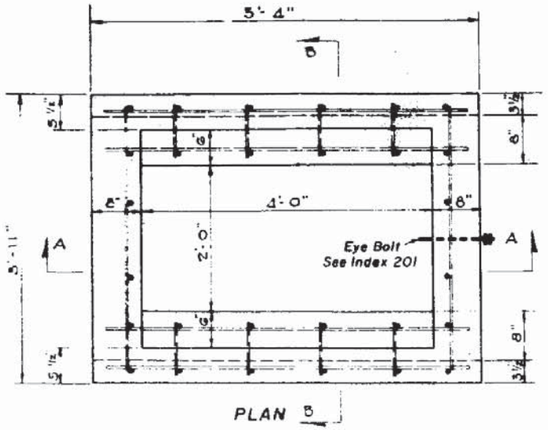

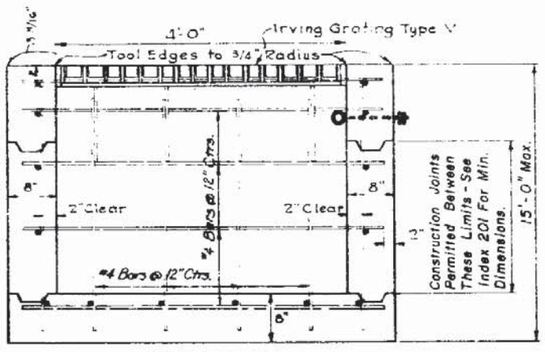

SECTION AA

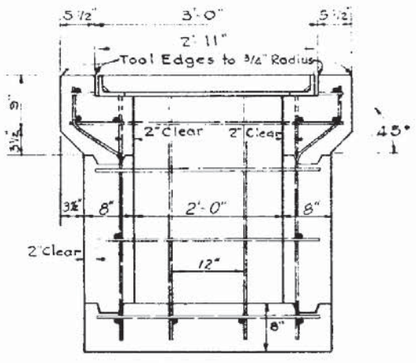

SECTION BB

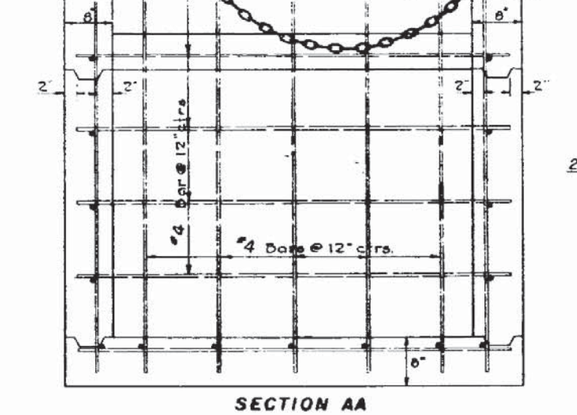

SECTION AA

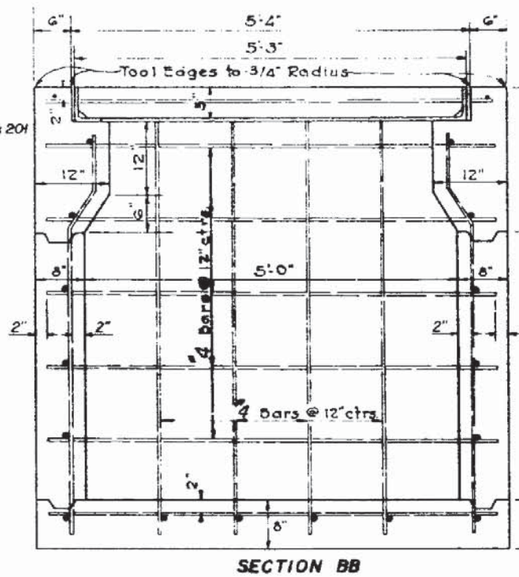

SECTION BB

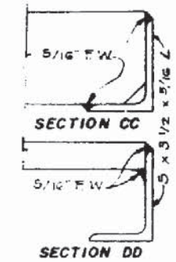

STEEL GRATE

5" Steel Decking, Weight 630 Lbs. Main Bars 5" x ¼"
Intermediate Bars ½" x ¼", Reticuline Bars 1¼" x 3/16"

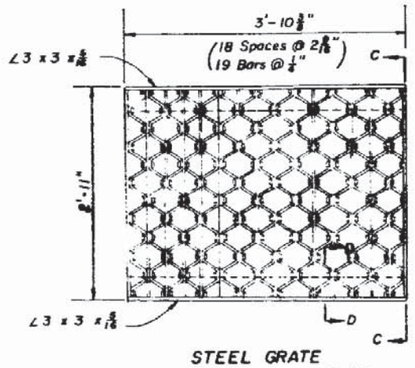

STEEL GRATE

Steel Grating, Straight Bars 3" x ¼"
Reticuline Bars 2" x 3/16"

TYPE F

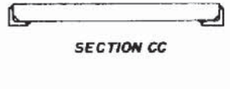

SECTION CC

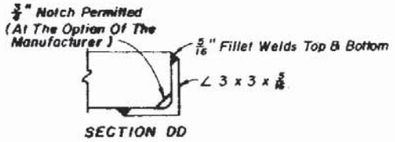

SECTION DD

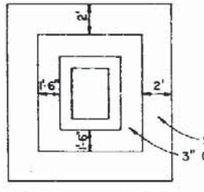

PAVT. AND SOD

INLET	PAVT. CY*	SOD SY
G	0.43	10
F	0.34	9

*For Estimating Purposes Only

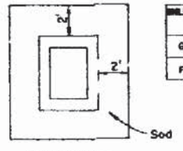

SOD ONLY

INLET	SOD SY
G	7
F	6

Notes: 1. Pavement and/or sod to be used only where called for in the plans.
2. Cost of paving to be included in cost of inlet.

PAVEMENT AND SODDING

TYPE G

GENERAL NOTES

1. These inlets are designed for use in ditches, medians, pavement areas, or other areas subject to heavy wheel loads where debris is minimal and is subject to pedestrian and/or bicycle traffic.
2. When alternate G grate is specified in plans, the grate is to be hot dipped galvanized after fabrication.
3. These inlets may be used with structure bottoms Type J, Alt. B; the inlet and bottom combinations are to be paid for under the contract unit price for inlets (DT Bot) (Type F (or G)) (J Bot, Depth), Ea.

STATE OF FLORIDA DEPARTMENT OF TRANSPORTATION
ROAD DESIGN

DITCH BOTTOM INLETS TYPES F & G

	Names	Dates
Designed by	T W J	1/50
Drawn by	M E F	1/50
Checked by	W H M	1/50

F.H.W.A. Approved : 5/1/75

Approved By
Deputy Design Engineer, Roadways

Revision No.	Sheet No.	Index No.
86	1 of 1	233

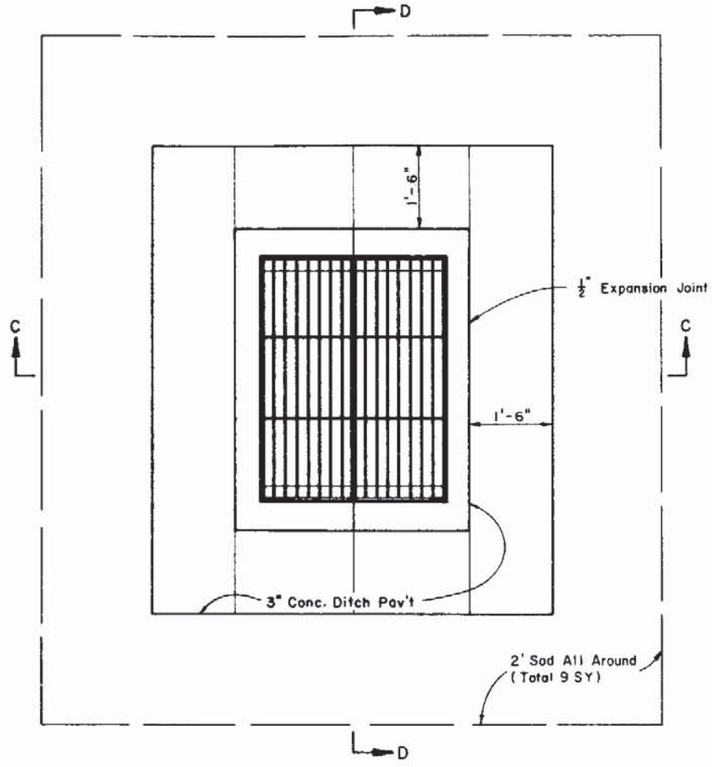

PAVEMENT & SODDING

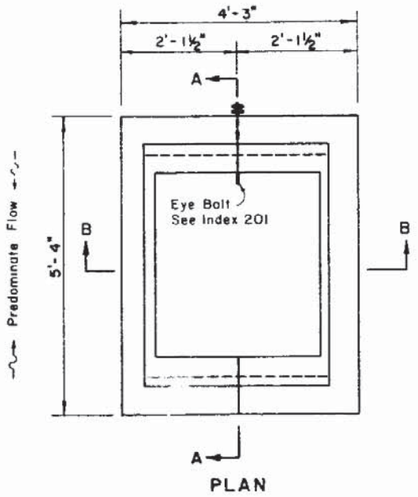

PLAN

RECOMMENDED MAXIMUM PIPE SIZES	
INLET INSIDE WIDTH	PIPE SIZE
2'-11"	24"
4'-0"	36"

Note: Recommended sizes are for concrete pipe. Sizes for other types of pipe must be verified for fit in accordance with Index No. 201. For larger pipe see bottom Type J detail right and Index No. 200.

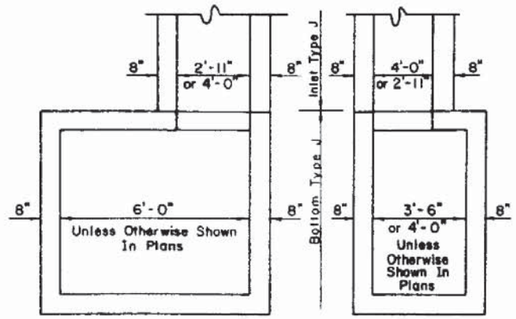

INLET WITH BOTTOM TYPE J

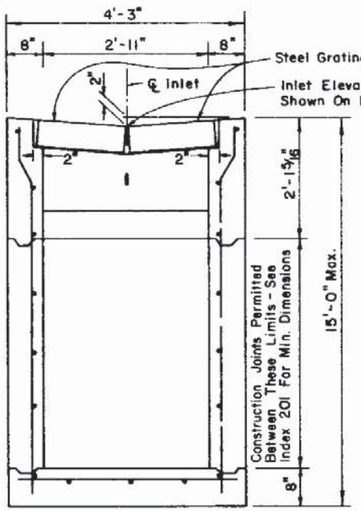

SECTION BB

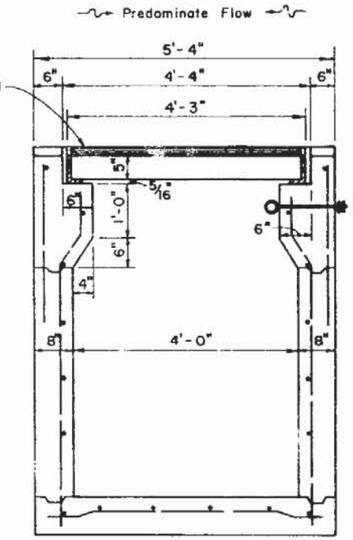

SECTION AA

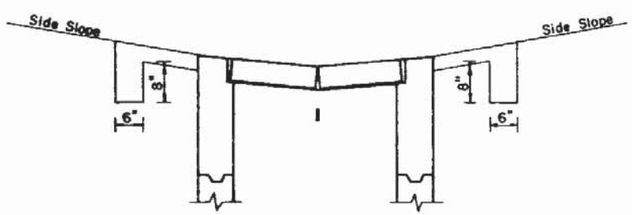

SECTION CC

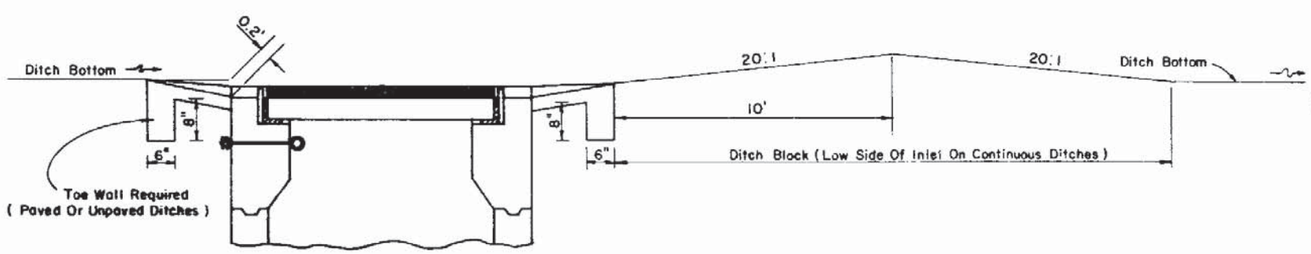

SECTION DD

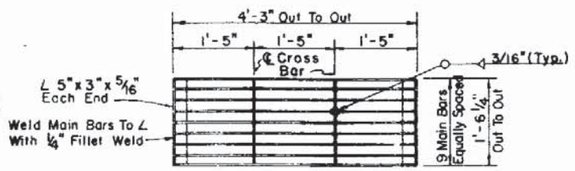

STEEL GRATING

Note: Two Required Per Inlet

Main Bars 5" x ¼" (Notched For Cross Bars).
Cross Bars 1¾" x ⅛" (Continuously Welded At Main Bar Notches).
Main Bars And Cross Bars Flush On Top.

GENERAL NOTES

1. This inlet is designed for ditches, medians or other areas subject to heavy wheel loads, where only light debris is expected and pedestrian traffic is anticipated.
   NOTICE: Inlet not for use in areas subject to bicycle traffic.
2. Reinforcing — No. 4 bars at 12" centers both ways with 2" clearance to inside face. Cut or bend bars out of way of pipe when necessary; Bars to clear pipe by 1½".
3. When alternate G grate is specified in plans, the grate is to be hot dipped galvanized after fabrication.
4. For supplemental details, see Index 201.
5. Cost of ditch paving to be included in cost of inlet. Sodding to be paid for under contract unit price for Sodding, SY.

STATE OF FLORIDA DEPARTMENT OF TRANSPORTATION
ROAD DESIGN

DITCH BOTTOM INLET TYPE J

	Name	Date
Designed by	L.M.F.	8/76
Drawn by		
Checked by	S.R.L.	8/76
F.H.W.A. Approved		9/3/76

Approved By
Deputy Design Engineer, Roadways

Revision No.	Sheet No.	Index No.
86	1 of 1	234

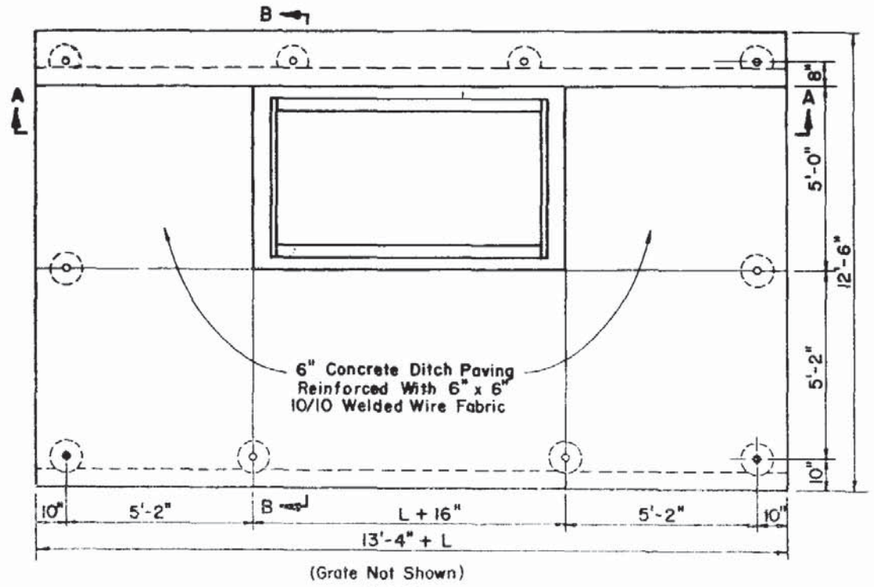

PLAN

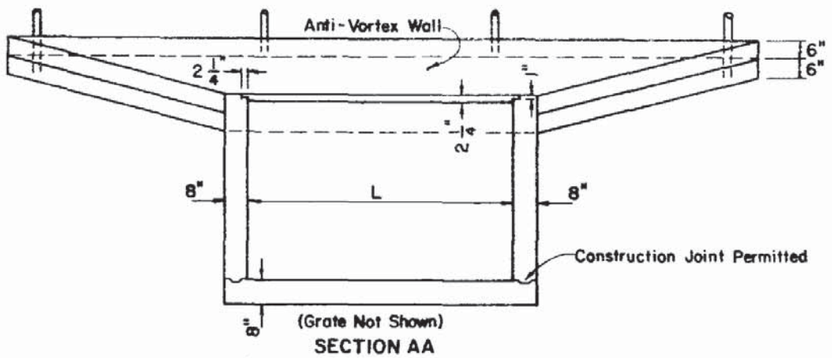

SECTION AA

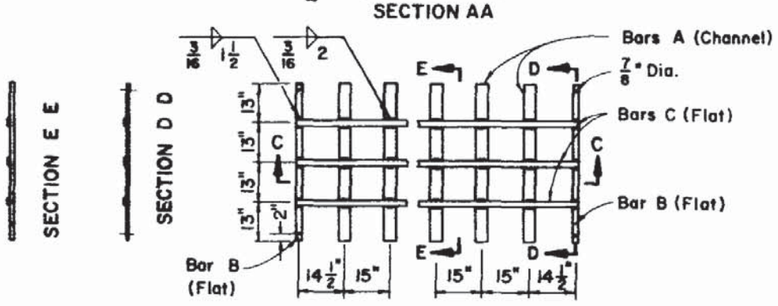

STEEL GRATE

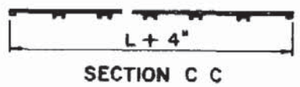

SECTION C C

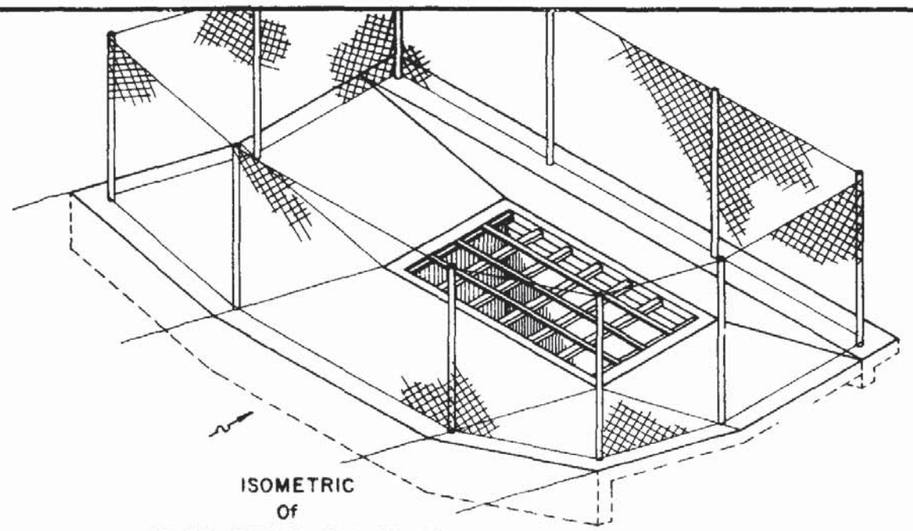

ISOMETRIC
Of
INLET FENCE ENCLOSURE

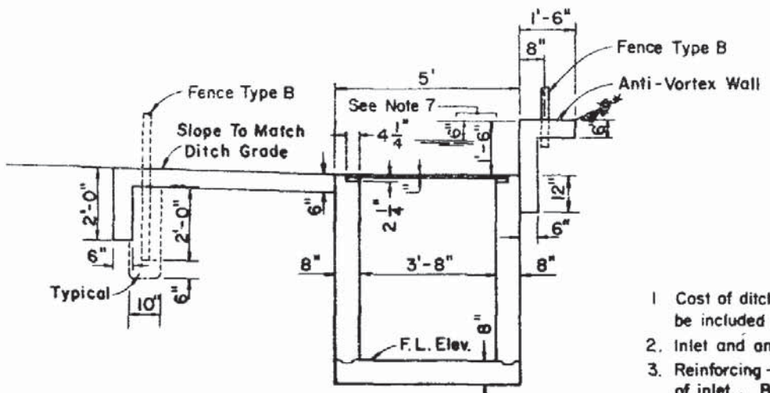

(Grate Not Shown)
SECTION BB

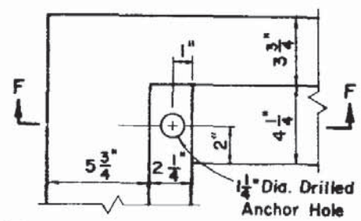

GRATE SEAT AND ANCHOR HOLE PLAN

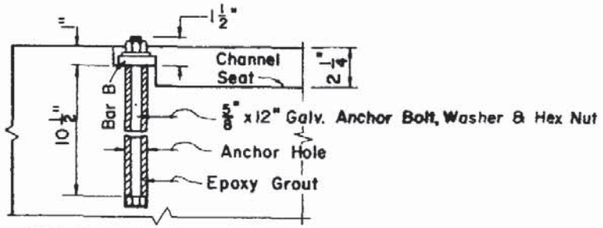

(With Bar B And Anchor Bolt)
SECTION FF

GRATE QUANTITIES						
PIPE SIZE	L	BILL OF STEEL			STEEL WEIGHT	
		BAR	No. REQ'D.	LENGTH	CHANNEL 4"x5.4*	FLAT 2" x 1/2" (3.4*)
30" & 36"	4'-9"	A	3	4'-4"	70	
		B	2	4'-4"		30
		C	3	5'-1"		52
42" & 48"	6'-0"	A	4	4'-4"	94	
		B	2	4'-4"		30
		C	3	6'-4"		65
54" & 60"	7'-3"	A	5	4'-4"	117	
		B	2	4'-4"		30
		C	3	7'-7"		77
66" & 72"	8'-6"	A	6	4'-4"	140	
		B	2	4'-4"		30
		C	3	8'-10"		90
SPECIAL	9'-9"	A	7	4'-4"	164	
		B	2	4'-4"		30
		C	3	10'-1"		103
SPECIAL	11'-0"	A	8	4'-4"	187	
		B	2	4'-4"		30
		C	3	11'-4"		116
SPECIAL	12'-3"	A	9	4'-4"	211	
		B	2	4'-4"		30
		C	3	12'-7"		128
SPECIAL	13'-6"	A	10	4'-4"	234	
		B	2	4'-4"		30
		C	3	13'-10"		141
SPECIAL	14'-9"	A	11	4'-4"	257	
		B	2	4'-4"		30
		C	3	15'-1"		154
SPECIAL	16'-0"	A	12	4'-4"	281	
		B	2	4'-4"		30
		C	3	16'-4"		167
SPECIAL	17'-3"	A	13	4'-4"	304	
		B	2	4'-4"		30
		C	3	17'-7"		179
SPECIAL	18'-6"	A	14	4'-4"	328	
		B	2	4'-4"		30
		C	3	18'-10"		192

GENERAL NOTES

1. Cost of ditch paving, anti-vortex wall, grate, concrete, reinforcing steel and fence enclosure to be included in the cost of inlet.
2. Inlet and anti-vortex wall to be Class I Concrete.
3. Reinforcing – No. 4 bars at 12" centers both ways, 1 1/2" clearance to inside face and bottom of inlet. Bend top and corner bars to clear anchor holes.
4. Channel section C 3 x 6 may be used as an alternate for the C 4 x 5.4 channel.
5. Channel and bar steel to be ASTM A588 weathering steel. Grating exposed to salt water shall be ASTM A 572, Grade 50, and galvanized in accordance with Section 962-7 of the Standard Specifications, and shall be designated in the plans as Alternate G.
6. Fence enclosure shall be Fence Type B (Index No. 452). All posts to be set in concrete. A minimum of 10 posts required. Corner and approach side posts to be 3" nominal.
7. Inlet length (L) shall be set by the designer for the greater of either culvert requirement or inlet pool not to exceed 12" depth. Structures over 6' in depth are to be checked for flotation by the designer of project drainage.
8. This inlet is to be used at locations having high flow rates, usually where an endwall could not be utilized without hazardous intake.
9. This inlet is not intended for use with structure bottoms Type J, Alternate B.

STATE OF FLORIDA DEPARTMENT OF TRANSPORTATION
ROAD DESIGN

DITCH BOTTOM INLET TYPE K

	Names	Dates
Designed by	FNHA	
Drawn by	SM	6/79
Checked by	JB	6/79

Approved By
Deputy Design Engineer, Roadways

F.H.W.A. Approved:

Revision No.	Sheet No.	Index No.
83	1 of 1	235

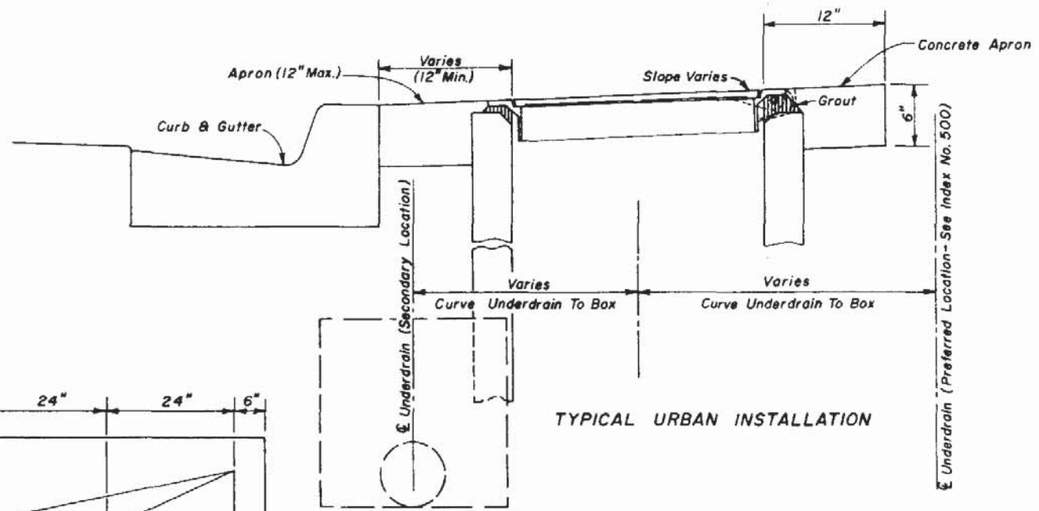

TYPICAL URBAN INSTALLATION

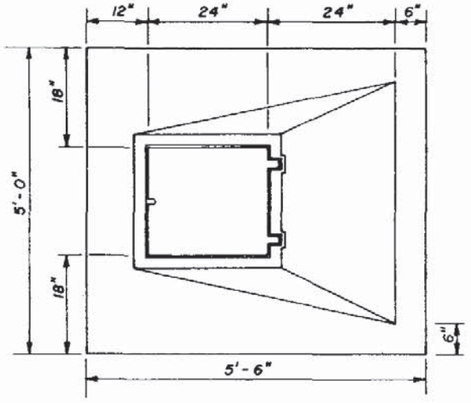

TOP VIEW

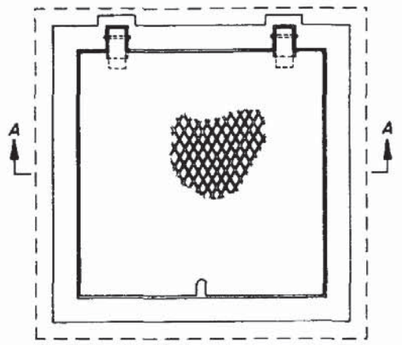

TOP VIEW

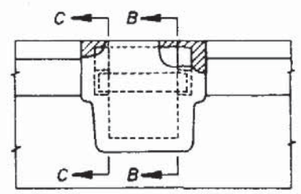

BACK VIEW

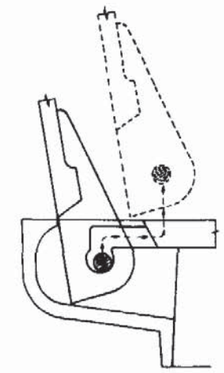

COVER REMOVAL

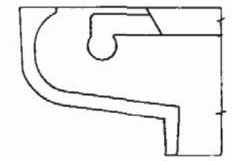

SECTION CC

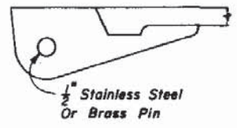

SECTION BB

HINGE DETAIL

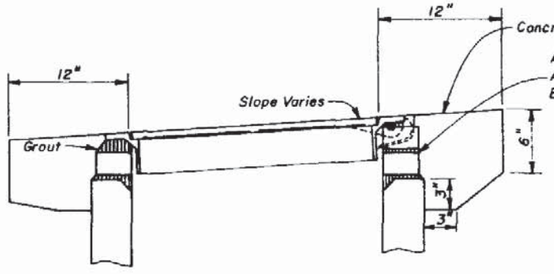

PERMISSIBLE TOP ADJUSTMENT

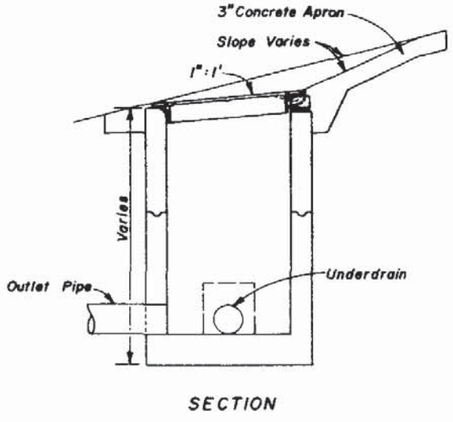

SECTION

TYPICAL INSTALLATION ON SLOPES

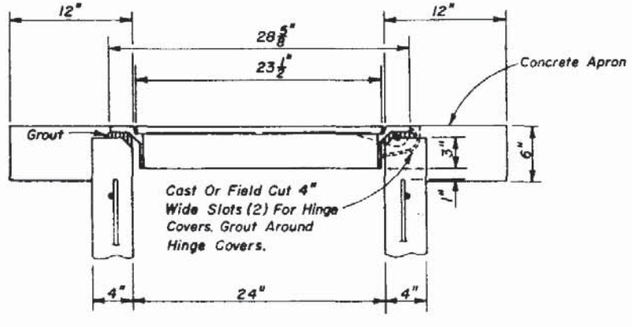

TYPICAL TOP AND APRON

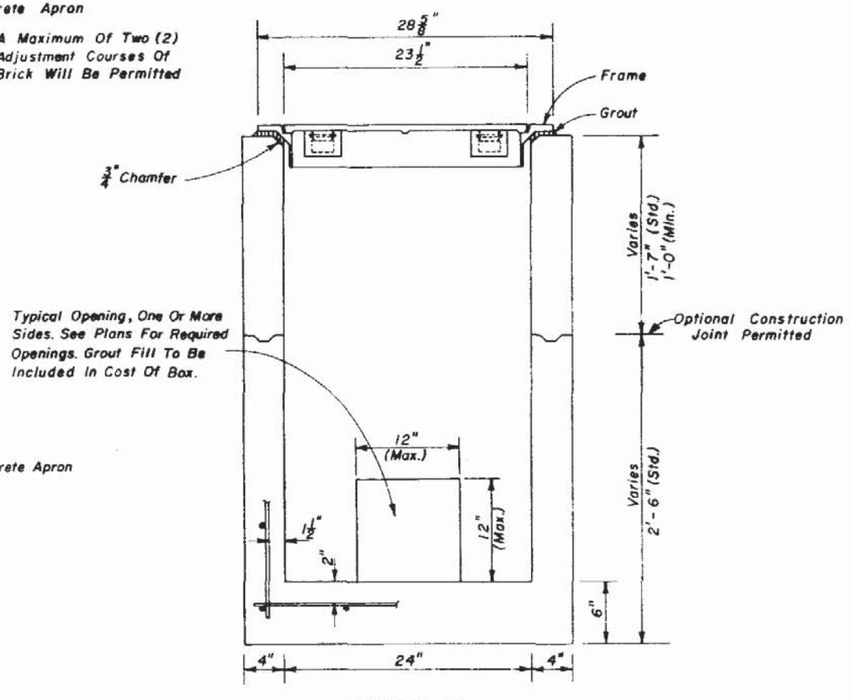

SECTION AA

BOX AND TOP

GENERAL NOTES

1. Cast iron cover and frame to be Neenah Foundary Company R-6660-JH, U.S. Foundary and Manufacturing Corporation No. A-632 or equal. Neenah R-6660-JH detailed this index.
2. Box to be Class I Concrete, reinforced with No.3 bars on 8" centers both ways, sides and bottom.
3. Concrete apron to be included in the contract unit price for Underdrain Inspection Box.
4. All covers shall be furnished with pick holes. Fitted lifts or handles are not permitted.
5. Manhole Type P Alternate A, Index 200, with Type I Frame and Cover, Index 201, may be used in lieu of the box detailed on this sheet, and is recommended when high ADT increases chance of repeated vehicle loadings.

STATE OF FLORIDA DEPARTMENT OF TRANSPORTATION
ROAD DESIGN

UNDERDRAIN INSPECTION BOX

	Names	Dates
Designed by	WS	5/81
Drawn by	JM	5/81
Checked by	JVG	5/81
F.H.W.A. Approved: 10/8/81		

Approved By D.C. Bullard
Deputy Design Engineer, Roadways

Revision No.	Sheet No.	Index No.
82	1 of 1	245

APPLICATION AND SELECTION GUIDE FOR PIPE END TREATMENTS

INDEX NO.	DESCRIPTION		APPLICATION			INLET END			OUTLET END		SAFETY		ECONOMIC RATING	
	TYPE	PIPE SIZE	CROSSDRAIN	SIDEDRAIN	MEDIAN	APPLICABLE	HYDRAULIC PERFORMANCE	K_e	APPLICABLE	EROSION TOLERANT	PERMITTED LOCATION	TRAFFIC-SAFE GRATE AVAILABLE		
250	Straight Concrete	Single and Multiple 15" Thru 54"	Yes	No	Limited	Yes	Excellent	0.2	Limited	Good	Outside CZ	No	Fair	
251	Straight Concrete	Single and Double 60"	Yes	No	Limited	Yes	Excellent	0.2	Limited	Good	Outside CZ	No	Fair	
252	Straight Concrete	Single and Double 66"	Yes	No	Limited	Yes	Excellent	0.2	Limited	Good	Outside CZ	No	Fair	
253	Straight Concrete	Single and Double 72"	Yes	No	Limited	Yes	Excellent	0.2	Limited	Good	Outside CZ	No	Fair	
255	Straight Concrete	Single 84"	Yes	No	Limited	Yes	Excellent	0.2	Limited	Good	Outside CZ	No	Fair	
258	Straight Sand Cement	Single & Multiple 18" Thru 84"	Limited	No	Limited	Yes	Very good	0.3	Yes	Good	Outside CZ	No	Good	* For temporary construction or use on a minor facility.
260	U Type With Grate Concrete	Single 15" Thru 30"	Limited	No	Yes	Yes	Fair	0.7	Yes	Very Good	Inside CZ	Required	Good	
261	U Type Concrete	Single 15" Thru 30"	Limited	No	Yes	Limited	Good	0.5-0.7	Yes	Good	Grate Required Inside CZ	Yes	Fair	
264	Concrete Energy Dissipator	Single 30" Thru 72"	Limited	No	No	No	N.A	N.A	Yes	Excellent	Outside CZ	No	N.A	
266	Winged Concrete	Single 12" Thru 48"	Yes	No	Yes	Yes	Very Good	0.3	Yes	Good	Outside CZ	No	Good	
268	U Type Sand Cement	Single & * Multiple 15" Thru 60"	Limited	No	Limited	Yes	Good	0.5	Yes	Very Good	Outside CZ	No	Good	* For temporary construction or use on a minor facility.
270	Flared End Section Concrete	Single 12" Thru 72"	Yes	No	Yes	Yes	Good	0.5	Yes	Very Good *	Outside CZ *	No	Very Good	* Construction of optional toewall and concrete jacket may be necessary. Flared end sections sizes 12" and 15" may be located as close as 8' beyond the outside edge of the shoulder.
272	Cross Drain Mitered End Section	Single & Multiple 15" Thru 72"	Yes	No	Yes	Yes	Fair	0.7	Yes	Good	Outside CZ *	No	Very Good	* Mitered end sections sizes 15", 18" and 24" may be located as close as 8' beyond the outside edge of the shoulder.
273	Side Drain Mitered End Section	Single & Multiple 15" Thru 60"	No	Yes	No	Yes	Fair	0.7 (w/o grate) 1.0 (with grate)	Yes	Good	Inside CZ *	Yes	Good	* Mitered end section size 30" and larger require use of grate. Grate may be deleted if pipe is located outside CZ and is offset from approach ditch alignment.
274	Side Drain Mitered End Section	Single 15" Thru 24"	No	Yes	No	Yes	Fair	0.7	Yes	Good	Inside CZ	No	Good	* For sidedrain installations constructed by FDOT maintenance forces or constructed under FDOT maintenace permit only.

1. All end treatments must be selected to satisfy hydraulic suitabilities with proper consideration given to safety and economics.
2. CZ denotes clear zone, formerly CRA denoting clear recovery area.
3. Grates should not be placed on oulet ends unless positive debris protection is provided at inlet end.
4. Additional notes concerning application restrictions may be shown on individual indexes.
5. Economic ratings are based on statewide average costs.
6. End treatments with a K_e of 0.5 or greater should be used only in areas of low design velocities and negligible debris.
7. Pipe sizes are circular, Class III B Wall, concrete pipe. Eliptical pipe and corrugated pipe are to be checked for fit in accordance with Index No 201; metal pipe sizes should be reviewed using $2\frac{2}{3}" X \frac{1}{2}"$ corrugation up to 30" and 3"X1" corrugation for larger sizes.

STATE OF FLORIDA DEPARTMENT OF TRANSPORTATION
ROAD DESIGN

PIPE END TREATMENT SELECTION GUIDE

	Names	Dates
Designed by	EGR	9/6/84
Drawn by	DAE	9/6/84
Checked by	EGR	9/6/84
FHWA Approved		9/21/84

Approved By
State Design Engineer, Roadways

Revision No.	Sheet No.	Index No.
85	1 of 1	249

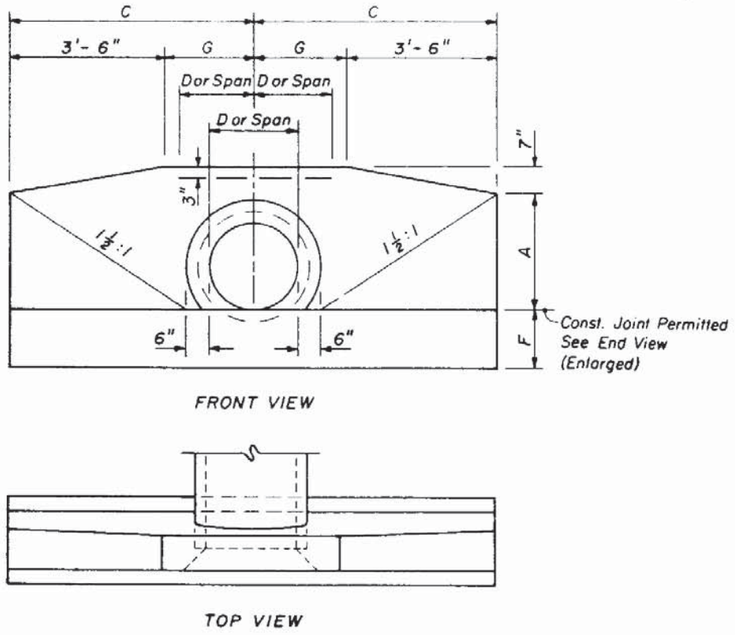

FRONT VIEW

TOP VIEW

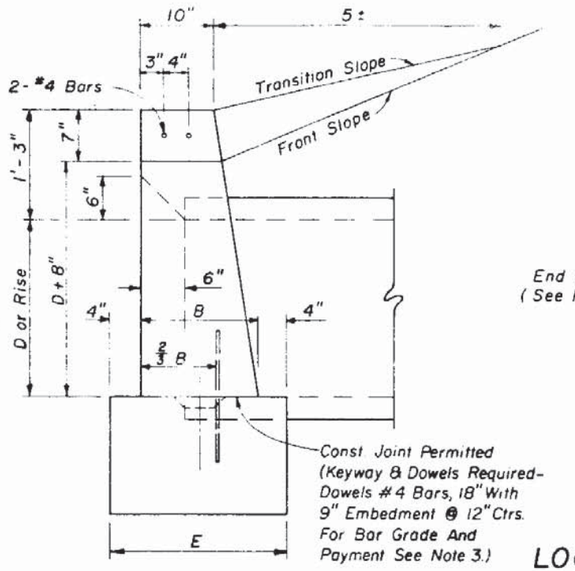

END VIEW (ENLARGED)

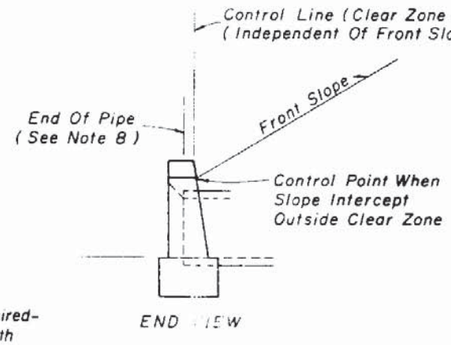

END VIEW

STANDARD LOCATION CONTROL

ENDWALL DIMENSIONS (EXCLUSIVE OF MULTIPLE PIPE SPACING)

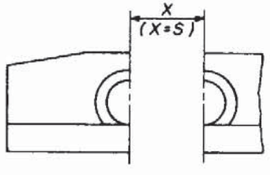

FRONT VIEW

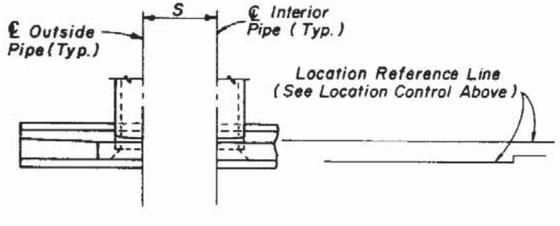

TOP VIEW

NORMAL PIPE

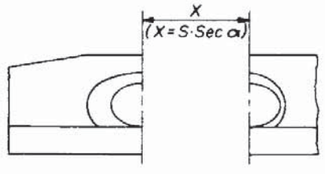

FRONT VIEW

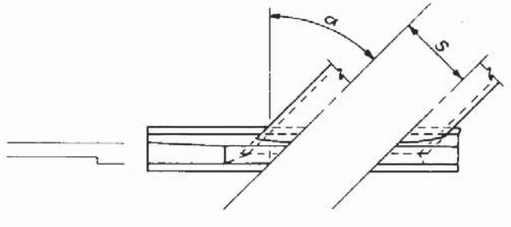

TOP VIEW

SKEWED PIPE

LEGEND

- α Pipe Skew
- S Center To Center Pipe Spacing
- X Centerline To Centerline Dimension At Face Of Headwall

ENDWALL POSITIONS FOR SINGLE AND MULTIPLE PIPE AND SPACING FOR MULTIPLE PIPE

GENERAL NOTES

1. Endwall dimensions, locations and positions are for round and elliptical concrete pipe and for round and pipe-arch corrugated metal pipe. Round concrete pipe shown.
2. Front slope and ditch transitions shall be in accordance with Index No. 280.
3. Endwalls may be cast in place or precast concrete. Reinforcing steel shall be Grades 40 or 60. Additional reinforcement necessary for handling precast units shall be determined by the Contractor or the supplier. Cost of reinforcement shall be included in the contract unit price for concrete (roadway).
4. Concrete meeting the requirements of ASTM C-478 (4000 psi) may be used in lieu of Class I concrete in precast items manufactured in plants which are under the Standard Operating Procedures for the inspection of precast drainage products.
5. On outfall ditches with side slopes flatter than 1½:1, provide 20' transitions from the endwall to the flatter side slopes, right of way permitting.
6. For sodding around endwalls see Index No. 281.
7. Payment for concrete quantities for endwalls skewed to the pipe shall be made on the following basis:

Endwall Skew To Pipe	Use Tabulated Value
0° to 5°	0°
6° to 15°	15°
16° to 30°	30°
31° or over	45°

8. Pipe length plan quantities shall be based on the pipe end locations shown in the standard location control end view, or, lengths based on special endwall locations called for in the plans.
9. Payment for pipe in pipe culverts shall be based on plan quantities, adjusted for endwall locations subsequently established by the Engineer.

STATE OF FLORIDA DEPARTMENT OF TRANSPORTATION
ROAD DESIGN

STRAIGHT CONCRETE ENDWALLS SINGLE AND MULTIPLE PIPE

	Names	Dates
Designed by	HAB/EGR	73/83
Drawn by	RWR/HSD	83
Checked by	JBW/JVG	83
F.H.W.A. Approved: 10/6/83		

Approved By
State Design Engineer, Roadway

Revision No.	Sheet No.	Index No.
86	1 of 2	250

DATA AND ESTIMATED QUANTITIES FOR ONE ENDWALL

ROUND CONCRETE AND CORRUGATED METAL PIPE

D	Opening Area (SF) Number Of Pipes 1	2	3	4	Dimensions A	B	C	E	F	G	S	X 0°	15°	30°	45°
15"	1.23	2.46	3.69	4.92	1'-11"	1'-2"	4'-0"	1'-10"	1'-2"	0'-6"	2'-7"	2'-7"	2'-8"	3'-0"	3'-8"
18"	1.77	3.54	5.31	7.08	2'-2"	1'-3"	4'-6"	1'-11"	1'-3"	1'-0"	2'-10"	2'-10"	2'-11"	3'-3"	4'-0"
21"	2.41	4.82	7.23	9.64	2'-5"	1'-4"	5'-0"	2'-0"	1'-4"	1'-6"	3'-2"	3'-2"	3'-3"	3'-8"	4'-6"
24"	3.14	6.28	9.42	12.56	2'-8"	1'-4"	5'-6"	2'-0"	1'-4"	2'-0"	3'-5"	3'-5"	3'-6"	3'-11"	4'-10"
27"	3.98	7.96	11.94	15.92	2'-11"	1'-5"	6'-0"	2'-1"	1'-5"	2'-6"	3'-10"	3'-10"	4'-0"	4'-5"	5'-5"
30"	4.91	9.82	14.73	19.64	3'-2"	1'-6"	6'-6"	2'-2"	1'-6"	3'-0"	4'-3"	4'-3"	4'-5"	4'-11"	6'-0"
36"	7.07	14.14	21.21	28.28	3'-8"	1'-8"	7'-6"	2'-4"	1'-8"	4'-0"	5'-1"	5'-1"	5'-3"	5'-10"	7'-2"
42"	9.62	19.24	28.86	38.48	4'-2"	1'-10"	8'-6"	2'-6"	2'-0"	5'-0"	6'-0"	6'-0"	6'-3"	6'-11"	8'-6"
48"	12.57	25.14	[illegible]	50.28	4'-8"	2'-1"	9'-6"	[illegible]	[illegible]	[illegible]	[illegible]	6'-9"	[illegible]	[illegible]	[illegible]
54"	[illegible]	31.80	47.70	63.60	5'-2"	2'-6"	[illegible]	[illegible]	[illegible]	[illegible]	[illegible]	[illegible]	[illegible]	[illegible]	[illegible]

D	Class I Concrete (CY) – Number And Type Of Pipe And Skew Angle Of Pipe: Single Concrete 0°	Single CM 0°	Double Concrete 0°	15°	30°	45°	Double CM 0°	15°	30°	45°	Triple Concrete 0°	15°	30°	45°	Triple CM 0°	15°	30°	45°	Quadruple Concrete 0°	15°	30°	45°	Quadruple CM 0°	15°	30°	45°	D
15"	1.23	1.24	1.59	1.60	1.65	1.74	1.62	1.63	1.68	1.78	1.94	1.96	2.05	2.23	1.99	2.02	2.11	2.30	2.30	2.34	2.47	2.74	2.37	2.41	2.75	2.84	15"
18"	1.56	1.59	1.99	2.01	2.06	2.17	2.04	2.06	2.11	2.23	2.43	2.46	2.56	2.79	2.51	2.54	2.65	2.89	2.86	2.91	3.06	3.40	2.96	3.01	3.17	3.53	18"
21"	1.97																										21"
24"	2.24	2.29	2.82	2.84	2.91	3.06	2.91	2.93	3.01	3.17	3.39	3.43	3.57	3.87	3.52	3.56	3.71	4.03	3.97	4.03	4.24	4.69	4.14	4.20	4.43	4.91	24"
27"	2.73																										27"
30"	3.26	3.34	4.13	4.16	4.26	4.49	4.28	4.31	4.43	4.67	4.98	5.04	5.25	5.59	5.20	5.27	5.49	5.97	5.84	5.93	6.24	6.91	6.13	6.23	6.56	7.29	30"
36"	4.53	4.64	5.73	5.77	5.92	6.23	5.95	6.00	6.15	6.49	[illegible]	7.00	7.29	7.91	7.25	7.34	[illegible]	8.35	8.13	8.26	8.59	9.52	8.57	8.71	9.18	10.20	36"
42"	6.33	6.49	8.11	8.17	[illegible]	8.85	8.43	8.50	8.72	9.25	[illegible]	[illegible]	10.45	[illegible]	10.36	10.52	[illegible]	11.93	11.69	11.87	12.51	13.89	[illegible]	[illegible]	13.22	14.73	42"
48"	8.15	[illegible]	10.40	10.44	[illegible]	11.33	[illegible]	[illegible]	11.23	[illegible]	[illegible]	[illegible]	13.34	[illegible]	[illegible]	13.51	[illegible]	[illegible]	14.85	[illegible]	15.93	17.68	[illegible]	[illegible]	16.97	18.90	48"
54"	[illegible]		15.23	[illegible]	[illegible]	[illegible]					[illegible]	[illegible]	[illegible]	[illegible]					[illegible]	[illegible]	23.93	26.57					54"

CORRUGATED METAL PIPE ARCH

Span	Rise	Opening Area (SF) Number Of Pipes 1	2	3	4	Dimensions A	B	C	E	F	G	S	X 0°	15°	30°	45°
17"	13"	1.1	2.2	3.3	4.4	1'-9"	1'-2"	3'-10"	1'-10"	1'-2"	0'-4"	2'-6"	2'-6"	2'-7"	2'-11"	3'-6"
21"	15"	1.6	3.2	4.8	6.4	1'-11"	1'-2"	4'-3"	1'-10"	1'-2"	0'-9"	2'-10"	2'-10"	2'-11"	3'-3"	4'-0"
28"	20"	2.8	5.6	8.4	11.2	2'-4"	1'-3"	5'-2"	1'-11"	1'-3"	1'-8"	3'-5"	3'-5"	3'-6"	3'-11"	4'-10"
35"	24"	4.3	8.6	12.9	17.2	2'-8"	1'-4"	5'-11½"	2'-0"	1'-4"	2'-5½"	4'-0"	4'-0"	4'-2"	4'-7"	5'-8"
42"	29"	5.9	11.8	17.7	23.6	3'-1"	1'-5"	6'-10½"	2'-1"	1'-5"	3'-4½"	4'-9"	4'-9"	4'-11"	5'-6"	6'-9"
49"	33"	8.4	16.8	25.2	33.6	3'-5"	1'-6"	7'-8"	2'-2"	1'-6"	4'-2"	5'-6"	5'-6"	5'-8"	6'-4"	7'-9"
57"	38"	10.6	21.2	31.8	42.4	3'-10"	1'-7"	8'-7½"	2'-3"	1'-7"	5'-1½"	6'-4"	6'-4"	6'-7"	7'-4"	8'-11"
64"	43"	13.2	26.4	39.6	52.8	4'-3"	1'-8"	9'-6½"	2'-4"	1'-8"	6'-0½"	7'-1"	7'-1"	7'-4"	8'-2"	10'-0"
71"	47"	16.9	33.8	50.7	67.6	4'-7"	1'-10"	10'-4"	2'-6"	2'-0"	6'-10"	7'-10"	7'-10"	8'-1"	9'-1"	11'-1"

Span	Rise	Class I Concrete (CY) – Number Of Pipe And Skew Angle Of Pipe: Single 0°	Double 0°	15°	30°	45°	Triple 0°	15°	30°	45°	Quadruple 0°	15°	30°	45°	Span	Rise	Approx Equiv. Round Pipe
17"	13"	1.16	1.47	1.48	1.52	1.60	1.78	1.80	1.88	2.04	2.09	2.12	2.23	2.48	17"	13"	15"
21"	15"	1.33	1.69	1.70	1.75	1.84	2.04	2.06	2.15	2.33	2.40	2.44	2.57	2.84	21"	15"	18"
28"	20"	1.78	2.31	2.33	2.39	2.53	2.83	2.87	2.99	3.26	3.36	3.42	3.60	4.01	28"	20"	24"
35"	24"	2.34	3.03	3.05	3.14	3.32	3.72	3.77	3.93	4.29	4.40	4.47	4.72	5.25	35"	24"	30"
42"	29"	3.13	4.06	4.09	4.20	4.45	4.99	5.06	5.28	5.76	5.93	6.03	6.36	7.09	42"	29"	36"
49"	33"	3.83	5.00	5.04	5.18	5.48	6.16	6.24	6.52	7.12	7.32	7.44	7.86	8.76	49"	33"	42"
57"	38"	4.87	6.31	6.36	6.53	6.91	7.74	7.84	8.18	8.93	9.18	9.33	9.85	10.96	57"	38"	48"
64"	43"	5.88	7.64	7.70	7.91	8.37	9.40	9.52	9.94	10.86	11.15	11.33	11.97	13.33	64"	43"	54"
71"	47"	7.80	10.15	10.23	10.51	11.12	12.49	12.65	13.22	14.43	14.85	15.10	15.94	17.77	71"	47"	60"

Note: Use the guidelines of General Note No. 7 for selecting tabular quantities.

CONCRETE ELLIPTICAL PIPE

Rise	Span	Opening Area (SF) Number Of Pipes 1	2	3	4	Dimensions A	B	C	E	F	G	S	X 0°	15°	30°	45°
12"	18"	1.3	2.6	3.9	5.2	1'-8"	1'-2"	3'-9"	1'-10"	1'-2"	0'-3"	2'-10"	2'-10"	2'-11"	3'-3"	4'-0"
14"	23"	1.8	3.6	5.4	7.2	1'-10"	1'-3"	4'-2½"	1'-11"	1'-3"	8½"	3'-5"	3'-5"	3'-6"	3'-11"	4'-10"
19"	30"	3.3	6.6	9.9	13.2	2'-3"	1'-4"	5'-1½"	2'-0"	1'-4"	1'-7½"	4'-2"	4'-2"	4'-4"	4'-10"	5'-11"
24"	38"	5.1	10.2	15.3	20.4	2'-8"	1'-5"	6'-3"	2'-1"	1'-5"	2'-9"	5'-2"	5'-2"	5'-4"	6'-0"	7'-4"
29"	45"	7.4	14.8	22.2	29.6	3'-1"	1'-6"	7'-0"	2'-2"	1'-6"	3'-6"	6'-0"	6'-0"	6'-3"	6'-11"	8'-6"
34"	53"	10.2	20.4	30.6	40.8	3'-6"	1'-7"	7'-11½"	2'-3"	1'-7"	4'-5½"	7'-1"	7'-1"	7'-4"	8'-2"	10'-0"
38"	60"	12.9	25.8	38.7	51.6	3'-10"	1'-8"	8'-9"	2'-4"	1'-8"	5'-3"	7'-11"	7'-11"	8'-2"	9'-2"	11'-2"
43"	68"	16.6	33.2	49.8	66.4	4'-3"	1'-10"	9'-8½"	2'-6"	1'-10"	6'-2½"	8'-10"	8'-10"	9'-2"	10'-2"	12'-6"
48"	76"	20.5	41.0	61.5	82.0	4'-8"	2'-1"	10'-8"	2'-9"	2'-0"	7'-2"	9'-9"	9'-9"	10'-1"	11'-3"	13'-9"
53"	83"	24.8	49.6	74.4	99.2	5'-1"	2'-6"	11'-7"	3'-2"	2'-6"	8'-1"	10'-7"	10'-7"	10'-11"	12'-3"	15'-0"
58"	91"	29.5	59.0	88.5	118.0	5'-6"	2'-10"	12'-6½"	3'-6"	2'-10"	9'-0½"	11'-4"	11'-4"	11'-9"	13'-1"	16'-0"

Rise	Span	Class I Concrete (CY) – Number Of Pipe And Skew Angle Of Pipe: Single 0°	Double 0°	15°	30°	45°	Triple 0°	15°	30°	45°	Quadruple 0°	15°	30°	45°	Rise	Span	Approx Equiv. Round Pipe
12"	18"	1.09	1.45	1.46	1.51	1.60	1.80	1.82	1.91	2.09	2.16	2.20	2.33	2.60	12"	18"	15"
14"	23"	1.36	1.82	1.84	1.89	2.01	2.29	2.32	2.43	2.68	2.75	2.80	2.97	3.33	14"	23"	18"
19"	30"	1.89	2.55	2.57	2.65	2.82	3.22	3.27	3.43	3.77	3.88	3.95	4.19	4.70	19"	30"	24"
24"	38"	2.64	3.55	3.58	3.69	3.93	4.48	4.54	4.77	5.24	5.39	5.49	5.82	6.53	24"	38"	30"
29"	45"	3.32	4.48	4.52	4.66	4.96	5.64	5.72	6.00	6.60	6.80	6.92	7.34	8.24	29"	45"	36"
34"	53"	4.24	5.76	5.81	6.00	6.39	7.29	7.40	7.76	8.55	8.81	8.97	9.52	10.70	34"	53"	42"
38"	60"	5.22	7.16	7.23	7.46	7.96	9.10	9.24	9.70	10.71	11.05	11.25	11.95	13.46	38"	60"	48"
43"	68"	6.63	9.01	9.09	9.38	10.00	11.39	11.56	12.13	13.36	13.77	14.02	14.88	16.73	43"	68"	54"
48"	76"	8.66	11.74	11.85	12.22	13.02	14.82	15.04	15.77	17.37	17.91	18.23	19.34	21.74	48"	76"	60"
53"	83"	12.50	16.96	16.98	17.67	18.83	21.47	21.78	22.86	25.18	25.97	26.44	28.06	31.55	53"	83"	66"
58"	91"	16.46	22.26	22.46	23.16	24.66	28.05	28.46	29.85	32.85	33.85	34.46	36.55	41.05	58"	91"	72"

STATE OF FLORIDA DEPARTMENT OF TRANSPORTATION
ROAD DESIGN

STRAIGHT CONCRETE ENDWALLS SINGLE AND MULTIPLE PIPE

	Names	Dates
Designed by	HAB/EGP	73/83
Drawn by	RWR/HSD	83
Checked by	JBW/JVG	83

F.H.W.A. Approved: 10/6/83

Approved By: State Design Engineer, Roadway

Revision No. 86 | Sheet No. 2 of 2 | Index No. 250

BILL OF REINFORCING STEEL					
MARK	SIZE	Nº REQ'D.	LENGTH	LOCATION	BENDING
A	Nº 4	32	4'-2"	Footing	Straight
B_1	Nº 4	13	3[illegible]"	Footing and Wall	Straight
B_2	Nº 4	4	12'-	Wall	Straight
B_3	Nº 4	4	13'-9"	Wall	Straight
C	Nº 4	26	9'-9"	Wall	Bend
D	Nº 4	18	7'-10"	Wall	Straight
E	Nº 4	8	1'-8"	Footing and Wall	Straight

BENDING DIAGRAM

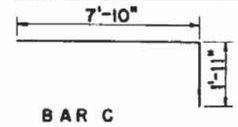

BAR C

NOTE: All bar dimensions are out to out

ESTIMATED QUANTITIES

ITEM	UNIT	QUANTITY
Concrete Class II	Cu. Yd.	10.89
Reinforcing Steel	Pound	705

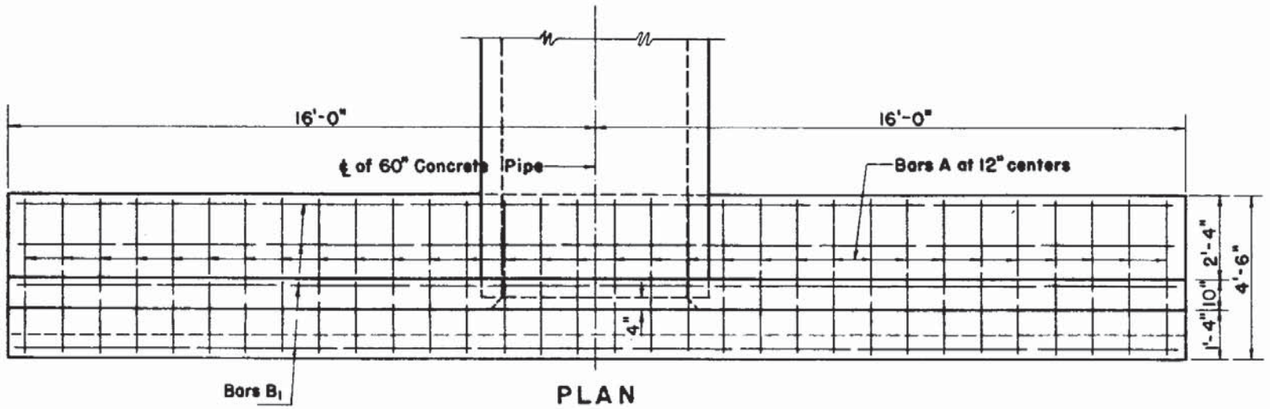

PLAN
(Showing Bar In Footing)

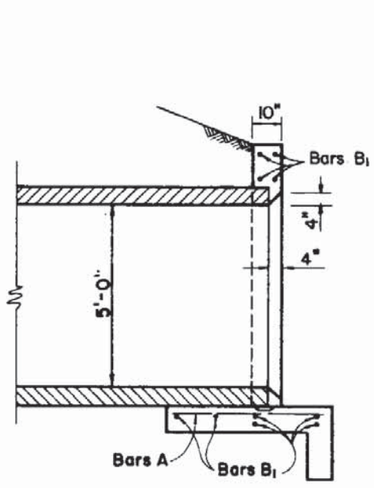

SECTION A A

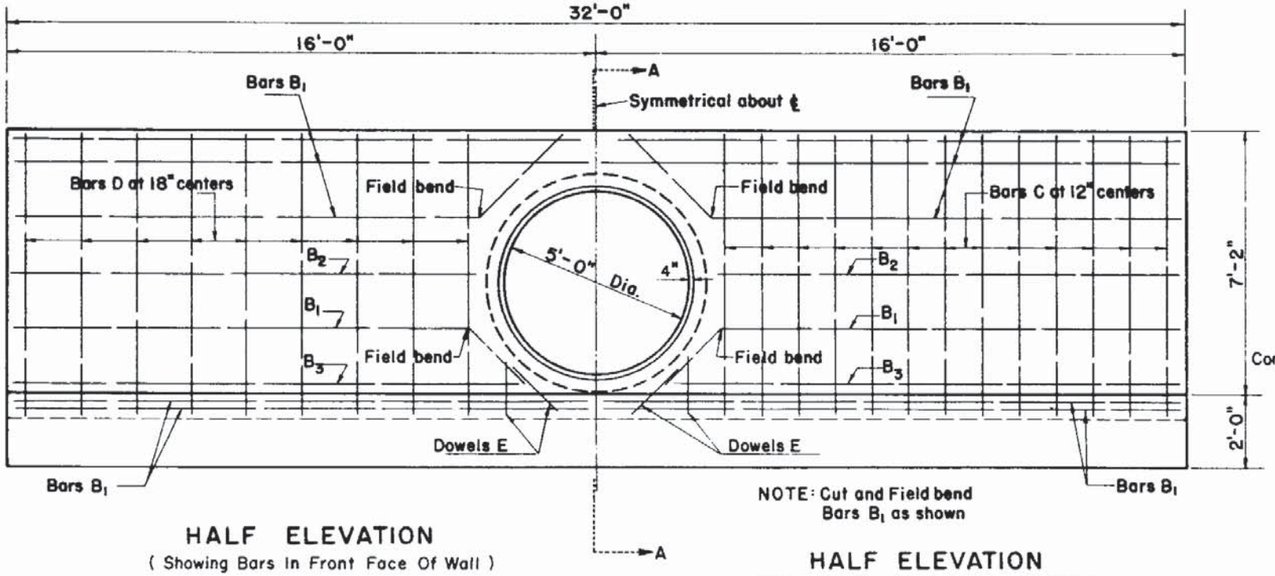

HALF ELEVATION
(Showing Bars In Front Face Of Wall)

NOTE: Cut and Field bend Bars B_1 as shown

HALF ELEVATION
(Showing Bars In Back Face Of Wall)

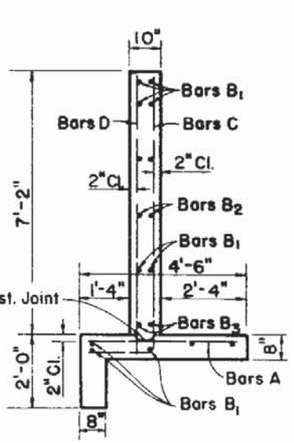

TYPICAL SECTION
THRU ENDWALL

GENERAL NOTES

1. Design Specification: A.A.S.H.T.O., 1977
2. Reinforcing Steel: Grade 40 or 60
3. Concrete: Class II
4. Chamfer: All exposed edges and corners to be chamfered $\frac{3}{4}$" unless otherwise shown.
5. Sodding shall be in accordance with Index No. 281 and paid for under the contract unit price for Sodding SY.
6. Endwall to be paid for under the contract unit price for Class II Concrete (Endwalls) CY and Reinforcing Steel (Roadway) LB.

STATE OF FLORIDA DEPARTMENT OF TRANSPORTATION
ROAD DESIGN

STRAIGHT CONCRETE ENDWALLS
SINGLE AND DOUBLE 60" CONCRETE PIPE

	Names	Dates
Designed by		
Drawn by	TWJ	11/49
Checked by	WHM	11/49
F.H.W.A. Approved		3/20/75

Approved By
Deputy Design Engineer, Roadways

Revision No.	Sheet No.	Index No.
84	1 of 2	251

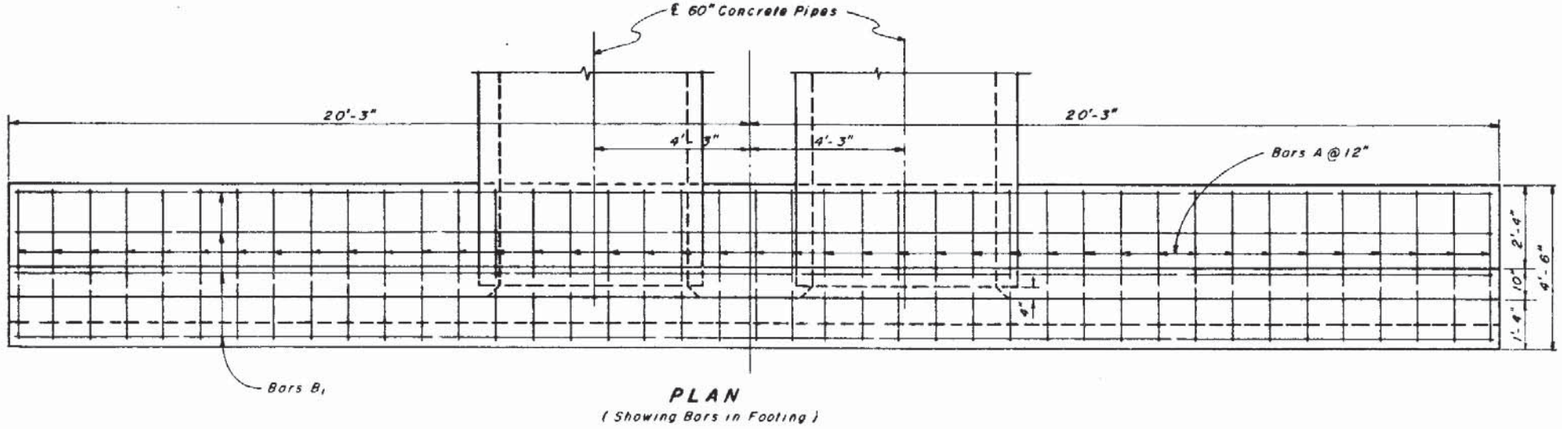

PLAN
(Showing Bars in Footing)

BILL OF REINFORCING STEEL

MARK	SIZE	No. REQ'D	LENGTH	LOCATION	BENDING
A	4	41	4'-2"	Footing	Straight
B_1	4	9	40'-2"	Footing & Wall	Straight
B_2	4	4	12'-6"	Wall	Straight
B_3	4	4	13'-9"	Wall	Straight
B_4	4	4	6'-0"	Wall	Field Bend
B_5	4	2	2'-2"	Wall	Straight
B_6	4	8	15'-0"	Wall	Field Bend
C	4	29	9'-9"	Footing & Wall	Bend
D	4	20	7'-10"	Footing & Wall	Straight
E	4	16	1'-8"	Footing & Wall	Straight

BENDING DIAGRAM

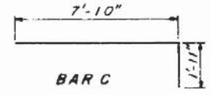

NOTE All Bar dimensions are out to out.

ESTIMATED QUANTITIES

ITEM	UNIT	QUANTITY
Class II Concrete	Cu. Yd.	13.19
Reinforcing Steel	Lb.	834

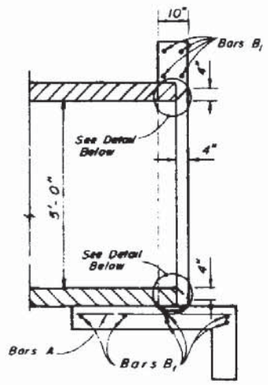

SECTION AA

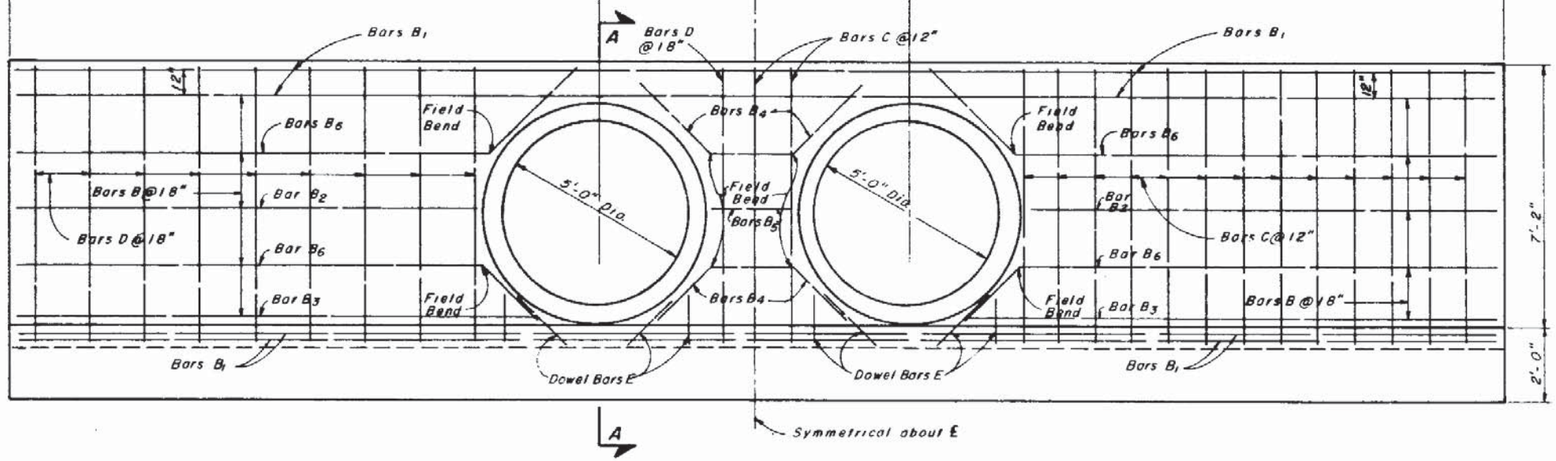

HALF ELEVATION
(Showing Bars in Front Face of Wall)

HALF ELEVATION
(Showing Bars in Back Face of Wall)

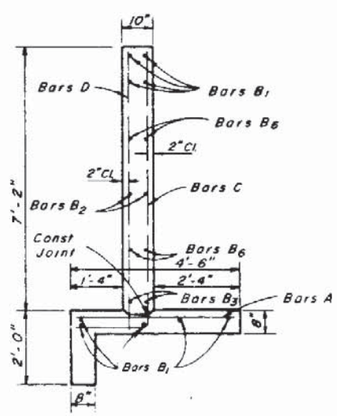

TYPICAL SECTION
THRU ENDWALL

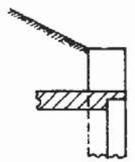

ALTERNATE ENTRANCE

Note: See Sheet 1 of 2 for General Notes.

STATE OF FLORIDA DEPARTMENT OF TRANSPORTATION
ROAD DESIGN

STRAIGHT CONCRETE ENDWALLS
SINGLE AND DOUBLE 60" CONCRETE PIPE

	Names	Dates
Designed By		
Drawn By	TWJ	11/49
Checked By	WHM	11/49
F.H.W.A. Approved		3/20/75

Approved By
Deputy Design Engineer, Roadways

Revision No.	Sheet No.	Index No.
83	2 of 2	251

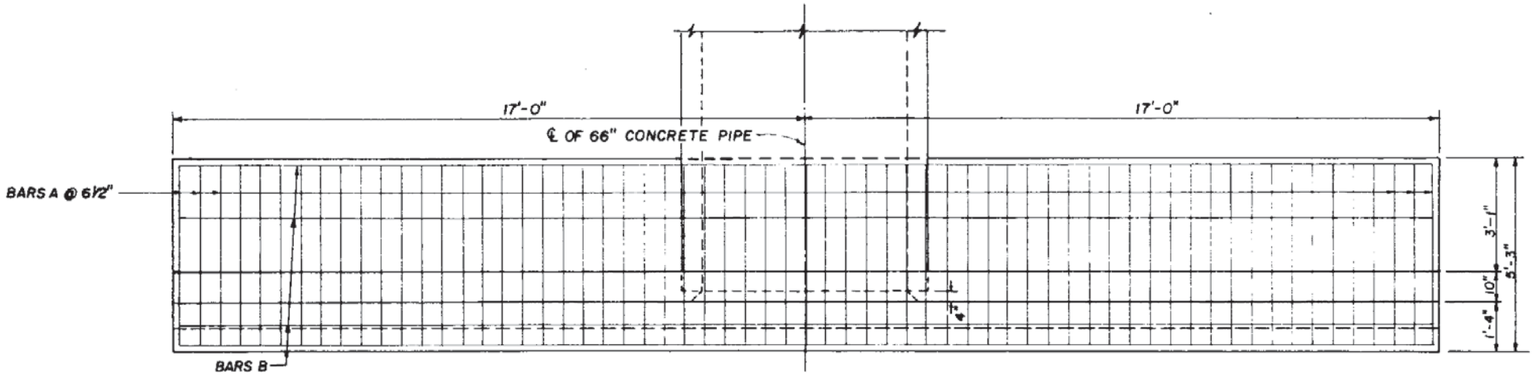

PLAN

(Showing Bars In Footing)

BILL OF REINFORCING STEEL

MARK	SIZE	NO. REQ'D	LENGTH	LOCATION	BENDING
A	5	63	4'-11"	FOOTING	STRAIGHT
B	4	17	33'-8"	FOOTING & WALL	"
C	5	34	9'-10"	WALL	BEND
D	4	10	8'-1"	"	STRAIGHT
E	4		1'-8"	"	"

BENDING DIAGRAMS

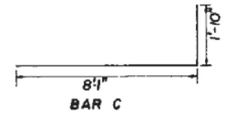

BAR C

NOTE: ALL BAR DIMENSIONS ARE OUT TO OUT

ESTIMATED QUANTITIES

ITEM	UNIT	QUANTITY
CONCRETE, CLASS II	CU. YD.	12.60
REINFORCING STEEL	LB.	1167

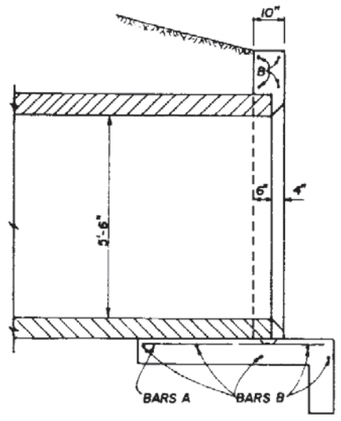

SECTION A A

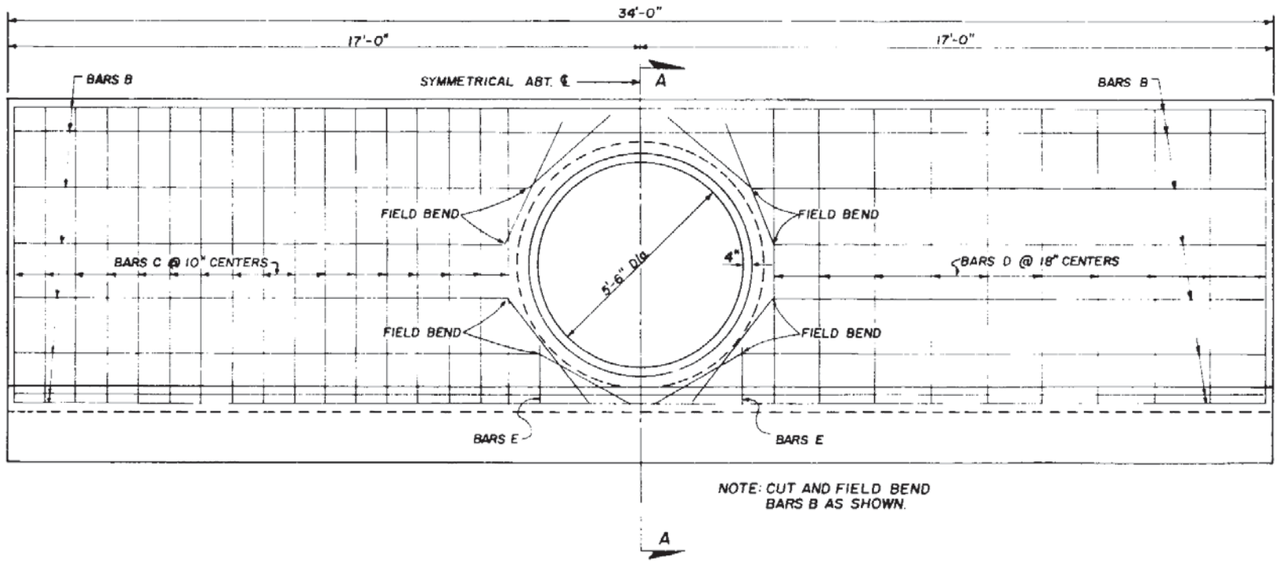

NOTE: CUT AND FIELD BEND BARS B AS SHOWN.

HALF ELEVATION

(Showing Bars In Back Face Of Wall)

HALF ELEVATION

(Showing Bars In Front Face Of Wall)

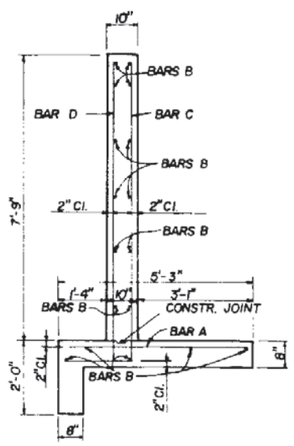

TYPICAL SECTION THRU ENDWALL

GENERAL NOTES

1. Design Specifications: A.A.S.H.T.O., 1977
2. Reinforcing Steel: Grade 40 or 60
3. Concrete: Class II
4. Chamfer: All exposed edges and corners to be chamfered $\frac{3}{4}$" unless otherwise shown.
5. Sodding shall be in accordance with Index No. 281 and paid for under the contract unit price for Sodding SY.
6. Endwall to be paid for under the contract unit price for Class II Concrete (Endwalls) CY and Reinforcing Steel (Roadway) LB.

STATE OF FLORIDA DEPARTMENT OF TRANSPORTATION
ROAD DESIGN

STRAIGHT CONCRETE ENDWALLS
SINGLE AND DOUBLE 66" CONCRETE PIPE

	Names	Dates
Designed by	JLW	3/54
Drawn by		
Checked by	RCB	3/54
F. H. W. A. Approved		10/7/80

Approved By
Deputy Design Engineer, Roadways

Revision No.	Sheet No.	Index No.
84	1 of 2	252

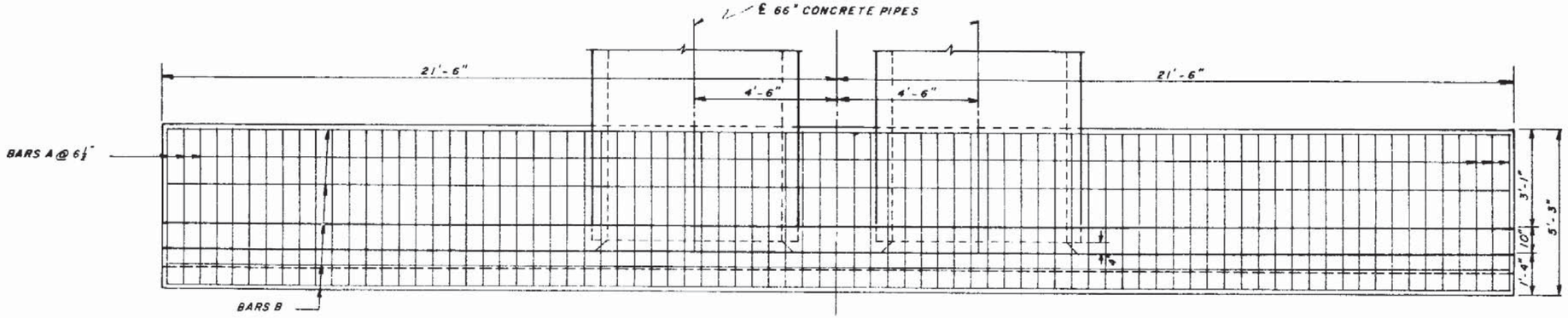

PLAN
(Showing Bars In Footing)

BILL OF REINFORCING STEEL

MARK	SIZE	NO. RE'D.	LENGTH	LOCATION	BENDING
A	5	80	4'-11"	FOOTING	STRAIGHT
B	4	17	42'-8"	FOOTING & WALL	STRAIGHT
C	5	37	9'-11"	WALL	BEND
D	4	22	8'-1"	WALL	STRAIGHT
E	4	8	1'-8"	WALL	STRAIGHT

BENDING DIAGRAMS

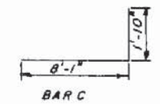

BAR C

NOTE: ALL BAR DIMENSIONS ARE OUT TO OUT

ESTIMATED QUANTITIES

ITEM	UNIT	QUANTITY
CONCRETE, CLASS II	C.Y.	15.33
REINFORCING STEEL	L.B.	1,406

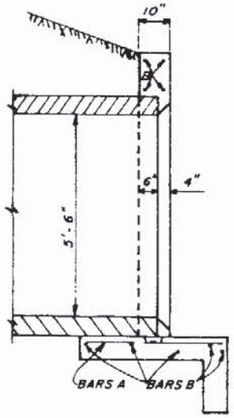

SECTION AA

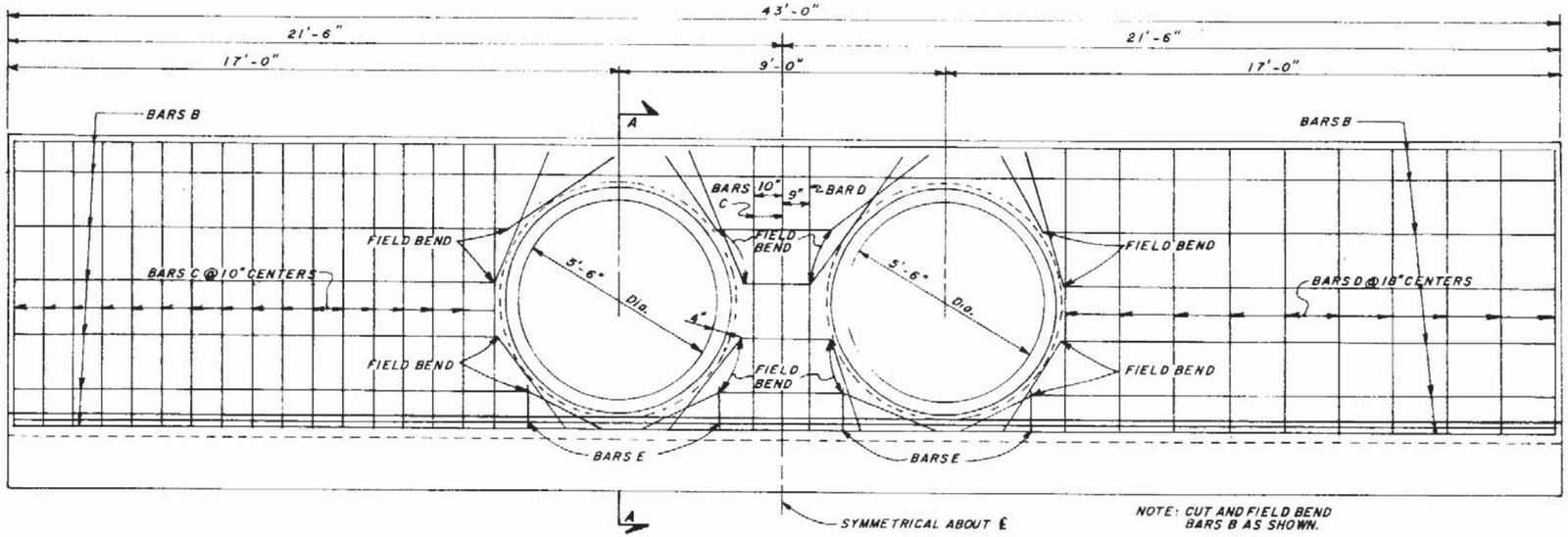

HALF ELEVATION
(Showing Bars In Back Face Of Wall)

NOTE: CUT AND FIELD BEND BARS B AS SHOWN.

HALF ELEVATION
(Showing Bars In Front Face Of Wall)

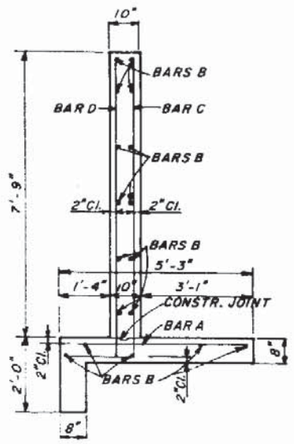

TYPICAL SECTION
THRU ENDWALL

Note. See Sheet 1 of 2 for General Notes.

STATE OF FLORIDA DEPARTMENT OF TRANSPORTATION
ROAD DESIGN

STRAIGHT CONCRETE ENDWALLS
SINGLE AND DOUBLE 66" CONCRETE PIPE

	Names	Dates
Designed by	JSP	11/79
Drawn by	FWT	11/79
Checked by		
FHWA Approved: 10/7/80		

Approved By
Deputy Design Engineer, Roadways

Revision No.	Sheet No.	Index No.
84	2 of 2	252

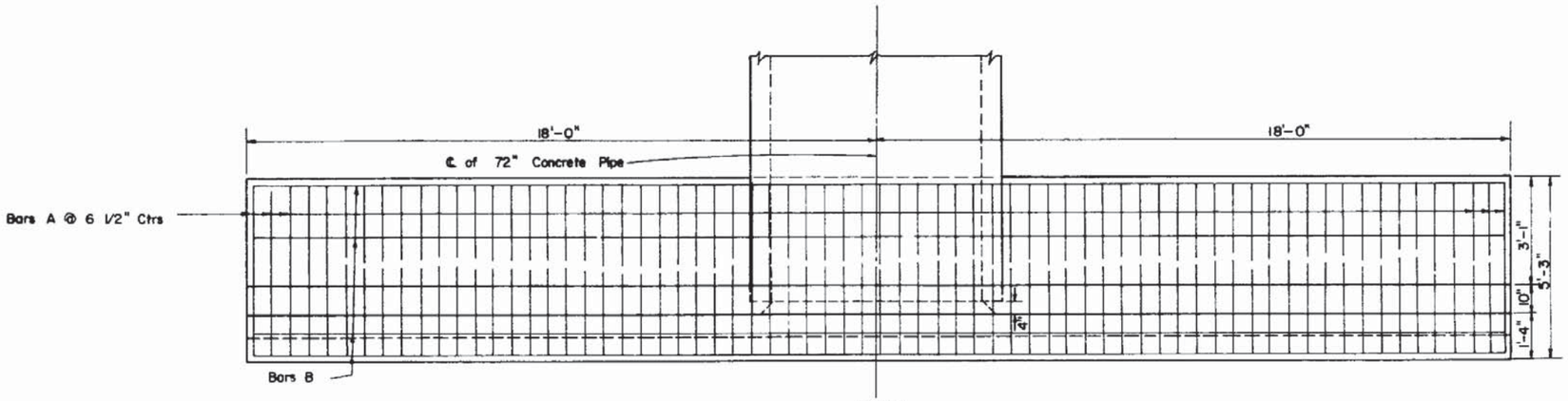

PLAN
(Showing Bars In Footing)

BILL OF REINFORCING STEEL					
MARK	SIZE	No. Req'd	LENGTH	LOCATION	BENDING
A	5	88	4' – 11"	FOOTING	STRAIGHT
B	4	17	35' – 8"	FOOTING & Wall	"
C	5	34	10' – 5"	WALL	BEND
D	4	20	8' – 7"	WALL	STRAIGHT
E	4	4	2' – 6"	WALL	"
F	4	4	1' – 6"	WALL	"

BENDING DIAGRAMS

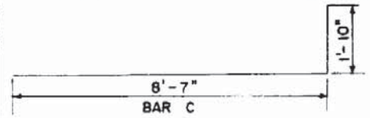

NOTE: All bar dimensions are out to out

ESTIMATED QUANTITIES		
ITEMS	UNIT	QUANTITY
CONCRETE CLASS II	CU. YD.	13.76
REINFORCING STEEL	LB.	1249

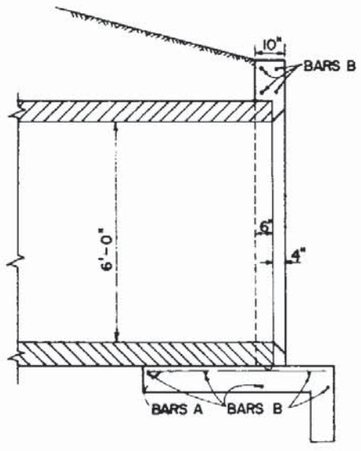

SECTION A A

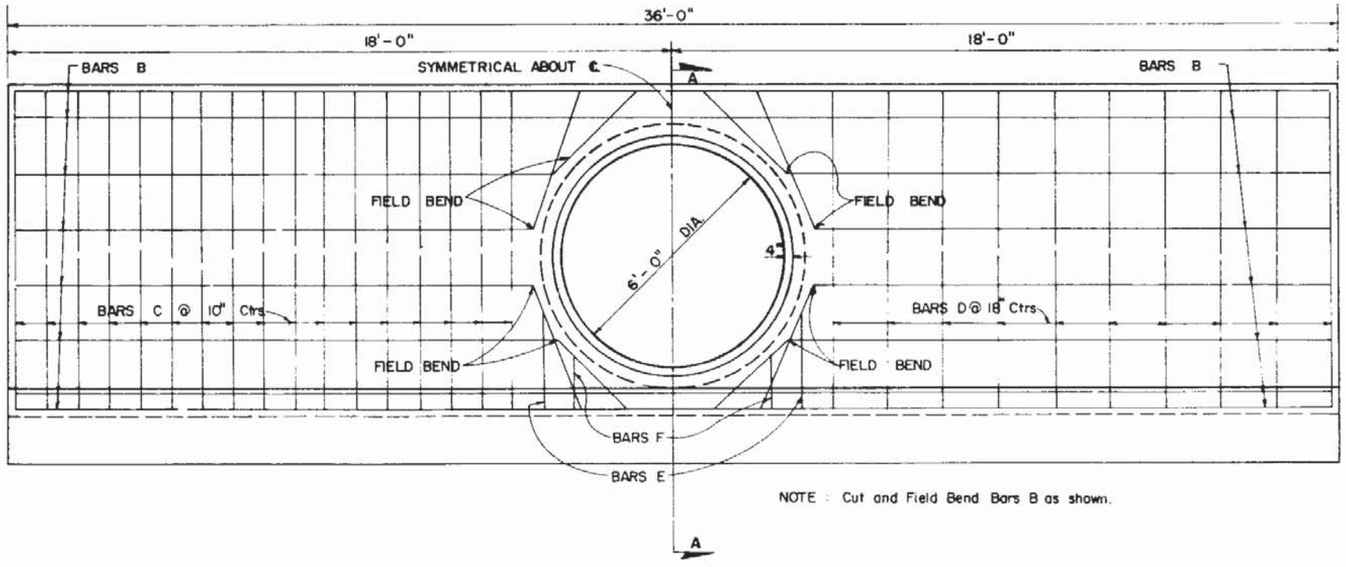

NOTE: Cut and Field Bend Bars B as shown.

HALF ELEVATION
(Showing Bars In Back Face Of Wall)

HALF ELEVATION
(Showing Bars In Front Face Of Wall)

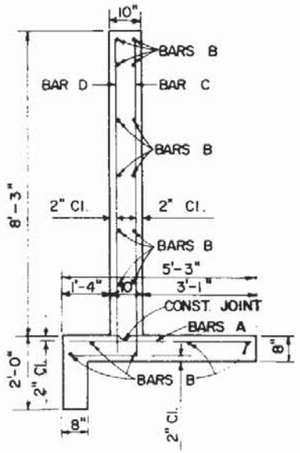

TYPICAL SECTION
THRU ENDWALL

GENERAL NOTES

1. Design Specification: A.A.S.H.T.O., 1977
2. Reinforcing Steel: Grade 40 or 60
3. Concrete: Class II
4. Chamfer: All exposed edges and corners to be chamfered $\frac{3}{4}$" unless otherwise shown.
5. Sodding shall be in accordance with Index No. 281 and paid for under the contract unit price for Sodding SY.
6. Endwall to be paid for under the contract unit price for Class II Concrete (Endwalls) CY and Reinforcing Steel (Roadway) LB.

STATE OF FLORIDA DEPARTMENT OF TRANSPORTATION
ROAD DESIGN

STRAIGHT CONCRETE ENDWALLS
SINGLE AND DOUBLE 72" CONCRETE PIPE

	Names	Dates
Designed by	EVC	10/55
Drawn by		
Checked by	WHW	10/55
F.H.A. Approved		3/20/75

Approved By
Deputy Design Engineer, Roadways

Revision No.	Sheet No.	Index No.
84	1 of 2	253

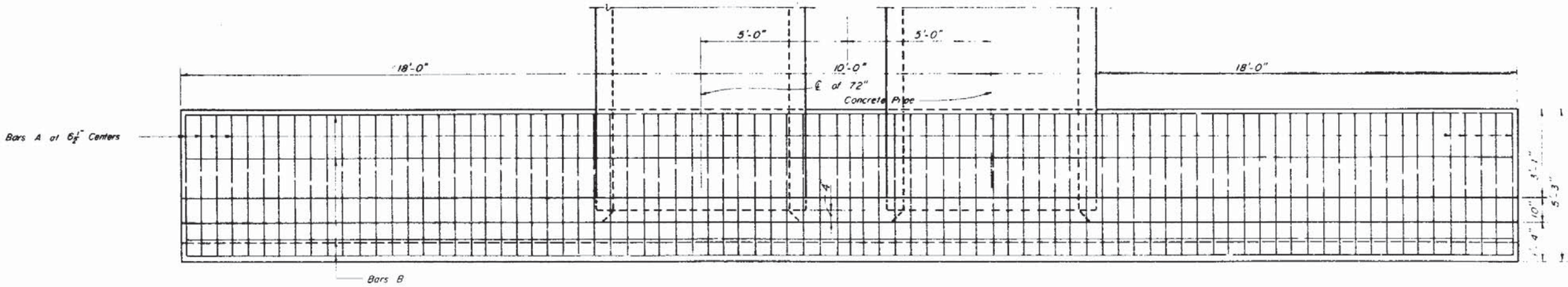

PLAN
(Showing Bars in Footing)

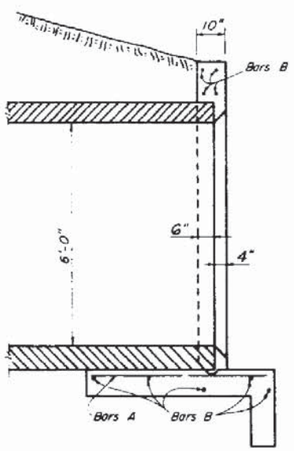

SECTION A A

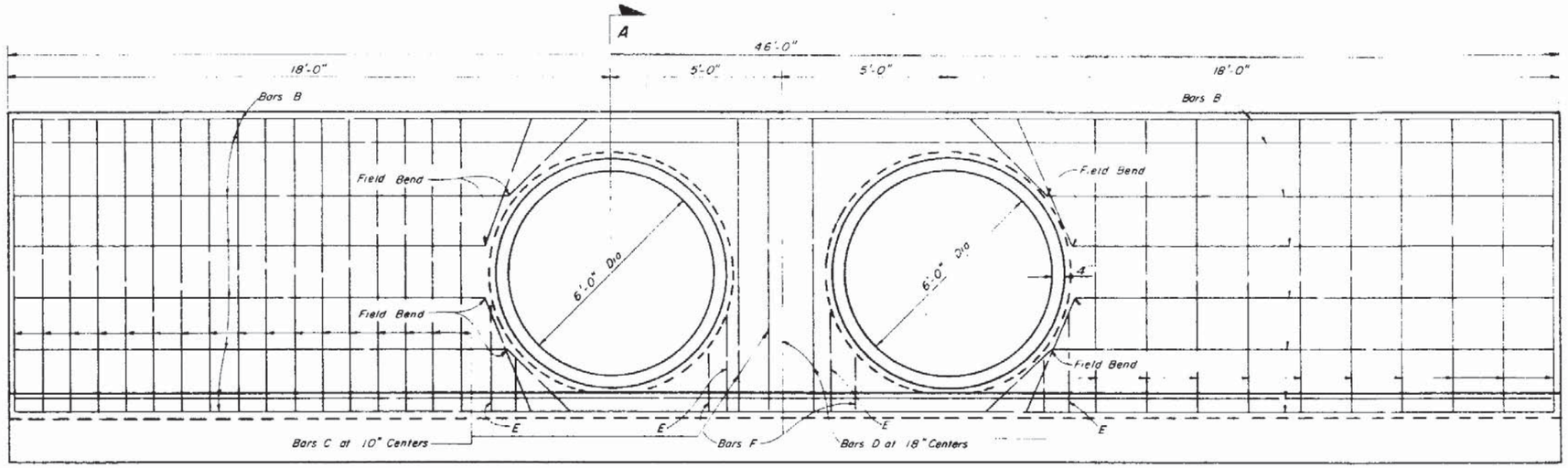

NOTE Cut and Field Bend Bars B as shown

HALF ELEVATION
(Showing Bars In Back Face Of Wall)

HALF ELEVATION
(Showing Bars In Front Face Of Wall)

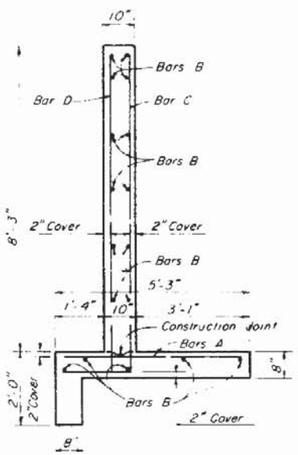

TYPICAL SECTION
THRU ENDWALL

Note: See Sheet 1 of 2 for General Notes.

BILL OF REINFORCING STEEL					
Mark	Size	No. Req'd	Length	Location	Bending
A	5	85	4'-11"	Footing	Straight
B	4	17	45'-8"	Footing & Wall	"
C	5	38	10'-5"	Wall	Bend
D	4	23	8'-7"	Wall	Straight
E	4	8	2'-6"	Wall	"
F	4	8	1'-6"	Wall	"

BENDING DIAGRAM

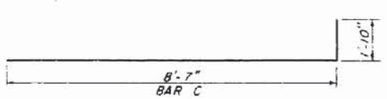

NOTE: All Bar dimensions are out-to-out

ESTIMATED QUANTITIES		
Item	Unit	Quantity
Class II Concrete	Cu. Yd	16.74
Reinforcing Steel	Lb	1519

STATE OF ALASKA DEPARTMENT OF TRANSPORTATION
ROAD DESIGN

STRAIGHT CONCRETE ENDWALLS
SINGLE AND DOUBLE 72" CONCRETE PIPE

	Name	Date
Designed By	EVC	10/55
Detailed By		
Checked By	WHW	10/55
Quantities Approved		7/7/75

Approved By
Deputy Design Engineer, Roadways

Revision No.	Sheet No.	Index No.
84	2 of 2	253

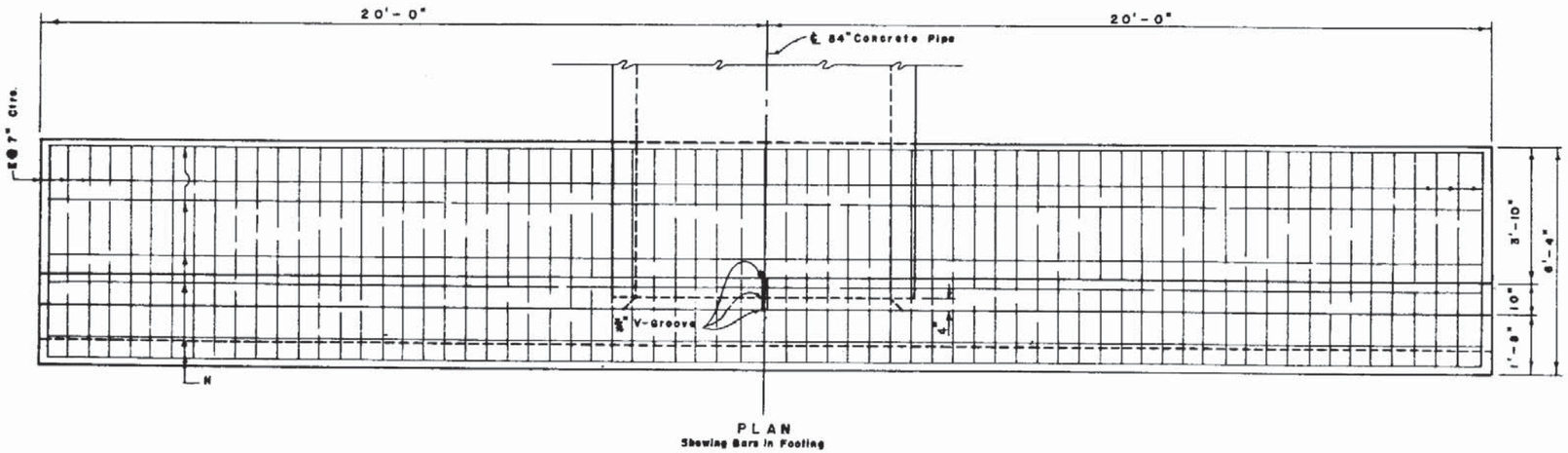

PLAN
Showing Bars in Footing

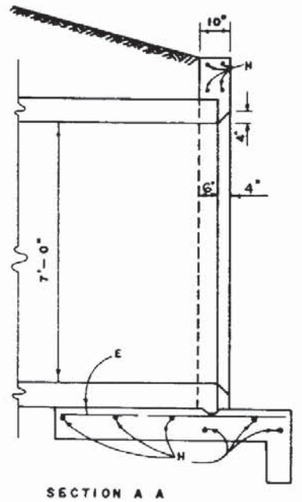

SECTION A A

BILL OF REINFORCING STEEL			
MARK	SIZE	NO. REQ'D.	LENGTH
E	6	69	6'-0"
H	4	20	39'-8"
V_1	6	26	12'-2"
V_2	6	26	7'-10"
V_3	4	22	10'-0"
V_4	4	4	2'-0"

BENDING DIAGRAM

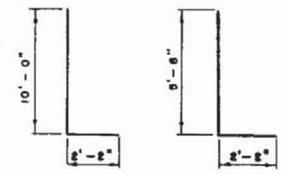

BAR V1 BAR V2

NOTE: All Bar Dimensions are out-to-out.

ESTIMATED QUANTITIES		
ITEM	UNIT	QUANTITY
Concrete, Class II	Cu. Yd.	19.3
Reinforcing Steel	Lb.	2,085

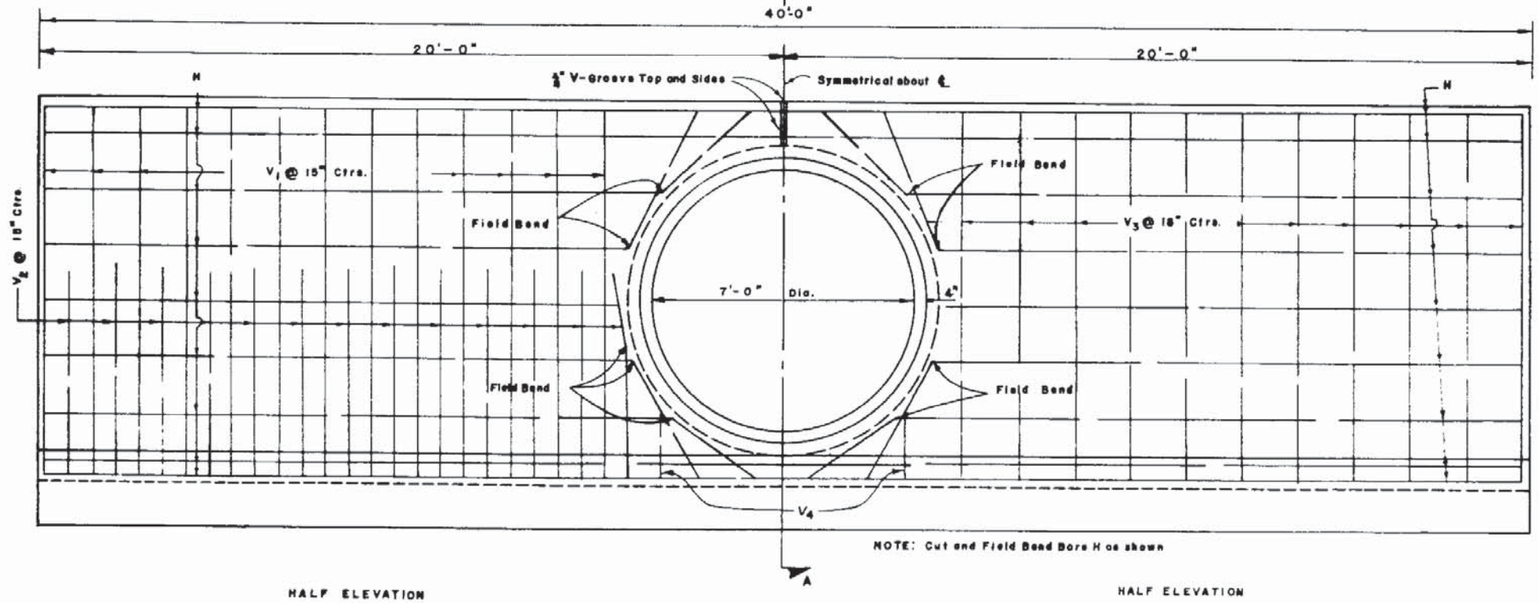

NOTE: Cut and Field Bend Bars H as shown

HALF ELEVATION
Showing Bars in Back Face of Wall

HALF ELEVATION
Showing Bars in Front Face of Wall

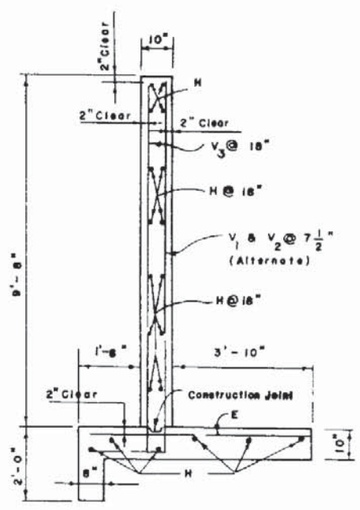

TYPICAL SECTION THRU
ENDWALL

GENERAL NOTES

1. Design Specifications: A.A.S.H.T.O., 1977
2. Reinforcing Steel: Grade 40 or 60
3. Concrete: Class II
4. Chamfer: All exposed edges and corners to be chamfered ¾" unless otherwise shown.
5. Sodding shall be in accordance with Index No. 281 and paid for under the contract unit price for Sodding SY.
6. Endwall to be paid for under the contract unit price for Class II Concrete (Endwalls) CY and Reinforcing Steel (Roadway) LB.

STATE OF FLORIDA DEPARTMENT OF TRANSPORTATION
ROAD DESIGN

STRAIGHT CONCRETE ENDWALL SINGLE 84" CONCRETE PIPE

	Names	Dates
Designed by		
Drawn by	WHW	7/58
Checked by	HCG	7/58

F.H.W.A. Approved: 3/20/75

Approved By
Deputy Design Engineer, Roadways

Revision No.	Sheet No.	Index No.
84	1 of 1	255

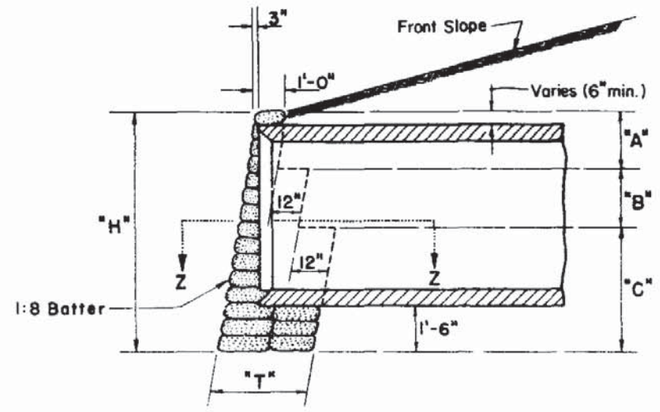

SECTION Y-Y

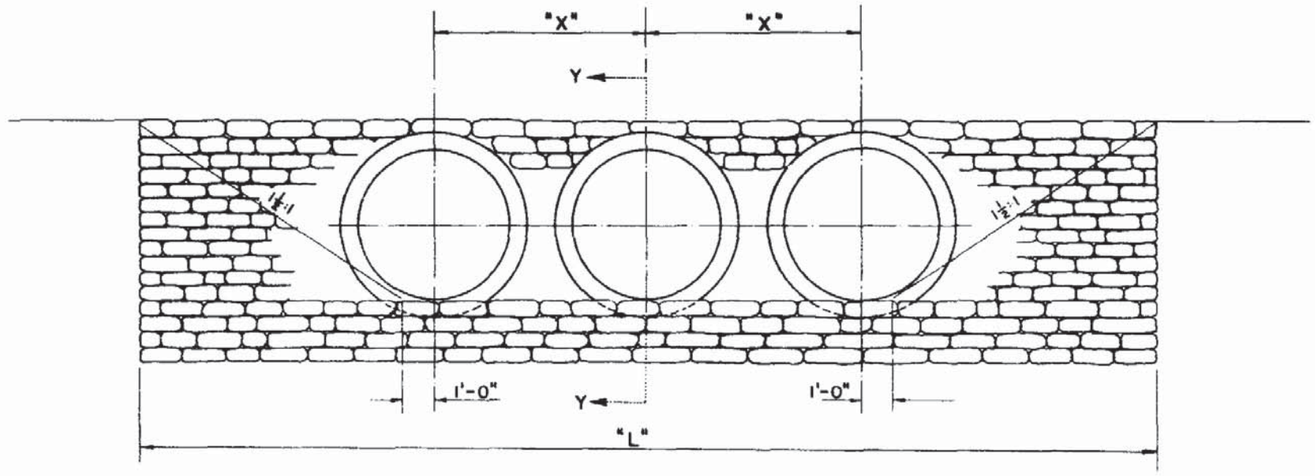

FRONT ELEVATION

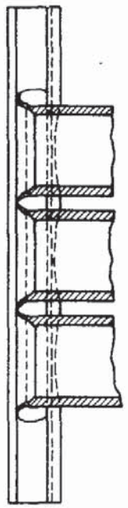

SECTION Z-Z

Note: For concrete and corrugated metal pipes. Concrete pipe shown.

TABLE OF DIMENSIONS							QUANTITIES FOR ONE ENDWALL											
SIZE OF PIPE	H	T	A	B	C	X	ONE PIPE CULVERTS			TWO PIPE CULVERTS			THREE PIPE CULVERTS			FOUR PIPE CULVERTS		
							L	RIPRAP CY		L	RIPRAP CY		L	RIPRAP CY		L	RIPRAP CY	
								CP	CMP		CP	CMP		CP	CMP		CP	CMP
18"	3'-11"	1'-0"	3'-11"	0'-0"	0'-0"	2'-10"	8'-7½"	1.1	1.2	11'-5½"	1.5	1.6	14'-3½"	1.8	1.9	17'-1½"	2.1	2.2
24"	4'-6"	2'-0"	2'-0"	2'-6"	0'-0"	3'-5"	10'-3"	2.4	2.5	13'-8"	3.1	3.2	17'-1"	3.7	3.9	20'-6"	4.3	4.6
30"	5'-1"	2'-0"	2'-0"	3'-1"	0'-0"	4'-3"	11'-10½"	3.2	3.3	16'-1½"	4.1	4.3	20'-4½"	4.9	5.3	24'-7½"	5.8	6.3
36"	5'-8"	2'-0"	2'-0"	3'-8"	0'-0"	5'-1"	13'-6"	4.1	4.2	18'-7"	5.2	5.5	23'-8"	6.3	6.8	28'-9"	7.4	8.1
42"	6'-3"	3'-0"	2'-0"	2'-0"	2'-3"	6'-0"	15'-1½"	6.2	6.4	21'-1½"	8.1	8.6	27'-1½"	10.0	10.7	33'-1½"	11.9	12.8
48"	6'-10"	3'-0"	2'-0"	2'-0"	2'-10"	6'-9"	16'-9"	7.7	8.0	23'-6"	10.0	10.6	30'-3"	12.3	13.2	37'-0"	14.6	15.8
54"	7'-5"	3'-0"	2'-0"	2'-0"	3'-5"	7'-8"	18'-4½"	9.3	9.7	26'-0½"	12.1	12.9	33'-8½"	15.0	16.2	41'-4½"	17.8	19.4
60"	8'-0"	3'-0"	2'-0"	2'-0"	4'-0"	8'-6"	20'-0"	11.0	11.6	28'-6"	14.4	15.5	37'-0"	17.8	19.3	45'-6"	21.1	23.2
66"	8'-7"	3'-0"	2'-0"	2'-0"	4'-7"	9'-3"	21'-7½"	12.9	13.6	30'-10½"	16.8	18.1	40'-1½"	20.7	22.6	49'-4½"	24.6	27.2
72"	9'-2"	3'-0"	2'-0"	2'-0"	5'-2"	10'-0"	23'-3"	15.0	15.8	33'-3"	19.4	21.0	43'-3"	23.9	26.2	53'-3"	28.3	31.5
78"	9'-9"	3'-0"	2'-0"	2'-0"	5'-9"	10'-9"	24'-10½"	17.2	18.1	35'-7½"	22.2	24.1	46'-4½"	27.2	30.1	57'-1½"	32.2	36.1
84"	10'-4"	3'-0"	2'-0"	2'-0"	6'-4"	11'-8"	26'-6"	19.5	20.7	38'-2"	25.3	27.6	49'-10"	31.1	34.5	61'-6"	36.9	41.4

STATE OF FLORIDA DEPARTMENT OF TRANSPORTATION
ROAD DESIGN

STRAIGHT SAND-CEMENT ENDWALLS

	Names	Dates
Designed by		
Drawn by	EH	5/48
Checked by	HB	5/48
F.H.W.A. Approved		12/6/76

Approved By
Deputy Design Engineer, Roadways

Revision No.	Sheet No.	Index No.
86	1 of 1	258

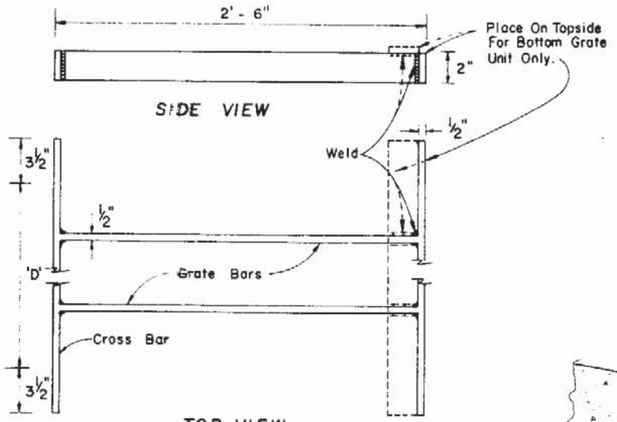

GRATE TYPE NO. 1

Pipe Size	Grate Bars Reqd.	Grate Wt.
15"	2	28.93

Bars to be evenly spaced across dimension 'D'.
All bars ½" x 2"

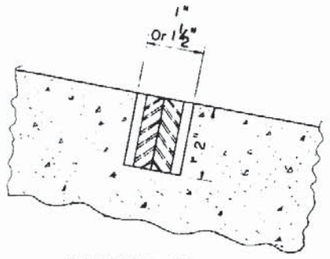

SECTION AA

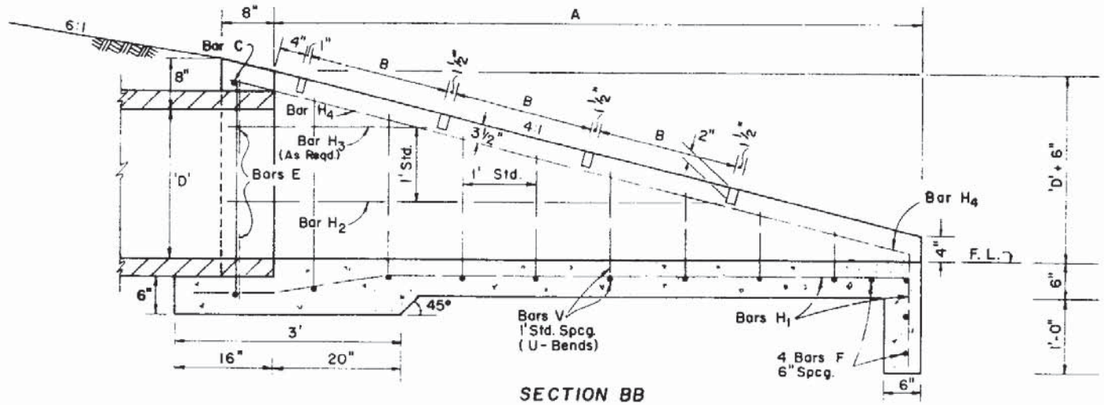

SECTION BB

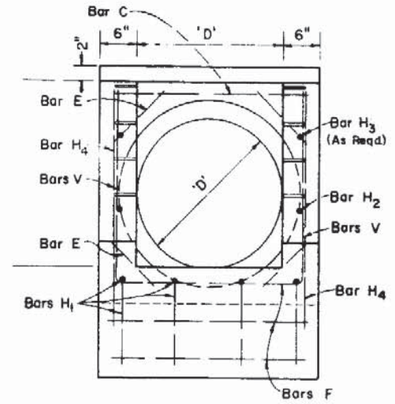

END VIEW

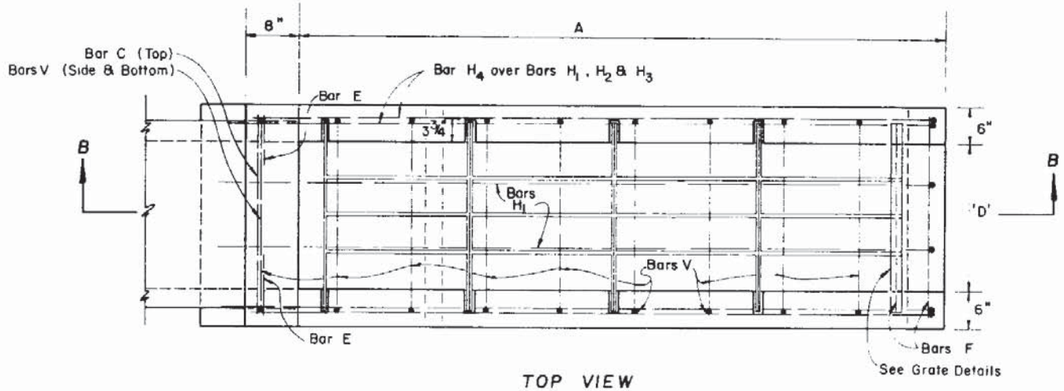

TOP VIEW

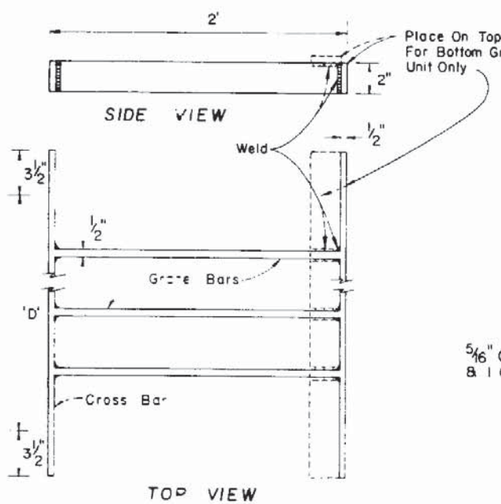

GRATE TYPE NO. 2

Pipe Size	Grate Bars Reqd.	Grate Wt.
18"	3	33.69
24"	4	43.63
30"	5	53.55

Bars to be evenly spaced across dimension 'D'.
All bars ½" x 2"

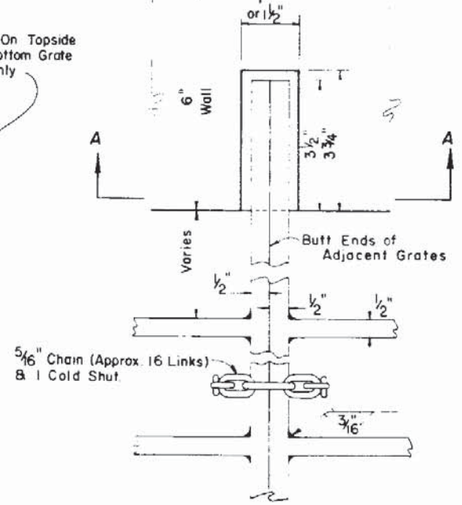

TOP VIEW

GRATE, SEAT, WELD & CHAIN DETAIL

TABLE OF DIMENSIONS AND QUANTITIES

Slope	Pipe Size D	A	B	Conc. Class I (C.Y.)	Reinf Steel (Lbs.)	Number Of Grates Req'd Type No. 1	Number Of Grates Req'd Type No. 2	Total Grate Wt. (Lbs.)	Sodding (SY)	Slope Transition Offset	Slope Transition L
4:1	15"	5.67'	2.38'	0.85	56	2	0	57.86	15	4.2'	42'
	18"	6.67'	1.875'	1.01	73	0	3	101.08	16	4.8'	48'
	24"	8.67'	1.875'	1.65	97	0	4	174.52	19	5.8'	58'
	30"	10.67'	1.875'	2.33	129	0	5	267.75	21	6.9'	69'

GENERAL NOTES

1. This endwall is to be used only in the clear recovery area for the drainage of medians and other areas having low design velocities and negligible debris.
2. Reinforcing Steel: All bars are size # 4. Spacings shown are center to center. Laps to be 12" minimum. Clearance is 2" except as noted.
   Square welded wire fabric (two cages max.) having an equivalent cross sectional area (0.20 sq. in.) may be substituted for bar reinforcement.
3. Grates to be ASTM A 588 weathering steel. If exposed to salt water, (Specific locations will be designated in plans.) grate to be fabricated from ASTM A 572, Grade 50, then galvanized.
4. Endwall to be paid for per each. Payment shall include cost of concrete, reinforcing steel, grate, and accessories. Quantities shown are for estimating purposes only.
5. Sod slopes 5' each side and above endwall. Sodding to be paid for under contract unit price for Sodding.
6. Precasting of this endwall will be permitted. Precast units shall conform to the dimensions shown or in accordance with approved shop drawings. Request for shop drawing approval shall be directed to the D.O.T. Engineer of Drainage.
7. Concrete meeting the requirements of A.S.T.M. C 478 (4,000 PSI) may be used in lieu of Class I concrete for precast units manufactured in plants which are under the Standard Operating Procedures for the inspection of precast drainage products.

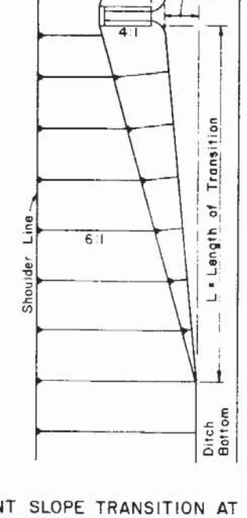

FRONT SLOPE TRANSITION AT ENDWALL

STATE OF FLORIDA DEPARTMENT OF TRANSPORTATION
ROAD DESIGN

U-TYPE CONCRETE ENDWALLS WITH GRATES 15" TO 30" PIPE

	Names	Dates
Designed by	EGR	6/77
Drawn by	HKH	6/77
Checked by	JVG	6/77
F H W A Approved:		7/15/77

Approved By
Deputy Design Engineer, Roadways

Revision No.	Sheet No.	Index No.
86	1 of 1	260

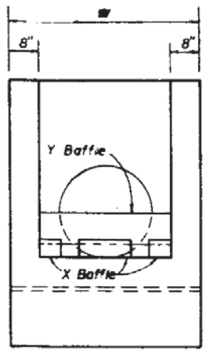

END VIEW

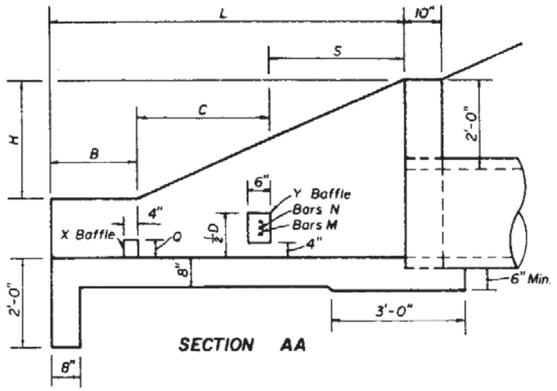

SECTION AA

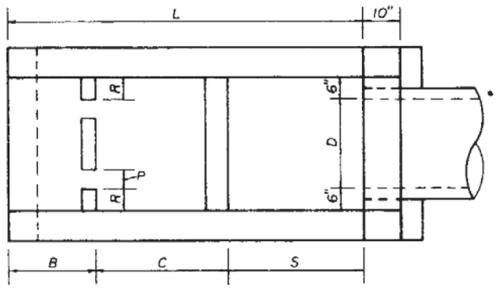

PLAN

DIMENSIONAL DETAILS

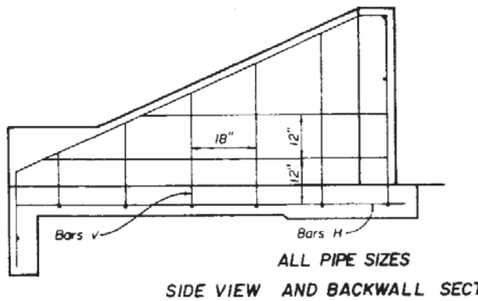

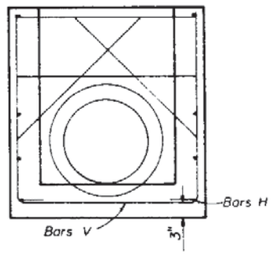

ALL PIPE SIZES

SIDE VIEW AND BACKWALL SECTION

REINFORCING DETAIL

DIMENSIONS AND QUANTITIES FOR ONE U-ENDWALL

Pipe Size D	Area Sq Ft	L	H	W	S	B	C	X Baffle P	X Baffle Q	X Baffle R	Y Baffle Reinf Steel Bar M	Y Baffle Reinf Steel Bar N	Concrete Class I Cu Yd	Reinf Steel Lbs
15"	1.23	5'-3"	2'-3 1/2"	3'-7"	2'-3"	1'-3"	2'-3"	4"	4"	4"	2 # 4	1 # 4	1.61	72
18"	1.77	6'-6"	2'-5"	3'-10"	2'-6"	1'-6"	2'-6"	4"	4"	5"	3 # 4	2 # 4	1.89	86
24"	3.14	8'-0"	2'-8"	4'-4"	3'-0"	2'-0"	3'-0"	5"	5"	6"	4 # 4	3 # 4	2.52	108
30"	4.91	9'-6"	2'-11"	4'-10"	3'-6"	2'-6"	3'-6"	5"	5"	7"	4 # 4	4 # 4	3.34	131

WITH BAFFLES

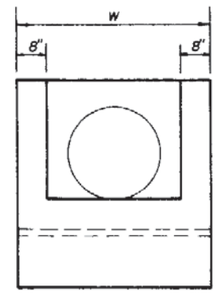

END VIEW

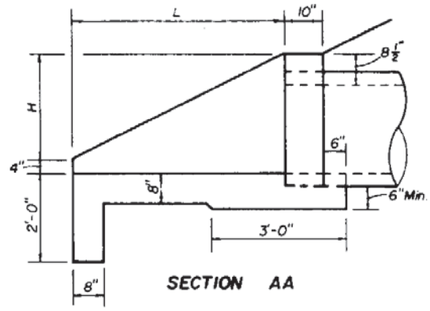

SECTION AA

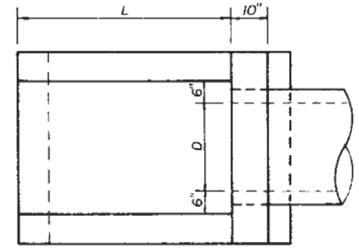

PLAN

DIMENSIONAL DETAILS

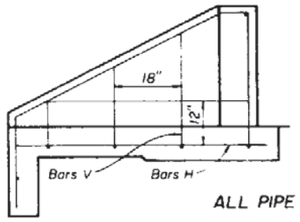

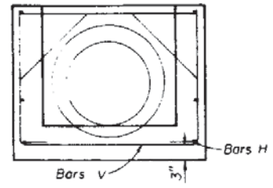

ALL PIPE SIZES

SIDE VIEW AND BACKWALL SECTION

REINFORCING DETAIL

DIMENSIONS AND QUANTITIES FOR ONE U-ENDWALL

Pipe Size D	Area Sq Ft	L	H	W	Concrete Class I Cu Yd	Reinf Steel Lbs
15"	1.23	3'-3"	1'-7 1/2"	3'-7"	0.85	39
18"	1.77	3'-9"	1'-10 1/2"	3'-10"	1.05	43
24"	3.14	4'-9"	2'-4 1/2"	4'-4"	1.42	55
30"	4.91	5'-9"	2'-10 1/2"	4'-10"	1.88	64

WITHOUT BAFFLES

GENERAL NOTES

1. Baffles to be constructed only when called for in plans.
2. When steel grating is required on endwall see Sheet 3 of 3 for details.
3. All reinforcing No. 4 bars with 2" clearance except as noted.
4. All angles, channels and bars to be ASTM A 588 weathering steel, except grates exposed to salt water shall be ASTM A 572 Grade 50 steel and galvanized in accordance with Section 962-7 of the Standard Specifications, and shall be designated in the plans as Alternate G.
5. Channel section C 3 x 6 may be substituted for the C 4 x 5.4 channel.
6. Concrete meeting the requirements of ASTM C-478 (4000 psi) may be used in lieu of Class I concrete in precast units manufactured in plants which are under the Standard Operating Procedures for the inspection of precast drainage products.
7. Sodding shall be in accordance with Index No. 281, and paid for under the contract unit price for Sodding SY.
8. Endwall to be paid for under the contract unit price for Class I Concrete (Endwalls), CY and Reinforcing Steel (Roadway) LB. Cost of grates to be paid for under the contract unit price for Endwall Grate LB, plan quantity. Cost of galvanized bolts and nuts to be included in the bid price for the grate.

ENDWALLS FOR 2:1 SLOPES

STATE OF FLORIDA DEPARTMENT OF TRANSPORTATION
ROAD DESIGN

U-TYPE CONCRETE ENDWALLS BAFFLES AND GRATE OPTIONAL 15" TO 30" PIPE

	Names	Dates
Designed by:		
Drawn by:	GDS	9/85
Checked by:		
File # 2 Approved		3/20/75

Approved By: State Design Engineer, Roadways

Revision No.	Sheet No.	Index No.
86	1 of 3	261

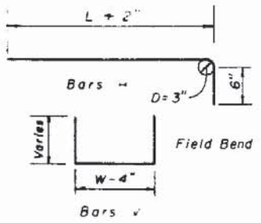

BENDING DIAGRAM

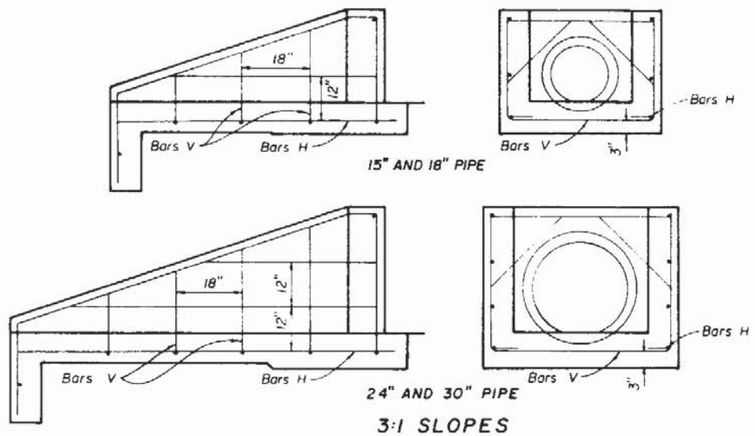

3:1 SLOPES

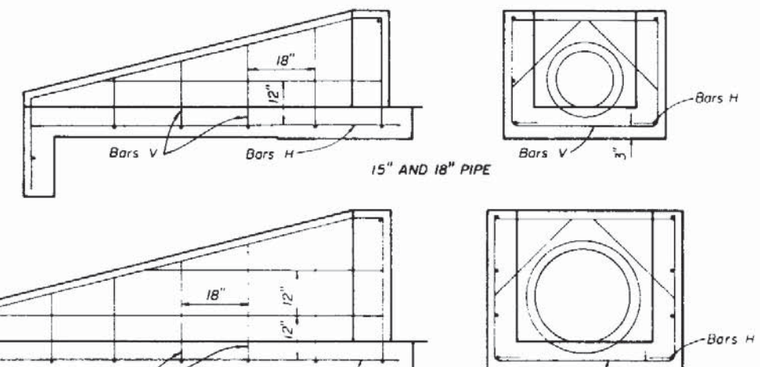

4:1 SLOPES

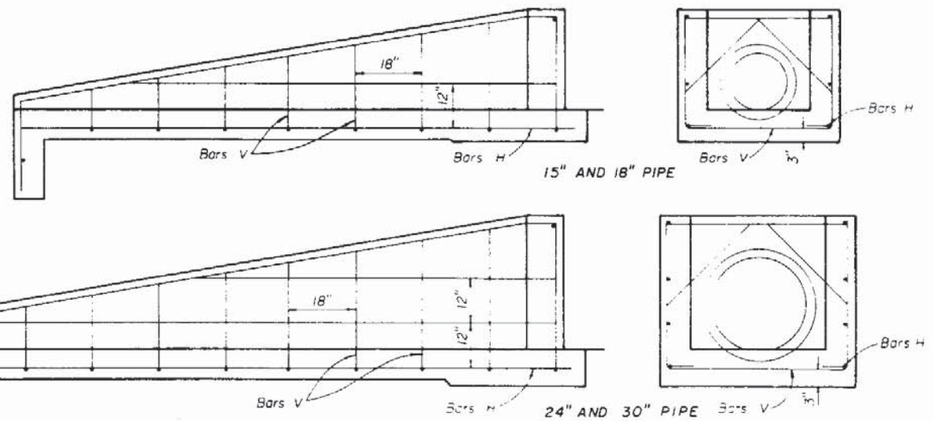

6:1 SLOPES

SIDE VIEWS AND BACKWALL SECTIONS
REINFORCING DETAILS

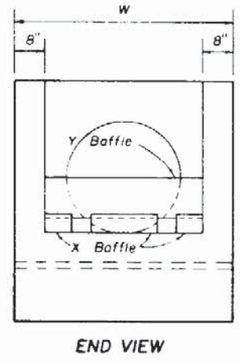

END VIEW

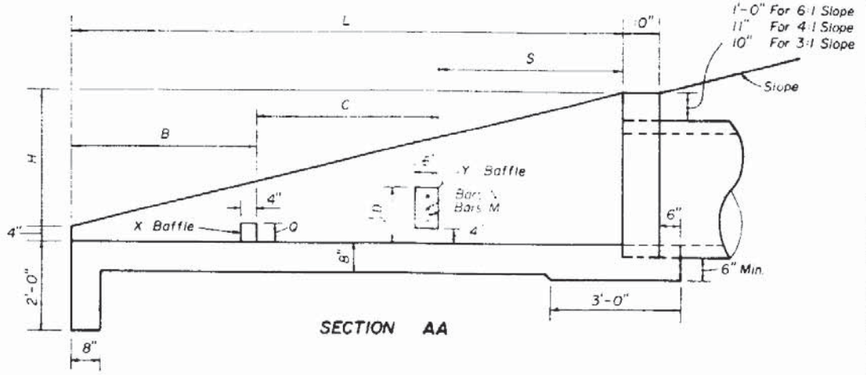

SECTION AA

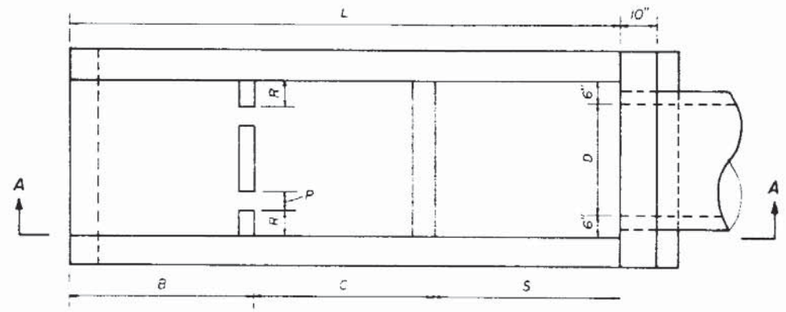

PLAN

DIMENSIONAL DETAILS

DIMENSIONS AND QUANTITIES FOR ONE U - ENDWALL

Rate Of Slope	Pipe Size D	Pipe Size Area Sq Ft	L	H	W	Baffle Locations (When Required) S	Baffle Locations (When Required) B	Baffle Locations (When Required) C	Concrete Class I Cu Yd	Reinf Steel Lbs
3:1	15"	1.23	5'-3"	1'-9"	3'-7"	1'-9"	1'-9"	1'-9"	1.19	51
	18"	1.77	6'-0"	2'-0"	3'-10"	2'-0"	2'-0"	2'-0"	1.42	56
	24"	3.14	7'-6"	2'-6"	4'-4"	2'-6"	2'-6"	2'-6"	1.94	77
	30"	4.91	9'-0"	3'-0"	4'-10"	3'-0"	3'-0"	3'-0"	2.54	96
4:1	15"	1.23	7'-4"	1'-0"	3'-7"	2'-6"	2'-6"	2'-4"	1.54	64
	18"	1.77	8'-4"	2'-0"	3'-10"	2'-10"	2'-10"	2'-8"	1.84	71
	24"	3.14	10'-4"	2'-7"	4'-4"	3'-6"	3'-6"	3'-4"	2.53	92
	30"	4.91	12'-4"	3'-1"	4'-10"	4'-2"	4'-2"	4'-0"	3.34	124
6:1	15"	1.23	16'-6"	1'-11"	3'-7"	3'-10"	3'-10"	3'-8"	2.19	89
	18"	1.77	18'-0"	2'-2"	3'-10"	4'-4"	4'-4"	4'-4"	2.63	103
	24"	3.14	20'-0"	2'-8"	4'-4"	5'-4"	5'-4"	5'-4"	3.59	143
	30"	4.91	23'-0"	3'-2"	4'-10"	6'-4"	6'-4"	6'-4"	4.81	180

DIMENSIONS AND QUANTITIES FOR BAFFLES

Pipe Size D	X Baffle P Width	X Baffle Q Height	X Baffle R Length	Y Baffle Reinf Steel Bar M	Y Baffle Reinf Steel Bar N	Concrete Class I Cu Yd	Reinf Steel Lbs
15"	4"	4"	4"	2-#4	1-#4	0.10	4
18"	4"	4"	5"	3-#4	2-#4		8
24"	5"	5"	6"	4-#4	3-#4		12
30"	5"	5"	7"	4-#4	4-#4		16

ENDWALLS WITH AND WITHOUT BAFFLES FOR 3:1, 4:1 AND 6:1 SLOPES

STATE OF FLORIDA DEPARTMENT OF TRANSPORTATION
ROAD DESIGN

U-TYPE CONCRETE ENDWALLS
BAFFLES AND GRATE OPTIONAL
15" TO 30" PIPE

	Names	Dates
Designed by		
Drawn by	tds	9/85
Checked by		
No. & Approved		

Approved By
State Design Engineer, Roadways

Revision No	Sheet No	Index No
86	2 of 3	261

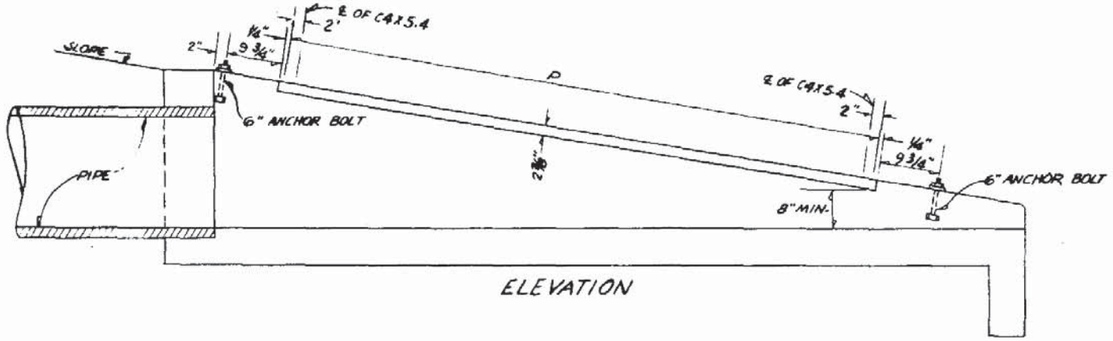

ELEVATION

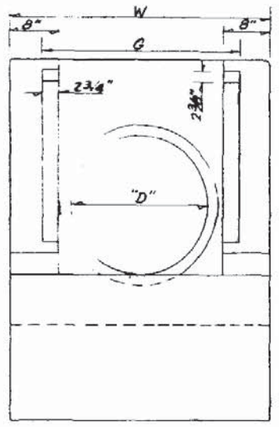

END VIEW

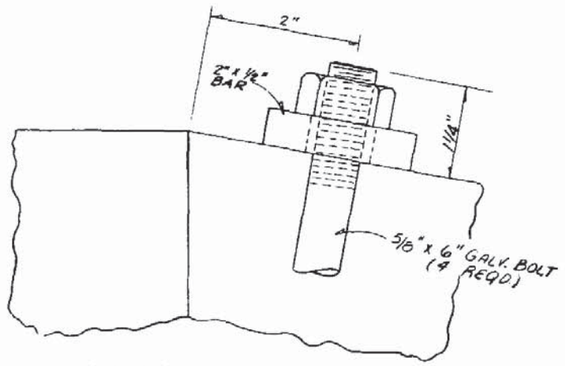

ANCHOR BOLT DETAIL

MOUNTING FOR STEEL GRATE

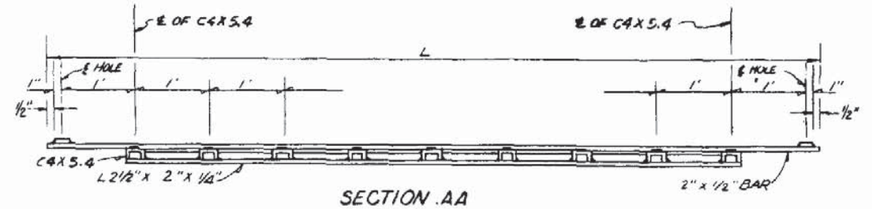

SECTION AA

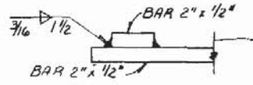

BAR TO BAR WELD

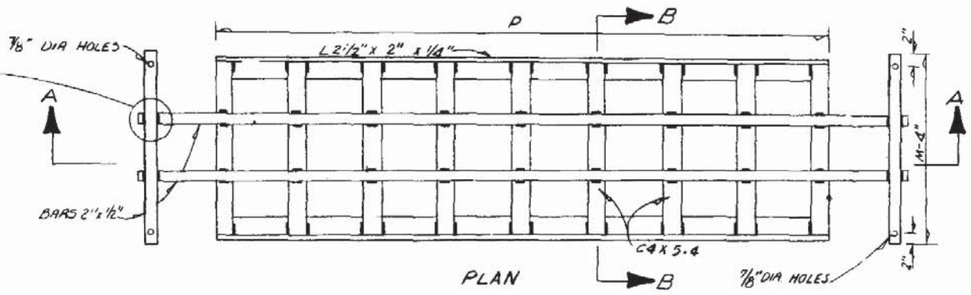

PLAN

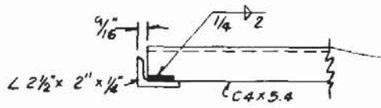

CHANNEL TO ANGLE WELD

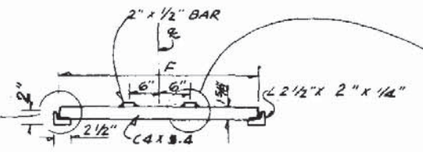

SECTION BB

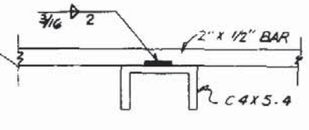

BAR TO CHANNEL WELD

STEEL GRATE

STEEL GRATING USE CRITERIA

1. GRATED HEADWALL AND/OR ENDWALL TO BE USED ON PIPE CULVERTS WHEN IN THE DESIGNATED CLEAR RECOVERY AREA AND WHEN ANY OF THE FOLLOWING CONDITIONS EXIST:
   - A. DRAINAGE AREA TO CULVERT CONSISTS OF MEDIAN OR INFIELD AREAS OR AREAS WHERE DEBRIS AND/OR DRIFT IS NEGLIGIBLE.
   - B. RUNOFF TO CULVERT IS BY SHEET FLOW OR IN SUCH ILL DEFINED CHANNELS THAT DEBRIS TRANSPORT IS NOT CONSIDERED A MAJOR PROBLEM.
   - C. RUNOFF TO CULVERT IS MINOR EXCEPT ON AN INFREQUENT BASIS (10 TO 25 YEAR FREQUENCY); FOR EXAMPLE A DRAINAGE BASIN IN FLAT SANDY TERRAIN WITH NORMALLY LOW GROUND WATER TABLE.
   - D. AREA WHERE CULVERT BLOCKAGE WITH RESULTANT BACKWATER WOULD NOT SERIOUSLY AFFECT ROADWAY EMBANKMENT, TRAFFIC OPERATION OR UPLAND PROPERTY.
2. STEEL GRATINGS TO BE USED ONLY WHERE CALLED FOR IN PLANS AND ONLY ON HEADWALLS AND/OR ENDWALLS HAVING EITHER 4:1 OR 6:1 RATES OF SLOPE.

TABLE OF DIMENSIONS AND QUANTITIES FOR ONE GRATE

GATE OF SLOPE	SIZE PIPE "D"	G	2 EACH BARS @ 3.4 LBS/L.F.			(X) CHANNELS @ 5.4 LBS/L.F.			2 ANGLES @ 3.62 LBS/L.F.		TOTAL WEIGHT LBS.
			L	W-4"	LBS.	(X)	F	LBS.	P	LBS.	
6:1	15"	2'-8 1/2"	9'-3"	3'-3"	85	8	2'-6 3/4"	111	7'-4"	53	249
	18"	2'-11 1/2"	10'-3"	3'-6"	94	9	2'-9 1/4"	137	8'-4"	62	292
	24"	3'-5 1/2"	13'-3"	4'-0"	117	12	3'-3 1/4"	215	11'-4"	82	414
	30"	3'-11 1/2"	16'-3"	4'-6"	141	15	3'-9 1/4"	310	14'-4"	104	555
4:1	15"	2'-8 1/2"	6'-3"	3'-3"	45	5	2'-6 3/4"	70	4'-4"	32	147
	18"	2'-11 1/2"	7'-3"	3'-6"	73	6	2'-9 1/4"	92	5'-4"	39	204
	24"	3'-5 1/2"	9'-3"	4'-0"	90	8	3'-3 1/4"	144	7'-4"	53	287
	30"	3'-11 1/2"	11'-3"	4'-6"	107	10	3'-9 1/4"	206	9'-4"	68	381
3:1	15"	2'-8 1/2"	4'-3"	3'-3"	51	5	2'-6 3/4"	42	2'-4"	17	110
	18"	2'-11 1/2"	5'-3"	3'-6"	60	4	2'-9 1/4"	61	3'-4"	24	145
	24"	3'-5 1/2"	6'-3"	4'-0"	70	5	3'-3 1/4"	90	4'-4"	31	191
	30"	3'-11 1/2"	8'-3"	4'-6"	87	7	3'-9 1/4"	145	6'-4"	46	278

STATE OF FLORIDA DEPARTMENT OF TRANSPORTATION
ROAD DESIGN

U-TYPE CONCRETE ENDWALLS BAFFLES AND GRATE OPTIONAL 15" TO 30" PIPE

	Names	Dates
Designed by		
Drawn by	CDP	7/71
Checked by		

FHWA Approved: 3/20/75

Approved By
Deputy Design Engineer, Roadways

Revision No.	Sheet No.	Index No.
86	3 of 3	261

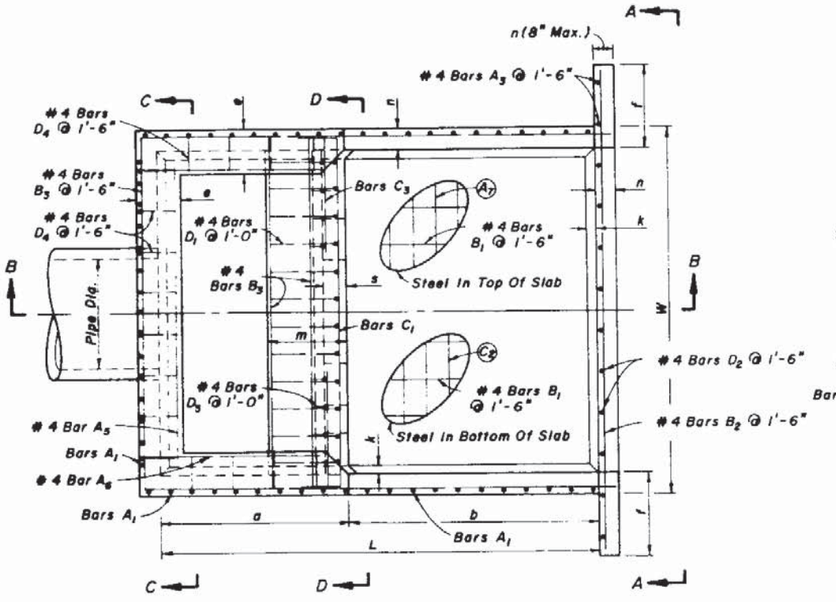

PLAN

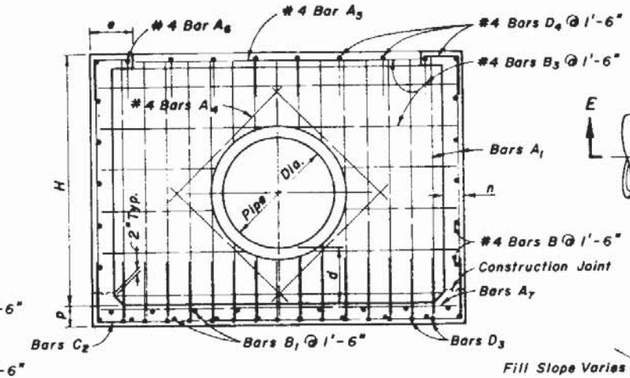

SECTION CC

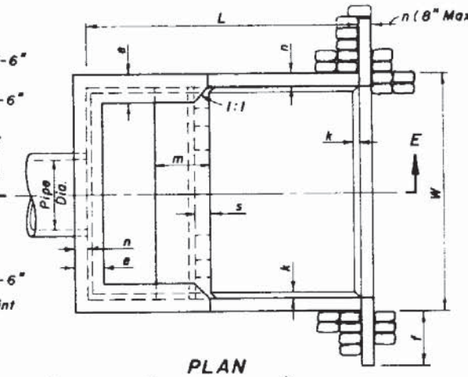

PLAN

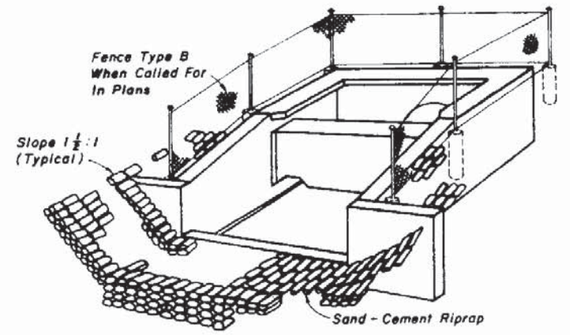

PERSPECTIVE

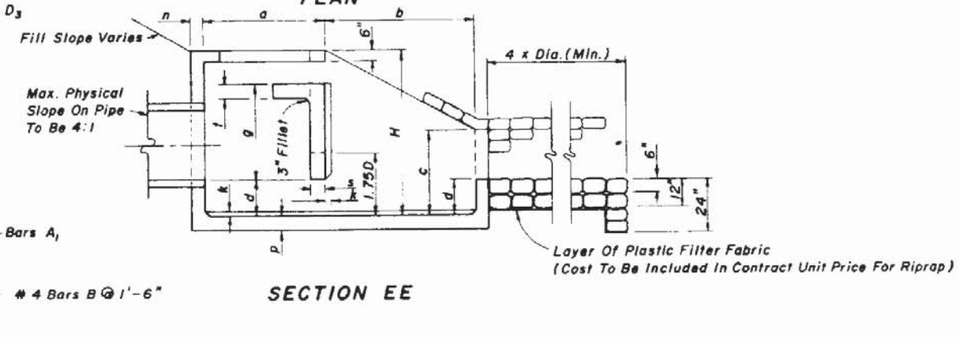

SECTION EE

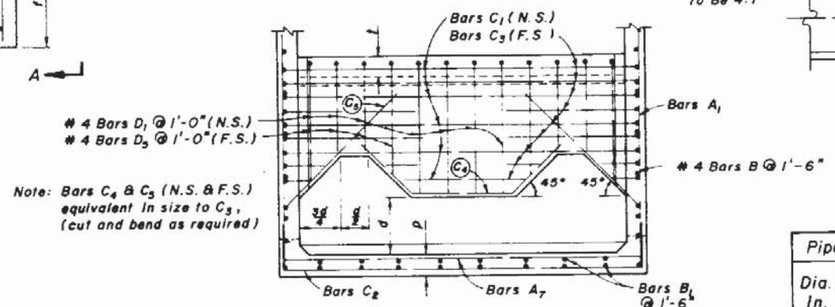

SECTION DD

Note: Bars C_4 & C_5 (N.S. & F.S.) equivalent in size to C_3, (cut and bend as required)

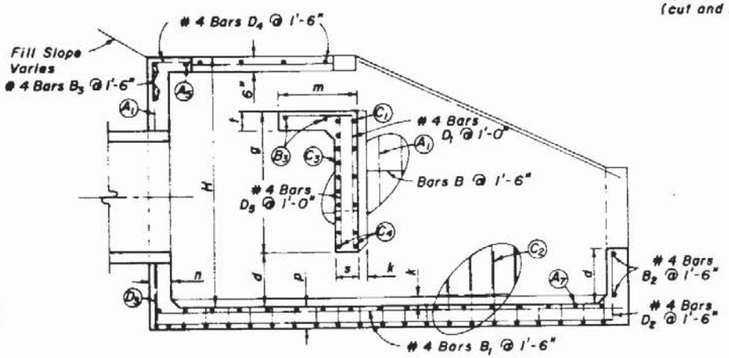

SECTION BB

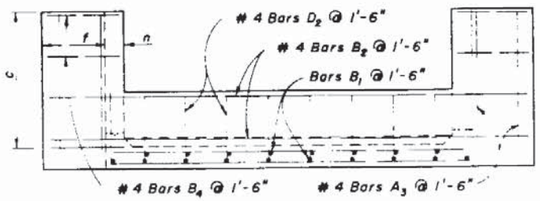

VIEW AA

Pipe Size		Q(Max.)	Dimensions															Concrete Class I C.Y.	Reinf. Steel Lbs.	Sand Cement Riprap C.Y.(Nom.)
			Ft.-In.										Inches							
Dia. In.	Area S.F.	(csf)	W	H	L	a	b	c	d	e	f	g	m	n	p	s	t	k			
30	4.91	59	9-0	6-3	10-8	4-7	6-1	3-4	1-4	1-2	2-6	3-0	1-11	6	6-½	7	7	3	6.72	736	10.6
36	7.07	85	10-5	7-3	12-4	5-3	7-1	3-10	1-7	1-3	3-0	3-6	2-3	7	7-½	8	8	3	10.34	1,072	13.6
42	9.62	115	11-10	8-0	14-0	6-0	8-0	4-5	1-9	1-6	3-0	3-11	2-6	8	8-½	9	8	4	14.82	1,429	17.5
48	12.57	151	13-3	9-0	15-8	6-9	8-11	4-11	2-0	1-7	3-0	4-5	2-10	9	9-½	10	8	4	20.36	2,000	22.1
54	15.90	191	14-8	9-9	17-4	7-4	10-0	5-5	2-2	1-10	3-0	4-11	3-0	10	10-½	10	8	4	27.19	2,659	27.2
60	13.63	236	16-1	10-9	19-0	8-0	11-0	5-11	2-5	1-11	3-0	5-4	3-4	11	11-½	11	8	6	34.49	3,552	32.5
66	23.76	285	17-3	11-6	20-6	8-8	11-10	6-5	2-7	2-1	3-0	5-9	3-7	12	12-½	12	8	6	42.82	4,472	38.3
72	28.27	339	18-6	12-3	22-0	9-3	12-9	6-11	2-9	2-3	3-0	6-2	3-9	12	12-½	12	8	6	50.68	5,426	44.5

GENERAL NOTES

1. Chamfer all exposed edges ¾".
2. Concrete meeting the requirements of ASTM C-478 (4000 psi) may be used in lieu of Class I concrete in precast items manufactured in plants which are under the Standard Operating Procedures for the inspection of precast drainage products.
3. Endwall to be paid for under the contract unit price for Class I Concrete (Endwalls) CY and Reinforcing Steel (Roadway) LB. Riprap to be paid for under the contract unit price for Riprap (Sand - Cement) (Roadway) CY. Cost of plastic filter fabric to be included in the contract unit price for riprap.
4. Fencing, when called for in the plans, to be paid for under the contract unit price for Fencing, Type B L.F. Corner posts and pull and end posts to be paid for under the contract unit price for Corner Post Assembly (Type B Fence) EA. and Pull & End Post Assembly (Type B Fence) EA. respectively. See Index No. 452 for details of Type B fencing.

BARS

Pipe Size	A_1 Size (No.)	A_1 Spacing (Ft.-In.)	A_7 Size (No.)	A_7 Spacing (Ft.-In.)	C_1 Size (No.)	C_1 Spacing (Ft.-In.)	C_2 Size (No.)	C_2 Spacing (Ft.-In.)	C_3 Size (No.)	C_3 Spacing (Ft.-In.)	D_3 Size (No.)	D_3 Spacing (Ft.-In.)
30"	4	0-9½	4	1-6	5	0-11	4	0-9½	5	0-5½	4	0-9½
36"	5	1-0	4	1-6	5	0-10	5	1-0	5	0-5	5	1-0
42"	5	0-11	4	1-6	6	1-1	5	0-11	6	0-6½	5	0-11
48"	5	0-9½	4	1-0	6	1-0	5	0-9½	6	0-6	5	0-9½
54"	5	0-8½	4	0-10	7	1-1	5	0-8½	7	0-6½	5	0-8½
60"	6	0-10	5	1-1	7	1-0	6	0-10	7	0-6	6	0-10
66"	6	0-8½	5	0-11½	7	0-11	6	0-8½	7	0-5½	6	0-8½
72"	6	0-7½	5	0-10	7	0-10	6	0-7½	7	0-5	6	0-7½

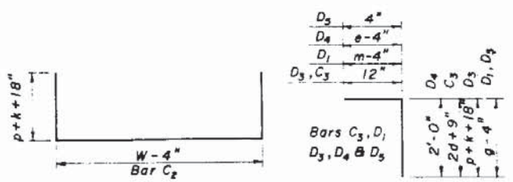

Note. All bar dimensions are out to out.

BENDING DIAGRAM

STATE OF FLORIDA DEPARTMENT OF TRANSPORTATION
ROAD DESIGN

U-TYPE CONCRETE ENDWALL ENERGY DISSIPATOR
30" To 72" PIPE

	Names	Dates
Designed By	HAB	10/69
Drawn By	RWR	2/84
Checked By	JVG	2/84
F. H. W. A. Approved	3/20/75	

Approved By
State Design Engineer, Roadways

Revision No.	Sheet No.	Index No.
85	1 of 1	264

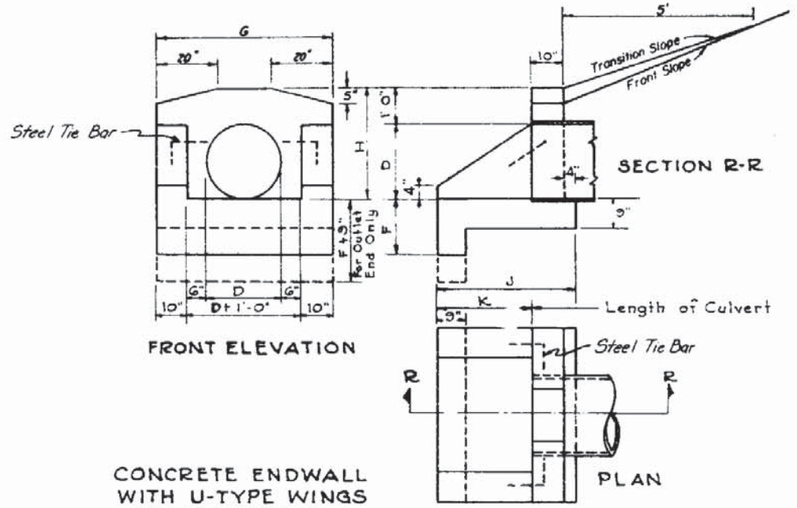

CONCRETE ENDWALL
WITH U-TYPE WINGS
FOR PIPE CULVERTS

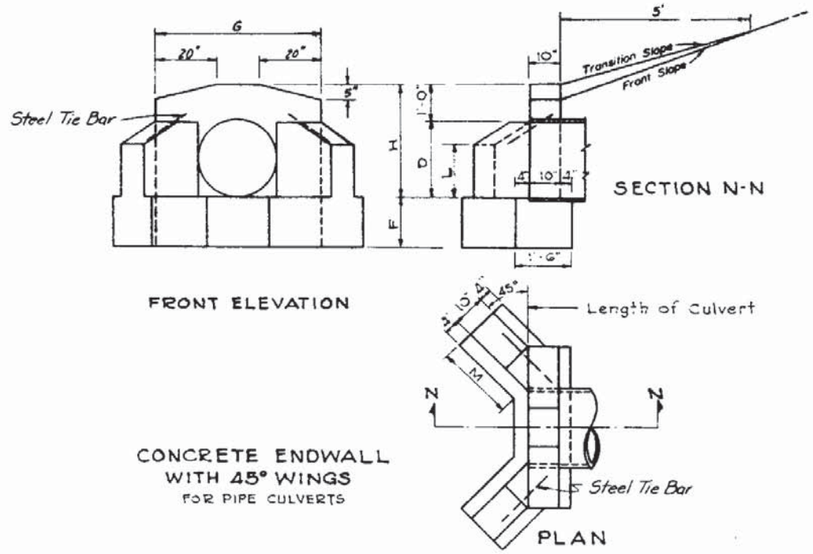

CONCRETE ENDWALL
WITH 45° WINGS
FOR PIPE CULVERTS

TABLE OF DIMENSIONS AND ESTIMATED QUANTITIES
PIPE CULVERT ENDWALLS WITH U-TYPE WINGS

DIMENSIONS							QUANTITIES IN ONE ENDWALL						
Opening		Wall			Footing		Total Cu Yds Concrete, Class I						Steel Tie Bars
							Conc Pipe		C M Pipe		C I Pipe		
D	Area Sq Ft	G	H	K	F	J	Inlet	Outlet	Inlet	Outlet	Inlet	Outlet	
12"	0.8	3'-8"	2'-0"	1'-0"	1'-3"	2'-2"	0.48	0.55	0.49	0.57	0.49	0.57	none
15"	1.2	3'-11"	2'-3"	1'-5"	1'-3"	2'-7"	0.59	0.67	0.62	0.70	0.61	0.70	none
18"	1.8	4'-2"	2'-6"	1'-8"	1'-3"	2'-11"	0.70	0.79	0.74	0.82	0.74	0.82	none
24"	3.1	4'-8"	3'-0"	2'-6"	1'-6"	3'-8"	1.01	1.11	1.06	1.16	1.06	1.16	2-3/4"ϕx2'-0"
30"	4.9	5'-2"	3'-6"	3'-3"	1'-6"	4'-5"	1.33	1.44	1.41	1.51	1.40	1.51	2-3/4"ϕx2'-0"
36"	7.1	5'-8"	4'-0"	4'-0"	1'-9"	5'-2"	1.73	1.85	1.84	1.96	1.82	1.94	2-3/4"ϕx2'-6"
42"	9.6	6'-2"	4'-6"	4'-9"	2'-0"	5'-11"	2.19	2.32	2.32	2.45			2-3/4"ϕx2'-6"
48"	12.6	6'-8"	5'-0"	5'-6"	2'-0"	6'-8"	2.64	2.78	2.81	2.95			2-3/4"ϕx3'-0"

TABLE OF DIMENSIONS AND ESTIMATED QUANTITIES
PIPE CULVERT ENDWALLS WITH 45° WINGS

DIMENSIONS							QUANTITIES IN ONE ENDWALL			
Opening		Wall				Footing	Concrete, Class I			
							Total Cu Yds			Steel Tie Bars
D	Area Sq Ft	H	G	L	M	F	Conc Pipe	C M Pipe	C I Pipe	
18"	1.8	2'-6"	3'-10"	1'-2"	1'-7"	1'-3"	0.74	0.77	0.77	none
24"	3.1	3'-0"	4'-4"	1'-5"	2'-1"	1'-4"	1.01	1.06	1.06	2-3/4"ϕx2'-0"
30"	4.9	3'-6"	4'-10"	1'-9"	2'-5"	1'-6"	1.32	1.40	1.39	2-3/4"ϕx2'-0"
36"	7.1	4'-0"	5'-4"	2'-0"	2'-11"	1'-8"	1.72	1.83	1.82	2-3/4"ϕx3'-0"
42"	9.6	4'-6"	5'-10"	2'-3"	3'-6"	2'-0"	2.34	2.47		2-3/4"ϕx3'-0"
48"	12.6	5'-0"	6'-4"	2'-6"	4'-0"	2'-0"	2.74	2.90		2-3/4"ϕx3'-0"
15"	1.2	2'-3"	3'-7"	1'-0"	1'-8"	1'-3"	0.56	0.59	0.59	none

GENERAL NOTES

1. Chamfer all exposed edges $\frac{3}{4}$".
2. Concrete meeting the requirements of ASTM C-478 (4000 psi) may be used in lieu of Class I concrete in precast units manufactured in plants which are under the Standard Operating Procedures for the inspection of precast drainage products.
3. Endwall to be paid for under the contract unit price for Class I Concrete (Endwalls) CY. Cost of steel tie bars to be included in the contract unit price for Class I Concrete.
4. Sodding to be in accordance with Index No. 281, and paid for under the contract unit price for Sodding SY.

STATE OF FLORIDA DEPARTMENT OF TRANSPORTATION
ROAD DESIGN

WINGED CONCRETE ENDWALLS SINGLE ROUND PIPE

	Names	Dates
Designed by		
Drawn by	TJK	12/31
Checked by	GEF	3/32
F.H.W.A. Approved		3/20/75

Approved By
Deputy Design Engineer, Roadways

Revision No.	Sheet No.	Index No.
86	1 of 1	266

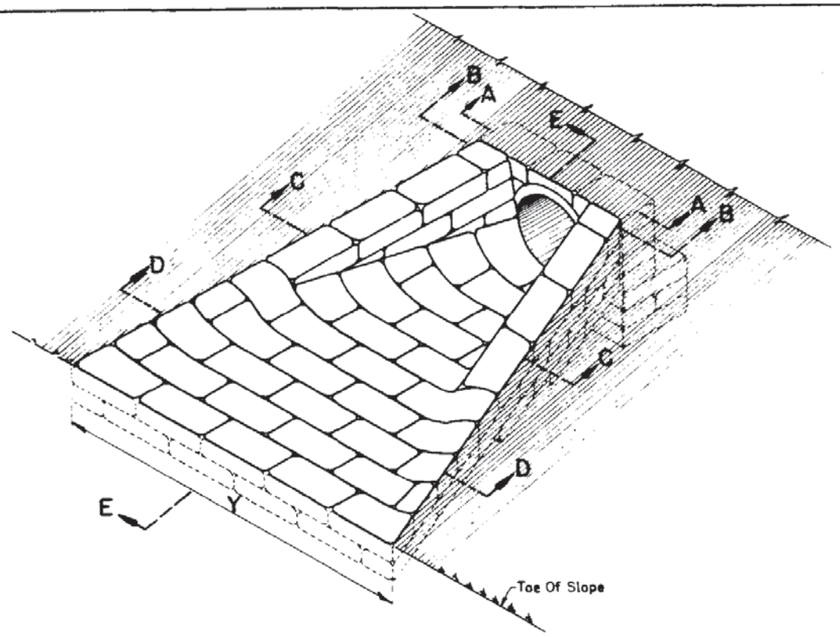

ISOMETRIC

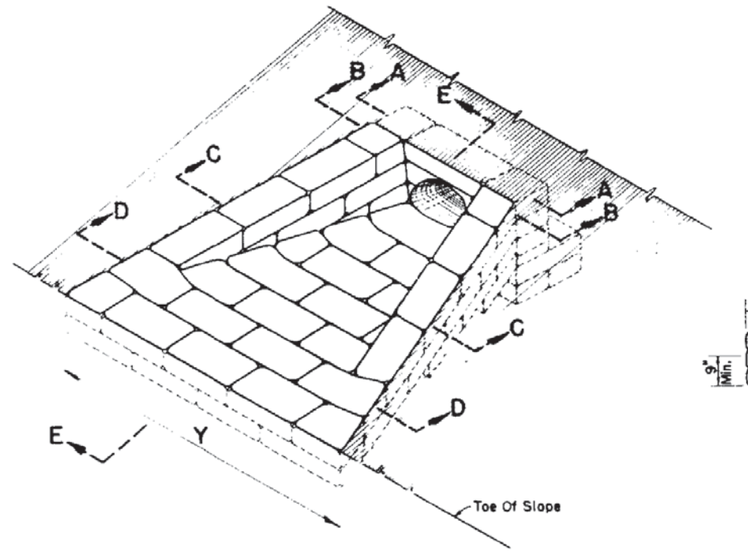

ISOMETRIC

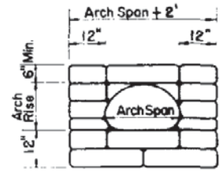

SECTION A A

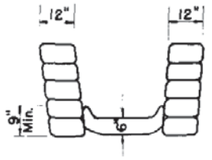

SECTION B B

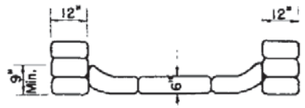

SECTION C C

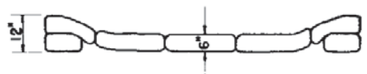

SECTION D D

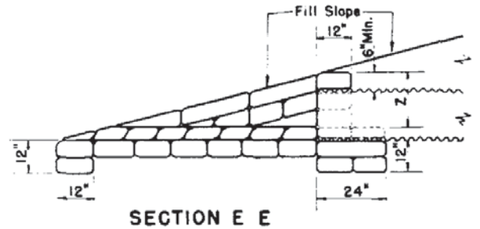

SECTION E E

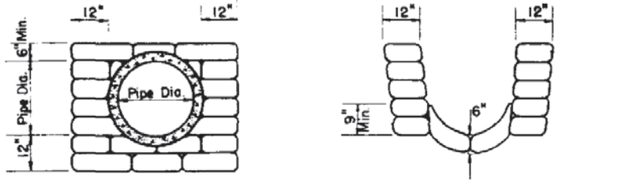

SECTION A A

SECTION B B

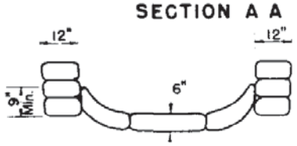

SECTION C C

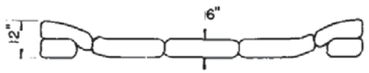

SECTION D D

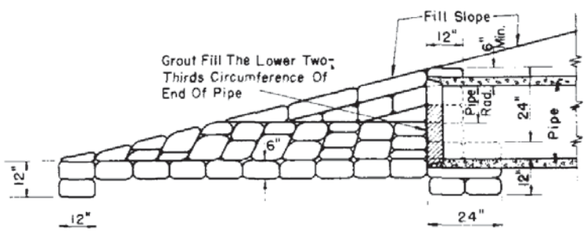

SECTION E E

DETAIL FOR SINGLE PIPE CULVERT

NOTE: For Multiple Pipe Culvert spacing between pipe centers = X

DETAILS FOR SINGLE METAL PIPE ARCH CULVERTS

NOTE: For Multiple Metal Pipe Arch Culvert spacing between Arch centers = X

DIMENSIONS and QUANTITIES for METAL PIPE ARCH CULVERTS

Span	Rise	Dimensions						Quantity of Sand-Cement Riprap in Cu. Yds. for One Endwall											
		X	Y				Z	For 2:1 Slopes				For 4:1 Slopes				For 6:1 Slopes			
			1-Arch	2-Arch	3-Arch	4-Arch		1-Arch	2-Arch	3-Arch	4-Arch	1-Arch	2-Arch	3-Arch	4-Arch	1-Arch	2-Arch	3-Arch	4-Arch
17"	13"	2'-6"	6'-6"	9'-0"	11'-6"	14'-0"	1'-7"	1.0	1.5	2.0	2.5	1.5	2.2	2.9	3.6				
21"	15"	2'-10"	7'-6"	10'-4"	13'-2"	16'-0"	1'-9"	1.2	1.8	2.4	3.0	1.9	2.7	3.5	4.3				
28"	20"	3'-5"	9'-3"	12'-8"	16'-1"	19'-6"	2'-0"	1.7	2.5	3.3	4.1	2.6	3.7	4.8	5.9				
35"	24"	4'-0"	11'-0"	15'-0"	19'-0"	23'-0"	2'-0"	2.2	3.1	4.0	4.9	3.4	4.7	6.0	7.3				
42"	29"	4'-9"	12'-9"	17'-6"	22'-3"	27'-0"	2'-0"	2.9	4.1	5.3	6.5	4.5	6.1	7.7	9.3				
49"	33"	5'-6"	14'-6"	20'-0"	25'-6"	31'-0"	2'-0"	3.5	4.9	6.3	7.7	5.5	7.4	9.3	11.2				
57"	38"	6'-4"	16'-6"	22'-10"	29'-2"	35'-6"	2'-0"	4.4	6.1	7.8	9.5	6.9	9.2	11.5	13.8				
64"	43"	7'-1"	18'-3"	25'-4"	32'-5"	39'-6"	2'-0"	5.1	7.0	8.9	10.8	8.1	10.7	13.3	15.9				
71"	47"	7'-10"	20'-0"	27'-10"	35'-8"	43'-6"	2'-0"	5.9	8.1	10.3	12.5	9.5	12.4	15.3	18.2				

DIMENSIONS and QUANTITIES for ROUND PIPE CULVERTS

Pipe Diam	Dimensions					Quantity of Sand-Cement Riprap in Cu.Yds. for One Endwall												
	X	Y				For 2:1 Slopes				For 4:1 Slopes				For 6:1 Slopes				
		1-Pipe	2-Pipes	3-Pipes	4-Pipes	1-Pipe	2-Pipes	3-Pipes	4-Pipes	1-Pipe	2-Pipes	3-Pipes	4-Pipes	1-Pipe	2-Pipes	3-Pipes	4-Pipes	
15"	2'-7"	7'-0"	9'-7"	12'-2"	14'-9"	1.2	1.6	2.1	2.6	1.7	2.4	3.0	3.6					
18"	2'-10"	8'-0"	10'-10"	13'-8"	16'-6"	1.4	2.0	2.6	3.1	2.1	2.9	3.7	4.4					
24"	3'-5"	10'-0"	13'-5"	16'-10"	20'-3"	1.9	2.7	3.5	4.3	2.9	4.0	5.1	6.3					
30"	4'-3"	12'-0"	16'-3"	20'-6"	24'-9"	2.5	3.6	4.8	5.9	3.8	5.4	7.0	8.6					
36"	5'-1"	14'-0"	19'-1"	24'-2"	29'-3"	3.1	4.6	6.2	7.7	4.8	7.0	9.2	11.4					
42"	6'-0"	16'-0"	22'-0"	28'-0"	34'-0"	3.8	5.8	7.7	9.7	6.0	8.8	11.7	14.5					
48"	6'-9"	18'-0"	24'-9"	31'-6"	38'-3"	4.5	7.0	9.4	11.8	7.2	10.8	14.3	17.9					
54"	7'-8"	20'-0"	27'-8"	35'-4"	43'-0"	5.3	8.3	11.3	14.2	8.5	12.9	17.3	21.7					
60"	8'-6"	22'-0"	30'-6"	39'-0"	47'-6"	6.2	9.7	13.3	16.9	10.0	15.3	20.6	25.9					

STATE OF FLORIDA DEPARTMENT OF TRANSPORTATION
ROAD DESIGN

U-TYPE SAND-CEMENT ENDWALLS

	Name	Date
Designed By	JEP	12/48
Drawn By	HW	3/54
Checked By	CDD	3/54
Revised - A & Approved		8/30/77

Approved By: Deputy State Highway Engineer

Revision No.	Sheet No.	Index No.
81	1 of 1	268

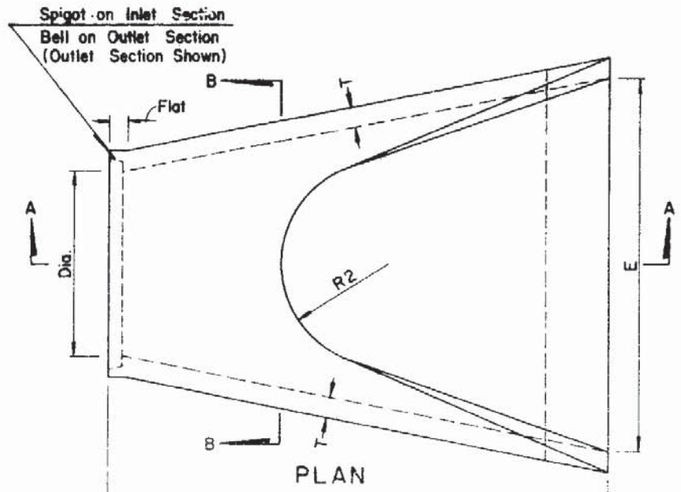

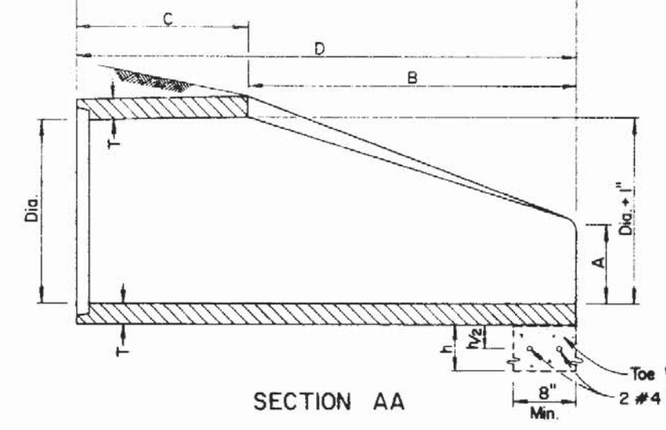

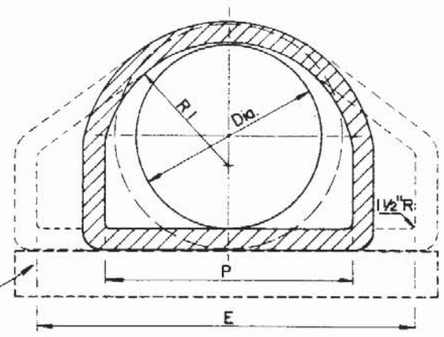

FLARED END SECTION

DIA.	T	REINF. Sq. In./Lin. Ft.	BELL or SPIGOT	A	B	C	D	E	P	R1	R2	FLAT	WEIGHT (LBS.)	TOE WALL h	TOE WALL CLASS I CONC (Misc.) CY
12"	2"	0.07	1½"	4"	2'-0"	4'-0 7/8"	6'-0 3/8"	2'-0"	19 15/16"	10 1/8"	9"	3 ½"	530	12"	.06
15"	2 1/8"	0.07	2"	6"	2'-3"	3'-10"	6'-1"	2'-6"	24 5/16"	12 ½"	11"	3 ½"	740	12"	.07
18"	2 ½"	0.07	2 ½"	9"	2'-3"	3'-10"	6'-1"	3'-0"	29"	15 ½"	12"	4"	990	15"	.11
21"	2 3/4"	0.07	2 1/8"	9"	2'-11"	3'-2"	6'-1"	3'-6"	31 5/8"	16 ½"	13"	4"	1280	15"	.12
24"	3"	0.07	2 ½"	9 ½"	3'-7 ½"	2'-6"	6'-1 ½"	4'-0"	33 3/16"	16 15/16"	14"	4 ½"	1520	18"	.17
27"	3 1/8"	0.148	2 ½"	10 ½"	4'-0"	2'-1 ½"	6'-1 ½"	4'-6"	36"	18 9/16"	14 ½"	4 ½"	1930	18"	.19
30"	3 ½"	0.148	3"	1'-0"	4'-6"	1'-7 3/4"	6'-1 3/4"	5'-0"	37"	18 ½"	15"	5"	2190	21"	.24
36"	4"	0.148	3 ½"	1'-3"	5'-3"	2'-10 3/4"	8'-1 3/4"	6'-0"	47 5/16"	24 5/16"	20"	5 ½"	4100	21"	.29
42"	4 ½"	0.148	3 3/4"	1'-9"	5'-3"	2'-11"	8'-2"	6'-6"	53 7/8"	27 ½"	22"	5 ½"	5380	24"	.36
48"	5"	0.148	4 1/4"	2'-0"	6'-0"	2'-2"	8'-2"	7'-0"	56 ½"	28 ½"	22"	5 3/4"	6550	24"	.39
54"	5 ½"	0.174	4 3/4"	2'-3"	5'-5"	2'-11"	8'-4"	7'-6"	65 ½"	33 1/8"	24"	6 1/4"	8040	24"	.42
60"	6"	0.174	5"	2'-6"	5'-0"	3'-3"	8'-3"	8'-0"	72 ½"	36 1/16"	24"	6 3/4"	8750	24"	.44
66"	6 ½"	0.174	5 ½"	2'-0"	6'-6"	1'-9"	8'-3"	8'-6"	72"	36 1/8"	24"	7 1/4"	10630	24"	.47
72"	7"	0.174	6"	2'-0"	6'-6"	1'-9"	8'-3"	9'-0"	77 13/16"	38 15/16"	24"	7 3/4"	12520	24"	.50

GENERAL NOTES

1. Flared end sections shall conform to the requirements of ASTM C-76 with the exception that dimensions and reinforcement shall be as prescribed in the table above. Circumferential reinforcement may consist of either one cage or two cages of steel. Compressive strength of concrete shall be 4000 psi. Shop drawings for flared end sections having dimensions other than above must be submitted for approval to the Engineer of Drainage.

2. Connections between the flared end section and the pipe culvert may be any of the following types unless otherwise shown on the plans.

   a. Joints meeting the requirements of Section 941-1.5 of the Standard Specifications.

      The manufacturer of the flared end section shall identify the manufacturer of the pipe culvert and certify that the flared end section is suited to joining the pipe culvert.

   b. Joints sealed with preformed plastic gaskets.

      The gaskets shall meet the requirements of Section 942-2 of the Standard Specifications and the minimum sizes for gaskets shall be as that specified for equivalent sizes of elliptical pipe.

   c. Reinforced concrete jackets, as detailed on this drawing.

      Cost of the reinforced concrete jacket to be included in the contract unit price for the flared end section.

      When non-coated corrugated metal pipe is called for in the plans, the pipe shall be bituminous coated in the jacketed area as specified on Index No. 280. Bituminous coating to be included in the contract unit price for the pipe culvert.

3. Toe walls shall be constructed when shown on the plans or at locations designated by the Engineer. Toe walls are to be cast in-place with Class I Concrete and paid for under the contract unit price for Class I Concrete (Miscellaneous). Reinforcing steel to be included in cost of toe wall.

4. On skewed pipe culverts the flared end sections shall be placed in line with the pipe culvert. Side slopes shall be warped as required to fit the flared end sections.

5. Flared End Section to be paid for per each. Sodding shall be in accordance with Index No. 281, and paid for under the contract unit price for Sodding SY.

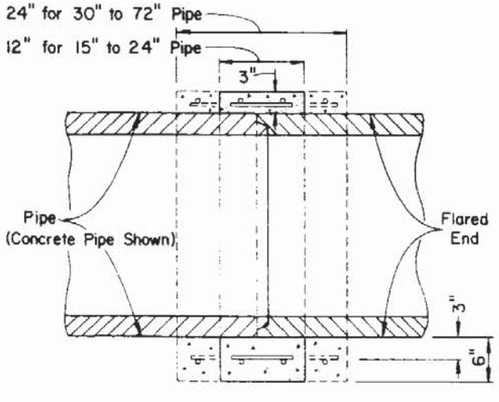

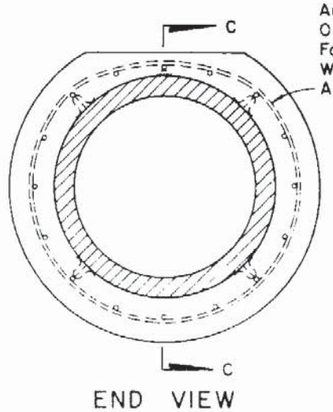

Any Wire Mesh Arrangement Which Provides 0.126 Square Inches Of Steel Area Per Linear Foot Both Ways May Be Used Provided The Wires Are Spaced A Minimum Of 2" And / Or A Maximum Of 6" On Centers.

REINFORCED CONCRETE JACKET DETAIL

DESIGN NOTES

1. Flared end sections are intended for use outside the clear zone on median drain and cross drain installation, except that flared end sections for pipe sizes 12" and 15" are permitted within the clear zone. When the slope intersection permits, these flared end sections may be located with the culvert opening as close as 8' beyond the outside edge of the shoulder.

   Flared end sections are not intended for side drain installations.

2. Reinforced concrete jackets shall be used at all locations where high velocities and/or highly erosive soils may cause disjointing. These locations are to be shown on the plans.

3. Toe walls shall be used whenever the anticipated velocity of discharge and soil type are such that erosive action would occur. Toe walls are not required where ditch pavement is provided, except when disjointing would occur if the ditch pavement should fail.

STATE OF FLORIDA DEPARTMENT OF TRANSPORTATION
ROAD DESIGN

FLARED END SECTION

	Names	Dates
Designed by	EGR	9/77
Drawn by	HKH	9/77
Checked by	JVG	9/77
F.H.W.A.	Approved	9/23/77

Approved By
Deputy Design Engineer, Roadway

Revision No.	Sheet No.	Index No.
85	1 of 1	270

DIMENSIONS AND QUANTITIES

	D	X	A	B	C	E	F	G	M Single Pipe	M Double Pipe	M Triple Pipe	M Quad Pipe	N	Concrete (cu yds.) Single Pipe	Concrete Double Pipe	Concrete Triple Pipe	Concrete Quad. Pipe	Sodding (sq yds.) Single Pipe	Sodding Double Pipe	Sodding Triple Pipe	Sodding Quad. Pipe
2:1 Slope	15"	2'-7"	1.92'	2.18'	4.10'	2.05'	5'	1.22'	4.63'	7.21'	9.79'	12.37'	1.19'	0.27	0.41	0.54	0.67	21	24	27	30
	18"	2'-10"	1.97'	2.74'	4.71'	2.56'	6'	1.41'	4.92'	7.75'	10.58'	13.42'	1.21'	0.31	0.45	0.60	0.75	22	25	28	31
	24"	3'-5"	2.06'	3.86'	5.91'	3.56'	7'	1.73'	5.50'	8.92'	12.33'	15.75'	1.25'	0.39	0.59	0.79	1.00	24	28	32	35
	30"	4'-3"	2.15'	4.95'	7.10'	4.56'	8'	2.00'	6.08'	10.33'	14.58'	18.83'	1.29'	0.46	0.78	1.04	1.32	26	31	35	40
	36"	5'-1"	2.25'	6.08'	8.33'	5.56'	9'	2.24'	6.67'	11.75'	16.83'	21.92'	1.33'	0.55	0.94	1.33	1.71	28	34	39	45
	42"	6'-0"	2.34'	7.21'	9.55'	6.56'	10'	2.45'	7.25'	13.25'	19.25'	25.25'	1.38'	0.66	1.15	1.66	2.15	30	37	43	50
	48"	6'-9"	2.43'	8.33'	10.76'	7.56'	11'	2.65'	7.83'	14.66'	21.33'	28.08'	1.42'	0.76	1.37	1.96	2.67	32	39	47	54
	54"	7'-6"	2.52'	9.44'	11.96'	8.56'	12'	2.83'	8.42'	16.08'	23.75'	31.42'	1.46'	0.87	1.62	2.38	3.14	34	42	51	59
	60"	8'-6"	2.62'	10.56'	13.18'	9.56'	14'	3.00'	9.00'	17.50'	26.00'	34.50'	1.50'	0.99	1.90	2.81	3.73	36	45	55	64
	66"	9'-2"	2.71'	11.68'	14.39'	10.56'	15'	3.18'	9.58'	18.75'	27.92'	37.08'	1.54'	1.11	2.15	3.21	4.27	38	48	58	68
	72"	10'-0"	2.80'	12.80'	15.60'	11.56'	16'	3.30'	10.16'	20.16'	30.16'	40.16'	1.58'	1.24	2.46	3.68	4.90	40	51	62	73
4:1 Slope	15"	2'-7"	2.27'	4.09'	6.35'	4.03'	8'	1.22'	4.63'	7.21'	9.79'	12.37'	1.19'	0.40	0.81	0.80	1.00	23	26	29	32
	18"	2'-10"	2.36'	5.12'	7.48'	5.03'	9'	1.41'	4.92'	7.75'	10.58'	13.42'	1.21'	0.47	0.89	0.91	1.14	25	28	31	35
	24"	3'-5"	2.53'	7.18' △	9.71'	7.03' △	11'	1.73'	5.50'	8.92'	12.33'	15.75'	1.25'	0.60	0.90	1.21	1.52	28	32	36	40
	30"	4'-3"	2.70'	9.25'	11.95'	9.03'	13'	2.00'	6.08'	10.33'	14.58'	18.83'	1.29'	0.76	1.19	1.63	2.07	31	36	41	46
	36"	5'-1"	2.87'	11.31' ◇	14.18'	11.03' ◇	15'	2.24'	6.67'	11.75'	16.83'	21.92'	1.33'	0.89	1.48	2.05	2.63	34	40	46	52
	42"	6'-0"	3.05'	13.37'	16.42'	13.03'	17'	2.45'	7.25'	13.25'	19.25'	25.25'	1.38'	1.05	1.82	2.57	3.34	38	44	51	58
	48"	6'-9"	3.22'	15.43'	18.65'	15.03'	19'	2.65'	7.83'	14.58'	21.33'	28.08'	1.42'	1.21	2.15	3.07	4.00	41	48	56	63
	54"	7'-6"	3.39'	17.49'	20.88'	17.03'	21'	2.83'	8.42'	16.08'	23.75'	31.42'	1.46'	1.39	2.55	3.72	4.88	44	52	61	69
	60"	8'-6"	3.56'	19.55'	23.11'	19.03'	23'	3.00'	9.00'	17.50'	26.00'	34.50'	1.50'	1.59	3.02	4.44	5.86	47	56	66	75
	66"	9'-2"	3.73'	21.62'	24.36'	21.03'	25'	3.18'	9.58'	18.75'	27.92'	37.08'	1.54'	1.91	3.66	5.40	7.15	49	59	69	80
	72"	10'-0"	3.91'	22.68'	26.59'	23.03'	27'	3.30'	10.16'	20.16'	30.16'	40.16'	1.58'	2.12	4.18	6.24	8.30	52	65	74	85

B
△ 6.42'
◇ 10.40'

E
△ 6.25'
◇ 10.10'

Dimensions permitted to allow use of 8' standard pipe lengths.
Dimensions permitted to allow use of 12' standard pipe lengths.

△◇ Concrete slab shall be deepened to form bridge across crown of pipe. See section below.

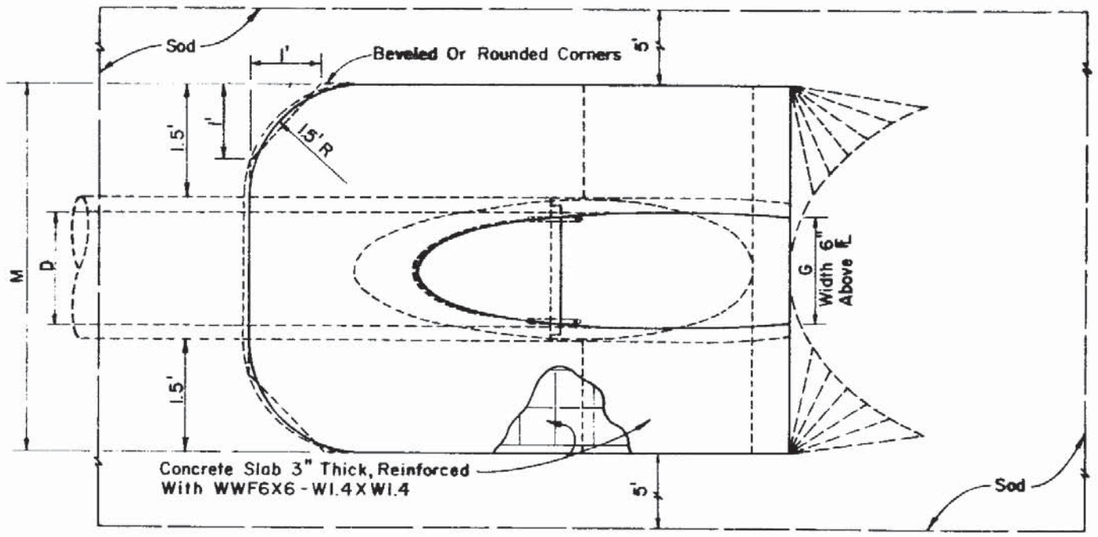

TOP VIEW - SINGLE PIPE

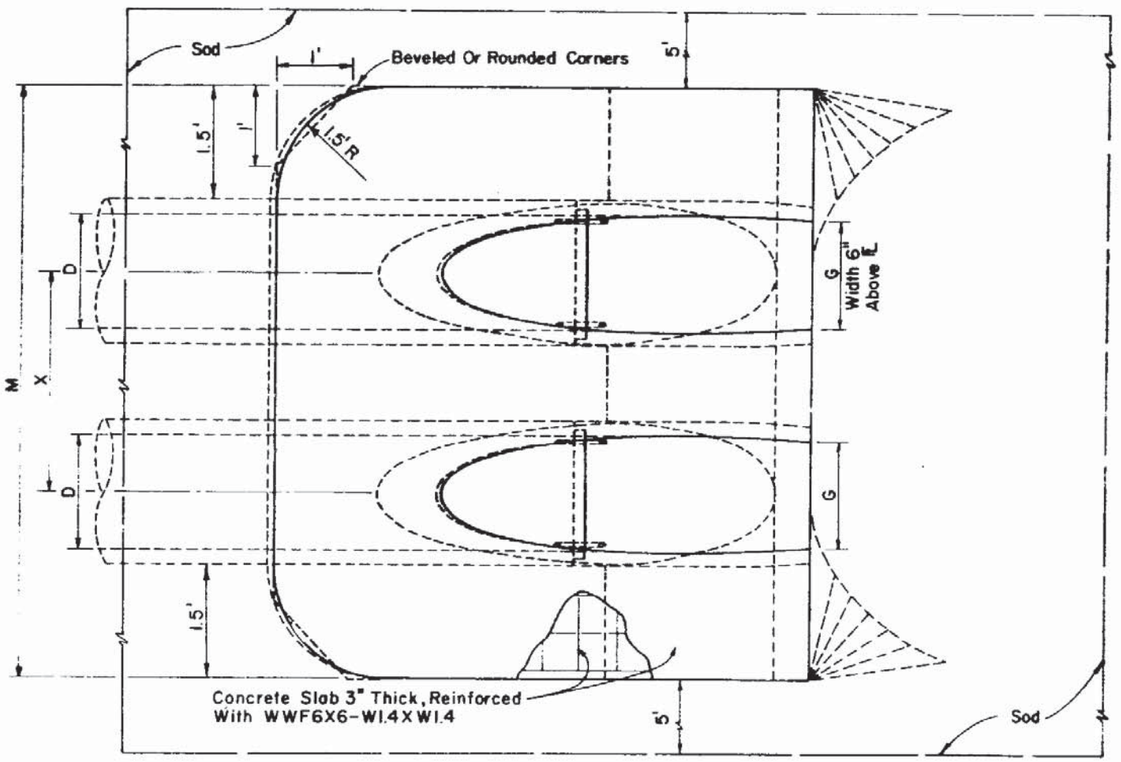

TOP VIEW - MULTIPLE PIPE

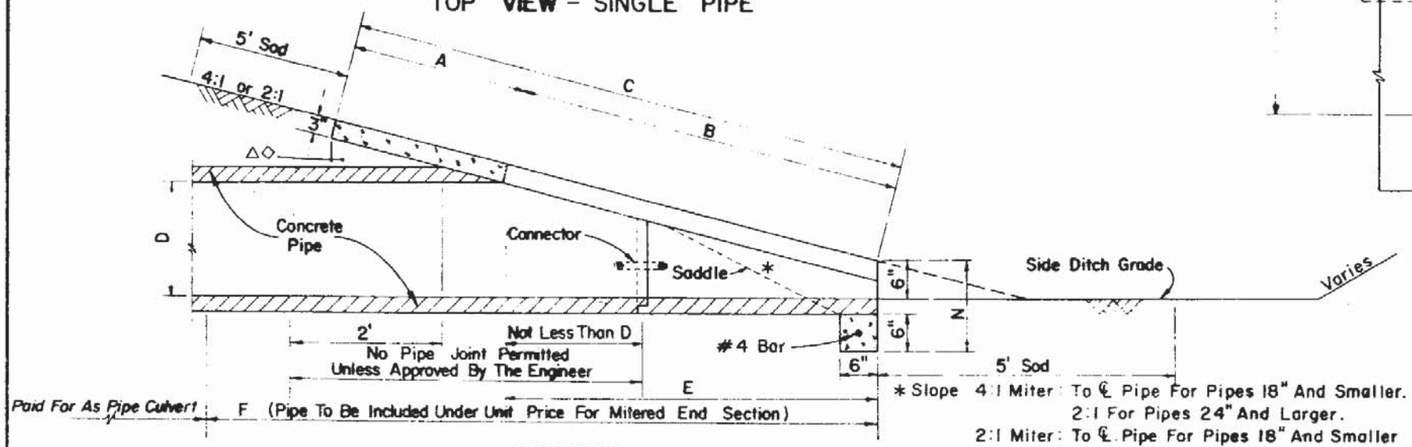

SECTION

* Slope 4:1 Miter: To ℄ Pipe For Pipes 18" And Smaller.
2:1 For Pipes 24" And Larger.
2:1 Miter: To ℄ Pipe For Pipes 18" And Smaller
1:1 For Pipes 24" And Larger.

NOTE: See Sheet 5 for Details and Notes

STATE OF FLORIDA DEPARTMENT OF TRANSPORTATION
ROAD DESIGN

CROSS DRAIN MITERED END SECTION

SINGLE AND MULTIPLE ROUND CONCRETE PIPE

	Names	Dates
Designed by	DCB	6/78
Drawn by		
Checked by	KNM	6/78
F.H.W.A. Approved: 7/21/78		

Approved By
State Design Engineer, Roadways

Revision No.	Sheet No.	Index No.
86	1 of 5	272

DIMENSIONS AND QUANTITIES

	D	X	A	B	C	E	F	G	M Single Pipe	M Double Pipe	M Triple Pipe	M Quad. Pipe	N	CONCRETE (CU.YDS.) Single Pipe	CONCRETE (CU.YDS.) Double Pipe	CONCRETE (CU.YDS.) Triple Pipe	CONCRETE (CU.YDS.) Quad. Pipe	SODDING (SQ.YDS.) Single Pipe	SODDING (SQ.YDS.) Double Pipe	SODDING (SQ.YDS.) Triple Pipe	SODDING (SQ.YDS.) Quad. Pipe
2:1 Slope	15"	2'-7"	2.5'	1.68'	4.18'	1.50'	5'	1.23'	4.33'	6.92'	9.50'	12.08'	1.04'	0.24	0.37	0.51	0.64	21	24	27	29
	18"	2'-10"	2.5'	2.24'	4.74'	2.00'	6'	1.41'	4.58'	7.42'	10.25'	13.08'	1.04'	0.26	0.43	0.61	0.78	22	25	28	31
	24"	3'-5"	2.5'	3.35'	5.85'	3.00'	7'	1.73'	5.08'	8.50'	11.92'	15.33'	1.04'	0.32	0.52	0.72	0.91	23	27	31	35
	30"	4'-3"	2.5'	4.47'	6.97'	4.00'	8'	2.00'	5.58'	9.83'	14.08'	18.33'	1.04'	0.38	0.64	0.91	1.18	25	30	35	39
	36"	5'-1"	2.5'	5.59'	8.09'	5.00'	9'	2.24'	6.08'	11.17'	16.25'	21.33'	1.04'	0.44	0.78	1.13	1.48	27	33	38	44
	42"	6'-0"	2.5'	6.71'	9.21'	6.00'	10'	2.45'	6.58'	12.58'	18.58'	24.58'	1.04'	0.51	0.96	1.41	1.87	29	36	42	49
	48"	6'-9"	2.5'	7.83'	10.33'	7.00'	11'	2.65'	7.08'	13.83'	20.58'	27.33'	1.04'	0.57	1.09	1.63	2.15	31	38	46	53
	54"	7'-8"	2.5'	8.94'	11.44'	8.00'	12'	2.85'	7.58'	15.25'	22.92'	30.58'	1.04'	0.65	1.32	1.99	2.66	33	41	50	58
	60"	8'-6"	2.5'	10.06'	12.56'	9.00'	13'	3.00'	8.08'	16.58'	25.08	33.58'	1.04'	0.71	1.49	2.28	3.07	34	44	53	63
4:1 Slope	15"	2'-7"	2.5'	3.09'	5.59'	3.0'	7.0'	1.23'	4.33'	6.92'	9.50'	12.08'	1.04'	0.31	0.47	0.63	0.79	22	25	28	31
	18"	2'-10"	2.5'	4.12'	6.62'	4.0'	8.0'	1.41'	4.58'	7.42'	10.25'	13.08'	1.04'	0.34	0.53	0.71	0.90	24	27	30	33
	24"	3'-5"	2.5'	6.16'	8.66'	6.0'	10.0'	1.73'	5.08'	8.50'	11.92'	15.33'	1.04'	0.44	0.69	0.92	1.18	27	30	34	38
	30"	4'-3"	2.5'	8.25'	10.75'	8.0'	12.0'	2.00'	5.58'	9.83'	14.08'	18.33'	1.04'	0.53	0.88	1.25	1.60	29	34	39	44
	36"	5'-1"	2.5'	10.31'	12.81'	10.0'	14.0'	2.24'	6.08'	11.17'	16.25'	21.33'	1.04'	0.62	1.07	1.53	2.00	32	38	44	49
	42"	6'-0"	2.5'	12.37'	14.87'	12.0'	16.0'	2.45'	6.58'	12.58'	18.58'	24.58'	1.04'	0.71	1.30	1.92	2.52	35	42	48	55
	48"	6'-9"	2.5'	14.43'	16.93'	14.0'	18.0'	2.65'	7.08'	13.83'	20.58'	27.33'	1.04'	0.80	1.54	2.29	3.02	38	46	53	60
	54"	7'-8"	2.5'	16.49'	18.99'	16.0'	20.0'	2.83'	7.58'	15.25'	22.92'	30.58'	1.04'	0.91	1.83	2.74	3.67	41	49	58	66
	60"	8'-6"	2.5'	18.55'	21.05'	18.0'	22.0'	3.00'	8.08'	16.58'	25.08	33.58'	1.04'	1.02	2.15	3.27	4.39	44	53	63	72

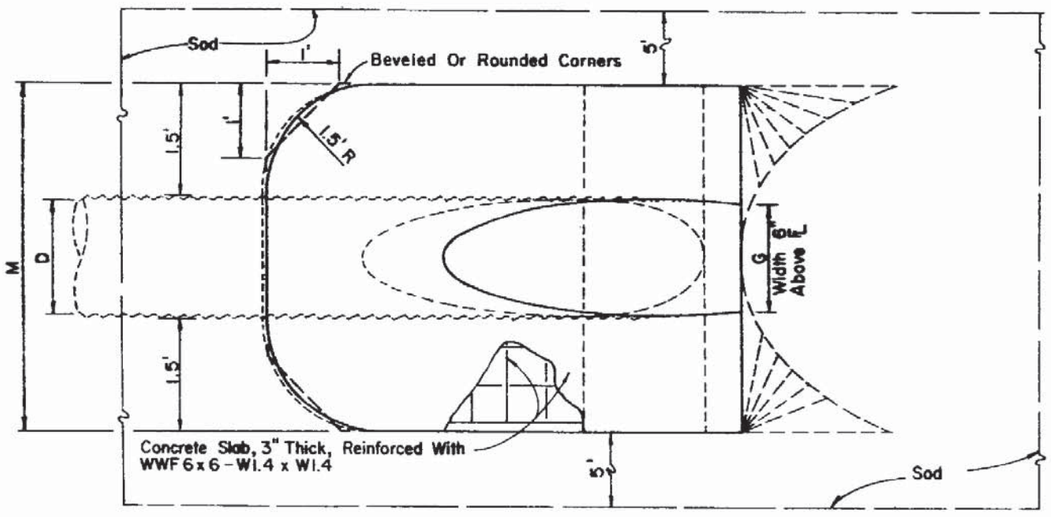

TOP VIEW - SINGLE PIPE

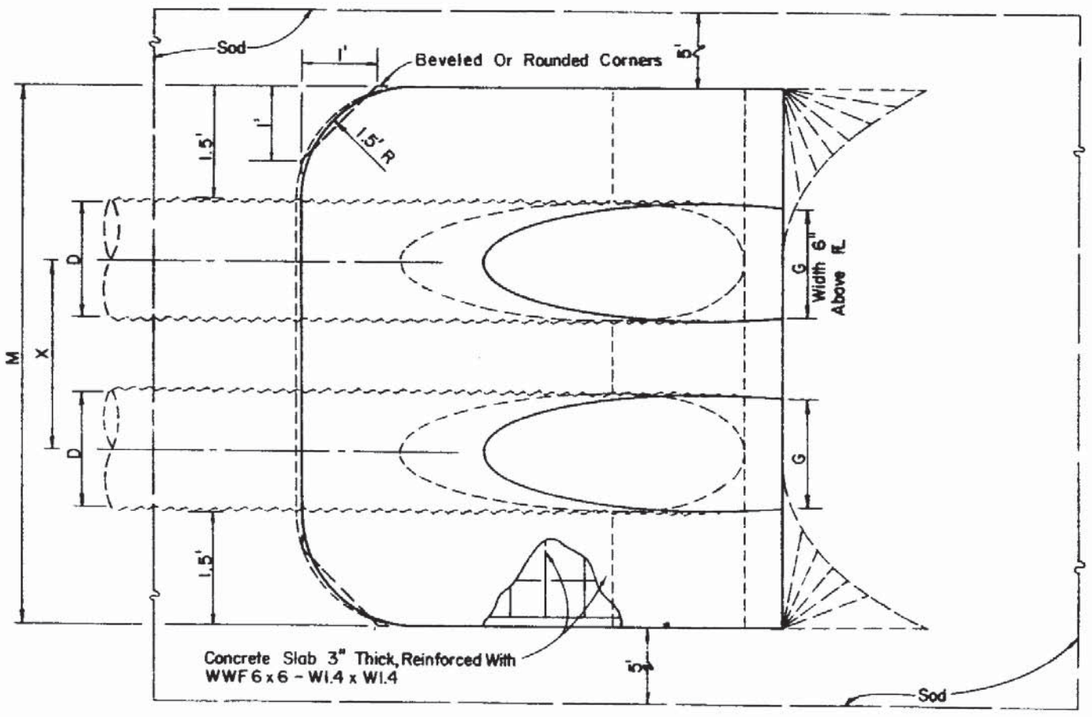

TOP VIEW - MULTIPLE PIPE

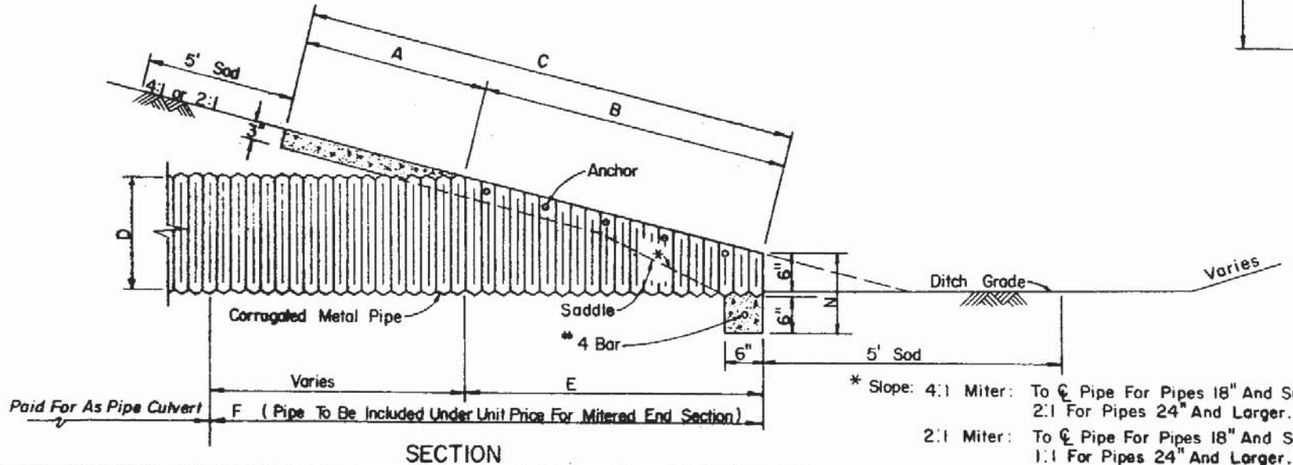

SECTION

* Slope: 4:1 Miter: To ℄ Pipe For Pipes 18" And Smaller
2:1 For Pipes 24" And Larger.
2:1 Miter: To ℄ Pipe For Pipes 18" And Smaller
1:1 For Pipes 24" And Larger.

NOTE: See Sheet 5 for Details and Notes.

STATE OF FLORIDA DEPARTMENT OF TRANSPORTATION
ROAD DESIGN

CROSS DRAIN MITERED END SECTION

SINGLE AND MULTIPLE ROUND CORRUGATED METAL PIPE

	Names	Dates
Designed by	DCB	6/78
Drawn by		
Checked by	KWM	6/78
F.H.W.A. Approved		7/21/78

Approved By: Deputy Design Engineer, Roadways

Revision No.	Sheet No.	Index No.
86	2 of 5	272

DIMENSIONS AND QUANTITIES

1974 AASHTO

	SPAN	RISE	X	A	B	C	E	F	G	M Single Pipe	M Double Pipe	M Triple Pipe	M Quad Pipe	N	CONCRETE (CU.YDS.) Single Pipe	CONCRETE (CU.YDS.) Double Pipe	CONCRETE (CU.YDS.) Triple Pipe	CONCRETE (CU.YDS.) Quad. Pipe	SODDING (SQ YDS) Single Pipe	SODDING (SQ YDS) Double Pipe	SODDING (SQ YDS) Triple Pipe	SODDING (SQ YDS) Quad. Pipe
2:1 Slope	17"	13"	2'-6"	2.5'	1.30'	3.80'	1.17'	4'	1.39'	4.50'	7.00'	9.50'	12.00'	1.04'	0.25	0.37	0.49	0.61	21	23	26	29
	21"	15"	2'-10"	2.5'	1.68'	4.17'	1.50'	5'	1.76'	4.83'	7.67'	10.50'	13.33'	1.04'	0.26	0.39	0.53	0.66	22	25	28	31
	28"	20"	3'-5"	2.5'	2.61'	5.11'	2.33'	6'	2.22'	5.42'	8.83'	12.25'	15.67'	1.04'	0.32	0.49	0.66	0.83	23	27	30	34
	35"	24"	4'-0"	2.5'	3.35'	5.85'	3.00'	7'	2.55'	6.00'	10.00'	14.00'	18.00'	1.04'	0.37	0.58	0.79	1.00	24	29	33	38
	42"	29"	4'-9"	2.5'	4.29'	6.79'	3.83'	8'	2.97'	6.58'	11.33'	16.08'	20.83'	1.04'	0.42	0.69	0.96	1.22	25	31	37	42
	49"	33"	5'-6"	2.5'	5.03'	7.53'	4.50'	9'	3.34'	7.17'	12.67'	18.17'	23.67'	1.04'	0.49	0.82	1.15	1.48	28	34	40	46
	57"	38"	6'-4"	2.5'	5.96'	8.46'	5.33'	10'	3.65'	7.83'	14.17'	20.50'	26.83'	1.04'	0.55	0.95	1.35	1.75	29	36	44	51
	64"	43"	7'-1"	2.5'	6.89'	9.39'	6.17'	11'	3.89'	8.42'	15.50'	22.58'	29.67'	1.04'	0.62	1.10	1.57	2.05	31	39	47	55
	71"	47"	7'-10"	2.5'	7.64'	10.14'	6.83'	12'	4.14'	9.00'	16.83'	24.67'	32.50'	1.04'	0.69	1.24	1.80	2.35	33	41	50	59
4:1 Slope	17"	13"	2'-6"	2.5'	2.41'	4.91'	2.33'	7'	1.39'	4.50'	7.00'	9.50'	12.00'	1.04'	0.28	0.42	0.56	0.70	22	25	27	30
	21"	15"	2'-10"	2.5'	3.09'	5.59'	3.00'	8'	1.76'	4.83'	7.67'	10.50'	13.33'	1.04'	0.32	0.49	0.66	0.78	23	26	29	32
	28"	20"	3'-5"	2.5'	4.81'	7.31'	4.67'	9'	2.22'	5.42'	8.83'	12.25'	15.67'	1.04'	0.40	0.60	0.82	1.03	25	29	33	37
	35"	24"	4'-0"	2.5'	6.18'	8.68'	6.00'	11'	2.55'	6.00'	10.00'	14.00'	18.00'	1.04'	0.48	0.77	1.05	1.33	28	32	37	41
	42"	29"	4'-9"	2.5'	7.90'	10.40'	7.67'	12'	2.97'	6.58'	11.33'	16.08'	20.83'	1.04'	0.57	0.92	1.27	1.62	30	35	41	46
	49"	33"	5'-6"	2.5'	9.28'	11.78'	9.00'	14'	3.34'	7.17'	12.67'	18.17'	23.67'	1.04'	0.65	1.08	1.50	1.93	32	38	45	51
	57"	38"	6'-4"	2.5'	11.00'	13.50'	10.67'	16'	3.65'	7.83'	14.17'	20.50'	26.83'	1.04'	0.76	1.30	1.83	2.37	35	42	49	56
	64"	43"	7'-1"	2.5'	12.71'	15.21'	12.33'	17'	3.89'	8.42'	15.50'	22.58'	29.67'	1.04'	0.87	1.55	2.18	2.83	38	45	53	61
	71"	47"	7'-10"	2.5'	14.09'	16.59'	13.67'	19'	4.14'	9.00'	16.83'	24.67'	32.50'	1.04'	0.95	1.68	2.43	3.17	40	48	57	66

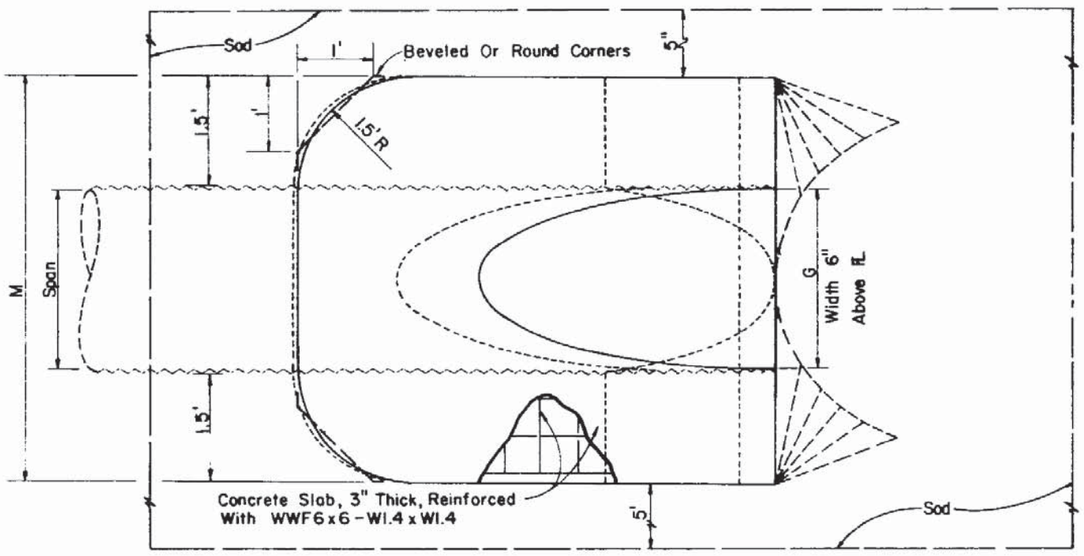

TOP VIEW - SINGLE PIPE

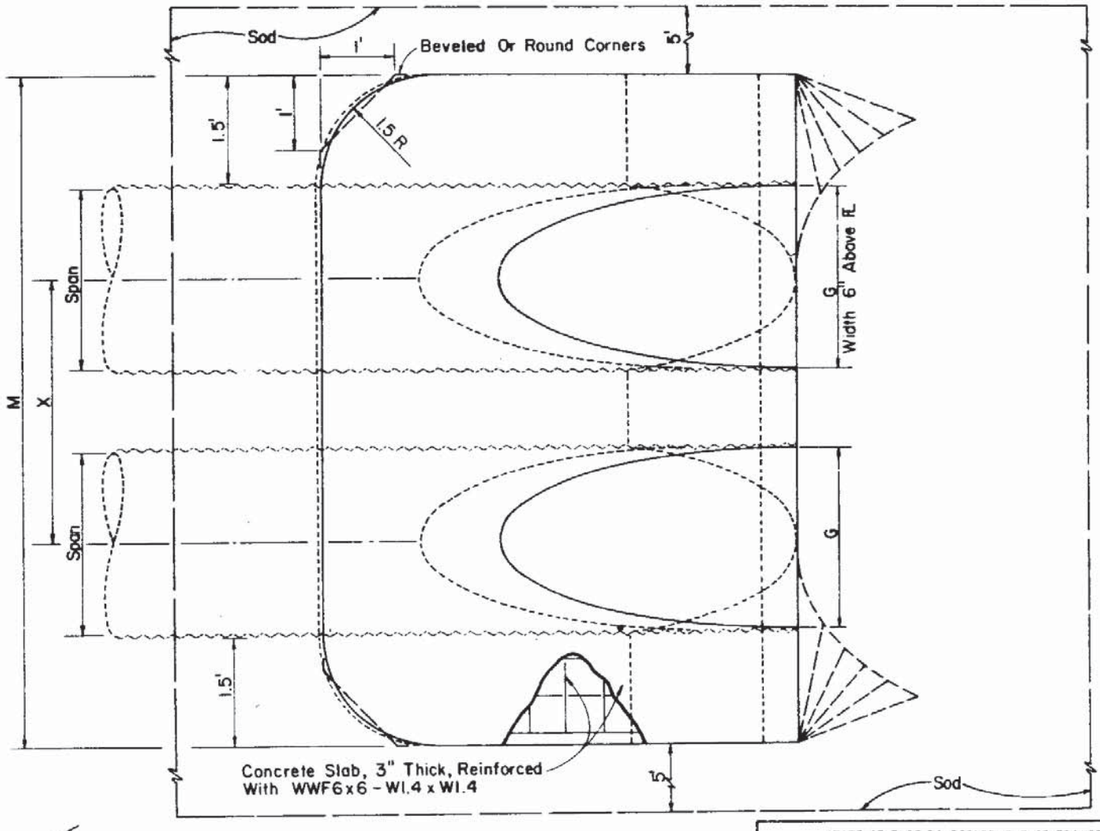

TOP VIEW - MULTIPLE PIPE

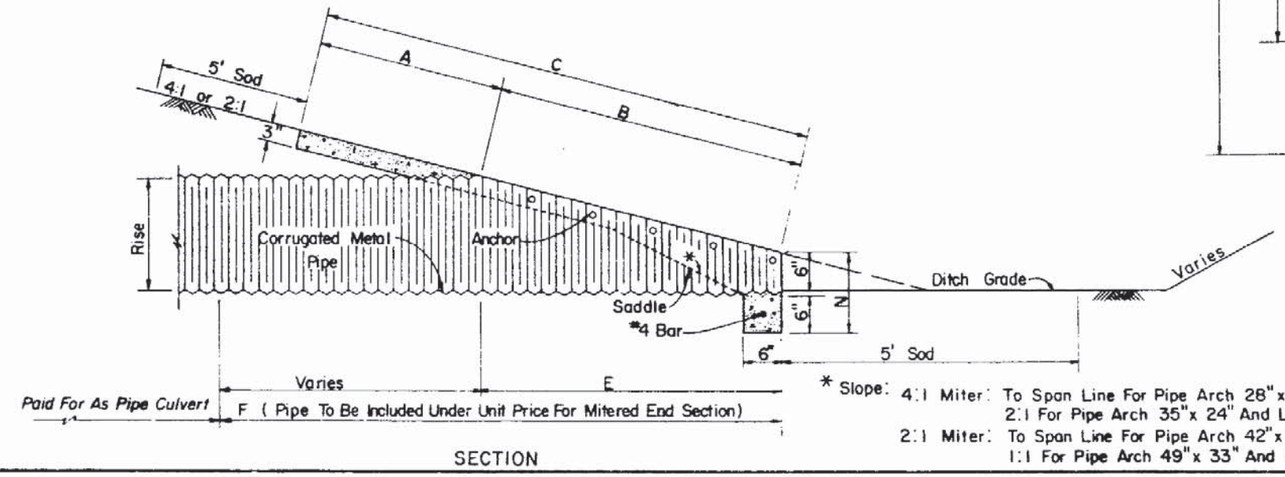

SECTION

* Slope: 4:1 Miter: To Span Line For Pipe Arch 28"x 20" And Smaller
2:1 For Pipe Arch 35"x 24" And Larger.
2:1 Miter: To Span Line For Pipe Arch 42"x 29" And Smaller (Vertical For 17"x 13")
1:1 For Pipe Arch 49"x 33" And Larger.

NOTE: See Sheet 5 For Details And Notes.

STATE OF FLORIDA DEPARTMENT OF TRANSPORTATION
ROAD DESIGN

CROSS DRAIN MITERED END SECTION

SINGLE AND MULTIPLE CORRUGATED METAL PIPE-ARCH

	Names	Dates
Designed by	D.C.B	6/78
Drawn by		
Checked by	K.N.M	6/78
F.H.W.A. Approved		7/21/78

Approved By: Deputy Design Engineer, Roadways

Revision No.	Sheet No.	Index No.
86	3 of 5	272

DIMENSIONS & QUANTITIES

	Rise R	Span S	X	A	B	C	E	F	G	M Single Pipe	M Double Pipe	M Triple Pipe	M Quad. Pipe	N	CONCRETE (Cu. Yds.) Single Pipe	CONCRETE Double Pipe	CONCRETE Triple Pipe	CONCRETE Quad. Pipe	SODDING (Sq. Yds.) Single Pipe	SODDING Double Pipe	SODDING Triple Pipe	SODDING Quad. Pipe
2:1 Slope	12"	18"	2'-10"	1.97'	1.62'	3.59'	1.56'	4'	1.50'	4.92'	7.75'	10.58'	13.42'	1.21'	0.19	0.33	0.45	0.57	21	24	27	30
	14"	23"	3'-4"	2.01'	1.99'	4.00'	1.69'	5'	1.90'	5.38'	8.71'	12.04'	15.38'	1.23'	0.25	0.40	0.55	0.69	22	26	29	33
	19"	30"	4'-0"	2.11	2.92'	5.03'	2.73	6'	2.37'	6.04'	10.04'	14.04'	18.04'	1.27'	0.34	0.55	0.75	0.95	24	29	33	37
	24"	38"	5'-0"	2.20'	3.85'	6.05'	3.56'	7'	2.85'	6.79'	11.79'	16.79'	21.79'	1.31'	0.43	0.71	1.00	1.28	26	31	37	42
	29"	45"	5'-11"	2.34'	4.79'	7.13'	4.39'	8'	3.19'	7.50'	13.42'	19.33'	25.25'	1.38'	0.52	0.90	1.27	1.65	28	34	41	47
	34"	53"	7'-0"	2.43'	5.72'	8.15'	5.23'	9'	3.57'	8.25'	15.25'	22.25'	29.25'	1.42'	0.62	1.11	1.60	2.09	30	37	45	53
	38"	60"	7'-10"	2.52'	6.46'	8.98'	5.89'	9'	3.95'	8.92'	16.75'	24.58'	32.42'	1.46'	0.70	1.29	1.87	2.46	31	40	49	57
	43"	68"	8'-11"	2.62'	7.39'	10.01'	6.73'	10'	4.28'	9.67'	18.58'	27.50'	36.42'	1.50'	0.81	1.54	2.26	2.99	33	43	53	63
	48"	76"	9'-11"	2.71'	8.33'	11.04'	7.56'	11'	4.59'	10.42'	20.33'	30.25'	40.17'	1.54'	0.93	1.79	2.66	3.53	35	46	57	68
	53"	83"	10'-8"	2.80'	9.26'	12.06'	8.39'	12'	4.77'	11.08'	21.75'	32.42'	43.08'	1.58'	1.04	2.04	3.03	4.02	37	49	61	73
	58"	91"	11'-8"	2.90'	10.19'	13.09'	9.23'	13'	5.01'	11.83'	23.50'	35.17'	46.83'	1.63'	1.17	2.33	3.49	4.66	39	52	65	78
4:1 Slope	12"	18"	2'-10"	2.36'	3.06'	5.42'	3.03'	5'	1.50'	4.92'	7.75'	10.58'	13.42'	1.21'	0.30	0.45	0.61	0.76	23	26	29	32
	14"	23"	3'-4"	2.44'	3.75'	6.19'	3.70'	6'	1.90'	5.38'	8.71'	12.04'	15.38'	1.23'	0.36	0.56	0.76	0.95	24	28	32	35
	19"	30"	4'-0"	2.62'	5.47'	8.09'	5.36'	8'	2.37'	6.04'	10.04'	14.04'	18.04'	1.27'	0.51	0.79	1.08	1.36	27	32	36	40
	24"	38"	5'-0"	2.79'	7.18'	9.97'	7.03'	10'	2.85'	6.79'	11.79'	16.79'	21.79'	1.31'	0.68	1.10	1.53	1.96	30	36	41	47
	29"	45"	5'-11"	3.05'	8.90'	11.95'	8.70'	12'	3.19'	7.50'	13.42'	19.33'	25.25'	1.38'	0.86	1.45	2.04	2.63	33	40	46	53
	34"	53"	7'-0"	3.22'	10.62'	13.84'	10.36'	13'	3.57'	8.25'	15.25'	22.25'	29.25'	1.42'	1.02	1.81	2.60	3.39	36	44	52	59
	38"	60"	7'-10"	3.39'	11.99'	15.38'	11.70'	15'	3.95'	8.92'	16.75'	24.58'	32.42'	1.46'	1.18	2.14	3.10	4.05	38	47	56	65
	43"	68"	8'-11"	3.56'	13.71'	17.27'	13.36'	17'	4.28'	9.67'	18.58'	27.50'	36.42'	1.50'	1.38	2.58	3.79	4.99	41	5	61	71
	48"	76"	9'-11"	3.75'	15.43'	19.16'	15.03'	19'	4.59'	10.42'	20.33'	30.25'	40.17'	1.54'	1.59	3.05	4.51	5.97	44	55	66	77
	53"	83"	10'-8"	3.91'	17.15'	21.06'	16.70'	20'	4.77'	11.08'	21.75'	32.42'	43.08'	1.58'	1.80	3.50	5.19	6.88	47	59	71	83
	58"	91"	11'-8"	4.08'	18.87'	22.95'	18.36'	22'	5.01'	11.83'	23.50'	35.17'	46.83'	1.63'	2.04	4.04	6.05	8.05	50	63	76	89

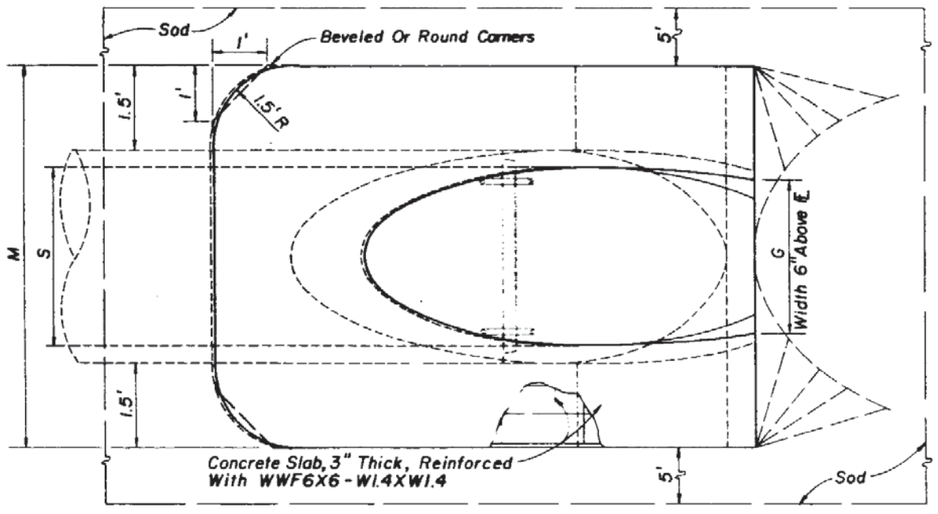

TOP VIEW - SINGLE PIPE

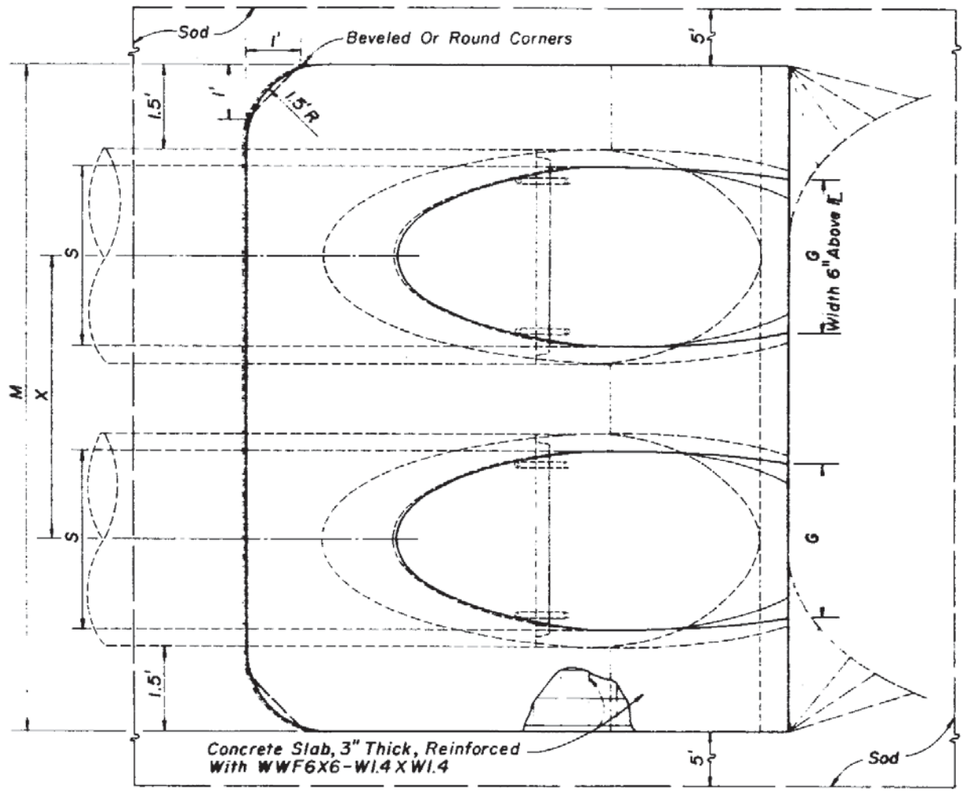

TOP VIEW - MULTIPLE PIPE

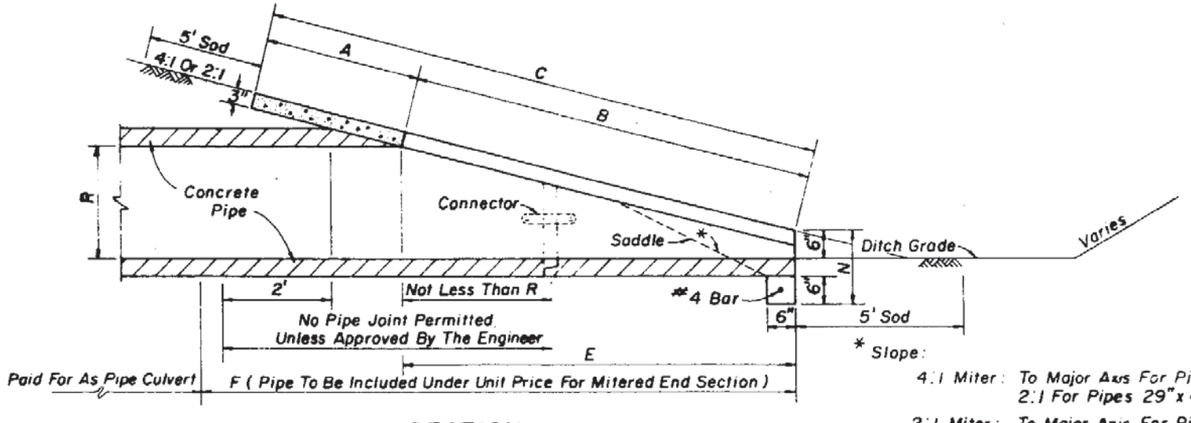

SECTION

* Slope:

4:1 Miter: To Major Axis For Pipes 24"x 38" And Smaller.
2:1 For Pipes 29"x 45" And Larger.

2:1 Miter: To Major Axis For Pipes 29"x 45" And Smaller.
1:1 For Pipes 34"x 53" And Larger.

Note: See Sheet 5 For Details And Notes.

STATE OF FLORIDA DEPARTMENT OF TRANSPORTATION
ROAD DESIGN

CROSS DRAIN MITERED END SECTION

SINGLE AND MULTIPLE ELLIPTICAL CONCRETE PIPE

	Names	Dates
Designed by	EGR	6/81
Drawn by	HSD	6/81
Checked by	JVG / JBW	6/81
F.H.W.A. Approved:		10/8/81

Approved By D.C. Turnbull
Deputy Design Engineer, Roadways

Revision No.	Sheet No.	Index No.
86	4 of 5	272

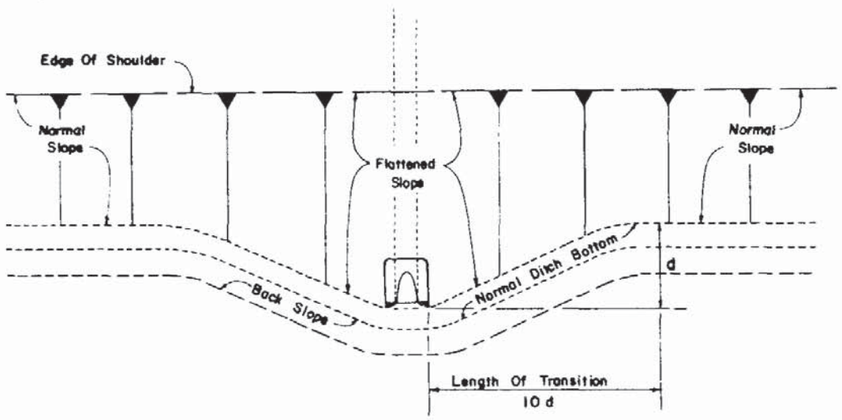

PLAN

SLOPE AND DITCH TRANSITIONS

GENERAL NOTES

1. Mitered end sections shall be paid for as mitered end section, each, based on each independent pipe end.
2. The cost of all pipe (s), fasteners, reinforcing, connectors, anchors, concrete, sealants, jackets, and coupling bands shall be included in the contract unit price for mitered end section, each. Sodding not included.
3. The reinforced concrete slab shall be constructed for all sizes of cross drain pipe and cast in place with Class I concrete.
4. Concrete pipe used in the assembly of mitered end sections shall be selective lengths to avoid excessive connections.
5. Corrugated metal pipe galvanizing that is damaged during beveling and perforating for mitered end section shall be repaired.
6. That portion of corrugated metal pipe in direct contact with the concrete slab shall be bituminous coated prior to placing of the concrete.
7. Unless otherwise designated in the plans, concrete pipe mitered end sections may be used with any type of cross drain pipe; corrugated steel pipe mitered end sections may be used with any type of cross drain pipe except aluminum pipe; and, corrugated aluminum mitered end sections may be used with any type of cross drain pipe except steel pipe. When bituminous coated metal pipe is specified for cross drain pipe, mitered end sections shall be constructed with like pipe or concrete pipe.
8. When the mitered end section pipe is dissimilar to the cross drain pipe, a concrete jacket shall be constructed in accordance with Standard Index 280.
9. When existing multiple cross drain pipes are spaced other than the dimensions shown in this detail, or have non-parallel axes, or have non-uniform sections, the mitered end sections will be constructed either separately as single pipe mitered end sections or collectively as multiple pipe end sections as directed by the Engineer; however, mitered end sections will be paid for each, based on each independent pipe end.
10. *Mitered end sections for pipe sizes 15", 18" and 24" round or equivalent pipe arch or elliptical pipe are permitted within the clear zone.* When the slope intersection permits, the mitered end section may be located with the culvert opening as close as 8' beyond the outside edge of the shoulder.
11. Slope and ditch transitions shall be used when the normal roadway slope must be flattened to place end section outside clear recovery area. See detail left.

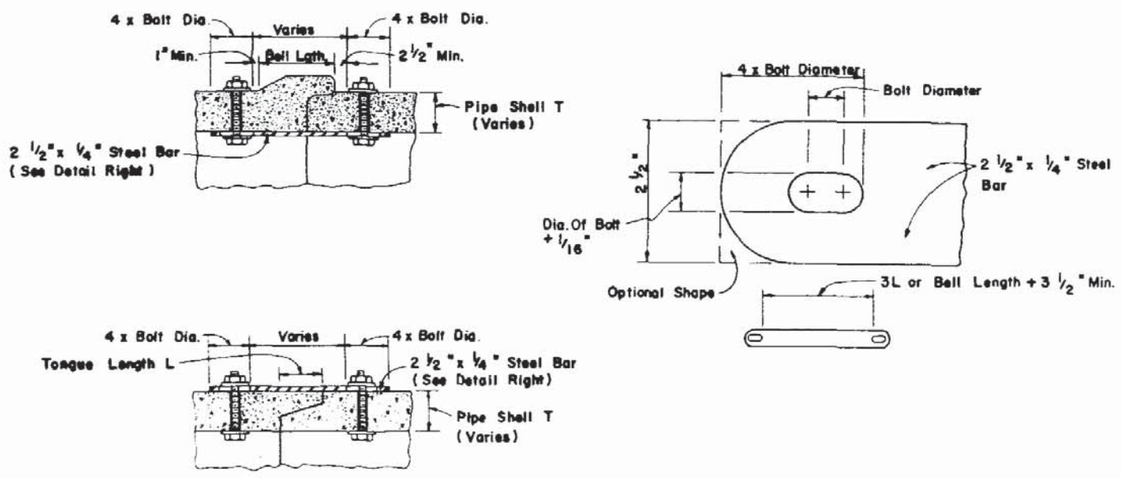

All bars, bolts, nuts and washers are to be galvanized steel.

Bolt diameters shall be 3/8" for 15" to 36" pipe and 5/8" for 42" to 72" pipe.

Two connectors required per joint, located 60° right and left of bottom center of pipe.

Bolt holes in pipe shell are to be drilled.

CONCRETE PIPE CONNECTOR

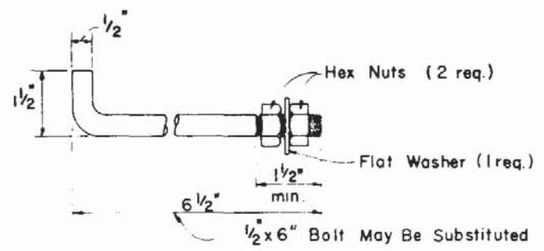

Anchors required for CMP only.

Anchor, washer and nuts to be galvanized steel.

Bend anchor where required to center in concrete slab. Damaged surfaces to be repaired after bending. Anchors are to be spaced a distance equal to four (4) corrugations. Place the anchors in the outside crest of corrugation.

Flat washers to be placed on inside wall of pipe.

ANCHOR DETAIL

CROSS DRAIN
MITERED END SECTION
SPECIAL DETAILS AND NOTES

Designed By: DCB 6/78	Approved By: [signature] Deputy Design Engineer, Roadways		
Checked By: KNM 6/78	Revision No. 85	Sheet No. 5 of 5	Index No. 272
FHWA Approved: 7/21/78			

DIMENSIONS & QUANTITIES

D	X	A	B	C	E	F	G	M				N	GRATE SIZES		CONCRETE (Cu. Yds.)				SODDING (Sq. Yds.)			
								Single Pipe	Double Pipe	Triple Pipe	Quad. Pipe		Standard Weight Pipe	Extra Strong Pipe	Single Pipe	Double Pipe	Triple Pipe	Quad. Pipe	Single Pipe	Double Pipe	Triple Pipe	Quad. Pipe
15"	2'-7"	2.27'	4.09'	6.36'	4.03'	8'	1.22'	4.63'	7.21'	9.79'	12.37'	1.19'			0.40	0.61	0.80	1.00	9	11	12	14
18"	2'-10"	2.36'	5.12'	7.48'	5.03'	9'	1.41'	4.92'	7.75'	10.58'	13.42'	1.21'			0.47	0.69	0.91	1.14	10	11	13	15
24"	3'-5"	2.53'	7.18' △	9.71'	7.03' △	11'	1.73'	5.50'	8.92'	12.33'	15.75'	1.25'			0.60	0.90	1.21	1.52	11	13	16	18
30"	4'-3"	2.70'	9.28'	11.96'	9.03'	13'	2.00'	6.08'	10.33'	14.58'	18.83'	1.29'	2½"	3"	0.76	1.19	1.63	2.07	12	15	18	21
36"	5'-1"	2.87'	11.31' ◇	14.18'	11.03' ◇	15'	2.24'	6.67'	11.75'	16.83'	21.92'	1.33'	2½"	3"	0.89	1.48	2.05	2.63	14	17	21	24
42"	6'-0"	3.05'	13.37'	16.42'	13.03'	17'	2.45'	7.25'	13.25'	19.25'	25.25'	1.38'	2½"	3½"	1.05	1.82	2.57	3.34	15	19	23	27
48"	6'-9"	3.22'	15.43'	18.65'	15.03'	19'	2.65'	7.83'	14.58'	21.33'	28.08'	1.42'	2½"	3½"	1.21	2.15	3.07	4.00	16	21	27	30
54"	7'-8"	3.39'	17.49'	20.88'	17.03'	21'	2.83'	8.42'	16.08'	23.75'	31.42'	1.46'	3"	4"	1.39	2.55	3.72	4.88	18	23	28	33
60"	8'-6"	3.56'	19.55'	23.11'	19.03'	23'	3.00'	9.00'	17.50'	26.00'	34.50'	1.50'	3"	4"	1.59	3.02	4.44	5.86	19	25	31	36

△ 6.42' △ 6.25' Dimensions permitted to allow use of 8' standard pipe lengths.
◇ 10.40' ◇ 10.10' Dimensions permitted to allow use of 12' standard pipe lengths.
△◇ Concrete slab shall be deepened to form bridge across crown of pipe. See section below.

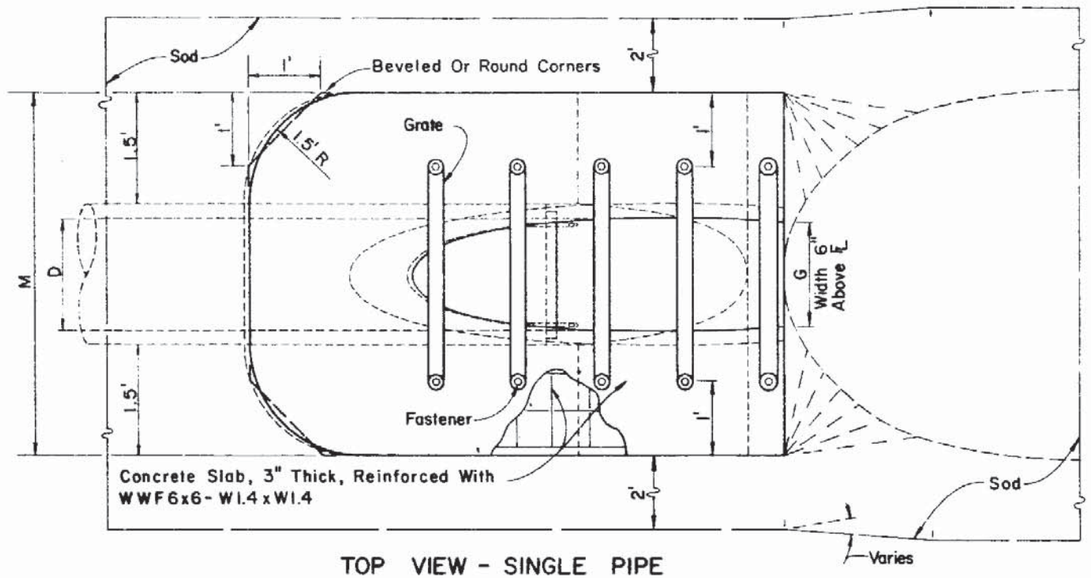

TOP VIEW - SINGLE PIPE

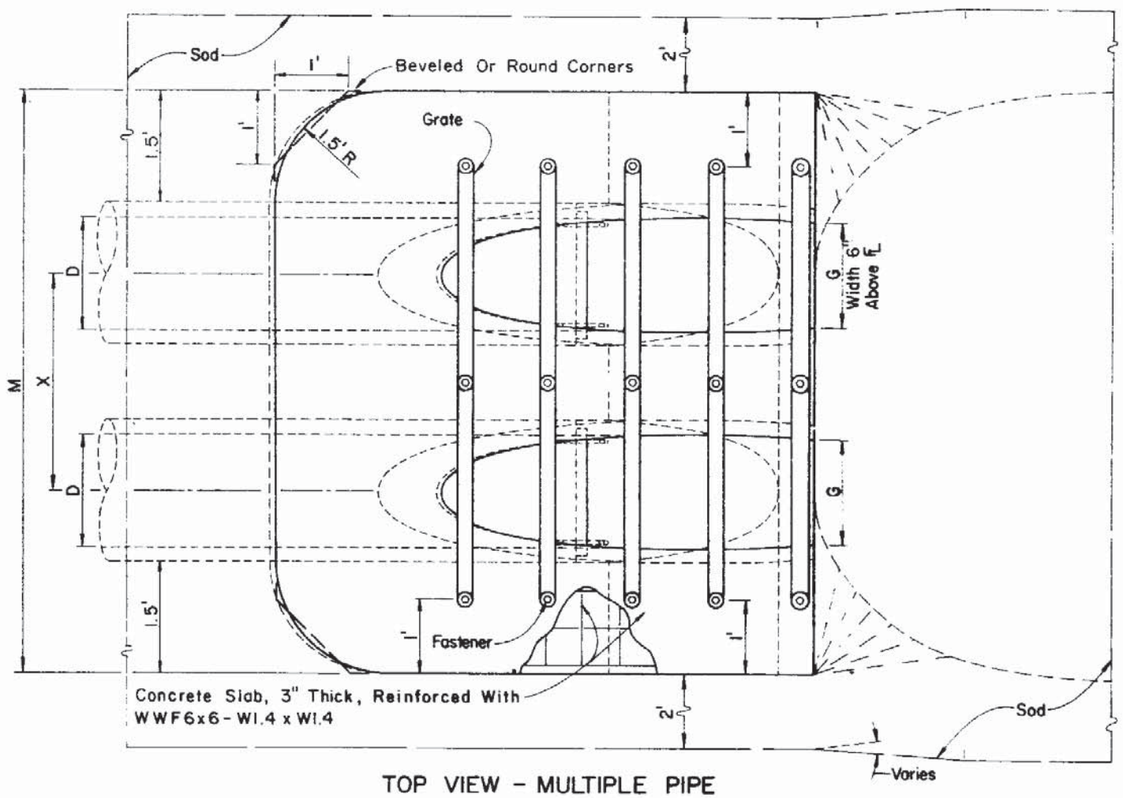

TOP VIEW - MULTIPLE PIPE

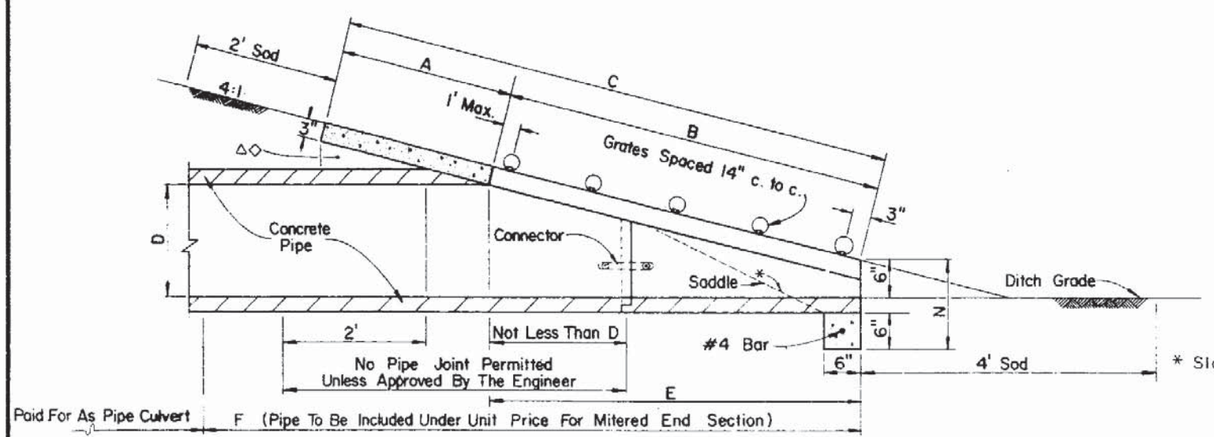

SECTION

Note:
See Sheet 5 for details and 6 for notes.

* Slope:
To ℄ Pipe For Pipes 18" And Smaller.
2:1 For Pipes 24" And Larger.

STATE OF FLORIDA DEPARTMENT OF TRANSPORTATION
ROAD DESIGN

SIDE DRAIN
MITERED END SECTION
SINGLE AND MULTIPLE ROUND CONCRETE PIPE

	Names	Dates
Designed by	EGR	6/78
Drawn by	HKH	6/78
Checked by	JVG	6/78
FHWA Approved		10/21/77

Approved By
Deputy Design Engineer, Roadways

Revision No.	Sheet No	Index No.
86	1 of 6	273

DIMENSIONS & QUANTITIES

D	X	A	B	C	E	F	G	M Single Pipe	M Double Pipe	M Triple Pipe	M Quad. Pipe	N	GRATE SIZES Standard Weight Pipe	GRATE SIZES Extra Strong Pipe	CONCRETE (Cu. Yds.) Single Pipe	CONCRETE (Cu. Yds.) Double Pipe	CONCRETE (Cu. Yds.) Triple Pipe	CONCRETE (Cu. Yds.) Quad. Pipe	SODDING (Sq. Yds.) Single Pipe	SODDING (Sq. Yds.) Double Pipe	SODDING (Sq. Yds.) Triple Pipe	SODDING (Sq. Yds.) Quad. Pipe
15"	2'-7"	2.5'	3.09'	5.59'	3.0'	7.0'	1.23'	4.33'	6.92'	9.50'	12.08'	1.04'			0.31	0.47	0.63	0.79	8	10	12	14
18"	2'-10"	2.5'	4.12'	6.62'	4.0'	8.0'	1.41'	4.58'	7.42'	10.25'	13.08'	1.04'			0.34	0.53	0.71	0.90	9	11	13	15
24"	3'-5"	2.5'	6.18'	8.68'	6.0'	10.0'	1.73'	5.08'	8.50'	11.92'	15.33'	1.04'			0.44	0.69	0.92	1.18	10	13	15	17
30"	4'-3"	2.5'	8.25'	10.75'	8.0'	12.0'	2.00'	5.58'	9.83'	14.08'	18.33'	1.04'	2½"	3"	0.53	0.88	1.25	1.60	11	14	17	20
36"	5'-1"	2.5'	10.31'	12.81'	10.0'	14.0'	2.24'	6.08'	11.17'	16.25'	21.33'	1.04'	2½"	3"	0.62	1.07	1.53	2.00	13	16	20	23
42"	6'-0"	2.5'	12.37'	14.87'	12.0'	16.0'	2.45'	6.58'	12.58'	18.58'	24.58'	1.04'	2½"	3½"	0.70	1.30	1.92	2.52	14	18	22	26
48"	6'-9"	2.5'	14.43'	16.93'	14.0'	18.0'	2.65'	7.08'	13.83'	20.58'	27.33'	1.04'	2½"	3½"	0.80	1.54	2.29	3.02	15	20	24	29
54"	7'-8"	2.5'	16.49'	18.99'	16.0'	20.0'	2.83'	7.58'	15.25'	22.92'	30.58'	1.04'	3"	4"	0.90	1.83	2.74	3.67	16	22	27	32
60"	8'-6"	2.5'	18.55'	21.05'	18.0'	22.0'	3.00'	8.08'	16.58'	25.08'	33.58'	1.04'	3"	4"	1.02	2.15	3.27	4.39	18	23	29	35
8"	2'-0"	2.5'	0.72'	3.22'	0.7'	4.0'	0.58'	3.75'	5.75'	7.75'	9.75'	1.04'			0.16	0.25	0.34	0.43	7	8	9	11
10"	2'-2"	2.5'	1.34'	3.84'	1.3'	5.0'	0.81'	3.92'	6.08'	8.25'	10.41'	1.04'			0.19	0.30	0.40	0.52	7	9	10	11
12"	2'-4"	2.5'	2.06'	4.56'	2.0'	6.0'	1.00'	4.08'	6.42'	8.75'	11.08'	1.04'			0.22	0.36	0.49	0.63	7	9	11	12

These sizes are restricted to inlet and outlet treatment for water management systems or similar applications.

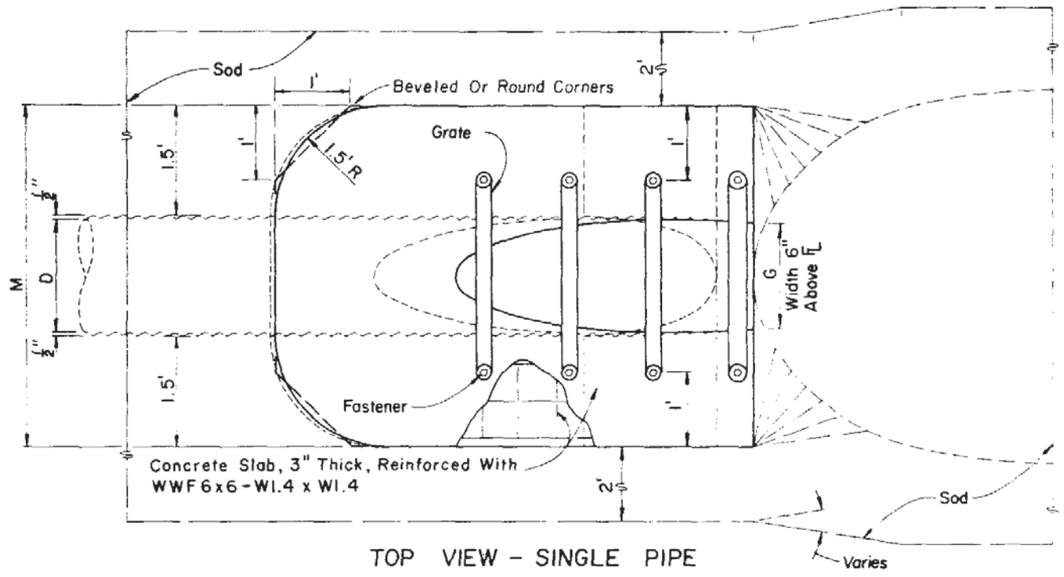

TOP VIEW - SINGLE PIPE

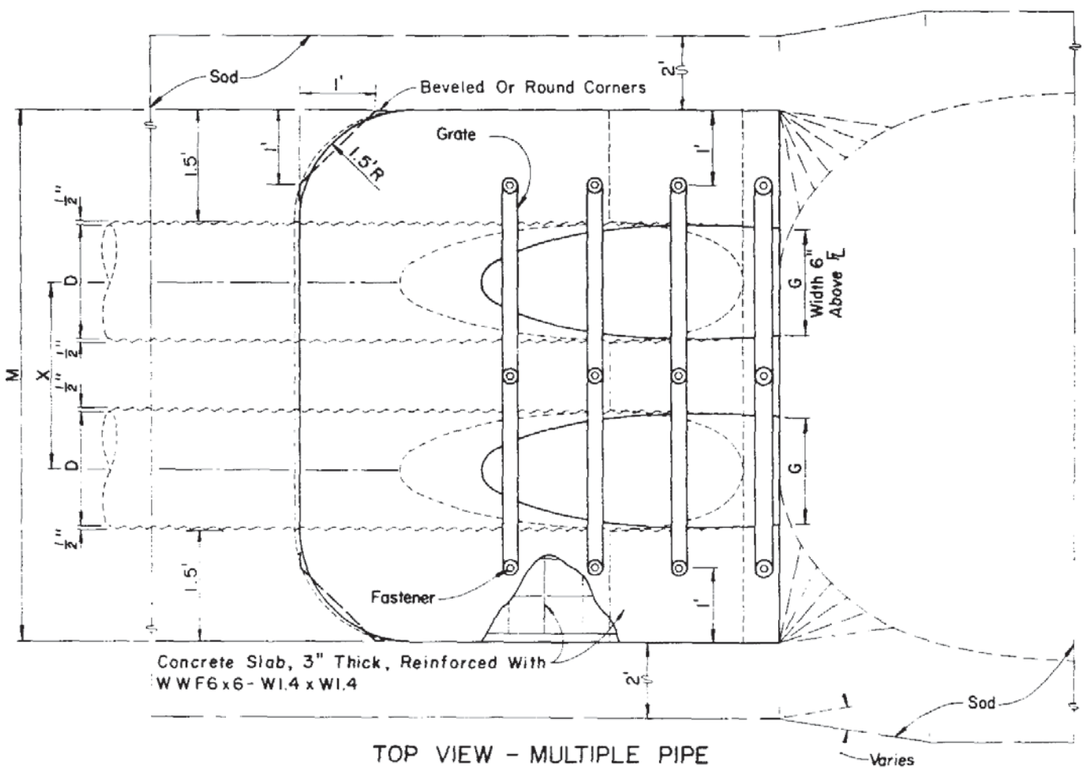

TOP VIEW - MULTIPLE PIPE

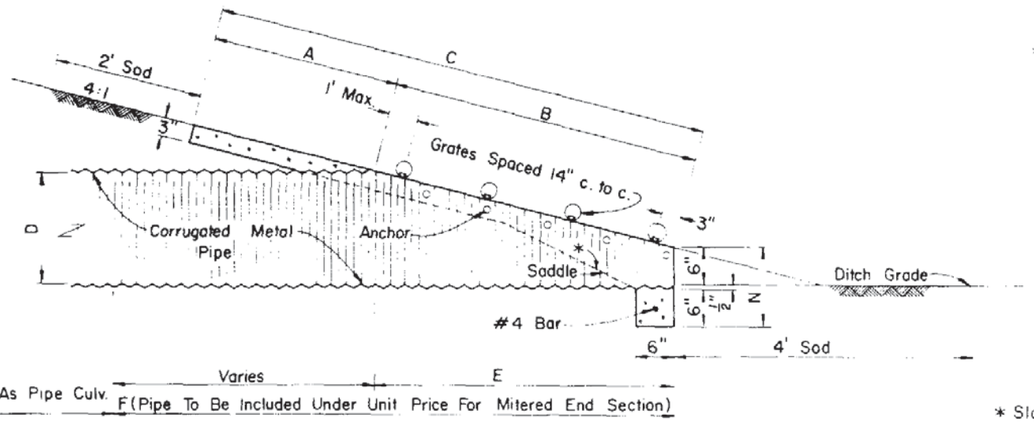

SECTION

* Slope:
To ℄ Pipe For Pipe 18" And Smaller
2:1 For Pipe 24" And Larger

Note:
See Sheet 5 for details and Sheet 6 for notes.

STATE OF FLORIDA DEPARTMENT OF TRANSPORTATION
ROAD DESIGN

SIDE DRAIN
MITERED END SECTION
SINGLE AND MULTIPLE ROUND CORRUGATED METAL PIPE

	Names	Dates
Designed By	E G R	8/77
Drawn By	H K H	8/77
Checked By	J V G	8/77
F.H.W.A.	Approved	10/21/77

Approved By
Deputy Design Engineer, Roadways

Revision No.	Sheet No.	Index No.
86	2 of 6	273

DIMENSIONS & QUANTITIES

1974 AASHTO		X	A	B	C	E	F	G	M				N	GRATE SIZES		CONCRETE (Cu Yds.)				SODDING (Sq. Yds.)			
Span	Rise								Single Pipe	Double Pipe	Triple Pipe	Quad. Pipe		Standard Weight Pipe	Extra Strong Pipe	Single Pipe	Double Pipe	Triple Pipe	Quad. Pipe	Single Pipe	Double Pipe	Triple Pipe	Quad. Pipe
17"	13"	2'-6"	2.5'	2.41'	4.91'	2.33'	7'	1.39'	4.50'	7.00'	9.50'	12.00'	1.04'			.28	.42	.56	.70	8	10	11	13
21"	15"	2'-10"	2.5'	3.09'	5.59'	3.00'	8'	1.76'	4.83'	7.67'	10.50'	13.33'	1.04'			.32	.49	.66	.78	9	11	12	14
28"	20"	3'-5"	2.5'	4.81'	7.31'	4.67'	9'	2.22'	5.42'	8.83'	12.25'	15.67'	1.04'			.40	.60	.82	1.03	10	12	14	17
35"	24"	4'-0"	2.5'	6.18'	8.68'	6.00'	11'	2.55'	6.00'	10.00'	14.00'	18.00'	1.04'	2 ½"	3"	.49	.77	1.05	1.33	11	14	16	19
42"	29"	4'-9"	2.5'	7.90'	10.40'	7.67'	12'	2.97'	6.58'	11.33'	16.08'	20.83'	1.04'	2 ½"	3 ½"	.57	.92	1.27	1.62	12	15	18	21
49"	33"	5'-6"	2.5'	9.28'	11.78'	9.00'	14'	3.34'	7.17'	12.67'	18.17'	23.67'	1.04'	2 ½"	3 ½"	.65	1.08	1.50	1.93	13	17	20	24
57"	38"	6'-4"	2.5'	11.00'	13.50'	10.67'	16'	3.65'	7.83'	14.17'	20.50'	26.83'	1.04'	3"	4"	.76	1.30	1.83	2.37	14	18	23	27
64"	43"	7'-1"	2.5'	12.71'	15.21'	12.33'	17'	3.89'	8.42'	15.50'	22.58'	29.67'	1.04'	3"	4"	.87	1.55	2.18	2.83	15	20	25	30
71"	47"	7'-10"	2.5'	14.09'	16.59'	13.67'	19'	4.14'	9.00'	16.83'	24.67'	32.50'	1.04'	3"	4"	.95	1.68	2.43	3.17	16	22	27	32

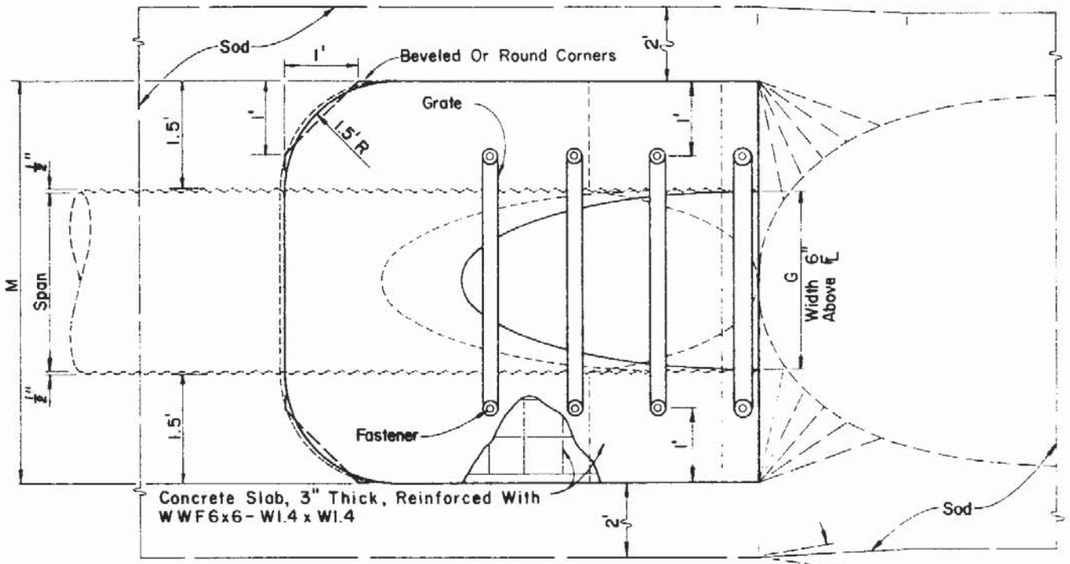

TOP VIEW - SINGLE PIPE

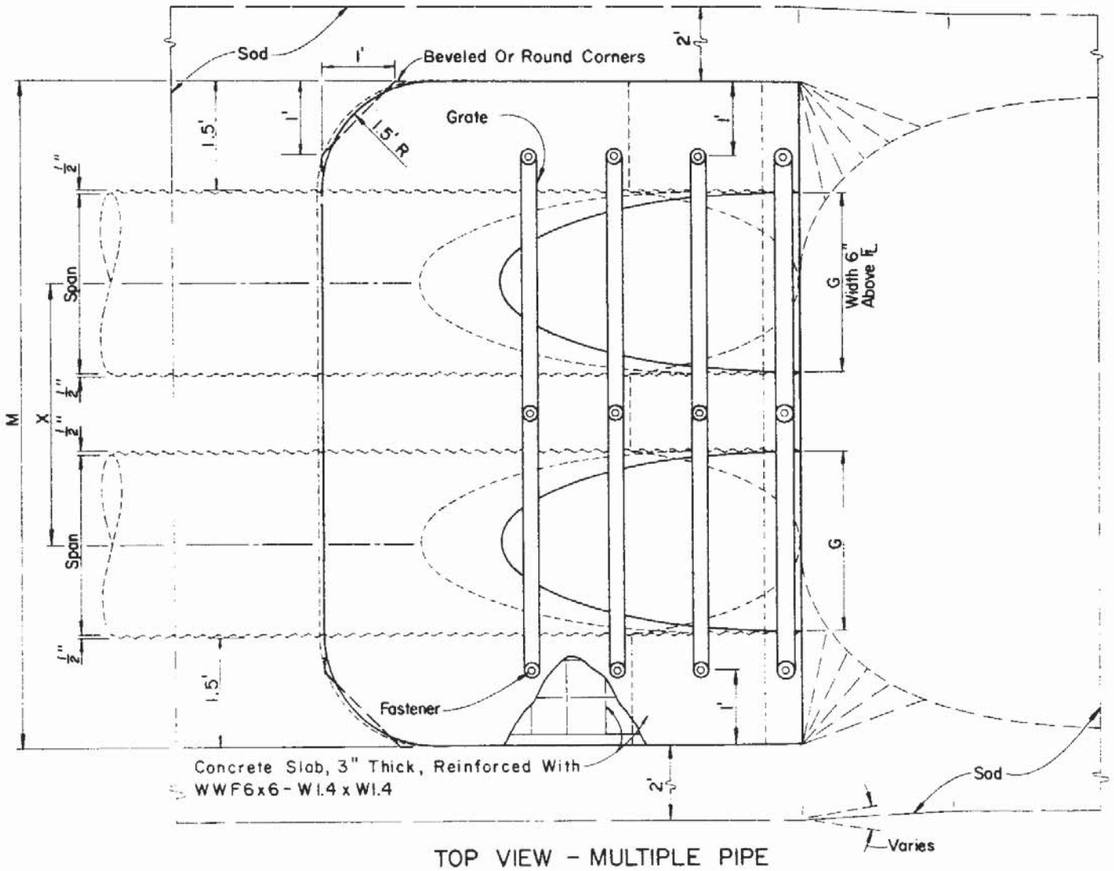

TOP VIEW - MULTIPLE PIPE

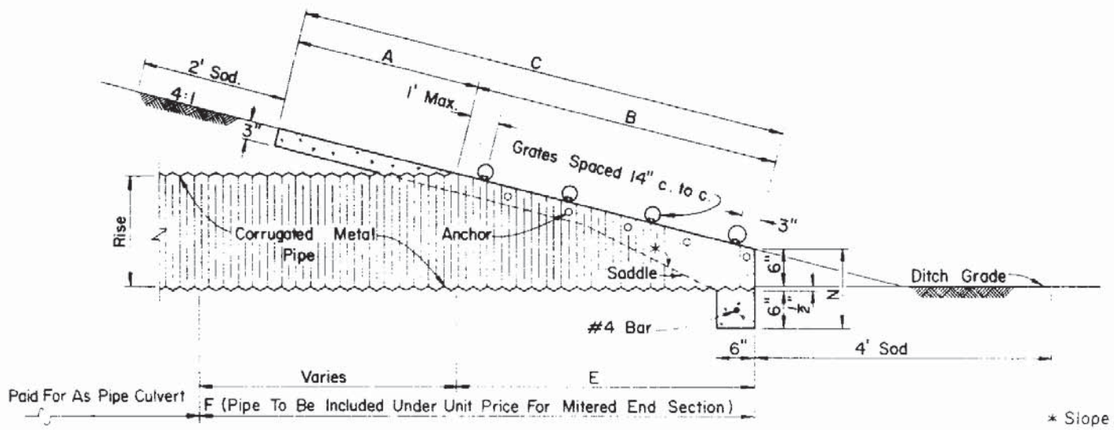

SECTION

Note:

See Sheet 5 for details and Sheet 6 for notes.

* Slope:

To Span Line For Pipe Arch 28"x 20" And Smaller
2:1 For Pipe Arch 35"x 24" And Larger

STATE OF FLORIDA DEPARTMENT OF TRANSPORTATION
ROAD DESIGN

SIDE DRAIN MITERED END SECTION

SINGLE AND MULTIPLE CORRUGATED METAL PIPE-ARCH

	Names	Dates
Designed by	EGR	8/77
Drawn by	HKH	8/77
Checked by	JVG	8/77
F.H.W.A. Approved		12/21/77

Approved By: Deputy Design Engineer, Roadways

Revision No.	Sheet No.	Index No.
86	3 of 6	273

DIMENSIONS & QUANTITIES

Rise R	Span S	X	A	B	C	E	F	G	M				N	GRATE SIZES		CONCRETE (Cu. Yds.)				SODDING (Sq. Yds.)			
									Single Pipe	Double Pipe	Triple Pipe	Quad. Pipe		Standard Weight Pipe	Extra Strong Pipe	Single Pipe	Double Pipe	Triple Pipe	Quad. Pipe	Single Pipe	Double Pipe	Triple Pipe	Quad. Pipe
12"	18"	2'-10"	2.36'	3.06'	5.42'	3.03'	5'	1.50'	4.92'	7.75'	10.58'	13.42'	1.21'			0.30	0.45	0.61	0.76	9	11	12	14
14"	23"	3'-4"	2.44'	3.75'	6.19'	3.70'	6'	1.90'	5.38'	8.71'	12.04'	15.38'	1.23'			0.36	0.56	0.76	0.95	9	12	14	16
19"	30"	4'-0"	2.62'	5.47'	8.09'	5.36'	8'	2.37'	6.04'	10.04'	14.04'	18.04'	1.27'	2½"	3"	0.51	0.79	1.08	1.36	11	13	16	19
24"	38"	5'-0"	2.79'	7.18'	9.97'	7.03'	10'	2.85'	6.79'	11.79'	16.79'	21.79'	1.31'	2½"	3"	0.68	1.10	1.53	1.96	12	15	19	22
29"	45"	5'-11"	3.05'	8.90'	11.95'	8.70'	12'	3.19'	7.50'	13.42'	19.33'	25.25'	1.38'	2½"	3½"	0.86	1.45	2.04	2.63	13	17	21	25
34"	53"	7'-0"	3.22'	10.62'	13.84'	10.36'	13'	3.57'	8.25'	15.25'	22.25'	29.25'	1.42'	3"	3½"	1.02	1.81	2.60	3.39	15	19	24	29
38"	60"	7'-10"	3.39'	11.99'	15.38'	11.70'	15'	3.95'	8.92'	16.75'	24.58'	32.42'	1.46'	3"	4"	1.18	2.14	3.10	4.05	16	21	26	31
43"	68"	8'-11"	3.56'	13.71'	17.27'	13.36'	17'	4.28'	9.67'	18.58'	27.50'	36.42'	1.50'	3"	4"	1.38	2.58	3.79	4.99	17	23	29	35
48"	76"	9'-11"	3.73'	15.43'	19.16'	15.03'	19'	4.59'	10.42'	20.33'	30.25'	40.17'	1.54'	Special	Special	1.59	3.05	4.51	5.97	18	25	32	38
53"	83"	10'-8"	3.91'	17.15'	21.06'	16.70'	20'	4.77'	11.08'	21.75'	32.42'	43.08'	1.58'	Special	Special	1.80	3.50	5.19	6.88	20	27	34	41
58"	91"	11'-8"	4.08'	18.87'	22.95'	18.36'	22'	5.01'	11.83'	23.50'	35.17'	46.83'	1.63'	Special	Special	2.04	4.04	6.05	8.05	21	29	37	44

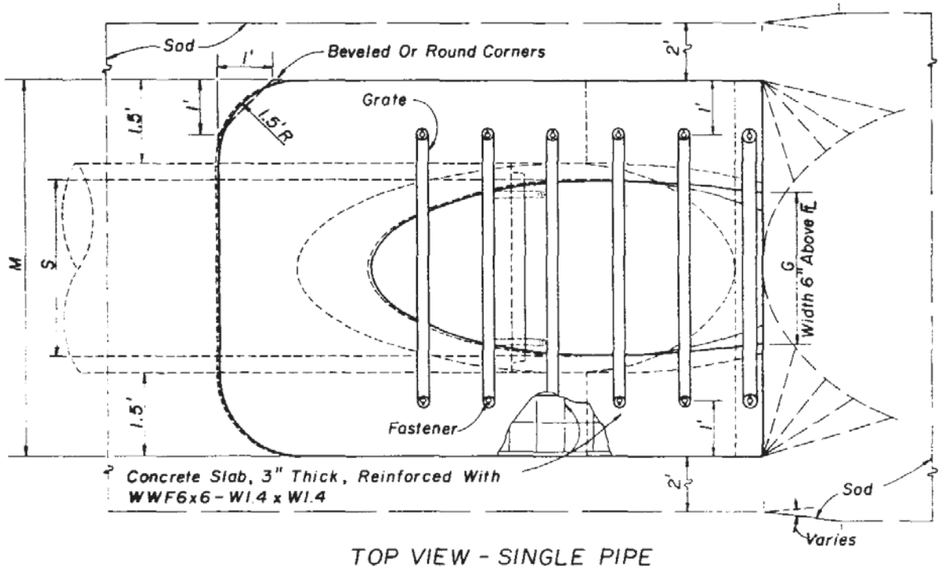

TOP VIEW - SINGLE PIPE

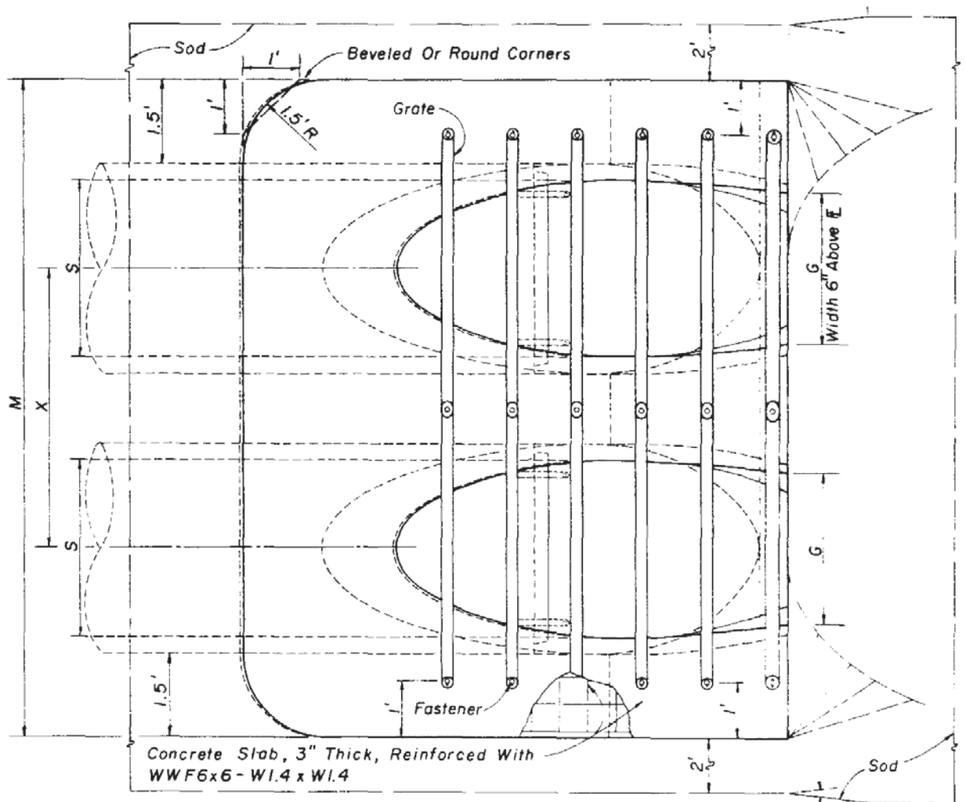

TOP VIEW - MULTIPLE PIPE

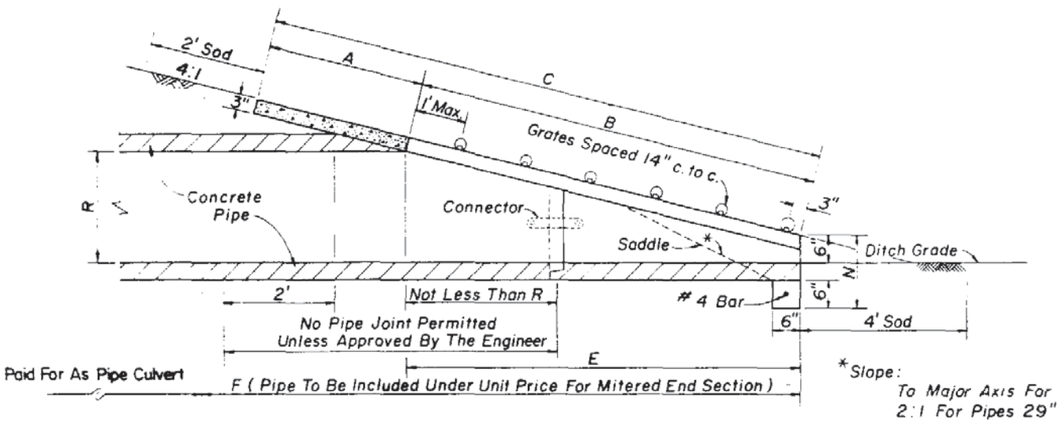

SECTION

*Slope:
To Major Axis For Pipes 24" x 38" And Smaller.
2:1 For Pipes 29" x 45" And Larger.

Note:
See Sheet 5 for details and Sheet 6 for notes.

STATE OF FLORIDA DEPARTMENT OF TRANSPORTATION
ROAD DESIGN

SIDE DRAIN MITERED END SECTION

SINGLE AND MULTIPLE ELLIPTICAL CONCRETE PIPE

	Names	Dates
Designed by	EGR	6/81
Drawn by	HSD	6/81
Checked by	JVG/JBW	6/81
F.H.W.A. Approved:		10/8/81

Approved By: Deputy Design Engineer Roadways

Revision No.	Sheet No.	Index No.
86	4 of 6	273

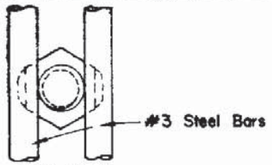

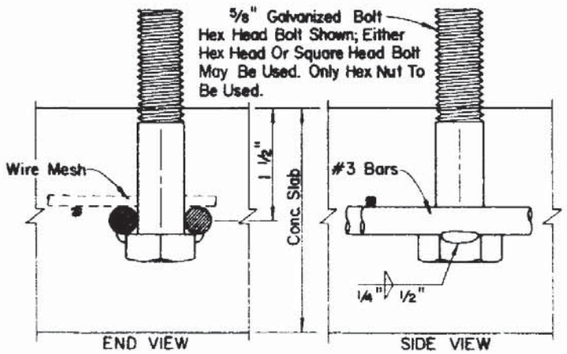

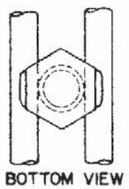

The specified weld shall be made when the fabricated unit is subject to hazardous hauls and repeated handling. Tack welds are permitted for local or job site fabrication. Galvanizing over welded surface not required.

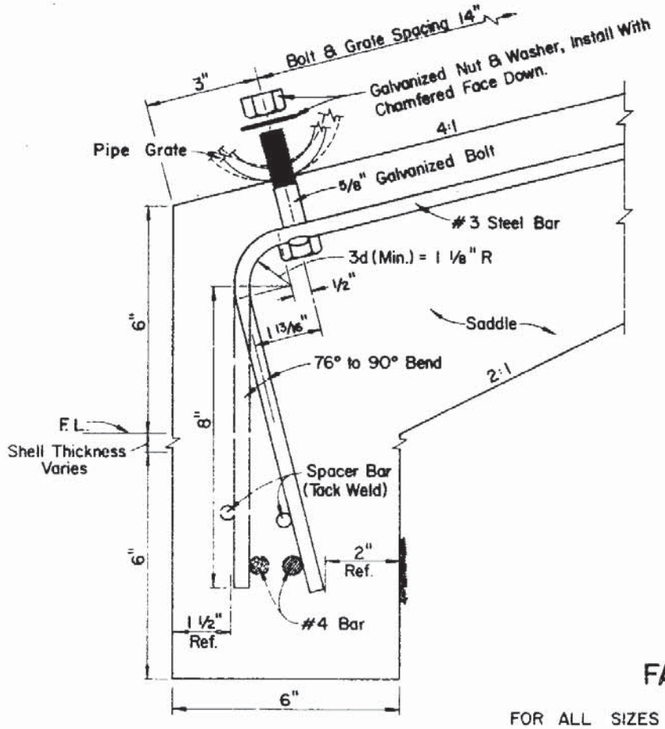

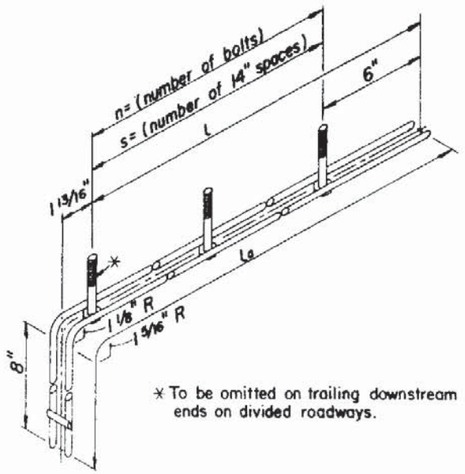

* To be omitted on trailing downstream ends on divided roadways.

Drain Size	s	n	L	La
CONCRETE PIPE (ROUND)				
15"	3	4	4'-0"	4'-11"
18"	4	5	5'-2"	6'-1"
24"	6	7	7'-6"	8'-5"
30"	7	8	8'-8"	9'-7"
36"	9	10	11'-0"	11'-11"
42"	11	12	13'-4"	14'-3"
48"	13	14	15'-8"	16'-7"
54"	14	15	16'-10"	17'-9"
60"	16	17	19'-2"	20'-1"
CORRUGATED METAL PIPE (ROUND)				
15"	2	3	2'-10"	3'-9"
18"	3	4	4'-0"	4'-11"
24"	5	6	6'-4"	7'-3"
30"	7	8	8'-8"	9'-7"
36"	8	9	9'-10"	10'-9"
42"	10	11	12'-2"	13'-1"
48"	12	13	14'-6"	15'-5"
54"	14	15	16'-10"	17'-9"
60"	15	16	18'-0"	18'-11"
CORRUGATED METAL PIPE (ARCH) ***				
17"x13"	1	2	1'-8"	2'-7"
21"x15"	2	3	2'-10"	3'-9"
28"x20"	4	5	5'-2"	6'-1"
35"x24"	5	6	6'-4"	7'-3"
42"x29"	6	7	7'-6"	8'-5"
49"x33"	7	8	8'-8"	9'-7"
57"x38"	9	10	11'-0"	11'-11"
64"x43"	10	11	12'-2"	13'-1"
71"x47"	12	13	14'-6"	15'-5"

**

Drain Size	s	n	L	La
ELLIPTICAL CONCRETE PIPE				
12"x18"	2	3	2'-10"	3'-9"
14"x23"	3	4	4'-0"	4'-11"
19"x30"	4	5	5'-2"	6'-1"
24"x38"	5	6	6'-4"	7'-3"
29"x45"	7	8	8'-8"	9'-7"
34"x53"	8	9	9'-10"	10'-9"
38"x60"	10	11	12'-2"	13'-1"
43"x68"	11	12	13'-4"	14'-3"
48"x76"	13	14	15'-8"	16'-7"
53"x83"	14	15	16'-10"	17'-9"
58"x91"	15	16	18'-0"	18'-11"

**

Note: 5/8" x 3" bolts are standard for all grate fasteners, except when the contractor elects to use the slotted upper holes for the intermediate fasteners on multiple drain pipe, which will require the following bolt lengths:

Grate Size (Std. & X-Stg.)	Bolt Length
2 1/2"	5 1/2"
3"	6"
3 1/2"	6 1/2"
4"	7"

FASTENER UNIT

FOR ALL SIZES OF SINGLE AND MULTIPLE DRAIN PIPE

** To be used only when grates are called for in the plans.
*** 1974 AASHTO Pipe Arch Sizes.

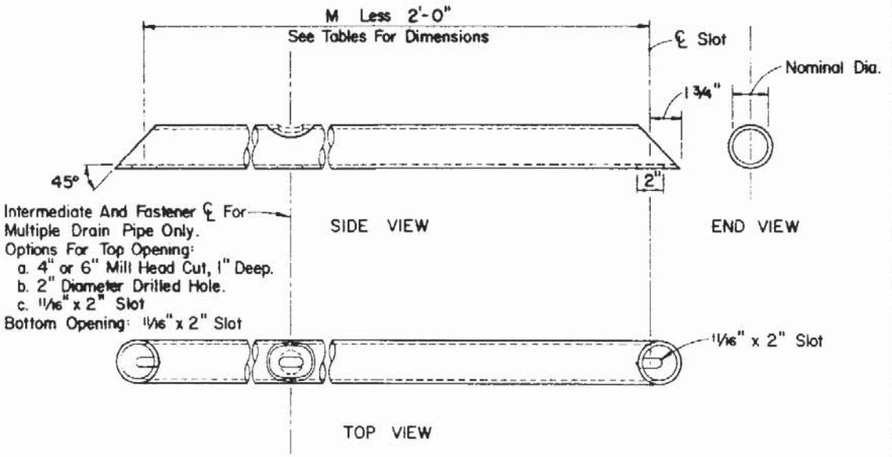

See General Notes, Sheet 6.

GRATE DETAIL

FOR SINGLE & MULTIPLE DRAIN PIPE

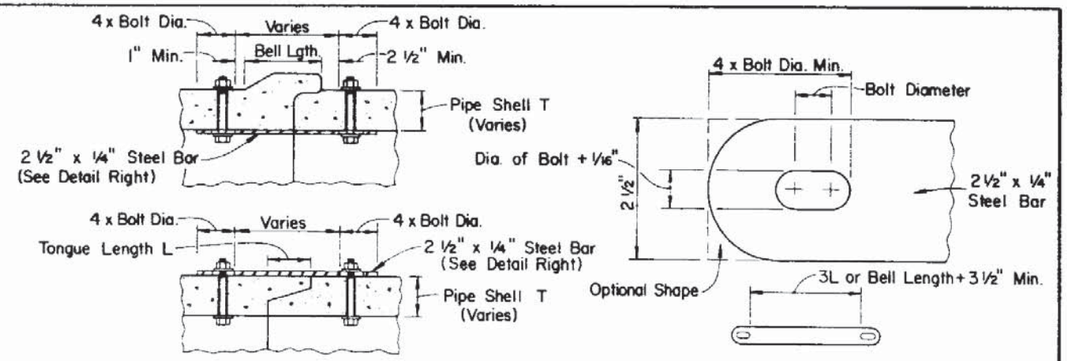

All bars, bolts, nuts and washers are to be galvanized steel.
Bolt diameters shall be 3/8" for 15" to 36" pipe and 5/8" for 42" to 60" pipe.
Two connectors required per joint, located 60° right and left of bottom center of pipe.
Bolt holes in pipe shell are to be drilled.

CONCRETE PIPE CONNECTOR DETAIL

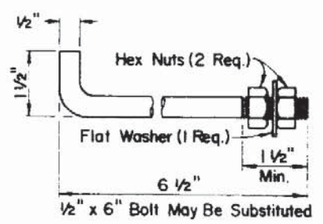

Anchors required for CMP only.
Anchor, washer and nuts to be galvanized steel.
Bend anchor where required to center in concrete slab. Damaged surfaces to be repaired after bending.
Anchors are to be spaced a distance equal to four (4) corrugations. Place the anchors in the outside crest of corrugation.
Flat washer to be placed on inside wall of pipe.

ANCHOR DETAIL

STATE OF ILLINOIS DEPARTMENT OF TRANSPORTATION
BDAL DESIGN

SIDE DRAIN MITERED END SECTION

DETAILS FOR CONCRETE & CORRUGATED METAL PIPE

	Name	Date
Designed By	EGR	8/77
Drawn By	HKH	8/77
Checked By	JVG	8/77
F.H.W.A. Approved		10/21/77

Approved By: Deputy Design Engineer, Roadways

Revision No.	Sheet No.	Index No.
82	5 of 6	273

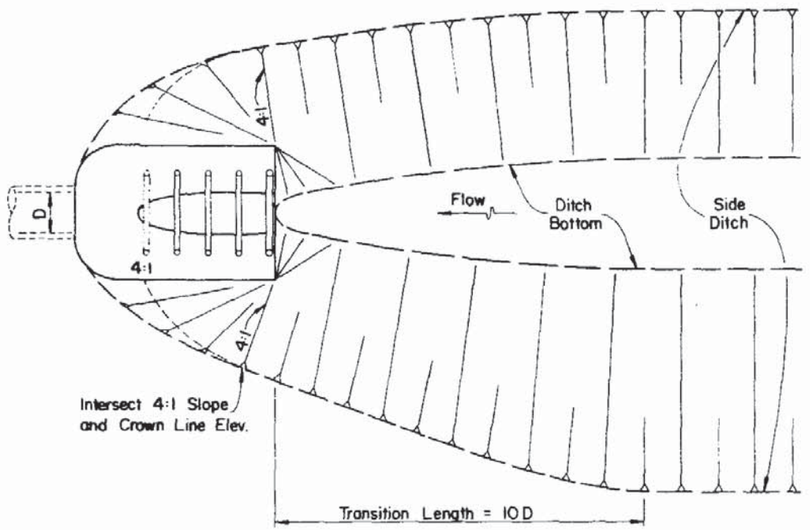

PLAN

DITCH TRANSITION

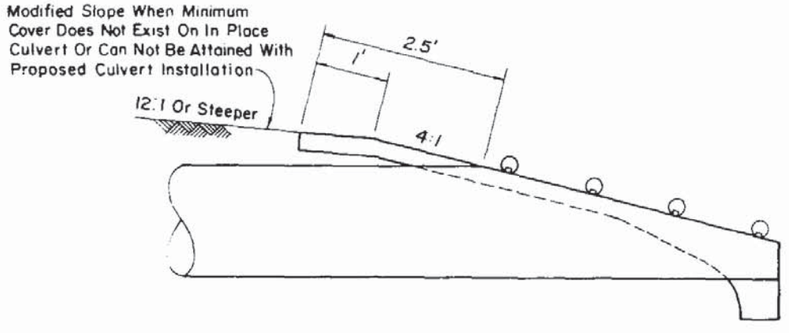

PERMISSIBLE PAVEMENT MODIFICATION FOR CLASS I TURNOUTS

GENERAL NOTES

1. Mitered end sections shall be paid for at the contract unit price for mitered end section, each, based on each independent pipe end.
2. The cost of all pipe(s), grates, fasteners, reinforcing, connectors, anchors, concrete, sealants, jackets and coupling bands shall be included in the contract unit price for mitered end section, each. Sodding not included.
3. The reinforced concrete slab shall be constructed for all sizes of side drain pipe and cast in place with Class I concrete.
4. Round pipe size 30" or greater, pipe-arch size 35" x 24" or greater and elliptical pipe 19" x 30" or greater shall be grated unless excepted in the plans. Smaller sizes of pipe shall be grated only when called for in plans. The lower grate on trailing downstream ends on divided highways shall be omitted.
5. Grates are to be fabricated from steel ASTM A 53, Grade B, pipe. The lower grate on all traffic approach ends shall be Schedule 80 and all remaining grates shall be Schedule 40.
   Grates subject to salt free and corrosive free environment may be fabricated from galvanized pipe, with base metal exposed during fabrication repaired as specified in Section 562, Standard Specifications; or, fabricated from black pipe and hot dipped galvanized after fabrication in accordance with ASTM A 123.
   Grates subject to salt water or highly corrosive environment shall be hot dipped galvanized after fabrication in accordance with ASTM A 123.
6. Concrete pipe used in the assembly of mitered end sections shall be of selective lengths to avoid excessive connections.
7. Corrugated metal pipe galvanizing that is damaged during beveling and perforating for mitered end section shall be repaired.
8. That portion of corrugated metal pipe in direct contact with the concrete slab shall be bituminous coated prior to placing of the concrete.
9. Unless otherwise designated in the plans, concrete pipe mitered end sections may be used with any type of side drain pipe; corrugated steel pipe mitered end sections may be used with any type of side drain pipe except aluminum pipe; and, corrugated aluminum mitered end sections may be used with any type of side drain pipe except steel pipe. When bituminous coated metal pipe is specified for side drain pipe, mitered end sections shall be constructed with like pipe or concrete pipe. When the mitered end section pipe is dissimilar to the side drain pipe, a concrete jacket shall be constructed in accordance with Index No. 280.
10. Corrugated polyethylene pipe (CPE) for sidedrain application of 15", 18" or 24" diameter shall utilize either corrugated metal or concrete mitered end sections. When used in conjunction with corrugated metal mitered end sections, connection shall be by either a formed metal band specifically designated to join CPE pipe and metal pipe or other coupler approved by the Engineer of Drainage. When used in conjunction with a concrete mitered end section, connection shall be by concrete jacket constructed in accordance with Index No. 280.
11. When existing multiple side drain pipes are spaced other than the dimensions shown in this detail, or have non-parallel axes, or have non-uniform sections, the mitered end sections will be constructed either separately as single pipe mitered end sections or collectively as multiple pipe end sections as directed by the Engineer; however, mitered end sections will be paid for each, based on each independent pipe end.
12. In addition to the requirements of Section 430-4, sidedrain culverts shall comply with the bedding and backfill requirements shown on Index No. 280.
13. Ditch transitions shall be used on all grades in excess of 3% as directed by the Engineer.
14. The project engineer shall contact the District Drainage Engineer for possible alternate treatment prior to constructing sidedrain mitered end sections where a minimum spacing of 30' will not result between the toe points of the mitered end sections.

DESIGN NOTES

1. In critical hydraulic locations, grates shall not be used until potential debris transport has been evaluated by the drainage engineer and appropriate adjustments made. Ditch grades in excess of 3% or pipe with less than 1.5' of cover and grades in excess of 1% will require such an evaluation (General Note 4).
2. The design engineer shall determine highly corrosive locations and specify in the plans when the grates shall be hot-dipped galvanized after fabrication (General Note 5).
3. The design engineer shall determine and designate in the plans which alternate types of mitered end section will not be permitted. The restriction shall be based on corrosive or structural requirements.

STATE OF FLORIDA DEPARTMENT OF TRANSPORTATION
ROAD DESIGN

SIDE DRAIN MITERED END SECTION
NOTES & INFORMATION

	Names	Dates
Designed by	EGR	8/77
Drawn by	HKH	8/77
Checked by	JVG	8/77
Final Approved		10/21/77

Approved By: Deputy Design Engineer, Roadways

Revision No.	Sheet No.	Index No.
86	6 of 6	273



SECTION DD

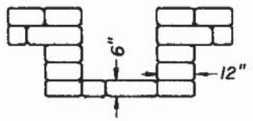

SECTION CC

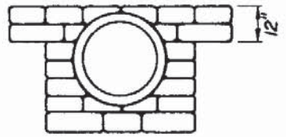

SECTION BB

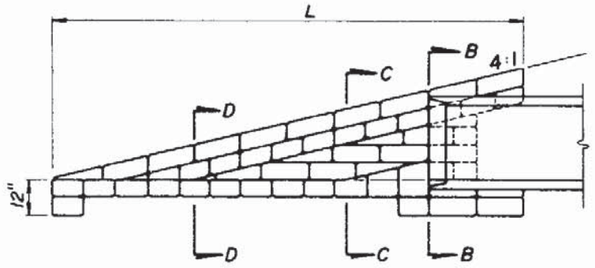

SECTION AA

ESTIMATED QUANTITIES & DIMENSIONS					
PIPE SIZE	L CMP	L Conc. Pipe	SAND-CEMENT RIPRAP (Cu. Yd.)	Bags (Jute)	SOD (Sq. Yd.)
15"	8'-2"	8'-9"	2.2	90	8.40
18"	9'-2"	9'-10"	2.5	100	9.10
24"	11'-2"	12'-0"	3.5	140	10.40

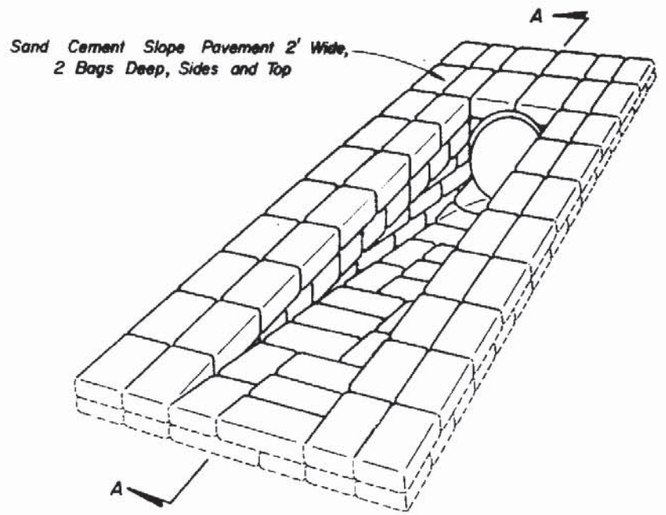

PICTORIAL VIEW

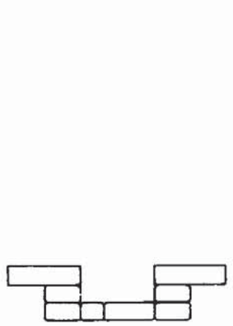

SECTION DD

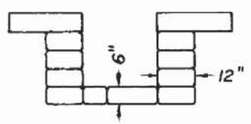

SECTION CC

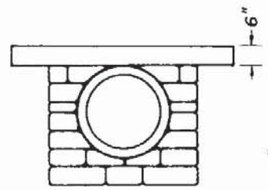

SECTION BB

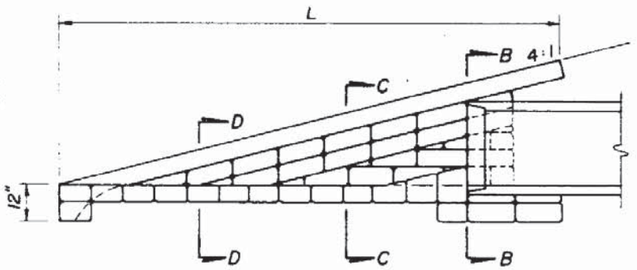

SECTION AA

ESTIMATED QUANTITIES & DIMENSIONS						
PIPE SIZE	L CMP	L Conc. Pipe	SAND-CEMENT RIPRAP (Cu. Yd.)	Bags (Jute)	CONCRETE (Cu. Yd.)	SOD (Sq. Yd.)
15"	8'-2"	8'-9"	1.0	40	0.78	9
18"	9'-2"	9'-10"	1.4	60	0.89	10
24"	11'-2"	12'-0"	2.0	80	1.08	11

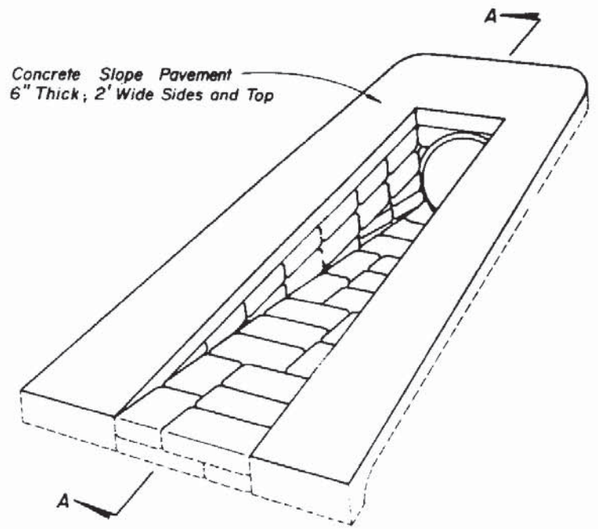

PICTORIAL VIEW

GENERAL NOTE

1. Details for concrete and round corrugated metal pipe, concrete pipe shown.
2. Sod slopes 2' each side and top and ditch 4' beyond toe.
3. These mitered end sections are intended for side drain installations by FDOT Maintenance forces and for side drain installations constructed under FDOT Maintenance permit.

STATE OF FLORIDA DEPARTMENT OF TRANSPORTATION
ROAD DESIGN

SIDE DRAIN MITERED END SECTION

SINGLE ROUND CONCRETE & CORRUGATED METAL PIPE

	Names	Dates
Designed by	EGR	10/77
Drawn by	HKH	10/77
Checked by	JVG	10/77
F H W A Approved		10/23/78

Approved By
Deputy Design Engineer, Roadways

Revision No.	Sheet No.	Index No.
86	1 of 1	274

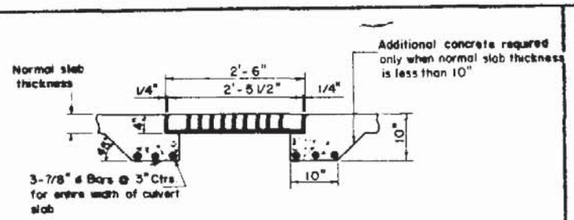

SECTION B B

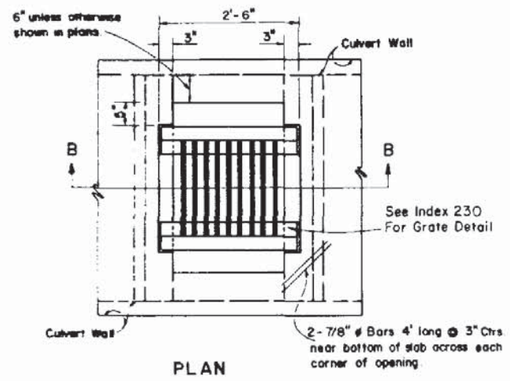

PLAN

INLET TYPE A GRATE

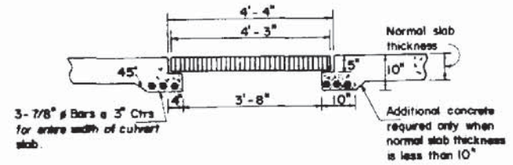

SECTION CC

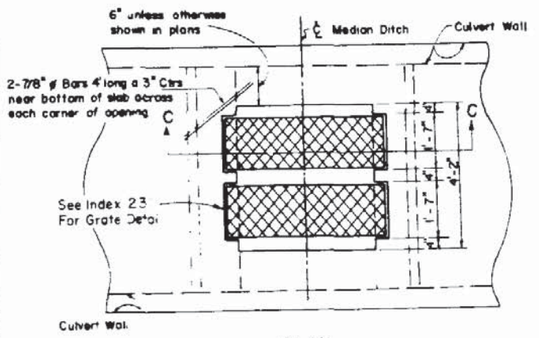

PLAN

INLET TYPE B GRATE

INLET IN TOP OF BOX CULVERT

NOTE:
1. Cost of Steel Grating to be included in cost of Box Culvert
2. All steel shall be 1 1/4" clear

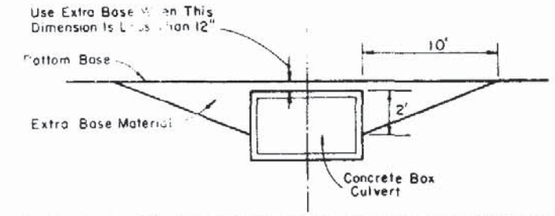

NOTE: Extra base is required when cross box culverts are located on facilities subject to high speed traffic (>45 mph) or high traffic volumes (>1600 ADT) and the cover is within the range specified in the notation above.

Extra base material to be paid for as equivalent square yard base, except when material is called for on cubic yard or tonnage basis.

EXTRA BASE FOR CROSS BOX CULVERTS UNDER FLEXIBLE PAVEMENT

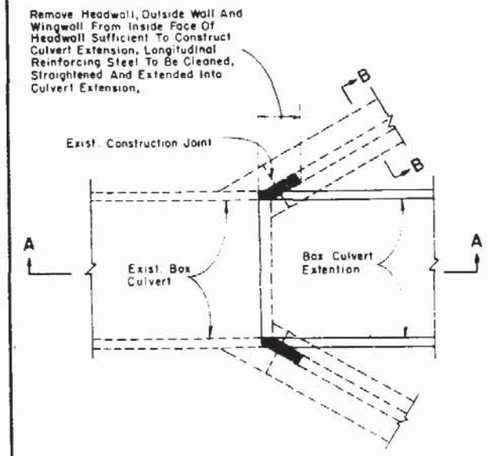

PLAN

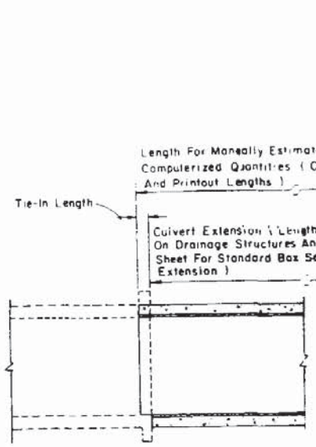

SECTION AA

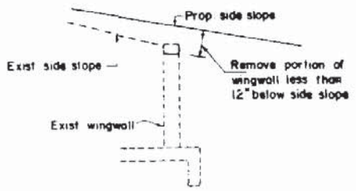

SECTION B B

FLARED ENDWALL

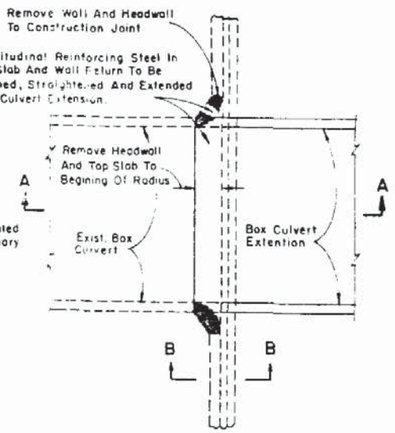

PLAN

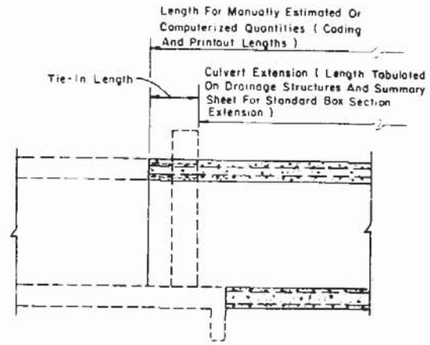

SECTION AA

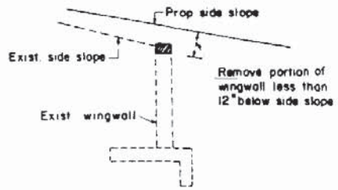

SECTION B B

STRAIGHT ENDWALL

NOTE Cost for removal and disposal of material from existing headwall, wingwall and top slab, and cost of cleaning, straightening and extending longitudinal reinforcing steel shall be included in the contract unit prices for Class II Concrete (Culverts) CY and Reinforcing Steel (Roadway) LB

CONNECTION DETAILS FOR CONCRETE BOX CULVERT EXTENSIONS

STATE OF FLORIDA DEPARTMENT OF TRANSPORTATION
ROAD DESIGN

MISCELLANEOUS DRAINAGE DETAILS

	Names	Dates
Designed By		
Drawn By		
Checked By		

F.H.W.A. Approved: 11/16/78

Approved By: Deputy Design Engineer, Roadways

Revision No.	Sheet No.	Index No.
85	1 of 3	280

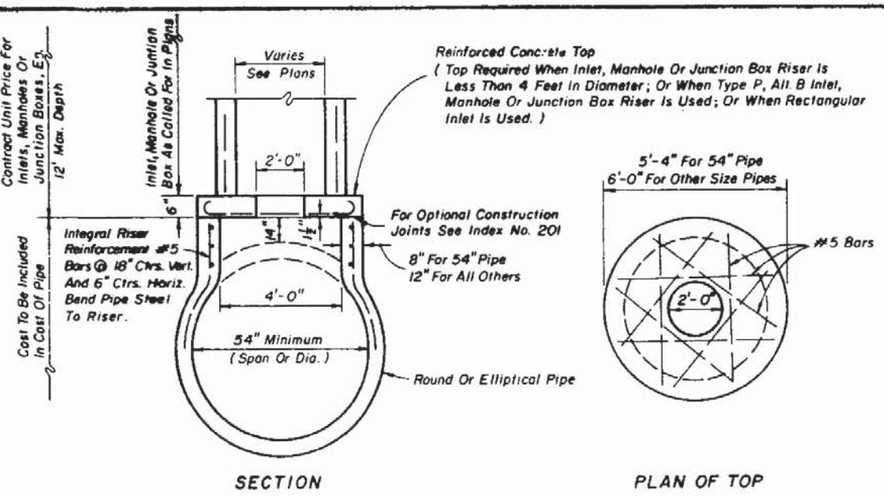

INLETS, MANHOLES OR JUNCTION BOXES ON INTEGRAL PRECAST CONCRETE RISER FOR CONCRETE PIPE

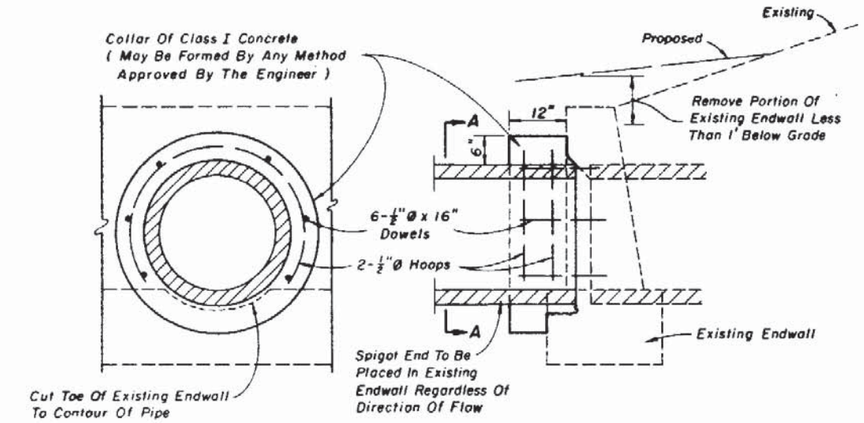

Note Cost for removal and disposal of portions of top and toe of existing endwall and cost of concrete, reinforcing steel and construction of collar to be included in the contract unit price for pipe culvert.

CONCRETE COLLAR FOR EXTENSION OF EXISTING PIPE CULVERTS

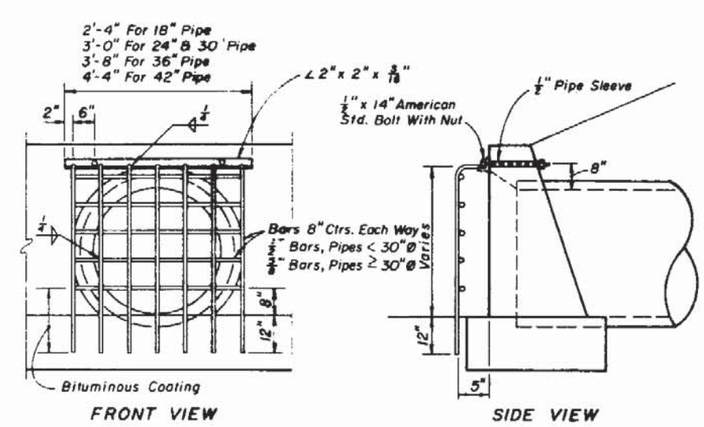

Pipe Dia.	18"	24"	30"	36"	42"
Grate (Lbs.)	19	26	42	57	76

Notes: Guards to be constructed only at locations specifically called for in plans. Cost of guard, bolts, nuts and sleeves to be included in the contract unit price for concrete (new construction) or as Endwall Grate, LB. (existing endwall).

GUARD AT PIPE ENDS

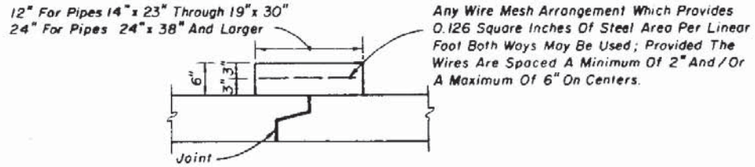

CONCRETE JACKET

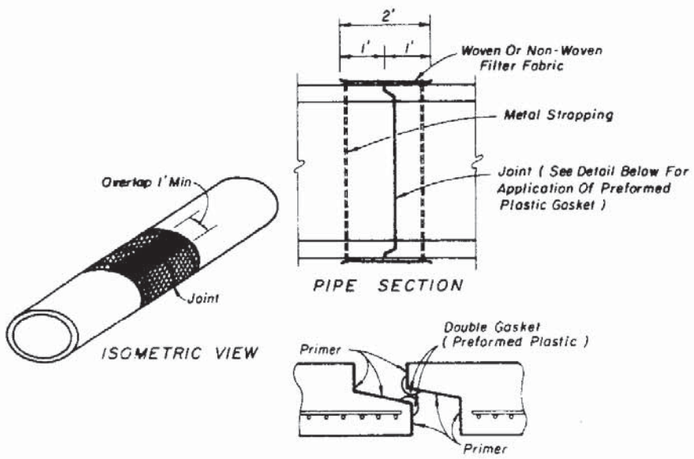

FILTER FABRIC JACKET

Cost of concrete jacket and filter fabric jacket to be included in cost of elliptical concrete pipe culverts.

ELLIPTICAL CONCRETE PIPE JOINTS

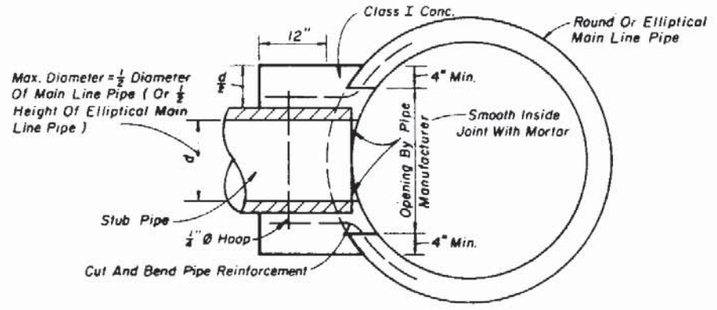

Cost of concrete and steel to be included in contract unit price for pipe culvert

CONCRETE COLLAR FOR JOINING MAINLINE PIPE AND STUB PIPE

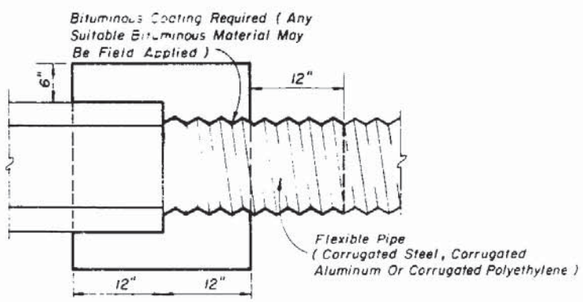

Note: Cost of concrete and bituminous coating to be included in contract unit price for either new pipe or Mitered End Section.

A concrete jacket shall not be used to join:
(a) metal pipe of dissimilar materials
(b) flexible pipe when the minimum cover required in accordance with Index No. 205 cannot be obtained.

CONCRETE JACKET FOR CONNECTING DISSIMILAR TYPES OF PIPE AND CONCRETE PIPES WITH DISSIMILAR JOINTS

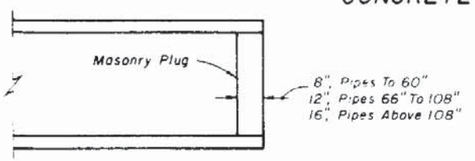

Note: Unless otherwise called for in the plans, the cost of plugging pipes to be included in contract unit price for new pipe.

PIPE PLUG

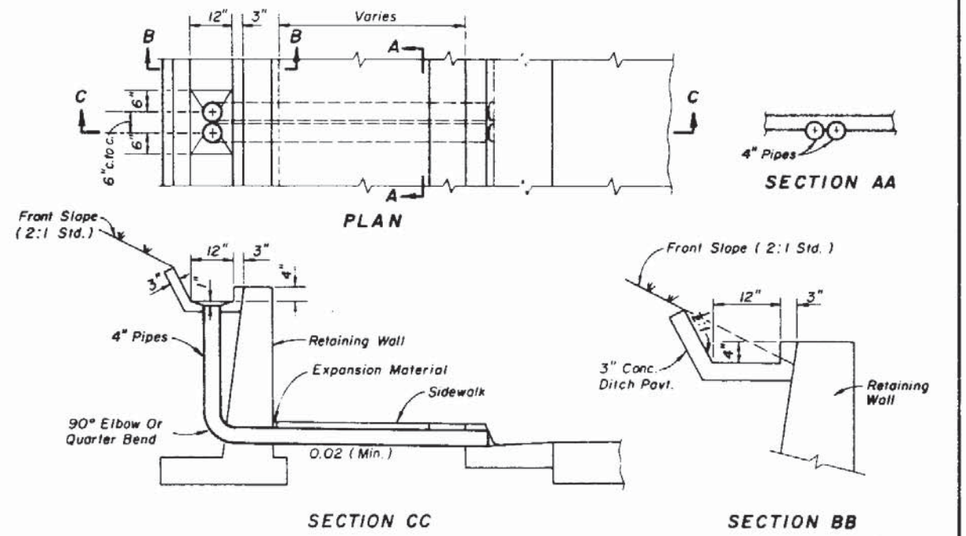

Note: Either cast iron pipe or PVC pipe, Schedule 40, may be used. Pipe to be paid for under the contract unit price for either Cast Iron Pipe Culvert (Standard) (4"), L.F. or Polyvinyl Chloride Pipe Culvert (4"), L.F.

CONCRETE GUTTER AND DRAINS AT RETAINING WALLS

STATE OF FLORIDA DEPARTMENT OF TRANSPORTATION
ROAD DESIGN

MISCELLANEOUS DRAINAGE DETAILS

	Names	Dates
Designed by		
Drawn by	HSG	1/85
Checked by	JBW/JVG	9/85
F.H.W.A. Approved:		

Approved By
Deputy Design Engineer Roadways

Revision No.	Sheet No.	Index No.
86	2 of 3	280

SCHEDULE OF BELL REINFORCEMENT

Classes - III, IV, V; Wall- A,B,C

Nominal Pipe Diameter	Design Bell Reinforcement	Maximum Reinforcement Under Tolerance
	SQUARE INCHES	SQUARE INCHES
15"	0.12	0.010
18"	0.16	0.010
24"	0.20	0.010
30"	0.24	0.010
36"	0.28	0.010
42"	0.32	0.010
48"	0.36	0.011
54"	0.40	0.012
60"	0.45	0.0135
66"	0.50	0.015
72"	0.55	0.0165
78"	0.60	0.018
84"	0.65	0.0195
90"	0.70	0.021
96"	0.75	0.0225
102"	0.80	0.024
108"	0.85	0.0255

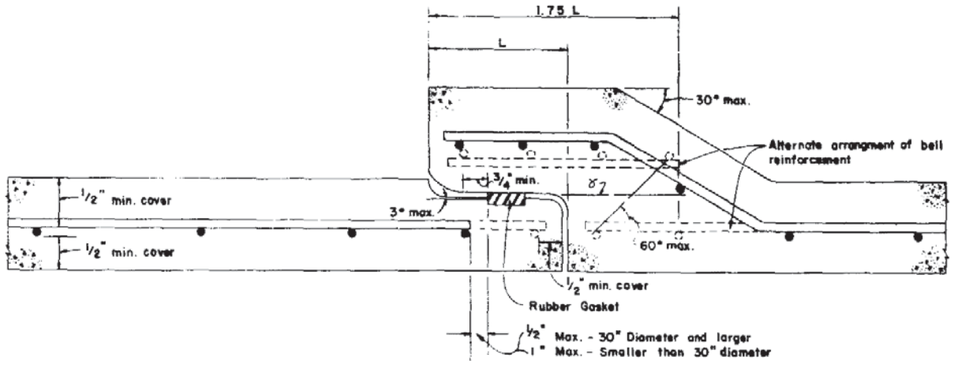

δ All circumferential steel located above this line within 1.75 L is defined as bell rainforcement.

DETAIL OF BELL & SPIGOT CONCRETE PIPE JOINT USING ROUND RUBBER GASKET

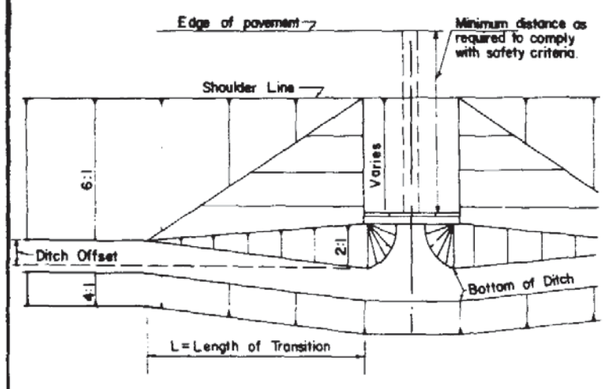

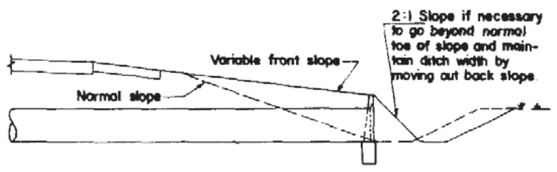

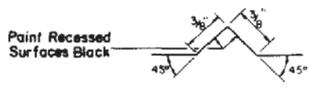

SECTION THRU RECESSED "V" GROOVE TO FORM INSCRIBED FIGURES

The number is to be placed in the center of the top surface of all BRIDGE CULVERT headwalls.
Black Plastic Figures 3" in height as approved by the Engineer may be used in lieu of Figures formed by 3/8" "V" Grooves.
"V" Grooves shall be formed by preformed Figures.

RAILROAD COMPANY	CLEARANCE BELOW BOTTOM OF RAIL (FEET)	STRENGTH ASTM (C76) CLASS
APALACHICOLA NORTHERN	4.0	IV
ATLANTA AND ST ANDREWS BAY	4.0	IV
FLORIDA EAST COAST	5.5*	IV
BURLINGTON NORTHERN RAILROAD	S-TRK M/L	
	4.5 5.5	IV
SEABOARD SYSTEM RAILROAD	5.5	IV
SOUTHERN RAILWAY SYSTEM		
GEORGIA SOUTHERN AND FLORIDA	5.5	V
LIVE OAK PERRY AND SOUTH GEORGIA	5.5	V
ST. JOHNS RIVER TERMINAL	5.5	V

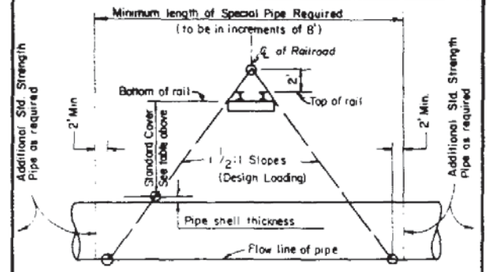

METHOD FOR DETERMINING THE LENGTH OF SPECIAL PIPE REQUIRED UNDER RAILROADS

* Clearance is for casing pipe. All subgrade carrier pipelines and wirelines will be installed within a casing pipe which will extend from Right-of-Way line to Right of Way line.

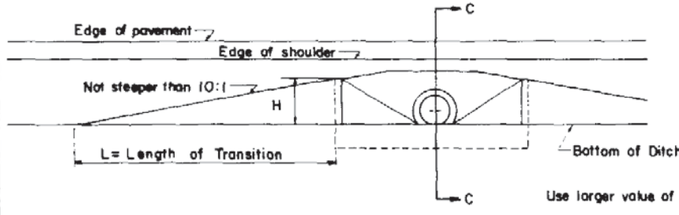

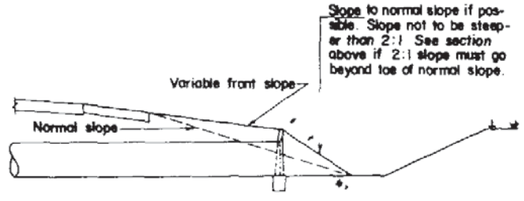

NOTE: Filling or excavation of variable slopes to be done during normal grading operations.

SECTION CC

Use larger value of either:

1. L = 10 X H (No maximum)
2. L = 10 X Ditch Offset (Maximum L = 100')

METHOD FOR SETTING LIMITS OF VARIABLE FRONT SLOPES AT DRAINAGE STRUCTURES

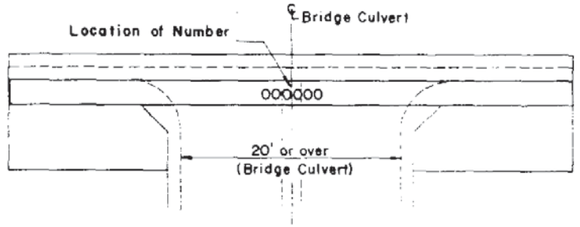

TOP VIEW OF HEADWALL

BRIDGE CULVERT NUMBER LOCATION

For Bridge Number See Plan-Profile Sheet(s).

STATE OF FLORIDA DEPARTMENT OF TRANSPORTATION
ROAD DESIGN

MISCELLANEOUS DRAINAGE DETAILS

	Names	Dates
Designed by		
Drawn by		
Checked by		
F.H.W.A. Approved 11/16/78		

Approved By: Deputy Design Engineer, Roadways

Revision No.	Sheet No.	Index No.
84	3 of 3	280

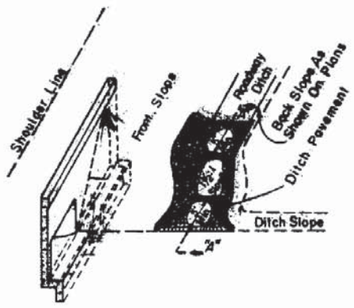

JUNCTION OF ROADWAY DITCH * AND LATERAL DITCH

* Soil cement or misc. asphalt will not be permitted for this type of construction.

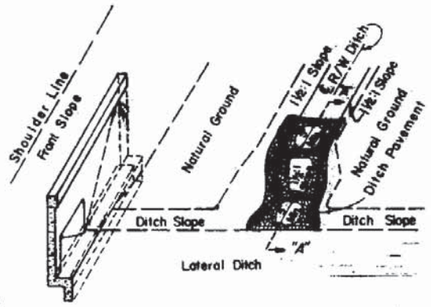

JUNCTION OF R/W DITCH * AND LATERAL DITCH

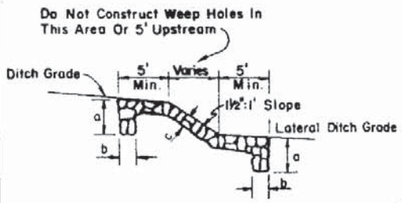

SECTION AA

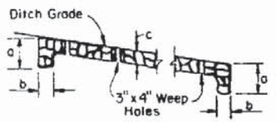

PROFILE OF DITCH PAVT. AT LOCATIONS OTHER THAN JUNCTION WITH LATERAL DITCH

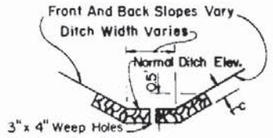

TYPICAL SECTION

Item ID	Pavement Type		Dimensions a	b	c	Payment Unit	Basis Of Estimate	Filter Fabric Type	Velocity Range	References & Remarks
							DITCH PAVEMENT			
524-1-1	Concrete		24"	6"	3"	SY	SY	Subsurface Drainage	Low-High	Section 524 of the Standard Specifcations.
339-1	Miscellaneous Asphalt		24"	12"	4"	TN	0.2 TN/SY	None	Low-Moderate	Section 339.
170-1	Soil-Cement		24"	12"	4"	SY	SY	None	Low	Section 170. Cement to be paid for under Item No. 170-2.
530-1-1	Riprap (Sand-Cement)		24"	12"	4"	CY	0.11 CY/SY	Subsurface Drainage	Low-Moderate	Section 530. Grouting of joints required.
530	Riprap (Concrete Block)		15⅝"	7⅝"	7⅝"	CY	0.22 CY/SY	Riprap Filter	Low	Subsection 530-2.2 Hole side up, closed staggerd joints (no grout), swaled section only.
530-70	Riprap (Broken Concrete) + Slurry		24"	12"	9"	SY	SY	Riprap Filter	Low-Moderate	Section 530 (Expanded).
530-3-1	Riprap (Rubble)	Broken Stone	26"	NA	26"	TN	0.8 TN/SY	Riprap Filter	Low-Moderate	Section 530. Design in accordance with FHWA HEC No. 15. D_{50} = 1.17 ft. (100 lb.)
		Broken Concrete	21"	NA	21"	TN	0.8 TN/SY	Riprap Filter	Low-Moderate	Section 530. Design in accordance with FHWA HEC No. 15. D_{50} = 1.11 ft. (100 lb.)

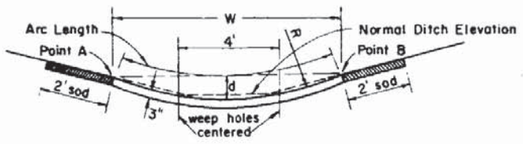

TO REPLACE:	W	d	R	No. of rows of weep holes	Arc Length
6' Median Swale	6'	.24'	19'	0	6.0
6:1 Front Slopes; 4:1 Back Slope					
5' B.W. Ditch	10'	.67'	19'	2	10.1
4' B.W. Ditch	9'	.54'	19'	2	9.1
4:1 Front slope & Back slope					
5' B.W. Ditch	9'	.74'	14'	2	9.2
4' B.W. Ditch	8'	.58'	14'	1 in center	8.1

ALTERNATE DITCH PAVEMENT

For use only where side slopes are 4:1 or flatter. Point "A" and "B" are to be the same elevation and should be used to locate the paved section.

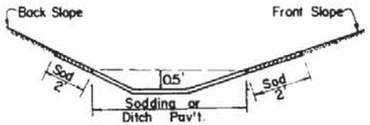

ROADWAY SIDE DITCH

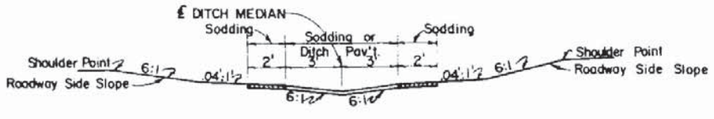

SWALED MEDIAN
(No Weep Holes)

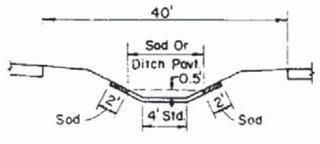

40' MEDIAN

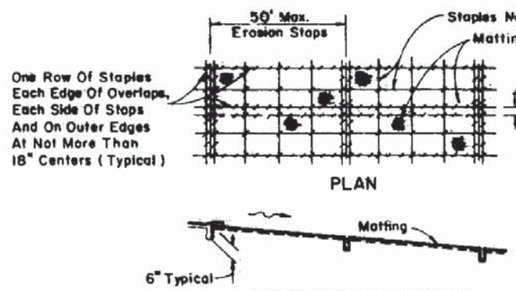

PLAN

LONGITUDINAL SECTION

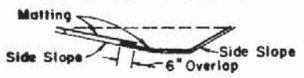

SECTION

MATTING FOR DITCH

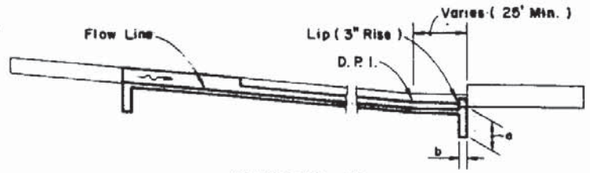

SECTION EE

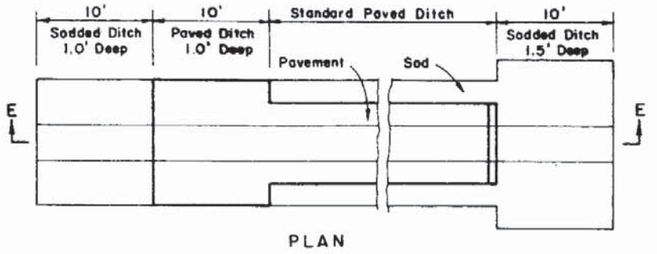

PLAN

PAVED DITCH END TREATMENT

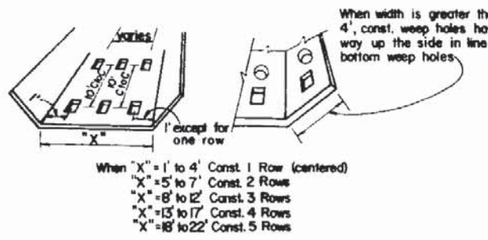

Notes: All weep holes to be 3" X 4" rectangle or 4" or 5" Dia. circular hole. 1/2 Cu. ft (12" x 12" x 6") of No. 6 aggregate to be placed under each hole. 1 Sq ft of galvanized wire mesh (1/4" openings) shall be placed between the aggregate and the concrete. Cost of holes, aggregate and wire mesh to be included in the cost of ditch pavement.

WEEP HOLE ARRANGEMENT

GENERAL NOTES

1. Type of ditch pavement shall be as shown on plans.
2. In concrete ditch pavement, contraction joints are to be spaced at 25' maximum intervals, or as directed by the Engineer. Contraction joints may be either formed (construction joint) or tooled. No open joints will be permitted.

   Expansion joints with ½" preformed joint filler shall be constructed at all inlets, endwalls, and at intervals of not more than 200'.
3. Lip at end of ditch pavement shall normally be located downstream of D.P.I. or on flatter grades where there is a decrease in ditch velocity.
4. Toewalls are to be used with all ditch paving. A toewall is not required adjacent to drainage structures.
5. When directed by the Engineer, weep hole spaing may be reduced to 5' minimum.
6. For junction of R/W ditch spillway and lateral ditch, sides of paving to be ½ high minimum.
7. For ditch pavements requiring filter fabric the fabric shall be placed directly beneath the pavement for the entire length and width of the pavement. When weep holes with aggregate are used the filter fabric shall be placed below the aggregate to form a mat continuous with or underlapping the pavement fabric.
8. Cost of plastic filter fabric to be included in the contract unit price for ditch pavement.

STATE OF FLORIDA DEPARTMENT OF TRANSPORTATION
ROAD DESIGN

DITCH PAVEMENT & SODDING

	Names	Dates
Designed By		
Drawn By		
Checked By		
F.H.W.A. Approved: 5/1/75		

Approved By: Deputy Design Engineer, Roadways

Revision No.	Sheet No.	Index No.
86	1 of 2	281

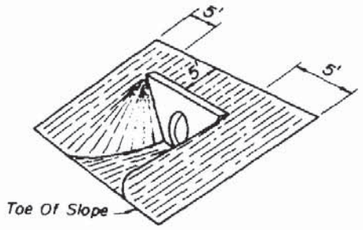

Note: Sodding quantities for each endwall to be determined by the designer from this detail.

(EXCEPT INDEX 250)

STRAIGHT ENDWALL

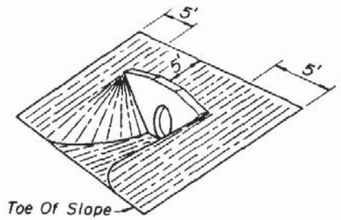

STRAIGHT ENDWALL
INDEX 250

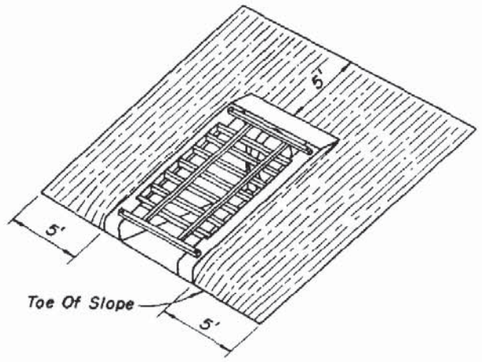

U-TYPE ENDWALL
INDEX 261

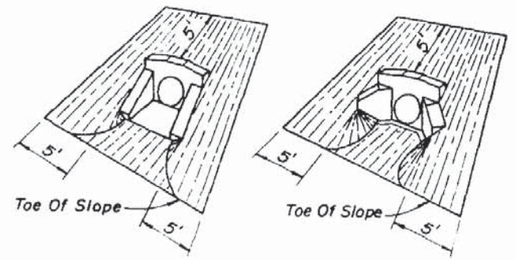

U-TYPE WINGS 45° WINGS

WINGED ENDWALLS
INDEX 266

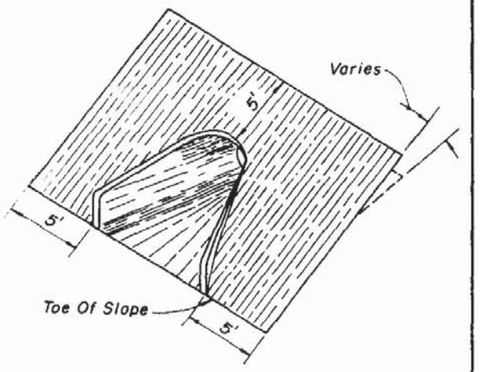

FLARED END SECTION
INDEX 270

SODDING QUANTITIES (S.Y.)

PIPE SIZE	INDEX 250												INDEX 261				INDEX 266				INDEX 270
	SLOPE												SLOPE				SLOPE				ALL SLOPES
	2:1			3:1			4:1			6:1			2:1	3:1	4:1	6:1	2:1	3:1	4:1	6:1	
	PIPES												PIPES				PIPES				PIPES
	1	2	3	1	2	3	1	2	3	1	2	3	1	1	1	1	1	1	1	1	1
12"																	14	15	18	22	10
15"	19	21	24	22	26	29	26	30	33	34	38	43	13(15)	16	17	23	15	17	20	25	11
18"	21	24	27	25	29	33	30	34	38	39	44	50	14(16)	17	19	25	16	18	22	28	11
21"																					12
24"	26	30	34	32	37	42	38	44	50	50	58	66	15(17)	19	21	28	19	22	26	34	14
27"																					15
30"	31	37	42	39	46	53	46	55	63	62	74	85	17(18)	21	24	32	21	25	30	40	16
36"	37	44	52	46	56	65	56	67	79	76	91	107					24	29	35	47	18
42"	43	53	62	55	67	79	67	82	96	91	111	132					27	32	39	54	19
48"	50	62	73	64	79	93	78	97	115	108	133	158					30	36	44	61	21
54"	57	71	85	74	92	110	91	113	136	126	157	188									21
60"																					22
66"																					25
72"																					26
													() Endwall With Baffles								

STATE OF FLORIDA DEPARTMENT OF TRANSPORTATION
ROAD DESIGN

DITCH PAVEMENT & SODDING

	Names	Dates
Designed by:		
Drawn by:	HSD	8/85
Checked by:	JBW/JVG	9/85
FHWA Approved:	7/7/75	

Approved By
State Design Engineer, Roadways

Revision No.	Sheet No.	Index No.
86	2 of 2	281

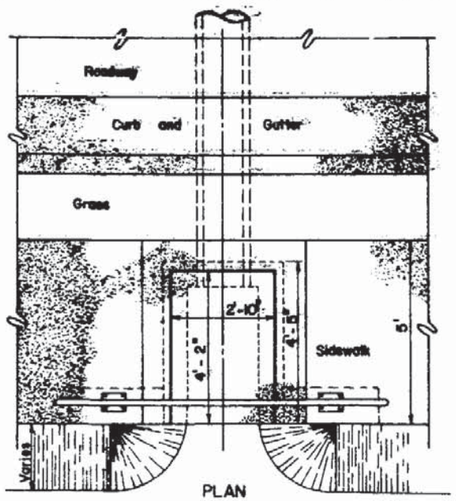

PLAN

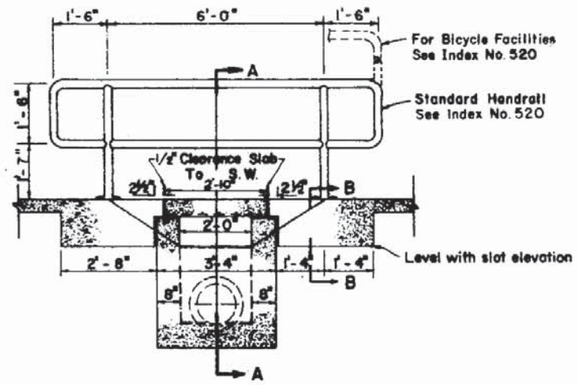

FRONT ELEVATION

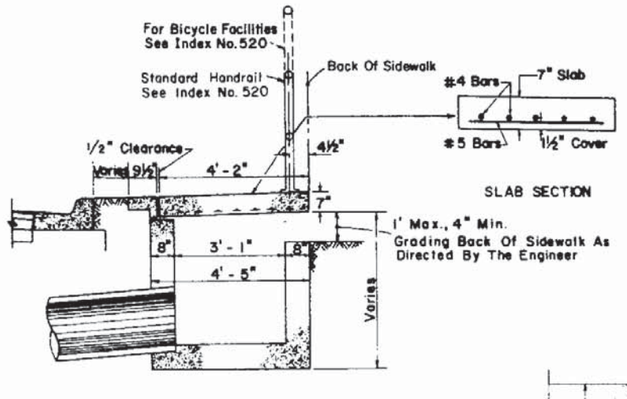

SLAB SECTION

SECTION A-A

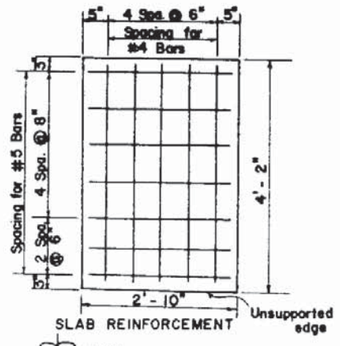

SLAB REINFORCEMENT

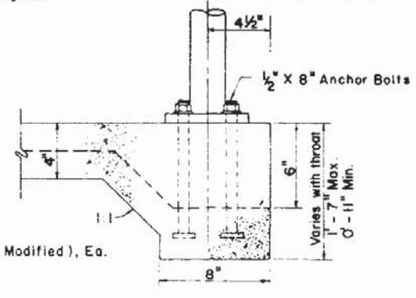

SECTION BB

Notes:

1. For additional details see Index No. 232.
2. Inlet to be paid for under the contract unit price for Inlets (Ditch Bottom)(Type C Modified), Ea.

INLET TYPE C (MODIFIED)

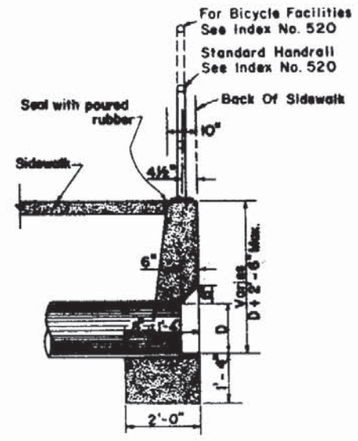

SECTION AA

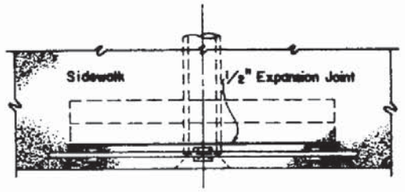

PLAN

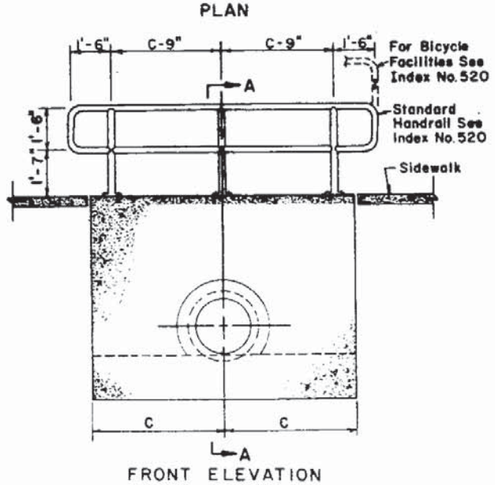

FRONT ELEVATION

Pipe Size	C	Conc. - CY
15"	4'-9"	2.27
18"	5'-3"	2.59
24"	6'-3"	3.26

Notes:

1. Maximum pipe size shall be 24" diameter.
2. Grading back of sidewalk varies and shall be done as directed by the Engineer.
3. Concrete quantities shown are for maximum wall heights, and shall be basis for estimate and payment
4. Endwalls to be paid for under the contract unit price for Class I Concrete (Endwalls), CY. Handrail to be paid for under the contract unit price for Pipe Handrail, LF.

SPECIAL CONCRETE ENDWALL

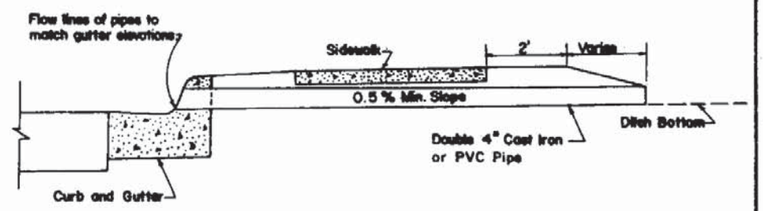

Notes:

1. To be constructed at locations as directed by the Engineer.
2. Either cast iron pipe or PVC pipe, Schedule 40, may be used. Pipe to be paid for under the contract unit price for either Cast Iron Pipe Culvert (Standard)(4"), L.F or Polyvinyl Chloride Pipe Culvert (4"), L.F.

SHALLOW DITCHES

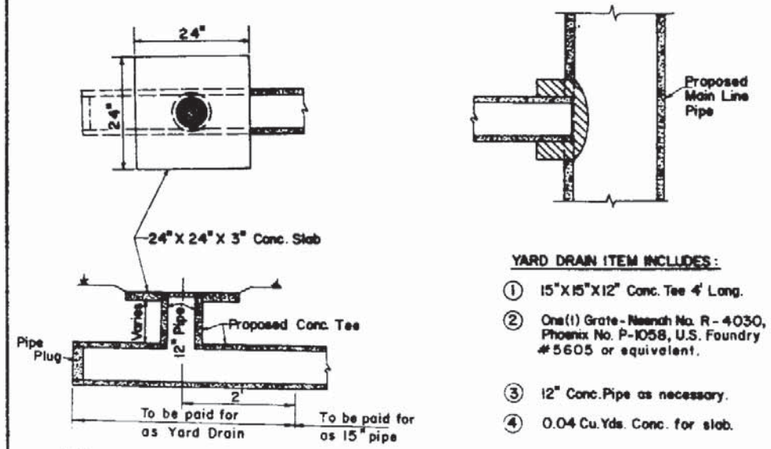

YARD DRAIN ITEM INCLUDES:

① 15"X15"X12" Conc. Tee 4' Long.
② One(1) Grate-Neenah No. R-4030, Phoenix No. P-1058, U.S. Foundry #5605 or equivalent.
③ 12" Conc. Pipe as necessary.
④ 0.04 Cu.Yds. Conc. for slab.

Notes:

1. Yard drains may be constructed at the option of the property owner as shown on the plans.
2. Cost of plugs and collars to be included in the cost for 15" concrete pipe. For collar and plug details see index No. 280
3. Yard drains to be paid for under the contract unit price for Yard Drains, Each.

YARD DRAINS

STATE OF FLORIDA DEPARTMENT OF TRANSPORTATION
ROAD DESIGN

BACK OF SIDEWALK DRAINAGE

	Names	Dates
Designed by		
Drawn by		
Checked by		
W.H.W.A. Approved 5/1/75		

Approved By
Deputy Design Engineer, Roadways

Revision No.	Sheet No.	Index No.
84	1 of 1	282

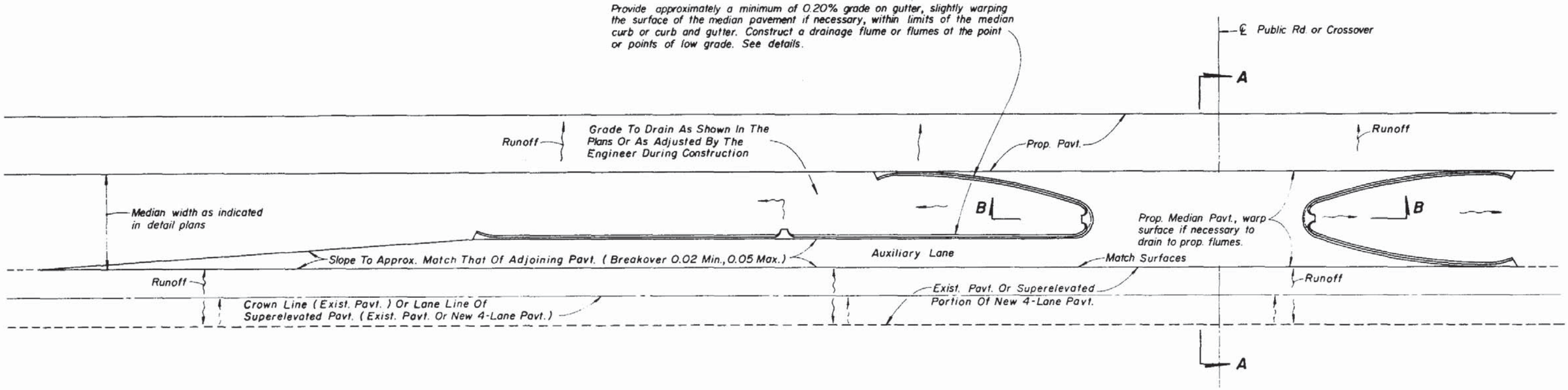

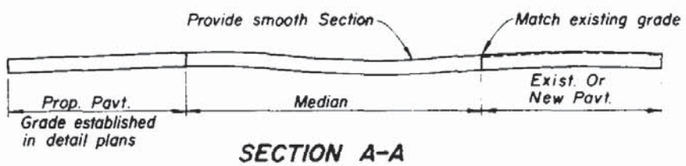

SECTION A-A



SECTION B-B

(May Drain From Any Point Designated In The Plans Or As Adjusted By The Engineer During Construction)

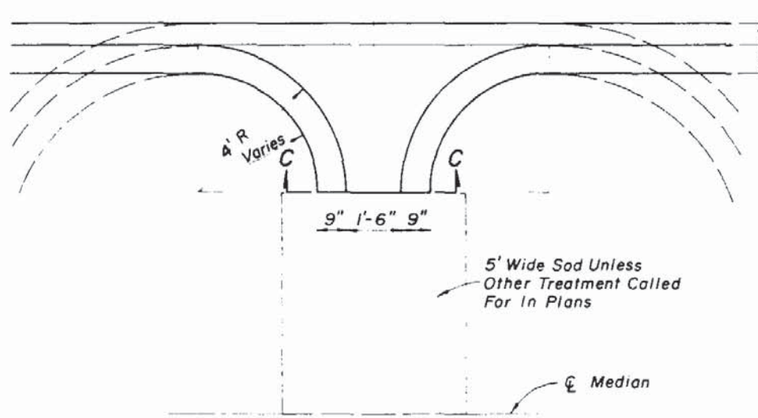

FLUME DETAIL

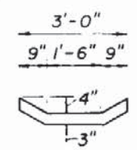

SECTION CC

General Notes

1. These details are to apply to projects which provide for the conversion of 2-lane sections to 4-lane divided highway sections and for superelevated sections of new 4-lane divided highways. Layout above is illustration only. Cost of flumes to be included in the contract price for Curb or Curb and Gutter. Sod to be paid for under the contract unit price for Sodding, SY.
2. Flumes to be located in low point of noses and at other points as designated in the the plans. The locations may be adjusted by the Engineer during construction.

STATE OF FLORIDA DEPARTMENT OF TRANSPORTATION
ROADWAY DESIGN

MEDIAN OPENING FLUME

CHR 3/59			
CDD 3/59			
3/20/75	83	1 of 1	283

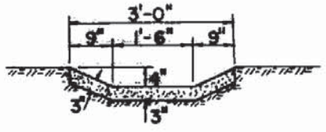

SECTION AA

Note: Set reflector plates on right hand curb at bridge ends as shown. Plates to be furnished by D.O.T. and installed by the contractor. Cost of installing plates to be included in the contract unit price for concrete ditch pavement (3" thick).



SECTION BB

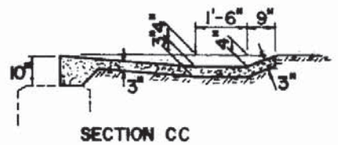

SECTION CC

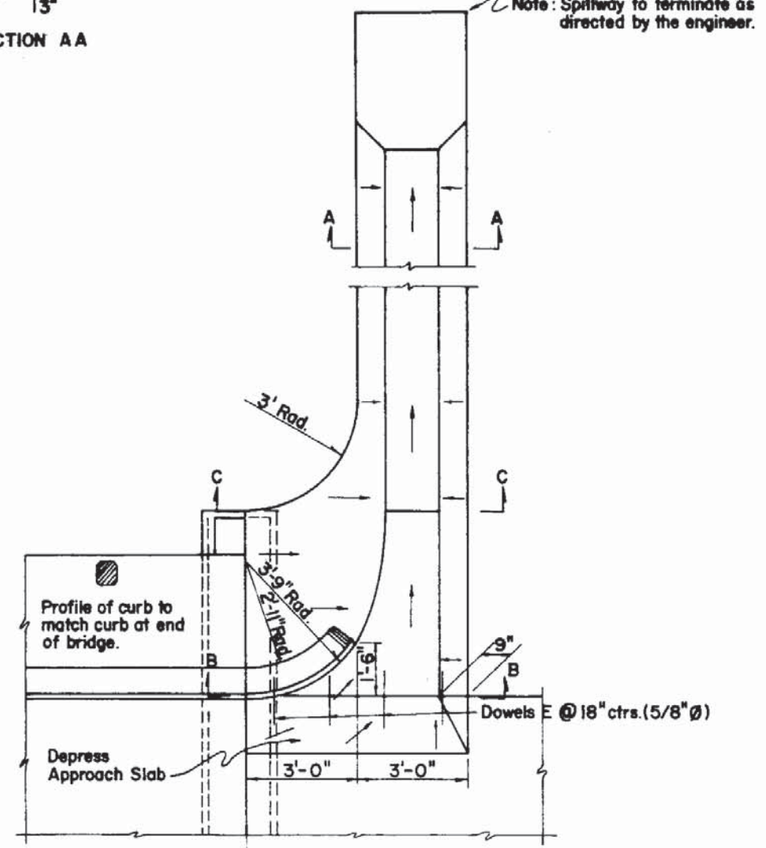

BRIDGE — APPROACH SLAB

PLAN

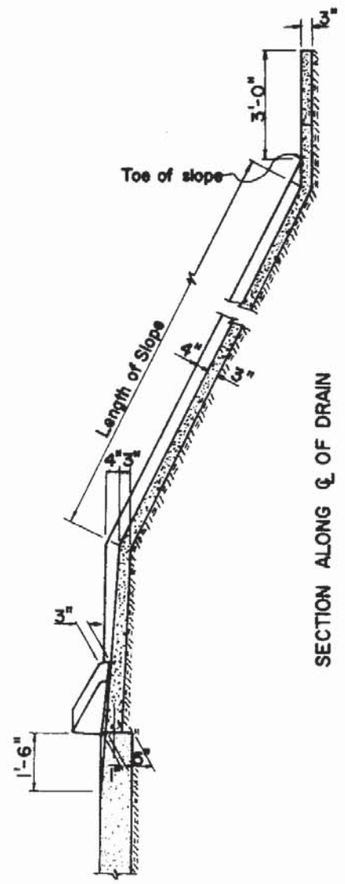

SECTION ALONG ℄ OF DRAIN

Dowels to be included in the contract unit price for concrete ditch pavement (3" thick).

ESTIMATED QUANTITIES		
ITEM	UNIT	QUANTITY
Concrete Ditch Pavement (3" Thick)	Sq. Yd.	* 10.87

*Quantity shown above includes pavement for 10 ft. " Length of Slope ". For each additional foot of slope length add 0.349 sq. yds.

STATE OF FLORIDA DEPARTMENT OF TRANSPORTATION
ROAD DESIGN

CONCRETE SPILLWAYS

BRIDGE END SPILLWAY

	Names	Dates
Designed by:	C.E.S.	12/31
Drawn by:		
Checked by:	H.L.F.	12/31
F.H.A. Approved:		3/20/75

Approved By: Deputy Design Engineer, Roadways

Revision No	Sheet No	Index No
81	1 of 2	284

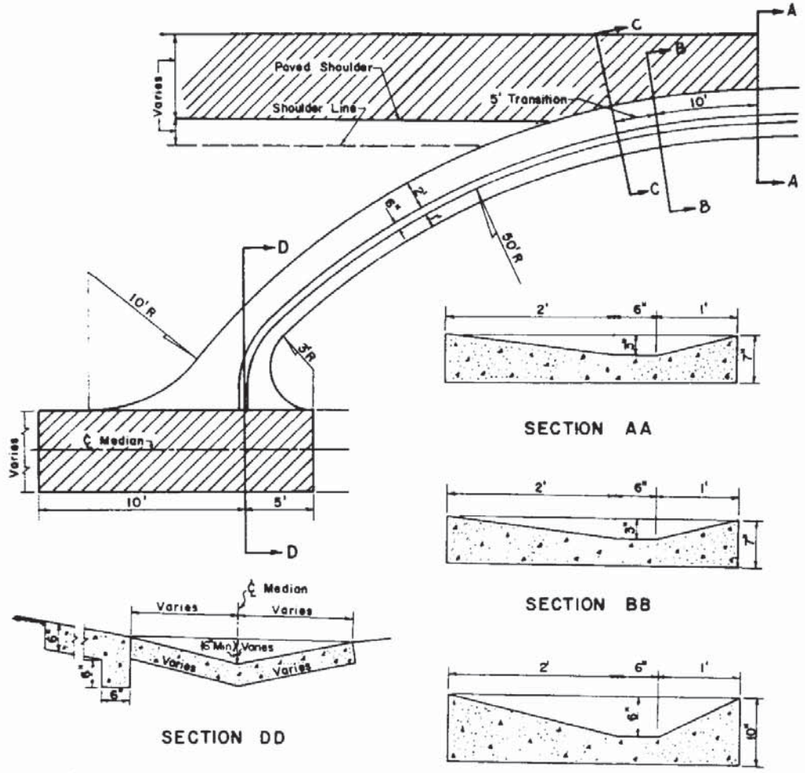

NOTES

1. Spillway to be paid for as shoulder gutter.
2. If spillway empties into a shallow or median ditch, the detail should be modified as necessary

DETAIL OF CONC. SPILLWAY AT END OF SHOULDER GUTTER

(TO BE USED WHERE INLETS, PIPES & ENDWALLS ARE IMPRACTICAL)

STATE OF FLORIDA DEPARTMENT OF TRANSPORTATION
ROAD DESIGN

CONCRETE SPILLWAYS
SHOULDER GUTTER SPILLWAY

	Names	Dates
Designed by		
Drawn by		
Checked by		
C - M - E	Approved 11/16/78	

Approved By
Deputy Design Engineer, Roadways

Revision No.	Sheet No.	Index No.
81	2 of 2	284

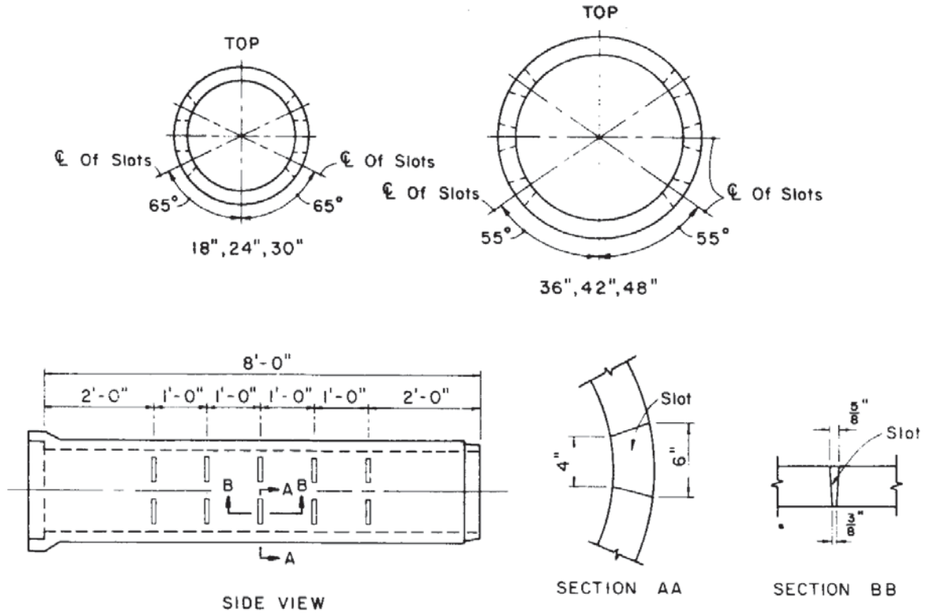

OPTION A

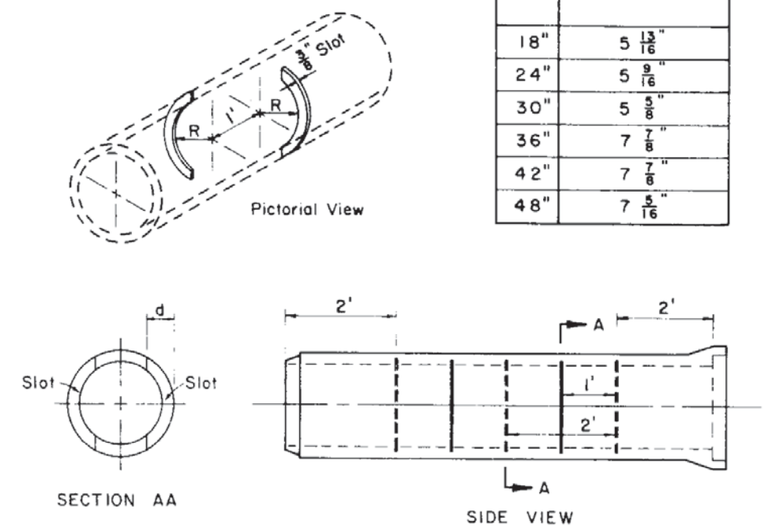

OPTION B

Pipe Size	Depth Of Cut (d)
18"	5 13/16"
24"	5 9/16"
30"	5 5/8"
36"	7 7/8"
42"	7 7/8"
48"	7 5/16"

SLOTTED PIPE OPTIONS

GENERAL NOTES

1. The type of pipe (metal or concrete) to be installed shall be as stipulated in the plans. Dissimilar types of pipe will not be permitted in a continuous run of pipe.
2. Concrete pipe shall be placed with the slots positioned on the sides.
3. Alignment joints are standard (gaskets not required).
4. The contractor may submit other methods of providing slots having equal or greater area of opening for approval by the Engineer.
5. Filter fabric shall be Subsurface Drainage type meeting the requirements of Section 985. All filter fabric joints shall lap a minimum of one (1) foot.
6. The standard cross section shall be constructed unless other section (s) detailed in the plans.
7. For supplemental details see Index No. 280.
8. The contractor shall take the necessary precautions to prevent contamination of the trench by sand, silt and foreign materials.
9. The 12" diameter weep hole shall be eliminated when the bottom of the inlet is below the normal water table, unless otherwise shown in the plans.
10. The cost for installation of pipe, filter fabric, and No. 4 coarse aggregate to be included in the contract unit price for French Drain, LF. Basis of payment for French Drain shall be the standard cross section unless other section (s) detailed in the plans. There will be no additional compensation for aggregate or filter fabric used over and above that required for section (s) stipulated in the plans. The cost for installation of the 12" diameter weep hole, filter fabric, galvanized hardware cloth and No. 4 coarse aggregate to be included in the contract unit price for inlets, and pipe plugs as required to be included in the contract unit price for pipe.

DESIGN NOTES

1. Pipe invert should be at or above the water table whenever possible.

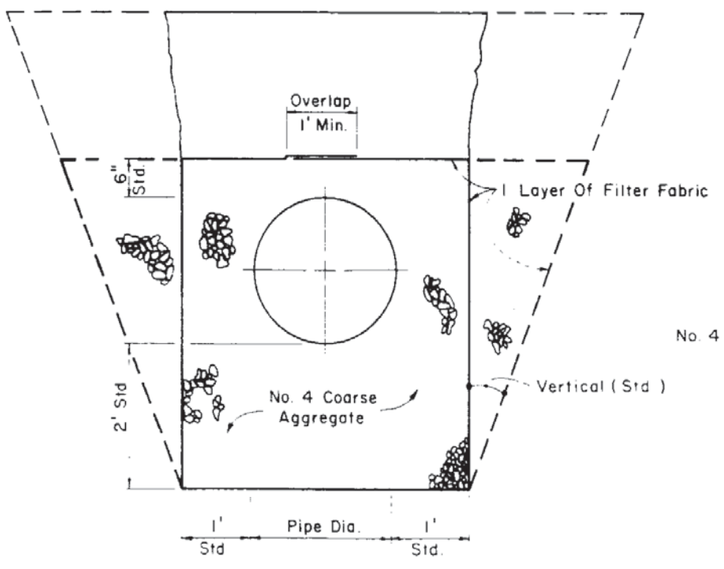

STANDARD CROSS SECTION (ENLARGED)

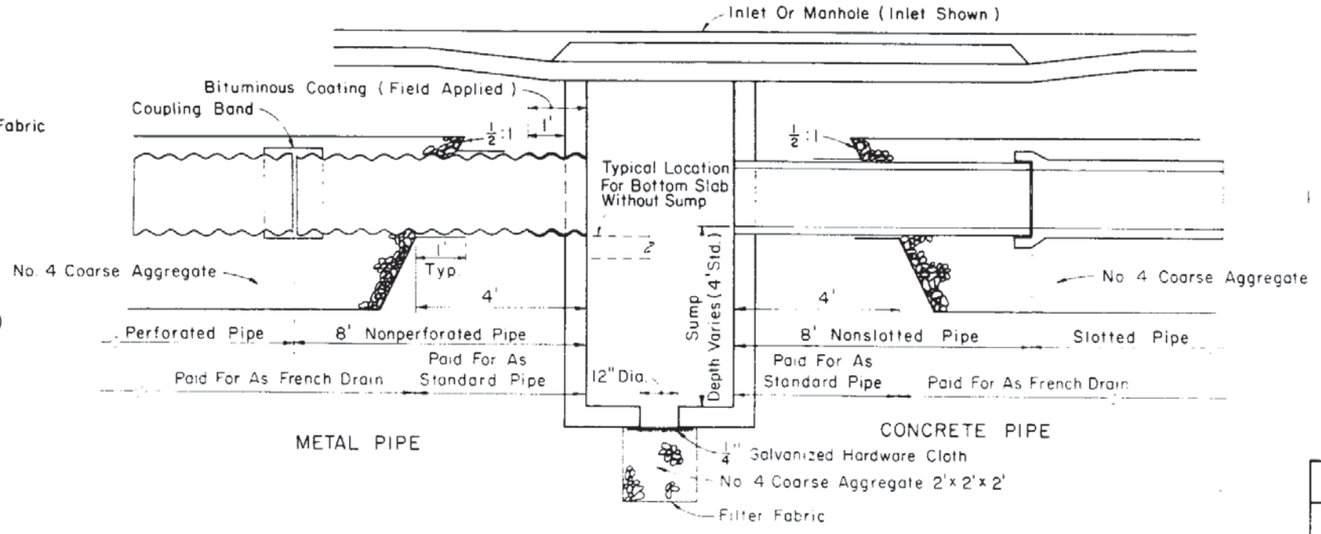

LONGITUDINAL SECTION

FRENCH DRAIN SYSTEM

STATE OF FLORIDA DEPARTMENT OF TRANSPORTATION
ROAD DESIGN

FRENCH DRAIN

	Name	Date
	MPS	9/83
	PWR	9/83
	EDR	9/83
	Approved	9/6/83

Approved By: [signature] State Design Engineer, Roadway

Revision No.	Sheet No.	Index No.
86	1 of 1	285

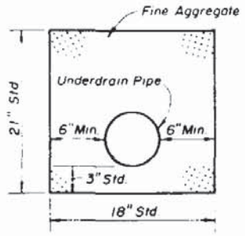

TYPE I

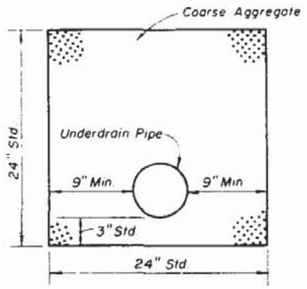

TYPE II

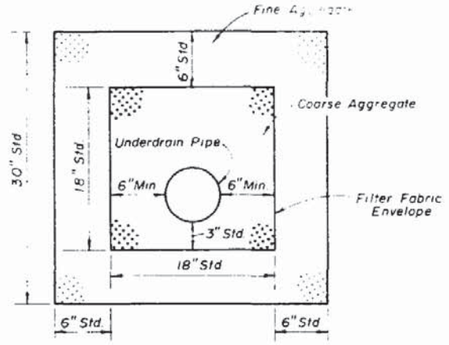

TYPE III

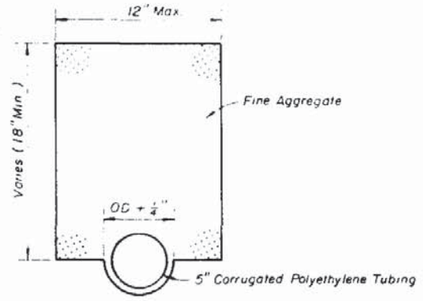

TYPE IV

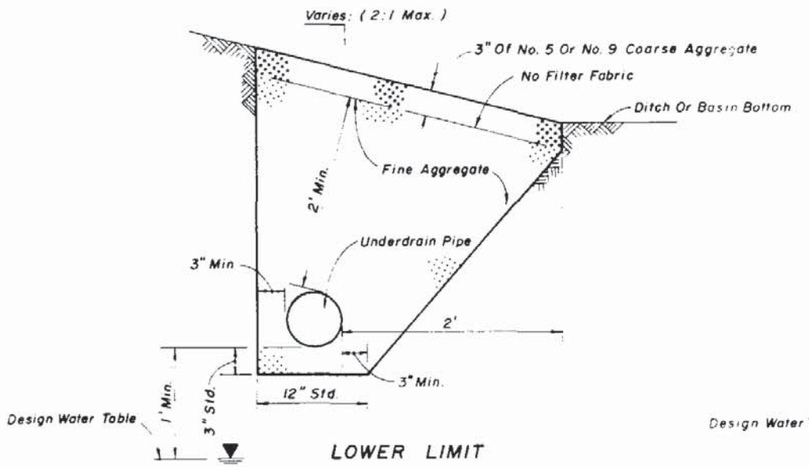

LOWER LIMIT

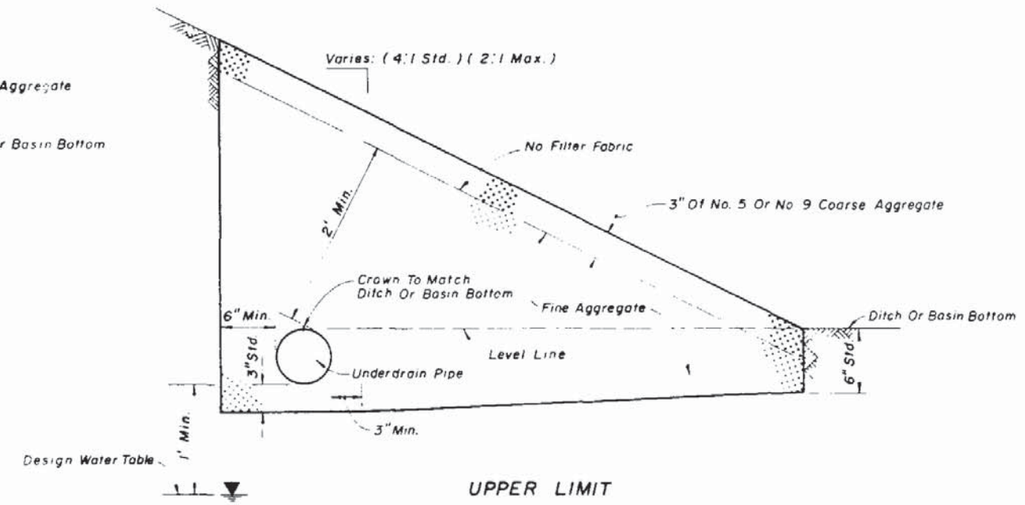

UPPER LIMIT

TYPE Va

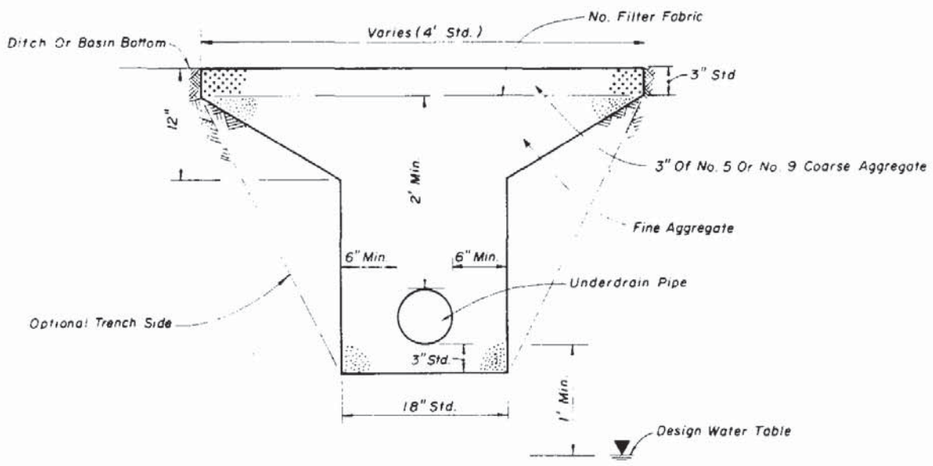

TYPE Vb

DESIGN NOTES

1. The type of underdrain should be selected to meet design water removal rate and soil conditions. Caution is prescribed in the use of these typical sections since special designs may be required to satisfy project conditions.
2. Type I underdrain is intended for minimum water removal conditions.
3. Type II underdrain is intended for moderate water removal conditions. Where reactive conditions may create chemical clogging, the use of an inert material and/or elimination of the filter fabric may be necessary.
4. Type III underdrain is intended for maximum water removal conditions. The filter fabric separation is required between the coarse aggregate or fine aggregate including those described in general notes 2 and 3. Design note 3 applies for reactive conditions.
5. Type IV underdrain is intended for minimum water removal edgedrain and underdrain applications.
6. Type V underdrain is intended for use in detention basins and other locations which require a filtration system. Type Va is recommended and Type Vb should be used only when Type Va is inappropriate.
7. The designer should evaluate whether a filter fabric envelope is required around underdrain Types I, III, IV and Va. When required, fabric shall be specified in the plans. Fabric to be paid for separately.

GENERAL NOTES

1. The underdrain pipe shall be either 4" smooth or 5" corrugated tubing unless otherwise shown in the plans.
2. Fine aggregate shall be quartz sand meeting the requirements of Section 902-4 of the Standard Specifications.
3. Coarse aggregate shall be gravel or stone meeting the requirements of Section 901-2 or 901-3 respectively. The gradation shall meet Section 901-6, Grades 4, 467, 5, 56 or 57 stone unless restricted in the plans.
4. Underdrain Type I, II, III and V shall be in accordance with Section 440 and Underdrain Type IV (Edgedrain) in accordance with Section 441.
5. Filter fabric meeting Section 985 shall be a subsurface drainage type.
6. When corrugated polyethylene tubing with slots or 360° perforations is used in conjunction with fine aggregate, a filter fabric sock is required.
7. For standard location details, see Index 500. Special locations require location details in the plans.
8. The contract unit price for Underdrain, LF, shall include the following components for each underdrain type as follows:
   - Type I: Pipe, sock and aggregate.
   - Type II: Pipe, aggregate and filter fabric envelope.
   - Type III: Pipe, aggregates and internal filter fabric envelope.
   - Type Va & Vb: Pipe, sock and aggregates.

   Underdrain Type IV is to be paid for under the contract unit price Corrugated Polyethylene Tubing Edgedrain, LF, and shall include the cost for tubing, sock and aggregate.

   External filter fabric envelopes, when specified for underdrain Types I, II, IV and Va, shall be paid for separately under the contract unit price for Plastic Filter Fabric (___) SY.
9. All filter fabric joints shall overlap a minimum of one (1) foot.

STATE OF FLORIDA DEPARTMENT OF TRANSPORTATION
ROAD DESIGN

UNDERDRAIN

	Names	Dates
Designed by	EGR	10/85
Drawn by	HSC	10/85
Checked by	EGR	10/85

Approved By: [signature] State Design Engineer, Roadways

Revision No.	Sheet No.	Index No.
86	1 of 1	286

F.H.W.A. Approved:

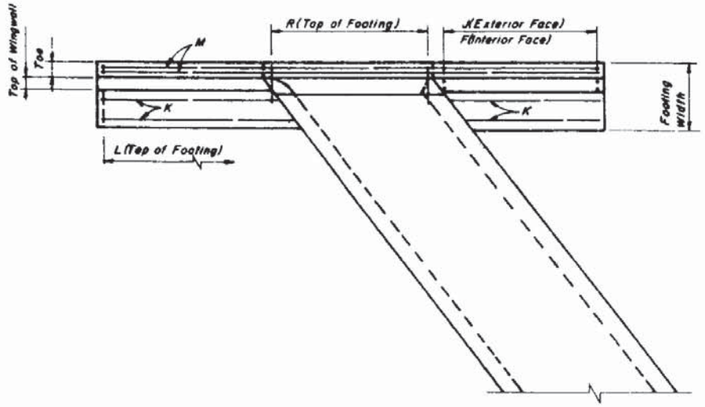

PART PLAN AT END OF CULVERT

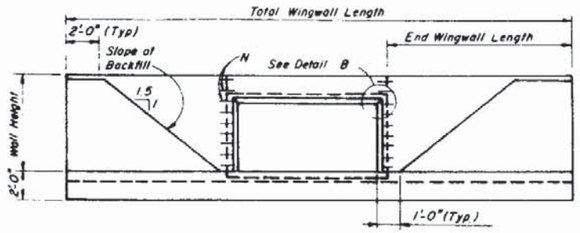

END ELEVATION

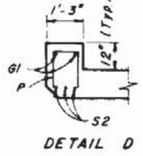

DETAIL D

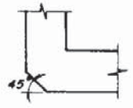

SECTION C-C

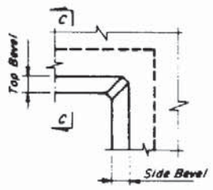

DETAIL B

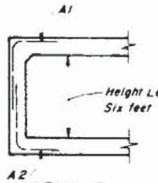

DETAIL E

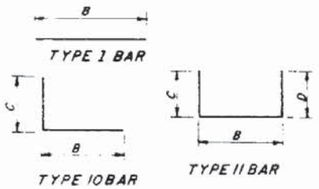

TABLE OF MINIMUM BAR SPLICE LENGTHS

BAR SIZE	SPLICE	BAR SIZE	SPLICE
4	1'-8"	8	3'-10"
5	2'-2"	9	4'-10"
6	2'-7"	10	6'-1"
7	3'-0"	11	7'-6"

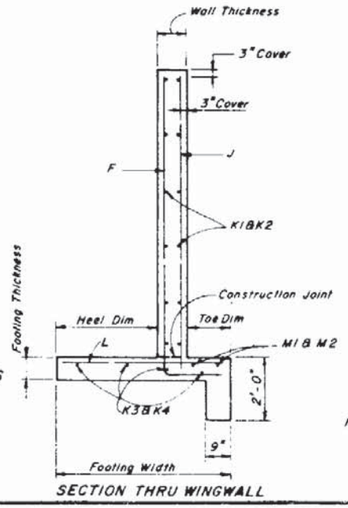

SECTION THRU WINGWALL

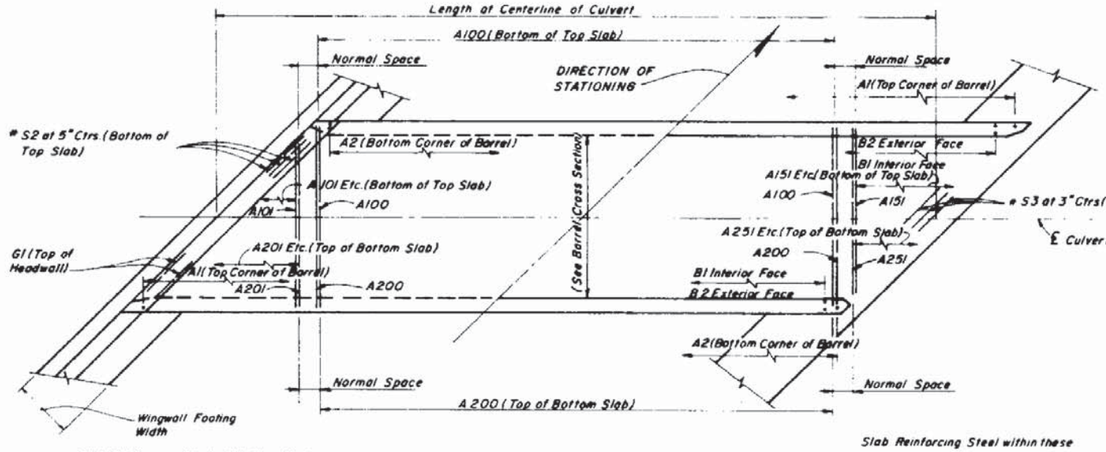

Slab Reinforcing Steel within these limits apply for the skewed portion of culvert slabs when the left wingwall is skewed.

Also the skewed portion of slabs at both ends of culverts when the left and right wingwalls are skewed the same.

PART PLAN TOP SLAB

Slab Reinforcing Steel within these limits apply for nonskewed culverts.

Also the nonskewed portion of culverts with one or two skewed wingwalls.

PART PLAN BOTTOM SLAB

Slab Reinforcing Steel within these limits apply for the skewed portion of culvert slab when the right wingwall only is skewed.

Also the skewed portion of slabs at the right end of culverts when the left and right wingwalls are both skewed but not the same.

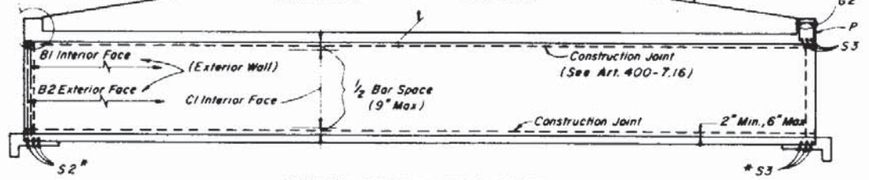

SECTION NORMAL TO CULVERT

NOTE: Depth of fill indicates distance from top of Finish Grade to bottom of top Slab.

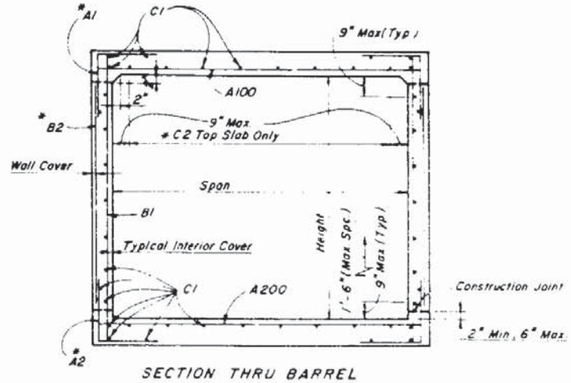

SECTION THRU BARREL

NOTE: When the wingwalls are not skewed with relation to the barrel bars K2, K4 and M2 will not be utilized.

NOTE: The location of the first bar from the ends of the culvert shall not be less than 3", but not greater than one half the bar spacing.

* REINFORCING BAR SCHEDULE:

A. When the depth of fill is less than or equal to 2.0 feet, Bars C2 are utilized in the bottom of the top slab. In all other cases, Bars C2 are replaced with Bars C1 spaced at 18 inches on centers.

B. When the skew angle for a side equals 0° ± 11° then the respective S Bars (S2 or S3) will not be utilized.

C. When the barrel height is less than 6 feet, Bars B2 shall be eliminated as shown in Detail E.

D. When the wingwalls are parallel, the following bars are equal in size, length and spacing: K1 = K2, K3 = K4, M1 = M2, G1 = G2, S2 = S3, A101 (etc.) = A151 (etc.), A201 (etc.) = A251 (etc.). Also, only Bars K1, K3, M1, G1, S2, A101 (etc.), and A201 (etc.) shall be listed in the Reinforcing Bar Schedule.

E. If the span is less than five feet, Bars A1 and A2 will be Type 11 Bars.

NOTE: Skew for Computerized Culvert Design Only is the angle between a line perpendicular to the ℄ Culvert and the face of Wingwall measured clockwise.

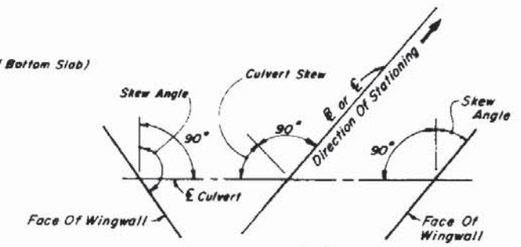

SKETCH "A"

NOTE: Normally Wingwalls are parallel to ℄ Roadway in the direction of stationing, for exceptions and the direction of skews see Roadway Plans.

GENERAL NOTES

DESIGN SPECIFICATIONS; A.A.S.H.T.O., 1977

LOADING; HS20-44, Modified for Military Loading as Required

SURFACE FINISH; The Class Surface finish for all concrete surfaces shall be a general surface finish.

REINFORCING; Deformed welded wire fabric may be substituted for all or part of the reinforcing steel provided an equal area of steel is used and if the details are approved by the Engineer.

SKEWED CONSTRUCTION JOINTS; Construction Joints in barrels of culverts with skewed wingwalls may be placed parallel to the wingwalls; and the reinforcing steel, in the slabs may be cut provided that the cut reinforcing steel extends beyond the construction joint enough for splices to be made in accordance with the table (lower left) this sheet. The cost of construction joints shall be at the expense of the Contractor.

NOTE: Computerized Culvert Design applies to barrels with clear spans of 4 feet or greater and clear heights of 3 feet or greater.

STATE OF FLORIDA DEPARTMENT OF TRANSPORTATION
ROAD DESIGN

CONCRETE BOX CULVERT
SINGLE BARREL

	Name	Date
Designed by	C.W./A.M.M.	10-81
Drawn by		
Checked by	R.D.S.	10-81
F.H.W.A. Approved:	9/23/82	

Approved By

State Design Engineer, Roadways

Revision No.	Sheet No.	Index No.
84	1 of 4	290

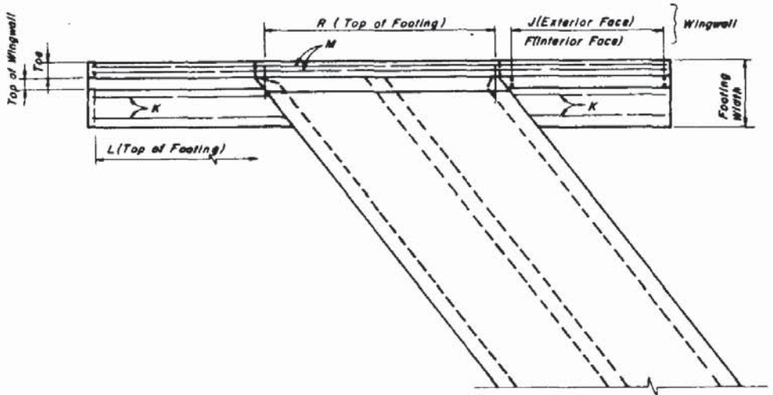

PART PLAN AT END OF CULVERT

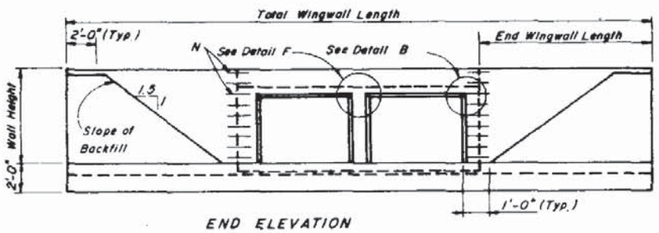

END ELEVATION

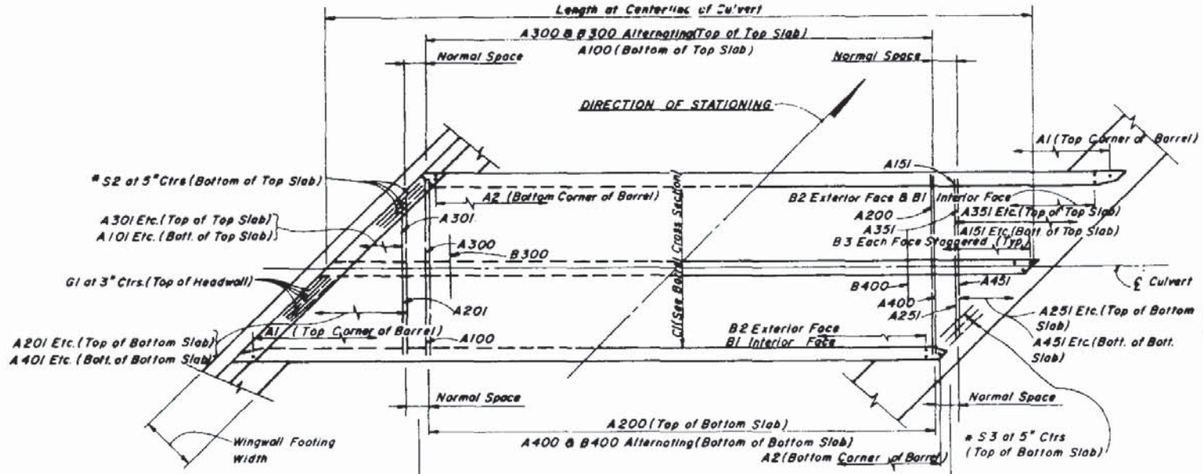

Slab Reinforcing Steel within these limits apply for the skewed portion of culvert slabs when the left wingwall is skewed.

Also the skewed portion of slabs at both ends of culverts when the left and right wingwalls are skewed the same.

PART PLAN TOP SLAB

Slab Reinforcing Steel within these limits apply for nonskewed culverts.

Also the nonskewed portion of culverts with one or two skewed wingwalls.

NOTE: Bars B3 & B400 Shall be located at the ℄ of the interior walls.

PART PLAN BOTTOM SLAB

Slab Reinforcing Steel within these limits apply for the skewed portion of culvert slabs when the right wingwall only is skewed.

Also the skewed portion of slabs at the right end of culverts when the left and right wingwalls are both skewed but not the same.

NOTE: Skew for Computerized Culvert Design Only is the angle between a line perpendicular to the ℄ Culvert and the face of Wingwall measured clockwise.

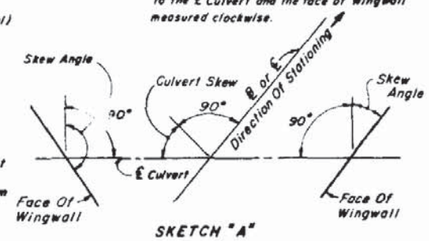

SKETCH "A"

NOTE: Normally Wingwalls are parallel to ℄ Roadway in the direction of Stationing; for exceptions and the direction of skews see Roadway Plans.

GENERAL NOTES

DESIGN SPECIFICATIONS; A.A.S.H.T.O., 1977

LOADING; HS20-44, Modified for Military Loading as Required.

SURFACE FINISH; The Class Surface finish for all concrete surfaces shall be a general surface finish.

REINFORCING; Deformed welded wire fabric may be substituted for all or part of the reinforcing steel provided an equal area of steel is used and if the details are approved by the Engineer.

SKEWED CONSTRUCTION JOINT; Construction Joints in barrels of culverts with skewed wingwalls may be placed parallel to the wingwalls; and the reinforcing steel, in the slabs, may be cut provided that the cut reinforcing steel extends beyond the construction joint enough for splices to be made in accordance with the table (lower left) this sheet. The cost of construction joints shall be at the expense of the Contractor.

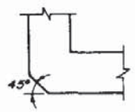

SECTION C-C

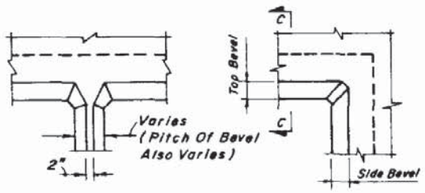

DETAIL F

DETAIL B

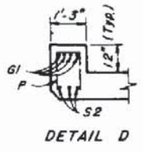

DETAIL D

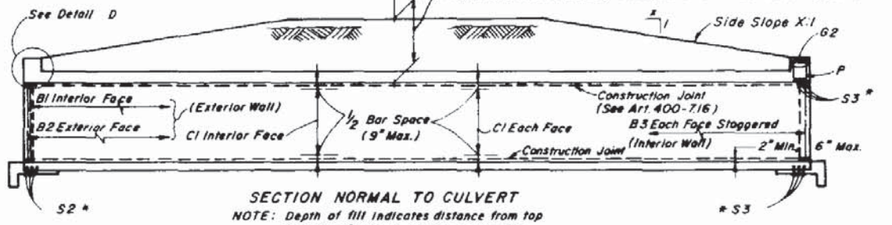

SECTION NORMAL TO CULVERT

NOTE: Depth of fill indicates distance from top of Finish Grade to bottom of top Slab.

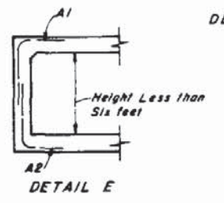

DETAIL E



TYPE 1 BAR

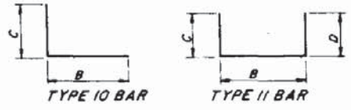

TYPE 10 BAR

TYPE 11 BAR

TABLE OF MINIMUM BAR SPLICE LENGTHS

BAR SIZE	SPLICE	BAR SIZE	SPLICE
4	1'-8"	8	3'-10"
5	2'-2"	9	4'-10"
6	2'-7"	10	6'-1"
7	3'-0"	11	7'-6"

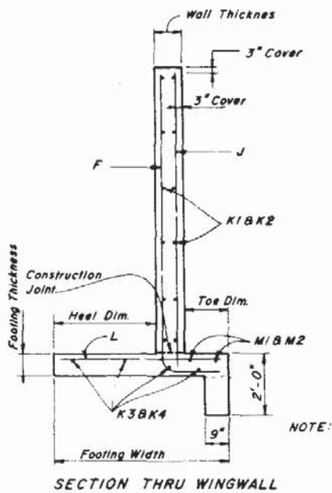

SECTION THRU WINGWALL

NOTE: When the wingwalls are not skewed with relation to the barrel bars K2, K4 and M2 will not be utilized.

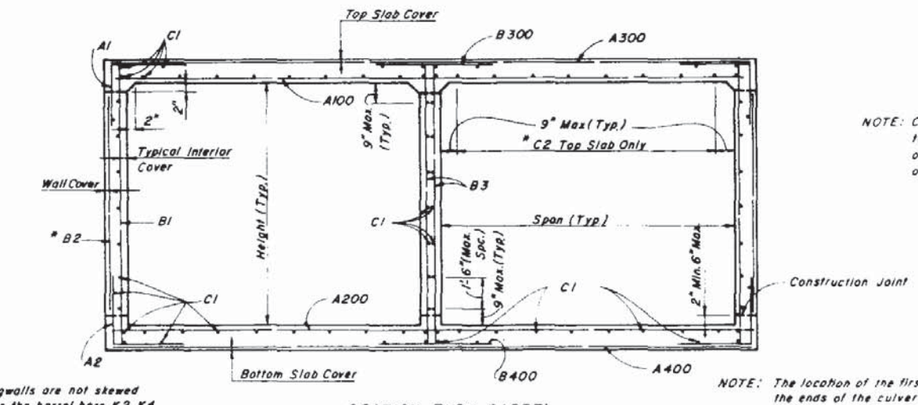

SECTION THRU BARREL

NOTE: The location of the first bar from the ends of the culvert shall not be less than 3", but not greater than one half the bar spacing.

NOTE: Computerized Culvert Design applies to barrels with clear spans of 4 feet or greater and clear heights of 3 feet or greater.

* REINFORCING BAR SCHEDULE:

A. When the depth of fill is less than or equal to 2.0 feet, Bars C2 are utilized in the bottom of the top slab. In all other cases, Bars C2 are replaced with Bars C1 spaced at 18 inches on centers.

B. When the skew angle for a side equals 0° ± 11° then the respective S Bars (S2 or S3) will not be utilized.

C. When the barrel height is less than 6 feet, Bars B2 shall be eliminated as shown in Detail E.

D. When the wingwalls are parallel, the following bars are equal in size, length and spacing; K1 = K2, K3 = K4, M1 = M2, G1 = G2, S2 = S3, A101 (etc.) = A151 (etc.), A201 (etc.) = A251 (etc.), A301 (etc.) = A351 (etc.), A401 (etc.) = A451 (etc.) Also, only Bars K1, K3, M1, G1, S2, A101 (etc.), A201 (etc.), A301 (etc.), and A401 (etc.) shall be listed in the Reinforcing Bar Schedule.

STATE OF FLORIDA DEPARTMENT OF TRANSPORTATION
ROAD DESIGN

CONCRETE BOX CULVERT
DOUBLE BARREL

	Names	Dates
Designed by	C.W./A.M.M.	10-81
Drawn by		
Checked by	R.D.S.	10-81
F.H.W.A.	Approved 9/25/82	

Approved By
State Design Engineer, Roadways

Revision No.	Sheet No.	Index No.
84	2 of 4	290

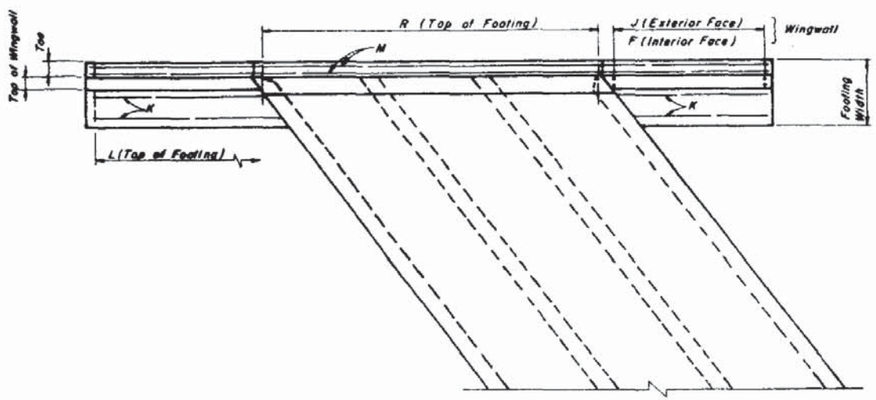

PART PLAN AT END OF CULVERT

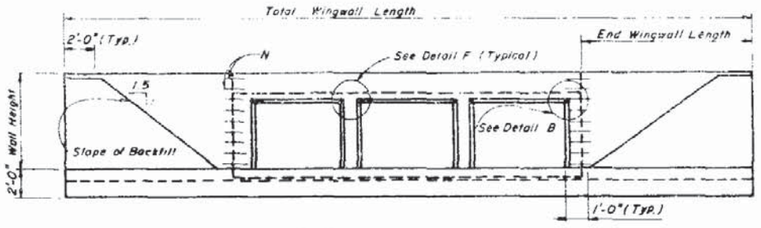

END ELEVATION

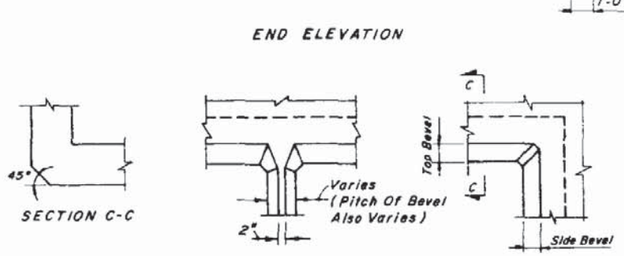

SECTION C-C

DETAIL F

DETAIL B

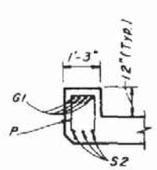

DETAIL D

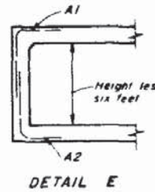

DETAIL E

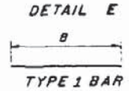

TYPE 1 BAR

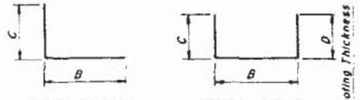

TYPE 10 BAR

TYPE 11 BAR

TABLE OF MINIMUM BAR SPLICE LENGTHS

BAR SIZE	SPLICE	BAR SIZE	SPLICE
4	1'-8"	8	3'-10"
5	2'-2"	9	4'-10"
6	2'-7"	10	6'-1"
7	3'-0"	11	7'-6"

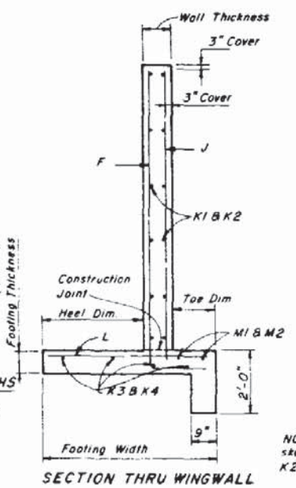

SECTION THRU WINGWALL

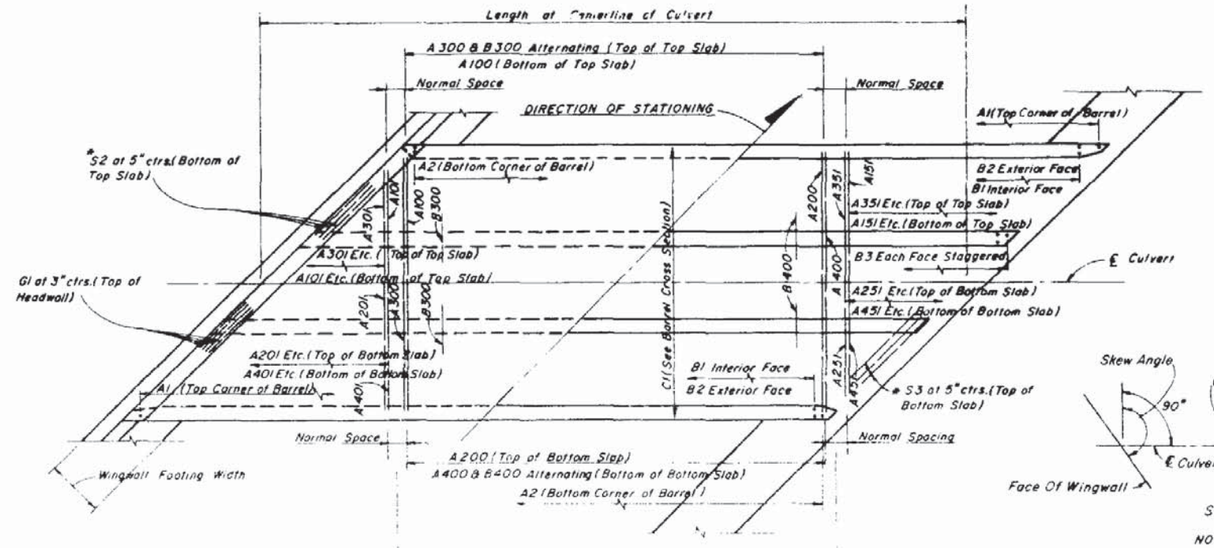

Slab Reinforcing Steel within these limits apply for the skewed portion of culvert slabs when the left wingwall is skewed.

Also the skewed portion of slabs at both ends of culverts when the left and right wingwalls are skewed the same.

Slab Reinforcing Steel within these limits apply for non-skewed culverts.

Also the non-skewed portion of culverts with one or two skewed wingwalls.

Slab Reinforcing Steel within these limits apply for the skewed portion of culvert slabs when the right wingwall only is skewed.

Also the skewed portion of slabs at the right end of culverts when the left and right wingwalls are both skewed but not the same.

PART PLAN TOP SLAB

NOTE: Skew for Computerized Culvert Design Only is the angle between a line perpendicular to the ℄ Culvert and the face of Wingwall measured clockwise.

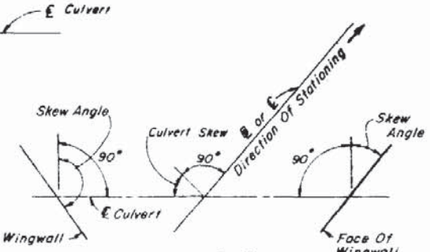

SKETCH "A"

NOTE: Normally Wingwalls are parallel to ℄ Roadway in the direction of stationing, for exceptions and the direction of skews see Roadway Plans.

PART PLAN BOTTOM SLAB

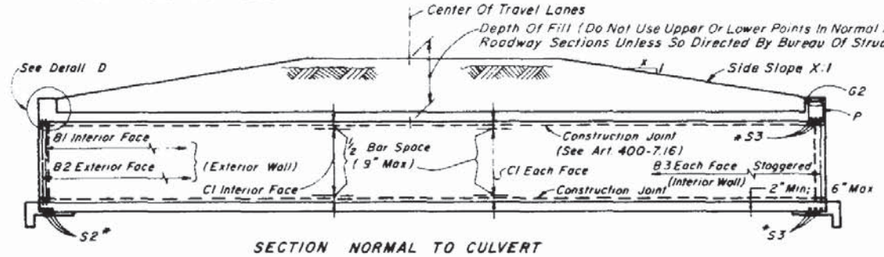

SECTION NORMAL TO CULVERT

NOTE: Depth of fill indicates distance from top of Finish Grade to bottom of Slab.

NOTE: The location of the first bar from the ends of the culvert shall not be less than 3" but not greater than one-half the bar spacing.

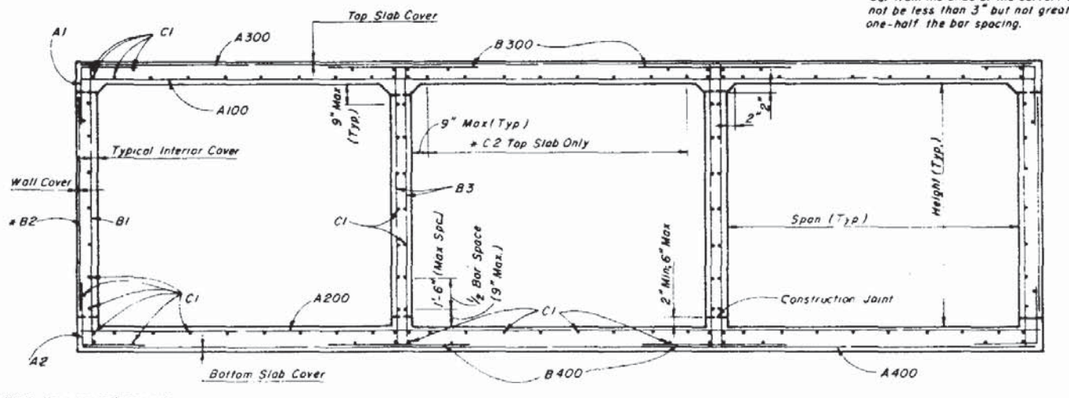

SECTION THRU BARREL

NOTE: When the wingwalls are not skewed with relation to the barrel, bars K2, K4 and M2 will not be utilized.

NOTE: Computerized Culvert Design applies to barrels with clear spans of 4 feet or greater and clear heights of 3 feet or greater.

GENERAL NOTES

DESIGN SPECIFICATIONS; A.A.S.H.T.O., 1977

LOADING, HS20-44, Modified for Military Loading as Required.

SURFACE FINISH; The Class Surface finish for all concrete surfaces shall be a general surface finish.

REINFORCING; Deformed welded wire fabric may be substituted for all or part of the reinforcing steel provided an equal area of steel is used and if the details are approved by the Engineer.

SKEWED CONSTRUCTION JOINT; Construction Joints in barrels at culverts with skewed wingwalls may be placed parallel to the wingwalls; and the reinforcing steel, in the slabs, may be cut provided that the cut reinforcing steel extends beyond the construction joint enough for splices to be made in accordance with the table (lower left) this sheet. The cost of construction joints shall be at the expense of the Contractor.

* REINFORCING BAR SCHEDULE:

A. When the depth of fill is less than or equal to 2.0 feet, Bars C2 are utilized in the bottom of the top slab. In all other cases, Bars C2 are replaced with Bars C1 spaced at 18 inches on centers.

B. When the skew angle for a side equals 0° ± 11° then the respective S Bars (S2 or S3) will not be utilized.

C. When the barrel height is less than 6 feet, Bars B2 shall be eliminated as shown in Detail E.

D. When the wingwalls are parallel, the following bars are equal in size, length and spacing; K1 = K2, K3 = K4, M1 = M2, G1 = G2, S2 = S3, A101 (etc.) = A151 (etc.), A201 (etc.) = A251 (etc.), A301 (etc.) = A351 (etc.), A401 (etc.) = A451 (etc.). Also, only Bars K1, K3, M1, G1, S2, A101 (etc.), A201 (etc.), A301 (etc.), and A401 (etc.) shall be listed in the Reinforcing Bar Schedule.

STATE OF FLORIDA DEPARTMENT OF TRANSPORTATION
ROAD DESIGN

CONCRETE BOX CULVERT
TRIPLE BARREL

	Names	Dates	Approved By
Designed by	C.W./A.M.M.	10-81	
Drawn by			
Checked by	R.D.S.	10-81	State Design Engineer, Roadways
F.H.W.A.	Approved: 9/23/82		

Revision No.	Sheet No.	Index No.
84	3 of 4	290

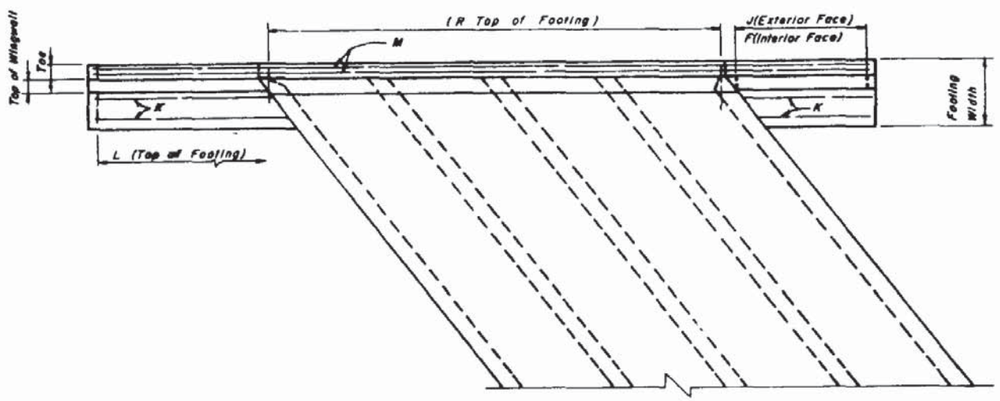

PART PLAN AT END OF CULVERT

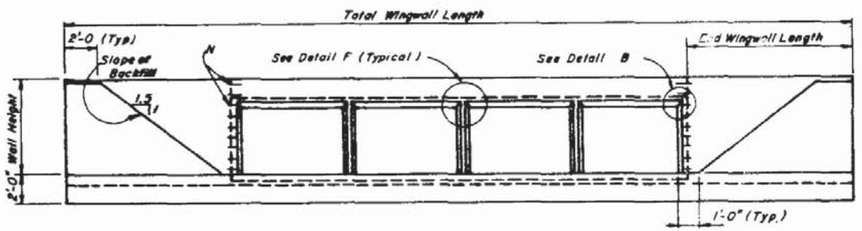

END ELEVATION

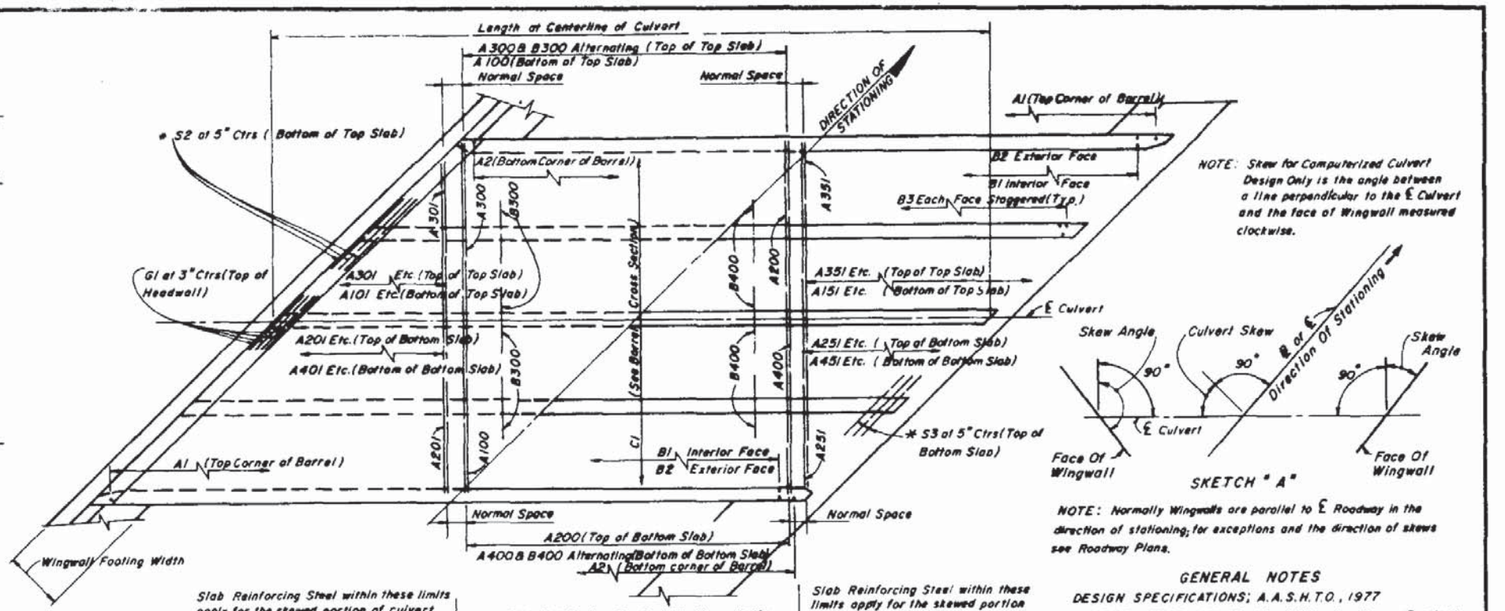

Slab Reinforcing Steel within these limits apply for the skewed portion of culvert slabs when the left wingwall is skewed.

Also the skewed portion of slabs at both ends of culverts when the left and right wingwalls are skewed the same.

Slab Reinforcing Steel within these limits apply for nonskewed culverts.

Also the nonskewed portion of culverts with one or two skewed wingwalls.

NOTE: Bars B300 & B400 Shall be Located at the ℄ of the interior walls.

Slab Reinforcing Steel within these limits apply for the skewed portion of culvert slabs when the right wingwall only is skewed.

Also the skewed portion of slabs at the right end of culverts when the left and right wingwalls are both skewed but not the same.

PART PLAN TOP SLAB

PART PLAN BOTTOM SLAB

NOTE: Skew for Computerized Culvert Design Only is the angle between a line perpendicular to the ℄ Culvert and the face of Wingwall measured clockwise.

SKETCH "A"

NOTE: Normally Wingwalls are parallel to ℄ Roadway in the direction of stationing; for exceptions and the direction of skews see Roadway Plans.

GENERAL NOTES

DESIGN SPECIFICATIONS; A.A.S.H.T.O., 1977

LOADING; HS20-44 Modified for Military Loading as Required.

SURFACE FINISH; The Class Surface finish for all concrete surfaces shall be a general surface finish.

REINFORCING; Deformed welded wire fabric may be substituted for all or part of the reinforcing steel provided an equal area of steel is used and if the details are approved by the Engineer.

SKEWED CONSTRUCTION JOINTS; Construction Joints in barrels of culverts with skewed wingwalls may be placed parallel to the wingwalls and the reinforcing steel, in the slabs, may be cut provided that the cut reinforcing steel extends beyond the construction joint enough for splices to be made in accordance with the table (lower left) this sheet. The cost of construction joints shall be at the expense of the Contractor.

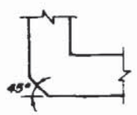

SECTION C-C

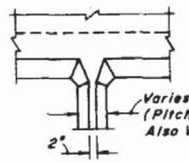

DETAIL F

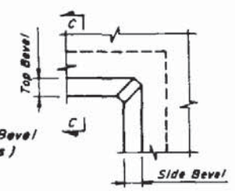

DETAIL B

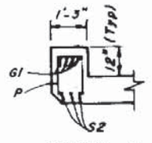

DETAIL D

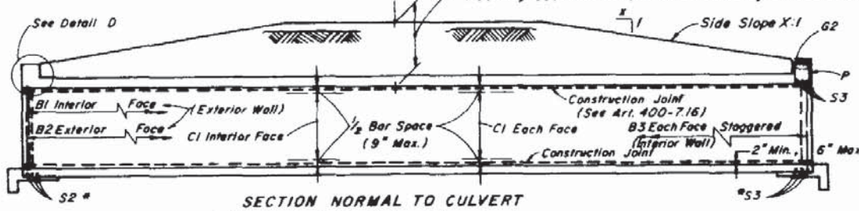

SECTION NORMAL TO CULVERT

NOTE: Depth of fill indicates distance from top of Finish Grade to bottom of top Slab.

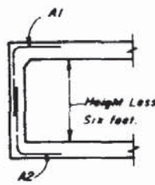

DETAIL E

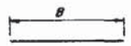

TYPE 1 BAR

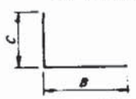

TYPE 10 BAR

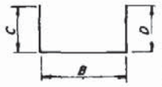

TYPE 11 BAR

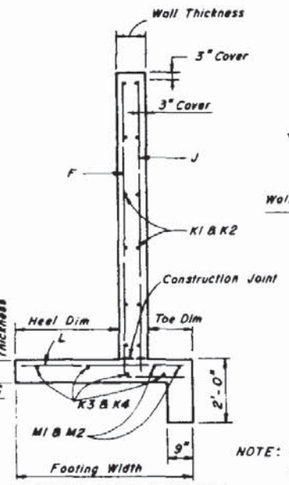

SECTION THRU WINGWALL

NOTE: When the wingwalls are not skewed with relation to the barrel bars K2, K4 and M2 will not be utilized.

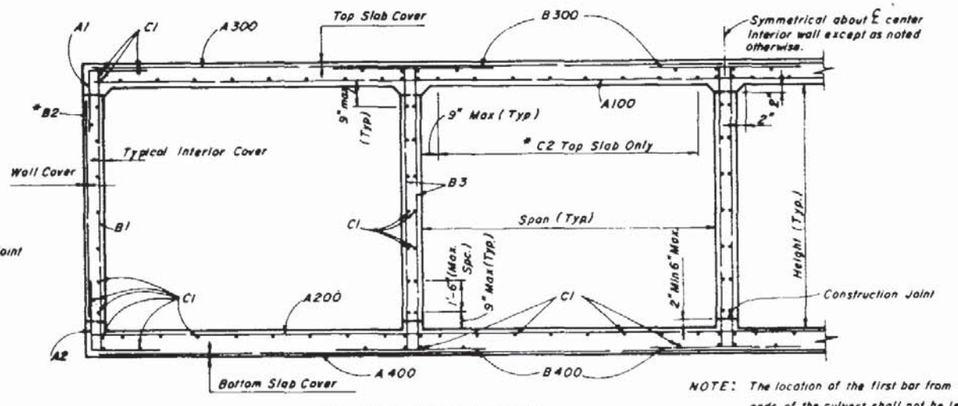

SECTION THRU BARREL

NOTE: The location of the first bar from the ends of the culvert shall not be less than 3", but not greater than one half the bar spacing.

* REINFORCING BAR SCHEDULE:

A. When the depth of fill is less than or equal to 2.0 feet, Bars C2 are utilized in the bottom of the top slab. In all other cases, Bars C2 are replaced with Bars C1 spaced at 18 inches on centers.

B. When the skew angle for a side equals 0°±11° then the respective S Bars (S2 or S3) will not be utilized.

C. When the barrel height is less than 6 feet, Bars B2 shall be eliminated as shown in Detail E.

D. When the wingwalls are parallel, the following bars are equal in size, length and spacing; K1 = K2, K3 = K4, M1 = M2, G1 = G2, S2 = S3, A101 (etc.) = A151 (etc.), A201 (etc.) = A251 (etc.), A301 (etc.) = A351 (etc.), A401 (etc.) = A451 (etc.). Also, only Bars K1, K3, M1, G1, S2, A101 (etc.), A201 (etc.), A301 (etc.) and A401 (etc.) shall be listed in the Reinforcing Bar Schedule.

NOTE: Computerized Culvert Design applies to barrels with clear spans of 4 feet or greater and clear heights of 3 feet or greater.

TABLE OF MINIMUM BAR SPLICE LENGTHS

BAR SIZE	SPLICE	BAR SIZE	SPLICE
4	1'-8"	8	3'-10"
5	2'-2"	9	4'-10"
6	2'-7"	10	6'-1"
7	3'-0"	11	7'-6"

STATE OF FLORIDA DEPARTMENT OF TRANSPORTATION
ROAD DESIGN

CONCRETE BOX CULVERT
QUADRUPLE BARREL

	Names	Dates
Designed by	C.W./A.M.M	10-81
Drawn by		
Checked by	R.D.S.	10-81
F.H.W.A. Approved 9/23/82		

Approved By
State Design Engineer, Roadways

Revision No.	Sheet No.	Index No.
84	4 of 4	290

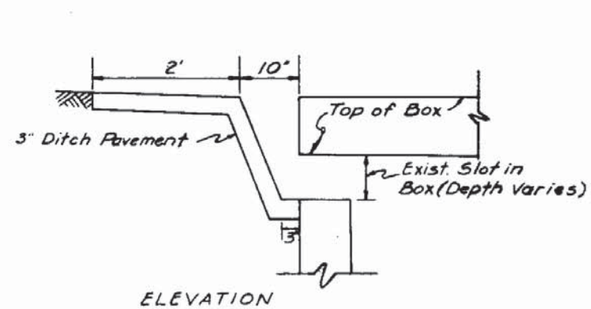

ELEVATION

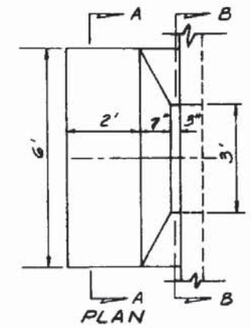

PLAN

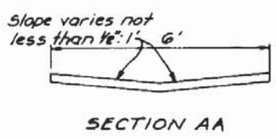

SECTION AA

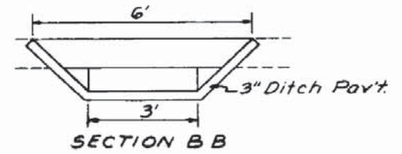

SECTION B B

SAFETY MODIFICATION FOR INLETS IN BOX CULVERTS

STATE OF FLORIDA DEPARTMENT OF TRANSPORTATION
ROAD DESIGN

SAFETY MODIFICATIONS FOR INLETS IN BOX CULVERTS

	Names	Dates
Designed by	HAB	7/67
Drawn by	MJT	7/67
Checked by	DWS	7/67
F.H.W.A. Approved: 3/20/75		

Approved By
Deputy Design Engineer, Roadways

Revision No.	Sheet No.	Index No.
81	1 of 1	293

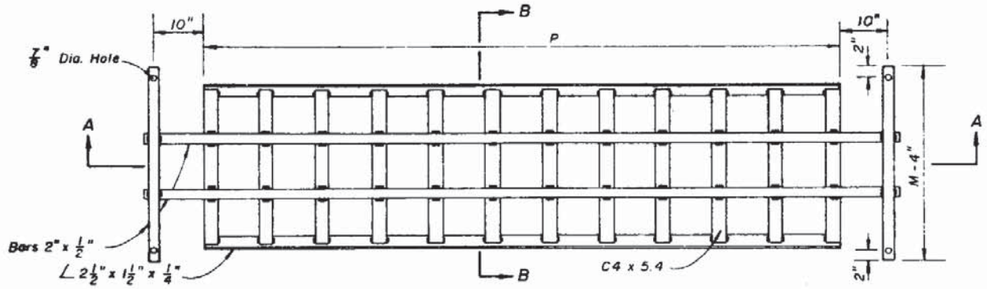

PLAN

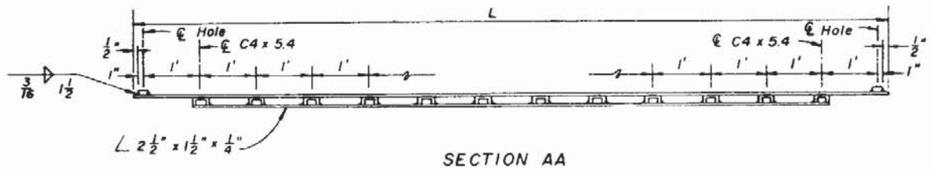

SECTION AA

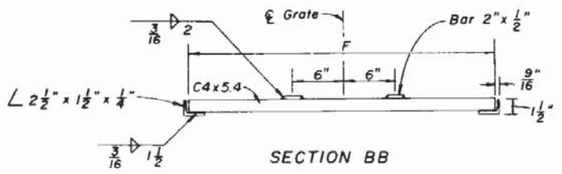

SECTION BB

GRATE DETAIL

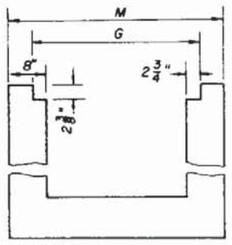

GRATE SEAT DETAIL

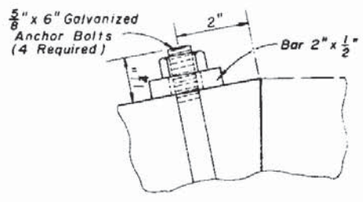

ANCHOR BOLT DETAIL

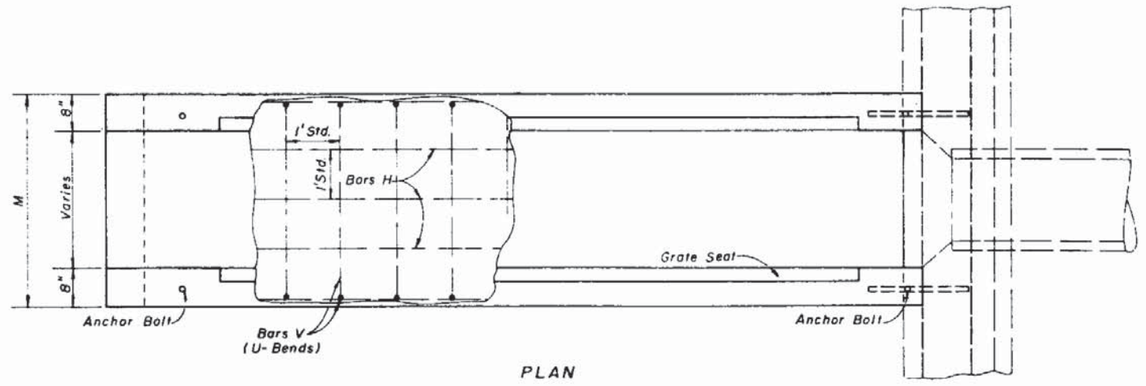

PLAN

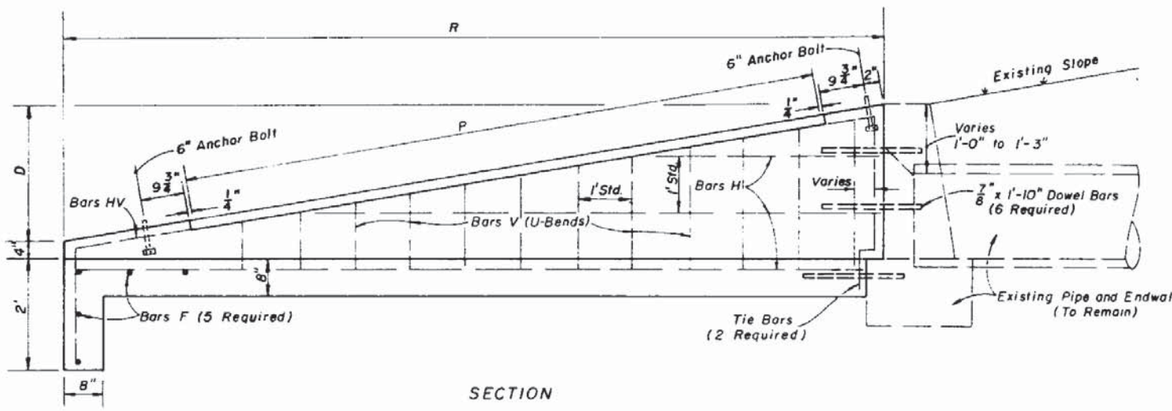

SECTION

GENERAL NOTES

1. For use criteria see "Steel Grating Use Criteria" Index No. 261.
2. Grates to be ASTM A588 weathering steel, except grates exposed to salt water shall be ASTM A572 Grade 50 steel and galvanized in accordance with Section 962-7 of the Standard Specifications, and shall be designated in the plans as Alternate G.
3. Channel section C3 x 6.0 may be substituted for the C4 x 5.4 channel.
4. All reinforcing No. 4 bars with 2" clearance except as noted. Spacings shown are center to center. Laps to be 12" minimum. Welded wire fabric (two cages max.) having an equivalent cross sectional area (0.20 sq. in.) may be substituted for bar reinforcement.
5. Drill 1 3/4" holes 8" deep with a rotary drill in existing endwall for dowel bars. Holes shall be thoroughly cleaned prior to placing dowel bars and epoxy.
6. Endwall to be paid for under the contract unit price for Class I Concrete (Endwalls) CY and Reinforcing Steel (Roadway) LB. Cost of dowel bars and epoxy mortar to be included in the contract unit price for reinforcing steel. Cost of grates to be paid for under the contract unit price for Endwall Grate LB., plan quantity. Cost of galvanized bolts and nuts to be included in the contract unit price for the grate.
7. Sod slopes 5' each side and above endwall. Sodding to be paid for under the contract unit price for Sodding SY.

DIMENSIONS AND QUANTITIES PER GRATE

Slope	Pipe Size	Channels @ 5.4 Lbs./L.F. Quantity	F	Lbs.	Bars @ 3.4 Lbs/L.F. (2 ea.) L	M-4"	Lbs.	Angles @ 3.2 Lbs./L.F.(2) P	Lbs.	Total Weight - Lbs.
6:1	15"	10	2'-6 7/8"	139	11'-3"	3'-3"	99	9'-4"	60	298
	18"	12	2'-9 1/8"	183	13'-3"	3'-6"	114	11'-4"	73	370
	24"	15	3'-3 1/8"	269	16'-3"	4'-0"	138	14'-4"	92	499
	30"	18	3'-9 1/8"	372	19'-3"	4'-6"	162	17'-4"	111	645
4:1	15"	6	2'-6 1/8"	83	7'-3"	3'-3"	71	5'-4"	34	188
	18"	7	2'-9 1/8"	107	8'-3"	3'-6"	80	6'-4"	41	228
	24"	9	3'-3 1/8"	161	10'-3"	4'-0"	97	8'-4"	53	311
	30"	11	3'-9 1/8"	227	12'-3"	4'-6"	114	10'-4"	66	407

DIMENSIONS AND QUANTITIES PER U-ENDWALL

Pipe Size	G	M	D	R	P	Class I Concrete-CY	Reinforcing Steel-Lbs.	Sodding S.Y.
15"	2'-8 1/2"	3'-7"	2'-2"	13'-0"	9'-4"	2.12	167	23
18"	2'-11 1/2"	3'-10"	2'-5"	14'-6"	11'-4"	2.53	173	25
24"	3'-5 1/2"	4'-4"	2'-11"	17'-6"	14'-4"	3.48	238	29
30"	3'-11 1/2"	4'-10"	3'-5"	20'-6"	17'-4"	4.57	315	32
15"	2'-8 1/2"	3'-7"	2'-2"	8'-8"	5'-4"	1.44	120	19
18"	2'-11 1/2"	3'-10"	2'-5"	9'-8"	6'-4"	1.72	130	20
24"	3'-5 1/2"	4'-4"	2'-11"	11'-8"	8'-4"	2.36	167	22
30"	3'-11 1/2"	4'-10"	3'-5"	13'-8"	10'-4"	3.09	225	25

STATE OF FLORIDA DEPARTMENT OF TRANSPORTATION
ROAD DESIGN

SAFETY MODIFICATIONS FOR ENDWALLS

Names	Dates
Designed by	
Drawn by	
Checked by	
F.H.W.A. Approved:	

Approved By: Jc Kuellal
Deputy Design Engineer, Roadways

Revision No.	Sheet No.	Index No.
86	1 of 1	295

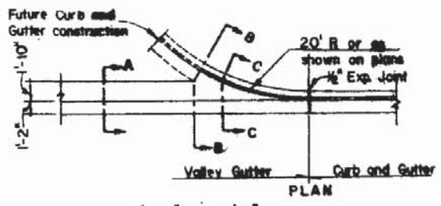

VALLEY GUTTER

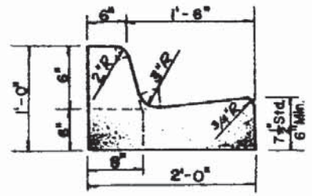

* Note (1) : When used on high side of roadways, the cross slope of the gutter shall match the cross slope of the adjacent pavement and the thickness of the lip shall be 6", unless otherwise shown on plans.

TYPE F

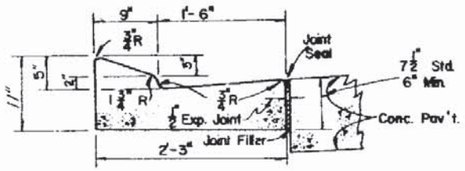

TYPE E

*See Note (1) Above.

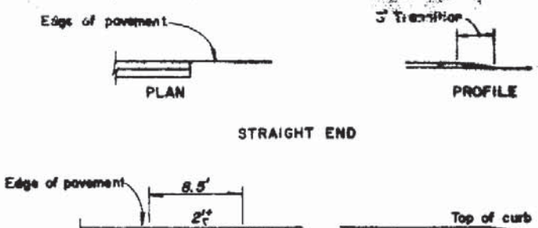

CURB TYPE A

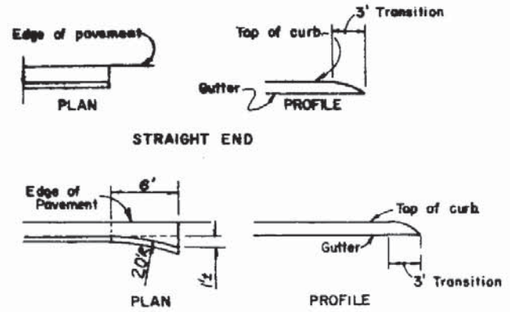

CURB AND GUTTER TYPES E & F

MEDIAN CURB AND GUTTER ENDINGS

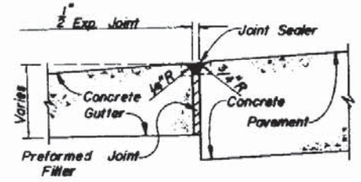

EXPANSION JOINT BETWEEN GUTTER AND CONCRETE PAVEMENT

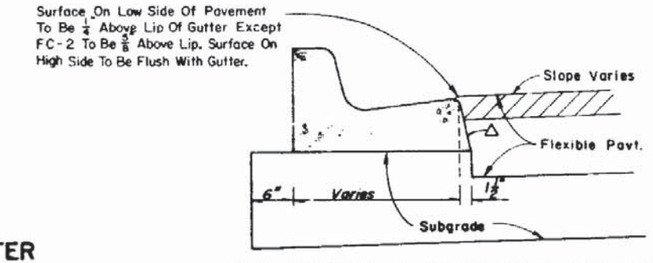

△ When curb and gutter, shoulder gutter, valley gutter and drop curb are constructed adjacent to flexible pavement, the face at the lip of the gutter shall be sloped as shown in this detail.

CURB AND GUTTER ADJACENT TO FLEXIBLE PAVEMENT

GENERAL NOTES

1. The curb and gutter details shown are for construction adjacent to concrete pavement, except as noted.
2. For curb, gutter and curb and gutter constructed adjacent to flexible pavement, the ½" expansion joint shown will not be used.
3. For curb, gutter, curb and gutter and traffic separators provide ⅛ – ¼ contraction joints at 10' centers(max.). Contraction joints adjacent to PCC pavement on tangents and flat curves are to match the pavement joints, with intermediate joints not to exceed 10' centers.
4. Ends of Curbs Types B and D shall transition from full to zero heights in 3 feet.

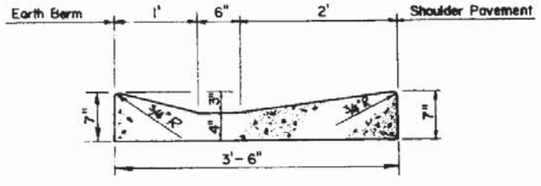

SHOULDER GUTTER

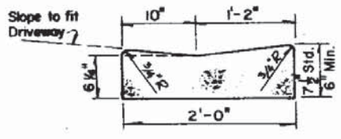

DROP CURB
*See Note (1) Above

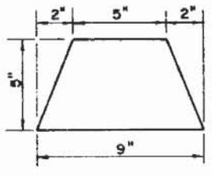

ASPHALTIC CONCRETE CURB

CONCRETE CURB AND GUTTER

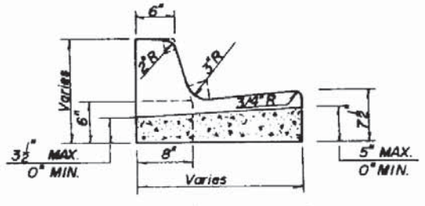

Note: See General Note No. 3

CONTRACTION JOINT IN CURB OR CURB AND GUTTER

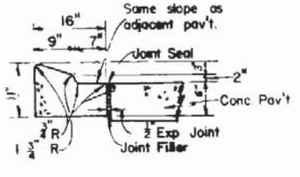

TYPE A

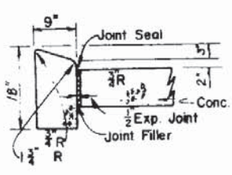

TYPE B

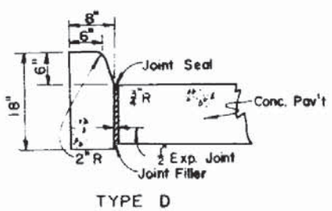

TYPE D

CONCRETE CURB

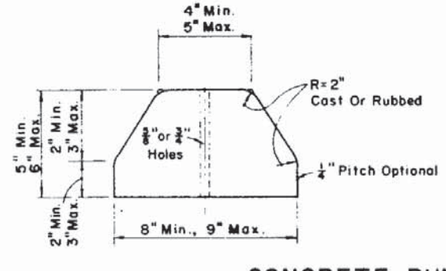

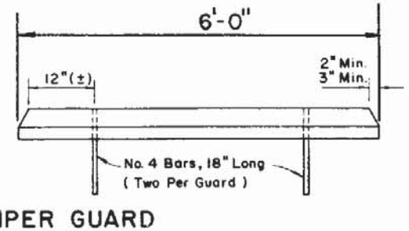

CONCRETE BUMPER GUARD

STATE OF FLORIDA DEPARTMENT OF TRANSPORTATION
ROAD DESIGN

CURB & CURB AND GUTTER

	Names	Dates
Designed by		
Drawn by		
Checked by		

Approved By
Deputy Design Engineer, Roadways

F.H.W.A. Approved : 7/7/75

Revision No.	Sheet No.	Index No.
86	1 of 1	300

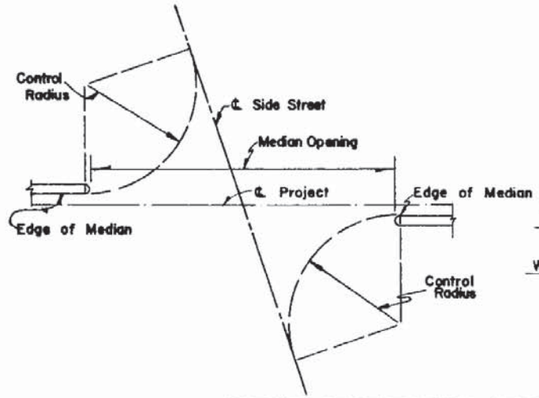

DESIGN VEHICLE	MEDIAN OPENING 90°	CONTROL RADIUS EDGE OF LANE
P	76	40'
SU	96	50'
WB-40&WB-50	146	75'

METHOD OF DETERMINING MEDIAN OPENINGS AT SKEWED SIDE STREETS

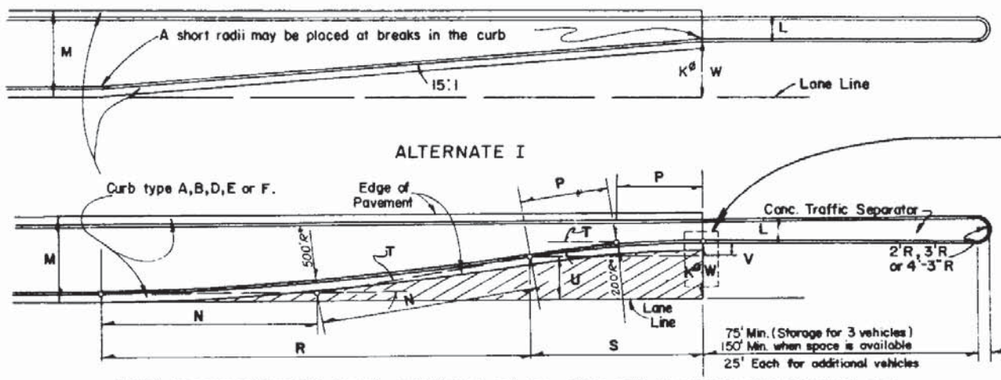

ALTERNATE I

* Radii are measured from face of curb, regardless of curb type. These radii are minimums recommended for urban construction. For rural primary construction, the radii are to be in conformity with the design speed of the highway where practicable.

* Dimensions K and W are identical except when median curb is type D or curb and gutter type F. Dimension K is from lane line to the face of curb. Dimension W is from lane line to traffic separator

ALTERNATE II

NOTE: HACHURED PORTION INDICATES AREA GIVEN IN TABLE BELOW

TABLE OF DIMENSIONS AND QUANTITIES FOR MEDIAN STORAGE LANES

L	M	CURB TYPE	N	P	R	S	T	U	V	K*	W	AREA SQ. FT.
4'	15'-6"	A	43.12'	17.25'	85.60'	34.24'	09° 51' 25.3"	7.96'	2.95'	10'-11"	10'-11"	529.8
		B	45.50'	18.20'	90.26'	36.10'	10° 24' 00.1"	8.21'	3.29'	11'-6"	11'-6"	622.1
		D	45.50'	18.20'	90.26'	36.10'	10° 24' 00.1"	8.38'	3.12'	11'-8"	11'-6"	622.0
		E	39.09'	15.63'	77.68'	31.07'	08° 56' 16.7"	7.57'	2.43'	10'-0"	10'-0"	395.2
		F	39.84'	15.94'	79.18'	31.67'	09° 06' 42.8"	7.81'	2.36'	10'-4"	10'-2"	418.6
4'	17'-6"	A	47.14'	18.86'	93.44'	37.38'	10° 46' 16.8"	9.39'	3.52'	12'-11"	12'-11"	690.2
		B	49.34'	19.73'	97.72'	39.09'	11° 16' 15.0"	9.64'	3.86'	13'-6"	13'-6"	790.5
		D	49.34'	19.73'	97.72'	39.09'	11° 16' 15.0"	9.81'	3.69'	13'-8"	13'-6"	790.4
		E	43.46'	17.39'	86.28'	34.51'	09° 56' 10.9"	9.00'	3.00'	12'-0"	12'-0"	542.1
		F	44.15'	17.66'	87.63'	35.05'	10° 05' 35.7"	9.24'	2.93'	12'-4"	12'-2"	568.0
6'	17'-6"	A	43.12'	17.25'	85.60'	34.24'	09° 51' 25.3"	7.96'	2.95'	10'-11"	10'-11"	529.8
		B	45.50'	18.20'	90.26'	36.10'	10° 24' 00.1"	8.21'	3.29'	11'-6"	11'-6"	622.1
		D	45.50'	18.20'	90.26'	36.10'	10° 24' 00.1"	8.38'	3.12'	11'-8"	11'-6"	622.0
		E	39.09'	15.63'	77.68'	31.07'	08° 56' 16.7"	7.57'	2.43'	10'-0"	10'-0"	395.2
		F	39.84'	15.94'	79.18'	31.67'	09° 06' 42.8"	7.81'	2.36'	10'-4"	10'-2"	418.6
6'	19'-6"	A	47.14'	18.86'	93.44'	37.38'	10° 46' 16.8"	9.39'	3.52'	12'-11"	12'-11"	690.2
		B	49.34'	19.73'	97.72'	39.09'	11° 16' 15.0"	9.64'	3.86'	13'-6"	13'-6"	790.5
		D	49.34'	19.73'	97.72'	39.09'	11° 16' 15.0"	9.81'	3.69'	13'-8"	13'-6"	790.4
		E	43.46'	17.39'	86.28'	34.51'	09° 56' 10.9"	9.00'	3.00'	12'-0"	12'-0"	542.1
		F	44.15'	17.66'	87.63'	35.05'	10° 05' 35.7"	9.24'	2.93'	12'-4"	12'-2"	568.0
8'-6"	22'-0"	A	47.14'	18.86'	93.44'	37.38'	10° 46' 16.8"	9.39'	3.52'	12'-11"	12'-11"	690.2
		B	49.34'	19.73'	97.72'	39.09'	11° 16' 15.0"	9.64'	3.86'	13'-6"	13'-6"	790.5
		D	49.34'	19.73'	97.72'	39.09'	11° 16' 15.0"	9.81'	3.69'	13'-8"	13'-6"	790.4
		E	43.46'	17.39'	86.28'	34.51'	09° 56' 10.9"	9.00'	3.00'	12'-0"	12'-0"	542.1
		F	44.15'	17.66'	87.63'	35.05'	10° 05' 35.7"	9.24'	2.93'	12'-4"	12'-2"	568.0

Note: The table above is applicable only where median storage lanes occur on tangent construction.

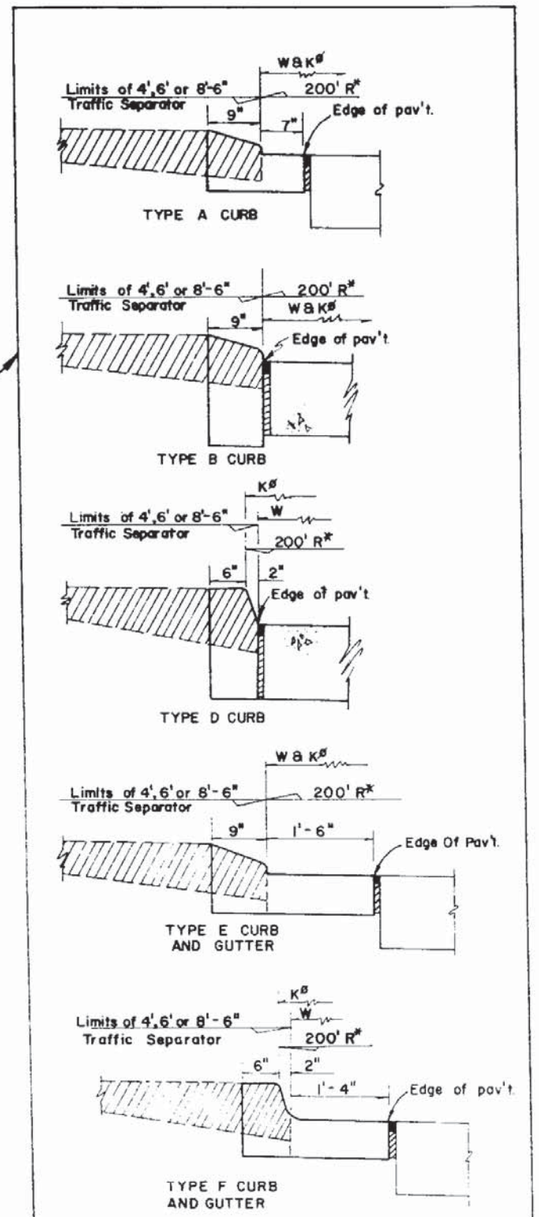

JUNCTURE DETAILS

MEDIAN CURBS AND TRAFFIC SEPARATORS

STATE OF FLORIDA DEPARTMENT OF TRANSPORTATION
ROAD DESIGN

MEDIAN STORAGE LANES

	Names	Dates
Designed by		
Drawn by	SHG	6/73
Checked by	AF	6/73
F.H.W.A. Approved		7/7/75

Approved By: Deputy Design Engineer, Roadways

Revision No.	Sheet No.	Index No.
86	1 of 1	301

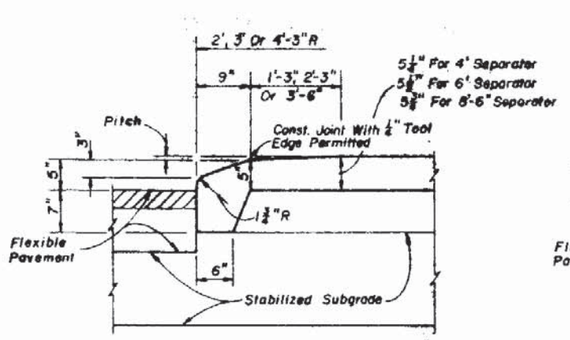

LONGITUDINAL SECTION (NOSE)

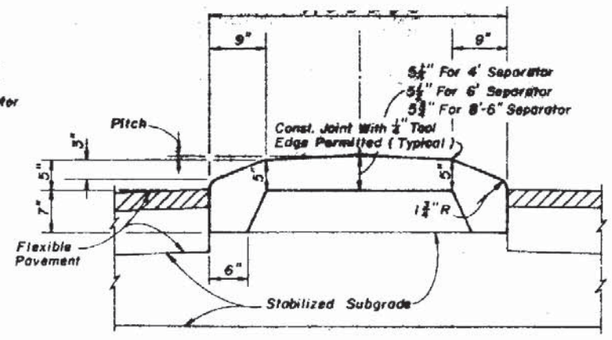

TRANSVERSE SECTION

OPTION I

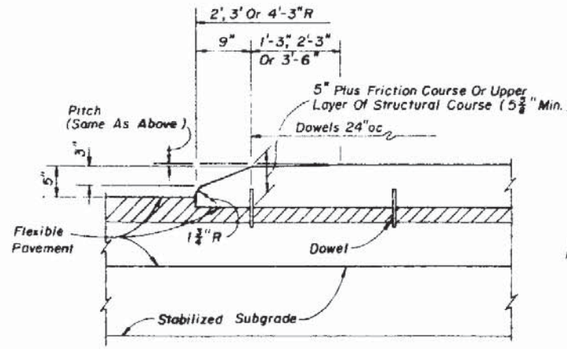

LONGITUDINAL SECTION (NOSE)

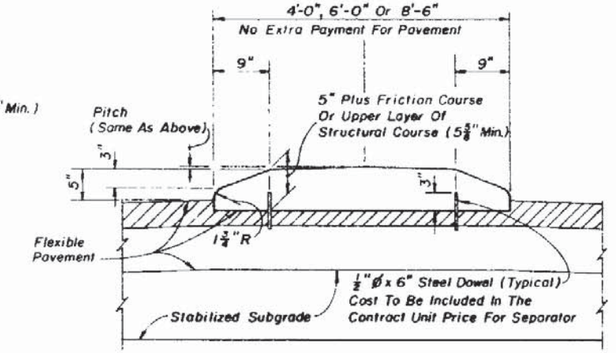

TRANSVERSE SECTION

OPTION II

TYPE I CONCRETE TRAFFIC SEPARATOR

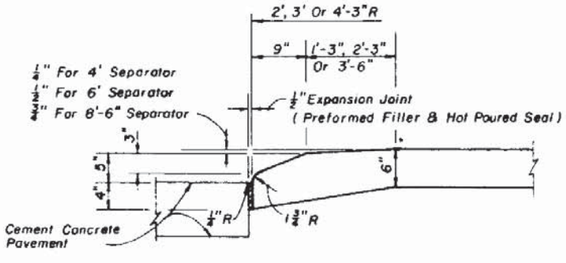

LONGITUDINAL SECTION (NOSE)

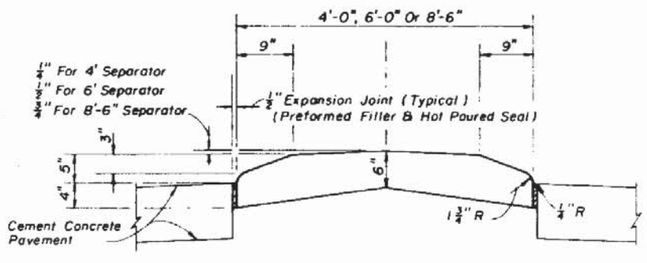

TRANSVERSE SECTION

TYPE II CONCRETE TRAFFIC SEPARATOR

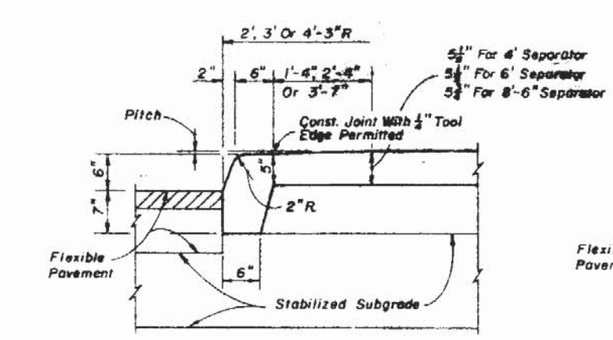

LONGITUDINAL SECTION (NOSE)

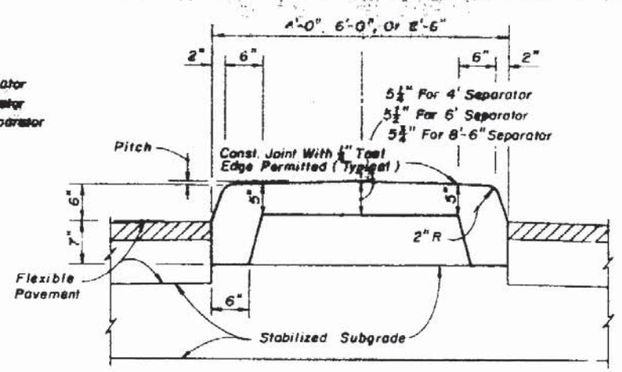

TRANSVERSE SECTION

OPTION I

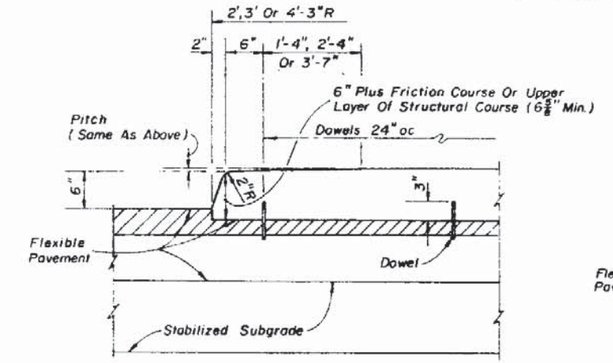

LONGITUDINAL SECTION (NOSE)

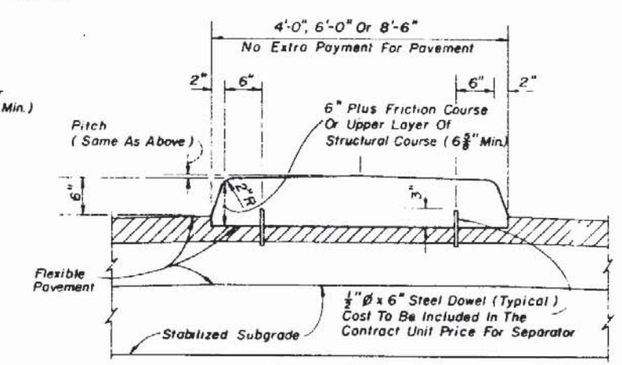

TRANSVERSE SECTION

OPTION II

TYPE IV CONCRETE TRAFFIC SEPARATOR

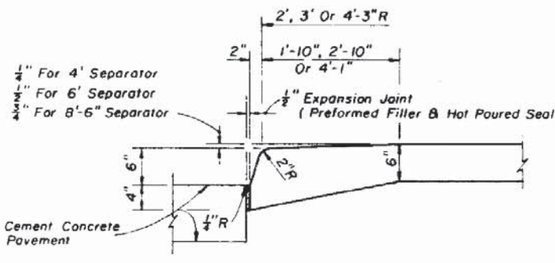

LONGITUDINAL SECTION (NOSE)

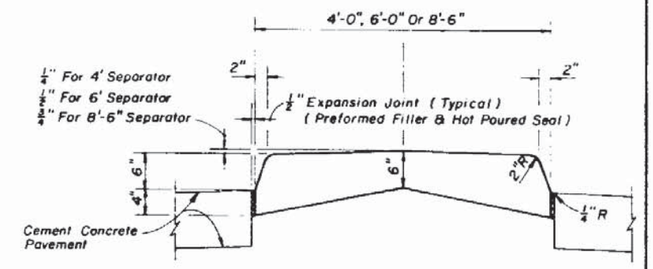

TRANSVERSE SECTION

TYPE V CONCRETE TRAFFIC SEPARATOR

NOTES

1. Separators Types I and IV are to be used with flexible pavement. Separators Types II and V are to be used with rigid pavement.
2. Either Option I or Option II may be used for Types I and IV separators except when a specific option is called for in the plans.
3. Separators having widths other than 4', 6' or 8'-6" shall be detailed in the plans as special separators and paid for under the contract unit price for either Concrete Traffic Separator (Special) (__' Wide) LF or (Special)(VW) SY.

STATE OF FLORIDA DEPARTMENT OF TRANSPORTATION
ROAD DESIGN

TRAFFIC SEPARATORS

	Names	Dates
Designed by		
Drawn by	HSD	9/81
Checked by	JVG	9/81
F.H.W.A.	Approved: 9/23/82	

Approved By
Deputy Design Engineer, Roadways

Revision No.	Sheet No.	Index No.
83	1 of 1	302

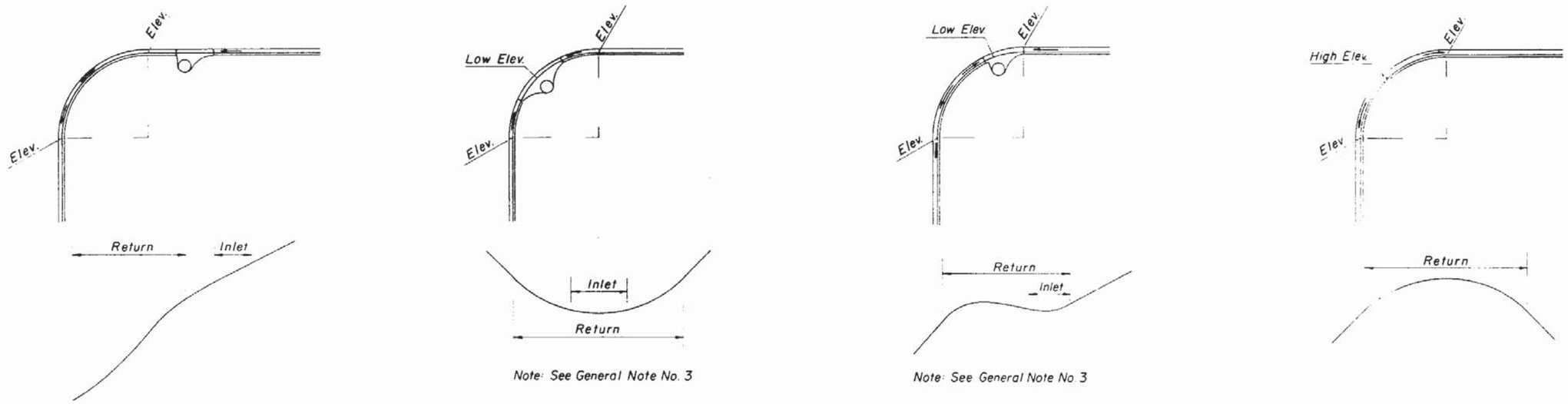

Note: See General Note No. 3

Note: See General Note No. 3

TYPICAL RETURN PROFILES

INCLUDING DETAIL SHOWING LOCATION OF INLETS ON RETURN

NOTE:

1. On normal intersections, profiles need not be included in the plans as the above typicals adequately present the desired configuration.
2. For major intersections, where extreme grades are involved or where it is deemed necessary to included profiles in order to present adequate design data; return profiles may be included in the plans.
3. Profile grades should be established that will allow inlets to be located outside the return whenever practical. Inlets should be located to avoid conflict with pedestrian movement. Special care must be exercised to prevent conflict with curb cut ramps for the physically handicapped. For information on curb cut ramps refer to Index No. 304.
4. Grades of 0.2% or greater should be maintained on sag profiles outside the inlet limits.

STATE OF FLORIDA DEPARTMENT OF TRANSPORTATION
ROAD DESIGN

CURB RETURN PROFILES

	Names	Dates	Approved By
Designed by			Deputy Design Engineer, Roadways
Drawn by			
Checked by			
Approved		7/7/75	

Revision No.	Sheet No.	Index No.
86	1 of 1	303

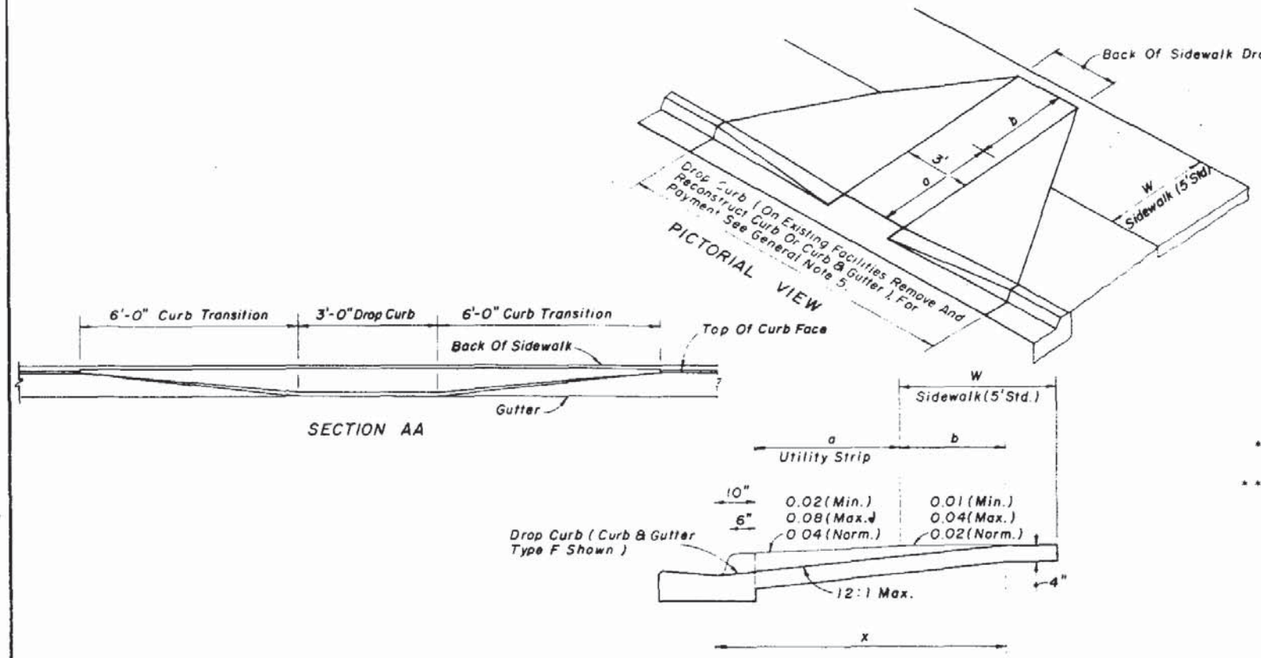

W	a	W + a + 10"	x	b
5'	0'	5.8'	5.8'	5.0'*
6'	0'	6.8'	6.8'	6.0'**
7'	0'	7.8'	7.3'	6.5'**
8'	0'	8.8'	7.3'	6.5'**
5'	2.0'	7.8'	7.8'	5.0'
5'	2.5'	8.3'	8.1'	4.8'
5'	3.0'	8.8'	8.3'	4.4'
5'	3.5'	9.3'	8.4'	4.1'
5'	4.0'	9.8'	8.6'	3.8'
5'	4.5'	10.3'	8.7'	3.4'
5'	5.0'	10.8'	8.9'	3.1'

b = x - (a + 10")

b = Distance from front edge of sidewalk to back point of 12:1 slope.

* Back of sidewalk drop required for all sidewalk slopes.

** Back of sidewalk drop required for sidewalk slopes 0.04 and part 0.02.

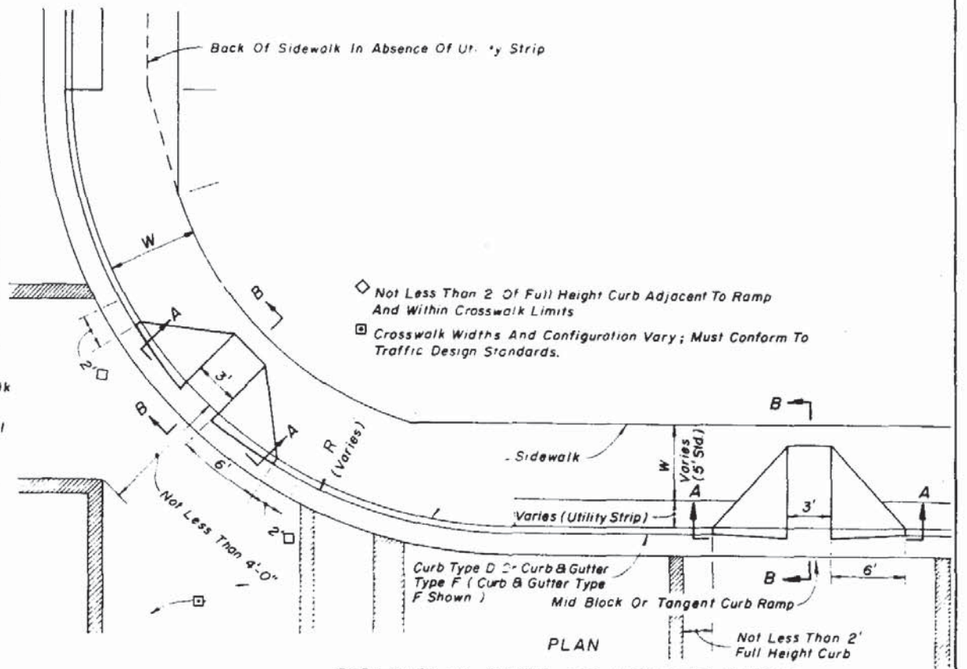

SIDEWALK RAMPS

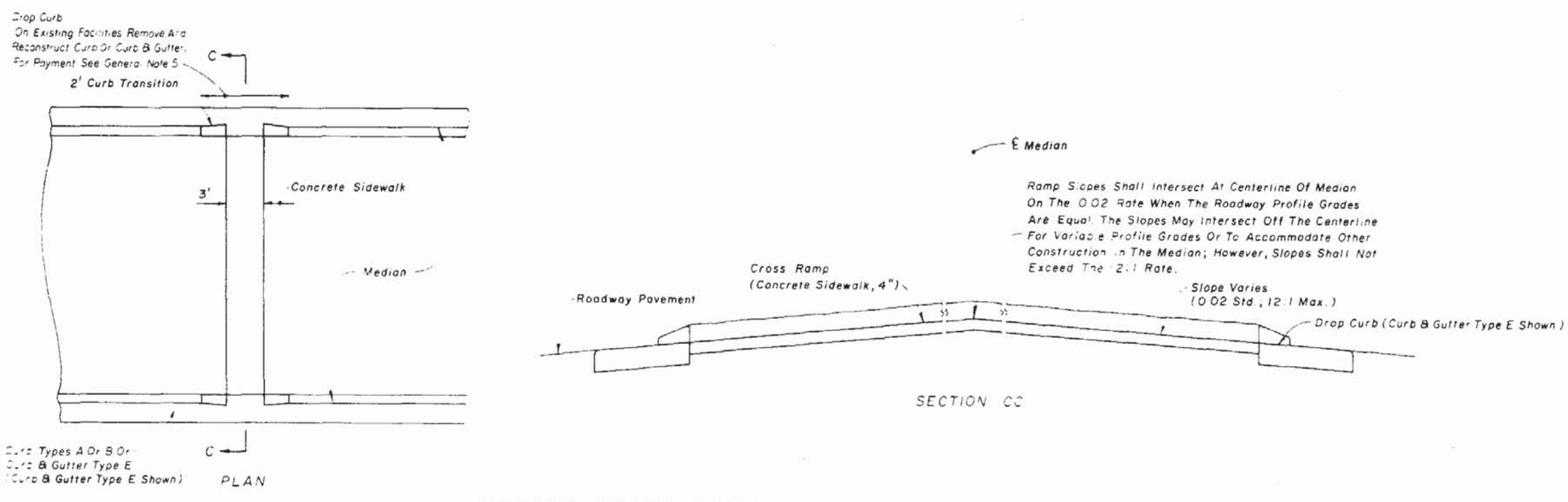

MEDIAN CROSS RAMP

STATE OF FLORIDA DEPARTMENT OF TRANSPORTATION
ROAD DESIGN

CURB CUT RAMPS
PHYSICALLY HANDICAPPED

	Names	Dates	Approved By
	R&R	4/83	Deputy Design Engineer, Roadways
		4/83	Revision No.
	Approved	10/6/83	86

Sheet No. 1 of 2 Index No. 304

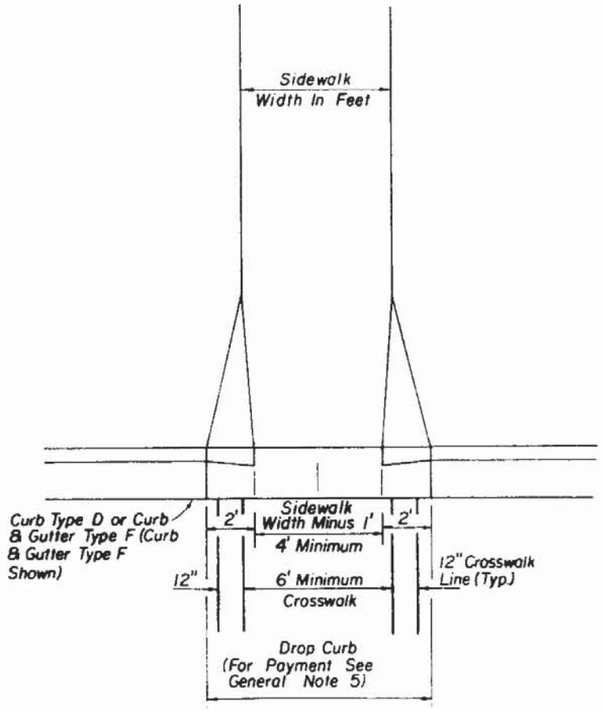

PLAN VIEW

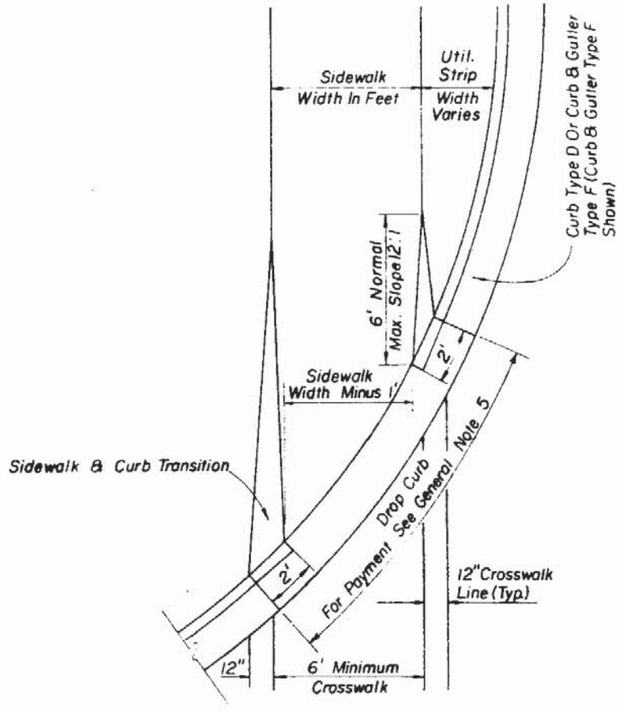

PLAN VIEW

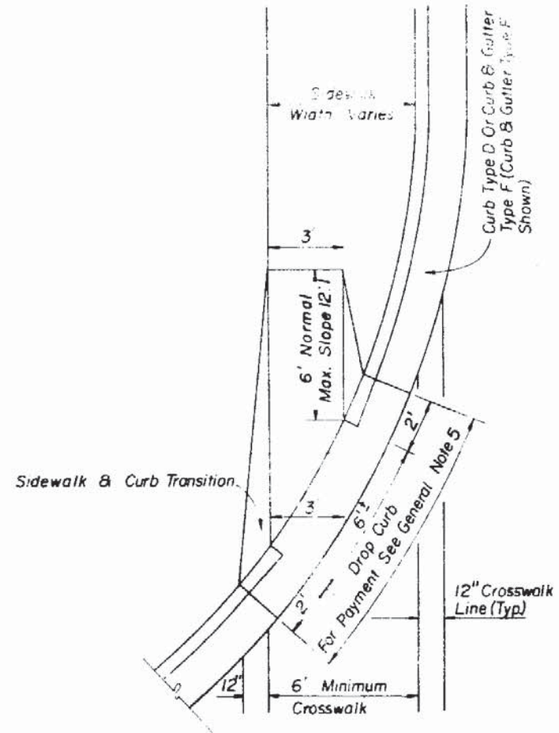

PLAN VIEW

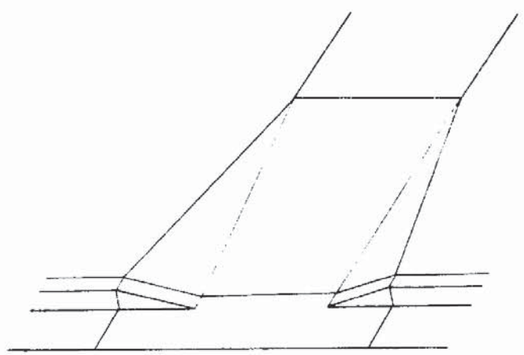

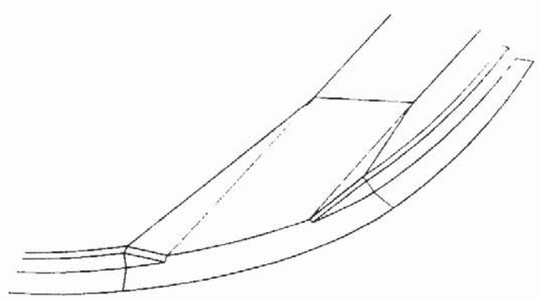

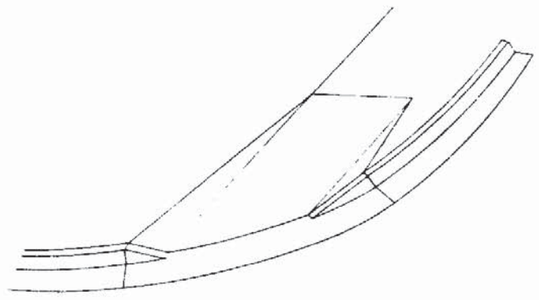

GENERAL NOTES

1. Ramps locations are to be coordinated with and in conformance with crosswalk marking details as shown in the plans.
2. If a curb ramp is located where pedestrians must walk across the ramp, then it shall have flared sides; the maximum slope of the flare shall be 12:1 See sheet 1 of 2.
   Curb ramps with returned curbs may be used where pedestrians would not normally walk across the ramp.
3. Ramps shall have a tactile surface, textured to a depth not exceeding $\frac{1}{8}$" by use of a tamp or roller fabricated with an imprinting surface of either 1" Mesh 0.250 wire cloth (plain weave, conventional crimp), 1$\frac{1}{2}$" # 6 expanded metal (standard) or 3 lb. expanded metal grating.
4. Ramps to be constructed at all locations shown in the plans even when sidewalk is not constructed concurrently.
5. Ramps to be paid for as follows:
   Drop curb to be paid for under the contract unit price for Conc. Curb (Type ___), L.F. or Conc. Curb and Gutter (Type___), L.F. (On existing facilities removal of curb or curb and gutter to be included in the cost of curb or curb and gutter.).
   Ramp to be paid for under the contract unit price for Concrete Sidewalk (___), SY. (On existing facilities removal of sidewalk to be included in the cost of concrete sidewalk.).

FOR TRANSVERSE PEDESTRIAN TRAFFIC SEE SHEET 1 OF 2

RAMPS FOR LINEAR PEDESTRIAN TRAFFIC

STATE OF FLORIDA DEPARTMENT OF TRANSPORTATION
ROAD DESIGN

CURB CUT RAMPS
PHYSICALLY HANDICAPPED

Designed by	Approved By
Drawn by	Deputy Design Engineer, Roadways
Checked by	
F.H.W.A. Approved 2/8/79	Revision No. 86 · Sheet No. 2 of 2 · Index No. 304

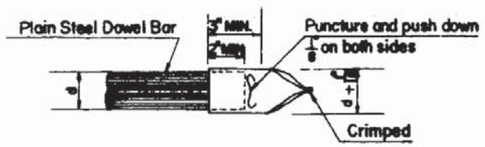

METAL CAPS FOR DOWEL BARS

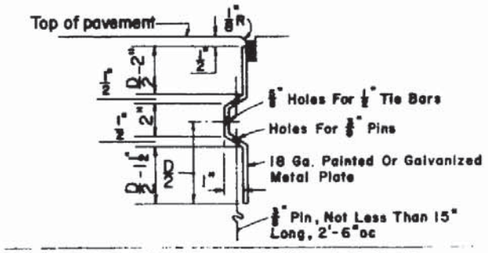

DEFORMED METAL PLATE

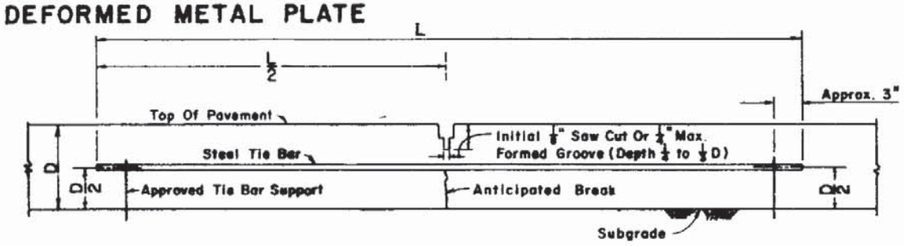

Note: Slabs poured simultaneously. Tie bars may be inserted in the plastic concrete by means approved by the Engineer.

LONGITUDINAL LANE - TIE JOINT

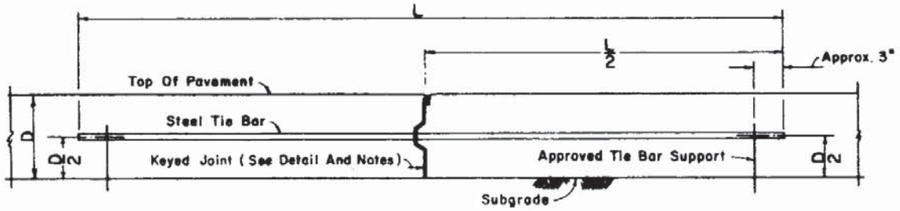

Note: The keyed joint may be formed by either the metal plate detailed above; by bolting shaped timber to the side form; or, by extrusion from slip-form paver. Alternate keyway shape and tie bar details may be approved by the Engineer. Keyway not required when the concrete pavement is placed on an Econocrete Base.

LONGITUDINAL CONSTRUCTION JOINT

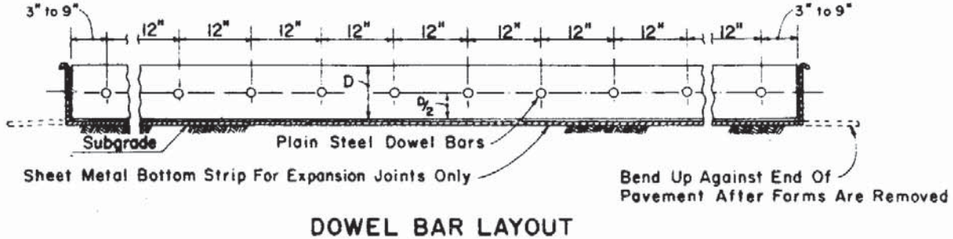

DOWEL BAR LAYOUT

NOTE: For joint dimensions see Sheet 2 of 4.

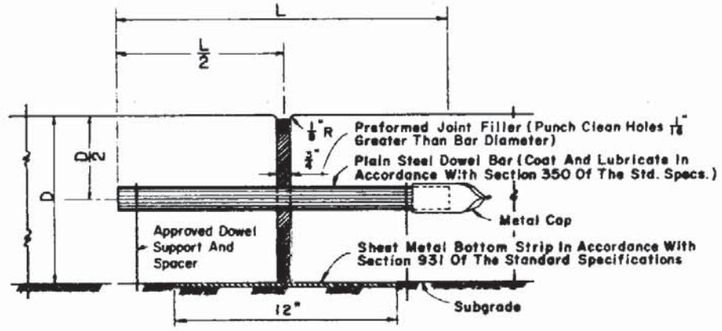

TRANSVERSE EXPANSION JOINT

EXPANSION JOINTS TO BE PLACED AT JUNCTIONS WITH APPROACH SLAB, AT STREET INTERSECTIONS AND OTHER LOCATIONS INDICATED IN DETAIL PLANS.

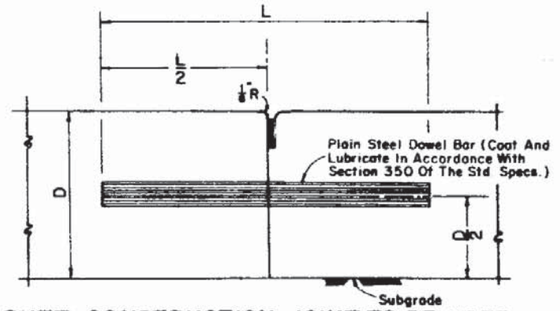

BUTT CONSTRUCTION JOINT TO BE USED AT DISCONTINUANCES OF WORK

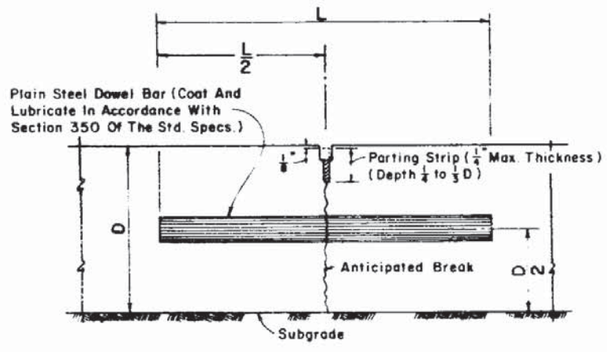

TRANSVERSE CONTRACTION JOINT, VIBRO CAST METHOD

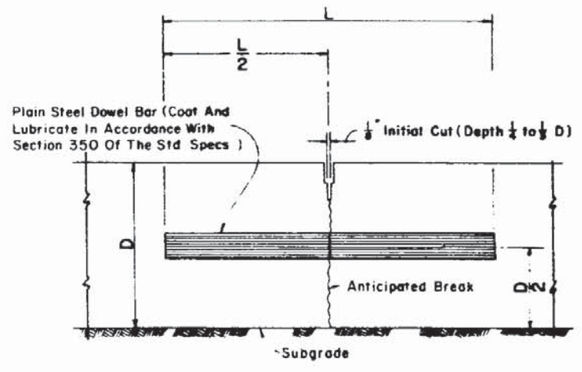

TRANSVERSE CONTRACTION JOINT, SAWED METHOD

Transverse Contraction Joints To Be Spaced At Maximum 20' And Dowels Required At All Transverse Contraction Joints Unless Otherwise Noted In Plans.

TIE BAR SPACING WITH MAXIMUM DISTANCE TO FREE EDGE 12'		
Pavement Thickness "D"	Maximum Spacing	
	No.4 Bars Length 25"	No.5 Bars Length 30"
6"	48"	48"
7"	45"	48"
8"	40"	48"
9"	35"	48"
10"	32"	48"
11"	29"	45"
12"	26"	41"

DOWELS (LENGTH 18")	
Pavement Thickness "D"	Diameter
6"	1"
7"	1"
8"	1"
9"	1 1/4"
10"	1 1/4"
11"	1 1/4"
12"	1 1/4"

STATE OF FLORIDA DEPARTMENT OF TRANSPORTATION
ROAD DESIGN

CONCRETE PAVEMENT JOINTS

	Names	Dates
Designed by		
Drawn by	HW	8/57
Checked by	HEC	8/57
F. - H. A. Approved		10/7/80

Approved By
Deputy Design Engineer, Roadways

Rev. & or No.	Sheet No.	Index No.
85	1 of 4	305

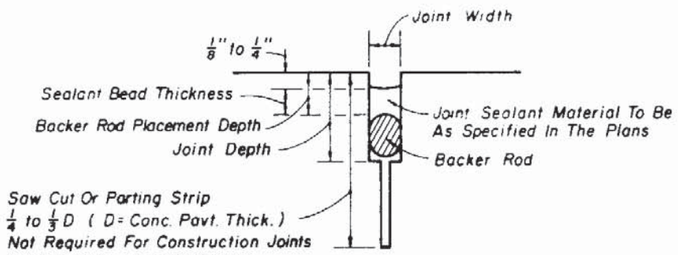

JOINT DIMENSIONS (INCHES)				
JOINT WIDTH	SEALANT BEAD THICKNESS	BACKER ROD DIAMETER	MINIMUM JOINT DEPTH	BACKER ROD PLACEMENT DEPTH
1/4	1/4	3/8	1	1/2
3/8	1/4	1/2	1 1/4	1/2
1/2	1/4	5/8	1 1/4	1/2
5/8	5/16	3/4	1 1/2	9/16
3/4	3/8	1	1 3/4	5/8
7/8	7/16	1 1/8	1 3/4	11/16
1	1/2	1 1/4	2	3/4
>1	1/2	1 1/4 +	2 +	3/4

Unless otherwise indicated on the plans the joint width for new construction will be 1/4" for construction joints not requiring the initial sawcut, 3/8" for all other joints. For rehabilitation projects the joint width will be shown on the plans or established by the Engineer based on field conditions.

FOR NEW AND REHABILITATION PROJECTS

BACKER ROD BOND BREAKER

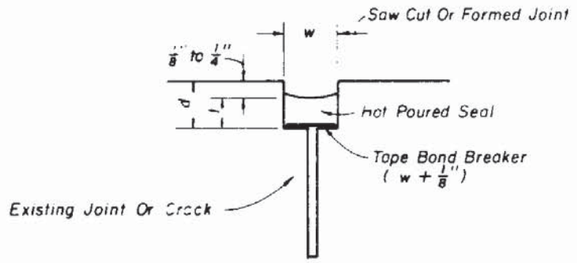

Note: Dimension w will be shown in the plans or established by the Engineer based on field conditions. Dimension d will be constructed so that the shape factor w/d has a maximum value of 2.0 and a minimum value of 1.0.

FOR REHABILITATION PROJECTS

TAPE BOND BREAKER

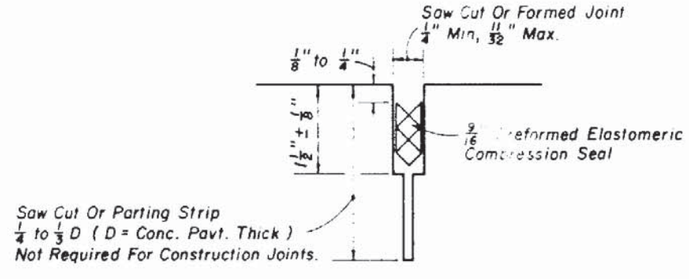

PREFORMED ELASTOMERIC COMPRESSION SEAL

JOINT DIMENSIONS

STATE OF FLORIDA DEPARTMENT OF TRANSPORTATION
ROAD DESIGN

CONCRETE PAVEMENT JOINTS

	Names	Dates
Designed by	WNL	9/7/84
Checked by	HSD	9/7/84
Checked by	WNL	9/7/84
F.H.W.A.	Approved	9/21/84

Approved By

State Design Engineer, Roadways

Revision No.	Sheet No.	Index No.
85	2 of 4	305

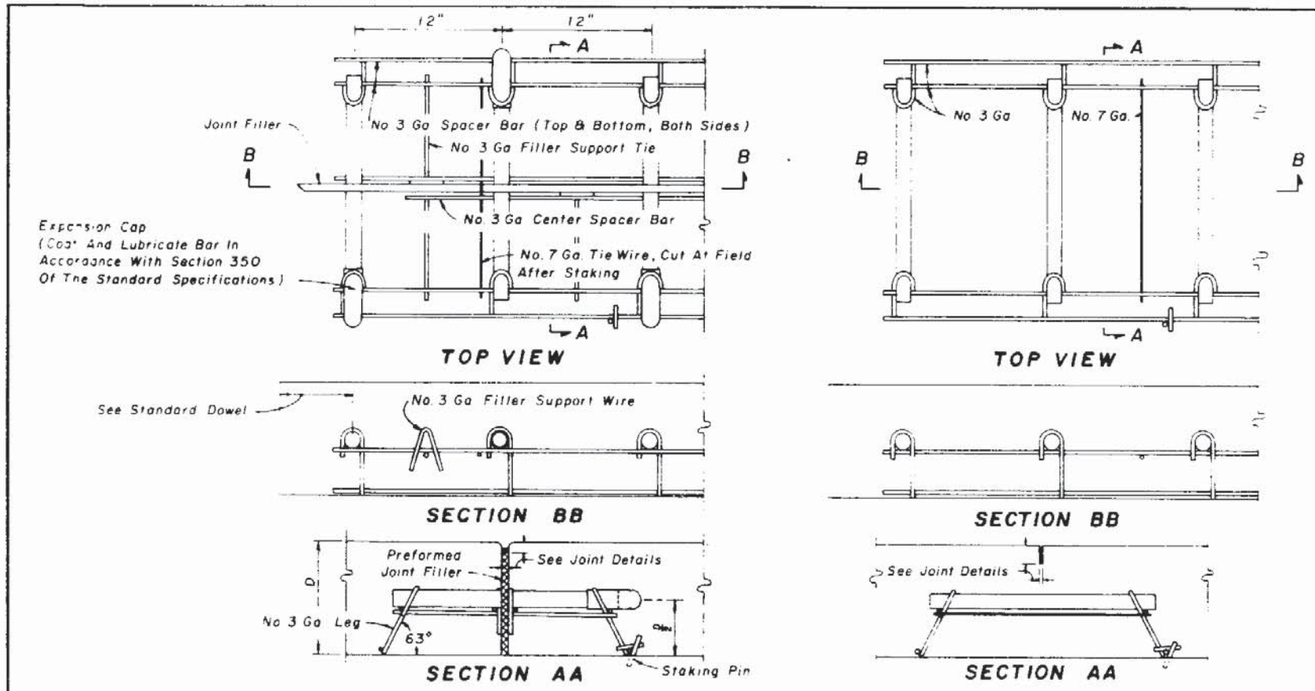

WADY INDUSTRIES, INC.

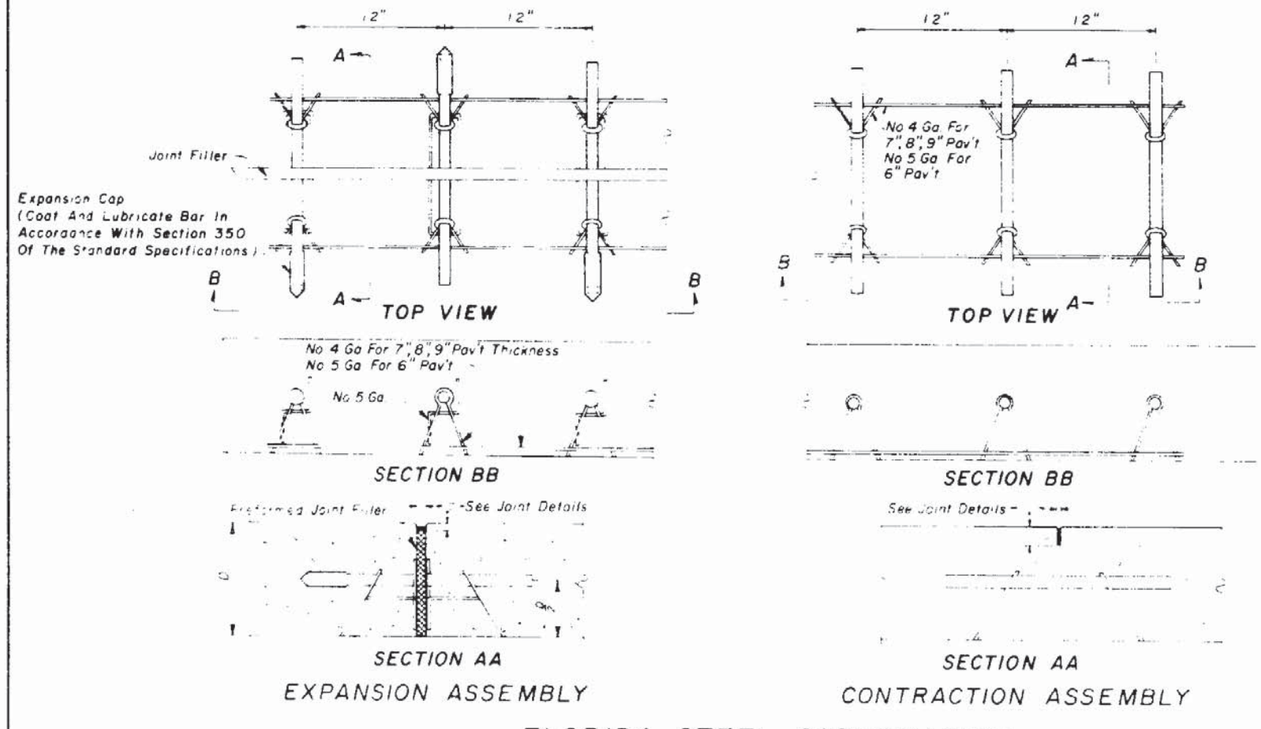

FLORIDA STEEL CORPORATION

DOWEL ASSEMBLIES FOR EXPANSION AND CONTRACTION JOINTS

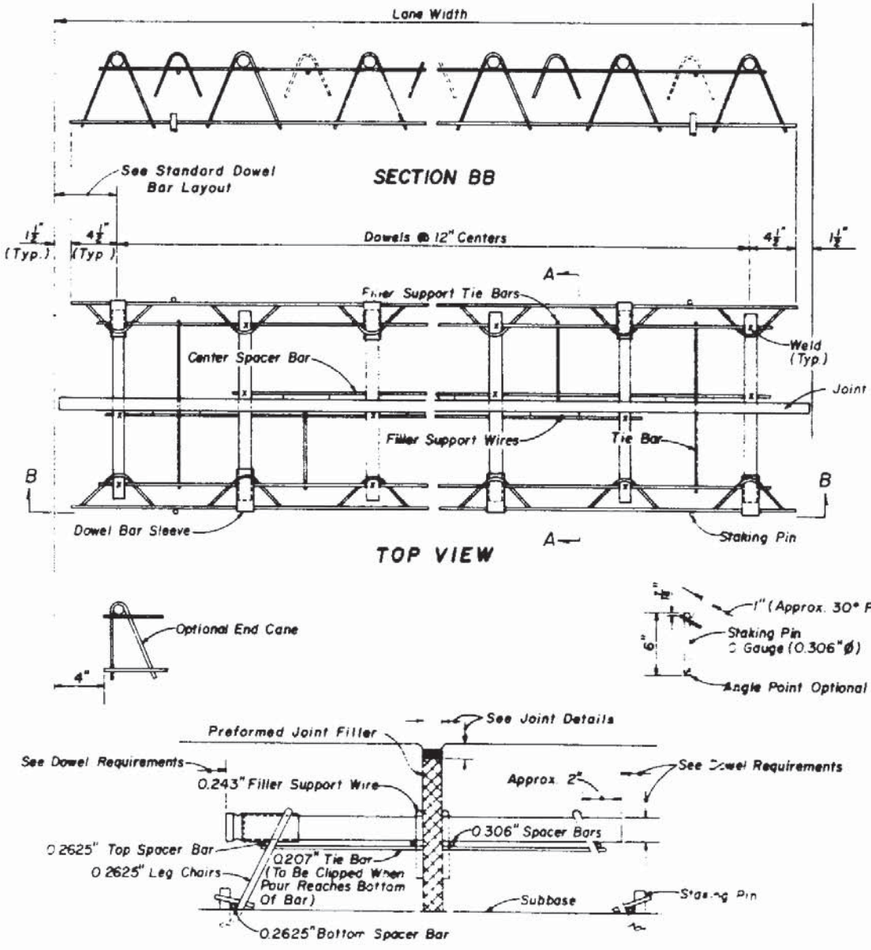

EXPANSION AND CONTRACTION ASSEMBLY *

* Expansion assembly is illustrated. For contraction assembly omit expansion joint material, center spacer bars, filler support wires, support tie bars and dowel bar sleeves.

THE DAYTON SURE GRIP AND SHORE COMPANY

STATE OF FLORIDA DEPARTMENT OF TRANSPORTATION
ROAD DESIGN

CONCRETE PAVEMENT JOINTS

	Name	Date
Detailed by		
Drawn by	JAC	9/81
Checked by	JVS	9/81
F.H.W.A. Approves		12/7/80

Approved By: V.C. Buckland, Deputy Design Engineer, Roadways

Revision No	Sheet No	Index No
85	3 of 4	305

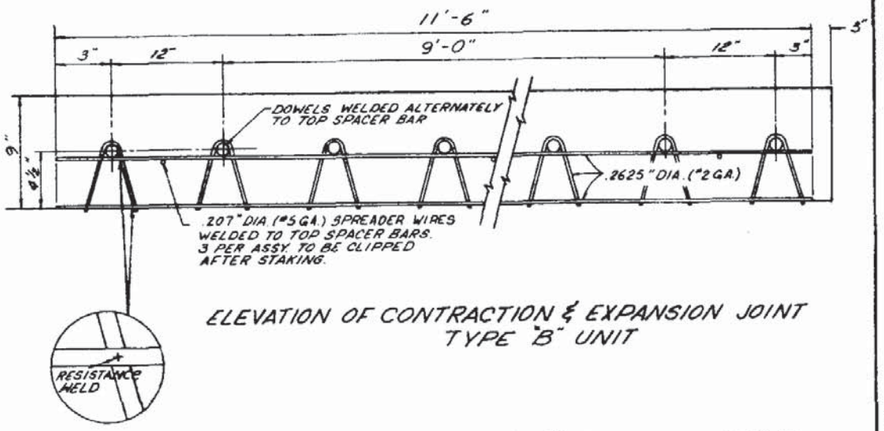

ELEVATION OF CONTRACTION & EXPANSION JOINT
TYPE "B" UNIT

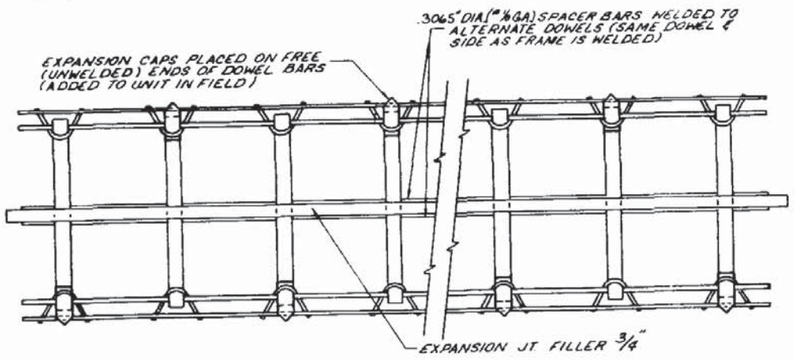

PLAN
TYPE "B" UNIT

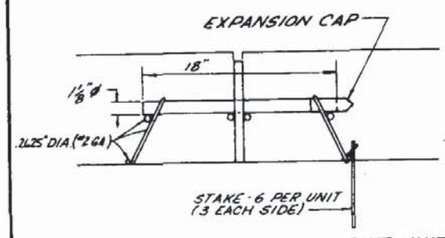

SECTION THROUGH EXPANSION JOINT UNIT

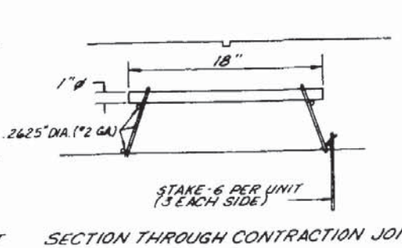

SECTION THROUGH CONTRACTION JOINT UNIT

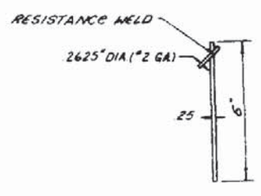

STAKE DETAIL

EXPANSION AND CONTRACTION JOINT DOWEL ASSEMBLY
ALTERNATE

IRONCO MFG. CO. INC.
HELENA, AL
(Formerly Hugensmith Materials, Inc. Pelham, AL)

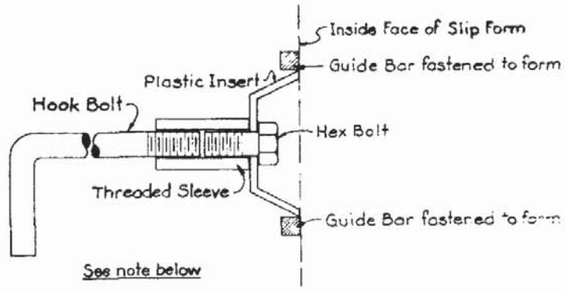

ALTERNATE KEYWAY AND TIE BAR

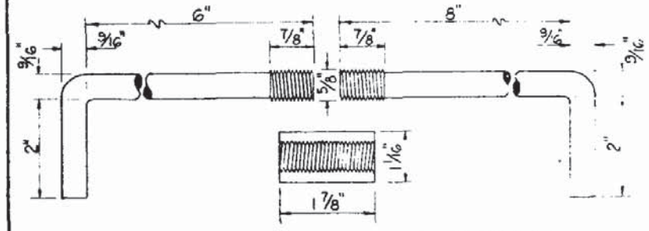

DETAIL FOR STEEL HOOK BOLT ASSEMBLY

NOTE: After the concrete has set to the extent that the Keyway will retain its shape, the hex bolt and plastic insert shall be removed. The remaining portion of the hook bolt assembly shall be installed immediately prior to placing of concrete in the adjacent lane.

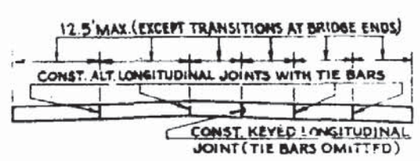

TYPICAL SECTION FOR
MULTI-LANE CONSTRUCTION

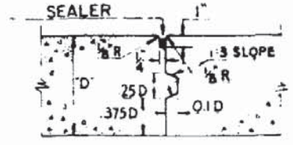

DETAIL OF KEYED JOINT

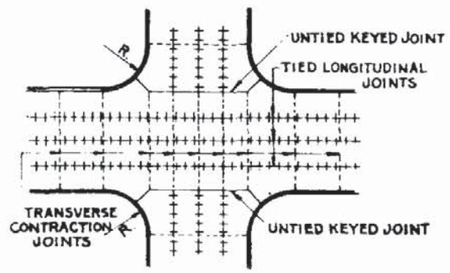

JOINT LAYOUT AT THRU
INTERSECTION

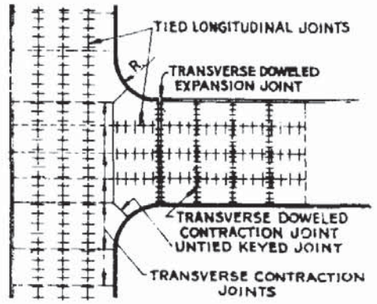

JOINT LAYOUT AT "T" OR
OFFSET INTERSECTION

GENERAL NOTES

1 LONGITUDINAL JOINTS WILL NOT BE REQUIRED FOR SINGLE LANE PAVEMENT 16 OR LESS IN WIDTH
2. When pavement width necessitates five or more longitudinal joints which would normally be tied, provide one or more united but keyed joints. No joint shall be tied that is more than 24' from a free edge or free joint including tied rigid shoulders.
3 ARRANGEMENT OF LONGITUDINAL JOINTS NOT SHOWN ON TYPICAL SEC TO BE AS DIRECTED BY THE ENGINEER
4 ALL MANHOLES, METER BOXES AND OTHER PROJECTIONS INTO THE PAVEMENT SHALL BE BOXED-IN WITH ½" PREFORMED EXPANSION JOINT MATERIAL.

DETAIL OF JOINT ARRANGEMENT

STATE OF FLORIDA DEPARTMENT OF TRANSPORTATION
ROAD DESIGN

CONCRETE PAVEMENT JOINTS

	Name	Date
Designed by		
Drawn by	L.M.F.	6/75
Checked by	S.F.A.	6/75
F.H.W.A. Approved: 10/7/80		

Approved By
Deputy Design Engineer, Roadways

Revision No.	Sheet No.	Index No.
86	4 of 4	305

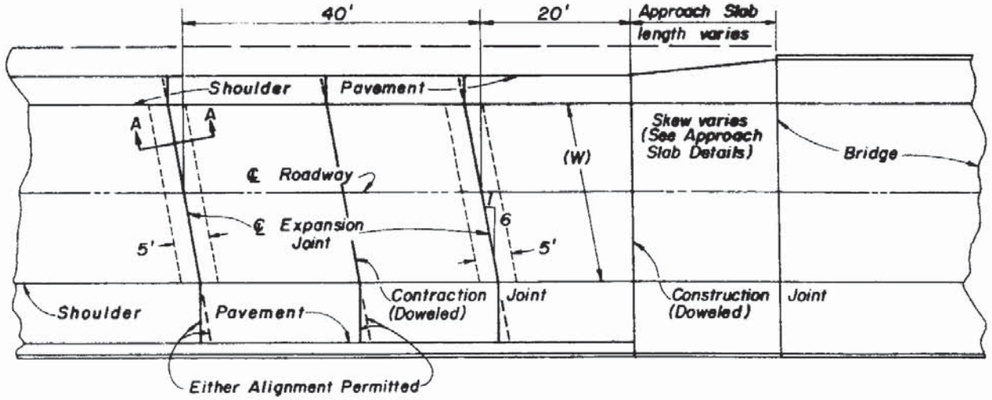

PLAN

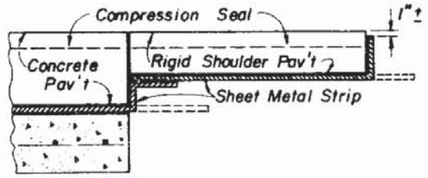

DETAIL SHOWING RIGID SHOULDER PAVEMENT

NOTE: Rigid shoulder pavement shall be concrete or econocrete as called for in the plans.

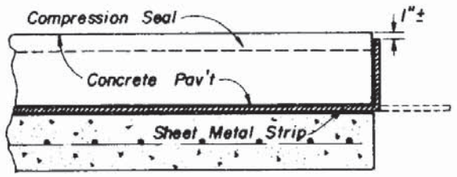

DETAIL SHOWING SHEET METAL STRIP

NOTE: Immediately prior to placing the seal, the joint shall be thoroughly cleaned of all foreign material. Immediately after the seal is placed, sheet metal strip shall be bent up against the pavement edge.

The sheet metal strip shall be a minimum 16 gage steel, 12" wide and shall be galvanized in in accordance with ASTM A-526, Coating Designation G90.

GENERAL NOTES

1. Pay quantity of expansion joint to be calculated across pavement at right angles to the centerline of the roadway pavement. Shoulder pavement joints included.
2. For additional details see Index No. 305.
3. The ℄ of roadway and the ℄ of bridge do not necessarily coincide. Prior to the placement of the expansion joint, the ℄ of the roadway pavement shall be determined.

Concrete pavement not deducted from roadway or shoulder pavement quantities. Compression seal, sheet metal strip and reinforced subslab to be paid for under the contract unit price for Bridge Approach Expansion Joint, L.F.

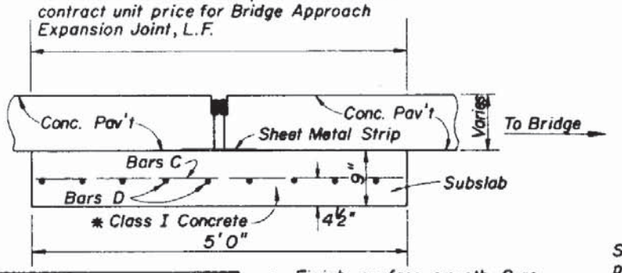

REINFORCING STEEL				
Mark	Size	Spac.	No. Req.	Lgth.
C	5	6"	Varies	4'6"
D	5	6"	9	W-4"

* Finish surface smooth. Cure with heavy coating of wax base white pigmented curing compound. Apply second application immediately prior to placing pavement.

SECTION A A THROUGH EXPANSION JOINT

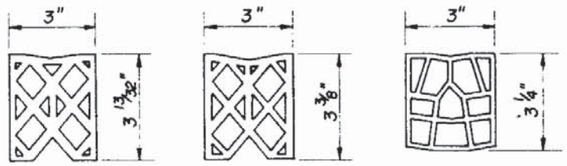

SECTION THRU SEALS

Either of the three Seals shown may be used.

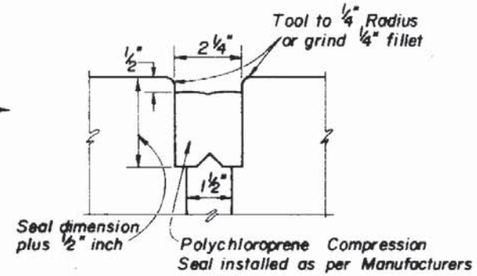

Polychloroprene Compression Seal installed as per Manufacturers Specifications.

COMPRESSION SEAL DETAIL

NOTE: All contacting surfaces between the compression seal and Concrete shall be thoroughly coated with a lubricating adhesive.

STATE OF FLORIDA DEPARTMENT OF TRANSPORTATION
ROAD DESIGN

BRIDGE APPROACH EXPANSION JOINT CONCRETE PAVEMENT

	Names	Dates
Designed by		
Drawn by	LMF	6/75
Checked by	SFA	6/75
F.H.W.A. Approved		8/16/77

Approved By
Deputy Design Engineer, Roadways

Revision No.	Sheet No.	Index No.
82	1 of 1	306

GENERAL NOTES

1. The illustrated applications for guardrail are standard requirements. Length of advancement shall be established by Figure I for all installations incorporating the Standard Flare Detail P; however length of advancement shall not be less than 62.5 feet or other approach lengths shown by detail on this index.
2. One panel equals 12.5 feet. Post spacings shall be 6'-3" except that a reduced spacing of 3'-1½" shall be used for transitions to anchorages at rigid structures such as bridges (See Detail J).
3. At hazards where the face of guardrail is offset from the hazard less than the desirable 4 foot minimum, a 2 foot minimum offset may be used with reduced post spacing extending over the length of the hazard plus one panel of approach rail. For an offset less than 2 feet, a special detail should be submitted to the State Design Engineer, Roadways for approval.
4. In addition to use at conventional roadside hazards, guardrail will be required where fill slopes exceed 3:1, except that where fill heights are less than 6 feet guardrail may be omitted (regardless of fill slope) unless in the opinion of the Engineer its use is deemed necessary due to other roadside features.
5. Straight rail sections may be used for all radii of 125 feet or greater. For radii less than 125 feet the rail must be fabricated to fit.
6. Corrugated sheet steel beams, end shoes, end sections and back-up plates shall conform to the current requirements of AASHTO M180, Class A (12 ga.), Type 2 (zinc) coating. Aluminum guardrail elements will not be permitted unless specifically called for in the plans.
7. Permissible post and offset block combinations are tabulated on sheet 10 of 13.
8. Where necessary to enlarge or add holes to galvanized guardrail, the work will be done by drilling or reaming. Damaged galvanized guardrail will be metalized in accordance with Sections 562 and 971 of the Standard Specifications. No burning of holes will be permitted.
9. Guardrail reflectors shall be the same colors as the pavement striping edge lines.
10. Crash cushions may be required in lieu of or in conjunction with guardrail at locations where space does not permit development of sufficient guardrail length, offset or crashworthiness at terminals. On high speed facilities (50 mph or greater) crash cushions shall be constructed at Type II end anchorages located in the median within the clear zone.
11. Median guardrail for bridges located on divided roadways shall be constructed the same as outer roadway guardrail under the following conditions :
    (a) Medians of uniform width that are occupied by other transportation and joint use facilities.
    (b) Medians of uniform or variable widths with independent vertical alignments not suited to normal median guardrail installations.
    (c) Medians of bifurcated roadways.
12. Any guardrail with existing concrete posts that is being reset under a construction contract shall be reset using wood or steel posts.

Design Speed (mph)	R (Runout Length) Ft				
	Over 6000 V.P.D.	2000-6000 V.P.D.	800-2000 V.P.D.	250-800 V.P.D.	Under 250 V.P.D.
60-70	480	440	400	360	330
50-55	400	360	330	300	270
40-45	320	290	260	240	210
Less Than 40	240	220	200	180	160

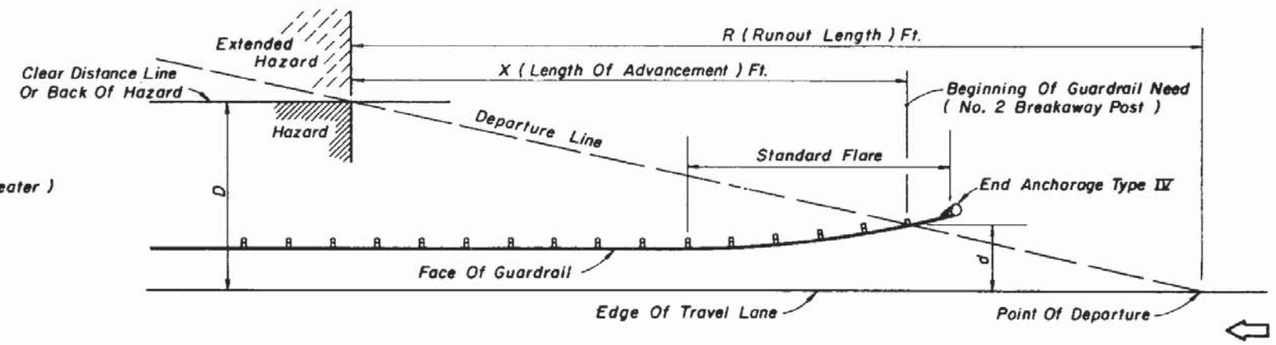

Note : Guardrail length of need is length of advancement plus length of guardrail needed for hazard or hazardous area as shown on other details of this index.

$$X = R\left(\frac{D-d}{D}\right)$$

Where:

D = Distance in feet from near edge of the near approach travel lane to back of hazard or clear zone width whichever is lesser. For left side hazards and clear zones on two-way undivided facilities D is measured from the inside edge of the near approach travel lane.

d = Distance in feet from the near edge of the near approach travel lane to the face of guardrail at the No. 2 breakaway post. For left side hazards and clear zones on two-way undivided facilities d is measured from the inside edge of the near approach travel lane. See Standard Flare - Detail P for additional information.

LENGTH OF ADVANCEMENT
Figure I

STATE OF FLORIDA DEPARTMENT OF TRANSPORTATION
ROAD DESIGN

GUARDRAIL

	Names	Dates
Designed by		
Drawn by	HSD	8/83
Checked by	JVG	8/83
F.H.W.A. Approved : 10/6/83		

Approved By
State Design Engineer, Roadways

Revision No.	Sheet No.	Index No.
86	1 of 13	400

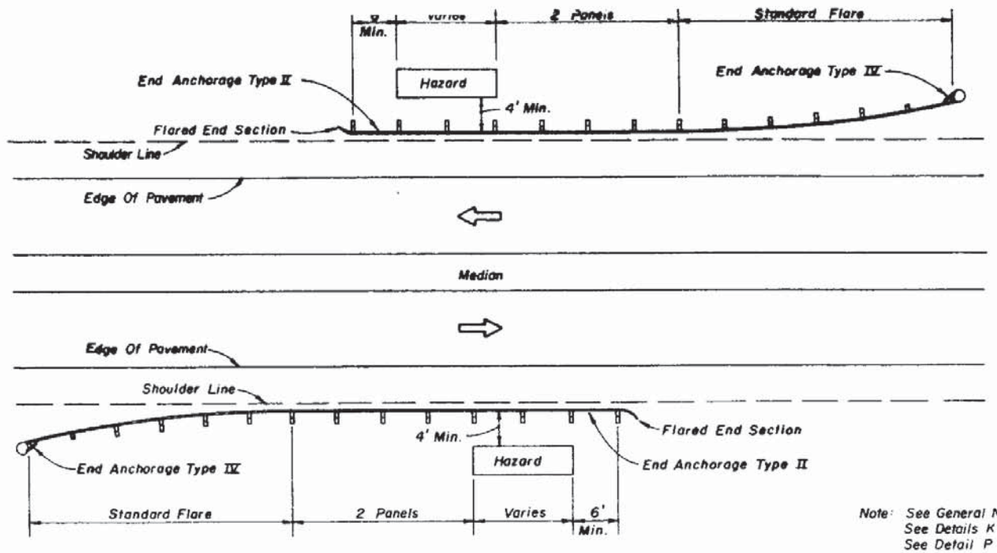

DIVIDED ROADWAY - DETAIL B

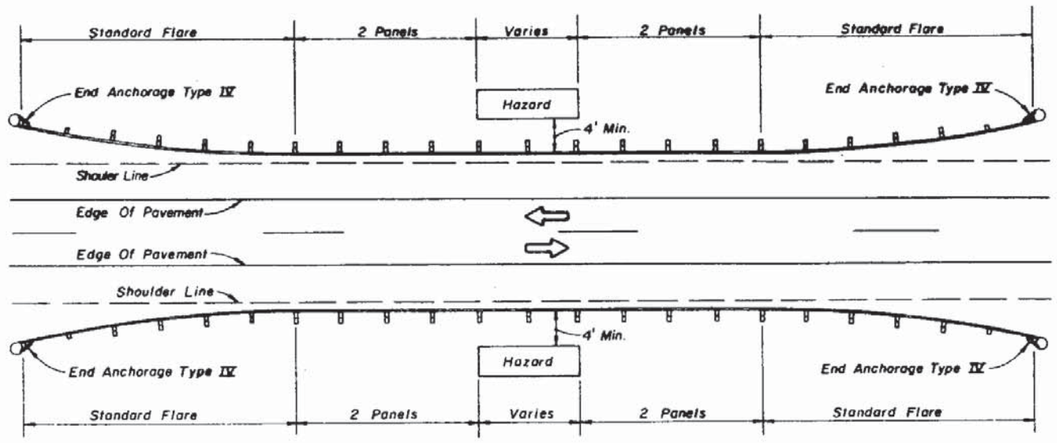

UNDIVIDED ROADWAY - DETAIL C

Note: See General Notes Nos. 1, 2, 3, and 4.
See Details K and L for guardrail offsets.
See Detail P for standard flare.
For urban curb and gutter sections that require shielding from hazards see concrete barrier wall Index No. 410.

GUARDRAIL APPLICATION FOR ROADSIDE HAZARDS

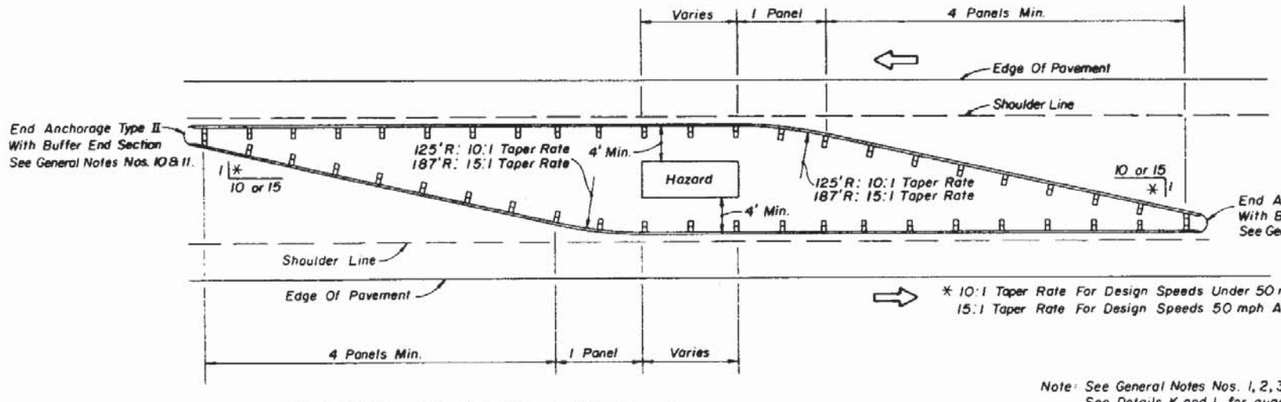

* 10:1 Taper Rate For Design Speeds Under 50 mph
15:1 Taper Rate For Design Speeds 50 mph And Greater

OPPOSING TRAFFIC - DETAIL D

Note: See General Notes Nos. 1, 2, 3 and 11.
See Details K and L for guardrail offsets.
For urban curb and gutter sections that require shielding from hazards see concrete barrier wall Index No. 410.

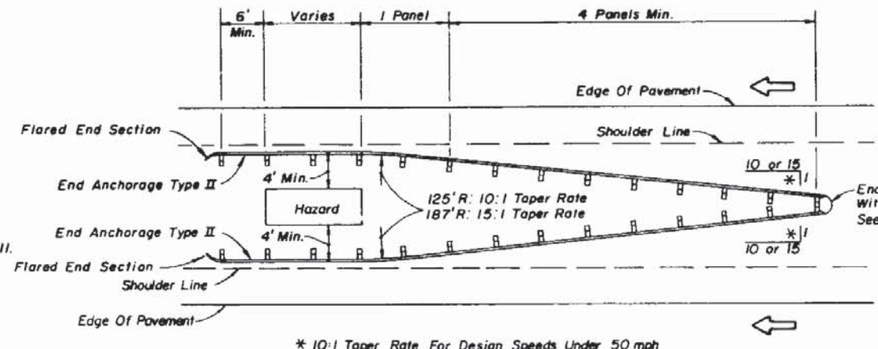

* 10:1 Taper Rate For Design Speeds Under 50 mph
15:1 Taper Rate For Design Speeds 50 mph And Greater

ONE-WAY TRAFFIC - DETAIL G

GUARDRAIL APPLICATION FOR MEDIAN AND GORE HAZARDS

STATE OF FLORIDA DEPARTMENT OF TRANSPORTATION
ROAD DESIGN

GUARDRAIL

	Names	Dates
Designed by		
Drawn by	HSD	9/81
Checked by	JBW / JVG	9/81
F.H.W.A. Approved: 10/8/81		

Approved By
Deputy Design Engineer, Roadways

Revision No.	Sheet No.	Index No.
86	2 of 13	400

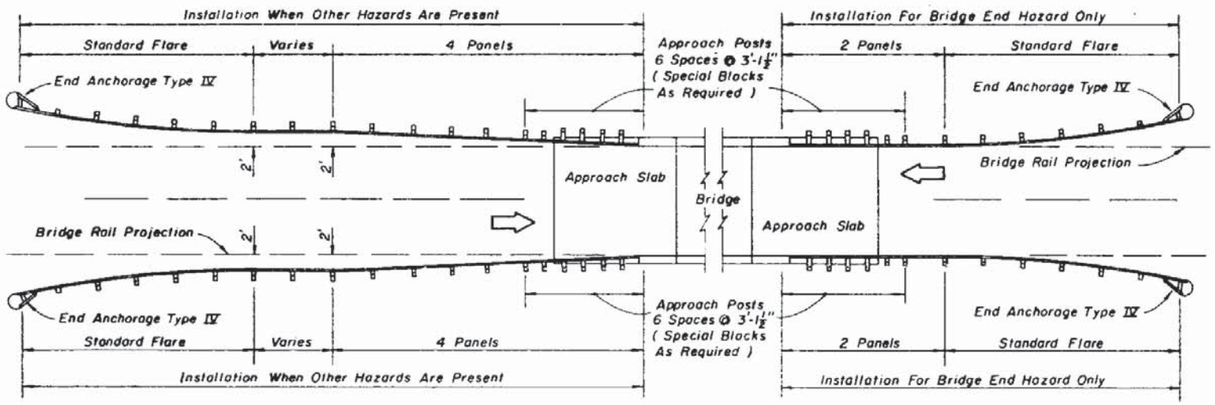

UNDIVIDED ROADWAY - DETAIL H

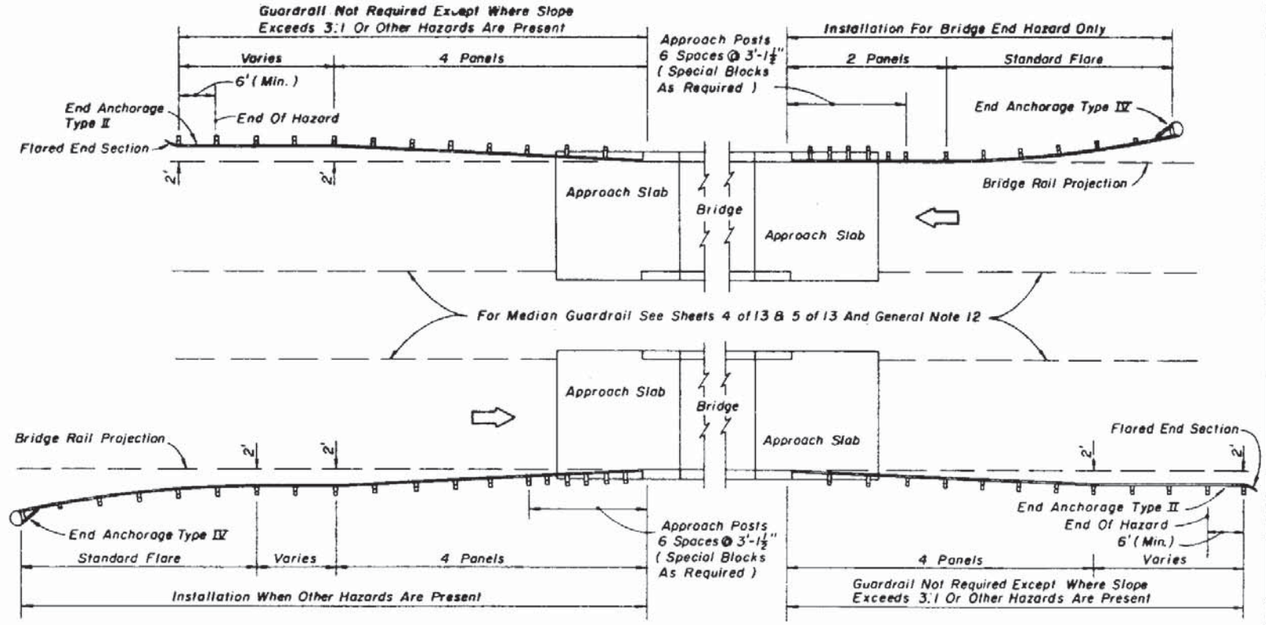

DIVIDED ROADWAY - DETAIL I

Note: See General Notes Nos. 1 and 2. See Details J and N For Connections To Bridges

GUARDRAIL APPLICATIONS FOR BRIDGES WITH FULL WIDTH SHOULDERS

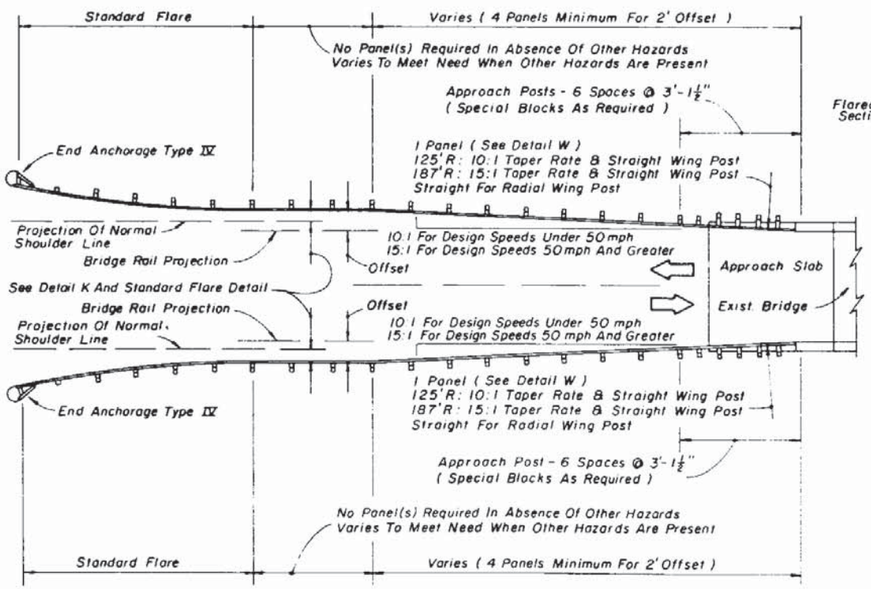

UNDIVIDED ROADWAY - DETAIL S

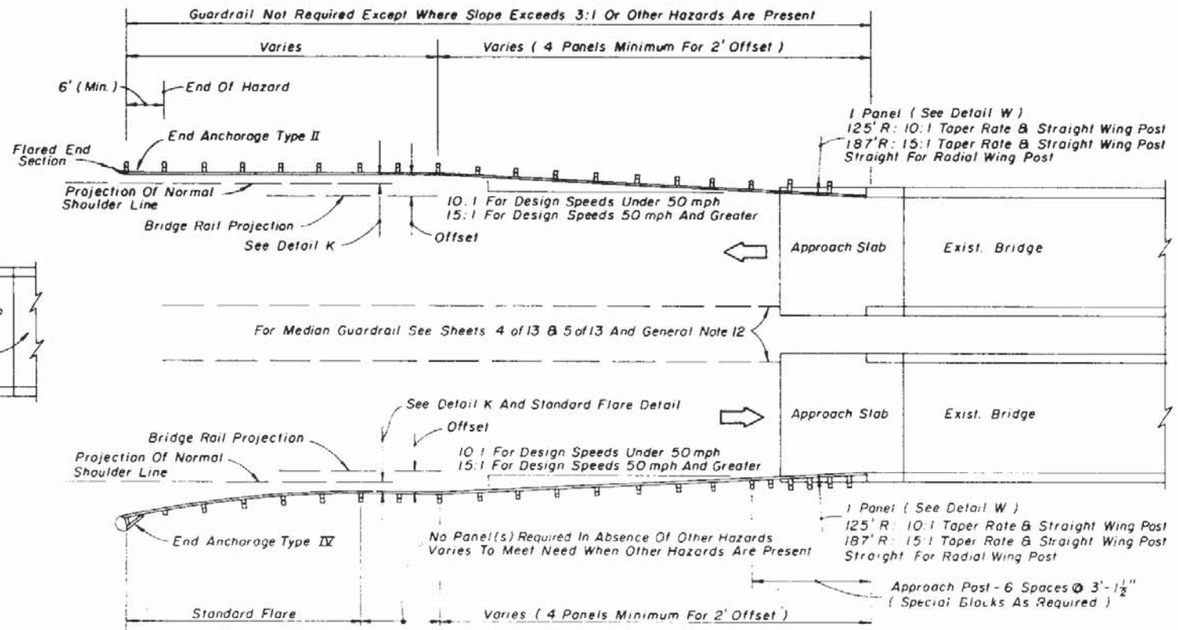

DIVIDED ROADWAY - DETAIL T

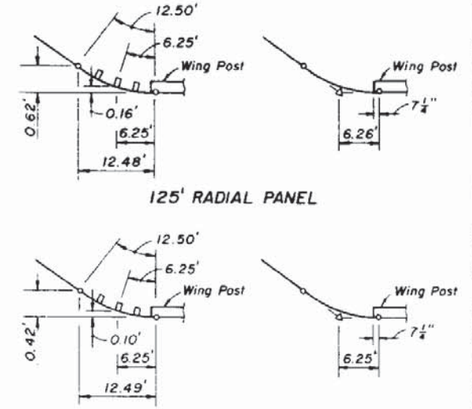

RADIAL PANELS ADJOINING BRIDGE

DETAIL W

Note: See General Note No. 2. See Details J and N For Connections To Bridges.

GUARDRAIL APPLICATIONS FOR EXISTING BRIDGES WITH LESS THAN FULL WIDTH SHOULDERS

STATE OF FLORIDA DEPARTMENT OF TRANSPORTATION
ROAD DESIGN

GUARDRAIL

	Names	Dates
Designed by		
Drawn by	HSD	8/83
Checked by	JBW/JVG	8/83
F.H.W.A. Approved : 10/6/83		

Approved By _____
State Design Engineer, Roadways

Revision No.	Sheet No.	Index No.
84	3 of 13	400

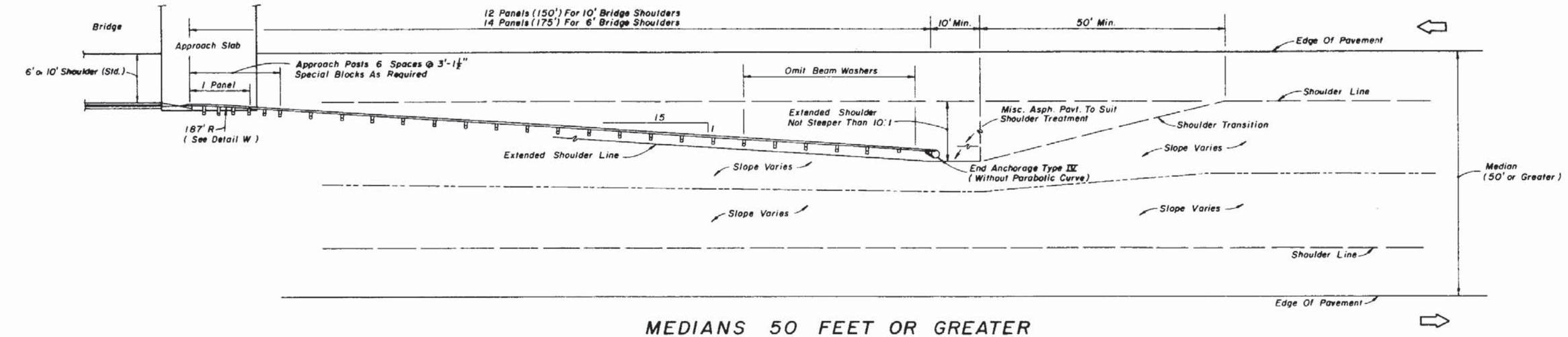

MEDIANS 50 FEET OR GREATER

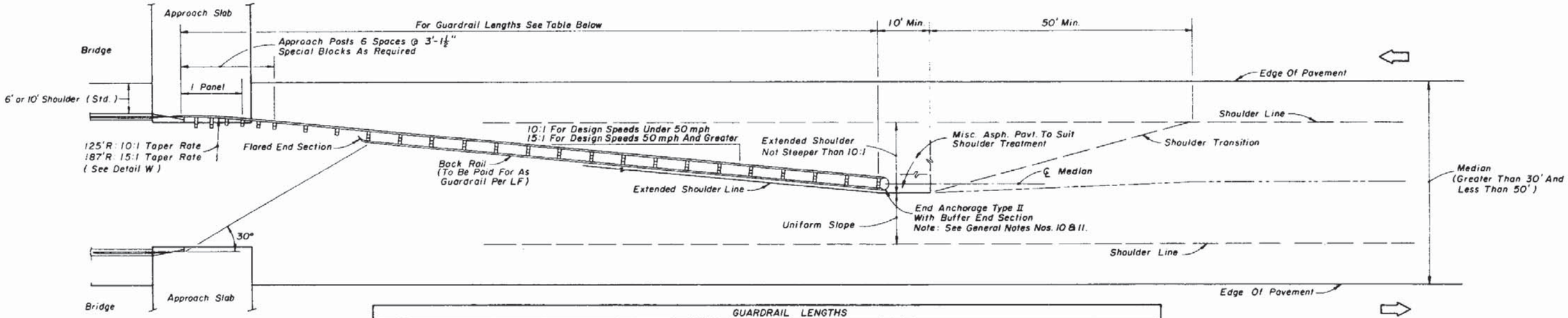

GUARDRAIL LENGTHS

Median Width (Ft.)	10:1 TAPER RATE												15:1 TAPER RATE											
	6' Bridge Shoulder						10' Bridge Shoulder						6' Bridge Shoulder						10' Bridge Shoulder					
	Panels (No.)			Length (Ft.)			Panels (No.)			Length (Ft.)			Panels (No.)			Length (Ft.)			Panels (No.)			Length (Ft.)		
	Front	Back	Total	Front	Back	Total	Front	Back	Total	Front	Back	Total	Front	Back	Total	Front	Back	Total	Front	Back	Total	Front	Back	Total
32	8	6	14	100	75	175	5	4	9	62.5	50	112.5	11	9	20	137.5	112.5	250	6	5	11	75	62.5	137.5
34	8	6	14	100	75	175	5	4	9	62.5	50	112.5	12	10	22	150	125	275	7	6	13	87.5	75	162.5
36	9	7	16	112.5	87.5	200	6	5	11	75	62.5	137.5	13	11	24	162.5	137.5	300	8	7	15	100	87.5	187.5
38	10	8	18	125	100	225	7	6	13	87.5	75	162.5	14	11	25	175	137.5	312.5	10	8	18	125	100	225
40	11	8	19	137.5	100	237.5	8	6	14	100	75	175	16	13	29	200	162.5	362.5	11	9	20	137.5	112.5	250
42	12	9	21	150	112.5	262.5	8	7	15	100	87.5	187.5	17	14	31	212.5	175	387.5	12	10	22	150	125	275
44	12	9	21	150	112.5	262.5	9	7	16	112.5	87.5	200	18	15	33	225	187.5	412.5	13	11	24	162.5	137.5	300
46	13	10	23	162.5	125	287.5	10	8	18	125	100	225	19	15	34	237.5	187.5	425	14	12	26	175	150	325
48	14	10	24	175	125	300	11	8	19	137.5	100	237.5	20	16	36	250	200	450	16	12	28	200	150	350

MEDIANS GREATER THAN 30' AND LESS THAN 50'

STATE OF FLORIDA DEPARTMENT OF TRANSPORTATION
ROAD DESIGN

GUARDRAIL

	Names	Dates
Designed by		
Drawn by	HSD	9/81
Checked by	JBW/JVG	9/81
F.H.W.A. Approved		10/8/81

Approved By
Deputy Design Engineer, Roadways

Revision No.	Sheet No.	Index No.
86	4 of 13	400

10:1 Taper Rate	Median	Panels	Length
	30'	6	75'
	28'	5	62.5'
	26'	Attenuator	
	24'	Attenuator	

15:1 Taper Rate	Median	Panels	Length
	30'	9	112.5'
	28'	6	75'
	26'	Attenuator	
	24'	Attenuator	

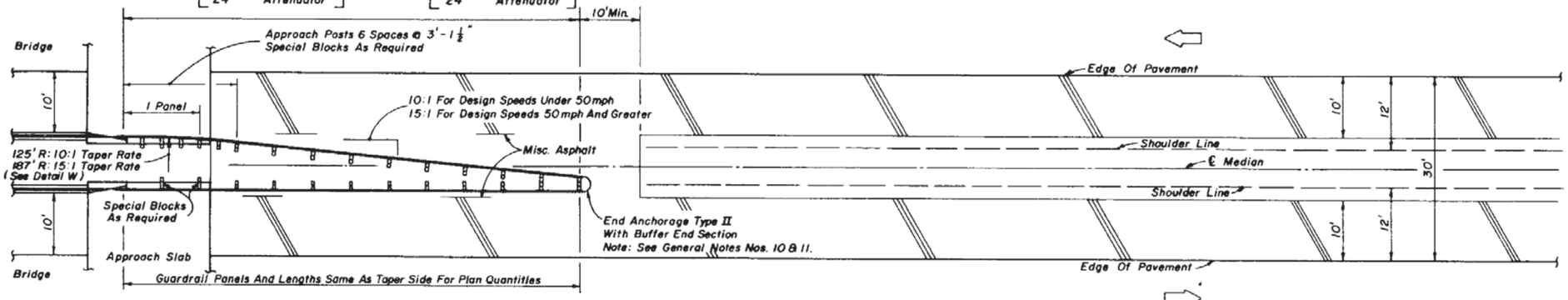

MEDIANS 30' OR LESS WITH 10' BRIDGE SHOULDERS

10:1 Taper Rate	Median	Panels	Length
	30'	12	150'
	28'	11	137.5'
	26'	9	112.5'
	24'	8	100'

15:1 Taper Rate	Median	Panels	Length
	30'	18	225'
	28'	15	187.5'
	26'	13	162.5'
	24'	11	137.5'

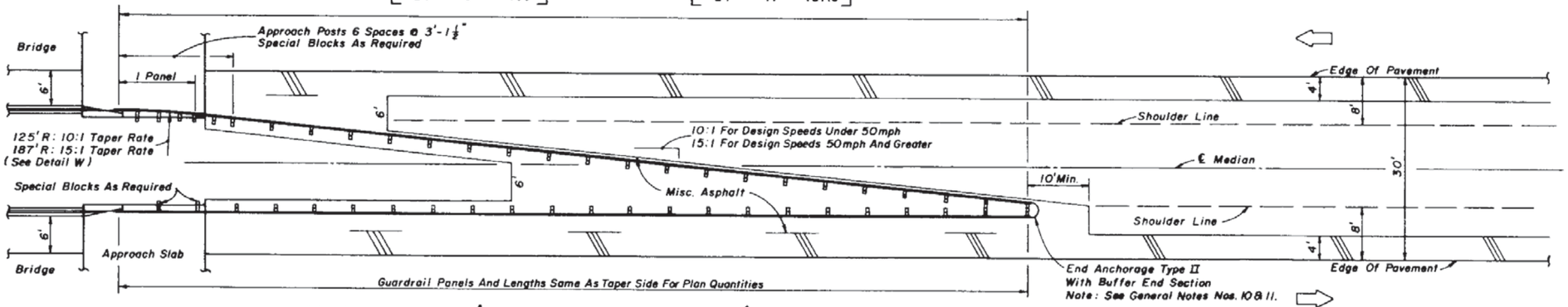

MEDIANS 30' OR LESS WITH 6' BRIDGE SHOULDERS

STATE OF FLORIDA DEPARTMENT OF TRANSPORTATION
ROAD DESIGN

GUARDRAIL

	Names	Dates
Designed by		
Drawn by	RWR	8/82
Checked by	JVG/JBW	8/82
F.H.W.A. Approved: 9/23/82		

Approved By
State Design Engineer, Roadways

Revision No.	Sheet No.	Index No.
86	5 of 13	400

LEGEND

1. Edge of roadway pavement.
2. Taper
3. Pavement return (radius R_1).
4. Standard flare to be installed except when existing guardrail on intersecting drive or side road adjoins the project.
5. Post for locating standard flare, proximate to PC or PT:
   - No. 2 post - Radii 25' or less.
   - No. 3 post - Radii 25' thru 50'.
   - No. 4 post - Radii 50' or greater.
6. Extended roadway shoulder for standard flare.
7. Shoulder transition.
8. Type IV end anchorage.
9. Roadway shoulder for radial guardrail returns.
10. Radial guardrail to be installed when guardrail required on the intersecting drive or side road (radius R_2).
11. Type II end anchorage (radial return only).
12. Guardrail installation limited to roadway right of way unless otherwise called for in the plans.

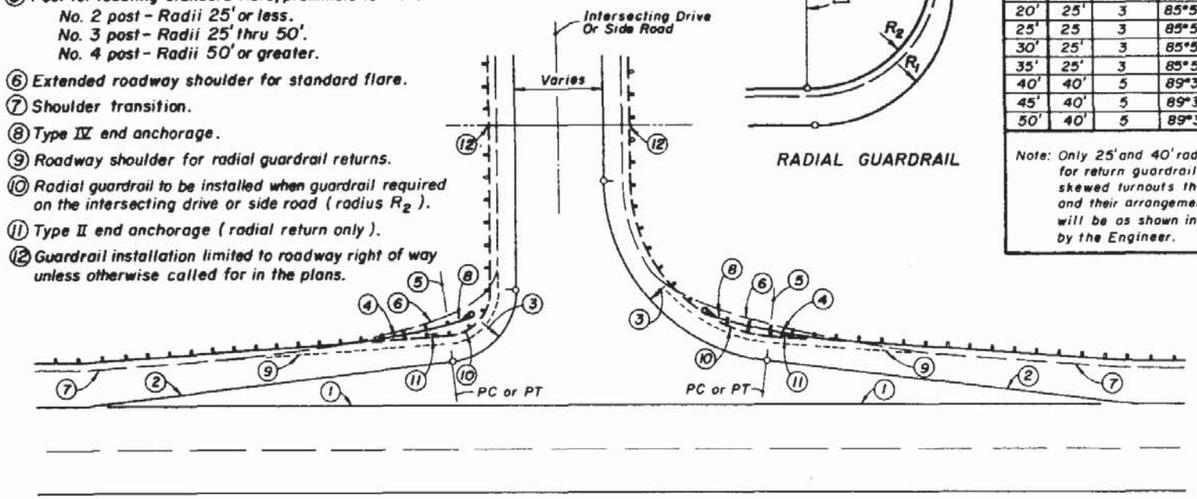

TAPER TURNOUTS

RADIAL GUARDRAIL

RADIAL GUARDRAIL

Normal Turnouts						
	Simple Curve			Taper		
R_1	R_2	Panels Required	Δ	R_2	Panels Required	Δ
15'	25'	3	85°56'	25'	3	85°56'
20'	25'	3	85°56'	25'	3	85°56'
25'	25	3	85°56'	25'	3	85°56'
30'	25'	3	85°56'	25'	3	85°56'
35'	25'	3	85°56'	25'	3	85°56'
40'	40'	5	89°31'	40'	5	89°31'
45'	40'	5	89°31'	40'	5	89°31'
50'	40'	5	89°31'	40'	5	89°31'

Note: Only 25' and 40' radius panels are to be used for return guardrail on normal turnouts. On skewed turnouts the number of panels used and their arrangement with straight panels will be as shown in the plans or as directed by the Engineer.

LEGEND

1. Edge of roadway pavement.
2. Pavement return (radius R_1).
3. Standard flare to be installed except when existing guardrail on intersecting drive or side road adjoins the project.
4. Post for locating standard flare, proximate to PC or PT.
   - No. 3 post - Radii 25' or less.
   - No. 4 post - Radii greater than 25'.
5. Extended roadway shoulder for standard flare.
6. Type IV end anchorage.
7. Roadway shoulder for radial guardrail returns.
8. Radial guardrail to be installed when guardrail required on the intersecting drive or side road (radius R_2).
9. Type II end anchorage (radial return only).
10. Guardrail installation limited to roadway right of way unless otherwise called for in the plans.

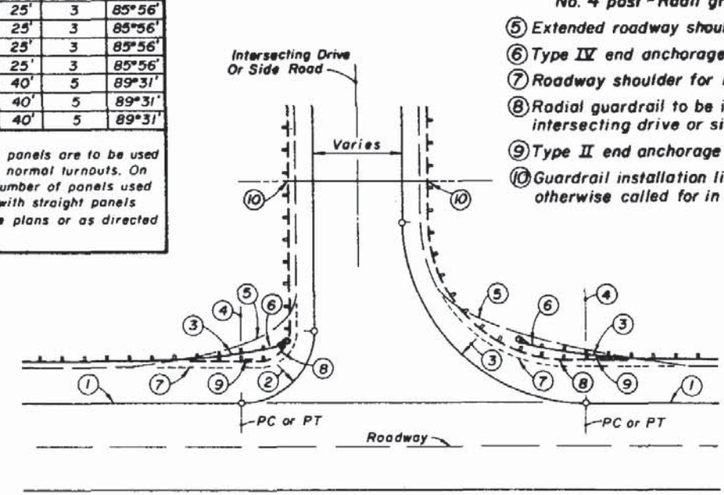

SIMPLE CURVE TURNOUTS

INTERSECTING DRIVES AND SIDE ROADS ON RURAL FACILITIES

STATE OF FLORIDA DEPARTMENT OF TRANSPORTATION
ROAD DESIGN

GUARDRAIL

	Names	Dates
Designed by		
Drawn by	HSO	9/83
Checked by	JVG	9/83
F.H.W.A. Approved: 10/6/83		

Approved By _____
State Design Engineer, Roadways

Revision No.	Sheet No.	Index No.
84	6 of 13	400

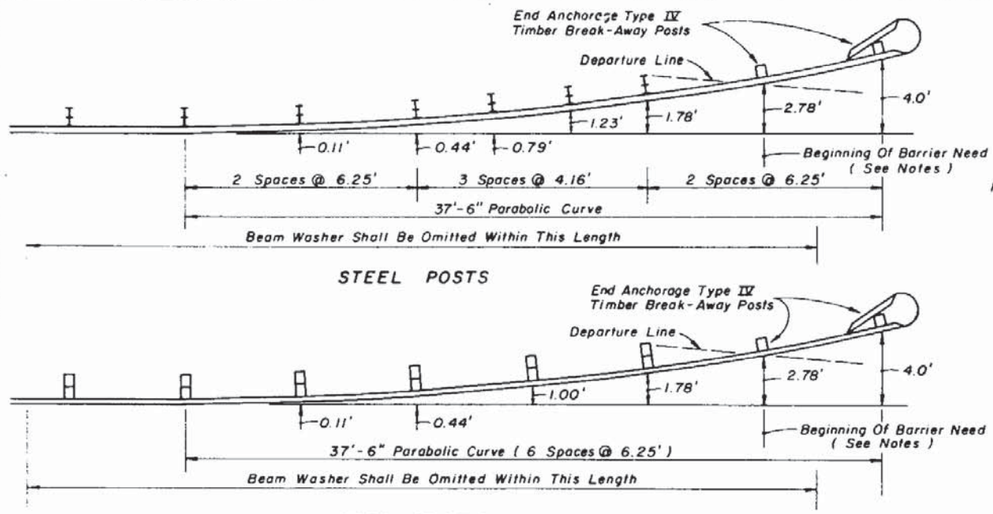

STANDARD FLARE - DETAIL P

Notes:

All posts in flare except break-away posts to be standard length posts.

All posts except break-away post will have offset blocks. For post and offset block combinations see sheet 10 of 13.

Length of advancement for guardrail need to be determined by Figure 1, Sheet 1 of 13.

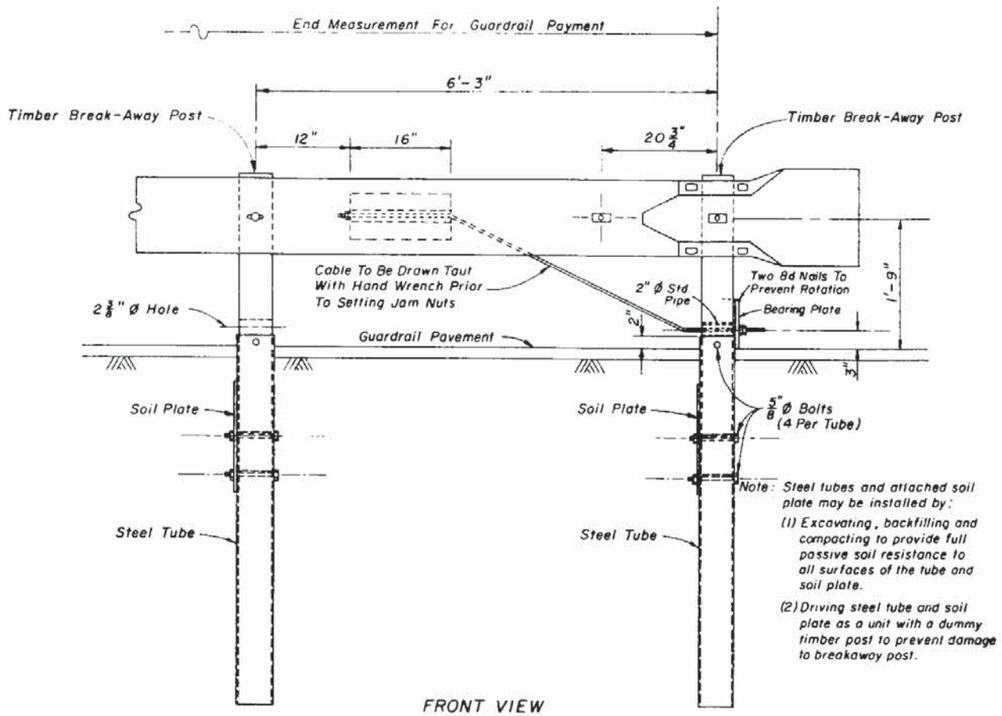

FRONT VIEW

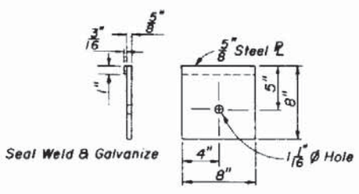

BEARING PLATE

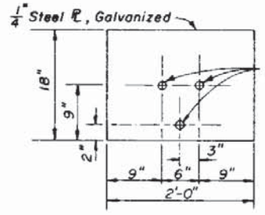

SOIL PLATE

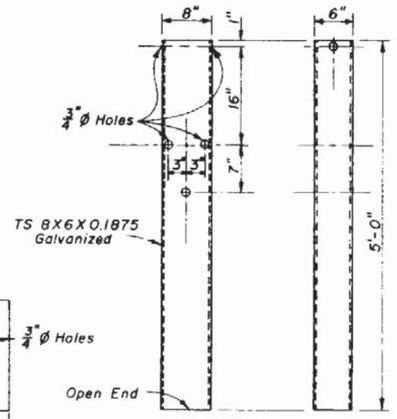

STEEL TUBE

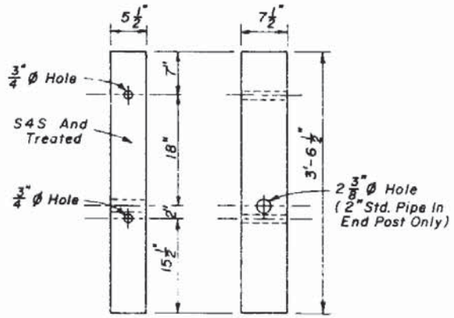

Note: Post can be either rough sawn or surfaced four sides.

TIMBER BREAK-AWAY POST

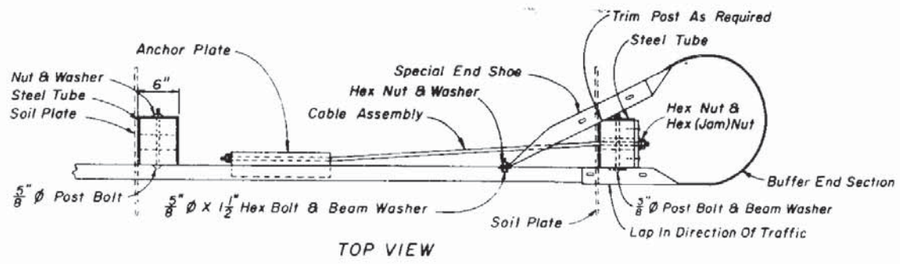

TOP VIEW

END ANCHORAGE TYPE IV

Note The payment for the items of End Anchorage Assemblies Type IV shall include furnishing and installing the Buffer End Section, Special End Shoe, One-Piece Anchor Plate, Cable Assembly, Pipe Sleeve, Soil Plates, Steel Tubes, Bearing Plate, two Treated Timber Break-Away Posts, and the necessary hardware.

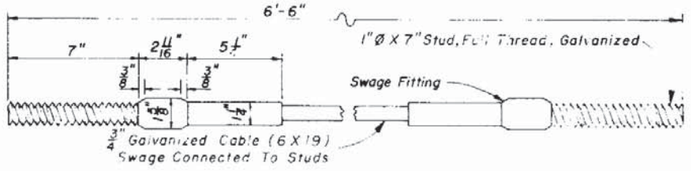

Note: BCT Cable Assembly to be in accordance with the specifications of Standard F-37-76, ARTBA Technical Bulletin No 268-B, June 1979.

CABLE ASSEMBLY

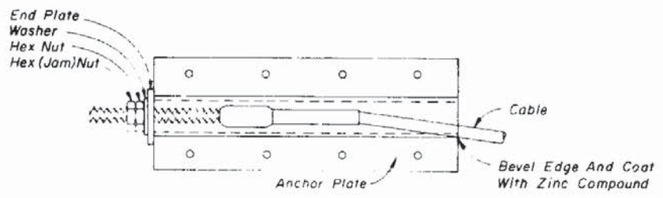

Note: For additional information see Anchor Plate detail.

CABLE CONNECTION TO BEAM

STATE OF FLORIDA DEPARTMENT OF TRANSPORTATION
ROAD DESIGN

GUARDRAIL

	Names	Dates
Designed by		
Drawn by	J M	1/81
Checked by	J V G	1/81
F.H.W.A. Approved:		10/8/81

Approved By: Deputy Design Engineer, Roadways

Revision No.	Sheet No.	Index No.
86	7 of 13	400

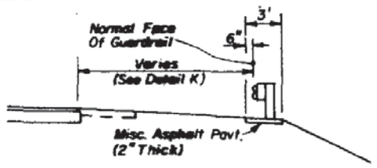

SHOULDER WITH OR WITHOUT 4' PAVEMENT

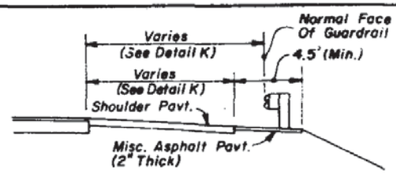

PAVED SHOULDERS

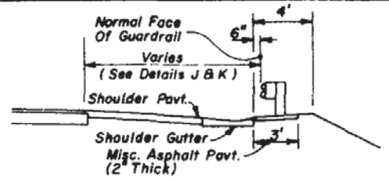

SHOULDER GUTTER

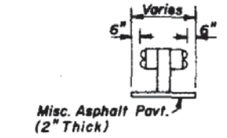

DOUBLE FACE RAIL

MISCELLANEOUS PAVEMENT FOR STANDARD SECTIONS

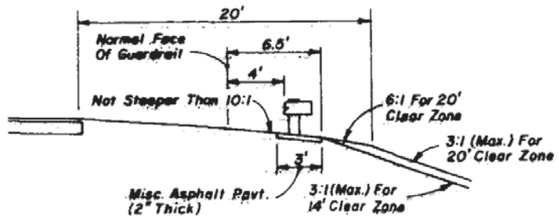

SECTION AA FOR 20' CLEAR ZONE

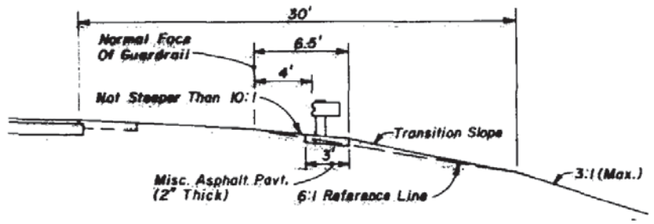

SECTION AA FOR 30' CLEAR ZONE

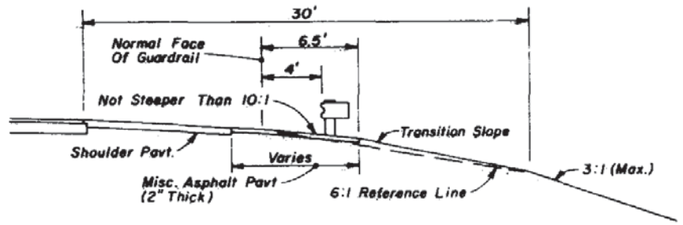

SECTION BB

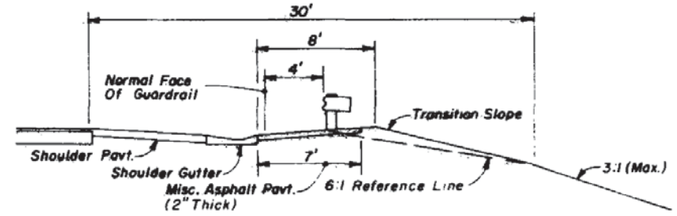

SECTION CC

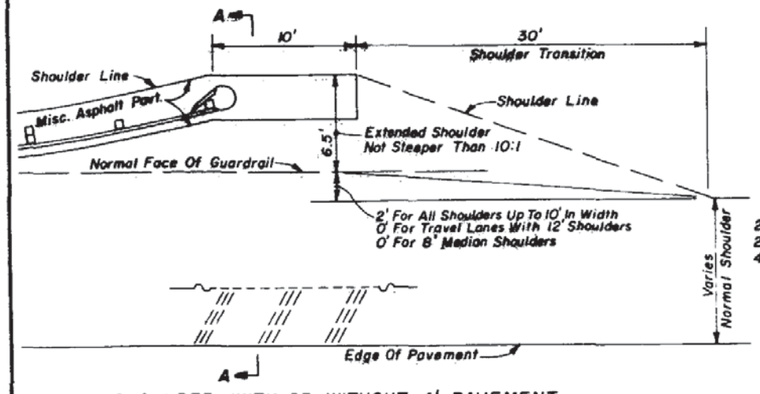

SHOULDER WITH OR WITHOUT 4' PAVEMENT

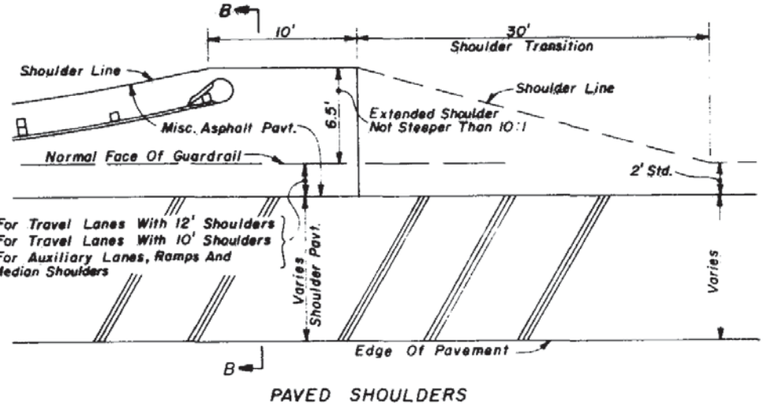

PAVED SHOULDERS

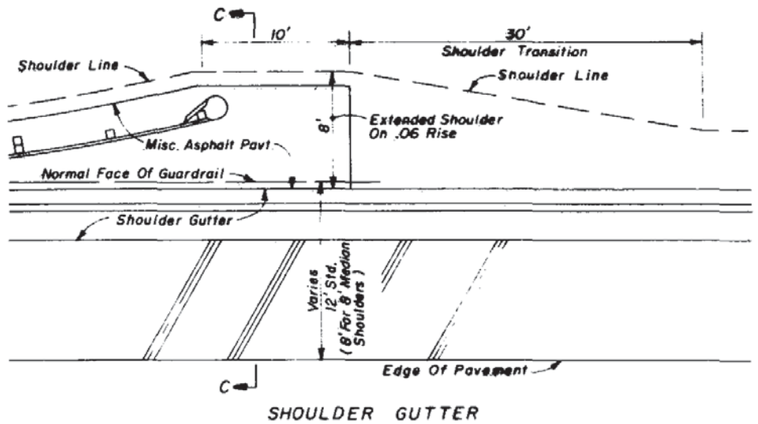

SHOULDER GUTTER

SHOULDERS, SLOPES AND MISCELLANEOUS PAVING FOR THE STANDARD FLARE

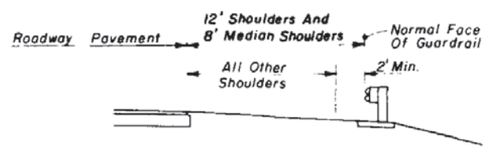

STANDARD GUARDRAIL LOCATION - DETAIL K

STATE OF FLORIDA DEPARTMENT OF TRANSPORTATION
ROAD DESIGN

GUARDRAIL

	Names	Dates
Designed By		
Drawn By	JM	7/81
Checked By	JBW/JVG	7/81
F.H.W.A.	Approved	10/8/81

Approved By
Deputy Design Engineer, Roadways

Revision No.	Sheet No.	Index No.
85	8 of 13	400

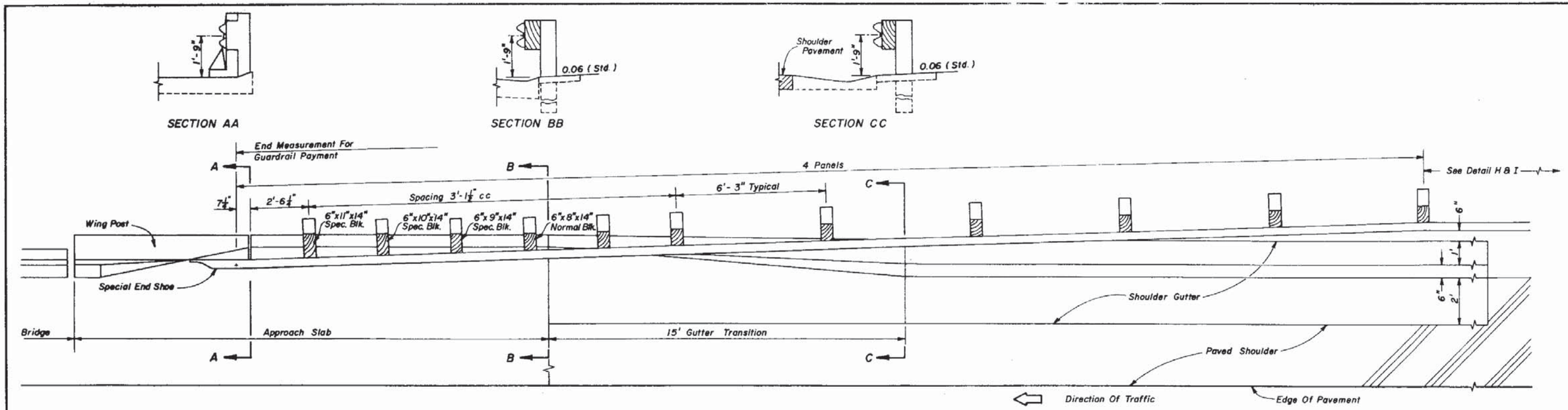

GUARDRAIL AND SHOULDER GUTTER TRANSITIONS AT BRIDGE APPROACHES - DETAIL J

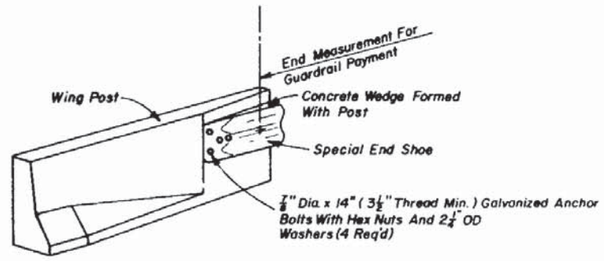

All Component Parts Shall Be Included In The Contract Unit Price For Guardrail.

GUARDRAIL ATTACHMENT AT HANDRAIL BARRIER - DETAIL N

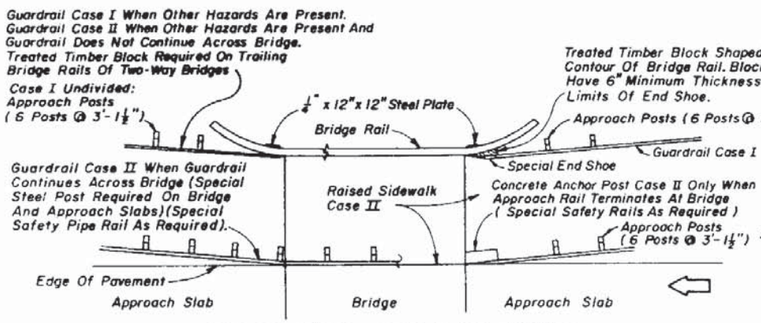

INSTALLATION - CASE I AND CASE II

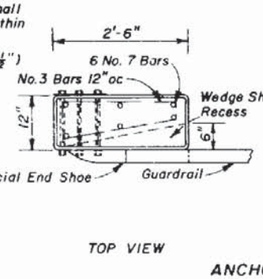

TOP VIEW

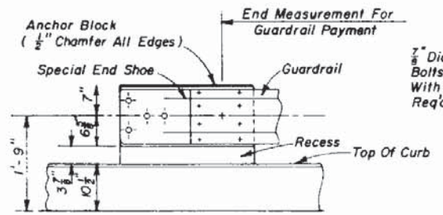

SIDE VIEW

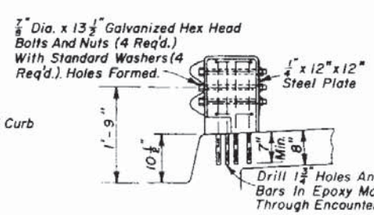

END VIEW

ANCHOR POST - CASE II (NOT APPICABLE TO UNDIVIDED ROADWAYS)

CASE I: UNDIVIDED ROADWAY WITH OR WITHOUT RAISED SIDEWALK
DIVIDED ROADWAY WITHOUT RAISED SIDEWALK
CASE II: DIVIDED ROADWAY WITH RAISED SIDEWALK

TYPICAL GUARDRAIL INSTALLATION AT EXISTING BRIDGE ENDS

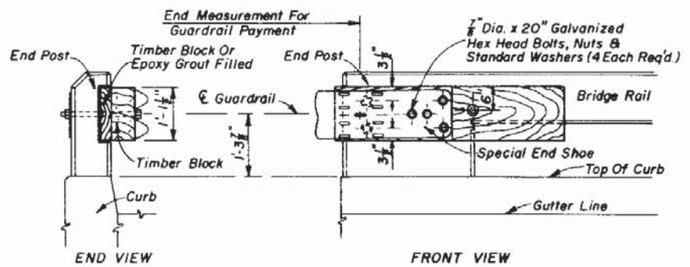

END VIEW FRONT VIEW

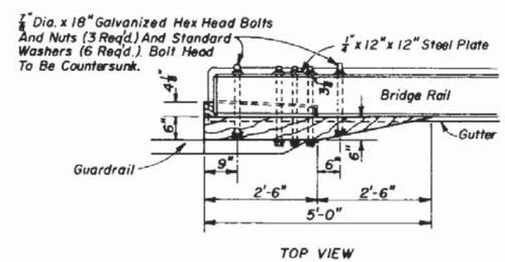

TOP VIEW

FOR APPROACH AND TRAILING ENDS OF TWO-WAY BRIDGES AND APPROACH ENDS OF ONE WAY BRIDGES. GUARDRAIL ON TRAILING ENDS OF ONE-WAY BRIDGES CAN BE MOUNDED DIRECTLY IN THE END POST RECESS.

GUARDRAIL ATTACHMENT AT END POST ON EXISTING BRIDGES

STATE OF FLORIDA DEPARTMENT OF TRANSPORTATION
ROAD DESIGN

GUARDRAIL

	Names	Dates
Designed by		
Drawn by	J M	8/81
Checked by	JVG/JBW	9/81
F.H.W.A. Approved :		10/8/81

Approved By
Deputy Design Engineer, Roadways

Revision No.	Sheet No.	Index No.
86	9 of 13	400

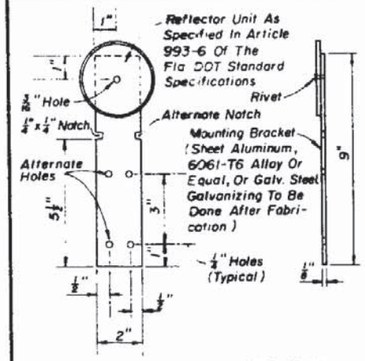

REFLECTOR ASSEMBLY

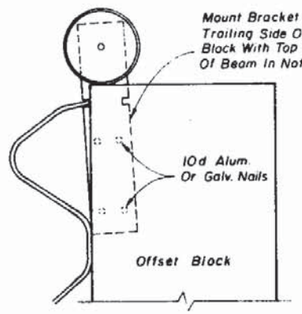

TIMBER OFFSET BLOCK MOUNTING

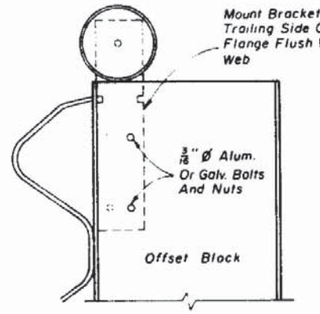

STEEL OFFSET BLOCK MOUNTING

REFLECTOR ASSEMBLY AND MOUNTING

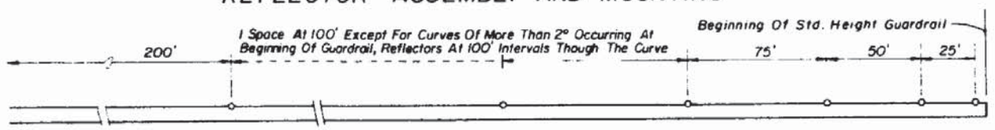

Note. Adjustment in spacing may be required to fit exact guardrail lengths as directed by the Engineer. For minimum installations (length 62.5') provide one reflector at each end and at approximate center.

REFLECTOR SPACING

REFLECTORS - DETAIL M

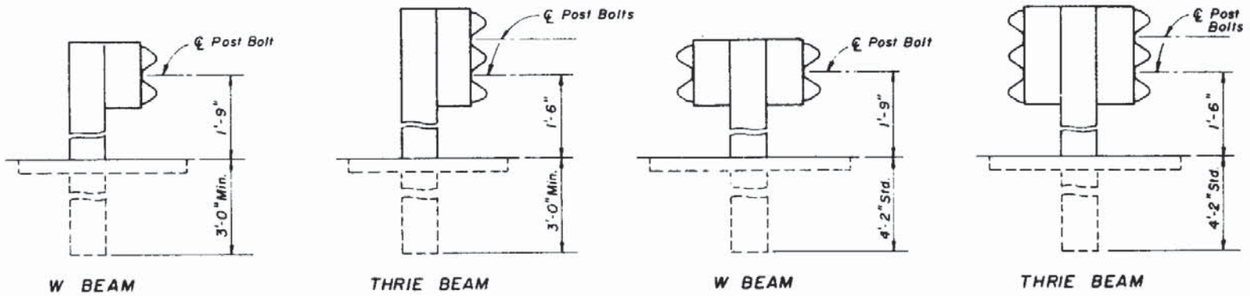

SINGLE FACED GUARDRAIL — DOUBLE FACED GUARDRAIL

MOUNTING HEIGHTS ON SHOULDERS AND IN MEDIANS

POST	OFFSET BLOCK	Remarks
Timber	6"x8" & 5"x8" (Nominal) x 14" Timber	Post bolt hole in timber block to be centered (±1/4"). See note below for timber surfaces and tolerances.
Steel W6 x 8.5 and 6"C	6"x8" & 5"x8" (Nominal) x 14" Timber W6 x 8.5 x 14" & 6"C x 14" Steel To Match Post	Same as above. 5/8" Ø x 1 1/2" galv. hex head bolts with full length thread and nuts (2 Req'd.) and washers (4 Req'd.) for mounting steel block to post. Bolts are to be installed in opposite holes.

Note: Timber posts and offset blocks may be either rough or dressed timber. Timber posts and offset blocks with the same surface must be used throughout a continuous run of guardrail, except when special posts are required in conjunction with normal timber posts. Rough timber posts and offset blocks shall have dimension tolerances of 1/4 over and 1/8 under nominal for both width and depth.

Thrie Beam blocks are 22" in length.

PERMISSIBLE POST AND OFFSET BLOCK COMBINATIONS

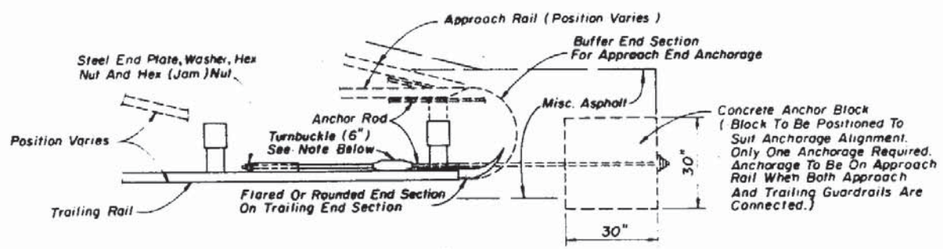

TOP VIEW

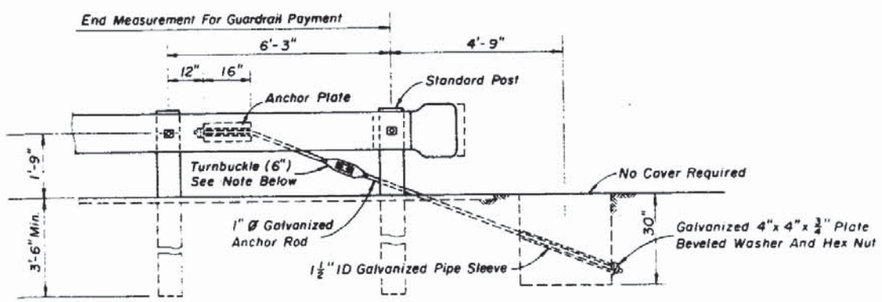

FRONT VIEW

Note:
The payment for the items of End Anchorage Assemblies Type II shall include furnishing and installing anchor plate, anchor rod, pipe sleeve, anchor block, either flared, rounded or buffer end section, and, the necessary hardware.

Turnbuckle to be used only for guardrail that is reset vertically. The existing anchor rod (1" or 1 1/4" Dia) shall be field cut, threaded 4" on each end, and, metalized in accordance with Sections 562 and 971 of the Standard Specifcations The cost for cutting, threading, metalizing and the turnbuckle shall be included in the contract unit price for Reset Guardrail, LF.

END ANCHORAGE TYPE II - DETAIL R

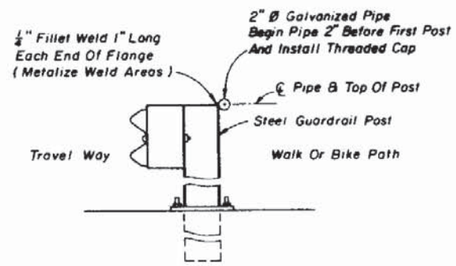

SECTION

Note: Cost of pipe to be included in the contract unit price for guardrail.

FOR LOCATIONS USED BY SUBSTANTIAL NUMBERS OF PEDESTRIANS, CYCLISTS OR FISHERMEN

SPECIAL SAFETY PIPE RAIL

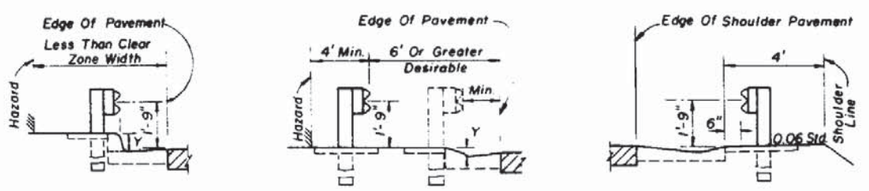

LOCATION AT CURB & GUTTER SECTIONS - DETAIL L

STATE OF FLORIDA DEPARTMENT OF TRANSPORTATION
ROAD DESIGN

GUARDRAIL

	Names	Dates
Designed by		
Drawn by	HSD	9/81
Checked by	JBW/JWG	9/81
FHWA Approved		10/8/81

Approved By
Deputy Design Engineer, Roadways

Revision No.	Sheet No.	Index No.
86	10 of 13	400

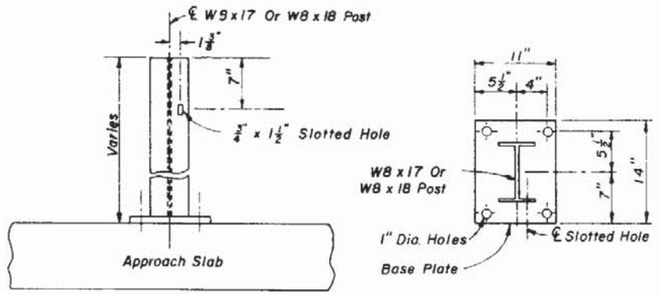

FRONT VIEW

TOP VIEW

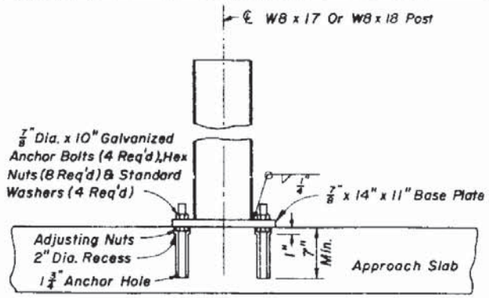

SIDE VIEW

NOTES: (STEEL POST)

1. Either anchor bolts or concrete wedge anchors may be used. Anchor bolts are to be installed as detailed. Wedge anchors are to be installed in accordance with the manufacturers recommendations, assuming 3000 psi compressive strength for concrete. Wedge anchors shall also meet the following requirements: (a) tensile strength 125,000 psi (b) tensile load (approach slabs) 14,000 lbs. each; (other structures) 8000 lbs. each (c) shear load (approach slabs) 15,000 lbs. each; (other structures) 7800 lbs. each (d) have an electroplated zinc coating, Type LS, applied in accordance with ASTM A-164. The coated bolts, nuts and washers shall be chromate treated after coating in a water solution containing 0.2 % sodium dichromate (3 oz. per 10 gals.).
2. Anchor holes and recesses are to be drilled. Encountered reinforcing steel shall be drilled through. Holes shall be thoroughly cleaned before setting bolts or wedge anchors and dry when setting bolts. Bolts shall be set in epoxy mortar.
3. Posts are to be plumbed with adjusting nuts when bolts are used and plumbed with mortar seating when wedge anchors are used. All base plates to be grouted with neat finish.
4. Steel post and plate assembly to be galvanized. Any damaged galvanized areas to be metalized in accordance with Section 562 of the Standard Specifications.

STEEL GUARDRAIL POST MOUNTING TO EXISTING APPROACH SLABS

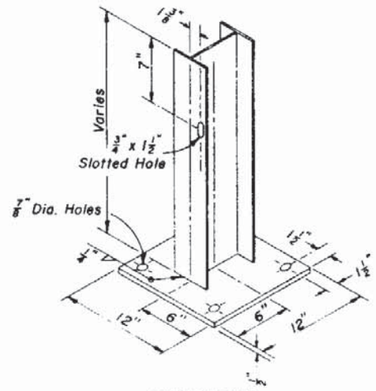

PROJECTION

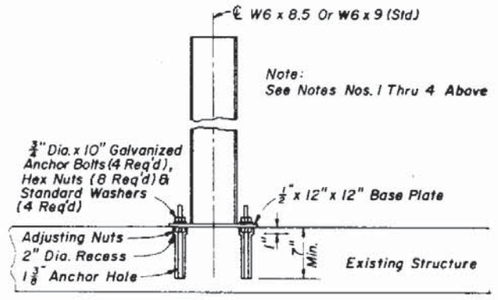

SIDE VIEW

STEEL POST

FOR CONSTRUCTION OF GUARDRAIL WHERE CULVERT, PIER FOOTING OR OTHER STRUCTURE PRECLUDES NORMAL POST INSTALLATION

SPECIAL STEEL GUARDRAIL POSTS

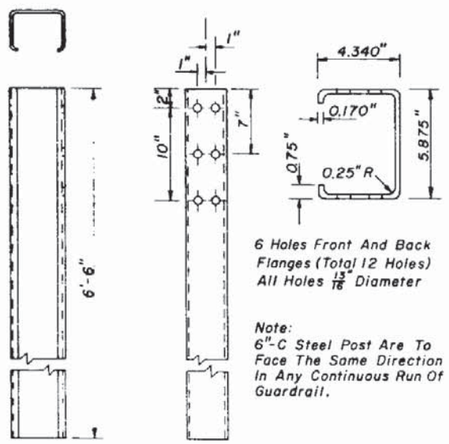

6 Holes Front And Back Flanges (Total 12 Holes) All Holes 13/16" Diameter

Note:
6"-C Steel Post Are To Face The Same Direction In Any Continuous Run Of Guardrail.

SIDE VIEW FRONT VIEW

6"-C STEEL POST

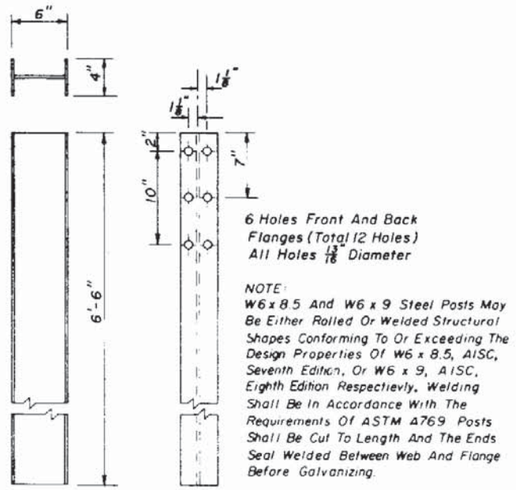

6 Holes Front And Back Flanges (Total 12 Holes) All Holes 13/16" Diameter

NOTE:
W6 x 8.5 And W6 x 9 Steel Posts May Be Either Rolled Or Welded Structural Shapes Conforming To Or Exceeding The Design Properties Of W6 x 8.5, AISC, Seventh Edition, Or W6 x 9, AISC, Eighth Edition Respectively. Welding Shall Be In Accordance With The Requirements Of ASTM A769. Posts Shall Be Cut To Length And The Ends Seal Welded Between Web And Flange Before Galvanizing.

SIDE VIEW FRONT VIEW

W6 X 8.5 Or W6 X 9 STEEL POST

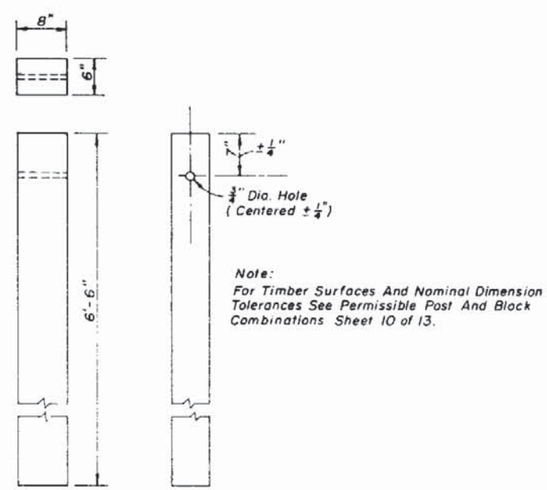

Note:
For Timber Surfaces And Nominal Dimension Tolerances See Permissible Post And Block Combinations Sheet 10 of 13.

SIDE VIEW FRONT VIEW

TIMBER POST

STANDARD TIMBER AND STEEL GUARDRAIL POST

STATE OF FLORIDA DEPARTMENT OF TRANSPORTATION
ROAD DESIGN

GUARDRAIL

	Names	Dates
Designed 2:		
Drawn 2:	J M	8/81
Checked 2:	JVG/JSW	8/81
F H W A Approved		10/8/81

Approved By: Deputy Design Engineer, Roadways

Revision No.	Sheet No.	Index No.
86	11 of 13	400

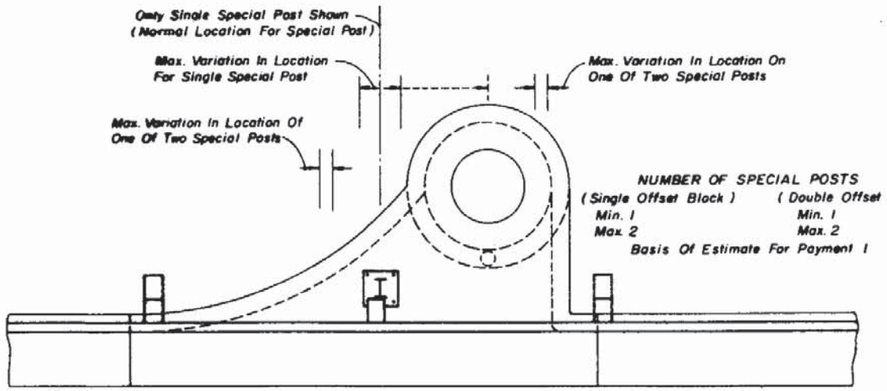

CURB INLET TYPE 1

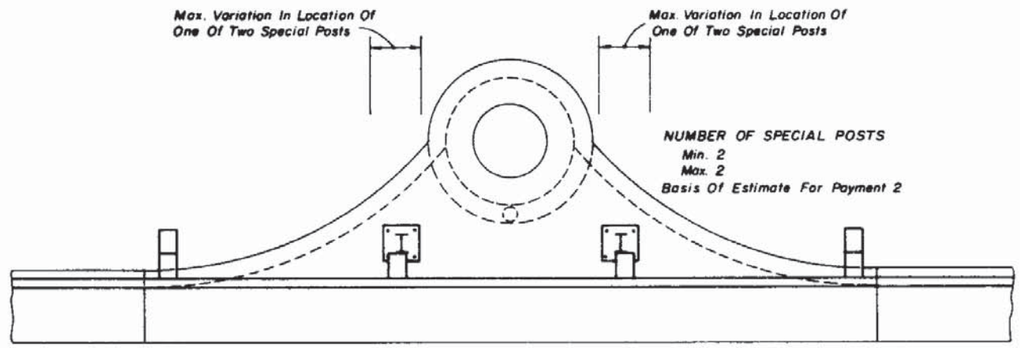

CURB INLET TYPE 2

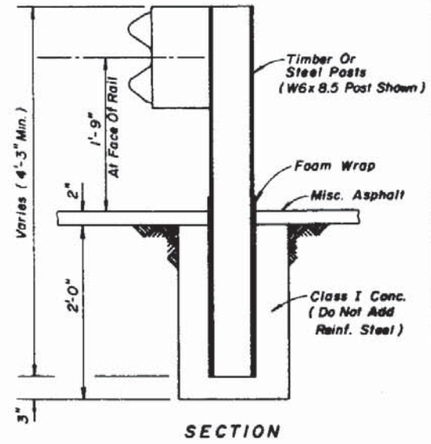

SECTION

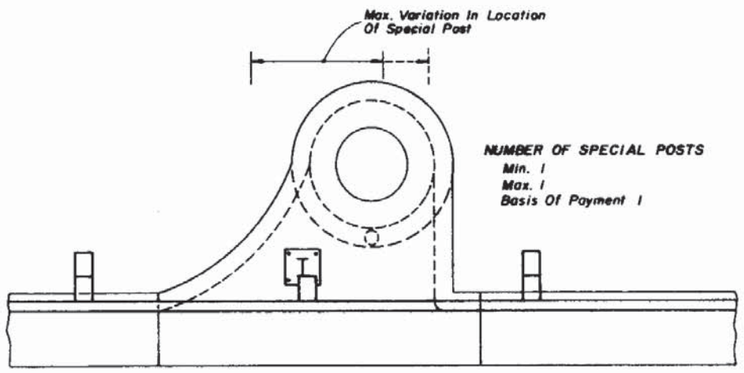

CURB INLET TYPE 3

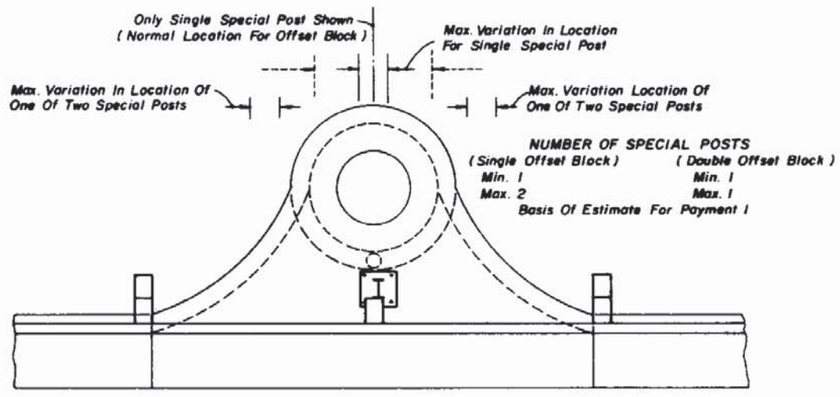

CURB INLET TYPE 4

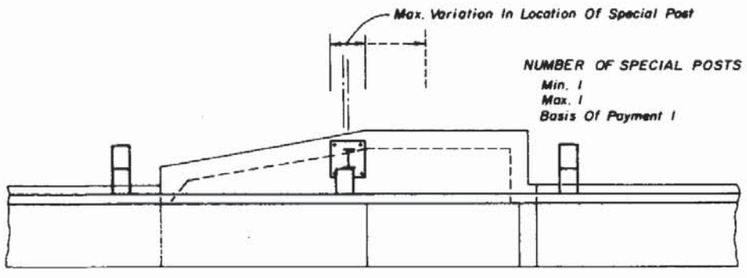

CURB INLET TYPE 5

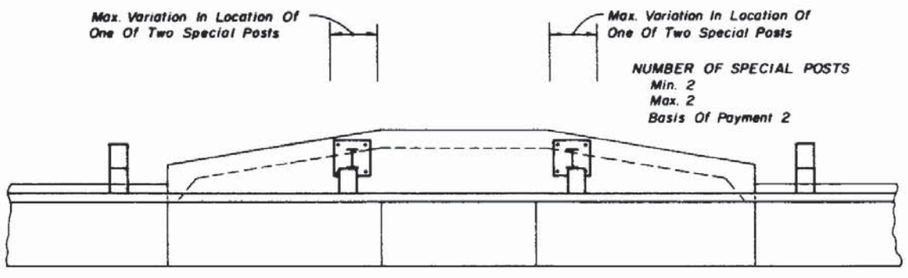

CURB INLET TYPE 6

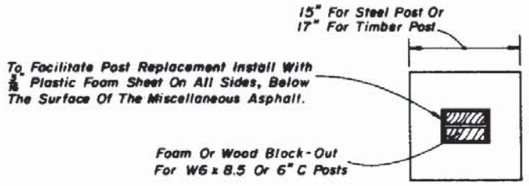

PLAN
(SQUARE OPTION)

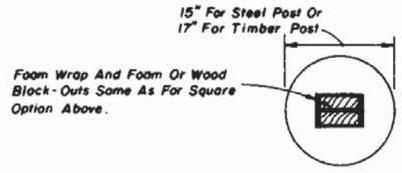

PLAN
(ROUND OPTION)

TO BE USED PRINCIPALLY OVER SHALLOW UTILITIES

ENCASED GUARDRAIL POST

Notes:

1. The locations shown for special posts mounted on inlets are to be used as guidelines for positioning the posts and for estimating the number of required posts.
2. Special posts and their anchorages mounted on curb inlets shall be in accordance with special steel guardrail posts Sheet 11 of 13, and paid for under the contract unit price for Special Guardrail Post, each.
3. Variations shown for the locations of special posts mounted on inlets are established from standard post spacing (6'-3"); clearance of standard posts from inlets (4"min.); use of single and double offset blocks on standard posts adjacent to the inlets; optional flange mountings; and, concrete anchor edge distances (2" for grouted and 3 3/4" for expansion anchors). The number of posts and their locations may vary by reducing post spacing and adjusting the length of rail panel(s).
4. Encased guardrail posts shall conform in section to standard timber and steel posts, and be paid for under the contract unit price for Special Guardrail Post, each. Payment shall include cost of foam wrap and concrete encasement.

LEGEND

Variation In Location Of Special Post:

Single Offset Block(s) On Adjacent Standard Post(s)

Expanded Location By Using Double Offset Blocks On Adjacent Standard Post(s)

SPECIAL POST LOCATIONS ON CURB INLETS

STATE OF FLORIDA DEPARTMENT OF TRANSPORTATION
ROAD DESIGN

GUARDRAIL

	Names	Dates
Designed by		
Drawn by	HSD	8/83
Checked by	JVG	8/83

Approved By
Deputy Design Engineer, Roadways

F.H.W.A. Approved : 10/6/83

Revision No.	Sheet No.	Index No.
85	12 of 13	400

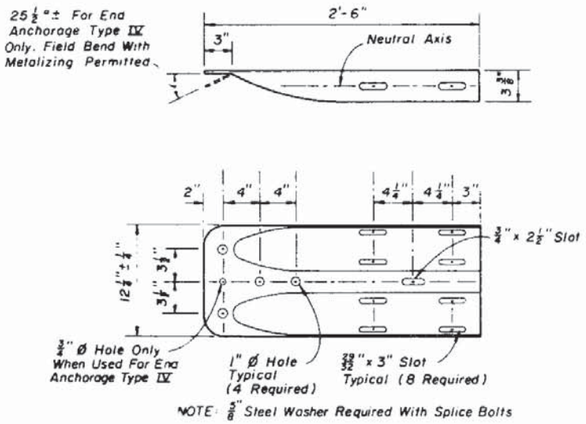

SPECIAL END SHOE

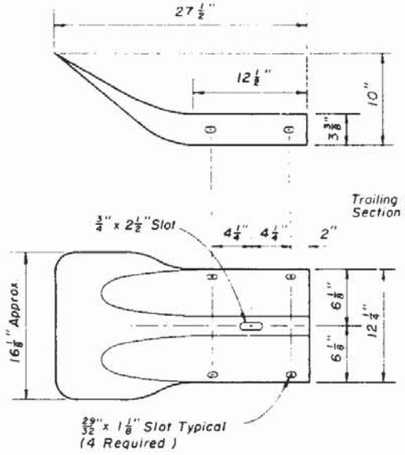

FLARED END SECTION

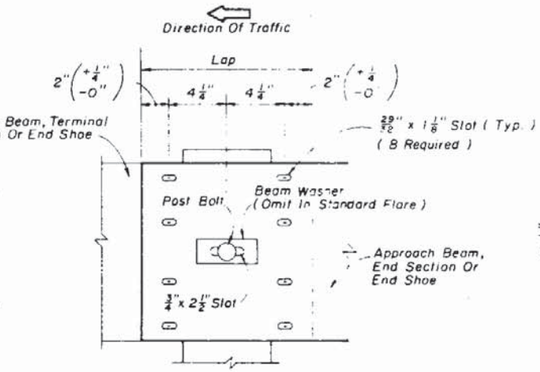

RAIL SPLICE

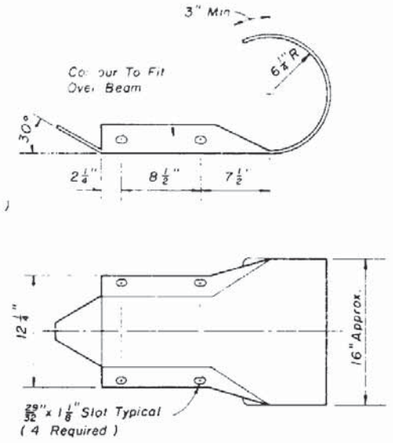

ROUNDED END SECTION

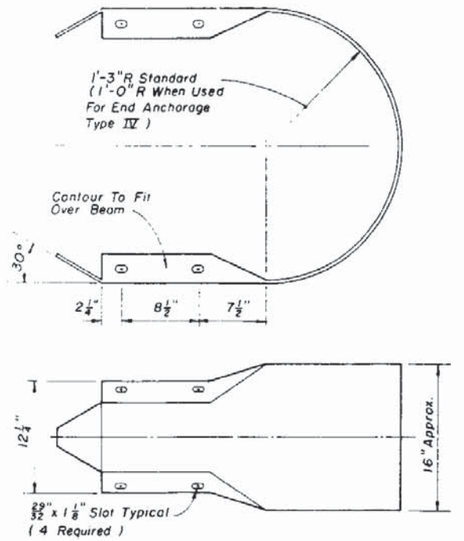

BUFFER END SECTION

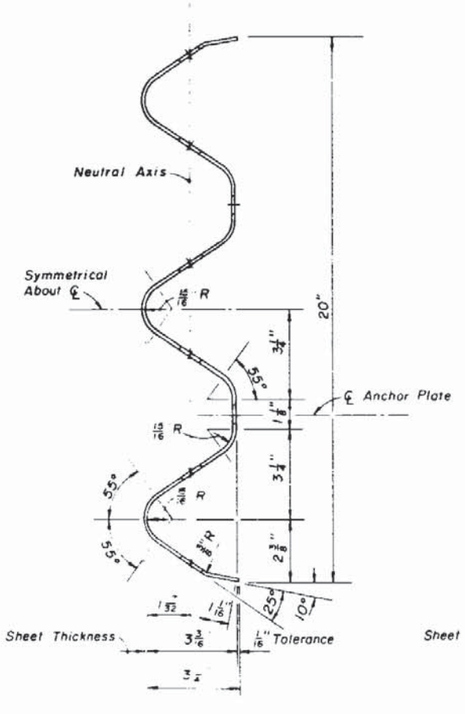

PRIMARILY USED FOR MEDIAN INSTALLATIONS. A SPECIAL DETAIL SHALL BE SUBMITTED TO THE STATE DESIGN ENGINEER, ROADWAYS FOR APPROVAL PRIOR TO INCLUSION IN THE PLANS.

THRIE BEAM

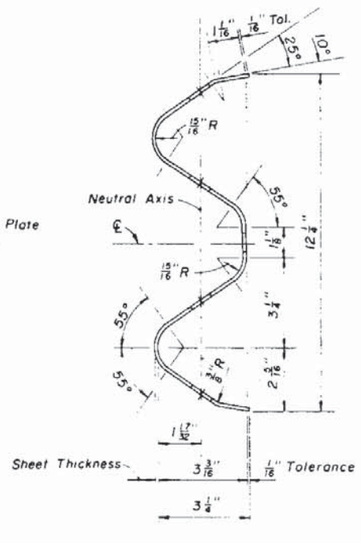

W BEAM

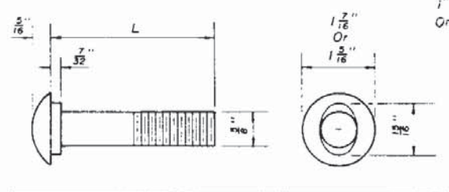

L	Thread Length	Application
1¼"	Full Length	Rail Splice Bolt
2"	1½" Min.	Rail To Steel Offset Block Bolt
9½"	1¾" Min.	Post Bolt - Single Faced Guardrail Timber Block On Steel Post
18"	2½" Min.	Post Bolt - Single Faced Guardrail Timber Posts
25"	2" Min.	Post Bolt - Double Faced Guardrail Timber Posts

Note: Specifications same as for hex bolts.

⅝" BUTTON HEAD BOLT

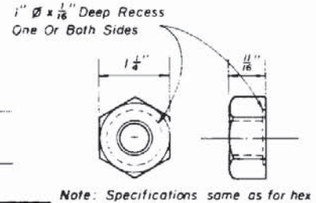

Note: Specifications same as for hex nuts.

⅝" RECESS NUT

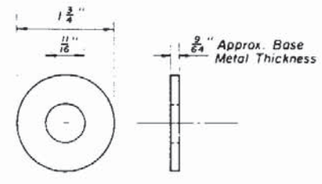

⅝" STEEL WASHER

Hex bolts shall conform to the requirements of A.S.T.M. A307 and hex nuts to the requirements of A.S.T.M. A563, Grade A or better. Heavy hex nuts may be used in lieu of hex nuts and hex nuts used for jam nuts.

HEX BOLTS AND NUTS

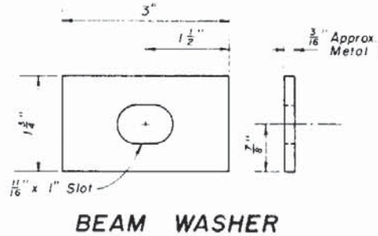

BEAM WASHER

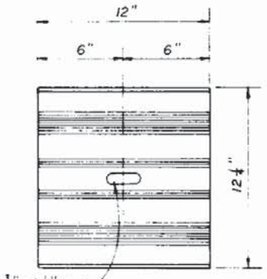

Note: Back up plate is placed behind rail elements at intermediate (non splice) post with steel offset blocks only.

BACK-UP PLATE

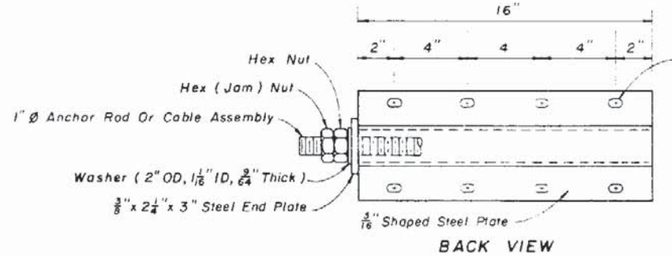

BACK VIEW

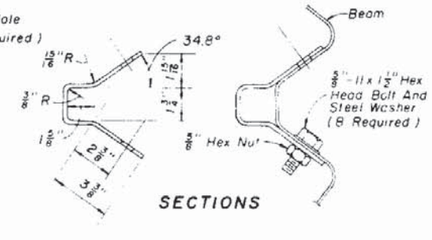

SECTIONS

ANCHOR PLATE

STATE OF FLORIDA DEPARTMENT OF TRANSPORTATION
ROAD DESIGN

GUARDRAIL

	Names	Dates
Designed by		
Drawn by	HSD	8/81
Checked by	JBW/JVG	8/81
F.H.W.A. Approved:		10/8/81

Approved By
Deputy Design Engineer, Roadways

Navis on No.	Sheet No.	Index No.
86	13 of 13	400

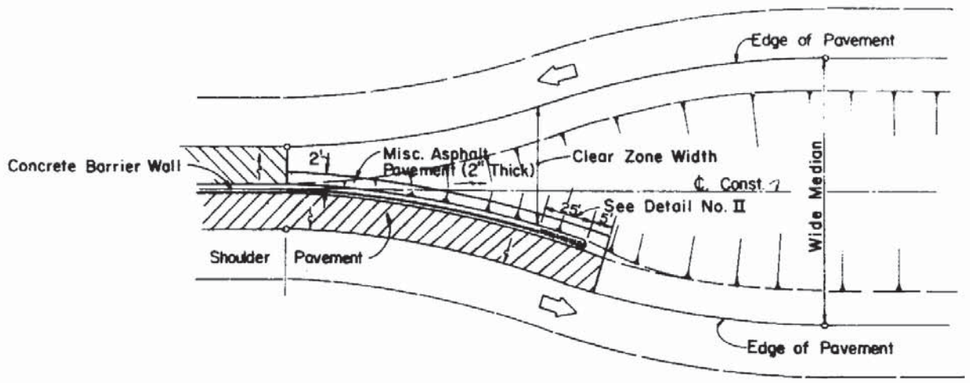

CONCRETE BARRIER WALL TRANSITION BETWEEN WIDE AND NARROW MEDIANS
DETAIL A

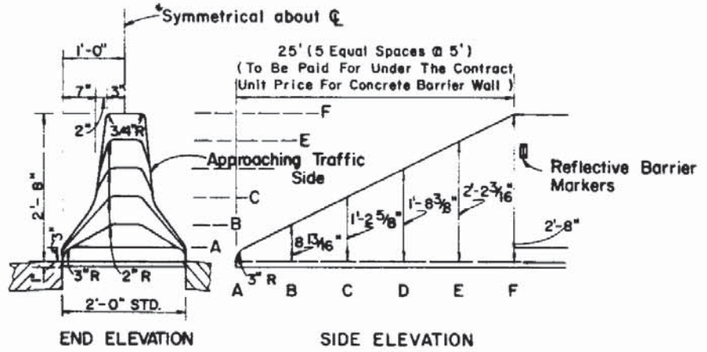

TO BE USED ONLY AS A TEMPORARY BARRIER TERMINAL OR WHERE TERMINAL LOCATED CLEAR ZONE WIDTH FROM EDGE OF THE NEAR APPROACH DRIVING LANE. (SEE DETAIL A)

CONCRETE BARRIER WALL TERMINAL
DETAIL II

REFLECTIVE BARRIER MARKER SPACING ON WALL			
Distance - Edge of travel lane to barrier wall.	Spacing	Number per side	REMARKS
1' to < 4'	40'	1	Use amber markers only. Hold or clamp reflective barrier markers to wall until dry or set. Use 10' spacing on terminal ends.
4' to < 8'	80'	1	
> than 8'	none required		

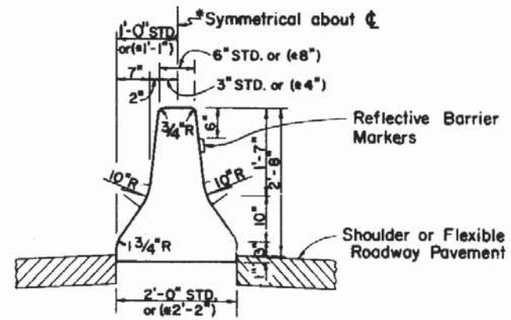

* Use 8" top, 2'-2" base when 10" light poles are installed within barrier wall line.

For concrete median barrier wall details at piers, highway lighting and guardrail connections, see Sheet 2 of 2.

For median barrier and 'special' barrier wall inlet details see Index No. 217.

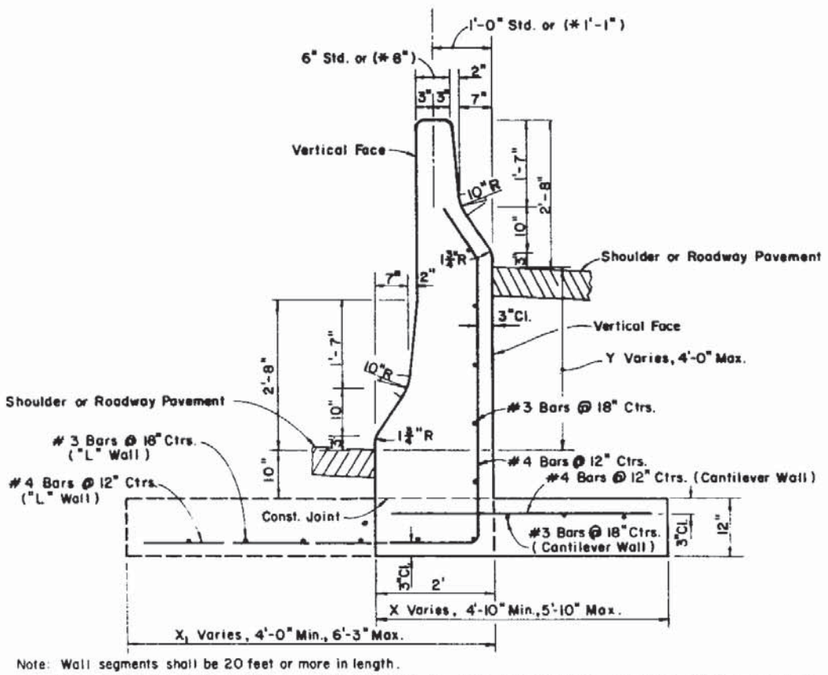

Note: Wall segments shall be 20 feet or more in length.

Design Criteria: Vehicle - 4000 lbs., 60 mph, 25° Avg. Lat. Impact Decel. And Force - 7G's & 28 Kips; Veh. Forces Appl. - 1000 lbs. Vert. At Top Of Toe, 28 Kips At 5½ Above Pavt.

Unless the plans stipulate a specific wall type, either the cantilever wall or the "L" wall may be constructed at the Contractors option.

Steel not required in cantilever walls of heights Y = 0'-0" and 0'-6" when footing and stem cast as one unit. When footing and stem cast seperately by construction joint, the footing joint surface shall be roughened and No. 4 dowels 24" long installed at 24" centers along the joint. Cost of the steel and concrete footing to be included in the contract unit price for Concrete Barrier Wall, L.F. See General Note No. 8 for details of connection and reinforcement required when wall is continuous with standard barrier wall.

	Height Y	0'-0"	0'-6"	1'-0"	1'-6"	2'-0"	2'-6"	3'-0"	3'-6"	4'-0"
Cantilever Wall	Width X	4'-10"	5'-0"	5'-2"	5'-3"	5'-5"	5'-6"	5'-7"	5'-9"	5'-10"
"L" Wall	Width X_1	4'-0"	4'-4"	4'-8"	5'-0"	5'-3"	5'-6"	5'-9"	6'-0"	6'-3"

MEDIAN BARRIER WALL FOR SUPERELEVATED SECTION OR FOR VARIABLE ROADWAY PROFILE GRADES

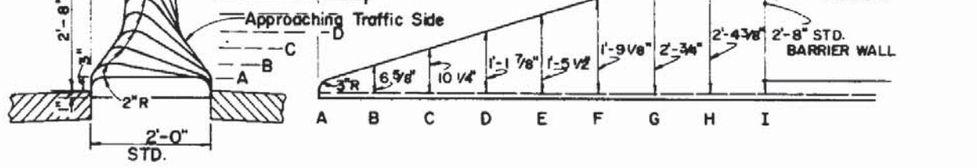

DESIGN SPEED 45 M.P.H. OR LESS

CONCRETE BARRIER WALL TERMINAL FOR NARROW MEDIAN
DETAIL III

GENERAL NOTES:

1. Class II concrete shall be used for all reinforced and plain (nonreinforced) concrete barrier walls.
2. Cost of installation of all conduits and utility accessories, reinforcing steel and reflective barrier markers shall be included in the contract unit price for Concrete Barrier Wall, LF.
3. Terminal Barrier Notes for Design Speeds greater than 45 m.p.h.:
   a. Terminated in a wide median section outside recovery area of the approach traffic - See Detail A.
   b. Terminated from a shielded location.
   c. Terminal protection by the use of an impact attenuator system.
   d. Terminated in conjunction with a suitably designed transition to another type median barrier that can be introduced more safely.
4. Expansion joints in wall required only at bridge ends and/or at locations where wall is an integral part of existing or proposed concrete slab to match an existing or proposed expansion joint.
5. Expansion joints in conduits shall be required only at the expansion joints in the wall.
6. When the barrier is installed adjacent to the pavement the top 12" of the subgrade shall be compacted to at least 100% of the density as defined in the AASHTO T-99 specifications.
7. Cast-in-place barrier wall normally will be a continuous pour without transverse contraction joints. Cast-in-place segments with a length < 40' shall be joined to adjacent sections by doweling. See Detail B.
8. Precast construction is allowed as an alternate to cast-in-place construction.
   a. Wall segments less than 40' in length shall be joined by a transverse joint in accordance with Details C & D. The minimum segment length is 20'.
   b. Bedding of the precast sections shall be facilitated by the use of sand-cement grout or equal method to assure uniform bearing.
   c. Reinforcement may be required for handling stresses.

Continued

STANDARD BARRIER WALL SECTION

9. Concrete barrier walls that are continuous over roadway and bridge shall be pin connected at the roadway end of the approach slab. Both cast-in-place and precast roadway barrier walls shall be connected at the approach slab by Option 3 end treatments, and reinforced for a distance of 12 feet from the connection in accordance with Index No. 415. Median and outside barrier walls on the approach slab shall be designed, constructed and paid for as a part of the approach slab. Pins shall remain free but secured from ready removal by spot welding a ½" Ø x 2" stud approximately 3 inches below the upper pair of eye bars.
This connection method also applies to standard barrier walls that are continuous with median barrier walls for superelevated sections and for variable roadway profile grades (see detail left.).

STATE OF FLORIDA DEPARTMENT OF TRANSPORTATION
ROAD DESIGN

CONCRETE BARRIER WALL

	Names	Dates
Designed by		
Drawn by	A F	6/73
Checked by	L M F	7/73

Approved By: Deputy Design Engineer, Roadways

F.H.W.A. Approved: 5/20/77

Revision No.	Sheet No.	Index No.
86	1 of 8	410

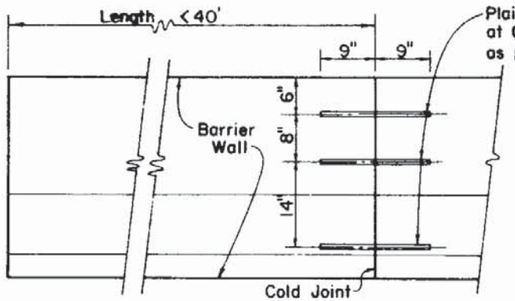

DOWELED TRANSVERSE CONSTRUCTION JOINT DETAIL B

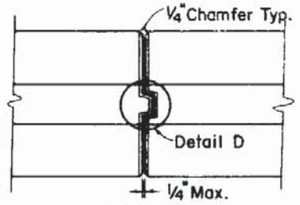

TOP VIEW

DETAIL C

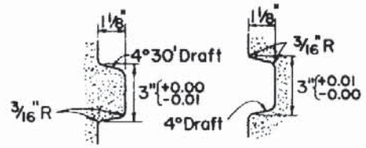

DETAIL D

PRECAST BARRIER TRANSVERSE JOINTS

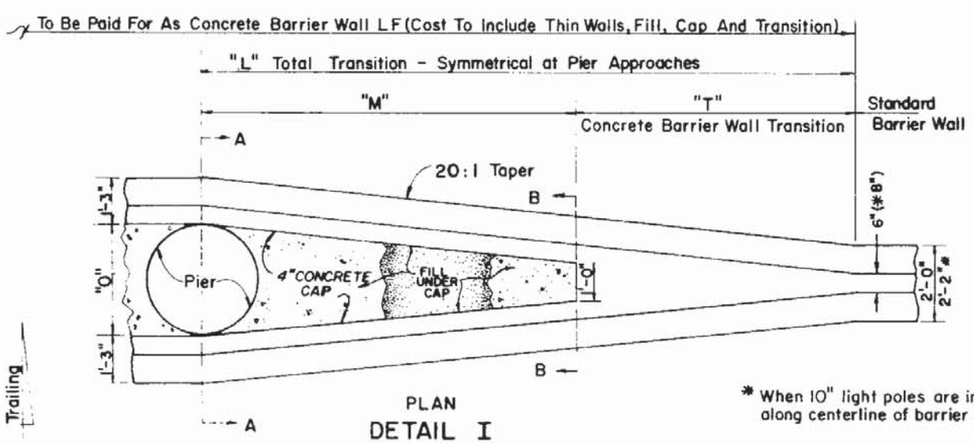

PLAN

DETAIL I

* When 10" light poles are installed along centerline of barrier wall.

DIMENSIONS - DETAIL I				
"O" Varies 3' Shown	"L" Total Trans.	"M" Barrier Wall	"T" Std. to M. Trans.	WALL TYPE
3'	35.8'	20.8'	15.0'	STD., (6" Top, 2'-0" Base)
3'	34.2'	20.8'	13.4'	* (8" Top, 2'-2" Base)

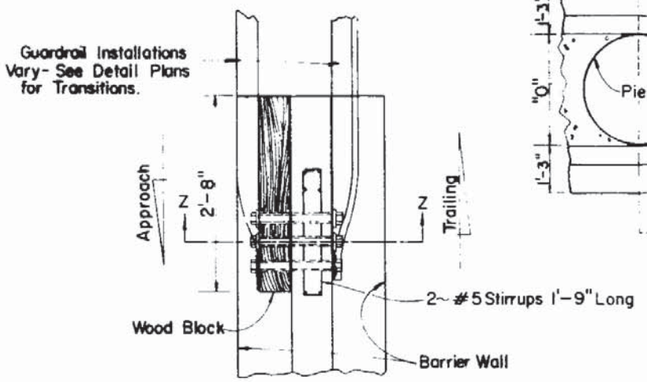

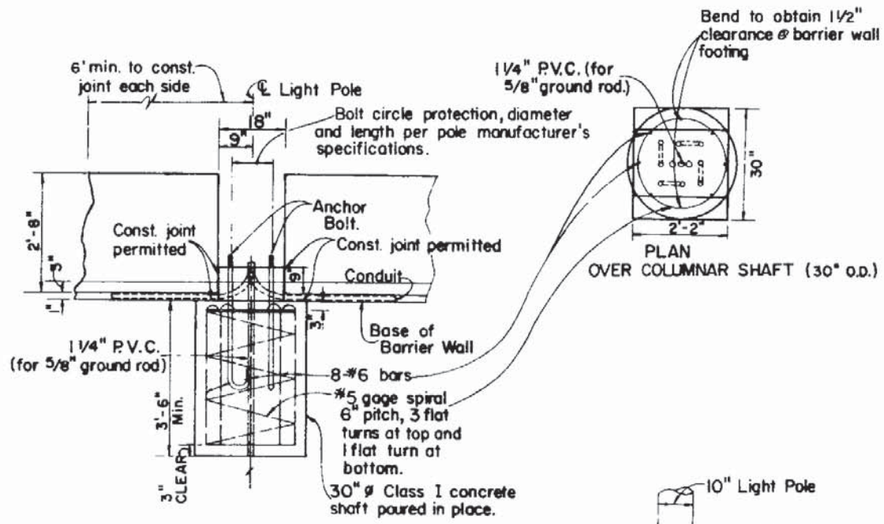

PLAN
OVER COLUMNAR SHAFT (30" O.D.)

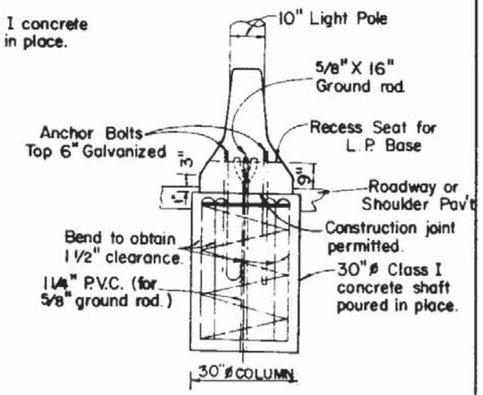

SECTION

10" LIGHT POLE MOUNTING IN MEDIAN BARRIER WALL WITH 8" TOP, 2'-2" BASE

NOTES:

Bolt circle: 8" pole - 11½", 10" pole - 15"

Refer to Highway Lighting Plans for size of Conduit

Payment for the 30" ø concrete column including reinforcing steel, anchor bolts and accessories shall be included in the contract unit price for Lighting Pole complete, Highway Lighting.

Symmetrical about ℄ for uni-directional flow - Approach End of Wall

Symmetrical about ℄ for uni-directional flow - Trailing End of Wall

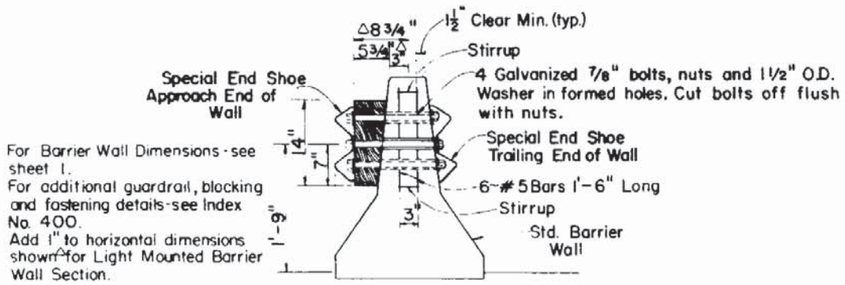

SECTION Z Z

GUARDRAIL CONNECTION TO STD. CONCRETE BARRIER WALL

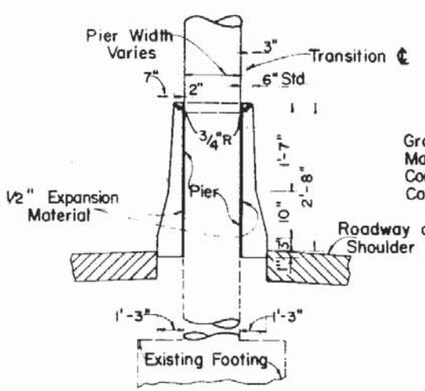

SECTION A A

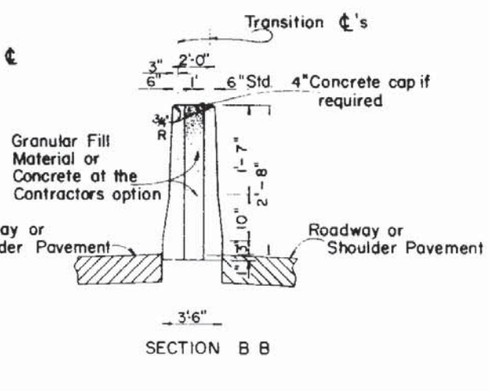

SECTION B B

CONCRETE MEDIAN BARRIER WALL (THIN WALLS, FILL, CAP AND TRANSITION)

STATE OF FLORIDA DEPARTMENT OF TRANSPORTATION
ROAD DESIGN

CONCRETE BARRIER WALL

	Names	Dates
Designed by		
Drawn by	A F	6/73
Checked by	L M F	7/73
F H W A	Approved	10/8/78

Approved By _____ Deputy Design Engineer, Roadways

Revision No.	Sheet No.	Index No.
86	2 of 8	410



SECTION AA

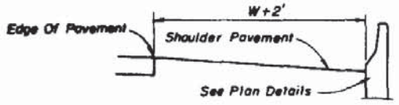

SECTION BB

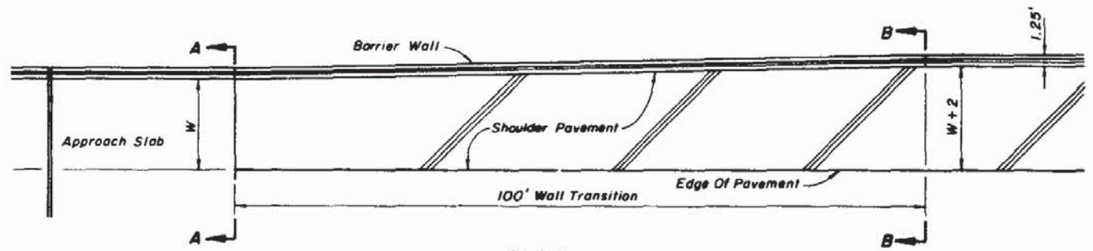

PLAN

TRANSITIONS AT BRIDGES FOR BARRIER WALL ON RETAINING WALL

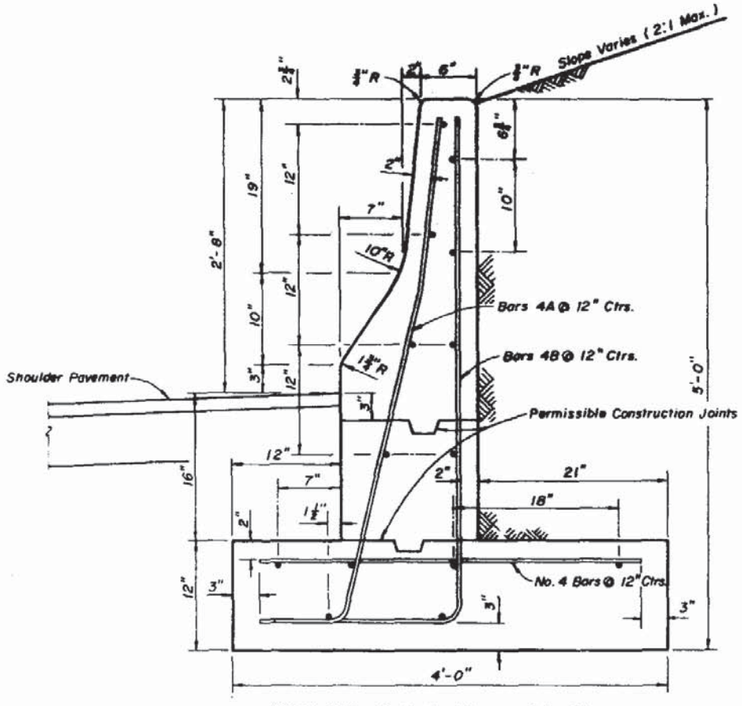

NOTE: All longitudinal reinforcement No. 4 bars.
Minimum segment length for this wall is 20 feet.
Wall to be paid for under the contract unit price
for Concrete Barrier Wall (Rigid) (Retaining), L.F.

REINFORCED CONCRETE BARRIER WALL (RETAINING)

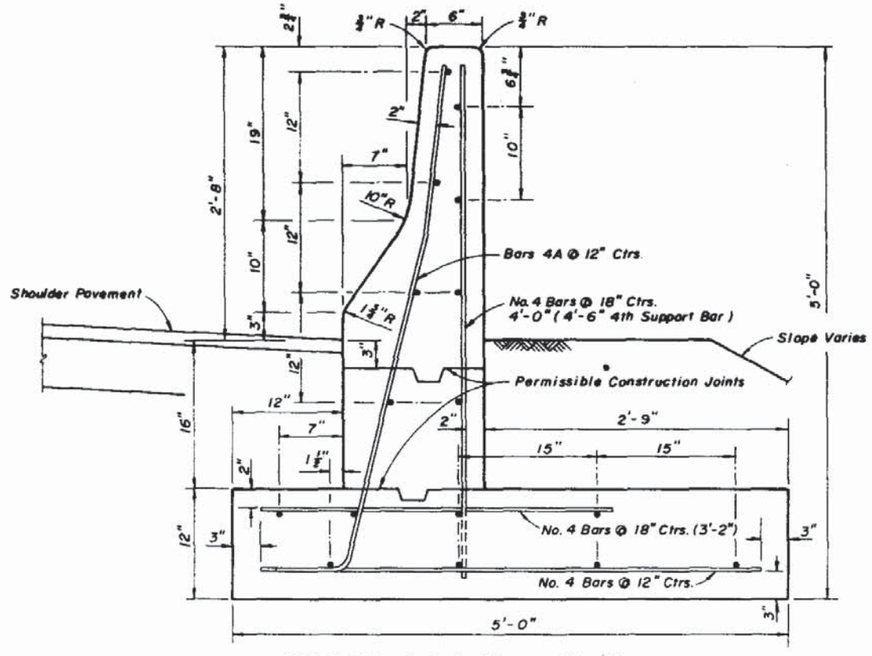

NOTE: All longitudinal reinforcement No. 4 bars.
Minimum segment length for this wall is 20 feet.
Wall to be paid for under the contract unit price
for Concrete Barrier Wall (Rigid) (Shoulder), L.F.

REINFORCED CONCRETE BARRIER WALL (SHOULDER)

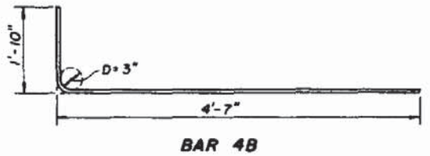

BAR 4B

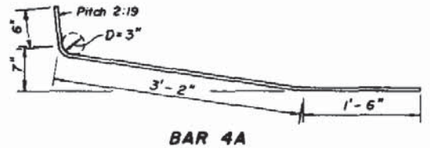

BAR 4A

BENDING DIAGRAM

WALL TYPE	CLASS II CONCRETE C.Y. Per Lin. Ft.	REINFORCING STEEL LBS Per Lin. Ft.
Retaining	0.29	20
Shoulder	0.32	21

RIGID BARRIER WALL

STATE OF FLORIDA DEPARTMENT OF TRANSPORTATION
ROAD DESIGN

CONCRETE BARRIER WALL

	Notes	Dates
Designed by		
Drawn by	HSD	9/85
Checked by	JVG	9/85

Approved By: _____
State Design Engineer, Roadways

F.H.W.A. Approved :

Revision No.	Sheet No.	Index No.
86	3 of 8	410

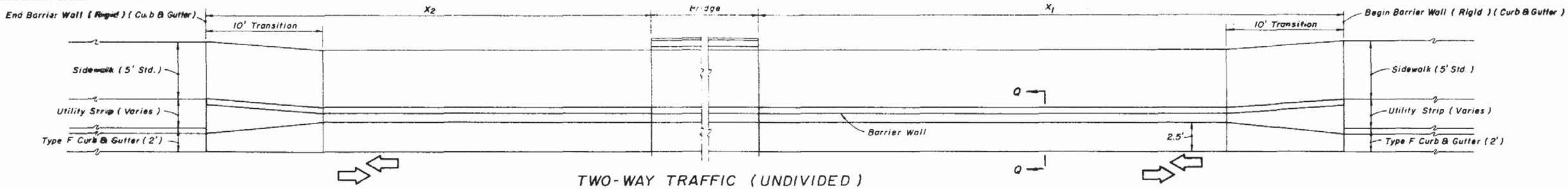

TWO-WAY TRAFFIC (UNDIVIDED)

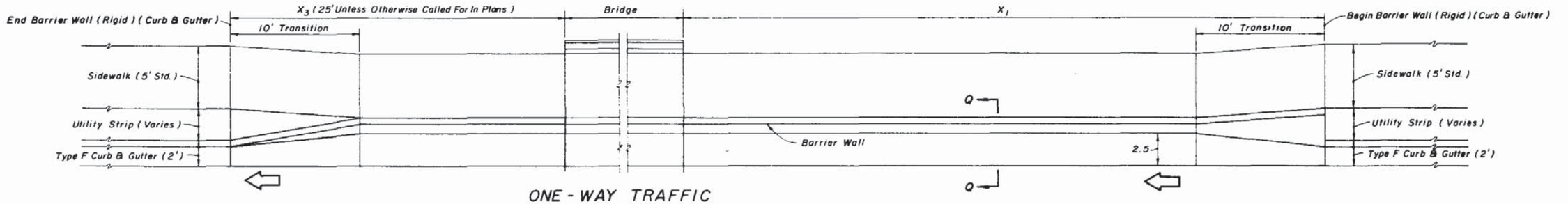

ONE - WAY TRAFFIC

FOR VALUES X_1 & X_2 SEE 'LENGTH OF ADVANCEMENT' SHEET 8 OF 8

BRIDGE END HAZARD

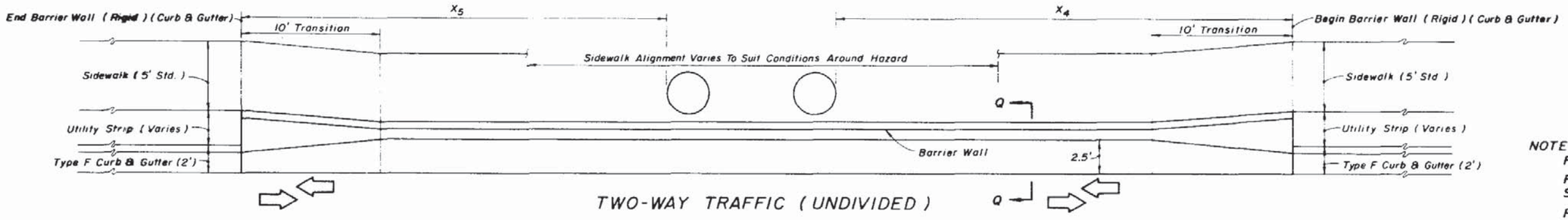

TWO-WAY TRAFFIC (UNDIVIDED)

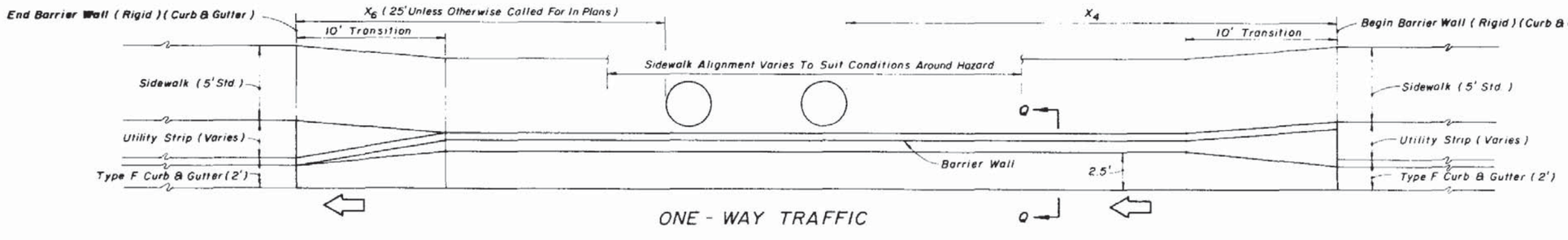

ONE - WAY TRAFFIC

Near Lane Approach					
Design Speed (mph)	X_4 (Min. Length) ⊙				
	Over 6000 VPD	2000-6000 VPD	800-2000 VPD	250-800 VPD	Under 250 VPD
40-45	200	181	163	150	131
Less Than 40	150	138	125	113	100

Opposing Lane Approach (2-Lanes)					
Design Speed (mph)	X_5 (Min. Length) ⊙				
	Over 6000 VPD	2000-6000 VPD	800-2000 VPD	250-800 VPD	Under 250 VPD
40-45	53	48	44	40	35
Less Than 40	40	37	34	30	27

Opposing Lane Approach (More Than 2-Lanes)					
Design Speed (mph)	X_5 (Min. Length) ⊙				
	Over 6000 VPD	2000-6000 VPD	800-2000 VPD	250-800 VPD	Under 250 VPD
40-45	31	28	25	25	25
Less Than 40	25	25	25	25	25

HAZARD 4' OR LESS FROM FACE OF CURB

NOTE:

For locations without utility strips see Sheet 5 of 8.

For transition, sidewalk and sectional details see Sheet 6 & 7 of 8.

For length of advancement for bridge end hazards and for other objects located more than 4' from face of curb that require shielding see Sheet 8 of 8.

⊙ The tabular lengths shown are for hazards located at or immediately within the outer portion of the clear zone. The 2.5' offsets to toe of barrier wall cannot be reduced to accommodate hazards; however, hazards located in the stem of the wall can be accommodated by the detail on Sheet 8 of 8.

STATE OF FLORIDA DEPARTMENT OF TRANSPORTATION
ROAD DESIGN

CONCRETE BARRIER WALL

	Names	Dates
Designed By		
Drawn By	HSD	10/85
Checked By	JBW/JVG	10/85
F.H.W.A. Approved		

Approved By
State Design Engineer, Roadways

Revision No	Sheet No	Index No.
86	4 of 8	410

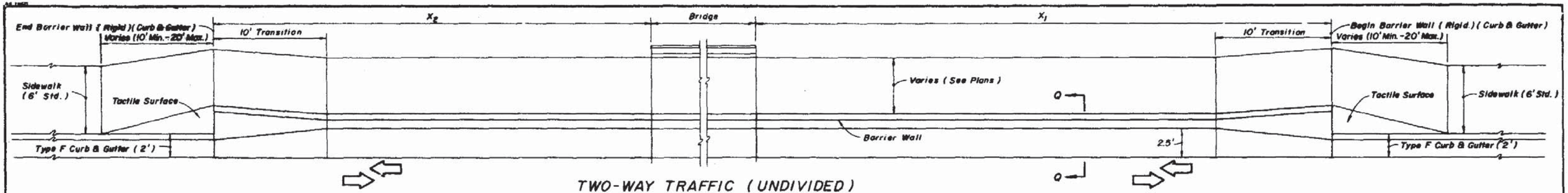

TWO-WAY TRAFFIC (UNDIVIDED)

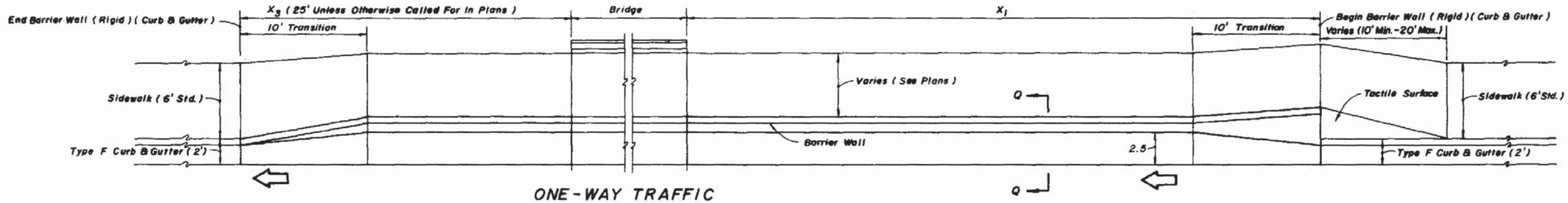

ONE-WAY TRAFFIC

FOR VALUES X_1 & X_2 SEE 'LENGTH OF ADVANCEMENT' SHEET 8 OF 8

BRIDGE END HAZARD

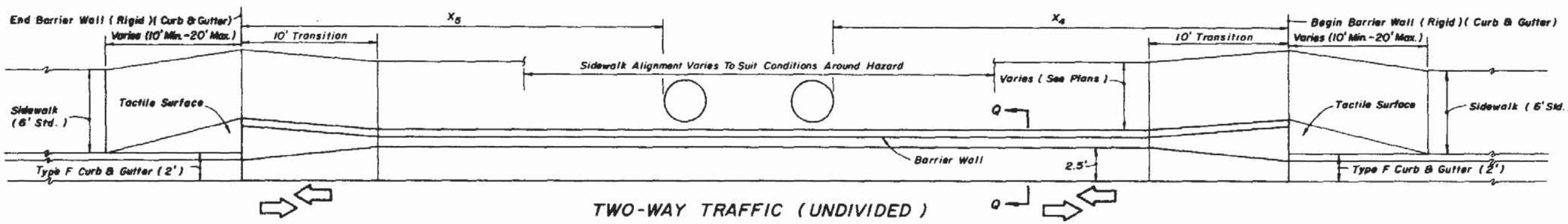

TWO-WAY TRAFFIC (UNDIVIDED)

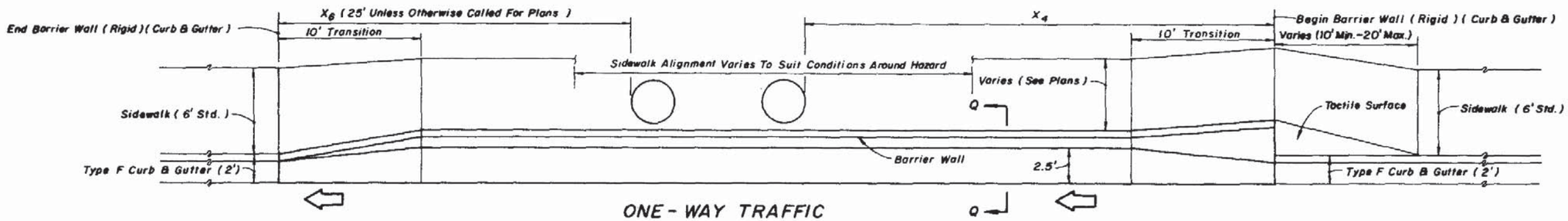

ONE-WAY TRAFFIC

FOR VALUES X_4 & X_5 SEE TABLES SHEET 4 OF 8

HAZARD 4' OR LESS FROM FACE OF CURB

NOTE :

For locations with utility strips see Sheet 4 of 8.

For transition, sidewalk and sectional details see Sheet 6 & 7 of 8.

For length of advancement for bridge end hazards and for other objects located more than 4' from face of curb that require shielding see Sheet 8 of 8.

See Sheet 4 of 8 for tabular lengths applicable to 'Hazard 4' Or Less From Face Of Curb' and accompanying footnote.

STATE OF FLORIDA DEPARTMENT OF TRANSPORTATION
ROAD DESIGN

CONCRETE BARRIER WALL

	Name	Date
Designed by		
Drawn by	HSD	10/85
Checked by	JBW/JVG	10/85
F.H.W.A. Approved:		

Approved By
State Design Engineer, Roadways

Revision No.	Sheet No.	Index No.
86	5 of 8	410

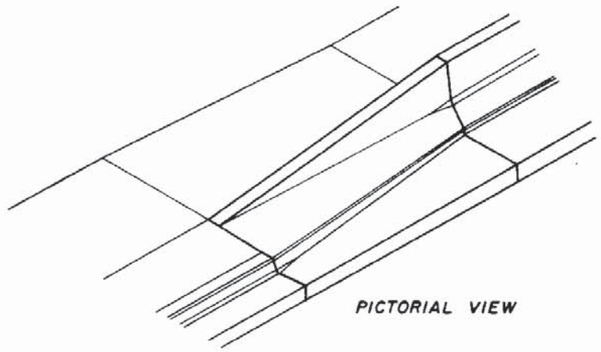

PICTORIAL VIEW

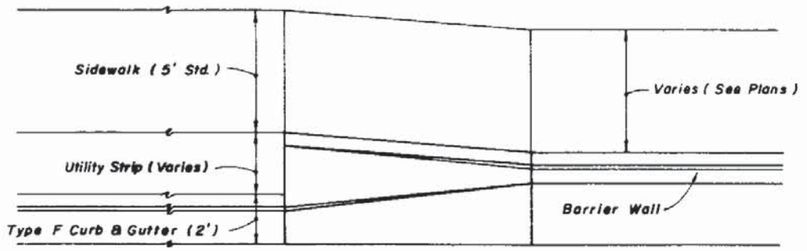

PLAN

WITH UTILITY STRIP

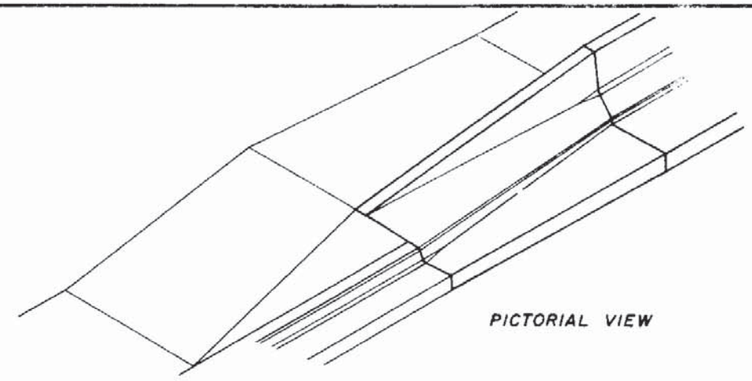

PICTORIAL VIEW

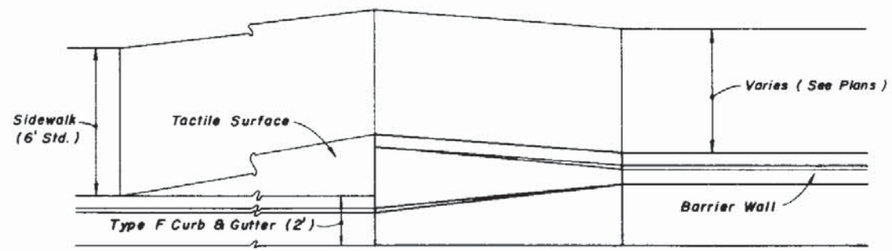

PLAN

WITHOUT UTILITY STRIP

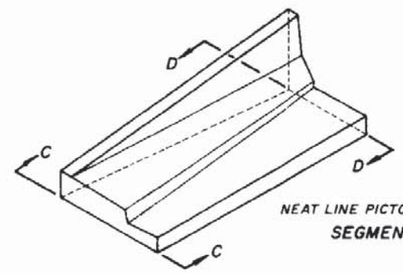

NEAT LINE PICTORIAL VIEW

SEGMENT

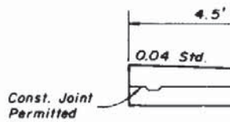

SECTION CC

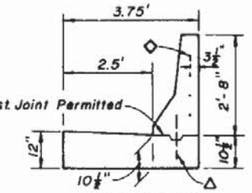

SECTION DD

◇ See Sheet 7 Of 8.

△ See Sheet 7 Of 8.

TWO-WAY TRAFFIC (OPPOSING LANE APPROACH)

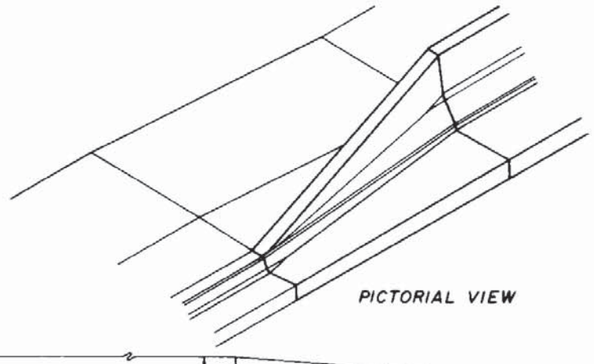

PICTORIAL VIEW

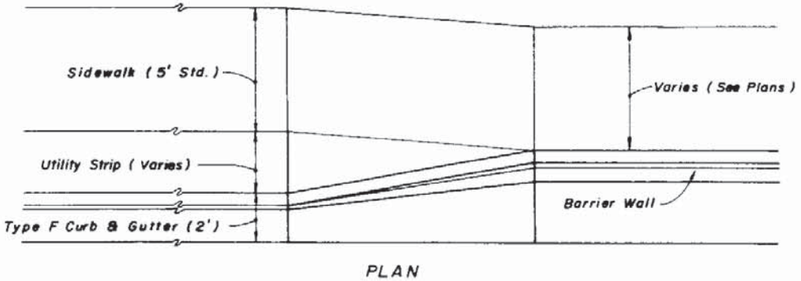

PLAN

WITH UTILITY STRIP

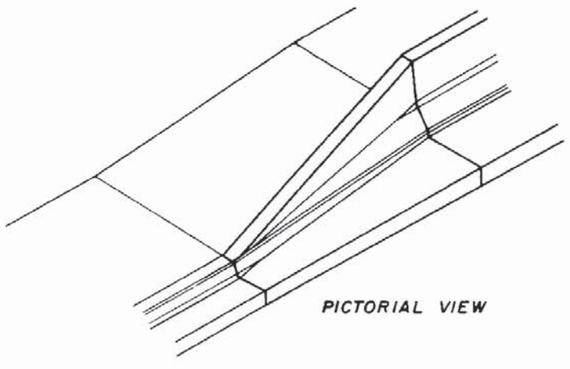

PICTORIAL VIEW

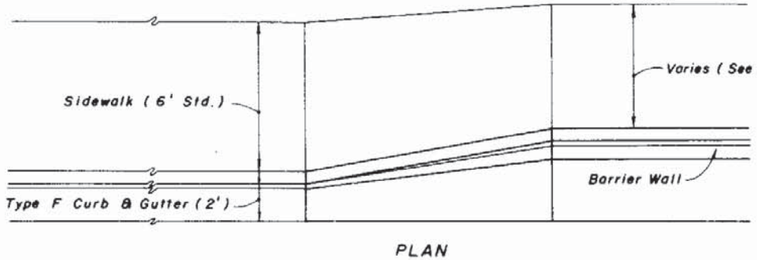

PLAN

WITHOUT UTILITY STRIP

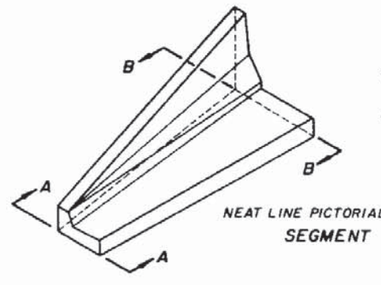

NEAT LINE PICTORIAL VIEW

SEGMENT

◇ See Sheet 7 Of 8.

△ See Sheet 7 Of 8.

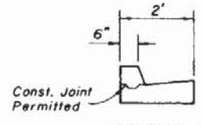

SECTION AA

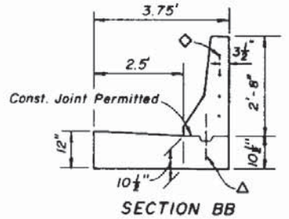

SECTION BB

ONE-WAY TRAFFIC (TRAILING END)

TRANSITION SEGMENTS FOR 'CONCRETE BARRIER WALL (RIGID) (CURB & GUTTER)

STATE OF FLORIDA DEPARTMENT OF TRANSPORTATION
ROAD DESIGN

CONCRETE BARRIER WALL

	Names	Dates
Designed by		
Drawn by	HSD	10/85
Checked by	JBW/JVG	10/85
F.H.W.A. Approved:		

Approved By _____
State Design Engineer, Roadways

Revision No.	Sheet No.	Index No.
86	6 of 8	410

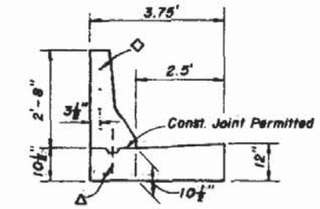

SECTION BB

◇ See Notes This Sheet

△ See Notes This Sheet

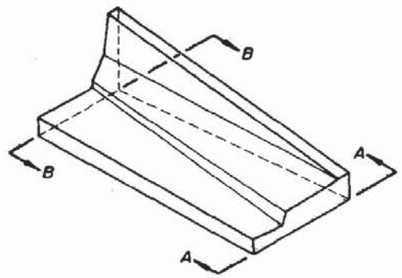

WITH OR WITHOUT UTILITY STRIP

NEAT LINE PICTORIAL VIEW

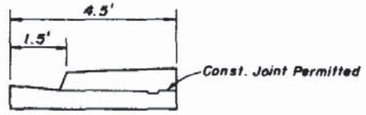

SECTION AA

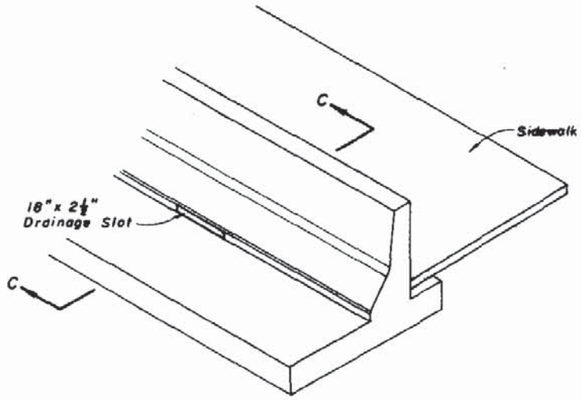

NEAT LINE PICTORIAL VIEW

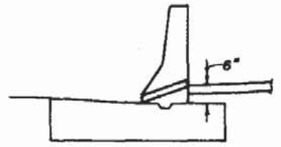

SECTION CC

Note: Drainage slots shall be located at all low points along the sidewalk, and, unless otherwise shown in the plans, slots shall be spaced at intervals not exceeding 50 feet in fill sections and 20 feet in cut sections.

Slots shall be located such that only one bar is cut away or deleted in front and back lines of vertical reinforcement.

SIDEWALK DRAINAGE SLOT FOR BARRIER WALL (RIGID) (CURB & GUTTER)

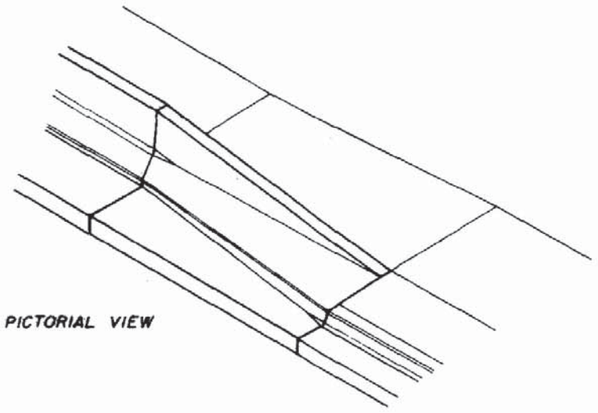

PICTORIAL VIEW

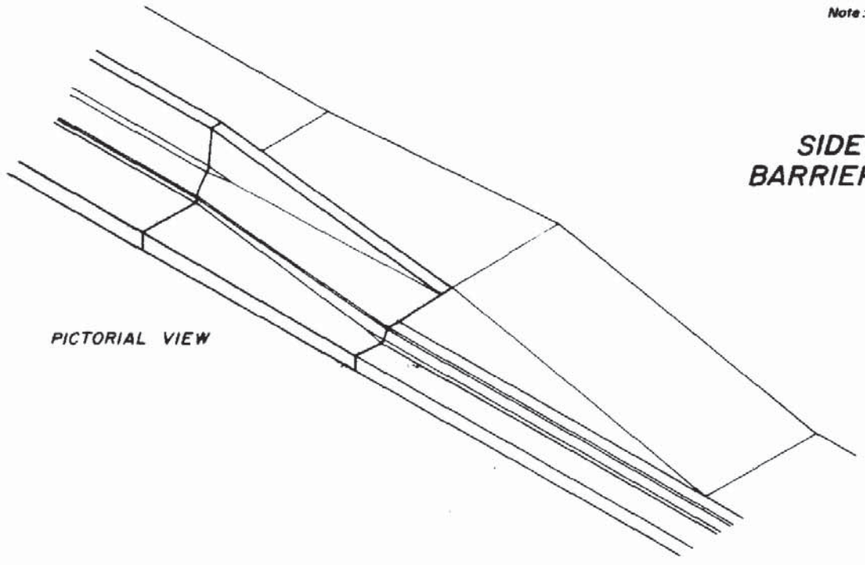

PICTORIAL VIEW

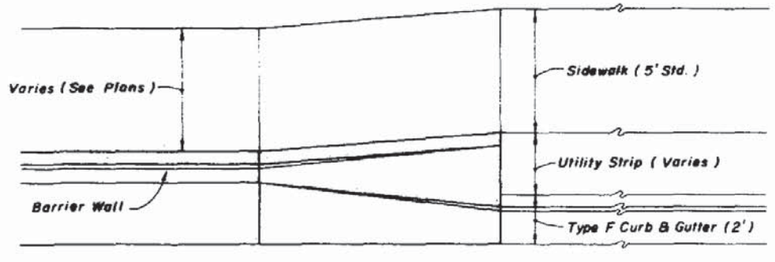

PLAN

WITH UTILITY STRIP

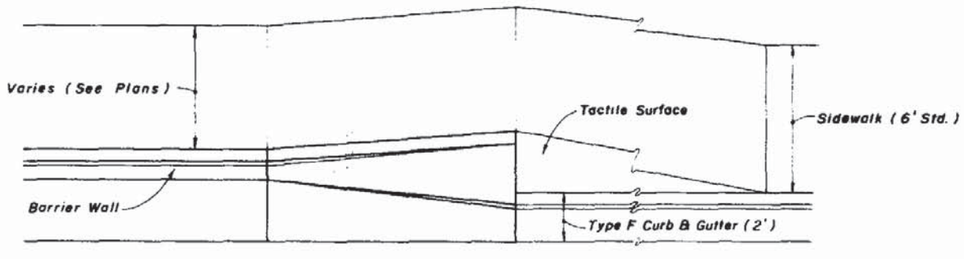

PLAN

WITHOUT UTILITY STRIP

NOTE:

◇ Transition Segments Shall Be Doweled Into The End Of The Barrier Wall In The Following Manner:
Four 1¼" diameter holes 6" deep on 6" centers shall be drilled in the end of the barrier and No. 6 bars 15" long set in epoxy mortar. The ends of the dowels extending into the transition segment shall be wrapped with one layer of 15 lb. asphalt felt with the ends crimped.

△ When Construction Joints Are Utilized For Transition Segment Construction The Stem Shall Be Doweled To The Footing In The Following Manner:
Five No. 4 bars 15" long shall be embedded 7" into the footing. The dowels shall be spaced 15" on centers with the first dowel located 12" from the barrier wall. Dowels may be placed within or adjacent to the keyway.

RIGHT SIDE SHOWN, LEFT SIDE OPPOSITE HAND

ONE-WAY AND TWO-WAY TRAFFIC (NEAR LANE APPROACH)

TRANSITION SEGMENT FOR 'CONCRETE BARRIER WALL (RIGID) (CURB & GUTTER)'

STATE OF FLORIDA DEPARTMENT OF TRANSPORTATION
ROAD DESIGN

CONCRETE BARRIER WALL

Names	Dates	Approved By
Designed by		State Design Engineer, Roadways
Drawn by HSO	10/85	
Checked by JBW/JVG	10/85	
F.H.W.A. Approved:		

Revision No	Sheet No	Index No.
86	7 of 8	410

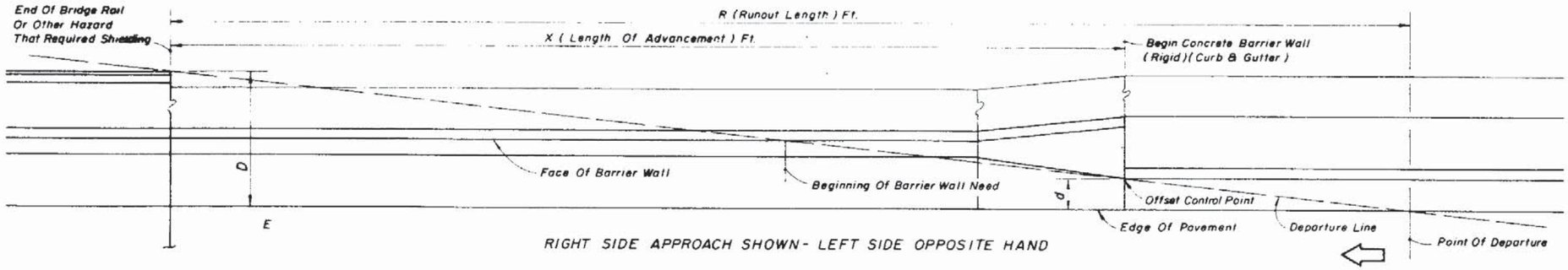

RIGHT SIDE APPROACH SHOWN - LEFT SIDE OPPOSITE HAND

NEAR LANE APPROACH

Design Speed (mph)	R (Runout Length) Ft.				
	Over 6000 V.P.D.	2000-6000 V.P.D.	800-2000 V.P.D.	250-800 V.P.D.	Under 250 V.P.D.
40-45	320	290	260	240	210
Less Than 40	240	220	200	180	160

$$X = R\left(\frac{D-d}{D}\right)$$

Where:

D = Distance in feet from near edge of the near approach travel lane to back of hazard or clear zone width whichever is lesser. For left side hazards and clear zones on two-way undivided facilities D is measured from the inside edge of the near approach travel lane.

d = Distance in feet from the near edge of the near approach travel lane to the face of curb (at offset control point). For left side hazards on two-way undivided facilities d is measured from the inside edge of the nearest opposing travel lane.

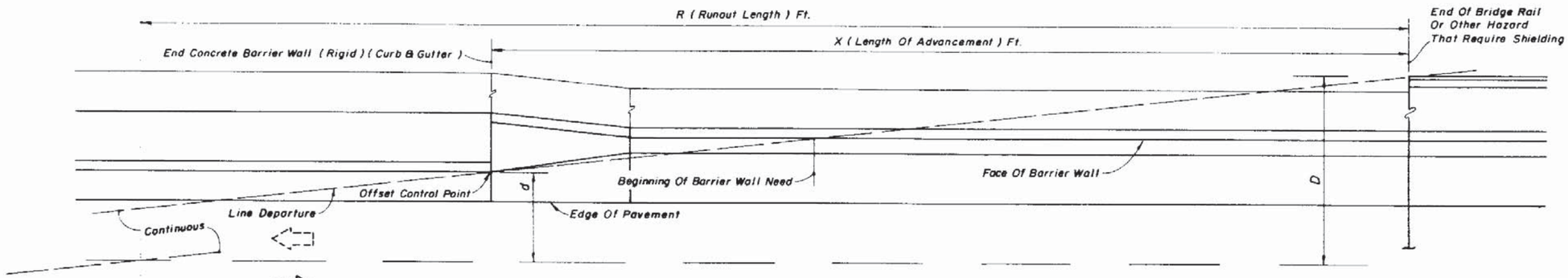

OPPOSING LANE APPROACH

WITH OR WITHOUT UTILITY STRIP - UTILITY STRIP SHOWN - SEE SHEET 4 & 5 FOR APPLICATIONS

LENGTH OF ADVANCEMENT FOR 'CONCRETE BARRIER WALL (RIGID)(CURB & GUTTER)'

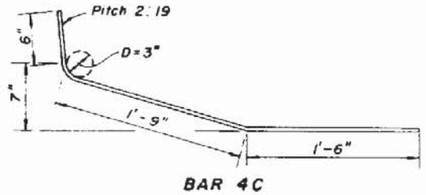

BAR 4C

BENDING DIAGRAM

Estimated Quantities Per Linear Foot Of Wall:
Class II Concrete: 0.23 CY
Reinforcing Steel: 17 Lbs.

Note: All longitudinal reinforcement No. 4 bars. Minimum segment length for this wall is 40 feet. Shorter segments due to construction or expansion joint construction shall be doweled in the manner described for 'Transition Segments' on Sheet 7 of 8. Wall to be paid for under the contract unit for Concrete Barrier Wall (Rigid) (Curb & Gutter), LF.

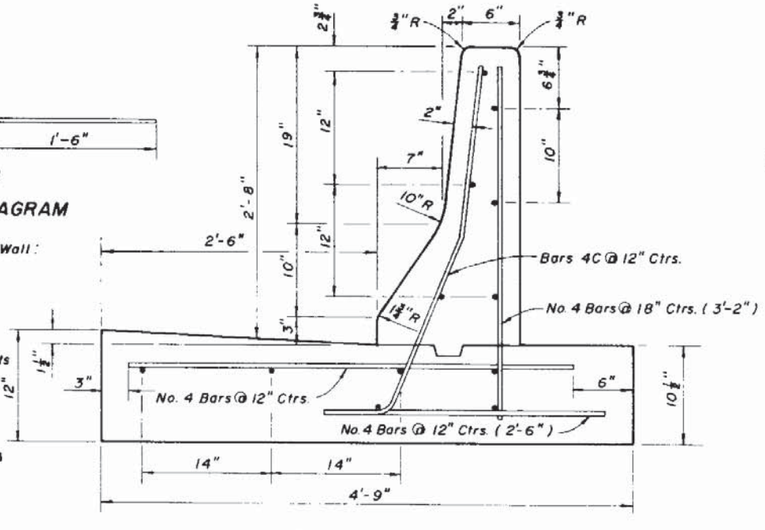

SECTION QQ

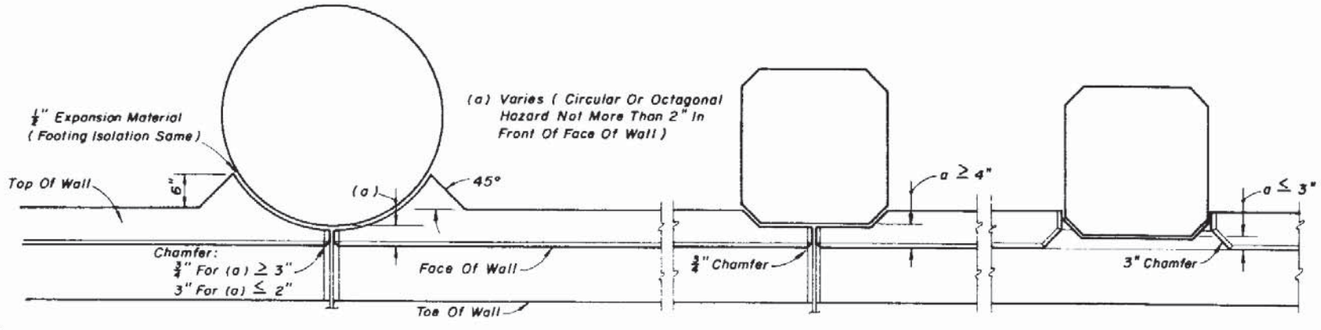

TOP VIEWS

HAZARD PENETRATING STEM OF BARRIER WALL

STATE OF FLORIDA DEPARTMENT OF TRANSPORTATION
ROAD DESIGN

CONCRETE BARRIER WALL

	Names	Dates
Designed by		
Drawn by	HSD	10/85
Checked by	JBW/JVG	10/85
F.H.W.A. Approved:		

Approved By: _____
State Design Engineer, Roadways

Revision No.	Sheet No.	Index No.
86	8 of 8	410

OFFSET

"d"	Conditions
6'	Municipal Construction - Low Speed - ADT > 1600
6'	Undivided Highway - Low Speed - ADT < 1600
6'	Undivided Highway - High Speed - ADT < 1600
10'	Undivided Highway - High Speed - ADT > 1600
10'	Divided Highway of Four or More Lanes
10'	Interstate and Other Limited Access Facilities

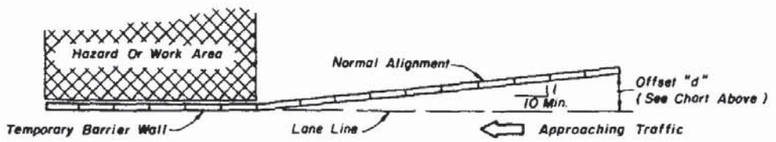

PLAN

Notes:
1. For optional wall alignment see attenuator detail above.
2. Temporary barrier to be placed as shown in plans or as directed by the Engineer.
3. For additional information refer to charts I, II and III of the F.D.O.T. Manual On Traffic Control And Safe Practices.

WALL ALIGNMENT

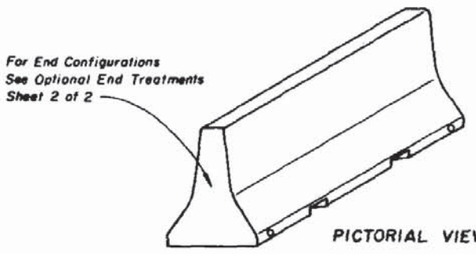

PICTORIAL VIEW

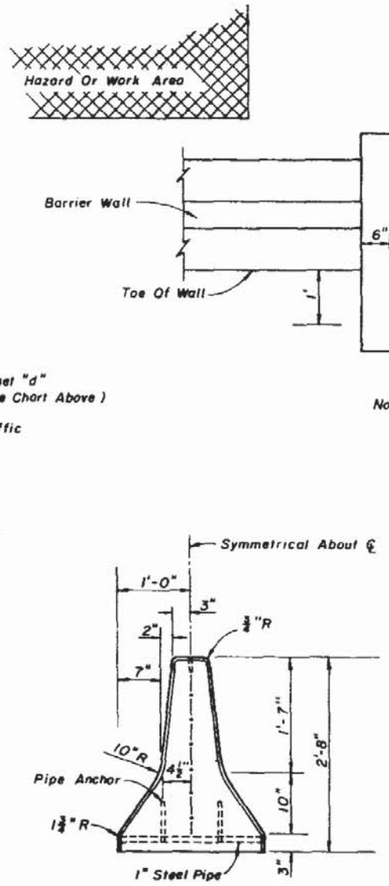

SECTION

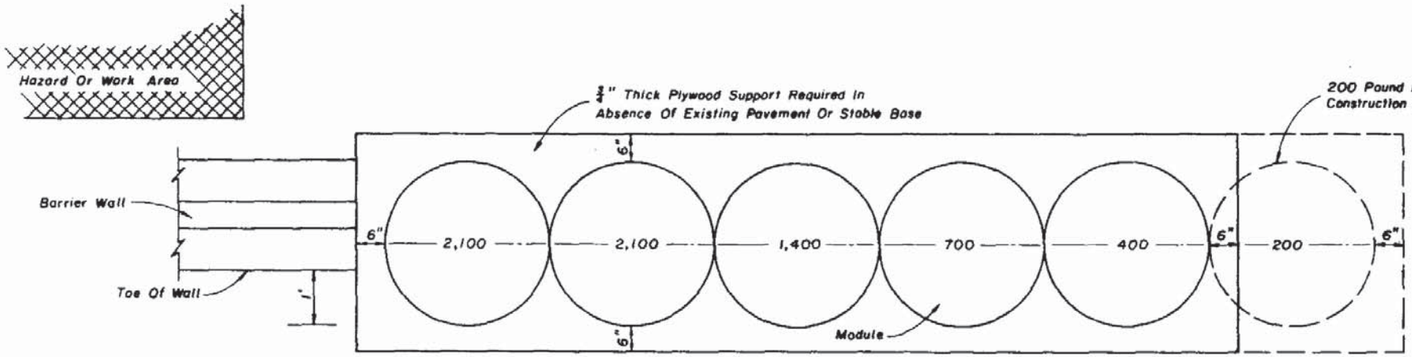

PLAN

Notes:
1. Inertial attenuator to be installed where taper offset for normal alignment is not obtainable.
2. Number shown inside module indicates the weight in pounds of sand. All modules are approximately 36" inches in height and in diameter.
3. Inertial attenuator to be installed in accordance with manufacturers specifications and recommendations.
4. Delineator panels shall be placed on the approach end module in accordance with Index No. 17353.
5. Inertial attenuators shall be paid for as Vehicular Impact Attenuator (Inertia) (Temp) Ea. Relocation of attenuators shall be paid for as Relocate Temporary Vehicular Impact Attenuator Ea.

TEMPORARY INERTIAL ATTENUATOR

Vehicle Deceleration Data			
Construction Zone Speed (mph)	Design Vehicle Weight (lbs)	Forces (g's)	
		Maximum Deceleration	Average Deceleration
45 or Less	2000	7.06	4.47
	4500	5.96	4.15
Greater Than 45	2000	8.72	5.77
	4500	8.15	5.20

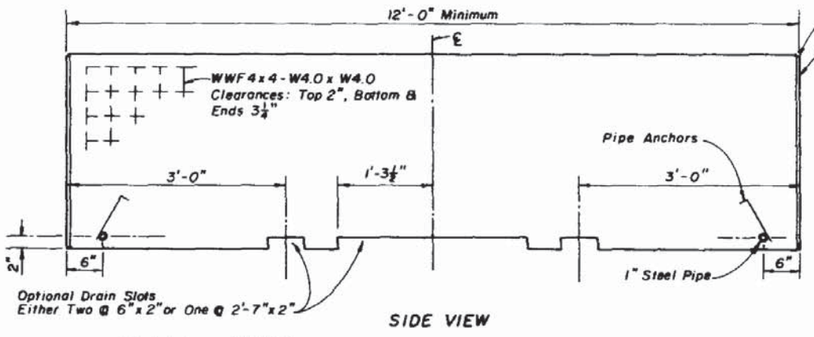

SIDE VIEW

WALL UNIT

½" Chamfer Top & Sides Both Ends

For End Configurations See Optional End Treatments Sheet 2 of 2

GENERAL NOTES

1. Material and workmanship for the wall unit shall meet the requirements of Sections 400 and 521 of the Standard Specifications, except the bottom of the unit can be finished to a dense uniform surface by floating in lieu of the Class 3 finish. Concrete shall be Class II.
2. The wall units shall be used for Class E barricades and temporary barrier walls unless the plans specify other types of barrier walls.
3. Wall units shall not be used for permanent barrier wall construction regardless of unit length, unless specifically permitted by the plans.
4. Units with any of the optional end treatments may be used for Class E barricade and temporary barrier wall installations, subject to the following requirements:
   (a) The plans may specify the option.
   (b) Option 1 and Option 2 units may not be mixed with each other or with Option 3 or Option 4.
   (c) Option 3 and Option 4 units are interchangable and may be mixed in a single run of wall, however, they may not be mixed with Option 1 or Option 2.
   (d) Option 1 units cast prior to August 1, 1982 shall be installed in accordance with Option 1 annotations.
5. Units may be reused provided they have the structural integrity and surface qualities of new units.
6. Units shall be furnished by the Contractor except when the plans stipulate the availability of Department owned units. Regardless of unit source the Contractor shall furnished all hardware and shall be responsible for all handling including loading, transport, unloading, stockpiling, installation, removal and return. Department owned units shall have plain ends and wall tie anchor pipes. Units with plain ends from sources other than the Department will not be permitted regardless of end ties or anchorage.
7. Units used for Class E barricades and other temporary applications shall be paid for as Conc Barrier (Temp - Type E) LF.

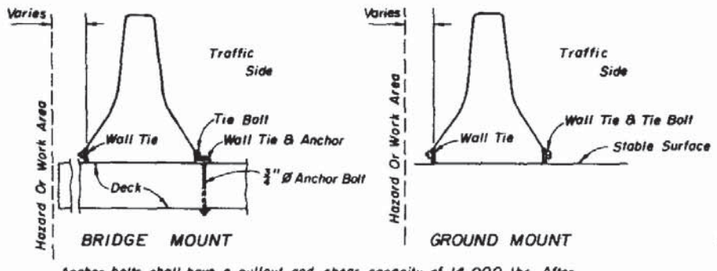

BRIDGE MOUNT GROUND MOUNT

Anchor bolts shall have a pullout and shear capacity of 14,000 lbs. After construction is complete anchors shall be removed to 1" min. below slab surface and hole filled with grout. Wedge anchor bolts may be used in lieu of bolt, washer and nut assembly shown.

WALL TIES & ANCHORAGE

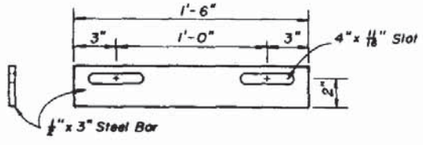

WALL TIE

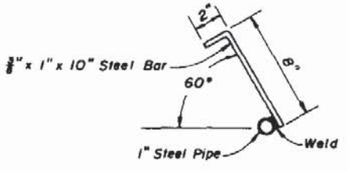

WALL TIE & ANCHOR PIPE

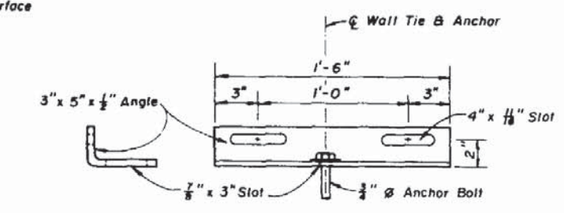

WALL TIE & ANCHOR

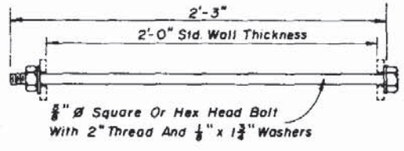

WALL TIE BOLT

STATE OF FLORIDA DEPARTMENT OF TRANSPORTATION
ROAD DESIGN

PRECAST CONCRETE TEMPORARY BARRIER WALL

	Names	Dates
Designed by		
Drawn by	HSD	4/82
Checked by	JVG	4/82
F.H.W.A. Approved: 4/28/82		

Approved By
State Design Engineer, Roadways

Revision No.	Sheet No.	Index No.
83	1 of 2	415

OPTION 1 ANNOTATIONS

1. Tolerances: Tongue 0" to (-)$\frac{1}{4}$", Groove 0" to (+)$\frac{1}{4}$"
2. Barrier unit without anchor pipes, with toe heights of not less than 3" nor more than 4" and with or without bottom keyways, produced prior to August 1, 1982 and used on projects let to contract after August 1, 1982 may be used under the following adaptations:
   (a) Ground Mounted Units: Units shall be tied front and back with wall ties mounted 4" above the top of the toe by anchors located 6" from the end of the unit. Anchor bolts shall be $\frac{5}{8}$" diameter providing a minimum pull-out strength of 9000 lbs. and may be either threaded insert, wedge or epoxy grouted sleeve types with 4$\frac{1}{2}$" minimum imbedment.
   (b) Bridge Mounted Units: Units shall be tied front and back same as ground mounted units. In addition, an "L" clip shall be welded on center to the bottom edge of the front wall tie to provide deck anchorage using the $\frac{3}{4}$" diameter anchor bolt. The clip shall have a $\frac{1}{4}$" x 2" minimum cross section and may be fabricated by either method shown in the sketches below. Units with varying toe heights will not be permitted in any single run of wall.

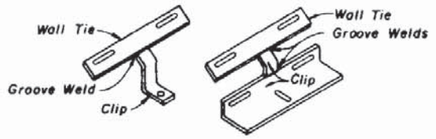

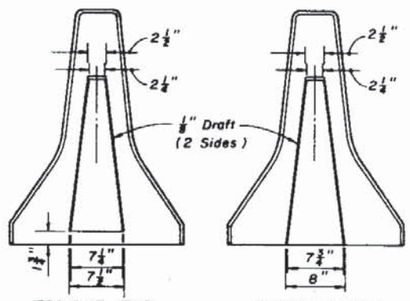

TONGUE END GROOVE END

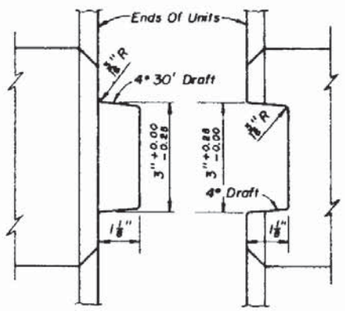

TOP VIEW

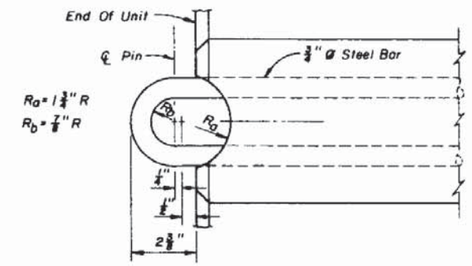

TOP VIEW

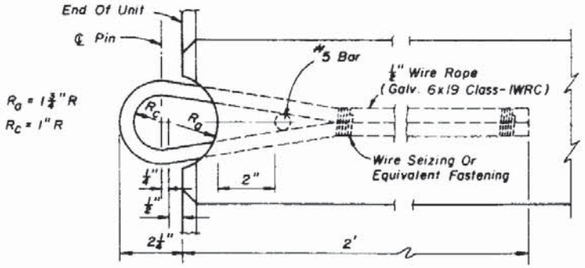

TOP VIEW

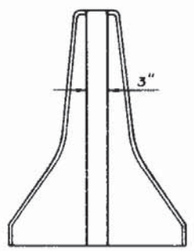

END VIEW

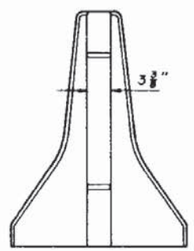

END VIEW

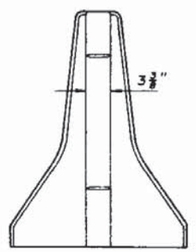

END VIEW

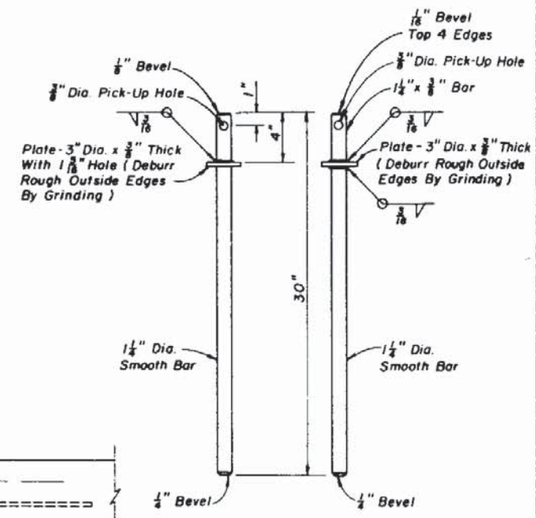

OPTIONAL PINS

STEEL CONNECTING PIN FOR OPTIONS 3 AND 4

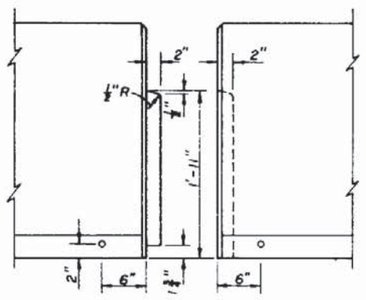

SIDE VIEW

TRAPEZOIDAL TONGUE AND GROOVE
OPTION 1

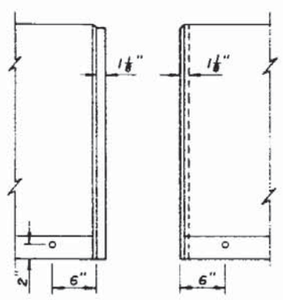

SIDE VIEW

STRAIGHT TONGUE AND GROOVE
OPTION 2

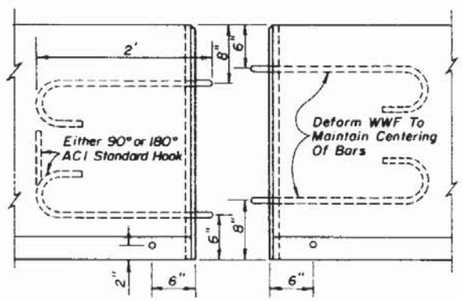

SIDE VIEW

ROUND BAR CONNECTOR
OPTION 3

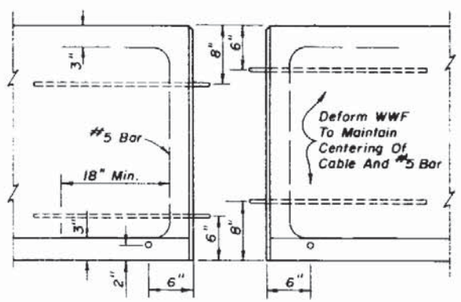

SIDE VIEW

WIRE ROPE CONNECTOR
OPTION 4

OPTIONAL END TREATMENTS FOR WALL UNITS

WALL TIE AND ANCHORAGE REQUIREMENTS

END OPTION	GROUND MOUNT	BRIDGE MOUNT
1	Yes	Yes
2	Yes	Yes
3	No	Yes
4	No	Yes

Note: When the plans call for wall units furnished by the Department, ground and bridge mounts will be required. Tie and anchor assemblies shall be furnished by the Contractor.

STATE OF FLORIDA DEPARTMENT OF TRANSPORTATION
ROAD DESIGN

PRECAST CONCRETE TEMPORARY BARRIER WALL

	Names	Dates
Designed by		
Drawn by	HSD	4/82
Checked by	JVG	4/82
F.H.W.A. Approved 4/28/82		

Approved By
State Design Engineer, Roadways

Revision No.	Sheet No.	Index No.
83	2of2	415

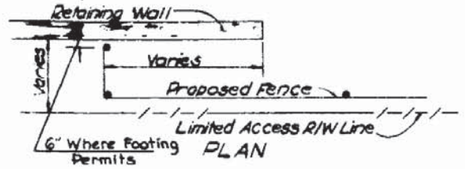

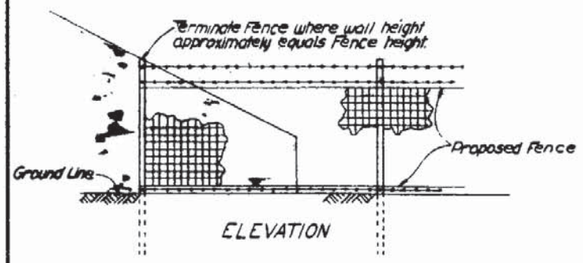

FENCING TERMINALS AT RETAINING WALLS

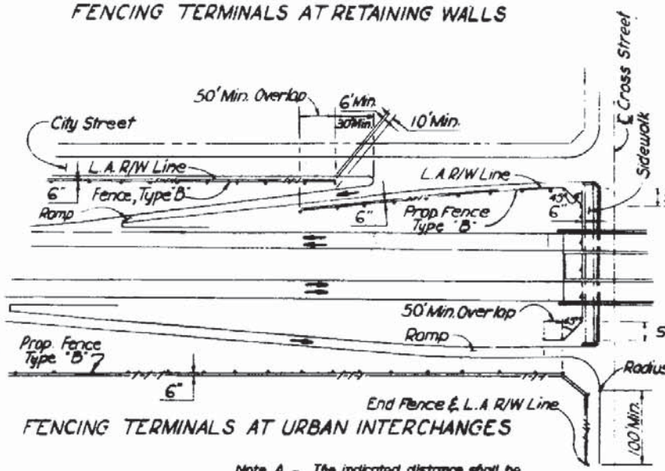

FENCING TERMINALS AT URBAN INTERCHANGES

Note A - The indicated distance shall be sufficient to provide satisfactory sight distance for the traffic from the ramp.

Note B - The indicated distance shall be identical to the above noted dimension, if practical.

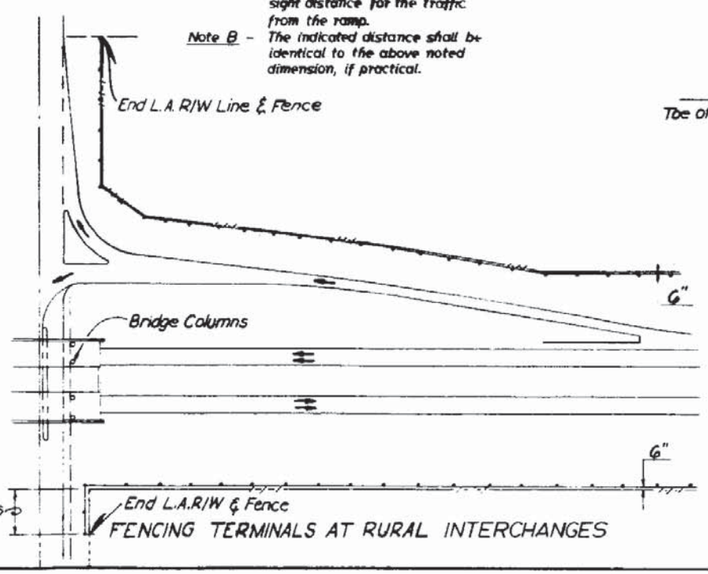

FENCING TERMINALS AT RURAL INTERCHANGES

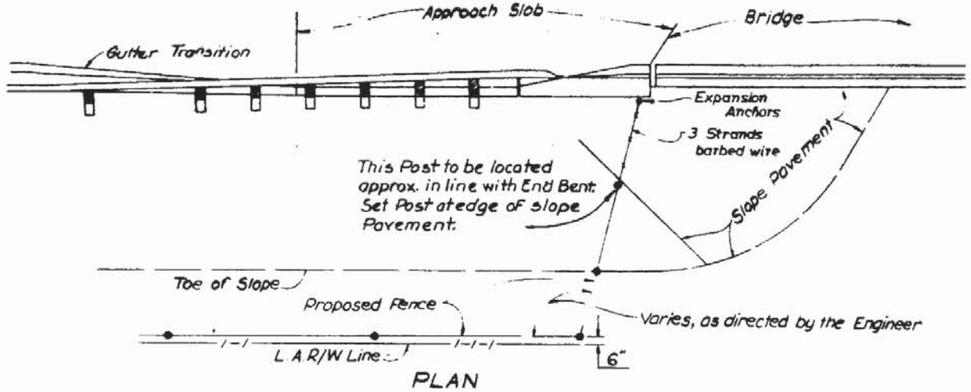

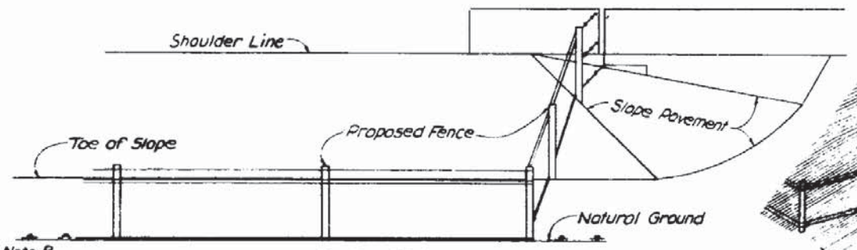

ELEVATION
FENCING TERMINALS AT BRIDGE ENDS
(ROADWAY)

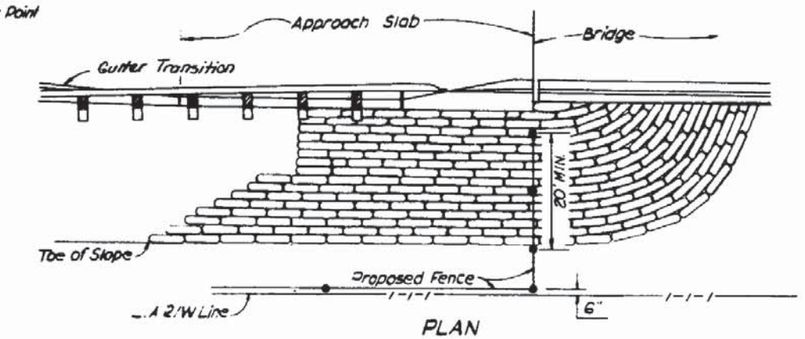

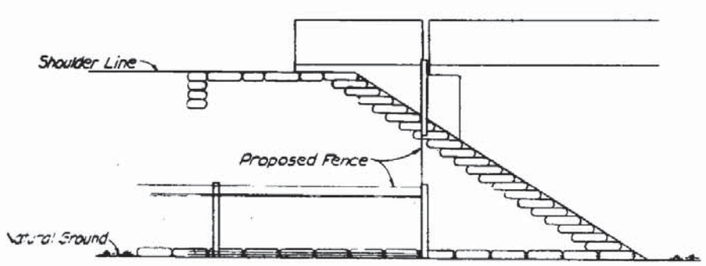

ELEVATION
FENCING TERMINALS AT BRIDGE ENDS
(STREAM CROSSING)

Note:
1. Angle of fence to be measured from a line parallel to the ℄ of Structure.
2. This Fence location to be used at Cross Drains with excavated outfall Ditches or as shown in plans.

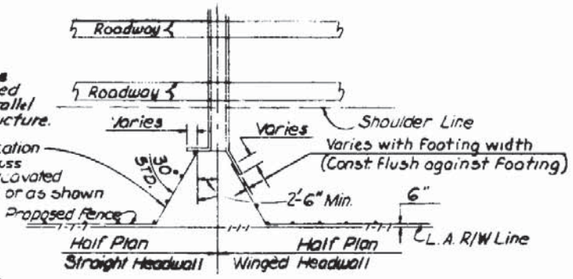

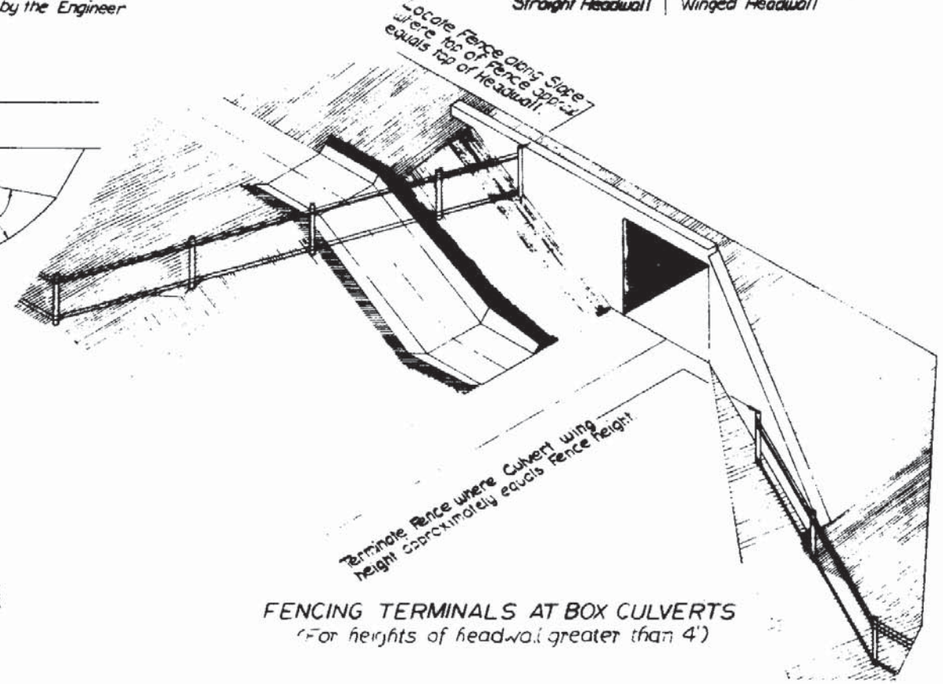

FENCING TERMINALS AT BOX CULVERTS
(For heights of headwall greater than 4')

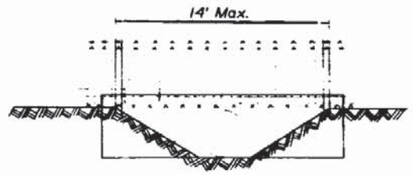

FENCING DETAIL AT CULVERT
(For heights of headwalls 4' or less.)

Note: When height of headwall is 4' or less (pipe culverts 36" or less) the fence shall not be tied to the headwall, but shall span the lateral ditch.

STATE OF FLORIDA DEPARTMENT OF TRANSPORTATION
ROAD DESIGN

FENCE LOCATION

	Names	Dates
Designed by	H F W	2/65
Drawn by	H F W	2/65
Checked by	R L O	2/65
F. H. W. A. Approved:		6/18/74

Approved By
Deputy Design Engineer, Roadways

Revision No.	Sheet No.	Index No.
80	1 of 1	450

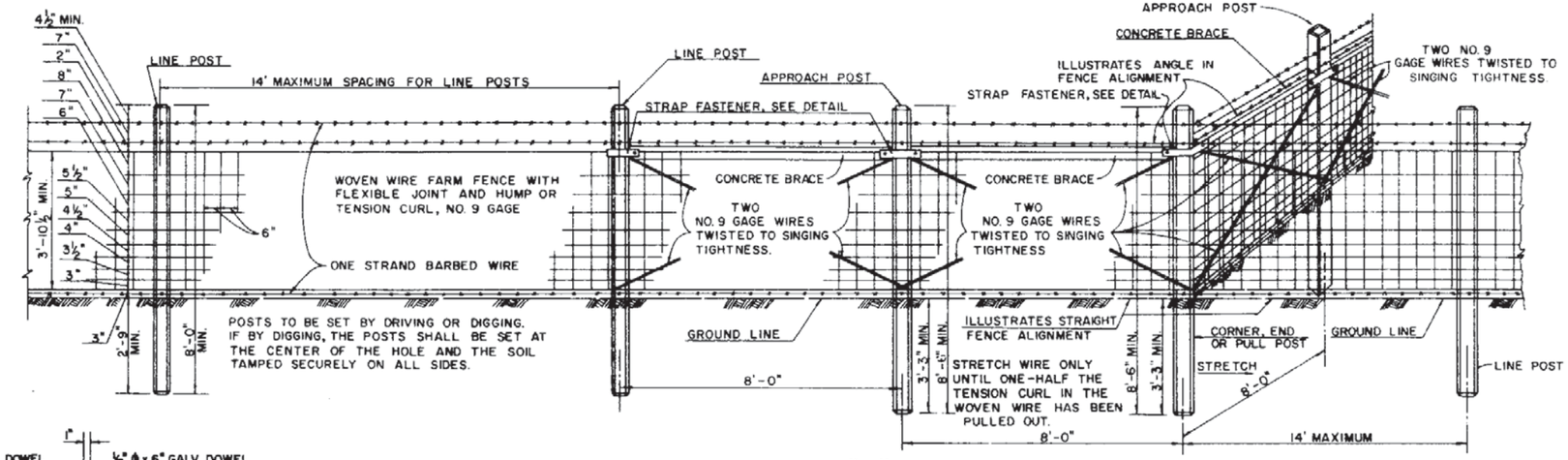

DETAILS OF TYPE "A" FENCE

(ILLUSTRATED FOR CONC. POSTS AND BRACES)

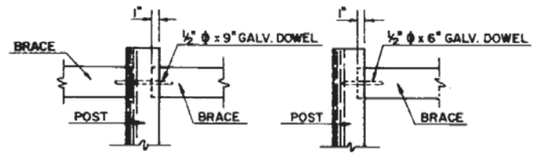

FASTENER FOR TIMBER POST AND BRACE

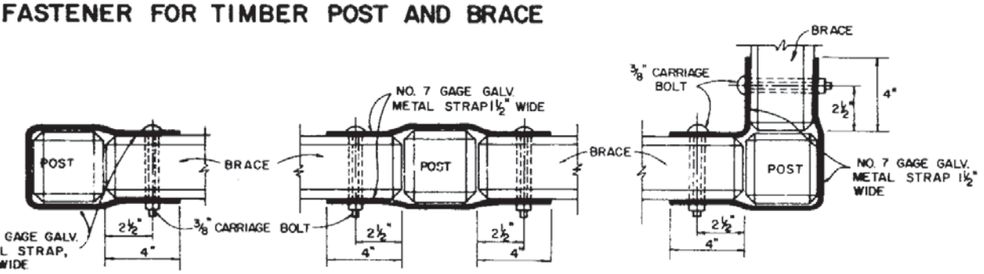

BRACE AND POST — BRACE TO BRACE ON LINE — BRACE TO BRACE AT CORNER

FASTENER FOR CONCRETE POSTS AND BRACES

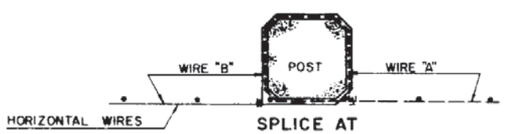

SPLICE AT CORNER OR PULL POSTS

EACH HORIZONTAL WIRE TO BE WRAPPED COMPLETELY AROUND PULL POST AND TIED TO SAME WIRE. CONC. POST ILLUSTRATED. THIS METHOD ALSO APPLIES TO STEEL POST INSTALLATIONS AND TIMBER POST INSTALLATIONS.

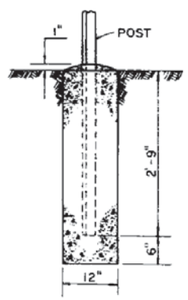

CONCRETE BASE FOR ANGULAR STEEL POST

(PULL, CORNER, END AND APPROACH POSTS)

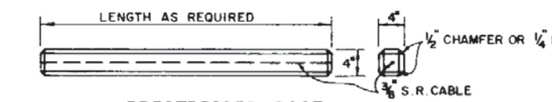

PRESTRESSED POST

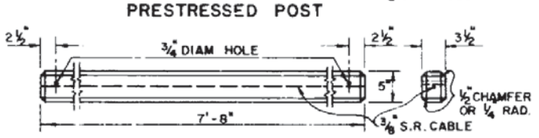

PRESTRESSED BRACE

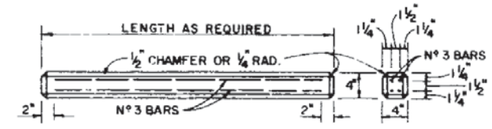

PRECAST POST

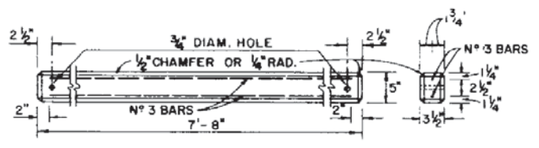

PRECAST BRACE

ALTERNATE CONCRETE POSTS AND BRACES

GENERAL NOTES (Continued)

Unless otherwise called for in the plans gates shall be commercially available metal swing gates assembled and installed in accordance with the manufactures specifications as approved by the Engineer. Chain link swing gates in accordance with Index No. 452 may be substituted for metal swing gates as approved by the Engineer. Payment for gates shall include the gate, single or double, all necessary hardware for installation and any additional length and/or size for posts at the opening. Gates shall be paid for under the contract unit price for Fence Gates, Type A, each.

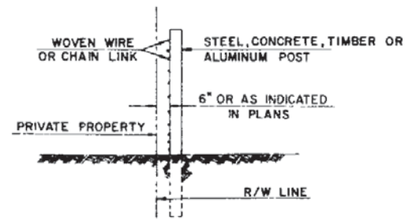

SKETCH INDICATING FENCE LOCATION AT SECTIONS OF NO FRONTAGE ROADS. REFER TO DETAIL PLANS FOR LOCATIONS OF FENCING FOR PROJECTS WITH FRONTAGE ROADS.

GENERAL NOTES

1. *This fence to be provided generally in rural areas.*
2. *Posts and braces may be either steel, aluminum, timber or concrete.*
3. *Steel posts and braces shall be standard steel posts, galvanized at the rate of 2 oz. per sq. ft., together with necessary hardware and wire clamps and meetings the following requirements:*
   - *(A) Line posts: 8' long; 1.33 lbs. per lin. ft.; studded, anchor plate attached; with necessary clamps, etc.*
   - *(B) Approach posts: 2½" x 2½" x ¼" angles, 8' long; fabricated for attaching brace; with necessary hardware, clamps, etc.*
   - *(C) Pull, end and corner posts: 2½" x 2½" x ¼" angles, 8' long; fabricated for attaching brace; with necessary hardware, clamp, etc.*
   - *(D) Braces: 2" x 2" x ¼" angles with necessary hardware and fabricated for attaching to post.*
   - *(E) The pull, corner, approach and end posts are to be set in concrete as per detail. (Also see Note No. 6.)*
4. *All timber posts, except corner and pull posts are to be minimum 4" diameter. Timber corner and pull posts are to be minimum 5" diameter. Braces are to be 4" minimum diameter. Lengths of timber posts to be as indicated above for concrete posts.*
   - *(A) Staples for line posts to be 1½" minimum length; for approach, corner and pull posts 1¾" minimum length. At approach, corner and pull posts, staple every line wire. At line posts, staple every line wire in top half and alternate line wires in bottom half.*
   - *(B) Adequate connections between timber posts and braces to be provided.*
   - *(C) Wire to be wrapped around end posts and corner posts (installed as line posts) at vertical breaks of 15° or more.*
5. *Longer posts than those indicated above may be required by the plans or for deeper installations.*
6. *Concrete for bases shall be class I as specified in section 345 except that the requirements contained in 345-5.1, 345-10 and 345-11 shall not apply. Materials for Class I concrete may be proportioned by volume and/or by weight.*
7. *The contractor, at his option, may use any suitable precast or prestressed concrete post; however, approval by the Engineer, of posts not shown on this drawing, will be required prior to construction of the fence.*
8. *Fence shall be installed with wire side to private property except on horizontal curves greater than 3° the fence shall be installed so as to pull against all posts.*
9. *For pay purposes assemblies are defined as follows: Pull or end post assemblies shall consist of: One end or pull post, one approach post, two braces and all necessary fittings and hardware as detailed above. Corner post assemblies shall consist of: One corner post, two approach posts, four braces and all necessary fittings and hardware as detailed above.*
10. *The type of fence to be installed shall be shown on plans. Pull posts shall be installed at approximately 330' centers except that this maximum interval may be reduced by the Engineer on curves where the degree of curvature is greater that 3 degrees.*
11. *Corner posts are to be installed at all horizontal and vertical breaks in fence of 15° or more.*
12. *A maximum length of 1320' of wire may be installed as a unit.*

(continued)

STATE OF FLORIDA DEPARTMENT OF TRANSPORTATION
ROAD DESIGN

FENCE TYPE A

	Names	Date
Designed by		
Drawn by		
Checked by		

Approved By: Deputy Design Engineer, Roadways

F.H.W.A. Approved: 9/3/76

Revision No.	Sheet No.	Index No.
86	1 of 1	451

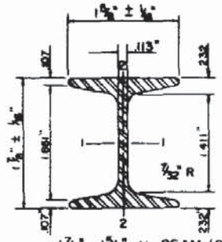

1⅞" x 1⅝" H-BEAM (STEEL) (ALUM)

AREA = .724" 0.91 ■ ±5%

GALV. WT. PER. FT. = 2.72 ■ ± 5%

	AXES 1-1	AXES 2-2	1-1	2-2
MOMENT OF INERTIA	428	101	428	101
SECTION MODULUS	456	124	456	124
RAD. OF GYRATION	779	.373	779	.373
SURFACE AREA = .776" PER FT.			.776"	PER FT.
TENSILE STRENGTH PSI. (MIN.)	60,000		30,000	
YIELDING POINT PSI. (MIN.)	46,000		25,000	

OPTIONAL H-BEAM LINE POST FOR TYPE B FENCE

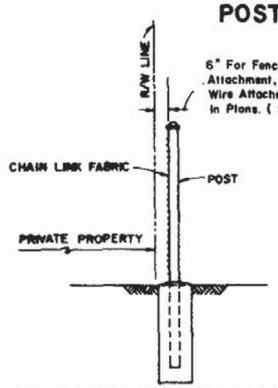

FENCE POSITION AT LOCATIONS WITHOUT FRONTAGE ROADS

(REFER TO DETAIL PLANS FOR FENCE POSITION AT LOCATIONS WITH FRONTAGE ROADS)

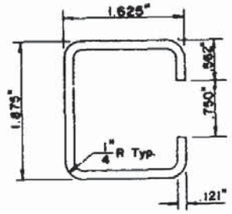

Galv. Wt. Per. Ft. = 2.34 ■ ± 5%

Yield Point p.s.i. (Min.) 45,000

OPTIONAL "C" LINE POST FOR TYPE B FENCE

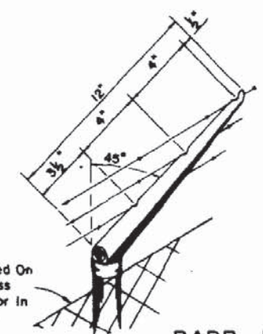

NOTES

Attachments to be used only when called for in the plans.

Attachments to extend in direction of restraint. Unless otherwise called for in plans, direction of restraint will be as follows:

(a.) Outward on limited access right of way line.
(b.) Outward on controlled access right of way line.
(c.) Outward from utilities and hazardous facilities located within highway right of way.
(d.) Outward from lateral ditches, outfalls, retentions basins, canals, borrow areas and similar support facilities.
(e.) Inward on pedestrian ways.

Attachments to be paid for under the contract unit price for Fencing, Type B (With Barb Wire Attachment) LF.

BARB WIRE ATTACHMENT

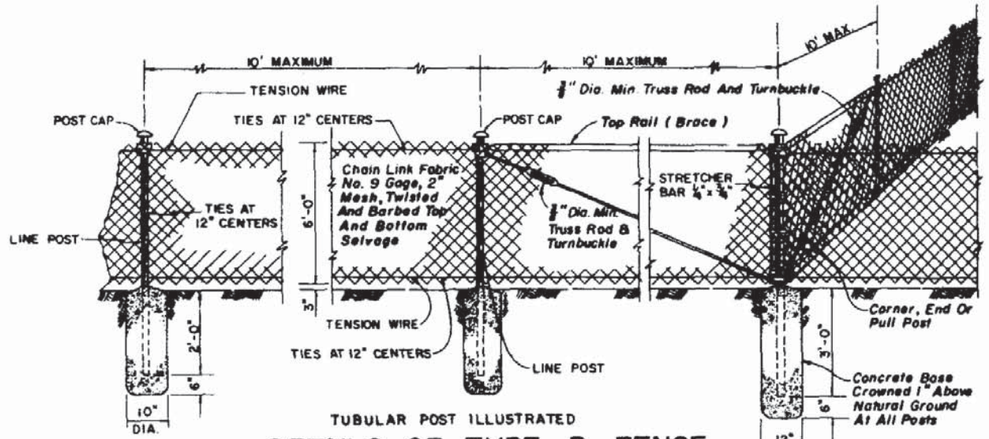

TUBULAR POST ILLUSTRATED

DETAILS OF TYPE B FENCE

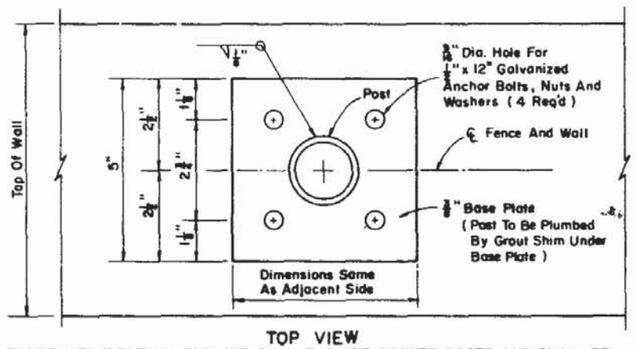

TOP VIEW

BASE PLATE IDENTICAL FOR LINE, PULL, END AND CORNER POSTS AND SHALL BE CONSIDERED AN INTERGAL PART OF THE RESPECTIVE POSTS FOR BASIS OF PAYMENT

FENCE MOUNTING ON CONCRETE ENDWALL AND RETAINING WALLS

GENERAL NOTES (CONT.)

10. Unless sliding gates or special gates are called for in the plans all gates shall be chain link swing gates meeting the material requirements described above as approved by the Engineer. Payment shall include the gates, single or double, all necessary hardware for installation and any additional length and/or size for posts at the opening. Gates shall be paid for under the contract unit price for Fence Gates, Type B, each.

11. Line posts, tension wires, chain link fabric, tie wires, all miscellaneous fittings and hardware, and Class I concrete to be paid for under the contract unit price for Fencing Type B, LF.

Pull or end post assemblies shall consist of one pull or end post, one brace, one truss rod and all necessary fittings and hardware as detailed above and shall be paid for under the contract unit price for Pull & End Post Assembly (Type B Fence), Each.

Corner post assemblies shall consist of one corner post, two braces, two truss rods, and all necessary fittings and hardware as detailed above and shall be paid for under the contract unit price for Corner Post Assembly (Type B Fence), Each.

TYPE IV VINYL COATED FABRIC						
Spec. Subarticle 966-1.1 And AASHTO M181-851 With Table 4 Redefined As Follows:						
Specified Dia. of Metallic Coated Core Wire			Minimum Weight of Zinc or Aluminum Coating		Thickness Range of Extruded or Extruded and Bonded PVC Coating	Thickness Range of Bonded PVC Coating
in.	mm.	gage	oz/ft.²	g/m²	in. mm.	in. mm.
0.148	3.76	9	0.30	92	0.015 to 0.025 / 0.38 to 0.64	0.006 to 0.010 / 0.15 to 0.25

GENERAL NOTES

1. This fence to be used generally in urban areas.
2. This fence shall be in accordance with Section 550 of F.D.O.T. Standard Specifications.
3. Chain link fabric, posts, rails, truss rods, tension wires, tie wires, stretcher bars, gates and all miscellaneous fittings and hardware shall meet the requirements of AASHTO M 181, and as specified below. Stipulated AASHTO and ASTM signify current reference.
4. Fence Component Options:
   - A. Line post options:
     - (1) Galvanized steel pipe, Schedule 40 - 1½" nominal dia. galvanized at the rate of 1.8 oz. per sq. ft.: ASTM A53 Table X2, ASTM A120, and AASHTO M 111.
     - (2) Aluminum coated steel pipe - 1½" nominal dia. coated at the rate of 0.40 oz. per sq. ft.: Spec. Subarticle 966-1.5.
     - (3) Aluminum alloy pipe - 2" nominal dia.: ASTM B 241 or B 221, Alloy 6063, T6.
     - (4) Steel H-Beam - 1⅞" x 1⅝": Galv. 1.8 oz./s.f.: AASTO M 111 and Detail.
     - (5) Aluminum alloy H-Beam - 1⅞" x 1⅝": Detail.
     - (6) Steel C - 1⅞" x 1⅝": Galv. 1.8 oz./s.f.: AASTO M 111 and Detail.
     - (7) Resistance welded steel pipe - 1½" nominal dia. Spec. Subarticle 966-1.5.
   - B. Corner, end, and pull post options:
     - (1) Galvanized steel pipe, Schedule 40 - 2" nominal dia. galvanized at the rate of 1.8 oz. per sq. ft.: ASTM A53 Table X2, ASTM A120, and AASHTO M 111.
     - (2) Aluminum coated steel pipe - 2" nominal dia. coated at the rate of 0.40 oz. per sq. ft.: Spec. Subarticle 966-1.5.
     - (3) Aluminum alloy pipe - 2½" nominal dia.: ASTM B 241 or B 221, Alloy 6063, T6.
     - (4) Resistance welded steel pipe - 2" nominal dia.: Spec. Subarticle 966-1.5.
   - C. Rail options:
     - (1) Galvanized steel pipe, Schedule 40 - 1½" nominal dia. galvanized at the rate of 1.8 oz. per sq. ft.: ASTM A53 Table X2, ASTM A120, and AASHTO M 111.
     - (2) Aluminum coated steel pipe - 1½" normal dia. coated at the rate of 0.40 oz. per sq. ft.: Spec. Subarticle 966-1.5.
     - (3) Aluminum alloy pipe - 1½" nominal dia.: ASTM B 241 or B 221, Alloy 6063, T6.
     - (4) Resistance welded steel pipe - 1½" nominal dia. Spec. Subarticle 966-1.5.
   - D. Chain link fabric options:
     - (1) No. 9 gage steel wire (2" mesh) galvanized at the rate of 1.8 oz. per sq. ft.: AASHTO M 181.
     - (2) Type IV Vinyl Coated Fabric: See Table Below.
     - (3) Aluminum coated steel wire: AASHTO M 181.
   - E. Tension wire options:
     - (1) No. 7 gage steel wire galvanized at the rate of 1.8 oz. per sq. ft.: AASHTO M 181.
     - (2) Aluminum alloy wire conforming to the requirements of ASTM B 211, Alloy 6061, Temper T89 or T94, with a wire diameter of 0.1875" or larger.
     - (3) No. 7 gage aluminum coated steel wire coated at the rate of 0.40 oz. per sq. ft.: AASHTO M 181.
   - F. Tie wire and hog ring options:
     - (1) No. 9 gage steel wire galvanized at the rate of 1.8 oz. per sq. ft..
     - (2) Aluminum alloy wire conforming to the requirements of ASTM B 211, Alloy 6061, Temper T89 or T94, with a wire diameter of 0.1443" or larger.
     - (3) No. 7 gage aluminum coated steel wire coated at the rate of 0.40 oz. per sq. ft.
5. Unless a special material is called for in the plans, the contractor may elect to use a combination of zinc coated steel, aluminum coated steel, vinyl coated steel, and aluminum alloy fence members; but in general, only one combination of materials will be allowed throughout a continuous run of fence.
6. Concrete for bases shall be Class I as specified in Section 345 of the Standard Specifications except that the requirements contained in 345-5.1, 345-10 and 345-11 shall not apply. Materials for Class I concrete may be proportioned by volume and/or by weight.
7. In locations of firm well drained soils that are suitable for full stable embedment, the contractor may elect to install any of the optional steel line posts by driving to a minimum depth of 3 feet in lieu of using concrete footings. Driving will not be permitted for line posts located in sandy soils, nor permitted for line posts used in conjunction with pull, end or corner posts. Posts shall be protected to prevent damage from driving. Damaged posts shall be repaired or removed and replaced as directed by the Engineer without additional cost to the Department.
8. Pull posts shall be used at breaks in vertical grades of 15° or more, or at approximately 330' centers except that this maximum interval may be reduced by the Engineer on curves where the degree of curvature is greater than 3°.
9. Corner posts are to be installed at all horizontal breaks in fence of 15° or more and as required at vertical breaks over 15° as determined by the Engineer.

continued

STATE OF FLORIDA DEPARTMENT OF TRANSPORTATION
ROAD DESIGN

FENCE TYPE B

	Names	Dates
Designed by		
Drawn by		
Checked by		

Approved By
State Design Engineer, Roadways

Revision No.	Sheet No.	Index No.
86	1 of 1	452

F.H.W.A. Approved: 10/6/83

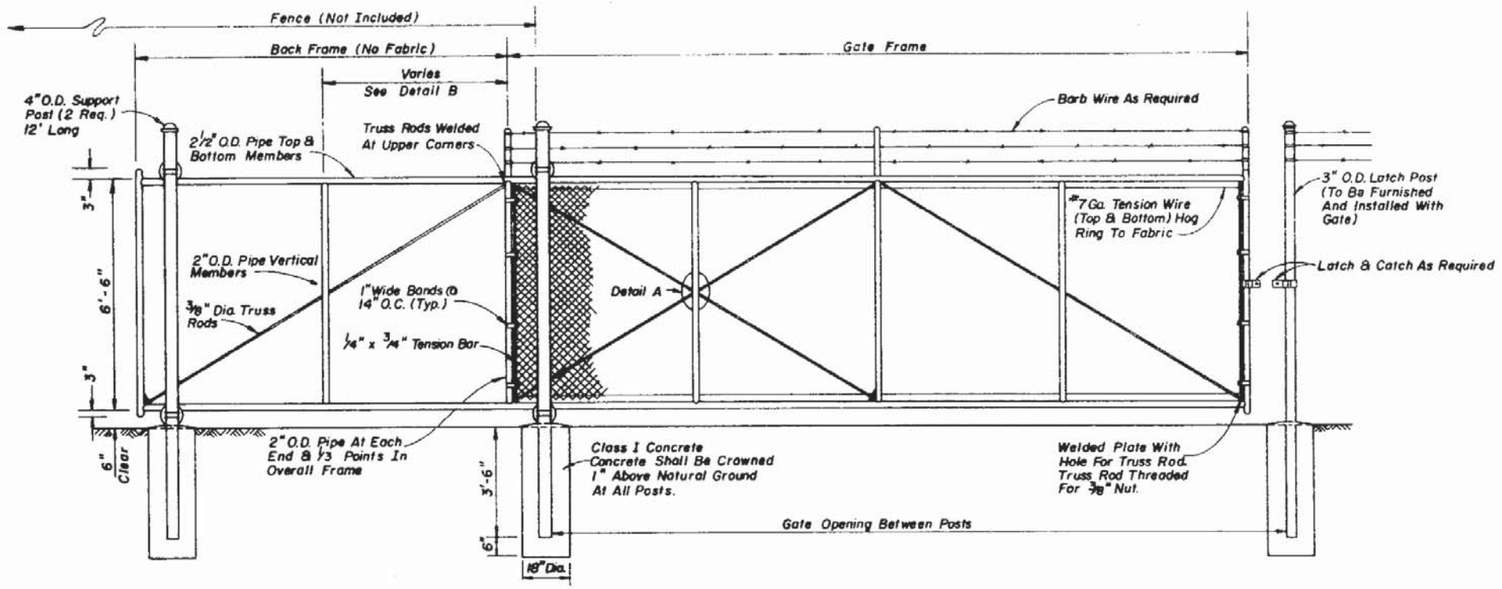

FRONT ELEVATION

GENERAL NOTES

1. Gate components shall meet the material requirement specified on Index No. 452.
2. Steel gate frame shall be fabricated prior to galvanizing, except that truss rods and truss rod plates may be fabricated following frame galvanizing provided surfaces damaged during welding are galvanized in accordance with Section 24 of AASHTO M36.
3. All fabric shall be knuckled top & bottom selvages.
4. Cost of all gate components shall be included in the contract unit price for Sliding Fence Gate (Cantilever), Each.
5. The Contractor may substitute any equivalent cantilever slide gate approved by the Engineer.

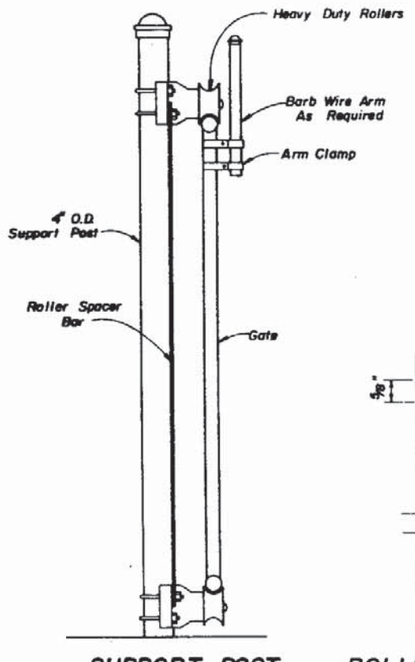

SUPPORT POST DETAIL

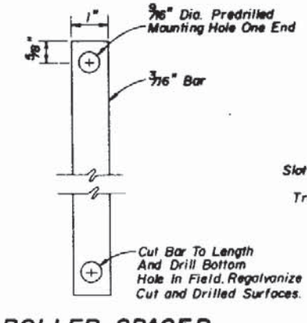

ROLLER SPACER BAR

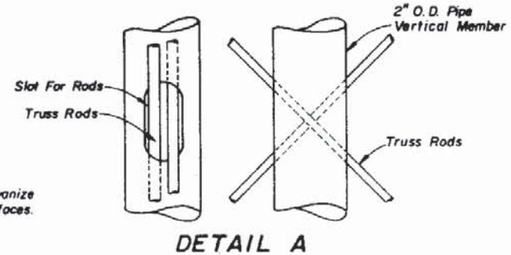

DETAIL A

GATE OPENING	GATE FRAME	BACK FRAME
12'	12'-3"	6'
16'	16'-3"	8'
20'	20'-3"	10'
24'	24'-3"	12'

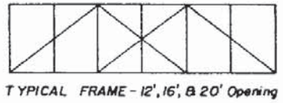

TYPICAL FRAME - 12', 16', & 20' Opening

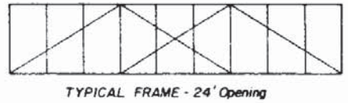

TYPICAL FRAME - 24' Opening

DETAIL B

STATE OF FLORIDA DEPARTMENT OF TRANSPORTATION
ROAD DESIGN

CANTILEVER SLIDE GATE TYPE B FENCE

	Names	Dates
Designed by		
Drawn by	HDD	9/78
Checked by	LMF	9/78
F.H.W.A. Approved: 10/26/78		

Approved By: Deputy Design Engineer, Roadways

Revision No.	Sheet No.	Index No.
82	1 of 1	453

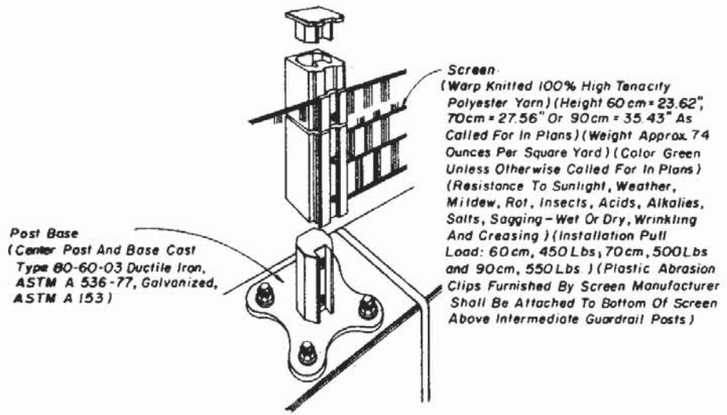

CONCRETE BARRIER WALL MOUNT

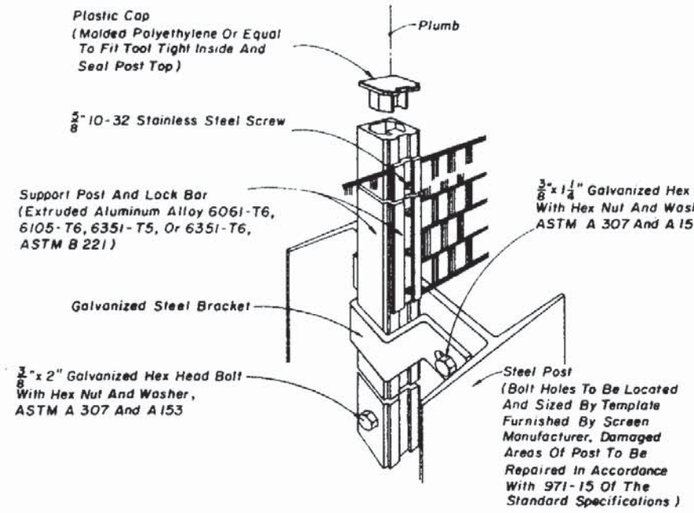

STEEL POST MOUNT

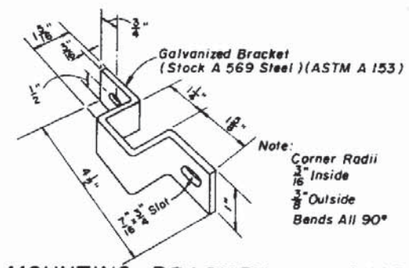

MOUNTING BRACKET

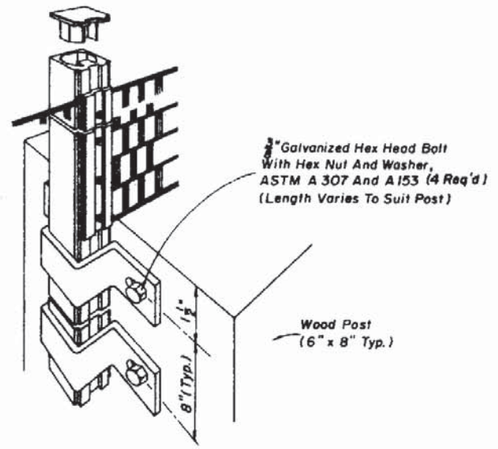

GUARDRAIL WOOD POST MOUNT

PLAN

FRONT VIEW

CENTER POST AND BASE

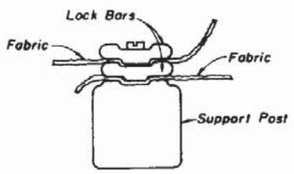

TOP VIEW

GLARE SCREEN SPLICE

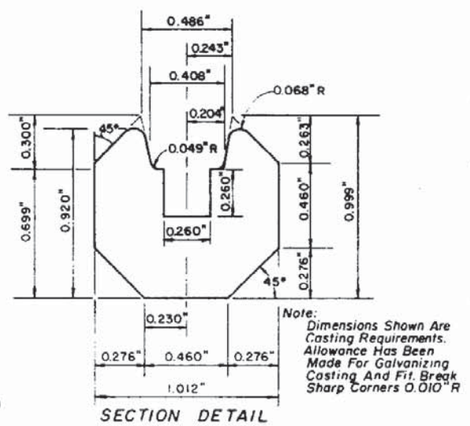

SECTION DETAIL

CENTER POST

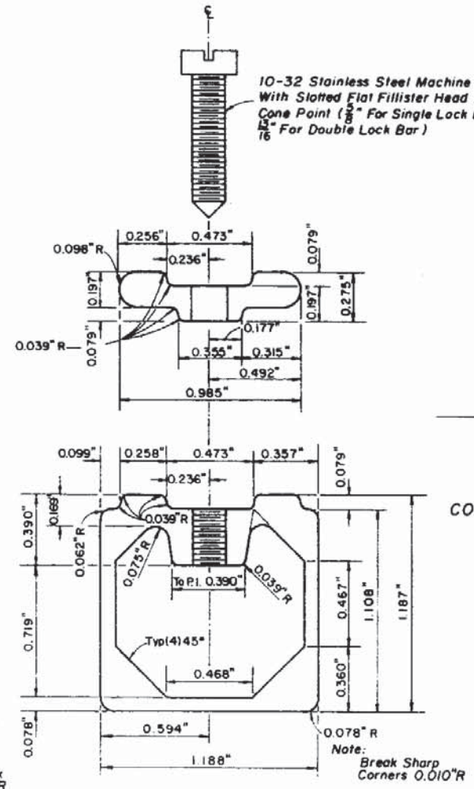

SECTIONS

SUPPORT POST AND LOCK BAR

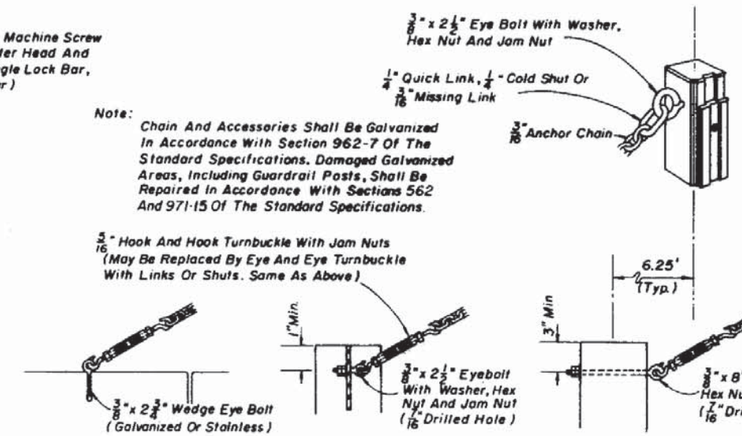

CONCRETE BARRIER WALL

STEEL GUARDRAIL POST

WOOD GUARDRAIL POST

CHAIN END ANCHORAGE

GENERAL NOTES

1. Cost of installation of screen, support posts, lock bars, leading and trailing end anchorages and all accessories shall be included in the contract unit price for Glare Screen (Knitted Polyester) L.F.

STATE OF FLORIDA DEPARTMENT OF TRANSPORTATION
ROAD DESIGN

GLARE SCREEN
KNITTED POLYESTER

	Names	Dates
Designed by		
Drawn by	HSD	2-80
Checked by	JVG	2-80
F.H.W.A. Approved: 10/7/80		

Approved By
Deputy Design Engineer, Roadways

Revision No.	Sheet No.	Index No.
86	1 of 1	460

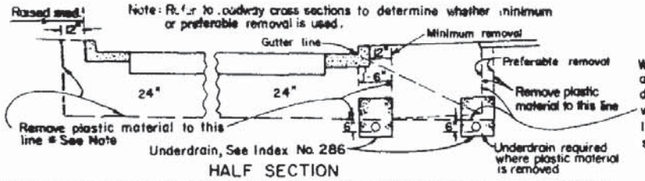

HALF SECTION

Where preferable method of removal governs and it is impossible to place the underdrain at the outer cut limit due to conflict with storm sewer mains, remove to these limits and place underdrain at location shown for minimum removal.

* NOTE: Where frequency of median breaks indicates that it is impractical to leave plastic material in the median, the designer may elect to indicate total removal of this material.
If during construction it becomes apparent, due to normal required construction procedures, that it is impractical to leave the plastic material in the median, the project engineer may authorize total removal of this material after clearing this change thru the Asst. Dist. Engr.-Const.

REMOVAL OF PLASTIC MATERIAL® AND LOCATION OF UNDERDRAIN IN MUNICIPAL CONSTRUCTION

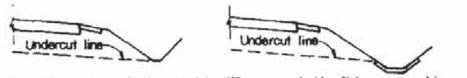

At locations where plastic material is being removed, the side ditches must be at least as deep as the undercut plane.

Where paved side ditches are used in areas of removal of plastic material, the top of the ditch pavement must be no higher than the undercut plane.

MISCELLANEOUS DETAILS

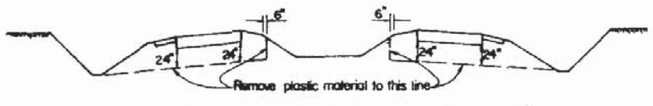

TYPICAL CUT SECTION ON TANGENT

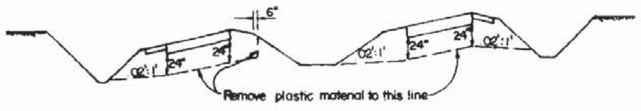

TYPICAL CUT SECTION ON SUPERELEVATION

REMOVAL OF PLASTIC MATERIAL® ON INTERSTATE AND PRIMARY SYSTEM HAVING DEPRESSED MEDIAN

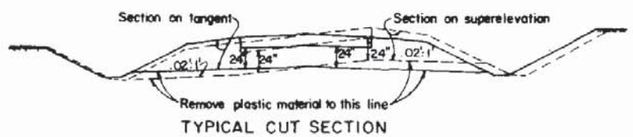

TYPICAL CUT SECTION

REMOVAL OF PLASTIC MATERIAL® ON MAJOR PRIMARY SYSTEM ROADS

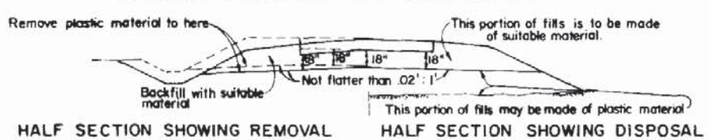

HALF SECTION SHOWING REMOVAL HALF SECTION SHOWING DISPOSAL

REMOVAL AND DISPOSAL OF PLASTIC MATERIAL® FOR SECONDARY AND MINOR PRIMARY SYSTEM ROADS

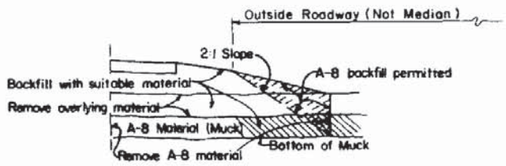

HALF SECTION

REMOVAL AND DISPOSAL OF A-8 MATERIAL IN RURAL CONSTRUCTION

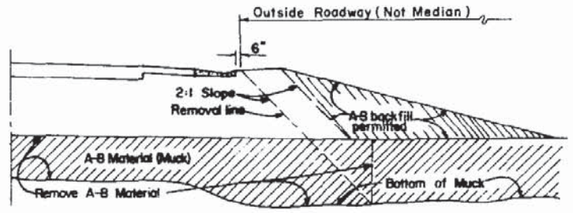

HALF SECTION

MUCK REMOVAL WHERE SHOULDER GUTTER IS CONSTRUCTED

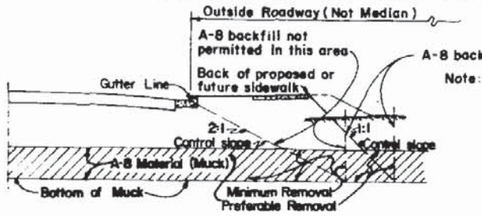

Note: Refer to roadway cross sections to determine whether "minimum" or "preferable" removal governs.

HALF SECTION

REMOVAL AND DISPOSAL OF A-8 MATERIAL IN MUNICIPAL CONSTRUCTION

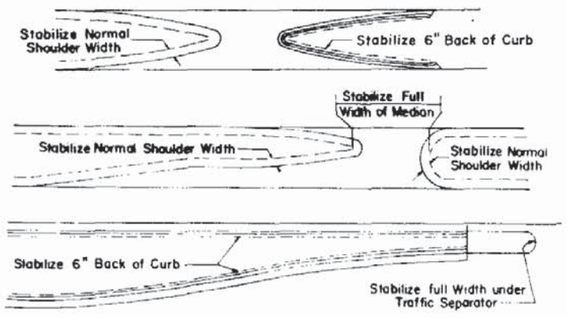

MEDIAN STABILIZING DETAILS

GENERAL STABILIZING NOTES:

(1) When typical section has curb or curb and gutter in median stabilize 6" back of curb.
(2) When typical section has shoulder with no curb or curb and gutter in median stabilize to normal shoulder width.
(3) Stabilize entire area under all paved traffic islands
(4) Stabilize full width under all traffic separators.

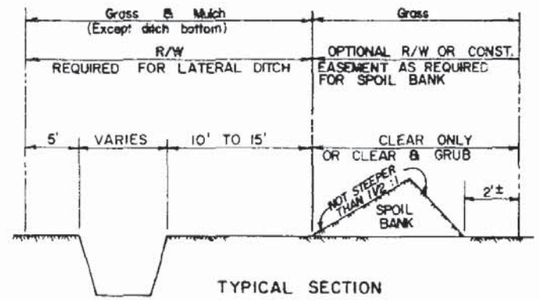

TYPICAL SECTION

NOTE.

1. Where no spoil is anticipated or when a large ditch or Canal is involved and spoil is anticipated on both sides, R/W should be adjusted accordingly.
2. Clearing and Grubbing is to extend 200' beyond the end of the ditch if necessary.
3. The bottom width of Lateral Ditches is to be 2' wider than the span of the Structure they drain or as shown on Plans.
4. No Spoil Bank will be permitted within 300' of the ℄ of the Project, measured at right angles thereto. Waste materials in this section shall be either hauled and deposited in areas approved by the Engineer, or spread on adjacent areas to the depth designated by the Engineer.
5. All excavation from Lateral Ditches shall be wasted unless otherwise shown on Lateral Ditch Sheets.

LATERAL DITCH SHOWING SPOIL BANK

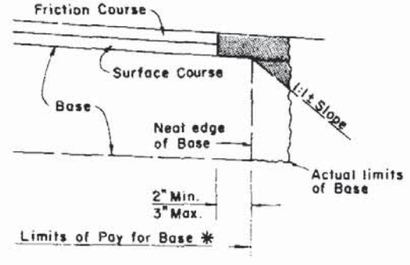

NOTES:
1. All surplus material in shaded area to be removed.
2. Payment for removal is included in the Base item.
3. * Area of base for payment will be calculated using the nominal width (3" Overhang).

REMOVAL OF EXCESS BASE MATERIAL

GENERAL NOTES

1. Minimum grade on underdrain pipe shall be 0.2%.
2. Gradation of the filter material shall conform to standard specifications.
3. In rural projects, where underdrain is to be constructed beneath the proposed pavement, the grade of the underdrain is to be such that the underdrain filter material will not extend above the bottom of the stabilized section of the subgrade.
4. All details shown on this sheet for the removal and disposal of unsuitable materials apply unless otherwise shown on the plans.
5. Where plastic material is undercut, backfill shall be made of suitable material.
6. The term "plastic material"® used in this drawing in conjunction with removal of plastic material is as defined under soil classifications for Plastic (P) and High Plastic (H) on Index No. 505.
7. The normal depth of side ditches for Interstate and major Primary System roads shall be 3.5' below the shoulder point except in special cases.
8. On Primary and Interstate highways where plastic material is permitted for use in roadway fill, the material may be placed above the existing water level (at the time of Construction) to within 4' of the proposed base. It should be placed uniformly in the lower portion of the embankment for some distance along the Project rather than full depth for short distances.

STATE OF FLORIDA DEPARTMENT OF TRANSPORTATION
ROAD DESIGN

EXCAVATION, EMBANKMENT & GRADING

	Names	Dates
Designed By		
Drawn By		
Checked By		
F.H.W.A. Approved		7/7/75

Approved By: Deputy Design Engineer, Roadways

Revision No.	Sheet No.	Index No.
85	1 of 1	500

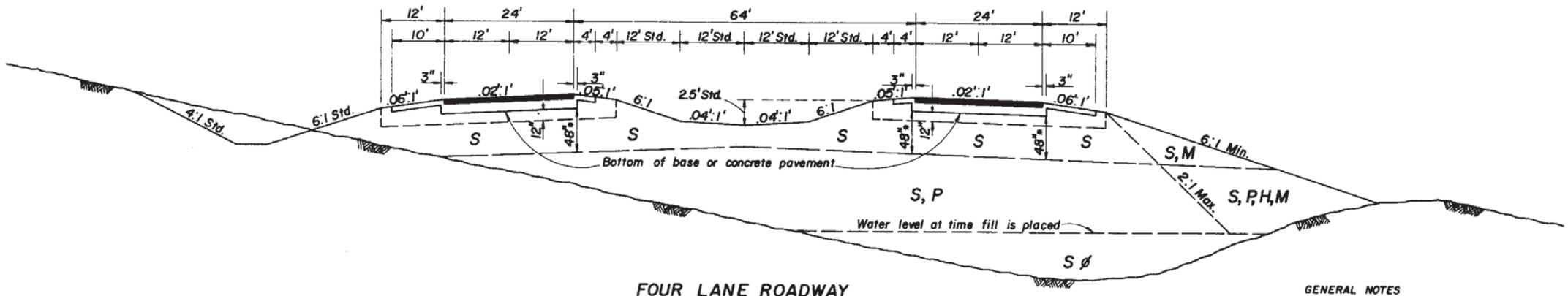

FOUR LANE ROADWAY

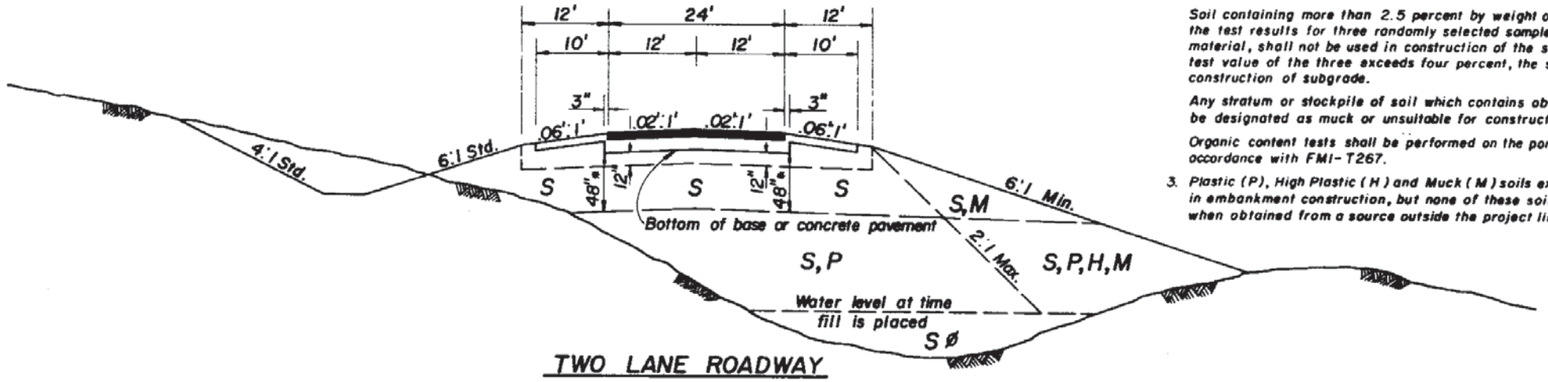

TWO LANE ROADWAY

SYMBOL	SOIL	CLASSIFICATION (AASHTO M-145)
S	Select	A-1, A-3, A-2-4
P	Plastic	A-2-5, A-2-6, A-2-7, A-4, A-5, A-6, A-7 (All with LL<50)
H	High Plastic	A-2-5, A-2-7, A-5 or A-7 (All with LL > 50)
M	Muck	A-8

Symbols listed Left to Right in order of preference.

ø Certain types of A-2-4 material are likely to retain excess moisture and may be difficult to dry and therefor should be used in the embankment above water level existing at time of construction.

* When otherwise shown on plans this dimension may be reduced to 24".

GENERAL NOTES

1. All dimensions shown are standard. The details shown on this Index drawing do not supersede the details shown on Index No. 500.
2. Soil containing more than five percent by weight of organic material, as determined by averaging the test results for three randomly selected samples from each stratum or stockpile of a particular material, shall be classified as muck. If one test from the three exceeds seven percent, the stratum or stockpile shall be classified as muck.

   Soil containing more than 2.5 percent by weight of organic material, as determined by averaging the test results for three randomly selected samples from each stratum or stockpile of a particular material, shall not be used in construction of the subgrade portion of the roadbed. If an individual test value of the three exceeds four percent, the stratum or stockpile shall not be suitable for construction of subgrade.

   Any stratum or stockpile of soil which contains obvious pockets of highly organic material may be designated as muck or unsuitable for construction of subgrade.

   Organic content tests shall be performed on the portion of a sample passing the No. 4 sieve in accordance with FMI-T267.
3. Plastic (P), High Plastic (H) and Muck (M) soils excavated within the project limits may be used in embankment construction, but none of these soil types are to be used for embankment construction when obtained from a source outside the project limits.

STATE OF FLORIDA DEPARTMENT OF TRANSPORTATION
ROAD DESIGN

EMBANKMENT UTILIZATION

	Names	Dates
Designed by		
Drawn by		
Checked by		

Approved By
Deputy Design Engineer, Roadways

F.H.W.A. Approved: 4/23/74

Revision No.	Sheet No.	Index No.
86	1 of 1	505

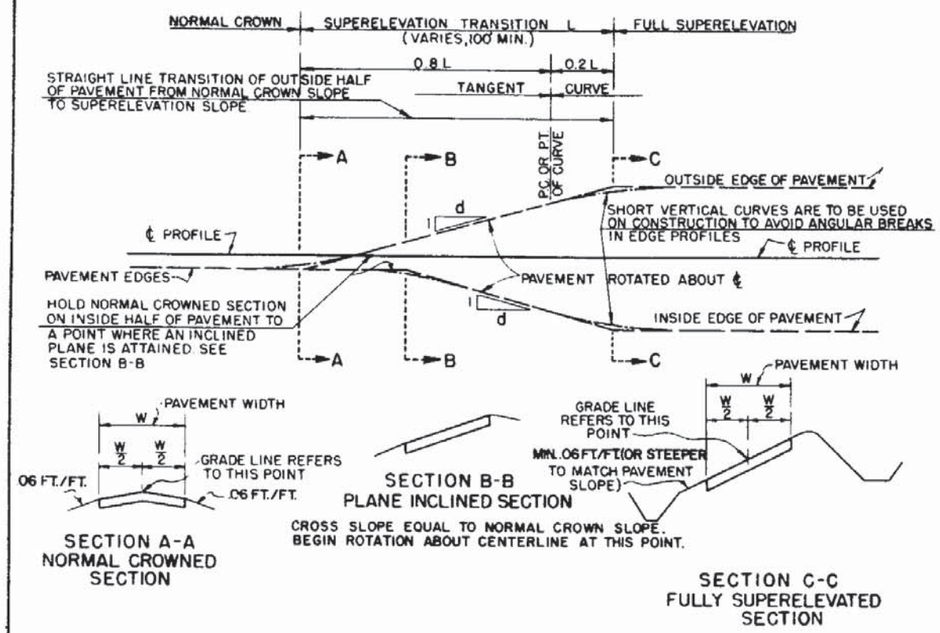

2-LANE OR 4-LANE PAVEMENT, NO MEDIAN

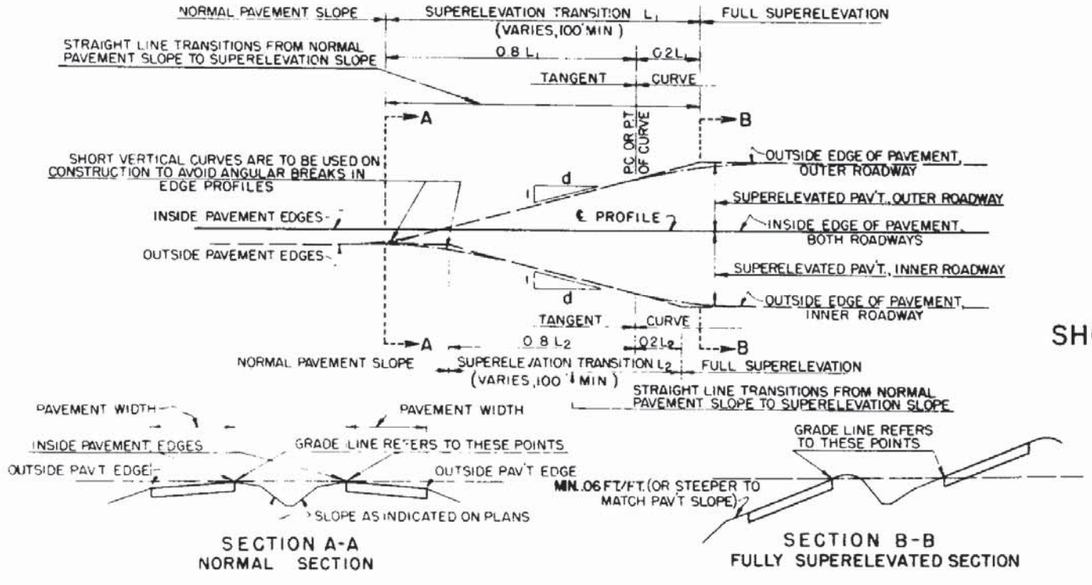

4-LANE PAVEMENT WITH MEDIAN

THESE TRANSITION DETAILS ARE TO APPLY IN ALL CASES, EXCEPT AT CURVES OF INSUFFICIENT LENGTH, INSUFFICIENT TANGENT LENGTH BETWEEN CURVES, P.C.C.'S OR P.R.C.'S, IN WHICH CASE THE DETAILS OF THE TRANSITIONS ARE TO BE INCLUDED IN THE DETAIL PLANS.

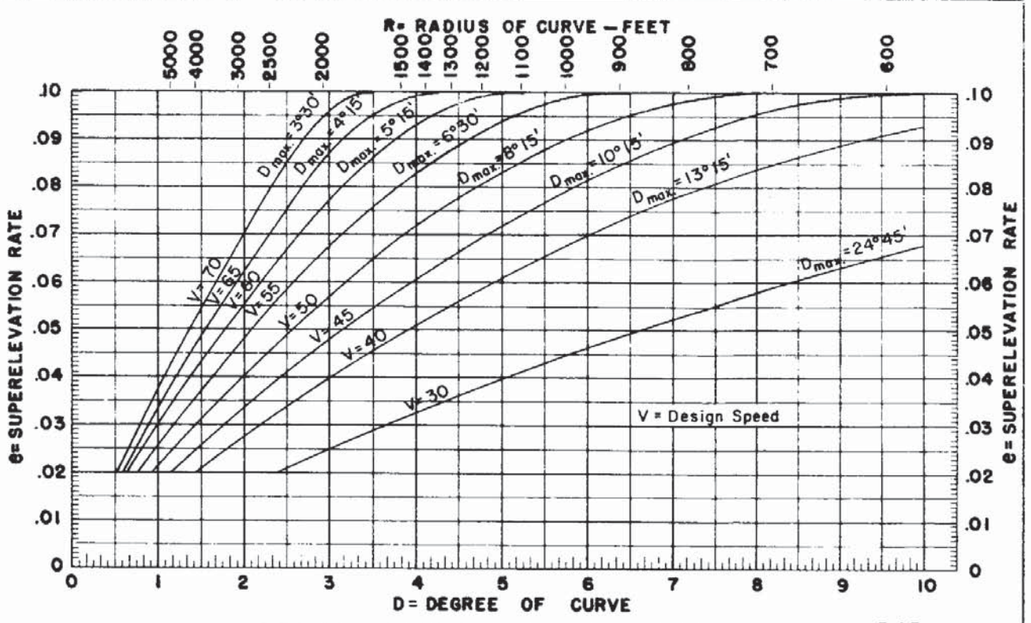

DESIGN SUPERELEVATION RATES $e_{MAX.} = 0.10$

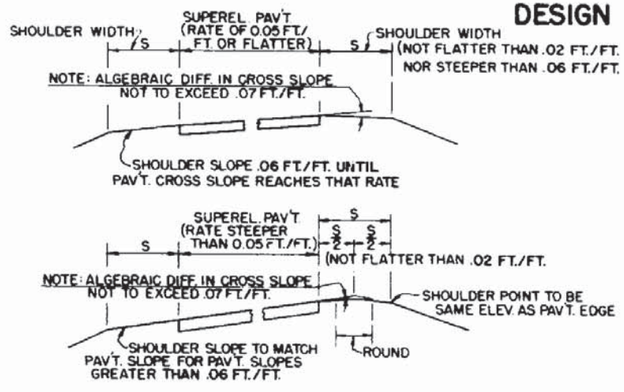

SHOULDER CONSTRUCTION WITH SUPERELEVATION

SHOULDER ON HIGH SIDE A SHOULDER SLOPE OF .06 FT./FT. DOWNWARD FROM THE EDGE OF PAVEMENT WILL BE MAINTAINED UNTIL A 0.07 FT./FT. BREAK IN SLOPE AT THE PAVEMENT EDGE IS REACHED DUE TO SUPERELEVATION OF THE PAVEMENT. AS THE PAVEMENT SUPERELEVATION INCREASES, THE 0.07 FT./FT. BREAK IN SLOPE WILL BE MAINTAINED AND THE SHOULDER FLATTENED UNTIL THE SHOULDER SLOPE REACHES THE MINIMUM OF .02 FT./FT. DOWNWARD FROM THE EDGE OF PAVEMENT. ANY FURTHER INCREASE IN PAVEMENT SUPERELEVATION WILL NECESSITATE SLOPING THE INSIDE HALF OF THE SHOULDER TOWARD THE PAVEMENT AND THE OUTER HALF OUTWARD, BOTH AT .02 FT./FT.
THESE SLOPES WILL BE HELD WITH FURTHER INCREASE IN PAVEMENT SUPERELEVATION UNTIL THE MAXIMUM BREAK OF 0.07 FT./FT. AT THE PAVEMENT EDGE IS AGAIN REACHED. THIS MAXIMUM BREAK WILL THEN BE HELD AND SHOULDER SLOPES STEEPENED WITH ADDITIONAL SUPERELEVATION.

SHOULDER ON LOW SIDE MAINTAIN .06 FT./FT. DROP ACROSS INSIDE SHOULDER UNTIL PAVEMENT CROSS SLOPE REACHES .06 FT./FT. FOR PAVEMENT CROSS SLOPES GREATER THAN .06 FT./FT., SHOULDER TO HAVE SAME SLOPE AS PAVEMENT.

THESE DETAILS APPLY TO BOTH PAVED AND GRASSED SHOULDERS.

MEDIAN SHOULDER .05 FT./FT. IN LIEU OF .06 FT./FT. ABOVE.

GENERAL NOTES FOR SUPERELEVATION

1. USE NORMAL SECTION WITH NO SUPERELEVATION FOR CURVES UP TO 0°-20' (0°-14' FOR DESIGN SPEEDS OF 70 MPH).
2. WHEN THE DEGREE OF CURVE IS 0°-21' OR GREATER (0°-15' FOR DESIGN SPEEDS OF 70 MPH) AND IS IN THE RANGE OF THE HORIZONTAL PORTION OF THE CURVE, SUPERELEVATE AT THE NORMAL CROSS SLOPE RATE OF .02 FT./FT. OR AS INDICATED BY THE CURVE FOR THE APPROVED DESIGN SPEED.
3. THE LENGTH OF SUPERELEVATION TRANSITION IS TO BE DETERMINED BY USING A RELATIVE SLOPE OF PAVEMENT EDGE TO PROFILE GRADE GIVEN IN THE TABLE BELOW, EXCEPT THAT THE MINIMUM LENGTH OF TRANSITION SHALL BE 100 FT.
4. FOR CURVES IN MUNICIPAL AREAS, SEE INDEX NO. 511.

SLOPE RATIOS FOR SUPERELEVATION TRANSITIONS

DESIGN SPEED, M.P.H	45-50	55-60	65-70	
1 : d	1:200	1:225	1:250	2 Lane & 4 Lane
	1:160	1:180	1:200	6 Lane
	1:150	1:170	1:190	8 Lane

STATE OF FLORIDA DEPARTMENT OF TRANSPORTATION
ROAD DESIGN

SUPERELEVATION

	Names	Dates
Designed by		
Drawn by	H F W	5/65
Checked by	L M F	10/74
F.H.W.A. Approved:		7/7/75

Approved By
Deputy Design Engineer, Roadways

Revision No.	Sheet No.	Index No.
86	1 of 2	510

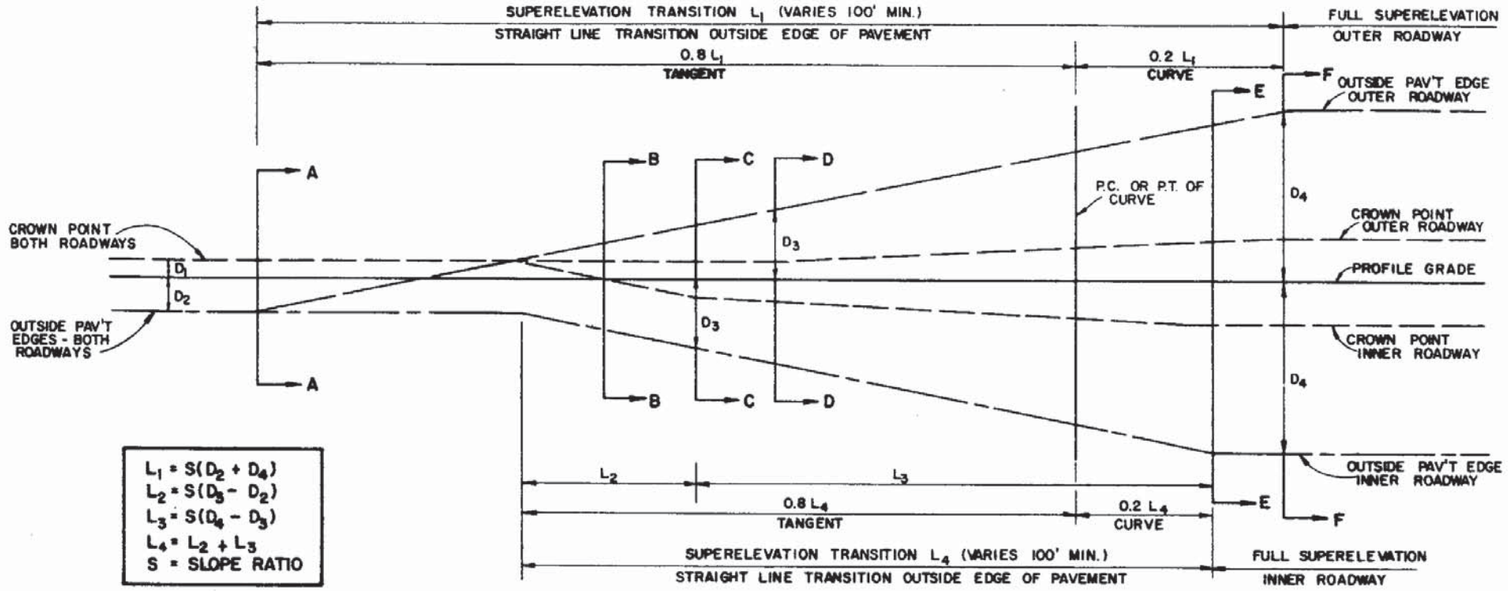

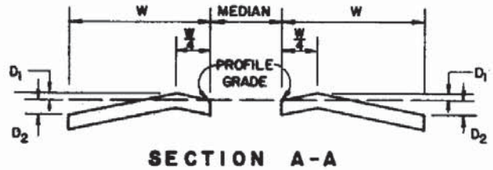

SECTION A-A

NORMAL CROWNED SECTION



SECTION B-B

SUPERELEVATION SECTION LT. & RT.



SECTION C-C

SUPERELEVATION SECTION LT.
PLANE INCLINED SECTION RT.

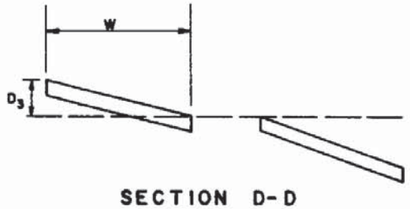

SECTION D-D

PLANE INCLINED SECTION LT.
SUPERELEVATION TRANSITION RT.

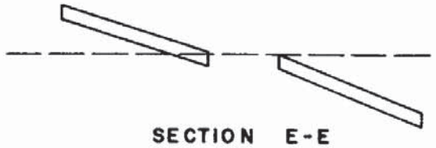

SECTION E-E

SUPERELEVATION TRANSITION LT.
FULL SUPERELEVATION RT.

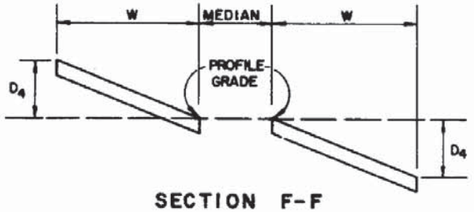

SECTION F-F

FULL SUPERELEVATION LT. & RT.

8-LANE PAVEMENT WITH ONE LANE SLOPED TO MEDIAN

STATE OF FLORIDA DEPARTMENT OF TRANSPORTATION
ROAD DESIGN

SUPERELEVATION

	Names	Dates
Designed by	WAL	8/77
Drawn by	LMF	8/77
Checked by	WAL	8/77
F.H.W.A. Approved: 11/2/77		

Approved By
Deputy Design Engineer, Roadways

Revision No.	Sheet No.	Index No.
81	2 of 2	510

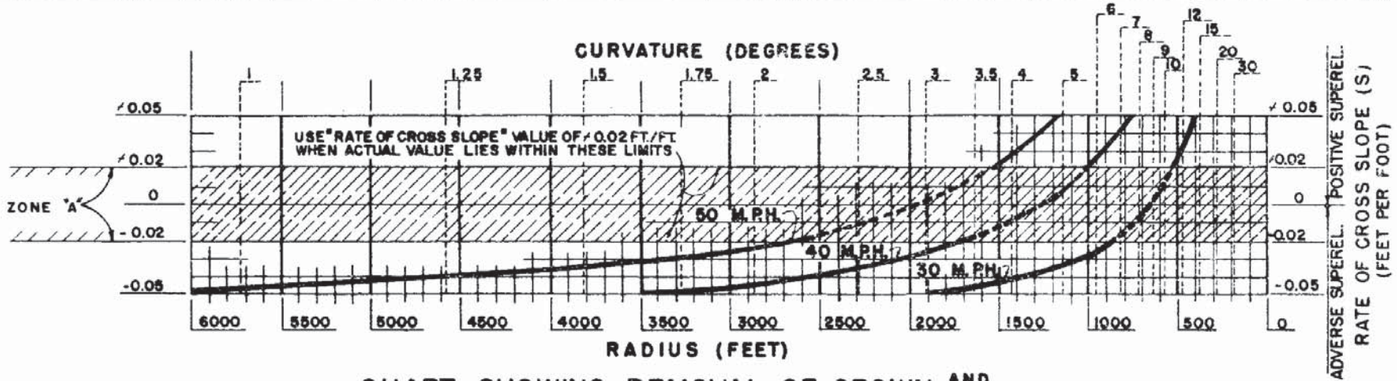

CHART SHOWING REMOVAL OF CROWN AND OR SUPERELEVATON NECESSARY FOR CURVATURE AT VARIOUS DESIGN SPEEDS

NOTE: WHEN THE ACTUAL SUPERELEVATION VALUE LIES WITHIN ZONE "A", USE A POSITIVE RATE OF 0.02 FT./FT.

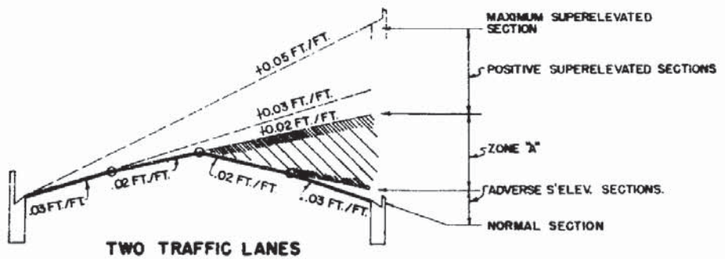

TWO TRAFFIC LANES EACH DIRECTION

TWO TRAFFIC LANES EACH DIRECTION WITH PARKING

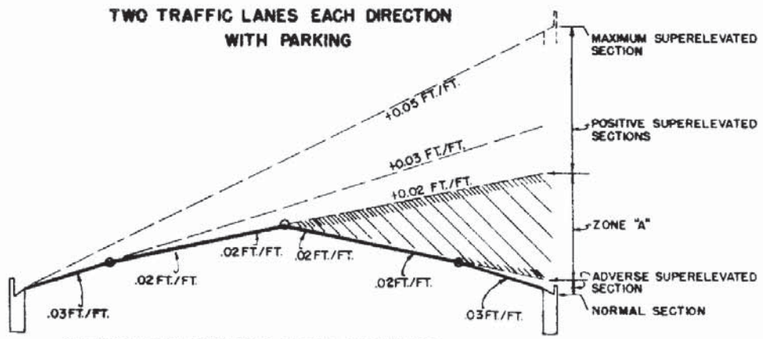

THREE TRAFFIC LANES EACH DIRECTION

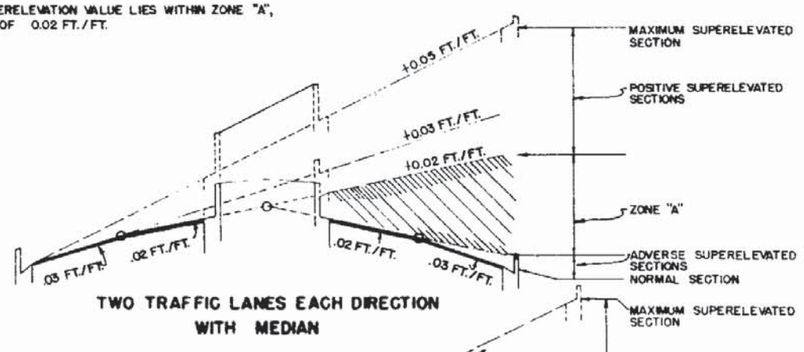

TWO TRAFFIC LANES EACH DIRECTION WITH MEDIAN

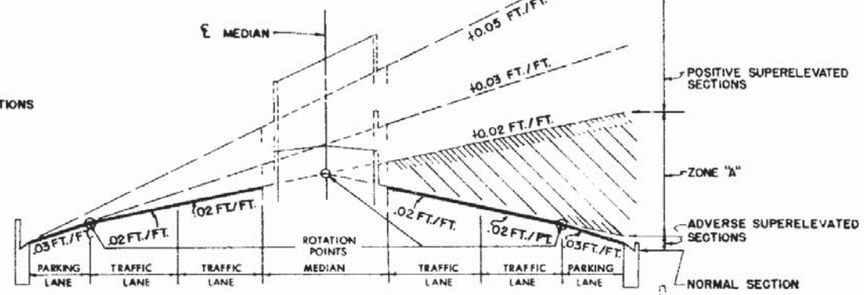

TWO TRAFFIC LANES EACH DIRECTION WITH MEDIAN AND PARKING

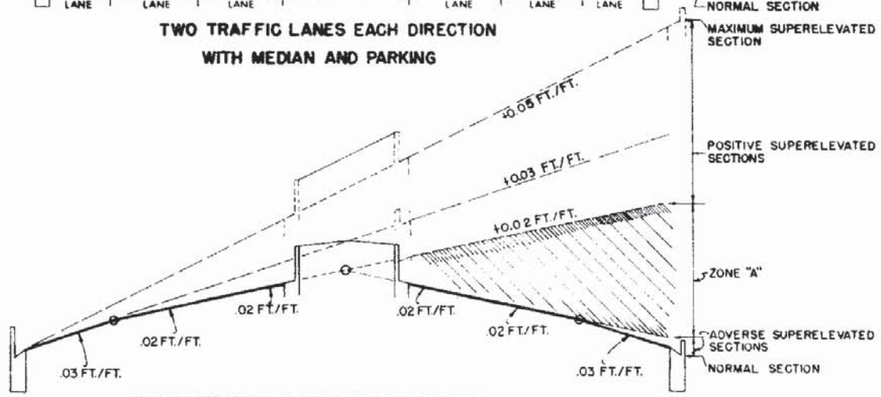

THREE TRAFFIC LANES EACH DIRECTION WITH MEDIAN

GENERAL NOTES FOR SUPERELEVATION

1. MAXIMUM RATE OF SUPERELEVATION (IN MUNICIPAL CONSTRUCTION) SHALL BE 0.05 FT./FT.
2. SUPERELEVATION SHALL BE OBTAINED BY ROTATING THE PLANE SUCCESSIVELY ABOUT THE BREAK POINTS OF THE SECTION UNTIL THE PLANE HAS ATTAINED A SLOPE EQUAL TO THAT REQUIRED BY THE CHART. SHOULD THE ROTATION TRAVERSE THE ENTIRE SECTION AND FURTHER SUPERELEVATION BE REQUIRED, THE REMAINING ROTATION OF THE PLANE SHALL BE ABOUT THE LOW EDGE OF THE INSIDE TRAVEL LANE.
   ADVERSE SUPERELEVATION OF SECTIONS WITH PARKING LANES. NO SUPERELEVATION WILL BE REQUIRED WHEN THE MAXIMUM ADVERSE SUPERELEVATION RATE IS GREATER THAN THE NORMAL SLOPE OF THE TRAFFIC LANE ADJACENT TO THE PARKING LANE.
3. WHEN POSITIVE SUPERELEVATION IS REQUIRED, THE SLOPE OF THE GUTTER ON THE HIGH SIDE SHALL BE A CONTINUATION OF THE SLOPE OF THE SUPERELEVATED PAVEMENT.
4. IN CONSTRUCTION, SHORT VERTICAL CURVES SHALL BE PLACED AT ALL ANGULAR PROFILE BREAKS WITHIN THE LIMITS OF THE SUPERELEVATION TRANSITION.
5. MINIMUM GUTTER GRADES WITHIN THE LIMITS OF THE SUPERELEVATION TRANSITION SHALL BE 0.2%.
6. THE VARIABLE SUPERELEVATION TRANSITION LENGTH "L" SHALL HAVE A MINIMUM VALUE OF 50 FEET FOR DESIGN SPEEDS UNDER 40 M.P.H. AND 75 FEET FOR DESIGN SPEEDS OF 40 M.P.H. OR GREATER.
7. MUNICIPAL SECTIONS HAVING LANE ARRANGEMENTS DIFFERENT FROM THOSE SHOWN, BUT COMPOSED OF A SERIES OF PLANES, SHALL BE SUPERELEVATED IN A SIMILAR MANNER.
8. FOR CURVES IN RURAL AREAS, SEE INDEX NO. 510.

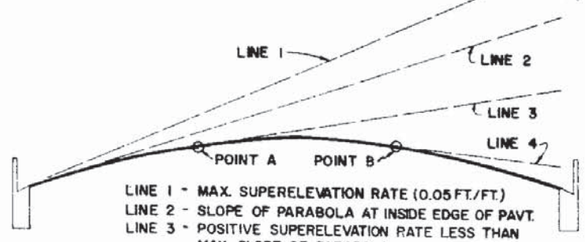

LINE 1 - MAX. SUPERELEVATION RATE (0.05 FT./FT.)
LINE 2 - SLOPE OF PARABOLA AT INSIDE EDGE OF PAVT.
LINE 3 - POSITIVE SUPERELEVATION RATE LESS THAN MAX. SLOPE OF PARABOLA.
LINE 4 - ADVERSE SUPERELEVATION.

VALUES OBTAINED FROM THE CHART ARE ALSO APPLICABLE TO A PARABOLIC CROWN SECTION. WHEN THIS TYPE SECTION IS USED, SUPERELEVATION IS ESTABLISHED BY ROTATING A TANGENT ABOUT THE ARC OF THE PARABOLIC CROWN UNTIL THE DESIRED SLOPE IS ATTAINED (POINTS A & B ON SKETCH). THE NORMAL PARABOLIC CROWN WILL BE MAINTAINED OUTSIDE THE LIMITS OF THE PLANE THUS FORMED.

PARABOLIC SECTION

STATE OF FLORIDA DEPARTMENT OF TRANSPORTATION
ROAD DESIGN

SUPERELEVATION
MUNICIPAL CONSTRUCTION

	Names	Dates
Designed by	WLB	2/66
Drawn by	CDR	1/67
Checked by	RLO	1/67

Approved By: Deputy Design Engineer, Roadways

F.H.W.A. Approved: 5/20/77

Revision No.	Sheet No.	Index No.
81	1 of 2	511

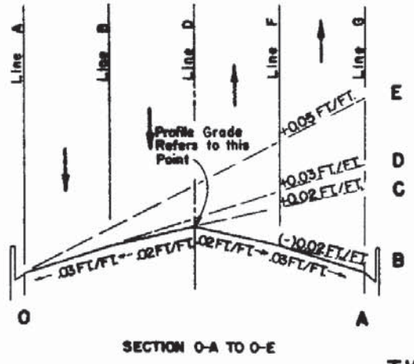

SECTION O-A TO O-E

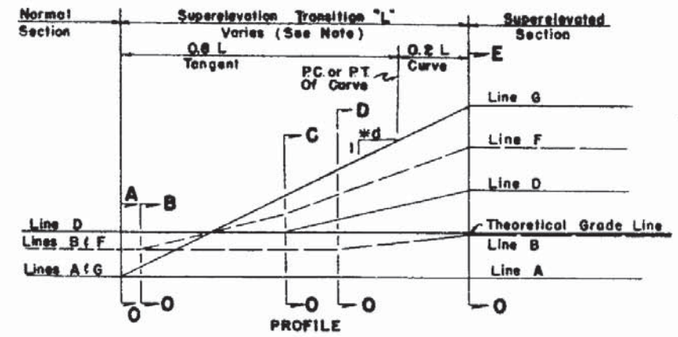

PROFILE

TWO LANES EACH DIRECTION

LINE	DESCRIPTION
A	INSIDE TRAFFIC LANE
B	INSIDE LANE LINE
C	INSIDE MEDIAN EDGE PAVEMENT
D	℄ CONSTRUCTION
E	OUTSIDE MEDIAN EDGE PAVEMENT
F	OUTSIDE LANE LINE
G	OUTSIDE TRAFFIC LANE

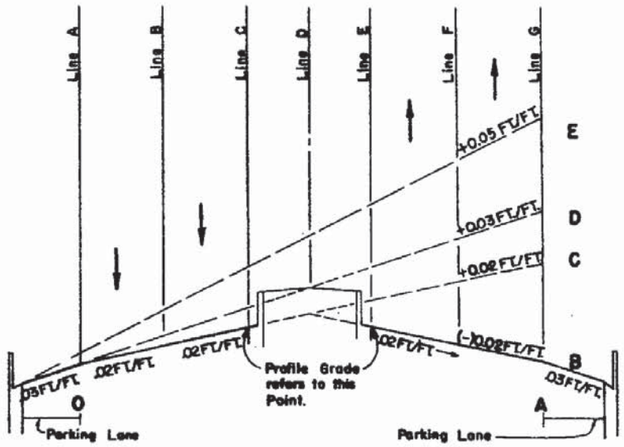

SECTION O-A TO O-E

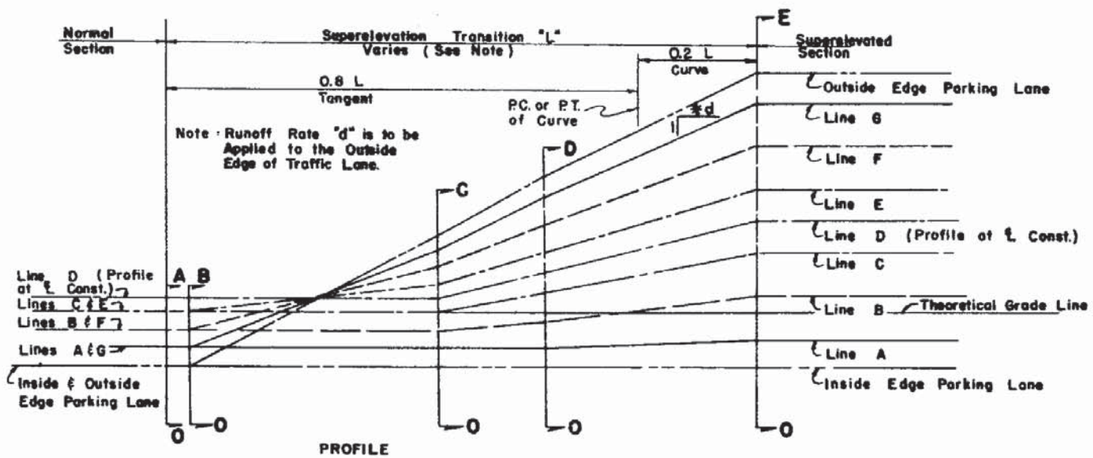

PROFILE

*d (SLOPE RATIO)	
30 MPH	1 : 100
40 MPH	1 : 125
50 MPH	1 : 150

TWO LANES EACH DIRECTION WITH MEDIAN AND REFUGE LANE

D	R	V=30mph e	V=40mph e	V=50mph e
0° 15'	22918'	NC	NC	NC
0° 30'	11459'	NC	NC	NC
0° 45'	7639'	NC	NC	RC
1° 00'	5730'	NC	RC	RC
1° 30'	3820'	RC	RC	.024
2° 00'	2865'	RC	.022	.028
2° 30'	2292'	RC	.026	.031
3° 00'	1910'	.020	.029	.033
3° 30'	1637'	.023	.032	.036
4° 00'	1432'	.025	.033	.038
5° 00'	1146'	.028	.036	.043
6° 00'	955'	.031	.039	.047
7° 00'	819'	.032	.041	
8° 00'	716'	.034	.044	
9° 00'	637'	.035	.046	
10° 00'	573'	.037	.048	
11° 00'	521'	.038		
12° 00'	477'	.039		
13° 00'	441'	.040		
14° 00'	409'	.043	e Max.=0.05	
16° 00'	358'	.045		
18° 00'	318'	.047		
20° 00'	286'	.050		

The superelevation rates shown above are to be used for urban (curb & gutter) arterials in suburban areas where sufficient R/W may be acquired to make suitable connections.

NOTE : THE SECTIONS AND PROFILES SHOWN ON THIS SHEET ARE EXAMPLES OF THE SUPERELEVATION TRANSITIONS. SIMILAR SCHEMES SHOULD BE USED FOR ROADWAYS HAVING DIFFERENT SECTION DESIGNS.

STATE OF FLORIDA DEPARTMENT OF TRANSPORTATION
ROAD DESIGN

SUPERELEVATION
MUNICIPAL CONSTRUCTION

	Names	Dates
Designed by	WLB	2/66
Drawn by	CDR	1/67
Checked by	RLO	1/67
F.H.W.A. Approved: 5/20/77		

Approved By
Deputy Design Engineer, Roadways

Revision No.	Sheet No.	Index No.
81	2 of 2	511

LAYER THICKNESS FOR ASPHALTIC CONCRETE STRUCTURAL COURSES

COURSE THICKNESS (Inches)	LAYER THICKNESS (Inches)																															
	S-II/S-I Top Layer				S-II/S-III Top Layer				Type S-I				S-I/S-III Top Layer				Type S-III				Type II				Type III				SAHM			
	1st	2nd	3rd	4th	1st	2nd	3rd	4th	1st	2nd	3rd	4th	1st	2nd	3rd	4th	1st	2nd	3rd	4th	1st	2nd	3rd	4th	1st	2nd	3rd	4th	1st	2nd	3rd	4th
1																	1				1				1				1			
1½																	¾	¾			¾	¾			¾	¾			¾	¾		
2													1¼	¾			1	1			1	1			1	1			1	1		
2½					1½	1			1¼	1¼			1½	1			1¼	1¼			1¼	1¼			1¼	1¼			1¼	1¼		
3	1½	1½			2	1			1½	1½			2	1			1	1	1		1	1	1		1	1	1		1	1	1	
3½	2	1½			2	¾*	¾		2	1½			1½	1¼	¾		1¼	1¼	1		1¼	1¼	1		1¼	1¼	1		1¼	1¼	1	
4	2	2			1½	1½	1		2	2			1½	1½	1		1¼	1¼	¾	¾	1¼	1¼	¾	¾	1¼	1¼	¾	¾	1¼	1¼	¾	¾
4½	1½	1½	1½		2	1½	1		1½	1½	1½		2	1½	1		1¼	1¼	1	1	1¼	1¼	1	1	1¼	1¼	1	1	1¼	1¼	1	1
5	2	1½	1½		2	2	1		2	1½	1½		2	2	1		1¼	1¼	1¼	1¼	1¼	1¼	1¼	1¼	1¼	1¼	1¼	1¼	1¼	1¼	1¼	1¼
5½	2	2	1½		1½	1½	1½	1	2	2	1½		2	1½	1¼	¾																
6	2	2	2		2	1½	1½	1	2	2	2		2	1½	1½	1																
6½	2	1½	1½	1½	2	2	1½	1	2	1½	1½	1½	2	2	1½	1																
7	2	2	1½	1½	2	2	2	1	2	2	1½	1½	2	2	2	1																
7½	2	2	2	1½					2	2	2	1½																				
8	2	2	2	2					2	2	2	2																				

* Top two layers = S-III

GENERAL NOTES

1. If combinations other than those shown in the table are used, the thickness must be consistant with the following thickness ranges and the details must be given on the Typical Section Sheet:

Type Mix	Min.	Max.
S-I	1¼"	2"
S-II	1½"	2"
S-III	¾"	1¼"

2. When quantities are bid as tonnage items, equivalent tonage layer thickness will be constructed (i.e., 100# = one square yard inch).

3. When construction includes paving of adjacent 1" - 1½" shoulders, the layer thickness(s) for the shoulder shall be the same as the upper roadway pavement layer(s) in order to facilitate paving. This may limit combinations available. (See Note 1)

STATE OF FLORIDA DEPARTMENT OF TRANSPORTATION
ROAD DESIGN

FLEXIBLE PAVEMENT

LAYER THICKNESS FOR STRUCTURAL COURSES

	Names	Dates
Designed by		
Drawn by	WNL	9/85
Checked by	WNL	9/85

F.H.W.A. Approved:

Approved By J.C. [signature]
Deputy Design Engineer, Roadways

Revision No.	Sheet No.	Index No.
86	1 of 1	513

OPTIONAL BASE GROUPS AND STRUCTURAL NUMBERS

Base Group and Structural Range	Limerock LBR 100 (.18)	Composite Limerock-Asph. Base (Limerock LBR 100)* (.25) and (.18)	Cemented Coquina LBR 100 (.18)	ABC-1 (Min. Marshall Stab. 500) (.20)	ABC-2 (Min. Marshall Stab. 750) (.25)	ABC-3 (Min. Marshall Stab. 1000) (.30)	Bank Run Shell LBR 100 (.135)	Soil Cement (300 PSI) (Plant Mixed) (.15)	Limerock Stabilized LBR 70 (.12)	Sand-Clay LBR 70 (.12)	Shell LBR 70 (.12)	Shell Stabilized LBR 70 (.10)	Soil Cement (300 PSI) (Road Mixed) (.15)	SAHM (Min. Marshall Stab. 300)□ (.15)	Graded Aggregate Base LBR 100 (.15)	ABC-1 and 4" Limerock Sub-Base LBR 100 (.20) and (.18)	ABC-2 and 4" Limerock Sub-Base LBR 100 (.25) and (.18)	ABC-3 and 4" Limerock Sub-Base LBR 100 (.30) and (.18)	ABC-1 and 4" Cemented Coquina Sub-Base LBR 100 (.20) and (.18)	ABC-2 and 4" Cemented Coquina Sub-Base LBR 100 (.25) and (.18)	ABC-3 and 4" Cemented Coquina Sub-Base LBR 100 (.30) and (.18)	ABC-1 and 4" Bank Run Shell Sub-Base LBR 100 (.20) and (.135)	ABC-2 and 4" Bank Run Shell Sub-Base LBR 100 (.25) and (.135)	ABC-3 and 4" Bank Run Shell Sub-Base LBR 100 (.30) and (.135)	ABC-1 and 4" Graded Aggregate Sub-Base LBR 100 (.20) and (.15)	ABC-2 and 4" Graded Aggregate Sub-Base LBR 100 (.25) and (.15)	ABC-3 and 4" Graded Aggregate Sub-Base LBR 100 (.30) and (.15)	Soil Cement (500 PSI) (Plant Mixed) (.20)	Econocrete (800 PSI) (.22)	Econocrete (1100 PSI) (.25)
1 (.58 – .62)	Δ 001 4"		Δ 003 4"	Δ 005 4"	Δ 006 4"	Δ 007 4"	004 4½" .61	008 4" .60	009 5" .60	010 5" .60	011 5" .60	012 6" .60	Δ 013 6"	014 4" .60	015 4" .60												Δ 028 4"	Δ 029 4"	Δ 030 4"
2 (.72 – .78)	999 4" .72	Δ 042 4"	043 4" .72	045 4"	Δ 046 4"	Δ 047 4"	044 5½" .74	048 5" .75	049 6" .72	050 6" .72	051 6" .72	052 7½" .75	Δ 053 6"	054 5" .75	055 5" .75												068 4" .80	Δ 069 4"	Δ 070 4"
3 (.86 – .94)	998 5" .90	082 4½" .92	984 5" .90	085 4½" .90	Δ 086 4"	Δ 087 4"	084 6½" .88	088 6" .90	089 7½" .90	090 7½" .90	091 7½" .90	092 9" .90	093 6" .90	094 6" .90	095 6" .90												108 4½" .90	109 4" .88	Δ 110 4"
4 (1.00 – 1.10)	985 6" 1.08	122 5" 1.01	123 6" 1.08	125 5" 1.00	126 4" 1.00	Δ 127 4" 1.20	124 7½" 1.01	128 7" 1.05	129 9" 1.08	130 9" 1.08	131 9" 1.08	132 10½" 1.05	133 7" 1.05		135 7" 1.05												148 5" 1.00	149 4½" .99	150 4" 1.00
5 (1.15 – 1.25)	997 6½" 1.17	162 6" 1.19	996 6½" 1.17	995 6" 1.20	166 5" 1.25	167 4" 1.20	164 8½" 1.15	168 8" 1.20	169 10" 1.20	170 10" 1.20	171 10" 1.20	172 12" 1.20	173 8" 1.20		175 8" 1.20												188 5½" 1.10	189 5" 1.10	190 5" 1.25
6 (1.29 – 1.41)	201 7½" 1.35	202 7" 1.37	203 7½" 1.35	205 6½" 1.30	206 5½" 1.38	207 4½" 1.35	204 10" 1.35	208 9" 1.35	209 11" 1.32	210 11" 1.32	211 11" 1.32				215 9" 1.35	Δ 216 4"			Δ 219 4"			222 4" 1.34			225 4" 1.40			228 6½" 1.30	229 6" 1.32	230 5½" 1.36
7 (1.44 – 1.56)	994 8" 1.44	242 7½" 1.46	993 8" 1.44	992 7½" 1.50	246 6" 1.50	247 5" 1.50	244 11" 1.49	248 10" 1.50	249 12" 1.44	250 12" 1.44	251 12" 1.44				255 10" 1.50	256 4" 1.52			259 4" 1.52			262 4½" 1.44	263 4" 1.54		265 4½" 1.50			268 7½" 1.50	269 7" 1.54	270 6" 1.50
8 (1.58 – 1.72)	991 9" 1.62	282 8½" 1.64	283 9" 1.62	285 8" 1.60	286 6½" 1.62	287 5½" 1.65	284 12" 1.62	288 11" 1.65							295 11" 1.65	296 4½" 1.62	297 4" 1.72		299 4½" 1.62	300 4" 1.72		302 5½" 1.64	303 4½" 1.67		305 5" 1.60	306 4" 1.60		308 8" 1.60	309 7½" 1.65	310 6½" 1.63
9 (1.73 – 1.87)	990 10" 1.80	322 9" 1.73	989 10" 1.80	325 9" 1.80	326 7" 1.75	327 6" 1.80									335 12" 1.80	336 5½" 1.82	337 4½" 1.85	Δ 338 4"	339 5½" 1.82	340 4½" 1.85	Δ 341 4"	342 6" 1.74	343 5" 1.79	344 4" 1.74	345 6" 1.80	346 5" 1.85	347 4" 1.80		349 8" 1.76	350 7" 1.75
10 (1.88 – 2.02)	983 10½" 1.89	362 10" 1.91	363 10½" 1.89	988 9½" 1.90	366 8" 2.00	367 6½" 1.95									Ø 375 13" 1.95	376 6" 1.92	377 5" 1.97	378 4" 1.92	379 6" 1.92	380 5" 1.97	381 4" 1.92	382 7" 1.94	383 5½" 1.92	384 4½" 1.89	385 6½" 1.90	386 5½" 1.98	387 4½" 1.95		389 9" 1.98	390 8" 2.00
11 (2.03 – 2.17)	987 11½" 2.07	402 11" 2.09	403 11½" 2.07	405 10½" 2.10	406 8½" 2.12	407 7" 2.10									Ø 415 14" 2.10	416 7" 2.12	417 5½" 2.10	986 4½" 2.07	419 7" 2.12	420 5½" 2.10	421 4½" 2.07	422 7½" 2.04	423 6" 2.04	424 5" 2.04	425 7½" 2.10	426 6" 2.10	427 5" 2.10		429 9½" 2.09	430 8½" 2.13
12 (2.18 – 2.32)	441 12½" 2.25	442 11½" 2.18	443 12½" 2.25	445 11" 2.20	446 9" 2.25	447 7½" 2.25										456 7½" 2.22	457 6" 2.22	458 5" 2.22	459 7½" 2.22	460 6" 2.22	461 5" 2.22	462 8½" 2.24	463 7" 2.29	464 5½" 2.19	465 8" 2.20	466 6½" 2.22	467 5½" 2.25		469 10" 2.20	470 9" 2.25
13 (2.33 – 2.47)	Ø 481 13" 2.34	482 12½" 2.36	Ø 483 13" 2.34		486 9½" 2.38	487 8" 2.40										496 8½" 2.42	497 6½" 2.35	498 5½" 2.37	499 8½" 2.42	500 6½" 2.35	501 5½" 2.37	502 9" 2.34	503 7½" 2.42	504 6" 2.34	505 9" 2.40	506 7" 2.35	507 6" 2.40		509 11" 2.42	510 9½" 2.38
14 (2.48 – 2.62)	Ø 521 14" 2.52	522 13½" 2.54	Ø 523 14" 2.52		526 10" 2.50	527 8½" 2.55										536 9" 2.52	537 7½" 2.60	538 6" 2.52	539 9" 2.52	540 7½" 2.60	541 6" 2.52	542 10" 2.54	543 8" 2.54	544 6½" 2.49	545 9½" 2.50	546 8" 2.60	547 6½" 2.55		549 11½" 2.53	550 10" 2.50
15 (2.63 – 2.77)		556 14" 2.63			566 11" 2.75	567 9" 2.70										576 10" 2.72	577 8" 2.72	982 6½" 2.67	579 10" 2.72	580 8" 2.72	581 6½" 2.67	582 10½" 2.64	583 8½" 2.67	584 7" 2.64	585 10½" 2.70	586 8½" 2.72	587 7" 2.70		589 12" 2.64	590 11" 2.75
□ 16 (0.60 – 0.61)	Δ 981 4"		Δ 980 4"	604 3" 0.60	Δ 605 3"	Δ 606 3"	607 4½" 0.61	608 4" 0.60	609 5" 0.60	610 5" 0.60	611 5" 0.60	612 6" 0.60	Δ 613 6"	614 4" 0.60	615 4" 0.60												Δ 628 4"	Δ 629 4"	Δ 630 4"

Not Recommended For Design — Year 18 Kip Loads >1,000,000

These Options Are Acceptable For Use On Widening Projects (Up To 12 Feet In Width)

* Top 1½" consist of ABC Type 2 with structural number of .25.

Ø To be used for widening only.

Δ Based on minimum practical thickness.

□ Generally restricted to shoulder base construction.

900 Series option codes indicate base options which have been revised

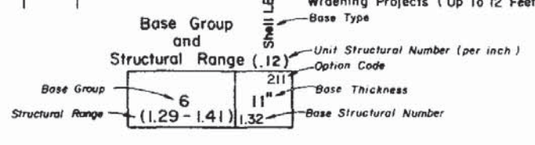

LEGEND

STATE OF FLORIDA DEPARTMENT OF TRANSPORTATION
ROAD DESIGN

OPTIONAL BASE GROUPS AND STRUCTURAL NUMBERS

	Names	Dates
Designed by	DCB	10/79
Drawn by	HSD	10/79
Checked by	KNM	10/79
F.H.W.A. Approved:		10/79

Approved By: [signature]
State Design Engineer, Roadways

Revision No.	Sheet No.	Index No.
86	1 of 1	514

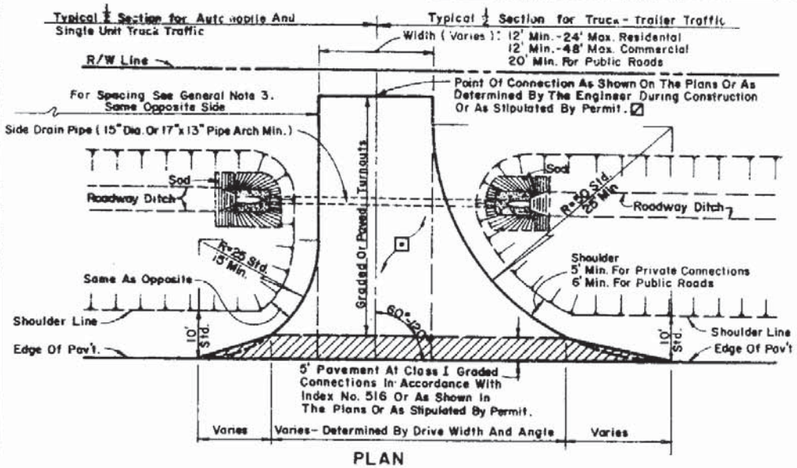

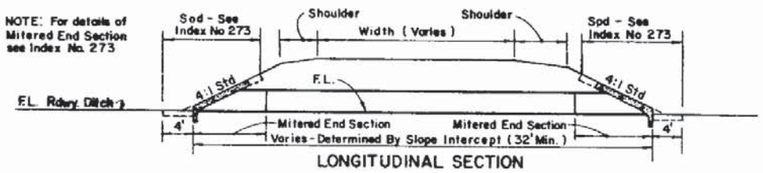

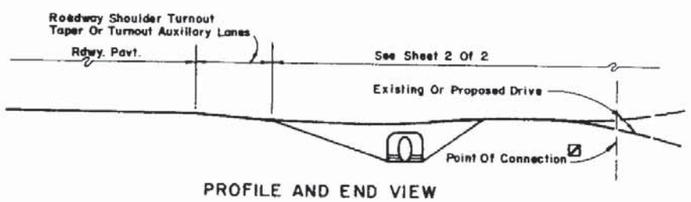

PROFILE AND END VIEW

⊡ Stable material may be required for graded turnouts to private property as directed by the Engineer in accordance with Section 102-6 of the Standard Specifications.

☒ Paved turnouts are to be constructed for Class I, II and III paved connecting facilities. The connecting point will be determined by the Engineer.

Paved turnouts are to be constructed for Class II graded connecting facilities. The connecting point shall be 30' from edge of roadway pavement or at R/W line, whichever is less.

Paved turnouts are to be constructed for all Class III connecting facilities. The connecting point shall be at the R/W line.

RURAL TURNOUT CONSTRUCTION

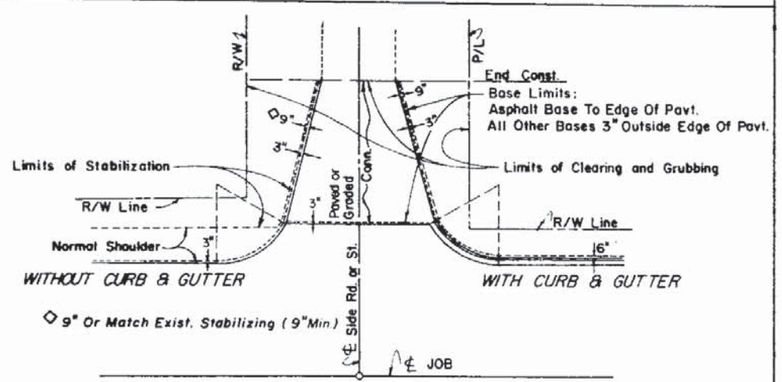

LIMITS OF CLEARING & GRUBBING AND STABILIZING AT INTERSECTIONS

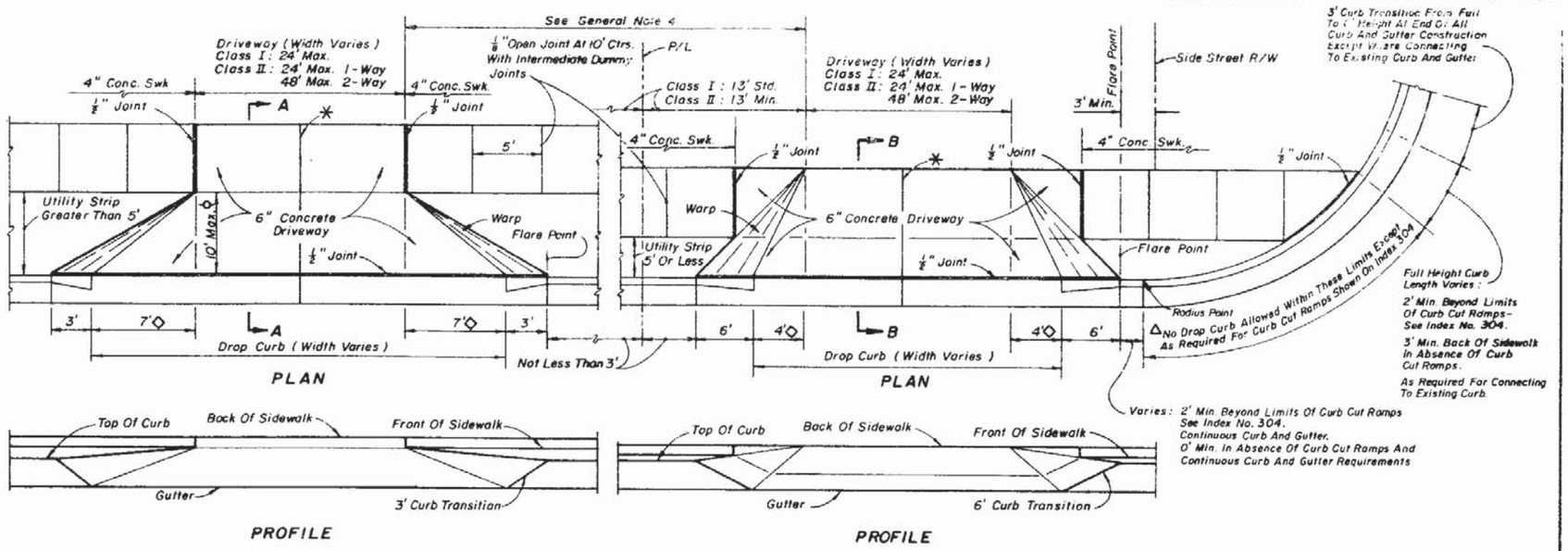

△ When connecting to existing curb and gutter sections, the no drop curb limits should extend back to the radius point of the curb and gutter along the sidestreet. With or without curb and gutter, no driveway should encroach on the corner radius.

◇ When grass strip is 10' or greater, driveway width shall be of a uniform width from point of warp to the back of sidewalk or the right of way.

* ½" Open joints placed at equal (20' max.) intervals for driveways over 20' wide. Joints in curb and gutter to match joints in driveways.

◇ Class I Driveway : 7' & 4' std., 0' min.
Class II Driveway : 7' & 4' min.
Smoother driveway operations with least interference and affect on highway traffic occurs when the base dimensions are 7' and 4' as shown.
To better fit property conditions for Class I Non-Commercial driveways, the flare dimensions may be reduced.

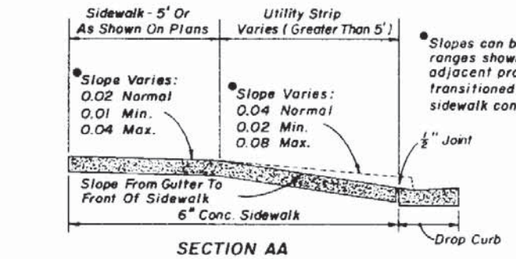

SECTION AA

WHEN DISTANCE BETWEEN CURB & SIDEWALK IS GREATER THAN 5'

Slopes can be adjusted within the ranges shown to improved ties to adjacent property and are to be transitioned to avoid distortion in sidewalk continuity.

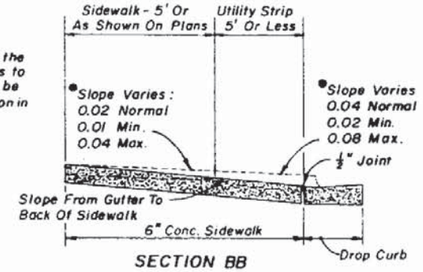

SECTION BB

WHEN DISTANCE BETWEEN CURB & SIDEWALK IS 5' OR LESS

CLASS I AND CLASS II URBAN TURNOUT CONSTRUCTION

GENERAL NOTES

1. For turnout classifications see the manual entitled "Policy And Guidelines For Vehicular Connections To Roads On The State Highway System "date February 1985 and effective August 15, 1985. Information on this index in variance with the manual supercedes the information in the manual. The manual should be referred to for special applications, and, for exceptions due to extreme conditions.
2. No driveways, turnouts, or side drains are to be constructed without compensation for materials from the owner except for replacement of approved driveways, turnouts, and/or side drains existing at the time of beginning of roadway construction and if desired by the owner. All new or reconstructed driveways, turnouts, and side drains must conform to the size limits indicated above.
3. In rural areas where the abutting property owner desires installation of turnouts and provided there is adequate frontage for proper driveway separation, the Department will construct or will allow the construction of a maximum of two 24' (Class I, I or 2-Way), two 24' (Class II or III, I-Way) or two 48' (Class II or III, 2-Way) turnouts along the same frontage with a minimum of 50' of space between them. For more desirable width and spacing, limiting conditions and for exceptions see the manual.
4. In urban areas, at the request of the abutting property owner or his assignee, and provided there is adequate frontage for proper driveway separating, the Department will construct or will allow the construction of a maximum of two 24' (Class I, I or 2-Way), two 24' (Class II or III, I-Way) or two 48' (Class II or III, 2-Way) turnouts along the same frontage with a minimum of 26' of space between them (6' between curb transition). For more desirable width and spacing, limiting conditions and for exceptions see the manual.
5. Class III turnouts in urban areas are to be constructed as intersecting streets with curb and gutter.
6. In both urban and rural areas, wherever dual driveways are allowed, that portion of the Right-of-Way between the drives and outside the pavement limits of the highway shall be maintained as a "No-Parking-Area".
7. Stabilized subgrade not required for paved turnouts to private property.
8. For detail of drop curb see Index No. 300.

STATE OF FLORIDA DEPARTMENT OF TRANSPORTATION
ROAD DESIGN

TURNOUTS

	Names	Dates
Designed by		
Drawn by	HSD/DOS	9/85
Checked by	JVG/WJR	10/85
F.H.W.A. Approved		12/6/76

Approved By: Deputy Design Engineer, Roadways

Revision No.	Sheet No.	Index No.
86	1 of 2	515

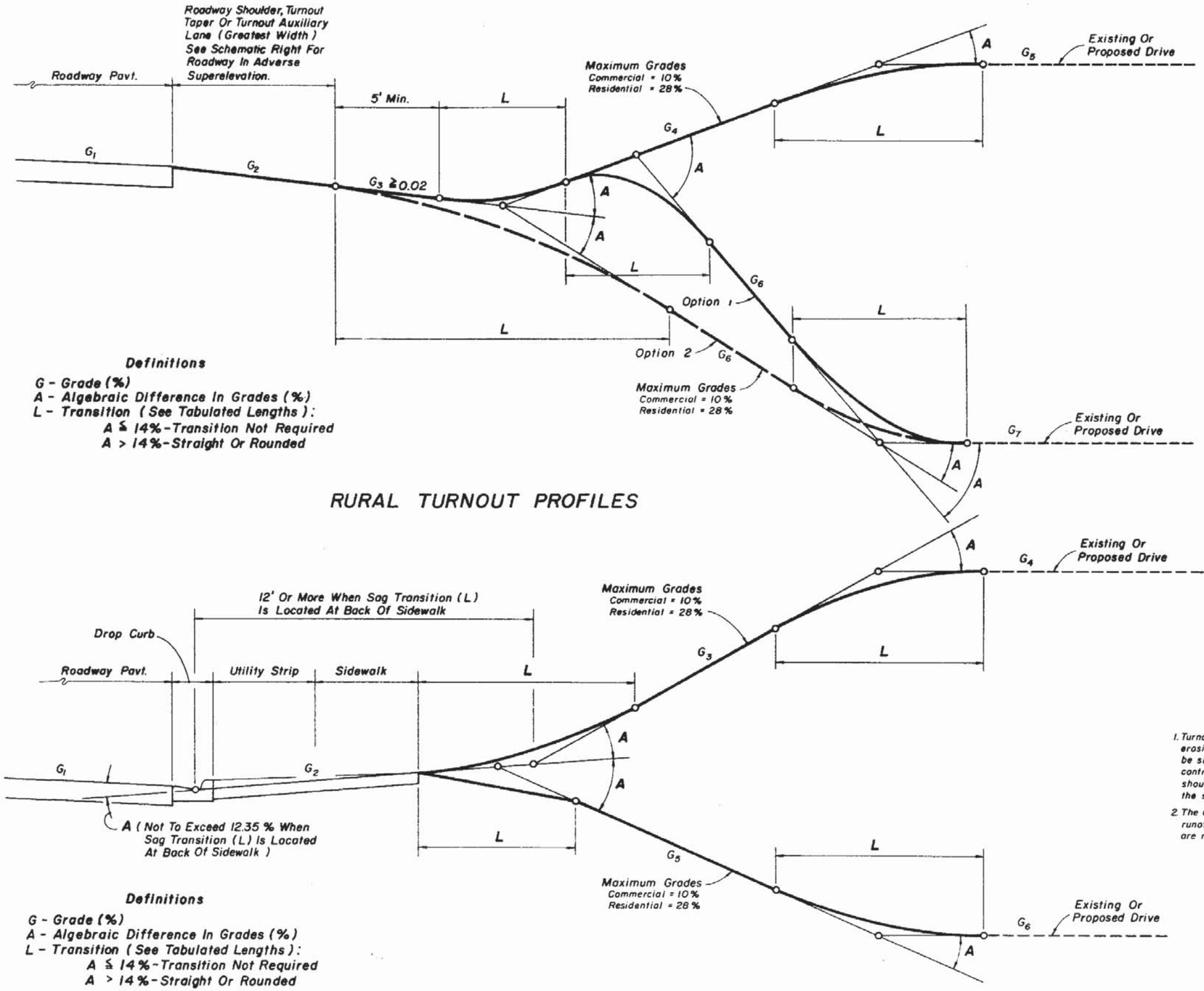

RURAL TURNOUT PROFILES

URBAN TURNOUT PROFILES

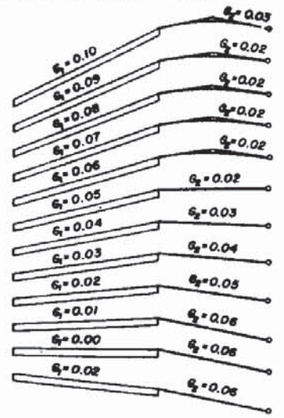

G_2 FOR ADVERSE ROADWAY SUPERELEVATION AND TRANSITIONS

RECOMMENDED TRANSITION LENGTHS (L) (FT.)

A	CRESTS				SAGS			
	STRAIGHT		ROUNDED		STRAIGHT		ROUNDED	
	Desirable	Minimum	Desirable	Minimum	Desirable	Minimum	Desirable	Minimum
6-13%	3	0	5	0	3	0	5	0
14%	3	0	10	0	3	0	10	0
15%	3	2.5	10	3	5	3	10	5
16%	5	3	10	4	6	4	10	6
17%	6	3.5	10	5	8	5	10	7
18%	6	4	10	6	9	6	10	8
19%	7	4.5	10	7	11	7	12	9
20%	8	5	11	8	12	8	13	10
21%	9	5.5	12	9	13	8.5	14	11
22%	10	6	13	10	14	9	16	12
23%	10	6.5	14	10.5	14	9.5	16	12.5
24%	11	7	15	11	15	10	17	13
25%	12	7.5	15	11.5	16	10.5	18	13.5
26%	12	8	16	12	17	11	18	14
27%	13	8.5	17	12.5	17	11.5	19	14.5
28%	14	9	17	13	18	12	20	15

Rounded: Either circular, parabolic or spline curvature. The plans or the Engineer may specify a particular type of curvature.
Desirable: Desirable minimum lengths.
Minimum: Absolute minimum lengths.
} Greater lengths than minimum and desirable are recommended where practical for flatter and smoother profile.

GENERAL PROFILE AND STORMWATER RUNOFF NOTES

1. Turnout construction shall cause no water to flow on or across the roadway pavement, pond on or cause erosion within the state right-of-way. On all rural turnouts the transition (L) nearest the roadway shall be sloped or crowned to direct stormwater runoff to the roadside ditch. Inlets, flumes or other runoff control devices shall be considered when runoff volumes are sufficient to cause erosion of the turnout shoulder. Urban turnouts also may require similar runoff control features to properly direct and control the stormwater runoff.
2. The Option 1 profile is intended for locations where roadway, turnout taper and auxiliary lane stormwater runoff volumes are relatively large. The Option 2 profile is intended for locations where runoff volumes are relatively small and/or where there is no roadside ditch.

STATE OF FLORIDA DEPARTMENT OF TRANSPORTATION
ROAD DESIGN

TURNOUTS

	Names	Dates
Designed by		
Drawn by	HSD	8/82
Checked by	JVG	8/82

Approved By: DC Burnett
State Design Engineer, Roadway

F.H.W.A. Approved: 9/23/82

Revision No.	Sheet No.	Index No.
86	2 of 2	515

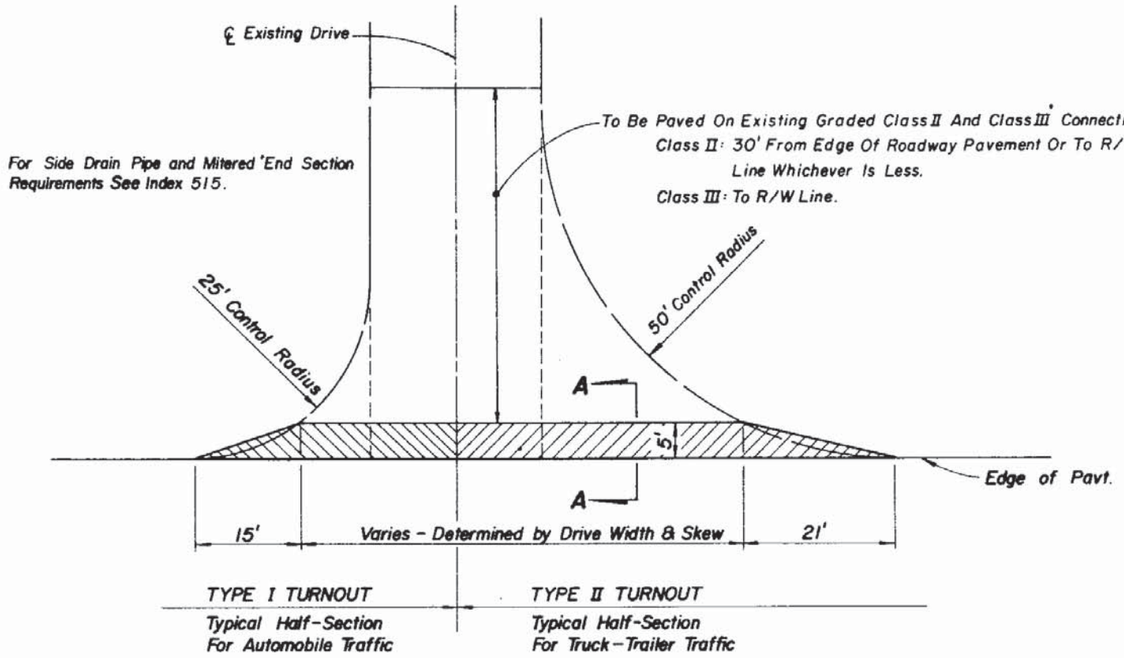

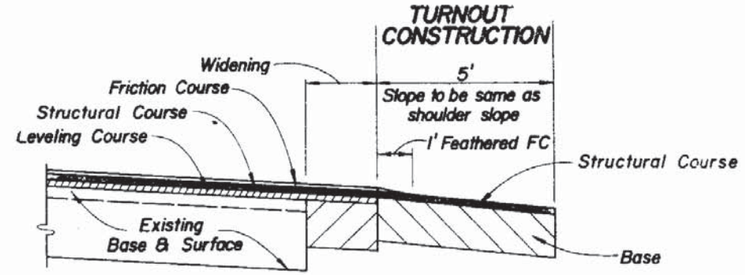

SECTION A-A WITH WIDENING

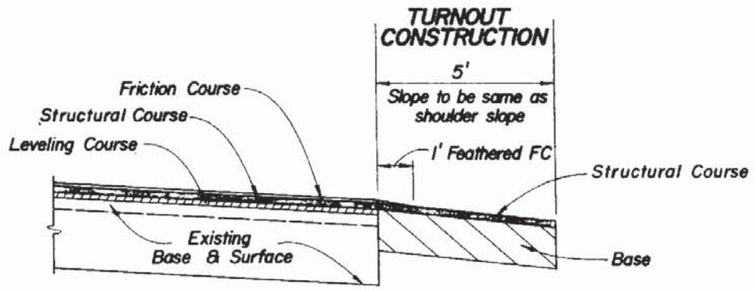

SECTION A-A

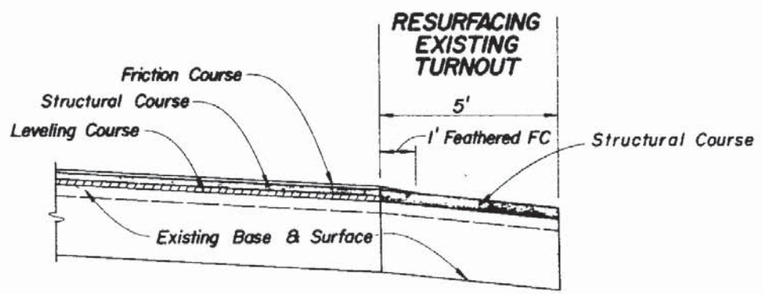

SECTION A-A

QUANTITIES FOR ONE TURNOUT (Sq.Yd.)				
Drive Width (Ft.)	Intersection			
	Normal		Skewed	
	Type I	Type II	Type I	Type II
12	26	51	31	60
14	27	52	33	61
16	28	53	34	63
18	29	54	35	64
20	31	55	37	65
22	32	56	38	67
24	33	57	39	68
26	34	58	40	69
28	35	59	42	70
30	36	61	43	72
32	37	62	44	73
34	38	63	46	74
36	39	64	47	76
38	41	65	48	77
40	42	66	49	78
42	43	67	51	79
44	44	68	52	81
46	45	69	53	82
48	46	71	55	83
50	47	72	56	85
52	48	73	57	86
54	49	74	58	87
56	51	75	60	88
58	52	76	61	90
60	53	77	62	91

TURNOUT PAVEMENT STRUCTURE MINIMUM REQUIREMENTS		
COURSE	MATERIAL	MINIMUM THICKNESS
Structural	Asphaltic Concrete	1"
Base	Limerock LBR 100	4"
	Cemented Coquina	4"
	ABC-1 (Marshall 500)	4"
	ABC-2 (Marshall 750)	4"
	ABC-3 (Marshall 1000)	4"
	Soil Cement (Plant Mix)	4"
	Bank Run Shell	4½"
	Sand-Clay LBR 70	5"
	Shell LBR 70	5"
	Soil Cement (Road Mix)	6"

Notes:
1. Turnout structural course to be the same material as roadway leveling or structural course. Structural course not required if asphalt base course is used.
2. Any Department approved pavement structure equivalence may be used at the discretion of the Engineer.
3. Additional structural strength may be required if high traffic loads are anticipated.

GENERAL NOTES

1. Turnouts are to be constructed or resurfaced at locations as directed by the Engineer.
2. Turnout construction not required with paved shoulders.
3. Connections outside the 5' limit are to be constructed as directed by the Engineer.
4. Contract unit price, Turnout Construction, to include excavation and base.
5. Payment for structural course to be included in roadway resurfacing pay item.
6. Payment for feathering friction course to be included in the unit price for Asphaltic Concrete Friction Course placed on the roadway. Feathered areas will not be included in measured quantities. Feathering not required for FC-2 friction course.
7. For low volume two-lane facilities without a friction course the structural course is replaced by a surface course.

STATE OF FLORIDA DEPARTMENT OF TRANSPORTATION
ROAD DESIGN

TURNOUTS
RESURFACING PROJECTS

	Names	Dates
Designed by	DCB	11/77
Drawn by	HKH	11/77
Checked by	JVG	11/77
F.H.W.A. Approved: 9/23/82		

Approved By
Deputy Design Engineer, Roadways

Revision No.	Sheet No.	Index No.
86	1 of 1	516

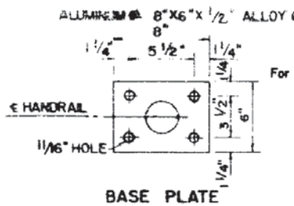

BASE PLATE

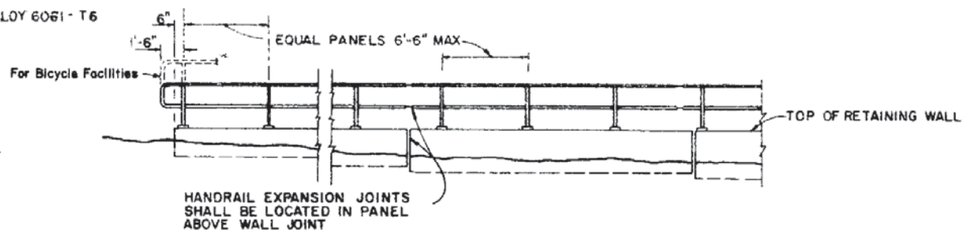

ELEVATION

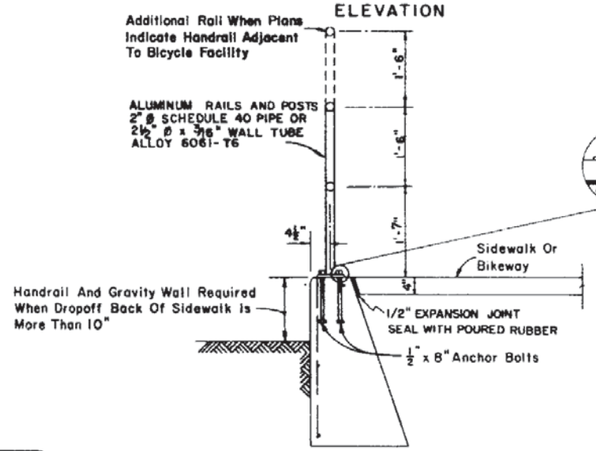

TYPICAL SECTION AT POST

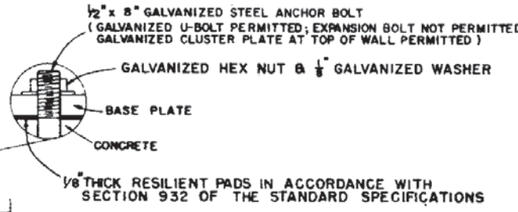

NOTES

1. ALL FIXED JOINTS TO BE EITHER WELDED ALL AROUND AND GROUND SMOOTH OR STANDARD PIPE RAIL FITTINGS AT THE CONTRACTORS OPTION. POSTS SHALL BE CONNECTED TO BASE BY WELD ONLY. WELD FILLER TO BE ALLOY ER5356, ER5556 OR ER5183.
2. NUTS, WASHER, AND BOLTS TO BE HOT DIP GALVANIZED IN CONFORMANCE WITH ASTM A-153. AFTER THE NUTS HAVE BEEN TIGHTENED, THE ANCHOR BOLT THREADS SHALL BE DISTORTED OR THE NUTS AND BOLTS SPOT WELDED AND COATED WITH ZINC COMPOUND.

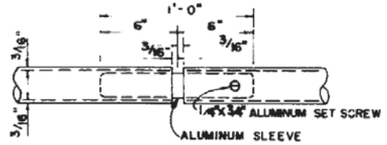

EXPANSION JOINT

ALUMINUM HANDRAIL ON GRAVITY WALL

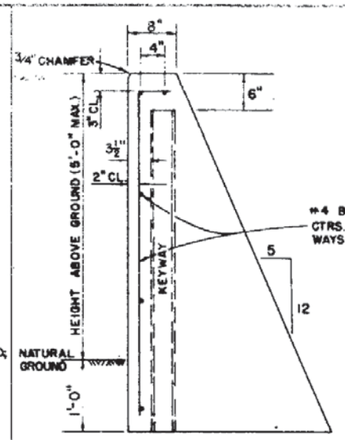

SECTION

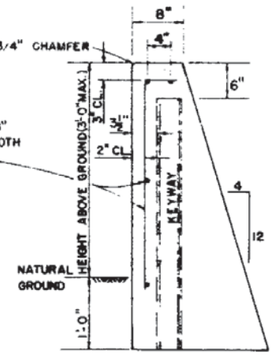

SECTION

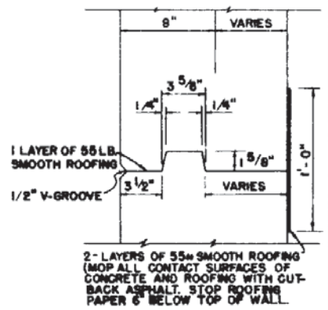

KEY DETAIL

ALL WALL JOINTS TO BE EQUALLY SPACED WITH 30'-0" MAX. CENTERS. KEYWAY TO STOP 6" BELOW TOP OF WALL.

ESTIMATED QUANTITIES FOR WALL		
HEIGHT ABOVE GROUND	PER LINEAR FOOT OF WALL	
	CONCRETE (CY)	STEEL (LB)
2'	.13	4
3'	.20	5
4'	.32	6
5'	.43	7

NOTES

1. Gravity Walls Constructed As Extensions Of Reinforced Concrete Retaining Walls, Except Walls Of Proprietary Designs, Shall Have The Same Face Texture And Finish As The Reinforced Concrete Retaining Wall.
2. Cost Of Reinforcing Steel And Face Texture And Finish To Be Included In The Contract Unit Price For Concrete (Retaining Walls) CY.

GRAVITY WALL

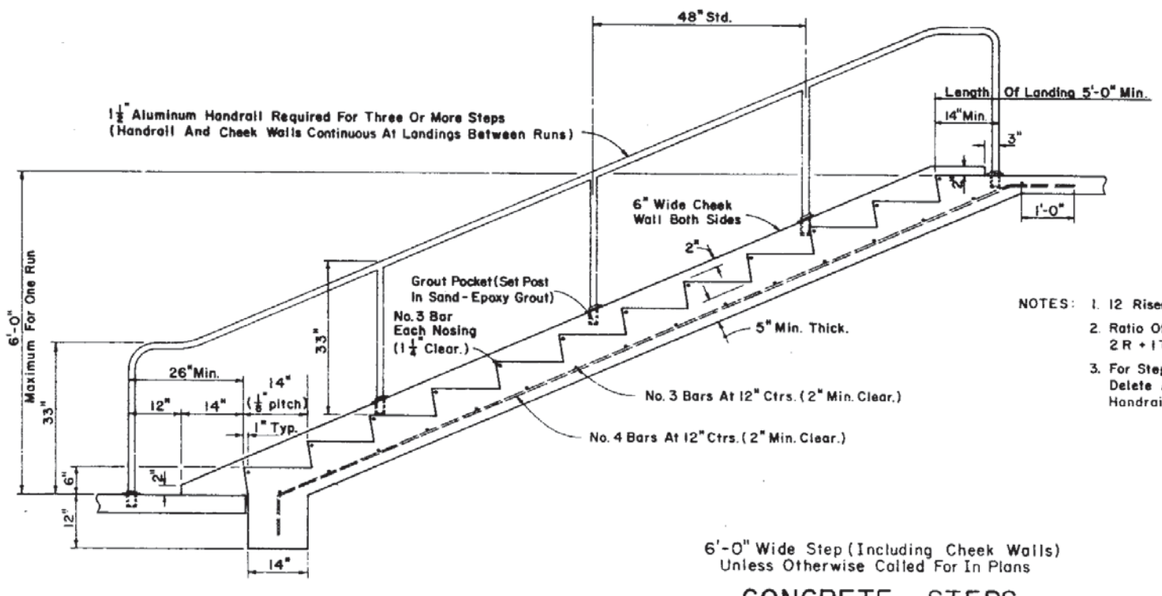

6'-0" Wide Step (Including Cheek Walls) Unless Otherwise Called For In Plans

CONCRETE STEPS

NOTES:
1. 12 Risers Maximum Between Landings.
2. Ratio Of Riser Height To Tread Depth = 2R + 1T = 26" (6" Riser And 14" Tread Shown).
3. For Steps Parallel To And Adjoining Walls, Delete Adjoining Cheek Wall And Mount Handrail To Wall At Height And Length Shown.

STATE OF FLORIDA DEPARTMENT OF TRANSPORTATION
ROAD DESIGN

WALLS, HANDRAILS & STEPS

	Names	Dates
Designed By		
Drawn By	CDR	2/68
Checked By	RHC	2/68
F.H.W.A.	Approved	3/20/75

Approved By: Deputy Design Engineer, Roadways

Revision No.	Sheet No.	Index No.
83	1 of 1	520

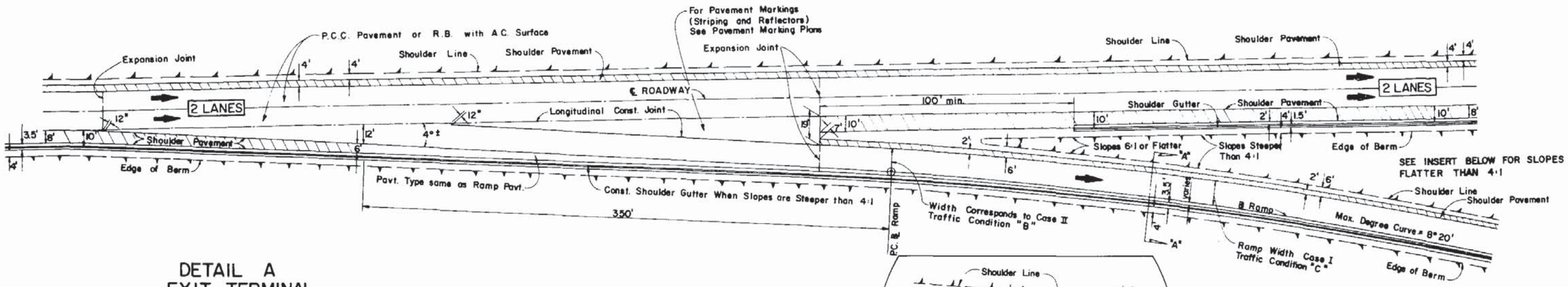

DETAIL A
EXIT TERMINAL
TWO THRU LANES

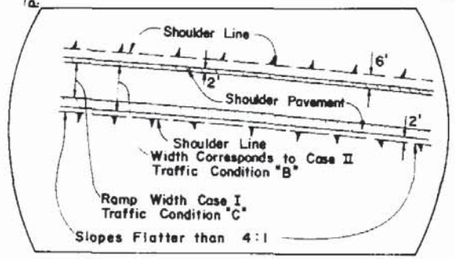

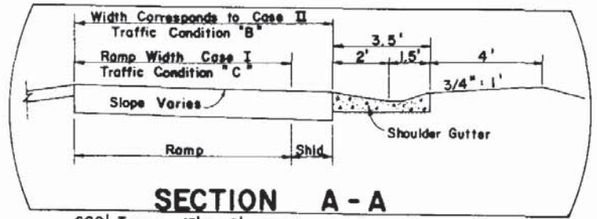

SECTION A-A

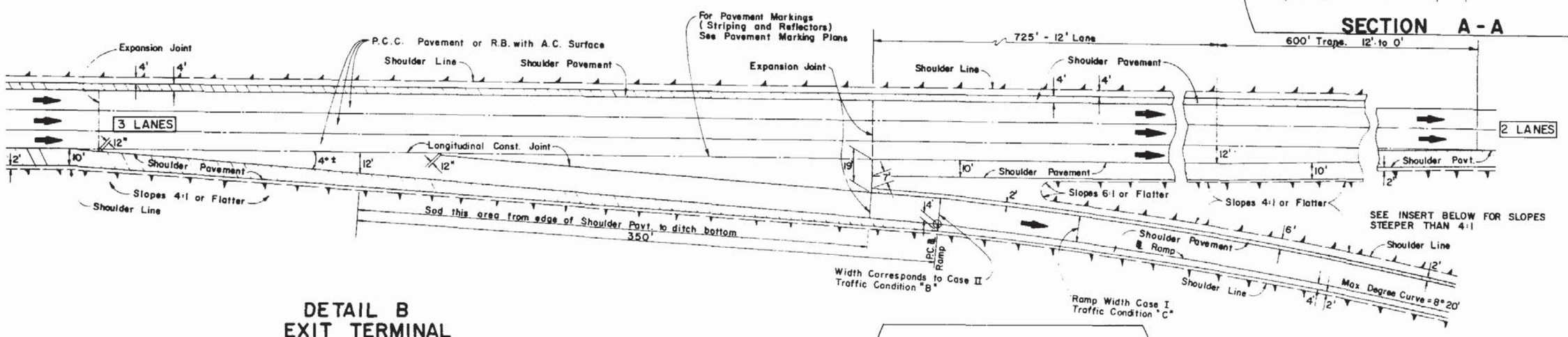

DETAIL B
EXIT TERMINAL
TWO THRU LANES
THREE APPROACH LANES

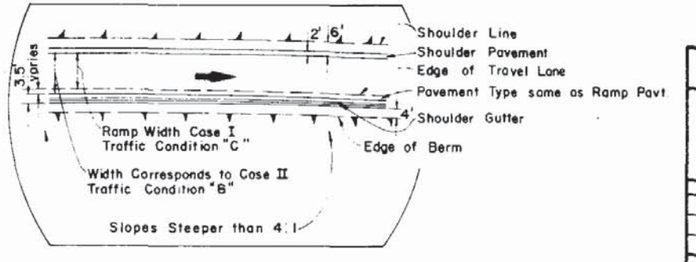

NOTES:
1. FOR GENERAL NOTES SEE SHEET NO. 2

STATE OF FLORIDA DEPARTMENT OF TRANSPORTATION
ROAD DESIGN

RAMP TERMINALS

	Names	Dates
Designed by	EHH	1/65
Drawn by	HFW	1/65
Checked by	RLO	6/67
F.H.W.A. Approved		7/18/75

Approved By
Deputy Design Engineer, Roadways

Revision No.	Sheet No.	Index No.
81	1 of 4	525

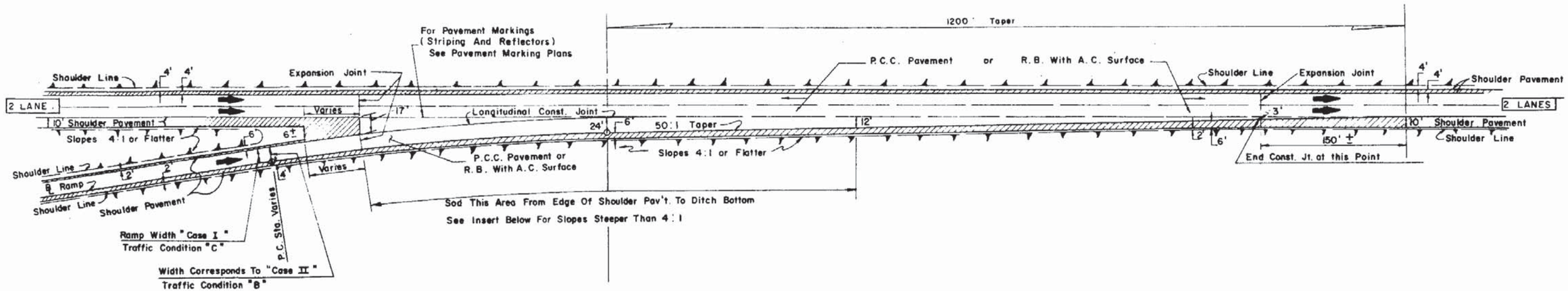

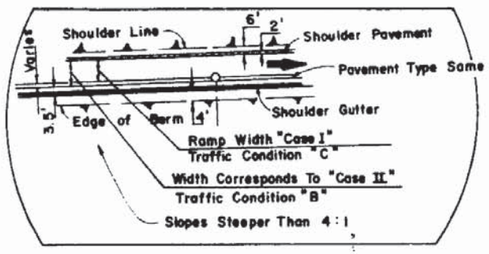

DETAIL C
ENTRANCE TERMINAL
TWO THRU LANES

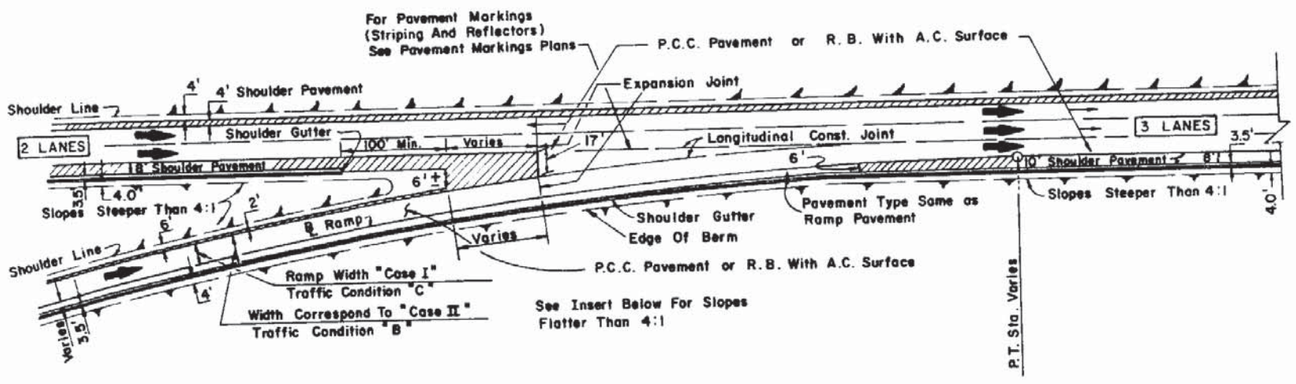

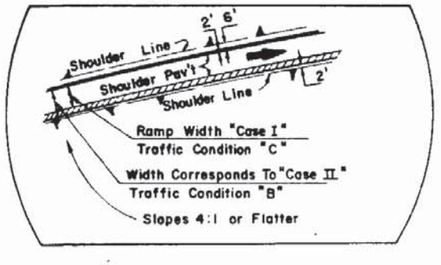

DETAIL D
ENTRANCE TERMINAL
WITH ADDED LANE

GENERAL NOTES

1. The notes applying to P.C.C. Pavement are not applicable to R.B.A.C. Pavement.

2. (a.) P.C.C. Pavement Projects :
   Where shoulder pavement adjacent to shoulder gutter is less than 6' wide, it shall be identical to the adjacent roadway pavement beginning with the transverse joint nearest the point of 6' width.

   (b.) Flexible Base Projects :
   Where shoulder pavement used in conjunction with shoulder gutter is less than 6' uniform width, it shall be identical to the adjacent roadway pavement.

3. Exit and Entrance terminals as detailed shall not be used on ramps for which a speed of 50 M.P.H. or greater cannot be maintained. For such ramps, parallel deceleration and acceleration lanes shall be used in place of tapers with lengths set according to table J-8 & J-10 (1973 A·A·S·H·O·-Red Book).

STATE OF FLORIDA DEPARTMENT OF TRANSPORTATION
ROAD DESIGN

RAMP TERMINALS

	Names	Dates
Designed by	EHH	1/65
Drawn by	HFW	1/65
Checked by	RLO	6/67
F.H.W.A. Approved		7/18/75

Approved By
Deputy Design Engineer, Roadways

Revision No	Sheet No	Index No
81	2 of 4	525

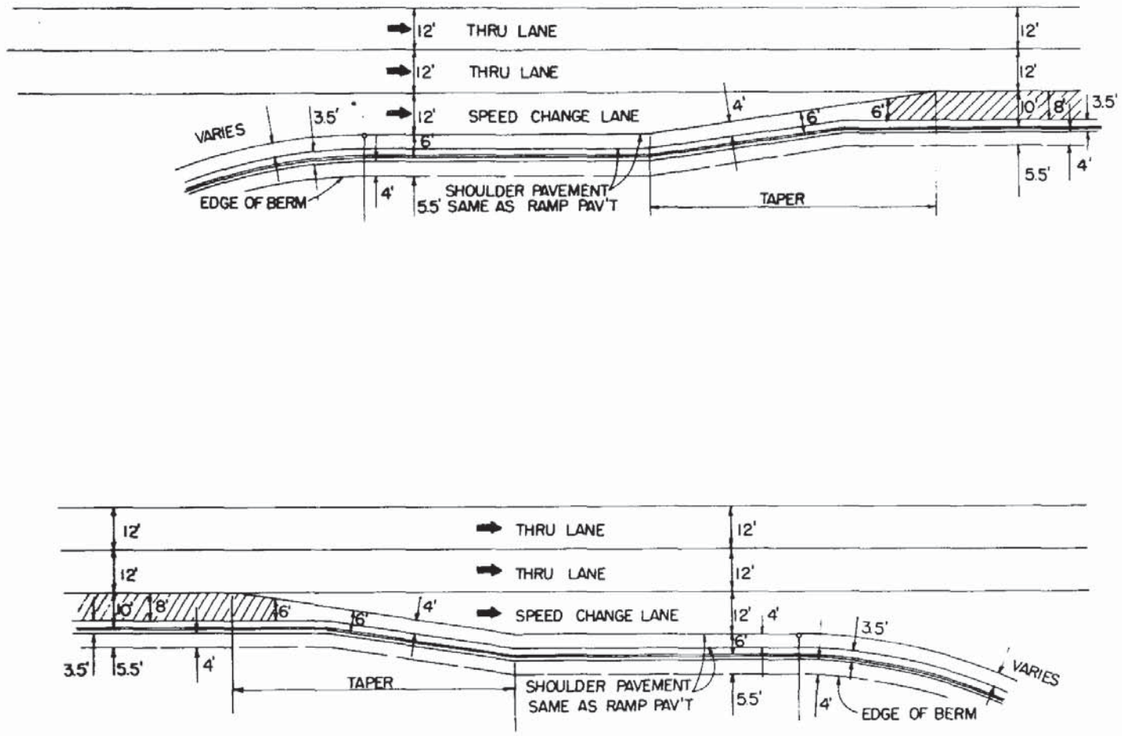

SHOULDER TREATMENT
AT SPEED CHANGE LANES WITH SHOULDER GUTTER

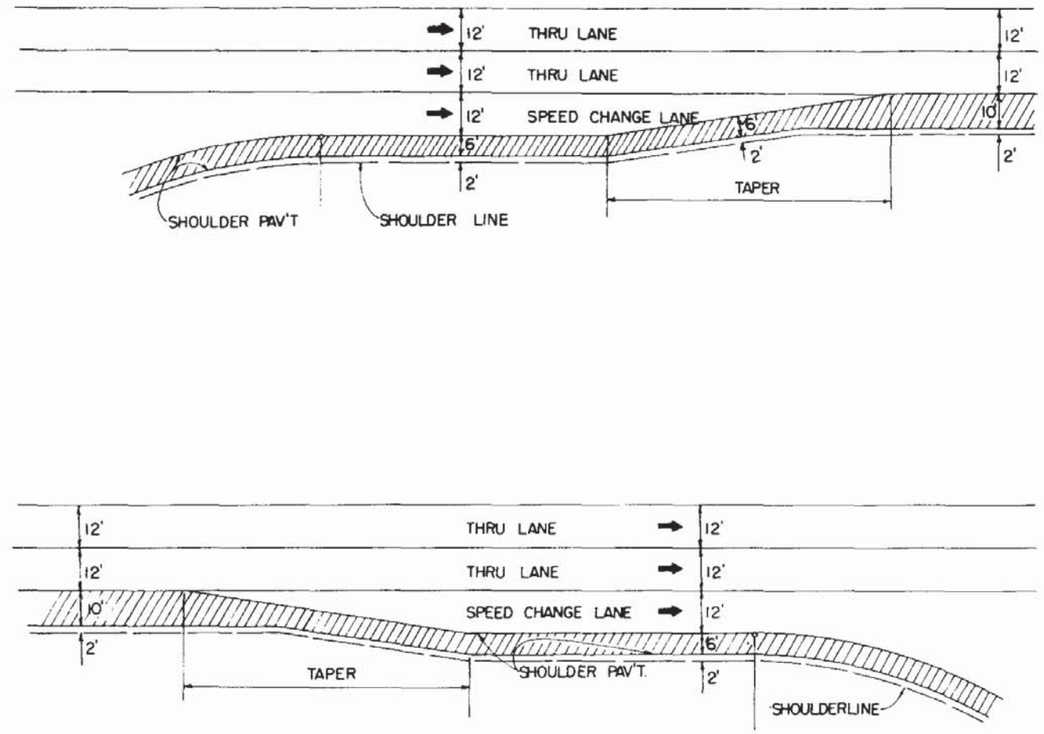

SHOULDER TREATMENT
AT SPEED CHANGE LANES WITHOUT SHOULDER GUTTER

STATE OF FLORIDA DEPARTMENT OF TRANSPORTATION
HEAD DESIGN

RAMP TERMINALS

	EHH	1/65
	HFW	1/65
	RLO	6/67
		7/18/75

Approved by: [signature]

81	3 of 4	525

①

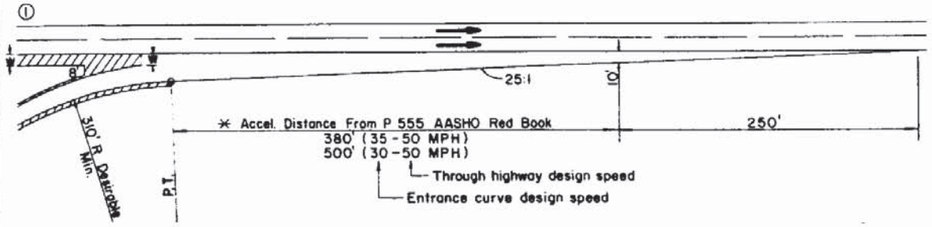

②

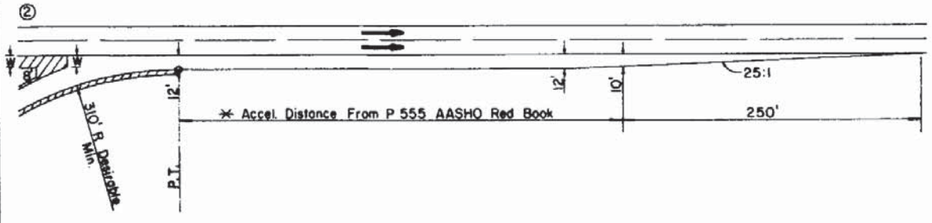

③

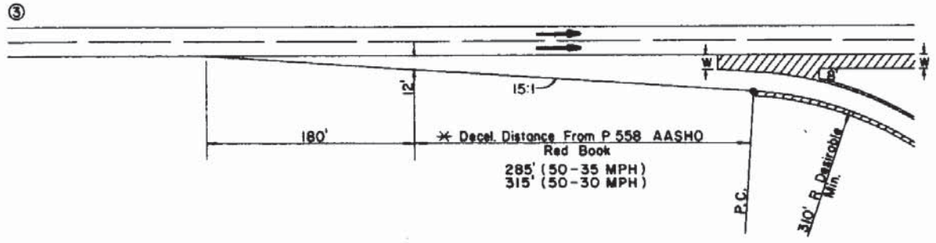

④

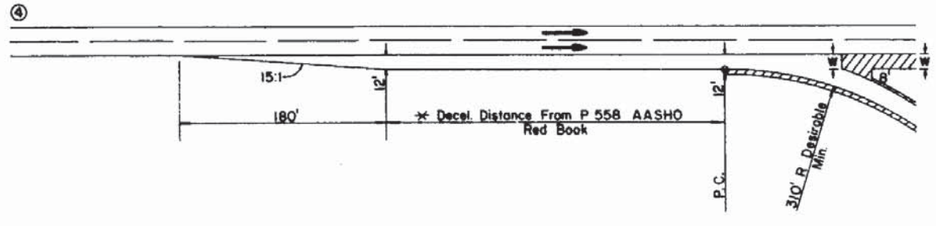

ENTRANCE AND EXIT RAMP TERMINAL
(UNSIGNALIZED)

W Normal shoulder pavement width

* Adjust for grades if greater than 2% (See P 556 AASHO Red Book).

① Standard cross road entrance terminals. To be used when roadway alignment is tangent and no bridges are located within the merging lane.

② Parallel cross road entrance terminals. Recommended when a bridge is located within the merging lane, turning roadway speed is less than 60% of thru roadway speed or for the combinations of horizontal alignment shown elsewhere on this sheet.

③ Standard cross road exit terminal. To be used when roadway alignment is tangent.

④ Parallel cross road exit terminals. Recommended when exit is partially hidden over the crest of vertical curve or when turning roadway speed is less than 60% of the thru roadway speed, or for the combinations of horizontal alignment shown elsewhere on this sheet.

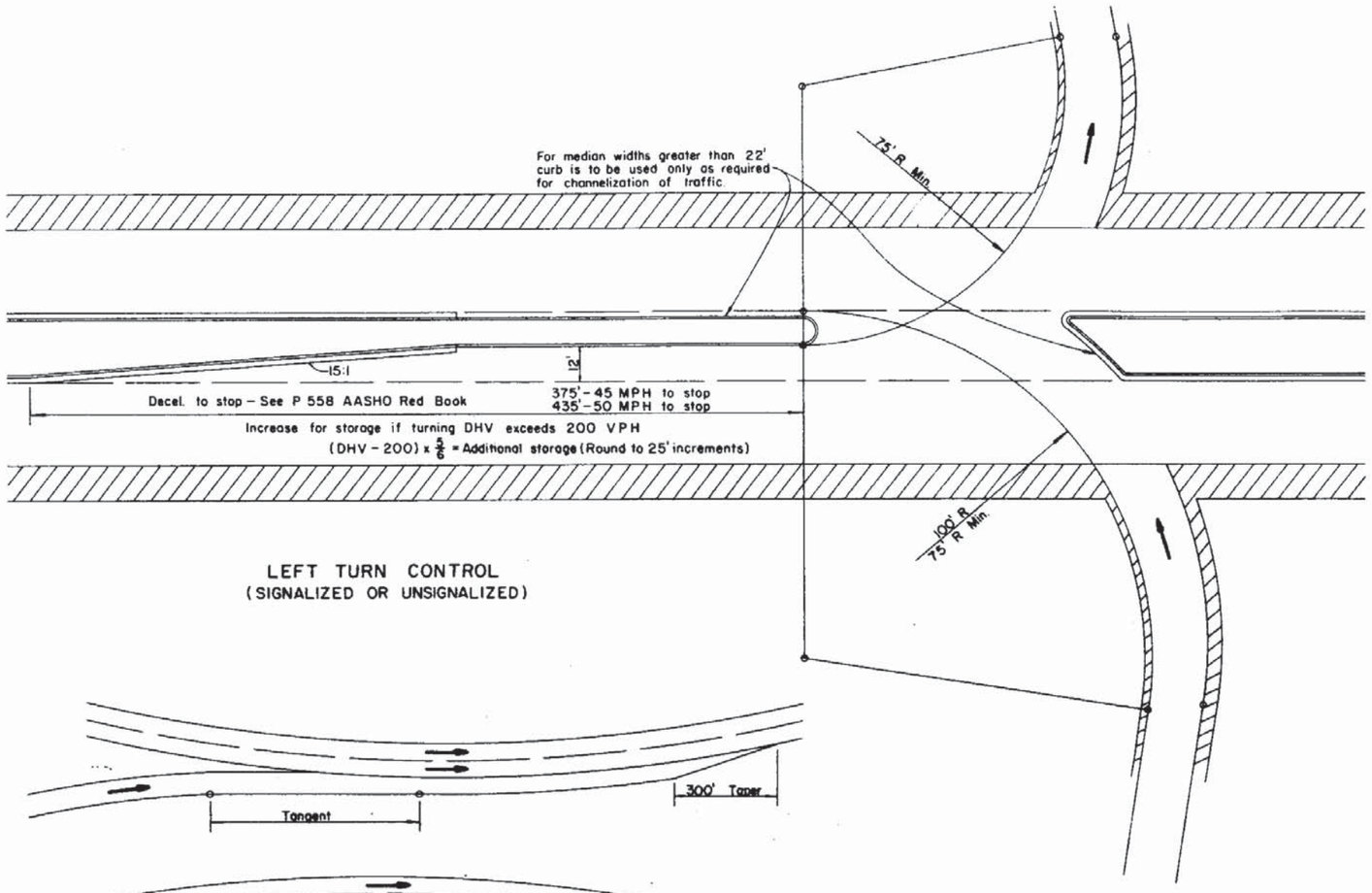

LEFT TURN CONTROL
(SIGNALIZED OR UNSIGNALIZED)

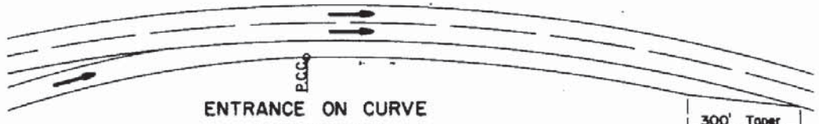

ENTRANCE ON CURVE
(UNSIGNALIZED)
See Drawing ② And Footnote ②



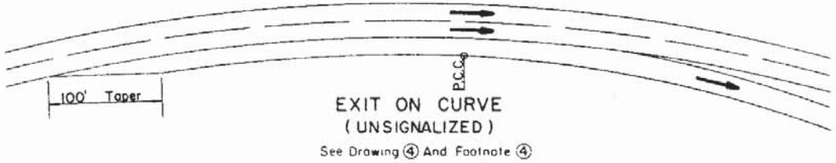

EXIT ON CURVE
(UNSIGNALIZED)
See Drawing ④ And Footnote ④

NOTE: Entrances and exist on curves should be avoided when possible.

THE DETAILS ON THIS SHEET APPLY TO TERMINALS ALONG THE CROSS ROADS

STATE OF FLORIDA DEPARTMENT OF TRANSPORTATION
ROAD DESIGN

RAMP TERMINALS

	Names	Dates
Designed by	EHH	1/65
Drawn by	HFW	1/65
Checked by	RLO	6/67
F - W.A. Approved:		7/25/75

Approved By
Deputy Design Engineer, Roadways

Revision No.	Sheet No.	Index No.
81	4 of 4	525

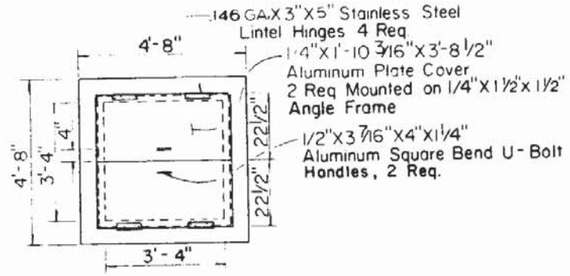

TOP VIEW

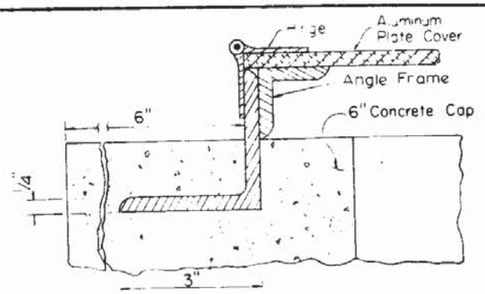

DETAIL
1/4"X3"X3" ANGLE

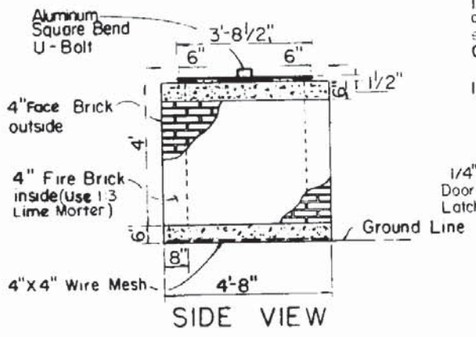

SIDE VIEW

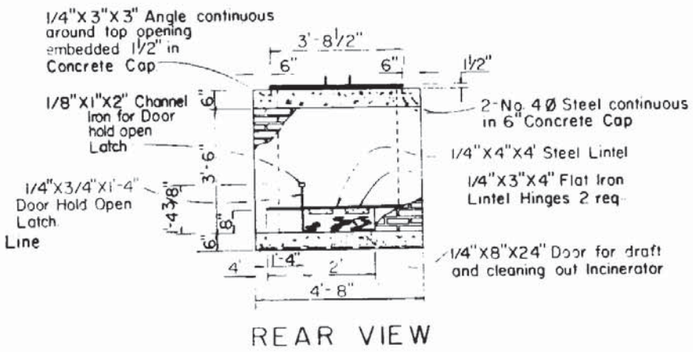

REAR VIEW

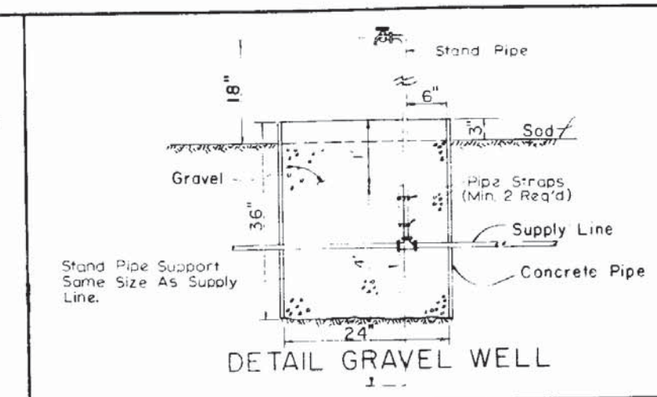

DETAIL GRAVEL WELL

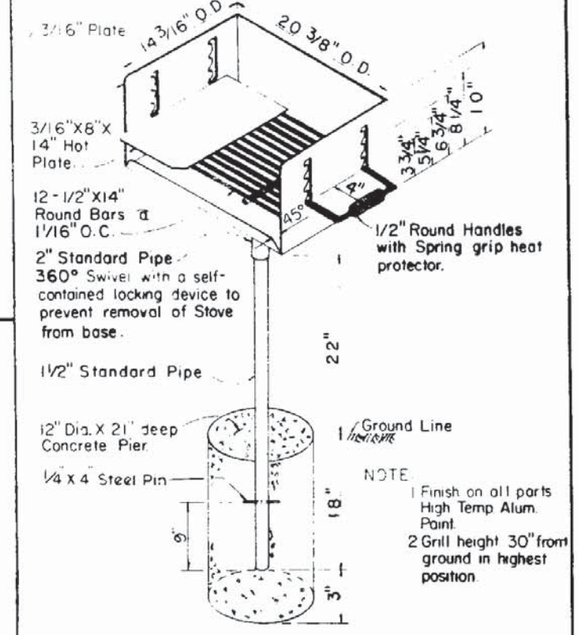

NOTE
1. Finish on all parts High Temp Alum. Paint.
2. Grill height 30" from ground in highest position.

ADJUSTABLE CAMPSTOVE AND GRILL

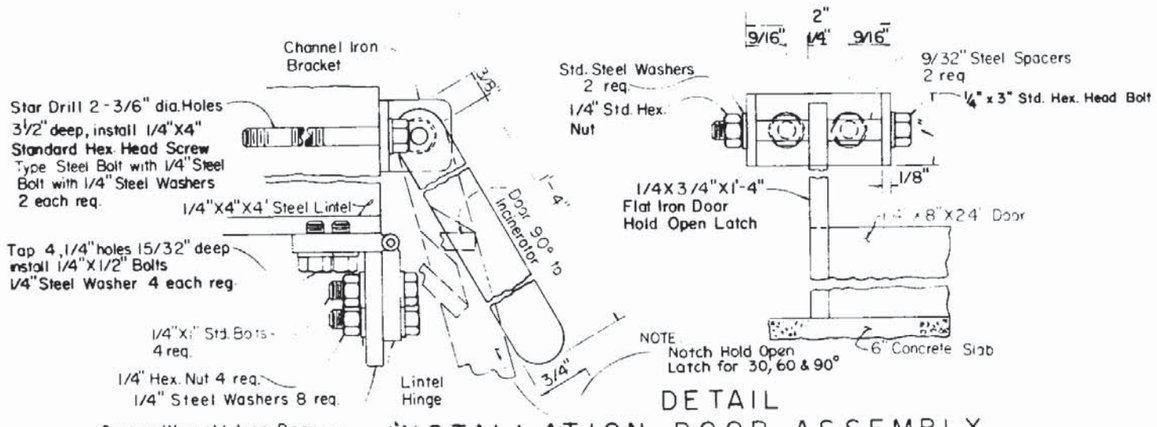

DETAIL
INSTALLATION DOOR ASSEMBLY

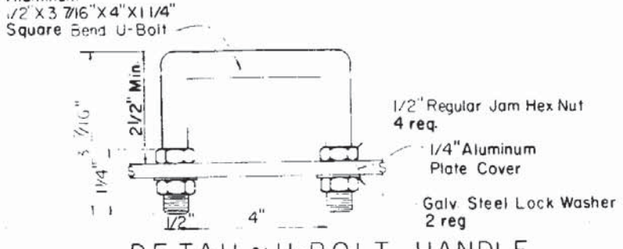

DETAIL~U-BOLT HANDLE

INCINERATOR

GENERAL NOTES

1. For details of chain link fence at rest area locations see Index No. 452.

STATE OF FLORIDA DEPARTMENT OF TRANSPORTATION
ROAD DESIGN

REST AREA EQUIPMENT

	Names	Dates
Designed by		
Drawn by	H.W.	3/68
Checked by	R.H.C.	6/68
F.H.W.A. Approved: 3/20/75		

Approved By: Deputy Design Engineer, Roadways

Revision No.	Sheet No.	Index No.
82	1 of 1	530

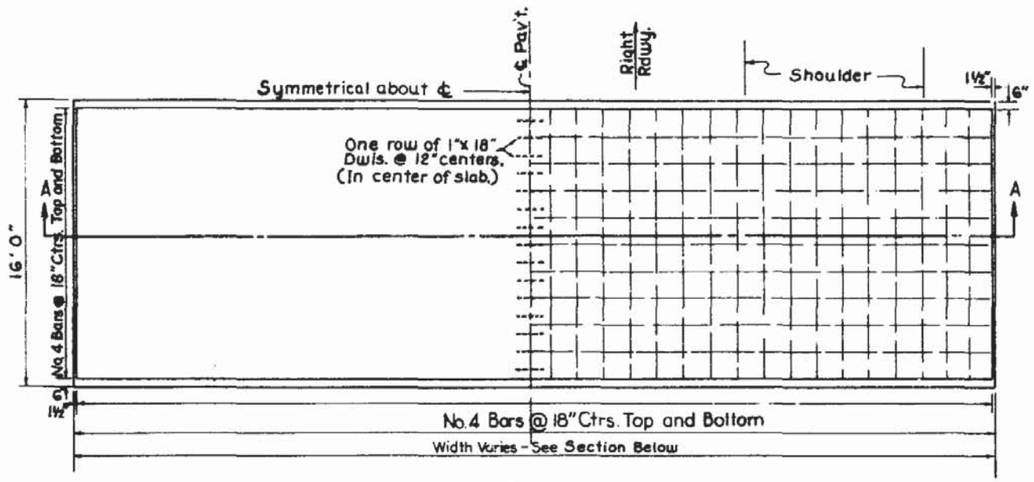

PLAN

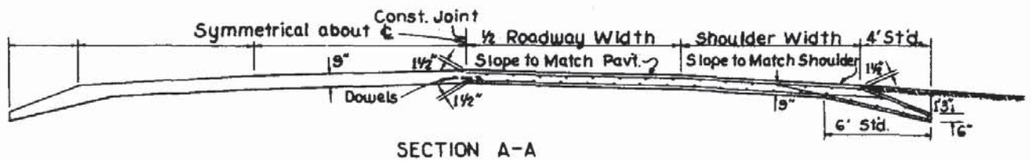

SECTION A-A

TYPE A

REINFORCED CONCRETE

NOTE
CLASS I CONCRETE IS TO BE USED UNLESS OTHERWISE NOTED IN PLANS OR SPECIAL PROVISIONS

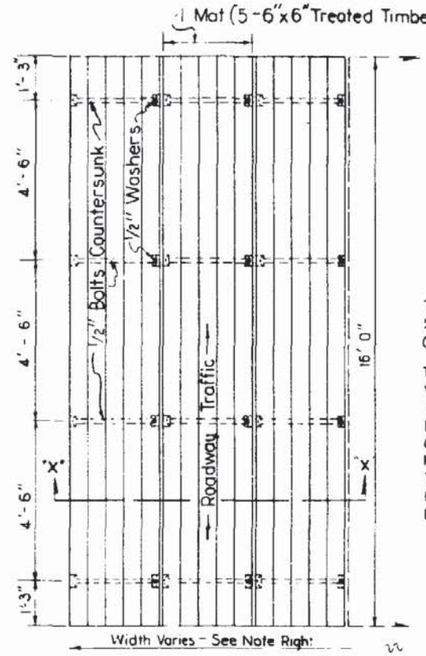

PLAN

NOTE
TRACTOR CROSSING TO BE CONSTRUCTED TO MATCH PAVEMENT CROSS SLOPE.

THE NUMBER OF MATS REQUIRED WILL VARY WITH THE PAVEMENT WIDTH. A SUFFICIENT NUMBER OF MATS WILL BE USED SO THAT THE OVERALL WIDTH OF THE TRACTOR CROSSING WILL BE A MINIMUM OF ONE FOOT GREATER THAN THE PAVEMENT WIDTH. THE TRACTOR CROSSING WILL BE CENTERED ON THE PAVEMENT CENTERLINE.

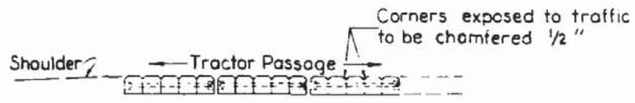

SECTION X-X

TYPE B

TREATED TIMBER

STATE OF FLORIDA DEPARTMENT OF TRANSPORTATION
ROAD DESIGN

TRACTOR CROSSINGS

	Names	Dates
Designed by		
Drawn by	L H	1/61
Checked by	CDD	1/61
F.H.W.A. Approved		3/20/75

Approved By
Deputy Design Engineer, Roadways

Revision No.	Sheet No.	Index No.
81	1 of 1	535

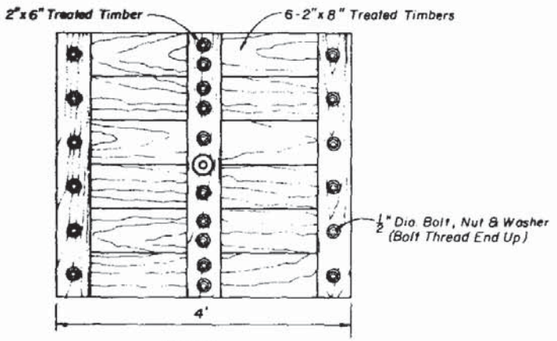

PLAN

TIMBER PLATE

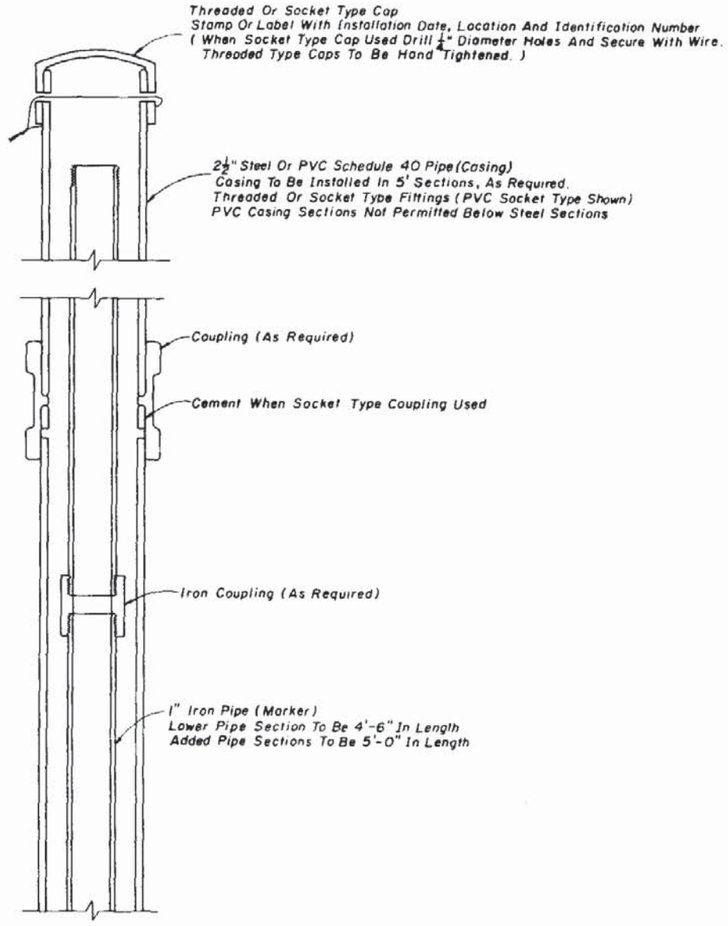

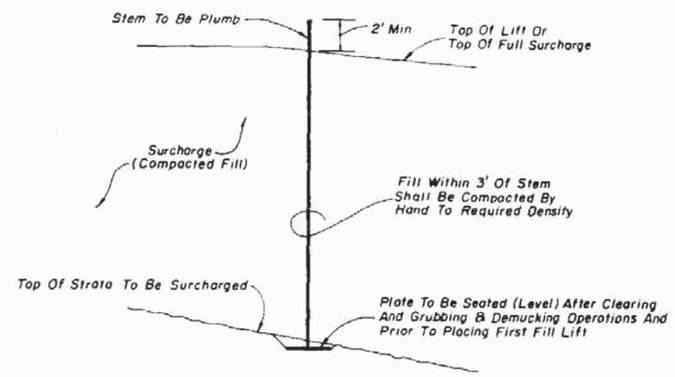

INSTALLATION

NOTES

1. Elevation of the top of each length of marker pipe shall be determined as soon as it is installed and also immediately before the next length of marker pipe is added.
2. Settlement plate locations shall be flagged and protected from construction vehicles and equipment. If settlement plates are disturbed, they shall be replaced in kind.
3. Oakum used to construct seal should not have a mesh covering (plastic or other synthetic material).

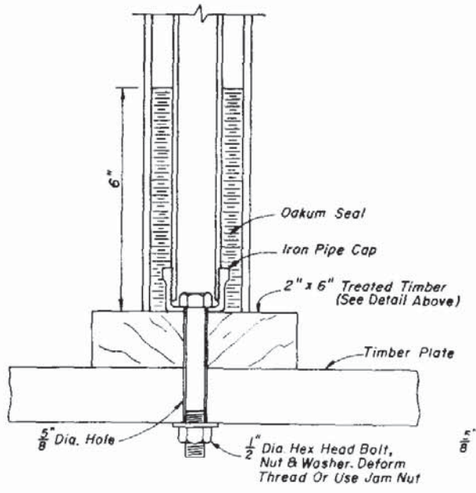

TIMBER PLATE

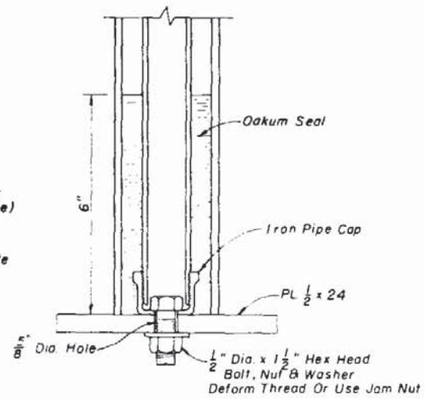

STEEL PLATE

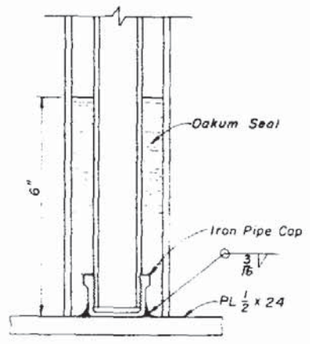

STEEL PLATE

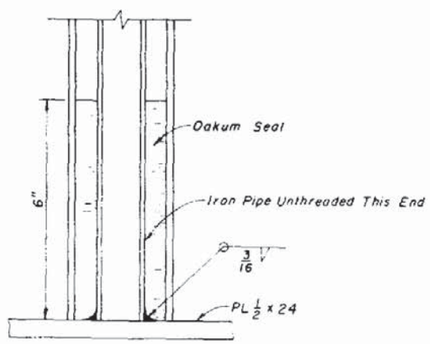

STEEL PLATE

STEM AND PLATE OPTIONS

STATE OF FLORIDA DEPARTMENT OF TRANSPORTATION
ROAD DESIGN

SETTLEMENT PLATE

	Names	Dates
Designed by	J.V.G.	10/79
Drawn by	H.S.D.	10/79
Checked by	J.B.W.	10/79
F.H.W.A. Approved: 10/7/80		

Approved By
Deputy Design Engineer, Roadways

Revision No.	Sheet No.	Index No.
81	1 of 1	540

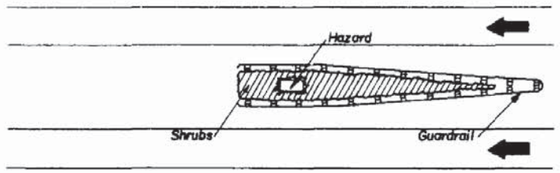

DETAIL A

MEDIAN HAZARD - ONE-WAY TRAFFIC

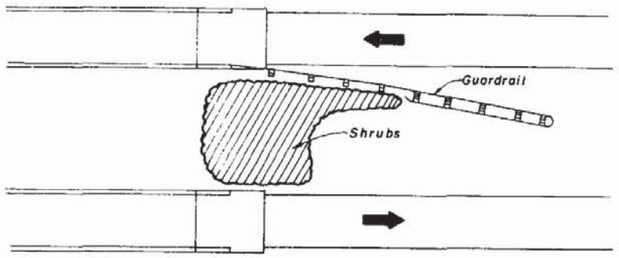

DETAIL C

BRIDGE END - WIDE MEDIAN

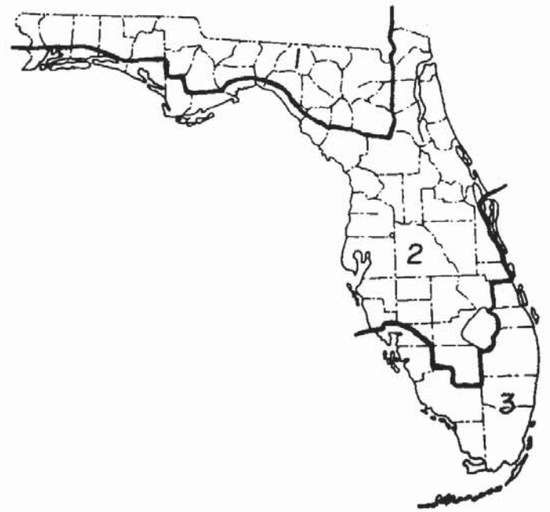

ZONE MAP

ZONE	SHRUB
1.	Wax Myrtle Pampas Grass Primrose Jasmine Russian Olive
2.	Wax Myrtle Pampas Grass Primrose Jasmine Russian Olive Jasmine Simplic Oleander
3.	Pampas Grass Russian Olive Natal Plum Jasmine Simplic Oleander Dwarf Oleander

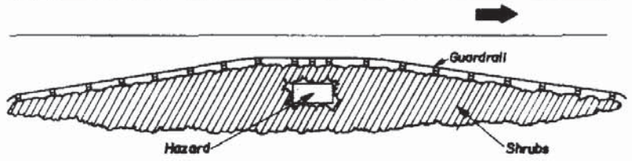

DETAIL B

ROADSIDE HAZARD

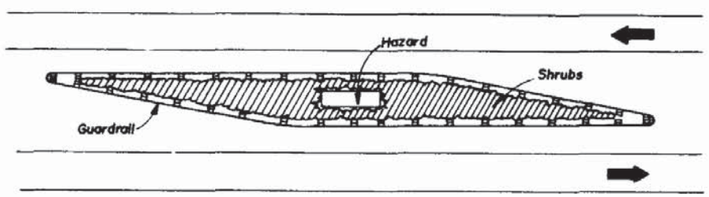

DETAIL D

MEDIAN HAZARD - TWO-WAY TRAFFIC

GENERAL NOTES

1. *The purpose of shrubs in areas back of guardrail is to eliminate hand maintenance in those areas.*
2. *Shrubs are to be planted approximately 5' back from guardrail posts and hazards. Narrow plant areas are to have at least one row of shrubs, as directed by the Engineer.*
3. *Shrubs are to be planted approximately 5' on centers in rows with 5' spacings.*
4. *Shrubs are to be offset in successive rows to create a zig-zag pattern between any two rows.*
5. *Shrubs shall be specified in the plans by Landscape Material Master Pay Item List numbers.*
6. *Only one variety of shrub shall be planted within any given contiguous area and no shrub variety is to be repeated within a distance of one mile.*
7. *When guardrail paving is constructed in conjunction with shrub planting, soil sterilization shall be in accordance with Section 339 of the Standard Specifications.*

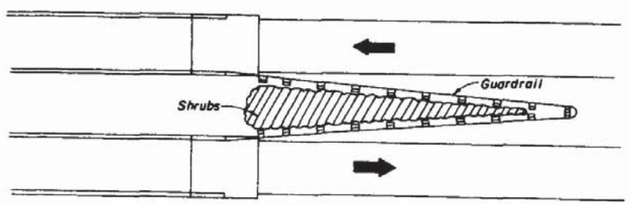

DETAIL E

BRIDGE END-NARROW MEDIAN



CROSS SECTION

BACK TO BACK GUARDRAIL

STATE OF FLORIDA DEPARTMENT OF TRANSPORTATION
ROAD DESIGN

SHRUBBERY
BACK OF GUARDRAIL APPLICATION

	Names	Dates
Designed by:	G.L.N.	
Drawn by:		
Checked by:		
Final Approved:		

Approved By: Deputy Design Engineer, Roadways

Revision No.	Sheet No.	Index No.
80	1 of 1	545

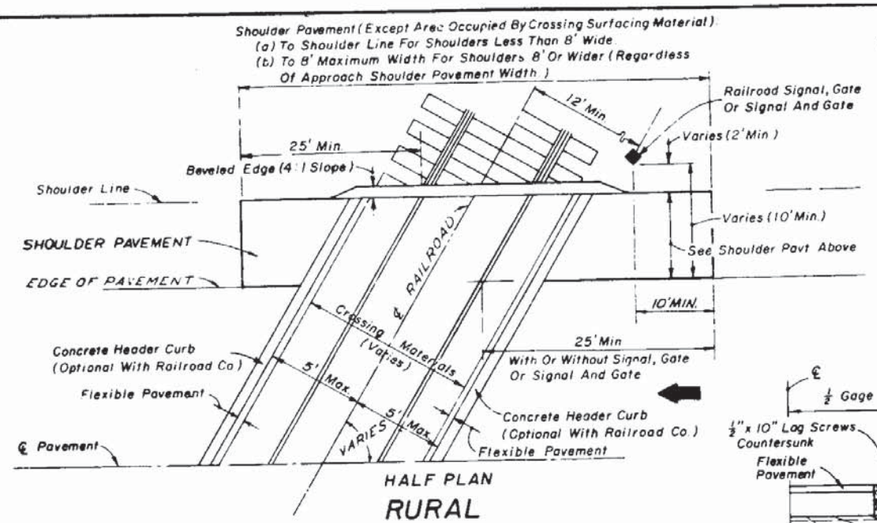

HALF PLAN

RURAL

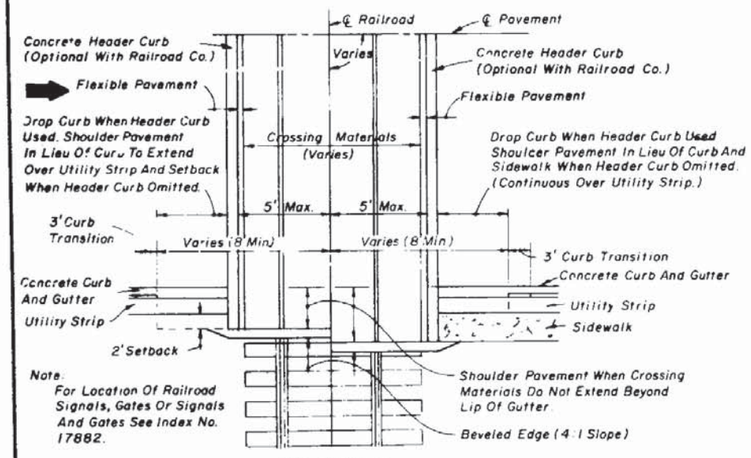

HALF PLAN

MUNICIPAL

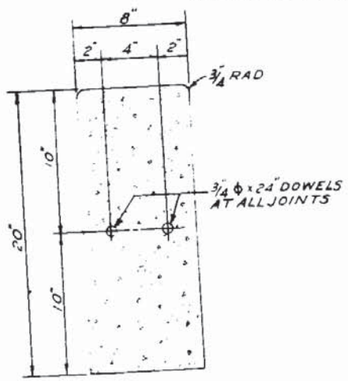

HEADER CURB

(Optional With Railroad Co.)

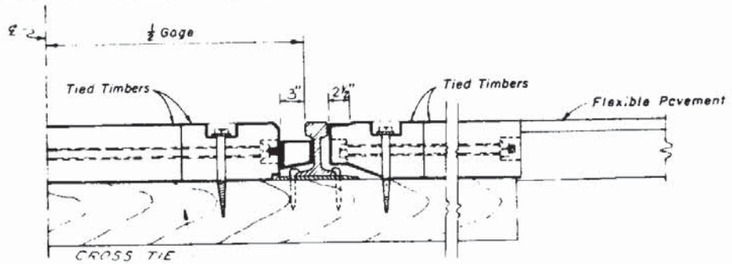

HALF SECTION TYPE "D"

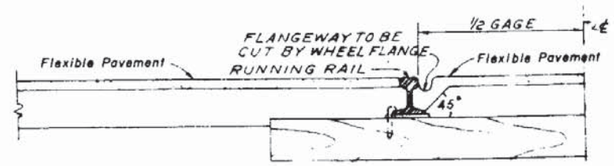

HALF SECTION TYPE "E"

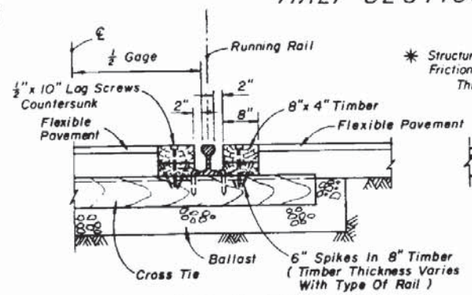

HALF SECTION TYPE G

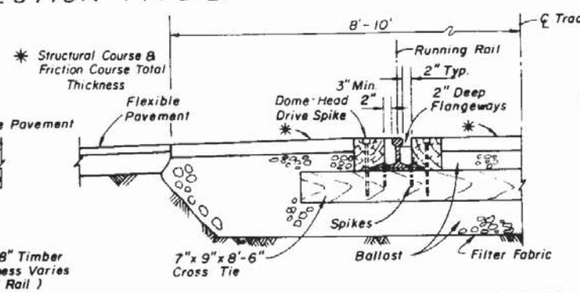

HALF SECTION TYPE G MODIFIED

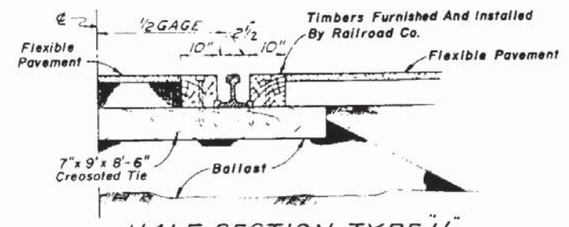

HALF SECTION TYPE "H"

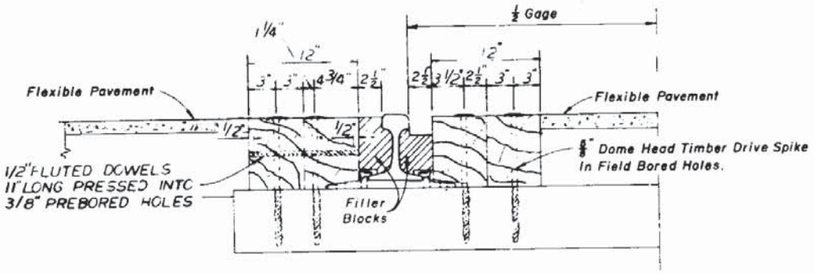

HALF SECTION TYPE "L"

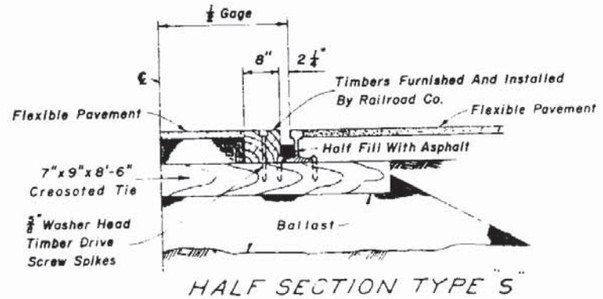

HALF SECTION TYPE "S"

NOTES

1. THE DEPARTMENT WILL CONSTRUCT HEADER CURBS AT LOCATIONS REQUESTED BY THE RAILROAD COMPANY. AND CONSTRUCT PAVEMENT AS SHOWN FOR CROSSING TYPES E,G,H,L AND S.
2. THE RAILROAD COMPANY WILL FURNISH AND INSTALL ALL MATERIAL WITHIN 5' OF ℄ OF TRACKS. EXCEPT PAVEMENT. FOR CROSSING TYPES E,G,H,L AND S.
3. UNLESS OTHERWISE REQUESTED BY THE RAILROAD COMPANY: THE VARIOUS TYPES OF CROSSING WILL BE USED AS FOLLOWS:

	TYPE
APALACHICOLA NORTHERN R.R. CO	L
ATLANTA AND ST. ANDREWS BAY RAILWAY CO	L
FLORIDA EAST COAST RAILWAY CO	T-MOD. & G-MOD.
BURLINGTON NORTHERN RAILROAD	H
SEABOARD SYSTEM RAILROAD	L
NORFOLK SOUTHERN CORPORATION	
(a) GEORGIA SOUTHERN AND FLORIDA RAILWAY CO.	G
(b) LIVE OAK, PERRY AND SOUTH GEORGIA RAILWAY CO.	G
(c) ST. JOHNS RIVER TERMINAL CO	G
(d) GEORGIA AND FLORIDA RAILWAY CO	G
(e) SOUTHERN RAILWAY SYSTEM	G

STATE OF FLORIDA DEPARTMENT OF TRANSPORTATION
ROAD DESIGN

RAILROAD CROSSINGS
TYPE D, E, G, G-Mod., L & S

	Name	Date
Designed By		
Drawn By	H.W.	8/69
Checked By	J.K.C.	8/69
F.H.W.A. Approved		3/20/75

Approved By: Deputy Design Engineer, Roadways

Revision No.	Sheet No.	Index No.
85	1 of 8	560

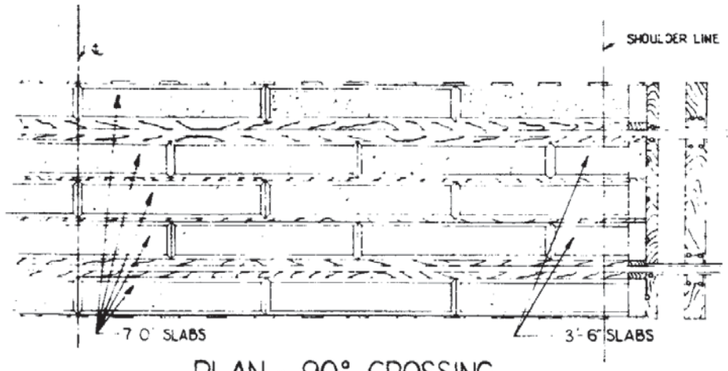

PLAN - 90° CROSSING

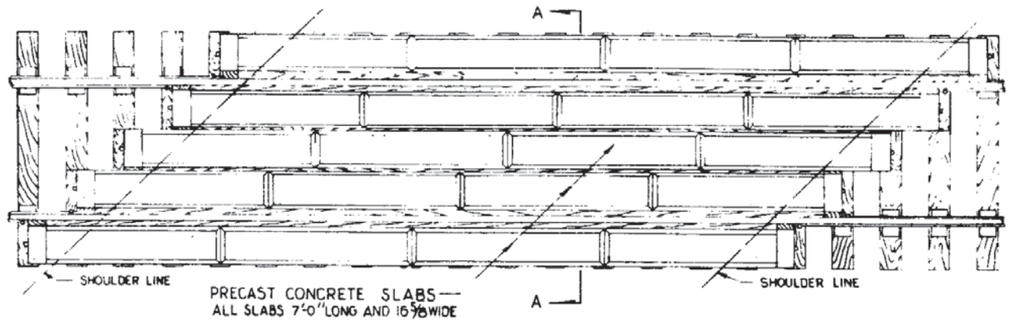

PLAN - SKEW CROSSING

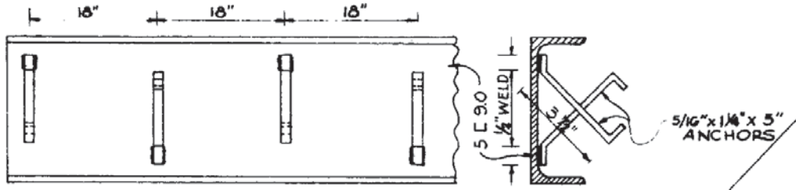

ELEVATION

SECTION

DETAIL OF 5/16"x1¼"x5" ANCHORS
ANCHORS STAGGERED 18" C. TO C.
TWO ANCHORS EACH END CHANNEL
NOTE: ½"x5" STUDS MAY BE USED
IN LIEU OF ANCHORS.

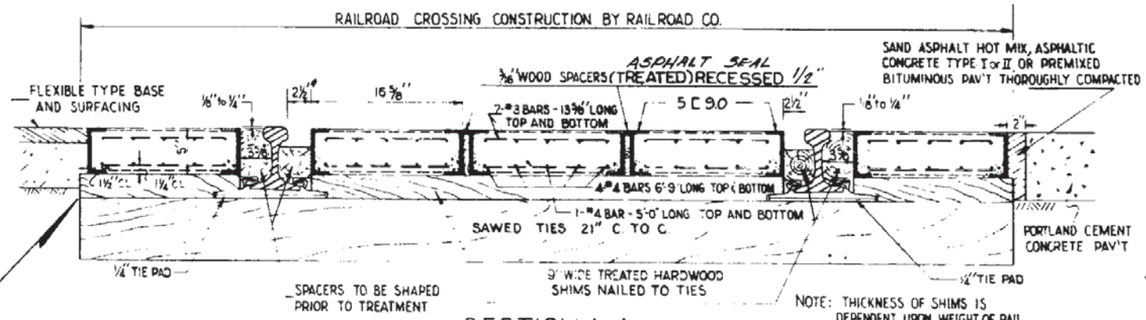

SECTION A-A

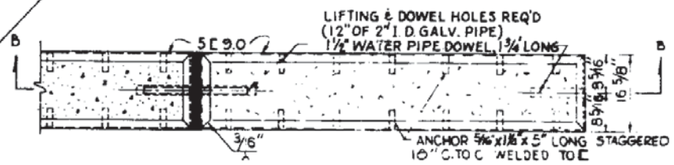

PLAN TYPICAL SLAB

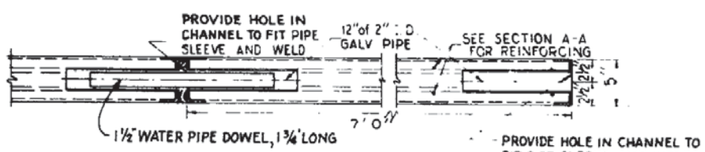

SECTION B-B

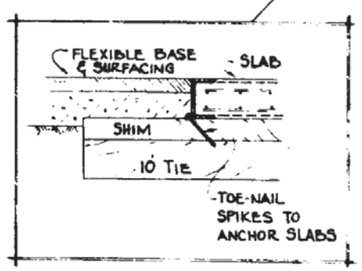

OPTIONAL DETAIL
WHEN 10' TIES ARE USED

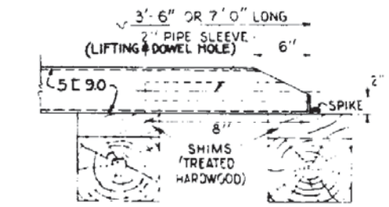

BEVELED END SECTION

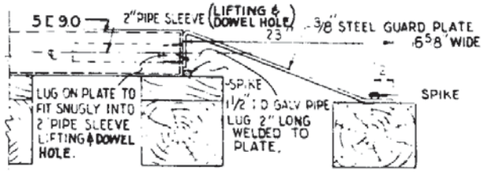

ALTERNATE END SECTION

NOTES

1. SPACERS ADJACENT TO RAIL TO BE DENSE STRUCTURAL 65 GRADE.
2. SPACERS BETWEEN SLABS TO BE №1 COMMON GRADE.
3. ALL TIMBER TO BE SHAPED PRIOR TO TREATMENT.
4. CLASS I CONCRETE TO BE USED IN THE CONSTRUCTION OF THE PRECAST CONCRETE SLABS.
5. ALL TIMBER SHIMS AND SPACERS AND PRECAST CONCRETE SLABS WILL BE FURNISHED AND INSTALLED BY THE RAILROAD CO. THE TRACK SHALL BE CONDITIONED TRUE TO LINE AND GRADE BY THE RAILROAD CO. PRIOR TO INSTALLATION OF THE CROSSING ELEMENTS.
6. CONSTRUCTION OF THIS CROSSING REQUIRES A STABLE SUBGRADE FOR A MINIMUM OF 2' BELOW THE BOTTOM OF THE BALLAST. THE SUBGRADE SHALL BE CONSTRUCTED TO THE SAME REQUIREMENTS AS SPECIFIED FOR THE ADJOINING ROADWAY.

STATE OF FLORIDA DEPARTMENT OF TRANSPORTATION
ROAD DESIGN

RAILROAD CROSSINGS TYPE J

	Names	Dates
Designed by		
Drawn by	HW	8/69
Checked by	JKC	8/69
F.H.W.A.	Approved	3/20/75

Approved By
Deputy Design Engineer, Roadways

Revision No.	Sheet No.	Index No.
83	2 of 8	560

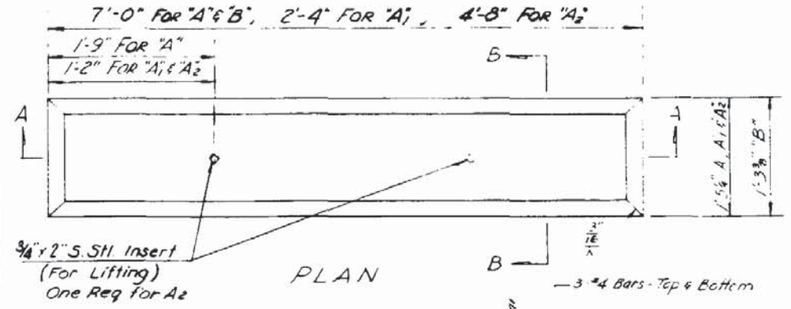

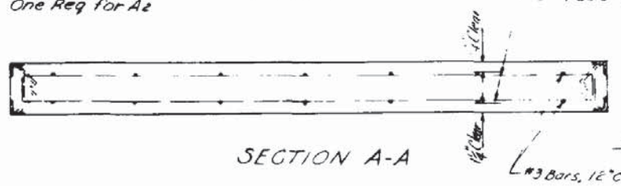

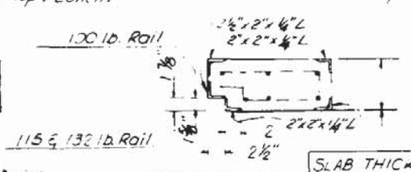

TYPE "A", "A1" & "A2" SLABS

SLAB	THICKNESS	VARIES
A	5 3/4"	For 90 lb Rail
A1 & A2	6 3/8"	For 115 lb Rail
A1 & A2	7 1/8"	For 132 lb Rail

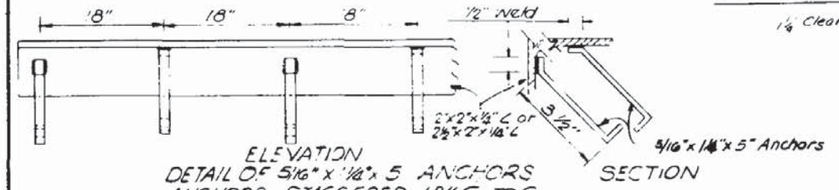

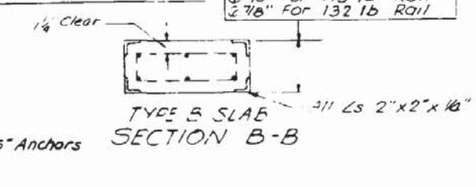

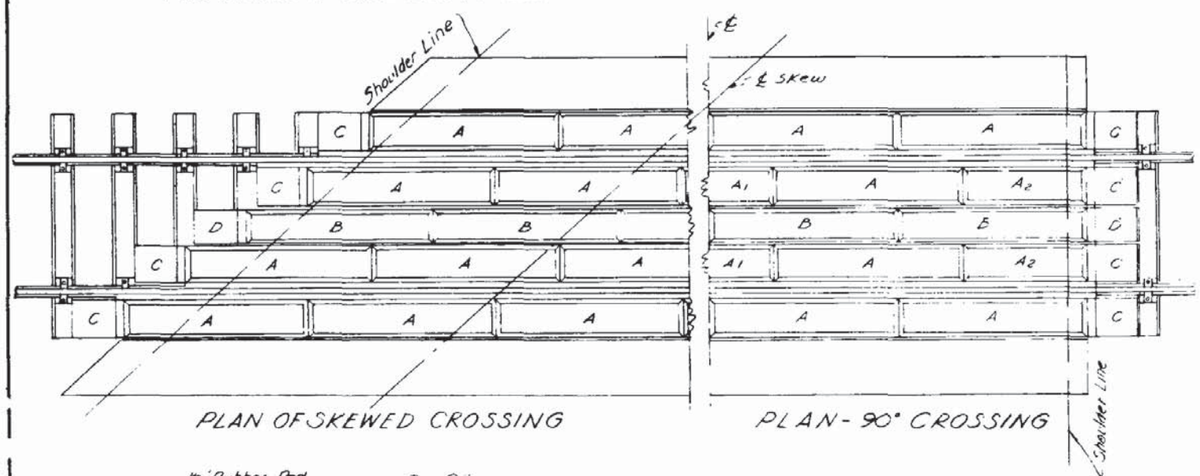

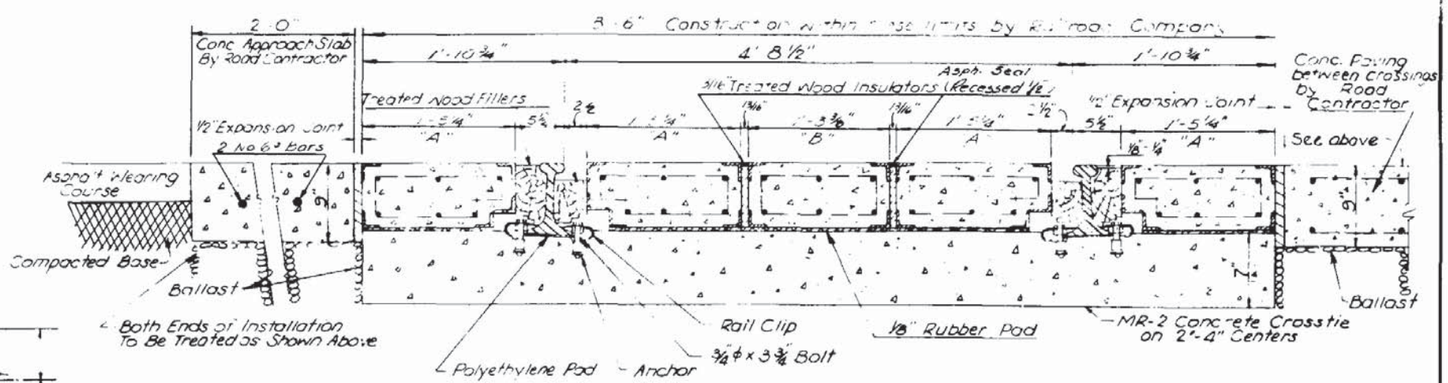

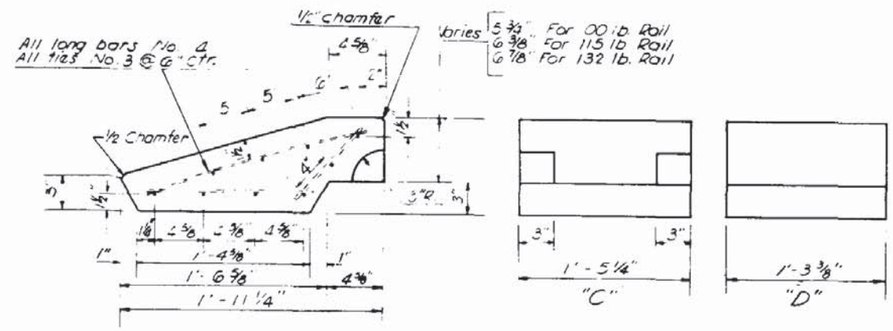

TYPES "C" & "D" SLAB DETAILS

GENERAL NOTES

1. The furnishing and installing of concrete crossties together with any necessary reballasting, grade adjustment and track alignment shall be done by the Railroad Company without cost to the Contractor or to the Department.
2. All concrete slabs, rubber pads for tops of ties and wood filler blocks shall be furnished and installed by the Railroad Company.
3. Concrete Crossties shall be spaced on 28" centers by the Railroad Company.
4. Rubber pads shall be installed on concrete ties in field using contact cement.
5. Filler blocks shall be pressure treated pine or clear heart redwood and shall be shaped prior to treatment.
6. Class I Concrete 9" thick to be used in construction, by road contractor, of Concrete Approach Slabs and for paving between crossings (Cost of steel to be included in cost of Class I Concrete.)

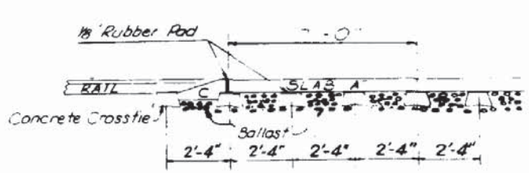

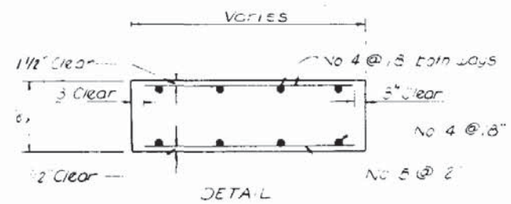

Reinforcing for Concrete Paving between Parallel Track Crossings
(Cost of Reinforcing to be included in cost of Class I Concrete, see note No 6)

STATE OF FLORIDA DEPARTMENT OF TRANSPORTATION
ROAD DESIGN

RAILROAD CROSSINGS TYPE K

	Names	Dates
Designed by		
Drawn by	H.W.	8/69
Checked by	J.K.C.	8/69
F.H.W.A. Approved		3/20/75

Approved By
Deputy Design Engineer, Roadways

Revision No.	Sheet No.	Index No.
83	3 of 8	560

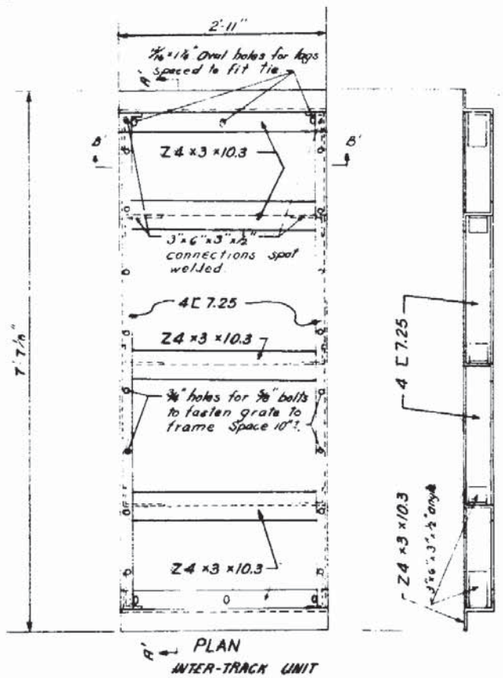

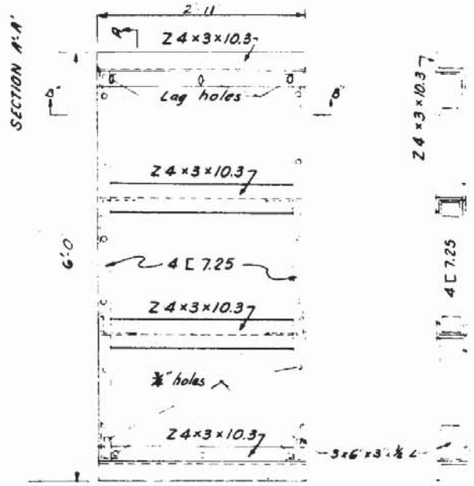

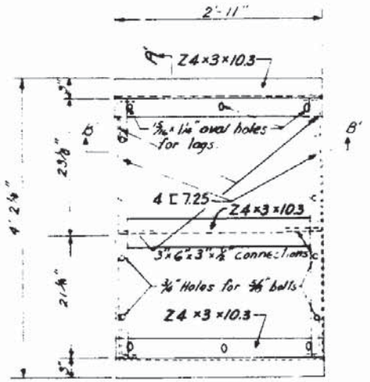

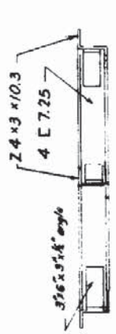

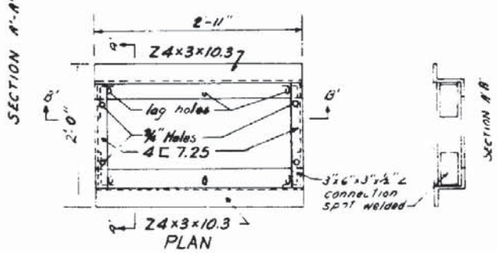

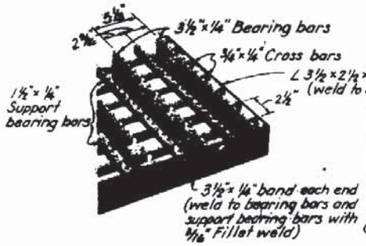

DECKING (14.81 Lbs/S.F.)

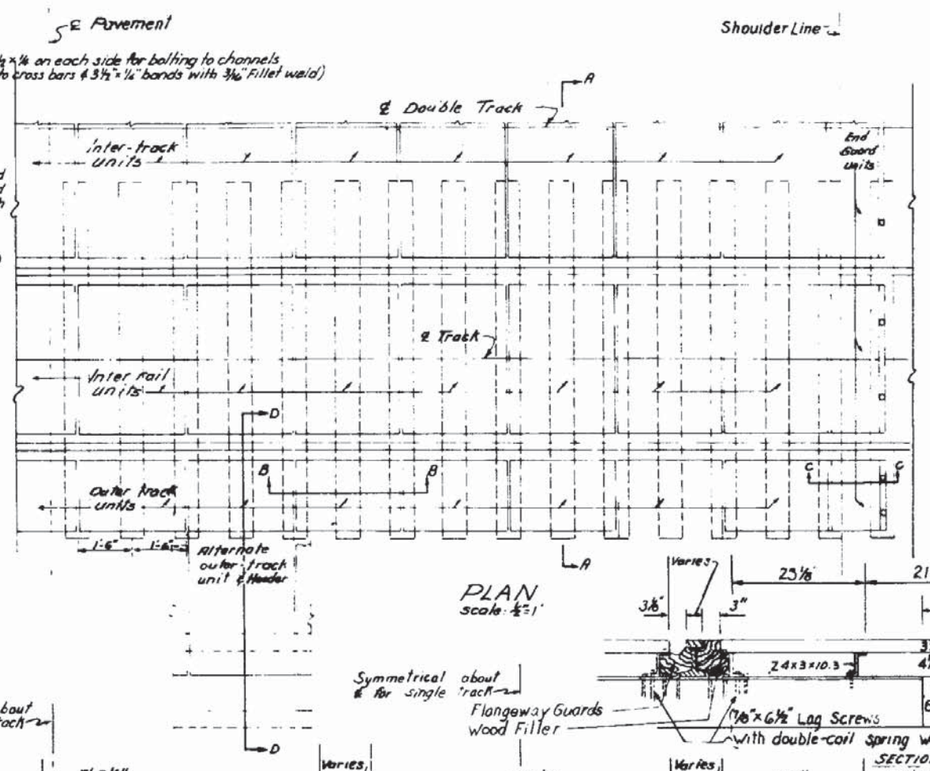

Symmetrical about ℄ for single track

Symmetrical about ℄ for double Track

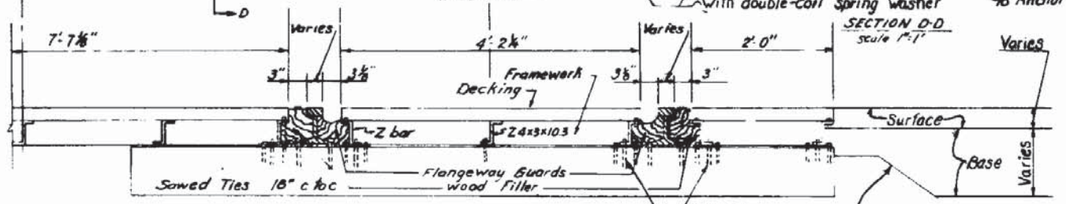

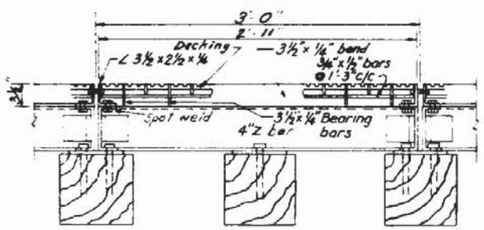

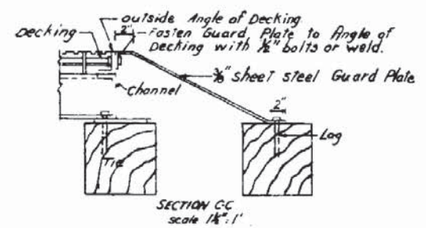

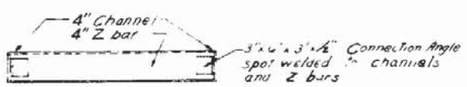

FRAME DETAILS
Scale 1"=1'

GENERAL NOTES

1. This drawing is based on using 131# rail on a tangent section and Decking fabricated in sections to fit the corresponding sections of the supporting frame. The depth of the Z bars and channels may be varied to fit other rail sections.
2. The framework units are attached to ties by 7/8"x 6 1/2" lag screws, and to Headwall by 5/8" anchor bolts. Double-coil spring washers are used with lags to compensate for vertical motion.
3. The decking is attached to the framework with 5/8" bolts. The head of the bolt is to be spot welded to the under-side of the channel flange.
4. Flangeway and outside filler timbers to be rabbetted to assure close fit prior to treatment.
5. Ties to be sawed and spaced 18" C to C.
6. Crossing of any angle can be equiped with units of either 45°, 67°30' or 90°
7. Decking may be as shown or equal (Submit shop drawings for approval by the Engineer).

STATE OF FLORIDA DEPARTMENT OF TRANSPORTATION
ROAD DESIGN

RAILROAD CROSSINGS TYPE M

	Names	Dates
Designed by		
Drawn by	M W	8/69
Checked by	J K C	8/69
F.H.W.A. Approved:		3/20/75

Approved By
Deputy Design Engineer, Roadways

Revision No.	Sheet No.	Index No.
83	4 of 8	560

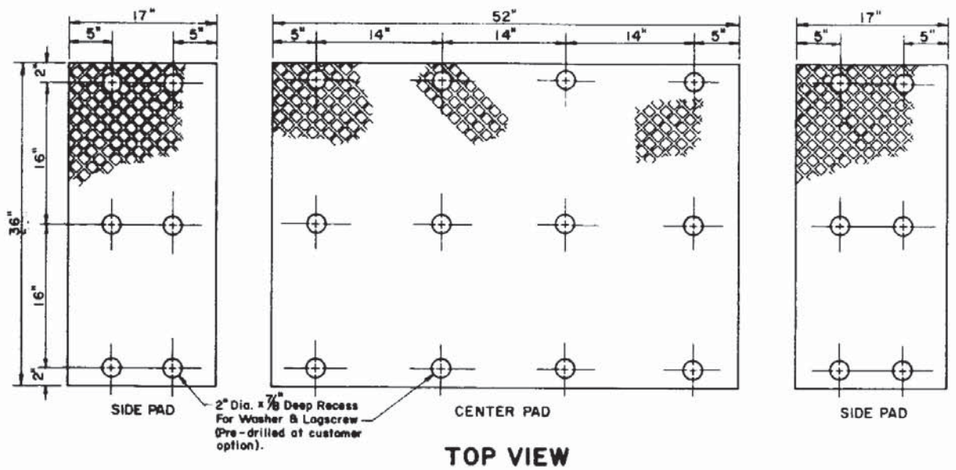

TOP VIEW

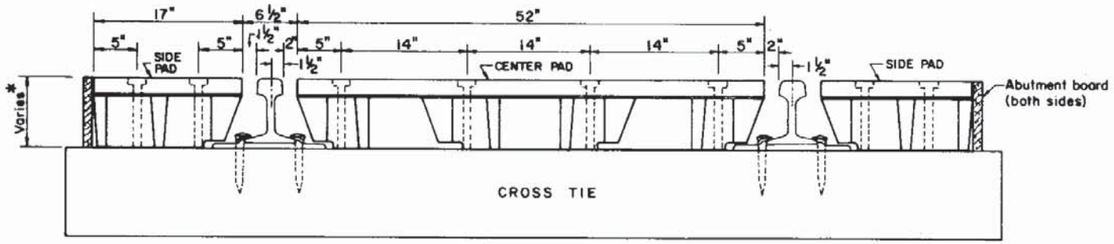

SECTION

* O.A. Height 6½" – Pads typical for 90 – 100 lb rails.
O.A. Height 7 3/8" – Pads typical for 110 – 130 lb rails.
O.A. Height 7 7/8" – Pads typical for 131, 133 or 136 lb rails.

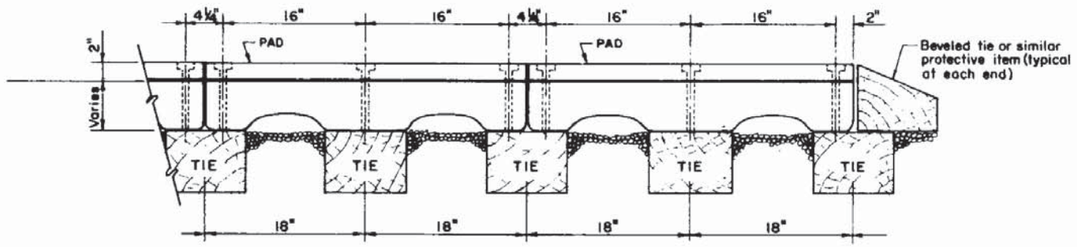

PARTIAL SECTION PARALLEL TO RAIL

CROSSING TYPE "P" ①
(POLYETHYLENE)

STOP ZONE	
Design Speed	Zone length-Distance from stop
45 MPH or less	250'
50 - 55	350'
60 - 65	500'
70	600'

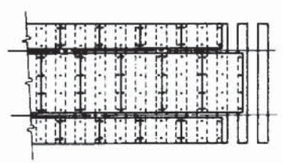

PARTIAL PLAN DEPICTING SUGGESTED PAD PLACEMENT

① Experimental – Requires Prior Approval

GENERAL NOTES

1. The crossings shown on this sheet are NOT to be used for multiple track crossings within zones for an existing or scheduled future vehicular stop. Zone lengths are charted above.
2. Crossings on this sheet may be used for single track crossings within the zones in the chart unless engineering or safety considerations dictate othewise.
3. Details shown are for straight track installations. Materials are also available for curved track installations.
4. For additional details, materials required and installation procedures refer to the manufacturers specifications.

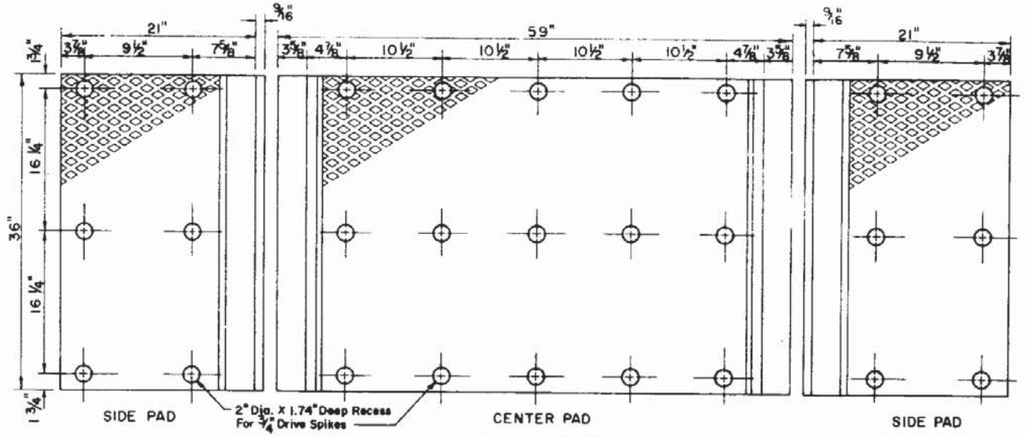

TOP VIEW

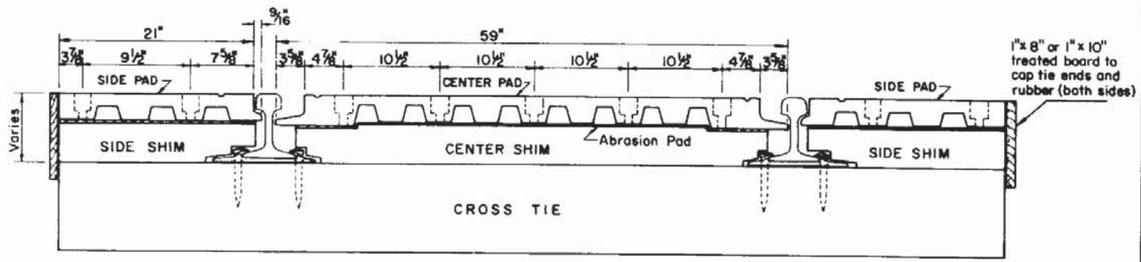

SECTION

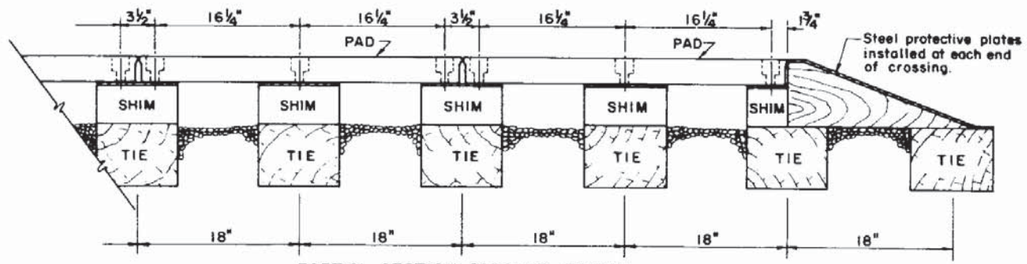

PARTIAL SECTION PARALLEL TO RAIL

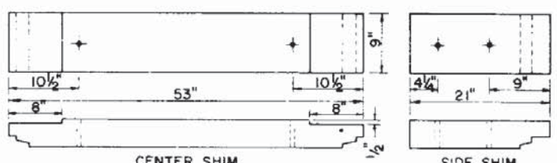

CENTER SHIM (Treated timber)
SIDE SHIM (Treated timber)
Shim thickness varies with height of rail.

CROSSING TYPE "R"
(RUBBER)

STATE OF FLORIDA DEPARTMENT OF TRANSPORTATION
ROAD DESIGN

RAILROAD CROSSINGS TYPE P & R

	Names	Dates
Designed by		
Drawn by	LMF	11/75
Checked by	GSB	11/75
F.H.W.A. Approved		10/11/78

Approved By
Deputy Design Engineer, Roadways

Revision No.	Sheet No.	Index No.
85	5 of 8	560

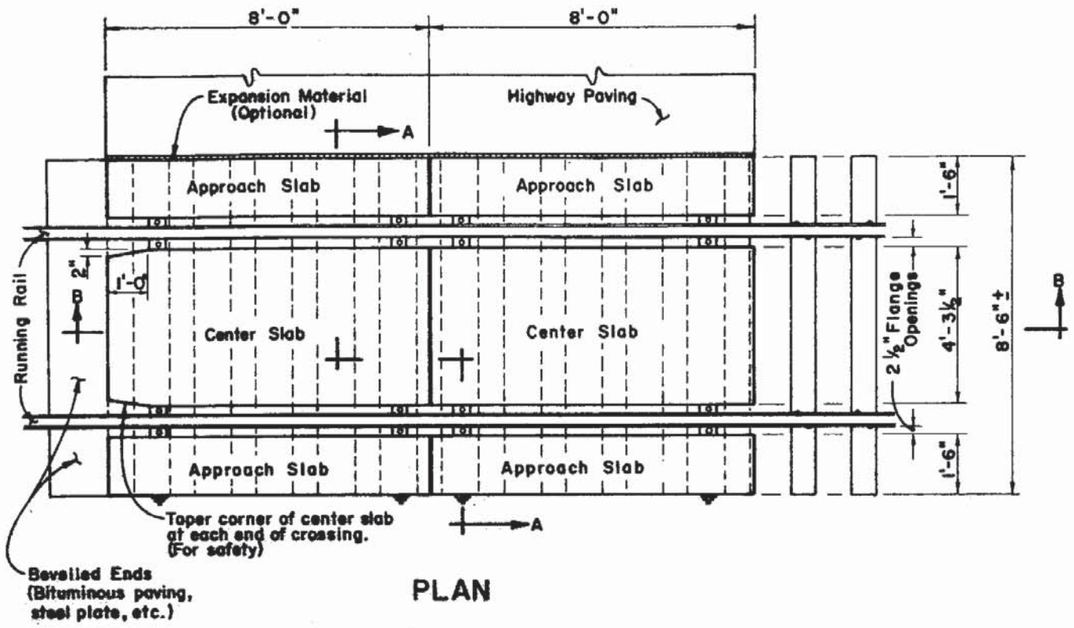

PLAN

GENERAL NOTES

1. The reinforced concrete slabs are manufactured in 8'-0" sections, 5" in depth to fit all rail sections 5 1/4" in height or heavier. Slabs are interchangeable and relocateable.
2. Center slabs are one piece construction allowing for 2½" flange opening. 80 lb. rail is used to encase, armor and reinforce slabs and is held to gage with 3 tie rods per slab.
3. Slabs are installed by a "flotation" process, supported on non-shrinkable, non-metallic grout positioned on the ties. Slabs can be placed on wood ties, concrete ties, steel ties, bridge decks or any other type of track support. No re-spacing of ties is necessary.
4. Slabs are secured to "running rails" with specially designed hardware. Insulation is to be provided for crossings in signal territory.
5. Curved slabs are fabricated to fit curved track to 22 degrees (262.04' radius). Special slabs are available for Diamond Crossings, Turnouts, Multiple Tracks, Bridge Decks and Rapid Transit Systems.
6. For additional details, materials required and installation procedures refer to the manufacturers specifications.



SECTION B-B

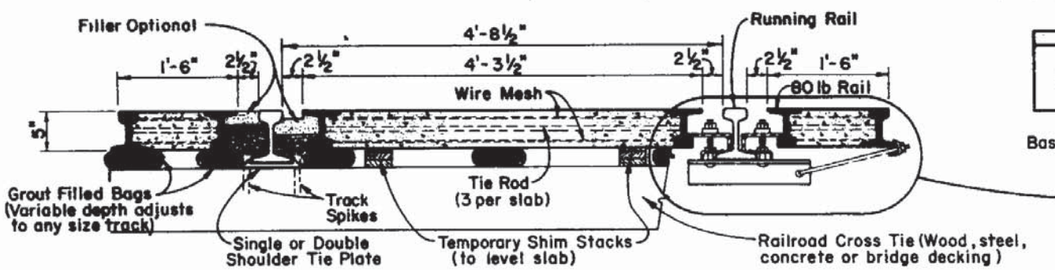

SECTION A-A

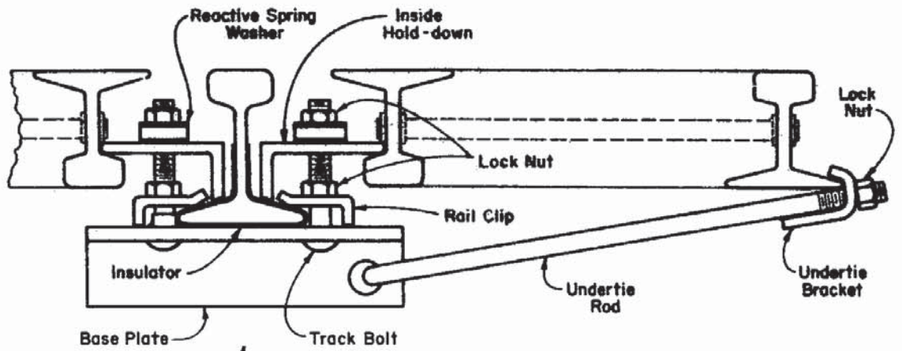

TYPICAL BOTH SIDES

STATE OF FLORIDA DEPARTMENT OF TRANSPORTATION
ROAD DESIGN

RAILROAD CROSSINGS TYPE T

	Names	Dates
Designed by		
Drawn by	LMF	2/77
Checked by	GSB	2/77
F.H.W.A. Approved		5/3/77

Approved By
Deputy Design Engineer, Roadways

Revision No.	Sheet No.	Index No.
83	6 of 8	560

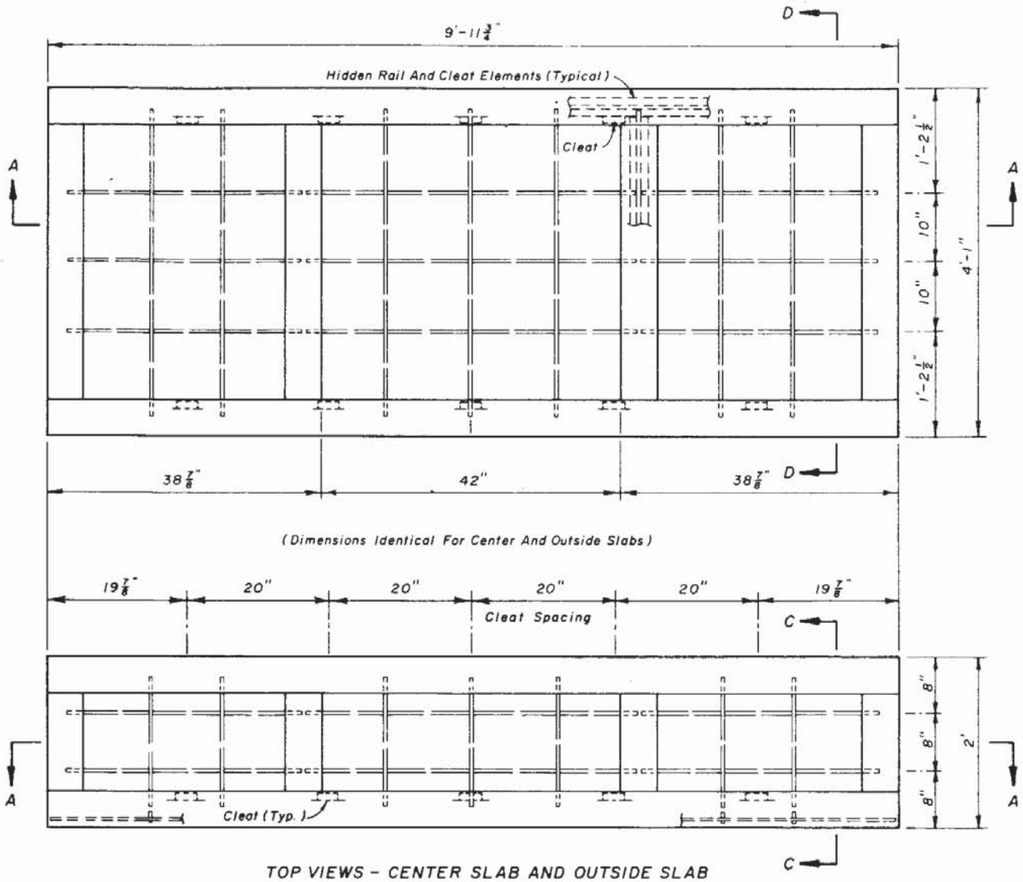

TOP VIEWS - CENTER SLAB AND OUTSIDE SLAB

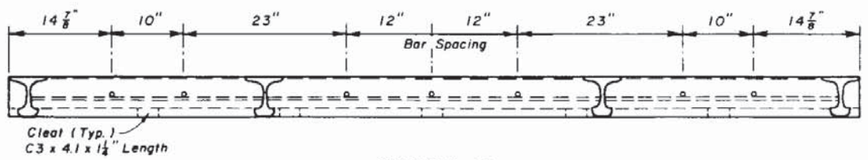

SECTION AA

STANDARD SLABS (PRECAST CONCRETE)

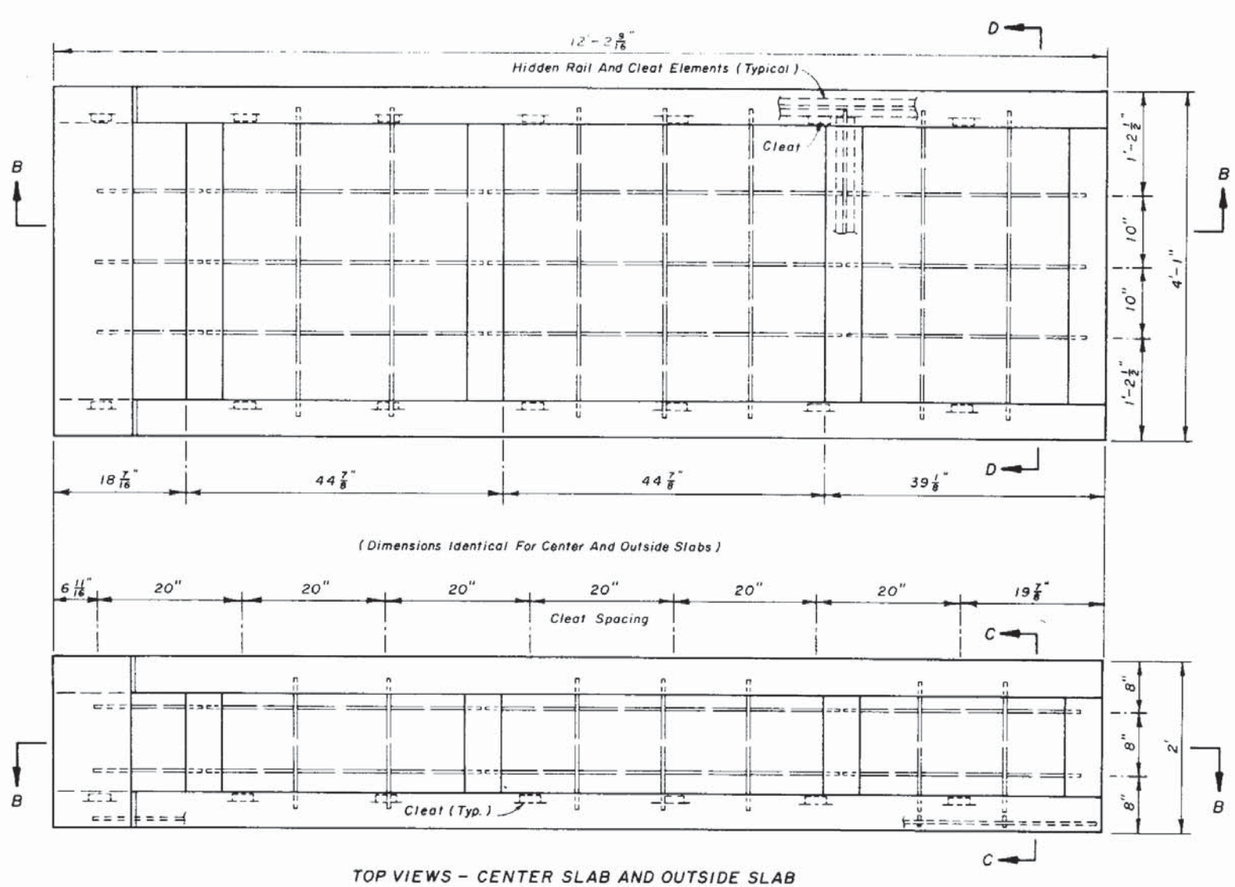

TOP VIEWS - CENTER SLAB AND OUTSIDE SLAB

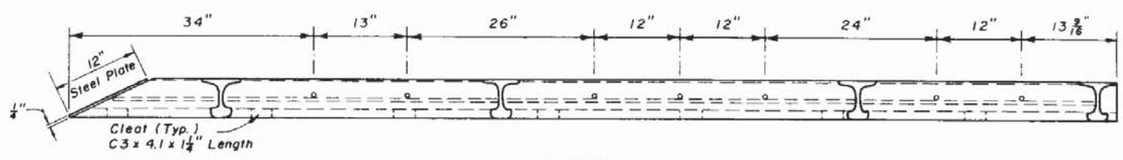

SECTION BB

RAMP SLABS (PRECAST CONCRETE)



SECTION CC SECTION DD

STANDARD AND RAMP SLAB SECTIONS

STATE OF FLORIDA DEPARTMENT OF TRANSPORTATION
ROAD DESIGN

RAILROAD CROSSING TYPE T MODIFIED

	Names	Dates
Designed By		
Drawn By	RWR	9/82
Checked By	JVG, JBW	9/82
F.H.W.A. Approved:		9/23/82

Approved By
State Design Engineer, Roadways

Revision No.	Sheet No.	Index No.
83	7 of 8	560

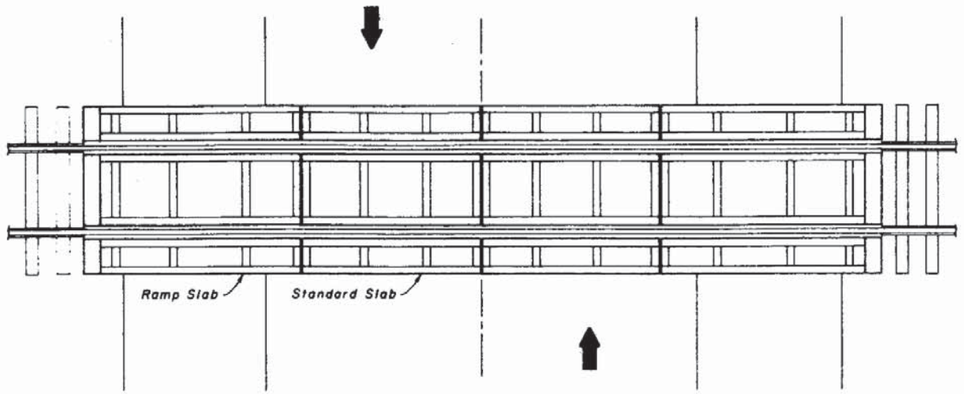

PLAN VIEW

TYPICAL 44' CROSSING

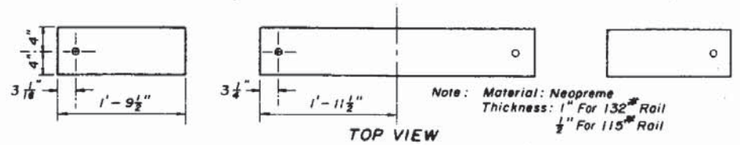

TOP VIEW

TIE PAD

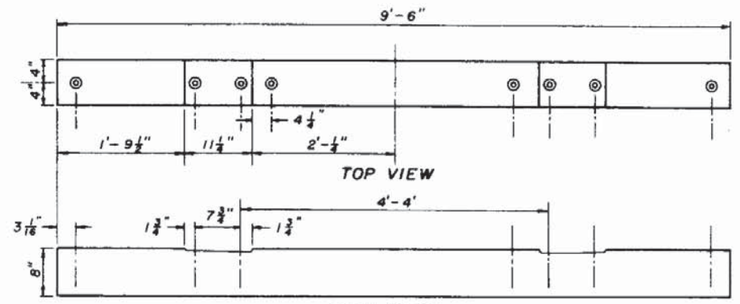

TOP VIEW

SIDE VIEW

PRECAST CONCRETE TIE (CROSSING TIE)

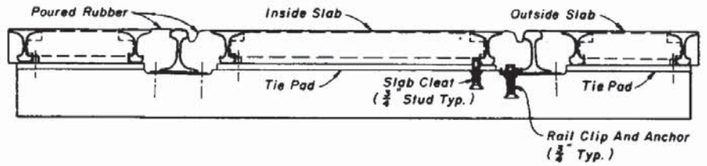

TRANSVERSE SECTION

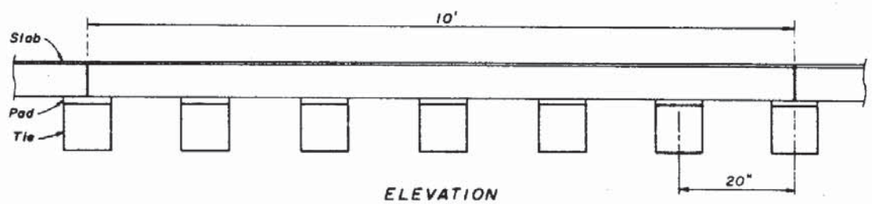

ELEVATION

TIE SPACING

GENERAL NOTES

1. Slab frames are welded 90 lb. rails.
2. Slab reinforcement all No. 4 bars.

STATE OF FLORIDA DEPARTMENT OF TRANSPORTATION
ROAD DESIGN

RAILROAD CROSSING TYPE T MODIFIED

	Names	Dates	Approved By
Designed by			
Drawn by	RWR	9/82	State Design Engineer, Roadways
Checked by	JVG, JBW	9/82	
F H W A Approved: 9/23/82			

Revision No.	Sheet No.	Index No.
83	8 of 8	560

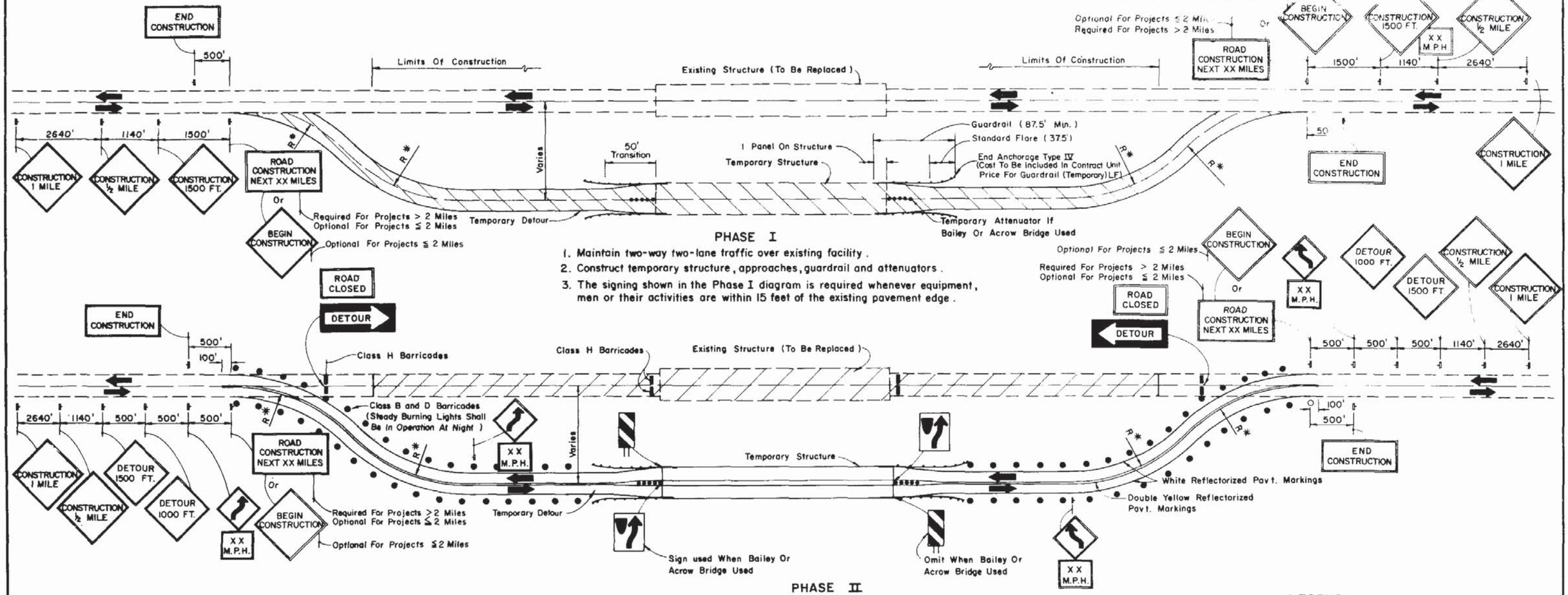

GENERAL MAINTENANCE OF TRAFFIC NOTES

1. All signing, pavement markings, barricades and warning lights necessary for maintenance of traffic shall conform to the MTCSP.
2. The detour pavement should be constructed of width equal to the existing pavement, but lanes shall be not less than 10 feet in width. When one-way one-lane operations are necessary, a minimum width of 12 feet shall be maintained and traffic controlled in accordance with the MTCSP. Minimum width for the detour shoulders is 6 feet.
3. Raised pavement markers shall be placed along the center of the detour pavement at 20 foot centers in the transition area where alignment shift is 10 feet or greater.
4. Existing signs and pavement markings that conflict with construction signings and markings shall be obliterated or removed.
5. Posted speed on the existing facility shall be decreased at the rate of 10 mph per 500 feet(minimum distance) until detour design speed is reached.
6. Method of attaching temporary guardrail to the detour structure to be approved by the Engineer.
7. Provisions approved by the Engineer shall be made for the removal of storm water from the roadway(s) during construction.
8. Temporary attenuators shall be the inertial type indicated in Figure 7.3 of the MTCSP.

R*

TABLE FOR MINIMUM RADIUS FOR NORMAL CROSS SLOPES		
POSTED SPEED	DETOUR DESIGN SPEED	MINIMUM RADIUS-R
M.P.H.	M.P.H.	FT.
55	45	1080
50	40	830
45	35	620
40	30	450
Superelevate When Smaller Radii Used		

LEGEND

- Phase I
- Phase II
- MTCSP — Manual On Traffic Control And Safe Practices
- Denotes Direction Of Traffic And Does Not Reflect Pavement Markings

STATE OF FLORIDA DEPARTMENT OF TRANSPORTATION
ROAD DESIGN

STRUCTURE REPLACEMENT
STANDARD TRAFFIC CONTROL PLAN
RURAL FACILITY

	Name	Date
Designed By	KNM	8/79
Drawn By	SHM	8/79
Checked By	JVG	8/79
F.H.W.A. Approved		9/11/79

Approved By: Deputy Design Engineer, Roadways

Revision No.	Sheet No.	Index No.
85	1 of 1	600

CASE I

TRAFFIC TRANSITION AREA UPSTREAM FROM CROSSOVER

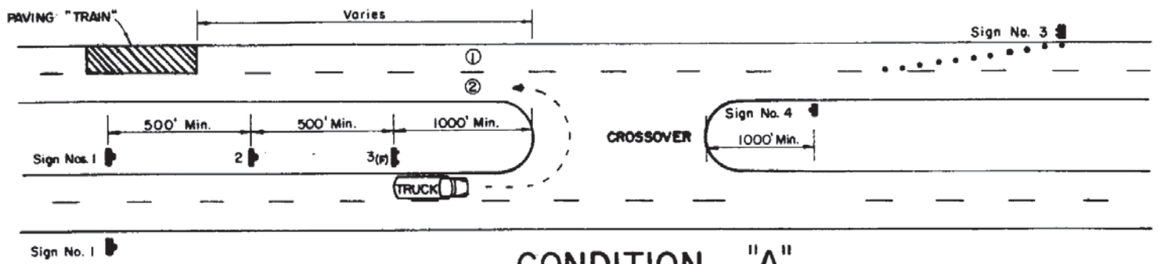

CONDITION "A"

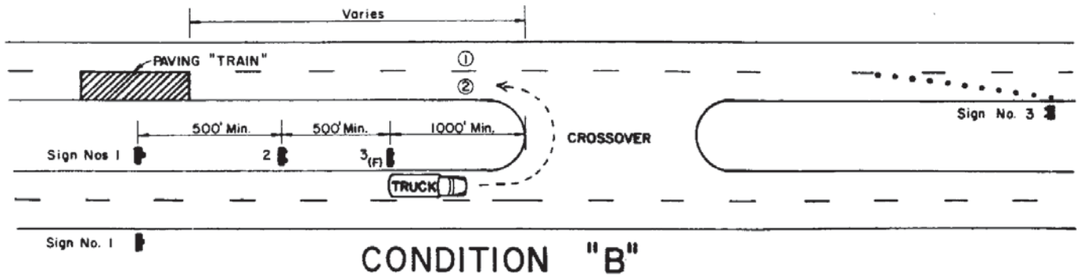

CONDITION "B"

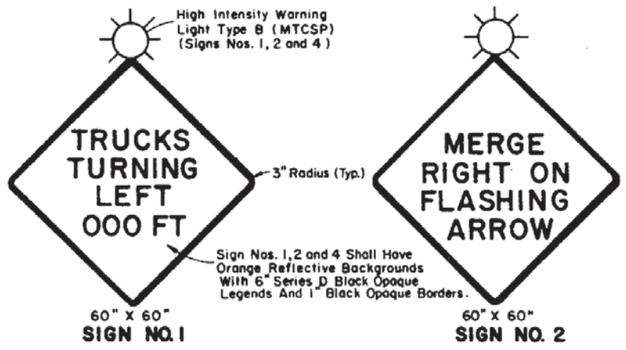

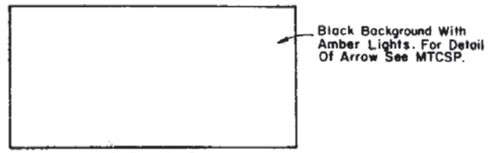

[Signs Indicated As No. 3(F) To Be Trailer Mounted And Actuated By Flagman Upon Approach Of Contractor Truck]



MAINTENANCE OF TRAFFIC

CONDITION "A"

When The Paving "Train" Is In Lane ① The U-Turning Truck Shall Cautiously Turn Into Lane ② And Proceed In Lane ② To The Front Of The "Train".

CONDITION "B"

When The Paving "Train" Is In Lane ②, The U-Turning Truck Shall Turn Into Lane ②, Cautiously Merge Into Lane ① And Proceed To The Front Of The Paving "Train".

CONDITION "A" & "B"

Lane Closure And Maintenance Of Traffic In The Roadway Being Paved Shall Be In Accordance With Case XII Of The MTCSP. The Flashing Or Sequential Arrow Board Is Required In Addition To Signs Shown In Case XII. Under No Circumstances Will The Traffic Transition Area Be Located Within The Limits Of The Crossover.

CASE II

TRAFFIC TRANSITION AREA DOWNSTREAM FROM CROSSOVER

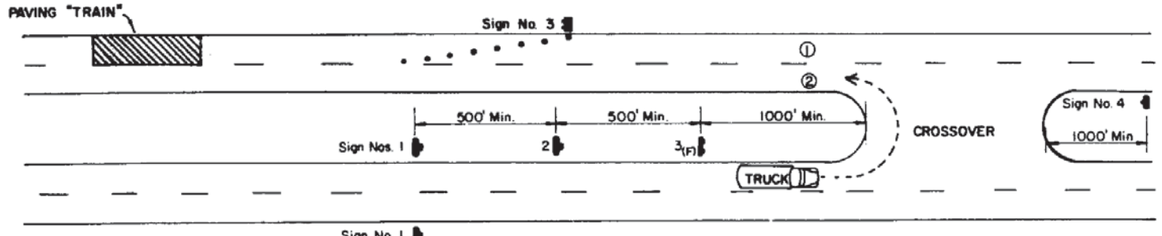

CONDITION "A"

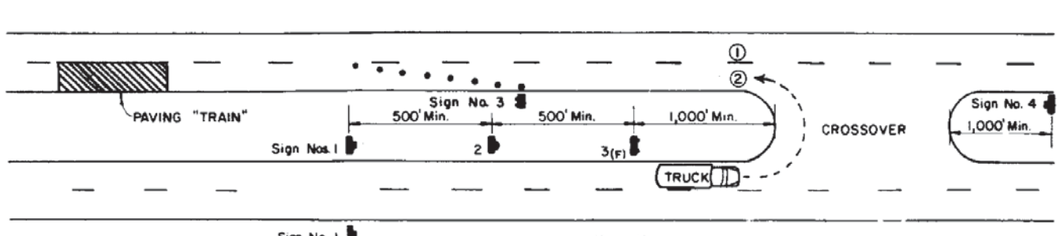

CONDITION "B"

GENERAL NOTES

When crossovers do not exist, contractor will construct temporary crossovers in accordance with Index No. 631.

MTCSP: MANUAL ON TRAFFIC CONTROL DEVICES AND SAFE PRACTICES FOR STREET AND HIGHWAY CONSTRUCTION, MAINTENANCE AND UTILITY OPERATIONS ON THE STATE MAINTAINED SYSTEMS, BY FLORIDA DEPARTMENT OF TRANSPORTATION, 1978.

STATE OF FLORIDA DEPARTMENT OF TRANSPORTATION
ROAD DESIGN

TEMPORARY CROSSOVER

TRAFFIC CONTROL PLAN

RURAL

	Names	Dates
Designed by	GW	12/71
Drawn by		
Checked by	RLF	9/78
F.H.W.A. Approved: 10/7/80		

Approved By
Deputy Design Engineer, Roadways

Revision No.	Sheet No.	Index No.
85	1 of 1	630

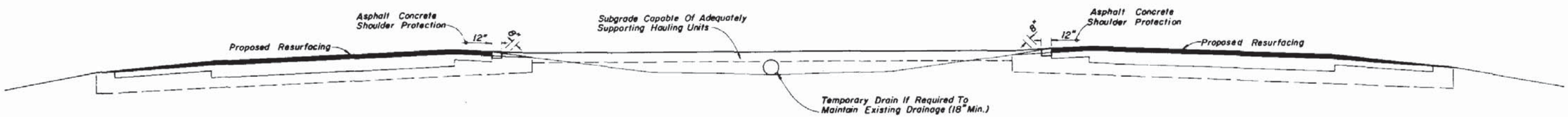

SECTION

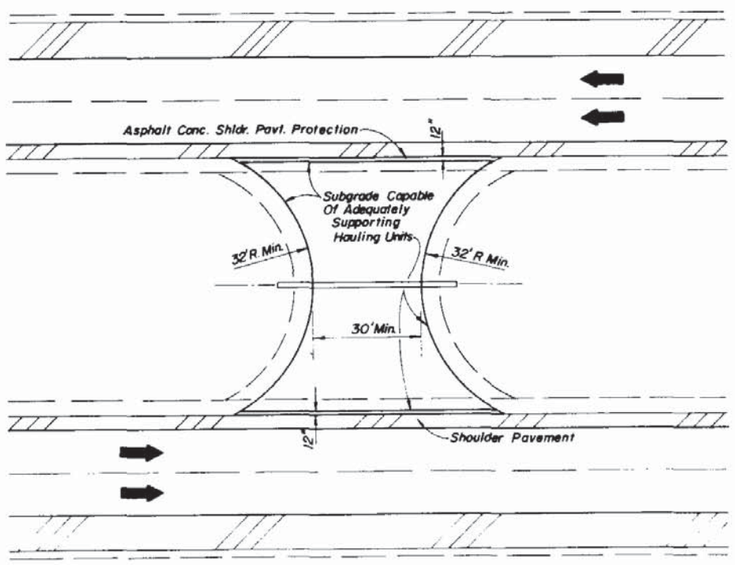

PLAN

NOTES:

1. When a crossover is no longer needed, all temporary construction shall be immediately removed and the area restored to its original condition.
2. Cost of all construction, maintenance, removal and restoration work related to temporary crossovers shall be included in the contract unit price for Maintenance Of Traffic L.S.
3. Crossovers to be constructed where sight distance is adequate in both directions as directed by the Engineer.

STATE OF FLORIDA DEPARTMENT OF TRANSPORTATION
ROAD DESIGN

TEMPORARY CROSSOVER
CONSTRUCTION DETAILS
RURAL

	Names	Dates
Designed By		
Drawn By		
Checked By		
F.H.★A. Approved 10/7/80		

Approved By
Deputy Design Engineer, Roadways

Revision No.	Sheet No.	Index No.
81	1 of 1	631

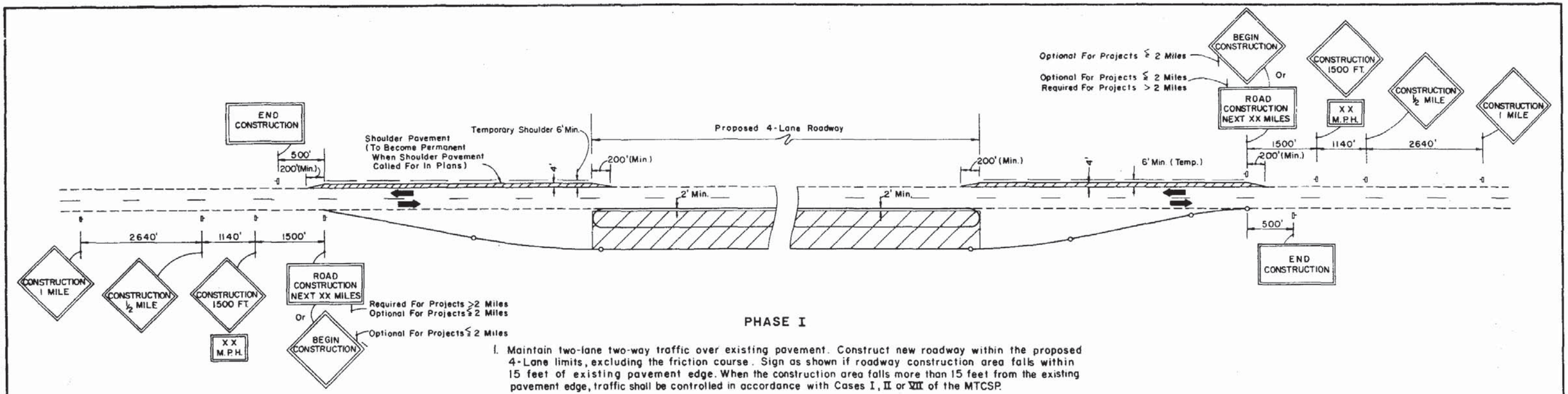

PHASE I

1. Maintain two-lane two-way traffic over existing pavement. Construct new roadway within the proposed 4-Lane limits, excluding the friction course. Sign as shown if roadway construction area falls within 15 feet of existing pavement edge. When the construction area falls more than 15 feet from the existing pavement edge, traffic shall be controlled in accordance with Cases I, II or VIII of the MTCSP.

2. Construct shoulder pavement to provide two-lane two-way traffic over shoulder and existing pavement during Phase II roadway construction. Lanes to be not less than 10 feet in width. Signing as shown to be in place prior to shoulder pavement construction.

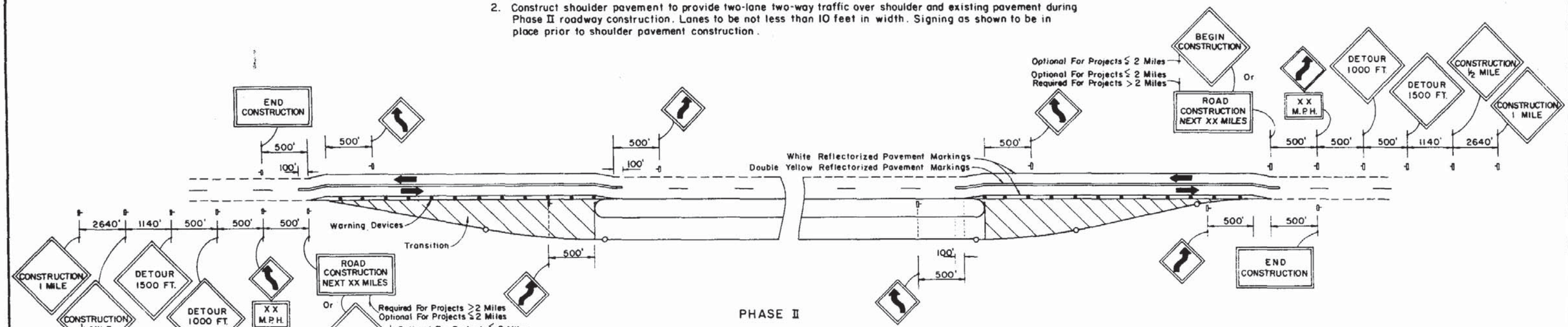

PHASE II

1. Remove existing pavement marking, in areas of detour and re-mark as shown, install warning devices and re-sign as shown. Traffic to be controlled in accordance with Case VI of the MTCSP. Lanes to be not less than 10' in width.

2. Route through traffic to temporary and existing pavement.

3. Construct transitions, excluding friction course.

LEGEND

	Phase I
	Phase II
MTCSP	Manual On Traffic Control And Safe Practices
➡	Denotes Direction Of *Traffic And Does Not* Reflect Pavement Marking

STATE OF FLORIDA DEPARTMENT OF TRANSPORTATION
ROAD DESIGN

CONVERTING TWO LANES TO FOUR LANES DIVIDED

STANDARD TRAFFIC CONTROL PLAN RURAL FACILITY

	Names	Dates
Designed by	K N M	
Drawn by	H S D	
Checked by	J V G	

Approved By
Deputy Design Engineer, Roadways

F.H.W.A. Approved: 5/5/80

Revision No.	Sheet No.	Index No.
81	1 of 2	640

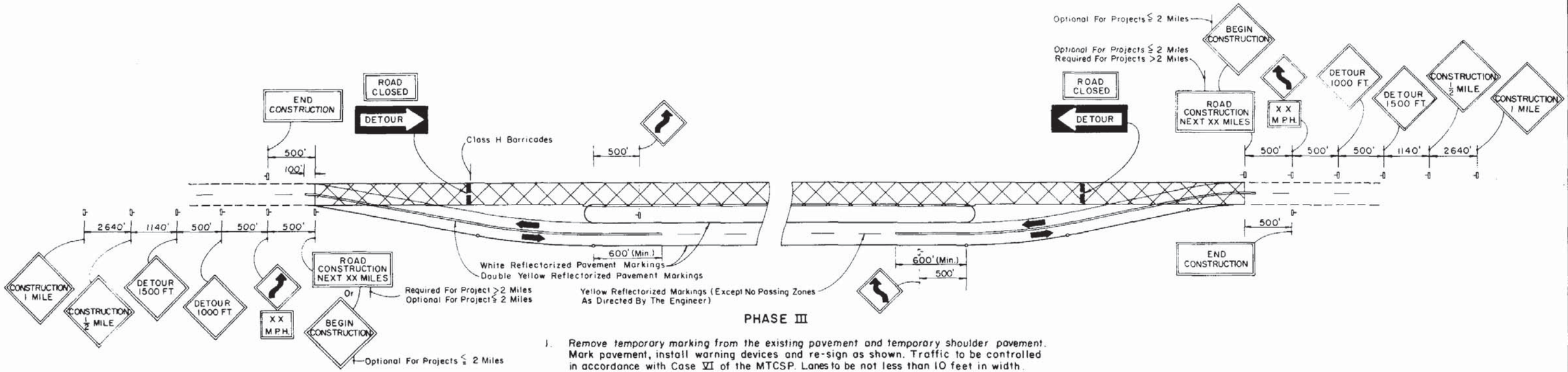

PHASE III

1. Remove temporary marking from the existing pavement and temporary shoulder pavement. Mark pavement, install warning devices and re-sign as shown. Traffic to be controlled in accordance with Case VI of the MTCSP. Lanes to be not less than 10 feet in width.
2. Route through traffic to newly constructed roadway.
3. Resurface or reconstruct existing pavement including required shoulder pavement and friction course.

LEGEND

- Phase I
- Phase II
- Phase III
- MTCSP — Manual On Traffic Control And Safe Practices
- Denotes Direction Of Traffic And Does Not Reflect Pavement Marking

PHASE IV

1. Reroute through traffic as shown in Phase II. Signing to be as shown in Phase II.
2. Construct friction course over pavement constructed in Phase I and II.

GENERAL MAINTENANCE OF TRAFFIC NOTES

1. All signing, pavement marking, barricades and warning lights necessary for maintenance of traffic shall conform to the MTCSP.
2. Lane widths for maintenance of two-way traffic should desirably be equal to lane widths of the existing facility, but lanes shall be not less than 10 feet in width. When one-lane one-way operations are necessary, a minimum width of 12 feet shall be maintained and traffic controlled in accordance with the MTCSP. Minimum width for the temporary shoulders is 6 feet.
3. Raised pavement markers shall be placed along the center of the pavement under traffic at 20 foot centers in the transition area where alignment shift is 10 feet or greater.
4. Existing signs and pavement markings that conflict with construction signing and marking shall be obliterated or removed.
5. Posted speed on the existing facility shall be decreased at the rate of 10 mph per 500 feet (minimum distance) until detour speed is reached.
6. Additional barricades, signing, lighting or other traffic controls as required by the MTCSP shall be provided as conditions warrant in each phase.
7. Intermediate advisory speed signs shall be erected when the length of construction exceeds one mile, as directed by the Engineer.
8. Provisions approved by the Engineer shall be made for the removal of storm water from the roadway(s) during construction.
9. Barricading shall meet the requirements of Chart I of the MTCSP.

STATE OF FLORIDA DEPARTMENT OF TRANSPORTATION
ROAD DESIGN

CONVERTING TWO LANES TO FOUR LANES DIVIDED
STANDARD TRAFFIC CONTROL PLAN RURAL FACILITY

	Names	Dates
Designed By	K N M	
Drawn By	H S D	
Checked By	J V G	
F H W A Approved: 5/5/80		

Approved By
Deputy Design Engineer, Roadways

Revision No.	Sheet No.	Index No.
83	2 of 2	640

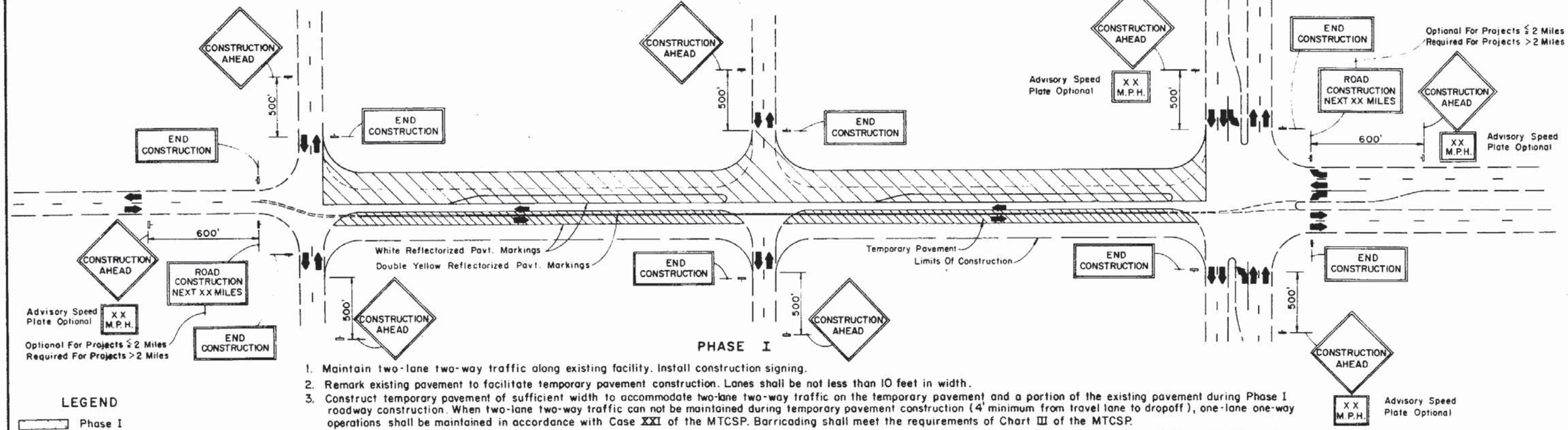

PHASE I

1. Maintain two-lane two-way traffic along existing facility. Install construction signing.
2. Remark existing pavement to facilitate temporary pavement construction. Lanes shall be not less than 10 feet in width.
3. Construct temporary pavement of sufficient width to accommodate two-lane two-way traffic on the temporary pavement and a portion of the existing pavement during Phase I roadway construction. When two-lane two-way traffic can not be maintained during temporary pavement construction (4' minimum from travel lane to dropoff), one-lane one-way operations shall be maintained in accordance with Case XXI of the MTCSP. Barricading shall meet the requirements of Chart III of the MTCSP.
4. Mark the pavement in accordance with the Phase I diagram. Reroute through traffic to the temporary pavement and a portion of the existing pavement. Lanes shall be not less than 10 feet in width.
5. Construct two lanes of the proposed roadway, excluding the friction course. Side street traffic to be maintained. Through and cross traffic to be controlled in accordance with Cases XX and XXI of the MTCSP. Barricading shall meet the requirements of Chart III of the MTCSP. When work extends through an intersection, temporarily reroute the cross traffic to other cross streets. When rerouting is not possible, provide one lane access (minimum) for two-lane two-way cross streets and one lane access (minimum) each direction for four-lane two-way cross streets.

LEGEND

- Phase I
- Phase II
- MTCSP Manual On Traffic Control And Safe Practices
- Denotes Direction Of Traffic And Does Not Reflect Pavement Markings

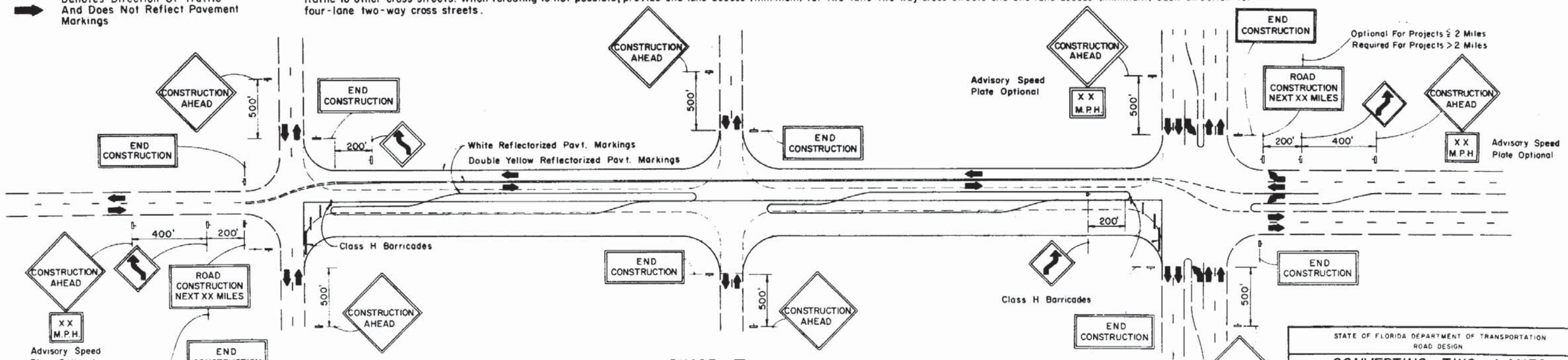

PHASE II

1. Sign and mark Phase I pavement in accordance with the Phase II diagram. Lanes to be not less than 10 feet in width.
2. Reroute through traffic to Phase I pavement.
3. Complete all Phase II construction, including the friction course. Side street traffic to be maintained. Through and cross traffic to be controlled in accordance with Cases XX and XXI of the MTCSP. Barricading shall meet the requirements of Chart III of the MTCSP. When work extends through an intersection, temporarily reroute cross traffic to other cross streets. When rerouting is not possible, provide one lane access (minimum) for two-lane two-way cross streets and one lane access (minimum) each direction for four-lane two-way cross streets.

STATE OF FLORIDA DEPARTMENT OF TRANSPORTATION
ROAD DESIGN

CONVERTING TWO LANES TO FOUR LANES DIVIDED
STANDARD TRAFFIC CONTROL PLAN
URBAN FACILITY

	Names	Dates
Designed by	KNM	
Drawn by	SHM	
Checked by	JVG	

Approved By: [signature] State Design Engineer, Roadways

F.H.W.A. Approved: 5/5/80

Revision No.	Sheet No.	Index No.
81	1 of 2	641

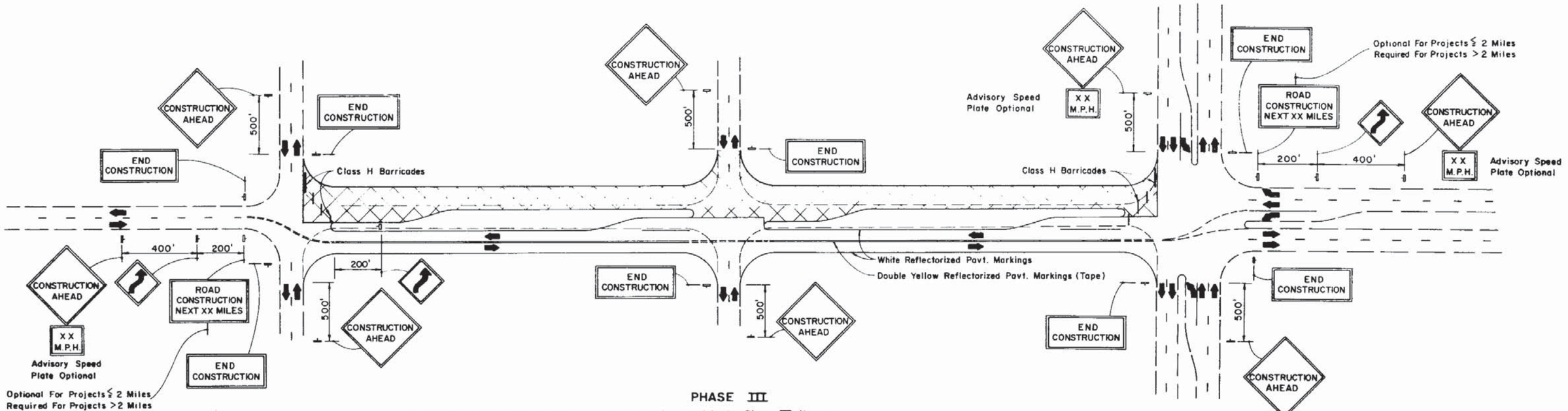

PHASE III

1. Sign and mark Phase II pavement in accordance with the Phase III diagram.
2. Reroute through traffic to Phase II pavement.
3. Construct friction course over Phase I pavement. Side street traffic to be maintained. Through and cross traffic to be controlled in accordance with Cases XX and XXI of the MTCSP. When work extends through an intersection, temporarily reroute cross traffic to other cross streets. When rerouting is not possible, provide one lane access (minimum) for two-lane two-way cross streets and one lane access (minimum) each direction for four-lane two-way cross streets.

GENERAL MAINTENANCE OF TRAFFIC NOTES

1. All signing, pavement marking, barricades and warning lights necessary for maintenance of traffic shall conform to the M T C S P.
2. Raised pavement markers shall be placed along the center of pavement open to traffic at 20' centers in the transition area where alignment shift is 10 feet or greater.
3. For divided facility, identical through traffic signing as shown above shall be placed on the outside and median of both roadways for each phase.
4. Existing signs and pavement markings that conflict with construction signings and markings shall be obliterated or removed.
5. At signalized intersections, signals shall be directed or relocated as required to the center of relocated lanes.
6. Provisions approved by the Engineer shall be made for the removal of storm water from the roadway(s) during construction.
7. Additional barricades, signing, lighting or other traffic controls as required by the MTCSP shall be provided as conditions warrant in each phase.

LEGEND

▨	Phase I
▨	Phase II
▨	Phase III
MTCSP	Manual On Traffic Control And Safe Practices
➡	Denotes Direction Of Traffic And Does Not Reflect Pavement Markings

STATE OF FLORIDA DEPARTMENT OF TRANSPORTATION
ROAD DESIGN

CONVERTING TWO LANES TO FOUR LANES DIVIDED
STANDARD TRAFFIC CONTROL PLAN
URBAN FACILITY

	Names	Dates
Designed by	K N M	
Drawn by	S H M	
Checked by	J V G	

Approved By: Deputy Design Engineer, Roadways

F.H.W.A. Approved: 5/5/80

Revision No.	Sheet No.	Index No.
83	2 of 2	641

FLORIDA DEPARTMENT OF TRANSPORTATION
DESIGN CRITERIA RELATED TO HIGHWAY SAFETY

January 1986

TYPE OF FACILITY	INTERSTATE, OTHER LIMITED ACCESS, OR DIVIDED (4 OR MORE LANES) DESIGN SPEED OF 50 MPH OR GREATER	UNDIVIDED - DESIGN SPEED OF 50 MPH OR GREATER AND PROJECTED ADT (20 YR) OF 1,600 OR GREATER	UNDIVIDED - DESIGN SPEED OF 50 MPH OR GREATER AND PROJECTED ADT (20 YR) LESS THAN 1,600	DIVIDED OR UNDIVIDED - DESIGN SPEED OF 35 - 45 MPH	MUNICIPAL - DESIGN SPEED OF 45 MPH OR LESS (CURB AND GUTTER)
EMBANKMENT SLOPE	Fill Ht. 0'-5' 6:1 5'-10' 6:1 to edge of CZ & 4:1 10'-20' 6:1 to edge of CZ & 3:1 > 20' 2:1 R/W cost must be considered in urban areas in using these slopes	Fill Ht. 0'-5' 6:1 5'-10' 6:1 to edge of CZ & 4:1 10'-20' 6:1 to edge of CZ & 3:1 > 20' 2:1	Fill Ht. 0'-5' 6:1 except where R/W is insufficient then 6:1 to edge of CZ & 3:1 will be permitted. 5'-20' 6:1 to edge of CZ & 3:1 except where R/W is insufficient then 2:1 with guardrail will be permitted.	Fill Ht. 0'-5' 6:1 except where R/W is insufficient then 6:1 to edge of CZ & 3:1 will be permitted. 5'-20' 6:1 to edge of CZ & 3:1 except where R/W is insufficient then 2:1 with guardrail will be permitted.	2:1 or to suit property owner, not flatter than 6:1. R/W cost must be considered for high fill sections in urban areas.
CLEAR WIDTHS FOR BRIDGES	Travel lanes plus 10' Rt. and 6' Lt. 10' Lt. for 6 or more lanes.	Travel lanes plus approach shoulder widths.	Travel lanes plus approach shoulder widths.	Divided - Travel lanes plus approach shoulder width Rt. and 6' Lt. unless full median section is carried across structure. Undivided - Travel lanes plus approach shoulder widths.	Full section (face to face of curb) plus clearance to bridge rail.
BACKSLOPES	4:1 (Normal)	4:1 (Normal)	4:1 where R/W permits or 3:1.	4:1 where R/W permits or 3:1.	2:1 or to suit property owner, not flatter than 6:1.
CLEAR ZONE (CZ)	30' min. from edge of travel lane, 18' min. from edge of auxiliary lane. Shoulder width plus 2' to face of guardrail (at shoulder line when shoulder width is 12').	30' min. from edge of travel lane, 18' min. from edge of auxiliary lane. Shoulder width plus 2' to face of guardrail.	20' min. from edge of travel lane, 14' min. from edge of auxiliary lane. Shoulder width plus 2' to face of guardrail (8' min.). For projected ADT (20 yr.) less than 750 14' min. from edge of both travel and auxiliary lanes.	18' from edge of travel lane or 14' from edge of auxiliary lane where R/W permits, 14' min. from edge of both travel and auxiliary lanes. Shoulder width plus 2' to face of guardrail (8' min.).	4' from face of curb. Ø Bridge piers normally will be 16' min. from edge of travel lane. *
SIGNS	Not generally in median. Outside clear zone or behind barrier that is justified for other reasons. Cantilever signs may be located inside clear zone protected by barrier. Frangible single column signs to be located in accordance with Traffic Design Standards Index No. 17302. All supports are breakaway or frangible except overhead cantilever or truss signs.	Outside clear zone or behind barrier that is justified for other reasons. Cantilever signs may be located inside clear zone protected by barrier. Frangible single column signs to be located in accordance with Traffic Design Standards Index No. 17302. All supports are breakaway or frangible except overhead cantilever or truss signs.	Outside clear zone or behind barrier that is justified for other reasons. Cantilever signs may be located inside clear zone protected by barrier. Frangible single column signs to be located in accordance with Traffic Design Standards Index No. 17302. All supports are breakaway or frangible except overhead cantilever or truss signs.	Outside clear zone or behind barrier that is justified for other reasons. Cantilever signs may be located inside clear zone protected by barrier. Frangible single column signs to be located in accordance with Traffic Design Standards Index No. 17302. All supports are breakaway or frangible except overhead cantilever or truss signs.	2' min. from face of curb to inside edge of sign panel. Sign placement shall not block sidewalk.
LIGHT POLES	Not generally in median. Outside clear zone or frangible base 20' from edge of travel lane and 14' min. from edge of auxiliary lane or behind approved barrier that is justified for other reasons.	Outside clear zone or frangible base 20' from edge of travel lane and 14' min. from edge of auxiliary lane or behind approved barrier that is justified for other reasons.	Outside clear zone for both frangible and non-frangible bases. Desirable 20' from edge of travel lane and 14' min. from edge of auxiliary lane or behind approved barrier that is justified for other reasons.	18' from edge of travel lane or 14' from edge of auxiliary lane for both frangible and non-frangible bases where R/W permits, 14' min. from edge of both travel and auxiliary lanes, or, behind approved barrier that is justified for other reasons.	4' min. from face of curb. Ø
UTILITY POLES, FIRE HYDRANTS, ETC.	Not in median. Not within R/W of the main travel way of interstate or other limited access facilities. For other facilities outside the clear zone. Normally 6.5' inside R/W when beyond clear zone otherwise as close as practical to R/W line.	Outside clear zone. Normally 6.5' inside R/W when beyond clear zone otherwise as close as practical to R/W line.	Outside clear zone. Normally 6.5' inside R/W when beyond clear zone otherwise as close as practical to R/W line.	See clear zone requirements above. Not in median. Normally 6.5' inside R/W when beyond clear zone otherwise as close as practical to R/W line.	Not in median. 4' min. from face of curb. Ø
RAILROAD CROSSING DEVICES	Not on interstate or expressway. 10' min. from edge of travel lane or 6' min. from edge of auxiliary lane to near edge of device. No guardrail.	10' min. from edge of travel lane or 6' min. from edge of auxiliary lane to near edge of device. No Guardrail.	10' min. from edge of travel lane or 6' min. from edge of auxiliary lane to near edge of device. No Guardrail.	10' min. from edge of travel lane or 6' min. from edge of auxiliary lane to near edge of device. No Guardrail. ◇	2.5' min. from face of curb to near edge of device.
MEDIAN WIDTHS	Interstate or limited access facilities. 60' min. - 60 mph and over 40' min. - under 60 mph Other divided highways 40' min. - 55 mph and over 22' min. - under 55 mph				19.5' min. - 45 mph 15.5' min. - 40 mph or less (greater widths desirable) For reconstruction projects the min. painted median width with provision for left turn is 10' (greater widths desirable)
TREES △ Existing or Expected Dia. ≥ 4"	Not generally in median. 40' desirable (30' min.) from edge of travel lane, 18' min. from edge of auxiliary lane. +	30' min. from edge of travel lane, 18' min. from edge of auxiliary lane.	20' min. from edge of travel lane, 14' min. from edge of auxiliary lane. For projected ADT (20 yr.) less than 750 14' min. from edge of both travel and auxiliary lanes.	Not generally in median. 14' min. from edge of both travel and auxiliary lanes, 8' min. from edge of driving lane for median where median curb is used.	4' min. from face of curb where curb height is 6" or greater. 8' min. from edge of driving lane. ☐

Design speed to be established using realistic anticipated operating speed. (Assume 55 mph limits to be non-existent).

Preferred ditch cross sections are shown on pages 25, 26 & 27 of the AASHTO Guide For Selecting, Locating And Designing Traffic Barriers.

Consideration should be given to maintaining greater than the above specified clearances and/or flatter slopes where feasible and practical.

Ø On projects where the 4' min. offset would place the utility or other obstruction in substantial conflict with the sidewalk or when utility poles would create an unreasonable conflict with requirements of the National Safety Codes and other alternatives are deemed impractical the minimum may be reduced to 2.5' from face of curb - each case where this deviation is proposed must be supported on an individual basis.

* At locations where immediately adjacent development such as buildings, etc. provide less clearance, bridge piers can be placed to provide clearance less than 16'.

Values shown above shall be used on all new construction and on reconstruction projects to the extent that economic and environmental considerations and R/W limitations will allow. For definitions of new construction and reconstruction see "Manual Of Uniform Minimum Standards For Design, Construction And Maintenance For Streets And Highways".

Driving lane is any traffic lane, travel or auxiliary.

An auxiliary lane is the portion of the roadway adjoining the traveled way for parking, speed changes, turning, storage for turning, weaving, truck climbing or for other purposes supplementary to through traffic movement.

Traveled way (travel lanes) is the portion of the roadway for the movement of vehicles, exclusive of shoulders and auxiliary lanes.

△ Offsets shown are for existing or newly planted trees. If existing trees are close to but less than the minimum offset indicated, other factors should be considered to determine adequacy of offset, i.e. ADT; operating speed; accident history; size, age and type of tree; protection by a barrier; etc. Newly planted trees may be placed behind barriers that are provided for other reasons. The minimum setback distance from the back of concrete barriers, walls, abutments or other rigid obstructions is 4' for newly planted trees. For W-beam guardrail the minimum setback is 6' from the face of the rail. Offsets shown apply to both outside and median for divided highways unless otherwise noted. When trees are placed in median adequate sight distance at intersections, turnouts and median openings, etc, shall be maintained.

☐ Minimum distance to existing or newly planted trees. To be used on facilities classified as municipal when no curb and gutter exist, when curb height is less than 6" or when curb height has been reduced by resurfacing. May be reduced to 5' from edge of driving lane for speeds of 30 mph or less.

\+ When 30' min. offset established, care shall be taken to avoid blocking sight distance to roadside signs.

◇ For divided facilities with curbed medians and undivided facilities utilizing curbed separations at crossings, 2.5' from face of curb to near edge of signal devise in accordance with Traffic Design Standards Index No. 17882.

STATE OF FLORIDA DEPARTMENT OF TRANSPORTATION
ROAD DESIGN

DESIGN CRITERIA RELATED TO HIGHWAY SAFETY

	Names	Dates	Approved By
Designed by			(signature) Deputy Design Engineer, Roadways
Drawn by	HSD	6/81	
Checked by	JVG	6/81	
FHWA Approved		9/23/82	

Revision No.	Sheet No.	Index No.
86	1 of 1	700

TABLE OF CONTENTS
TRAFFIC DESIGN STANDARDS

INDEX NO.	DESCRIPTION
	ROADWAY LIGHTING
17500	CONVENTIONAL POLE DETAILS
17501	GENERAL NOTES
17502	HIGHMAST LIGHTING DETAILS (3 SHEETS)
17503	ROADWAY LIGHTING DETAILS
17504	SERVICE POINT DETAILS
17505	EXTERNAL LIGHTING FOR SIGNS (2 SHEETS)
	SIGNING AND MARKINGS
9535	STANDARD ROADSIDE SIGN BREAK AWAY POST & PANEL DETAIL (4 SHEETS)
10965	BRIDGE SPAN TRUSS FOR OVERHEAD SIGNS, ASSEMBLY DETAILS FOR TYPE A, B OR C TRUSS
11037	OVERHEAD SIGN STRUCTURES, DETAILS OF SIGN FACES & TRUSS CONNECTION
11201	FOOTINGS FOR OVERHEAD SIGN TRUSSES, TYPE A, B OR C TRUSS (SHEET 1 OF 2)
11201	FOOTINGS FOR OVERHEAD SIGN TRUSSES, OVERHEAD CANTILEVER (SHEET 2 OF 2)
11226	TRUSSES FOR OVERHEAD SIGNS, ALUMINUM CANTILEVER
11860	TYPE "C" SINGLE COLUMN GROUND SIGNS (SIGN PROFILE & IDENTIFICATION NUMBERS)
11861	SINGLE COLUMN GROUND SIGNS (60 MPH) (COLUMNS SIZE, COLUMN HEIGHT & COLUMN FOOTINGS)
11862	SINGLE COLUMN GROUND SIGNS (70 MPH) (COLUMN SIZE, COLUMN HEIGHT & COLUMN FOOTINGS)
11863	SINGLE COLUMN GROUND SIGNS (80 MPH) (COLUMN SIZE, COLUMN HEIGHT & COLUMN FOOTINGS)
11864	SINGLE COLUMN GROUND SIGNS (90 MPH) COLUMN SIZE, COLUMN HEIGHT & COLUMN FOOTINGS)
11926	ALUMINUM BASES FOR COLUMN SUPPORTS
13417	DETAILS FOR MOUNTING EXIT NUMBERING PANELS TO HIGHWAY SIGNS
17302	TYPICAL SECTIONS FOR SINGLE COLUMN SIGN PLACEMENT
17320	ARROW LAYOUTS FOR GROUND & OVERHEAD SIGNS

INDEX NO.	DESCRIPTION
	SIGNING AND MARKINGS CONT'D
17328	SIGNING FOR TRUCK WEIGHING & INSPECTION STATION (3 SHEETS)
17344	SCHOOL SIGNING & MARKINGS (6 SHEETS)
17345	INTERCHANGE MARKINGS (4 SHEETS)
17346	SPECIAL MARKING AREAS (8 SHEETS)
17349	TRAFFIC CONTROL FOR STREET TERMINATIONS
17350	SIGNING FOR MOTORIST SERVICES
17351	TYPICAL WELCOME CENTER SIGNING (2 SHEETS)
17352	TYPICAL PLACEMENT OF REFLECTIVE PAVEMENT MARKERS (2 SHEETS)
17353	MARKINGS FOR ATTENUATION SYSTEMS
17355	SPECIAL SIGN DETAILS (4 SHEETS)
17356	SPAN WIRE MOUNTING DETAILS
	TRAFFIC SIGNAL AND EQUIPMENT
17721	CONDUIT INSTALLATION DETAILS (2 SHEETS)
17727	SIGNAL CABLE AND SPAN WIRE INSTALLATION DETAILS
17733	AERIAL INTERCONNECT
17736	ELECTRIC POWER SERVICE
17764	PEDESTRIAN CONTROL SIGNALS INSTALLATION DETAILS
17781	VEHICLE LOOP INSTALLATION DETAILS (2 SHEETS)
17784	PEDESTRIAN DETECTOR ASSEMBLY INSTALLATION DETAILS
17841	CABINET INSTALLATION DETAILS
17870	STANDARD SIGNAL OPERATING PLANS (2 SHEETS)
17881	ADVANCE WARNING FOR R/R CROSSING
17882	RAILROAD GRADE CROSSING TRAFFIC CONTROL DEVICES (4 SHEETS)
17890	TRAFFIC CONTROL DEVICES FOR MOVABLE SPAN BRIDGE SIGNALS (3 SHEETS)

REVISIONS
TRAFFIC DESIGN STANDARDS
1986

INDEX NUMBER	SHEET NUMBER	DESCRIPTION
17500	1 of 1	Added Ground wire size for Surge Protector.
17502	3 of 3	Added Ground wire size for Surge Protector.
17503	1 of 1	Added notes for pull box specifications.
17302	1 of 1	Revised clearance for Case IX.
17328	2 of 3	Added note reference - sign corner radius and border.
17345	3 of 4	Deleted skipline on acceleration lane.
17346	1 of 8	Deleted 6'-10' yellow skip for major and minor roads.
17346	2 of 8	Revised arrow spacing and wheel chair ramps.
17346	3 of 8	Revised length of lane line from 75' to 50'.
17346	6 of 8	Revised railroad notes and deleted metal button detail.
17346	7 of 8	Revised crosswalk width.
17346	8 of 8	Revised spacing for railroad marking.
17352	1 of 2	Added detail for left turn lane.
17352	2 of 2	Revised placement of reflective marker.
17355	1 of 4	Added note for county route marker.
17721	2 of 2	Revised depth of conduit under railroad and added note.

REVISIONS
TRAFFIC DESIGN STANDARDS
1986

INDEX NUMBER	SHEET NUMBER	DESCRIPTION
17882	-	Changed from 3 sheets to 4.
17882	1 of 3	Changed to 1 of 4.
17882	2 of 3	Changed to 2 of 4.
17882	3 of 3	Changed to 3 of 4.
17882	4 of 4	Added to show multi-lane facility with Railroad gates.

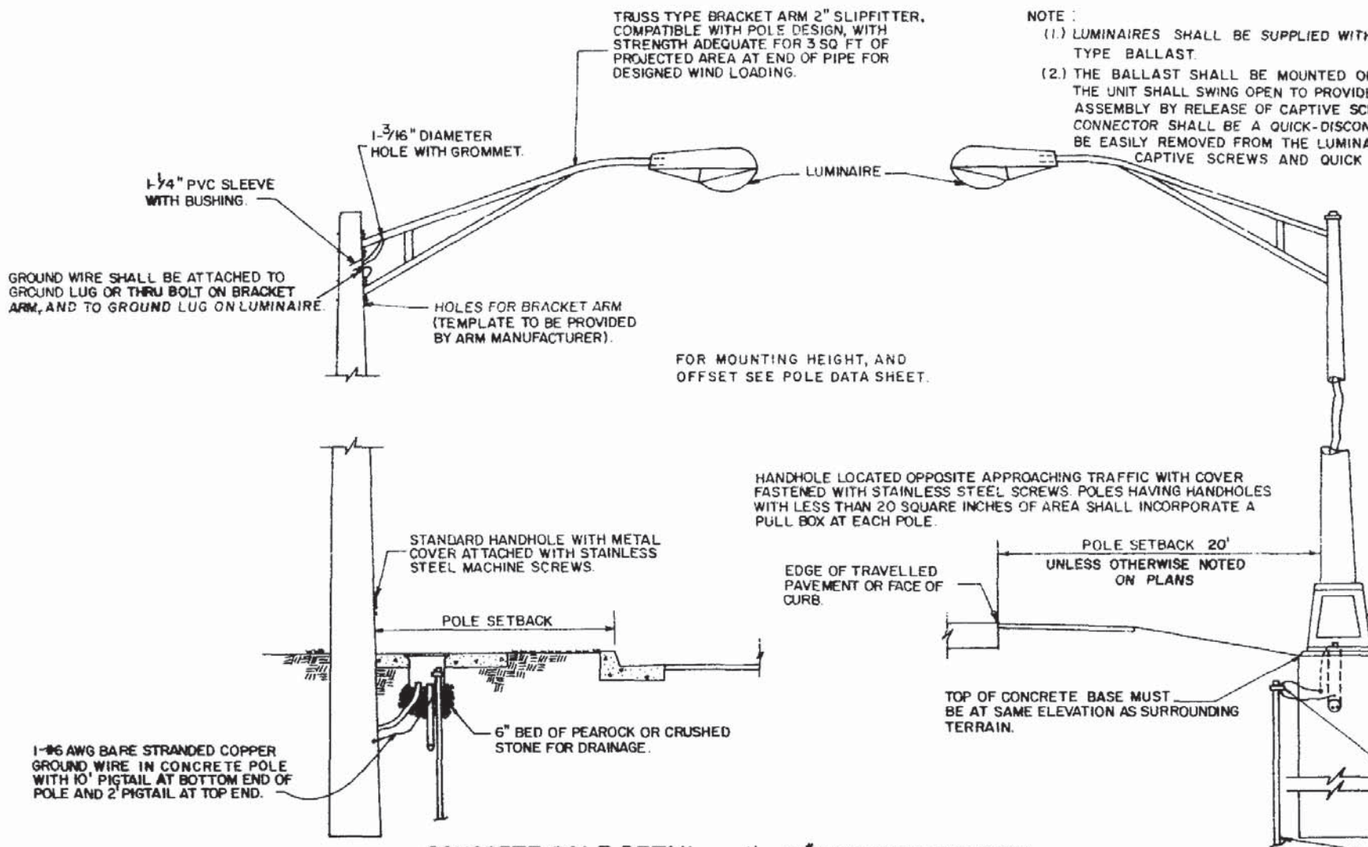

NOTE :

(1.) LUMINAIRES SHALL BE SUPPLIED WITH A MAGNETIC REGULATOR TYPE BALLAST.

(2.) THE BALLAST SHALL BE MOUNTED ON A HINGED DOOR OR PANEL. THE UNIT SHALL SWING OPEN TO PROVIDE ACCESS TO THE BALLAST ASSEMBLY BY RELEASE OF CAPTIVE SCREWS. THE ELECTRICAL CONNECTOR SHALL BE A QUICK-DISCONNECT PLUG. THE UNIT SHALL BE EASILY REMOVED FROM THE LUMINAIRE AFTER RELEASE OF THE CAPTIVE SCREWS AND QUICK DISCONNECT PLUG.

HANDHOLE LOCATED OPPOSITE APPROACHING TRAFFIC WITH COVER FASTENED WITH STAINLESS STEEL SCREWS. POLES HAVING HANDHOLES WITH LESS THAN 20 SQUARE INCHES OF AREA SHALL INCORPORATE A PULL BOX AT EACH POLE.

NOTES:

1) ALLOW ENOUGH SLACK IN ALL WIRES TO ALLOW FUSE HOLDERS, SURGE PROTECTORS AND SPLICES TO BE HANDLED ONE FOOT OUTSIDE POLE OR PULL BOX.

2) A PULL BOX SHALL BE INSTALLED AT EACH CONCRETE POLE LOCATION.

3) ALL MOUNTING HEIGHTS ARE ± 2-1/2 FT. UNLESS OTHERWISE NOTED IN PLANS

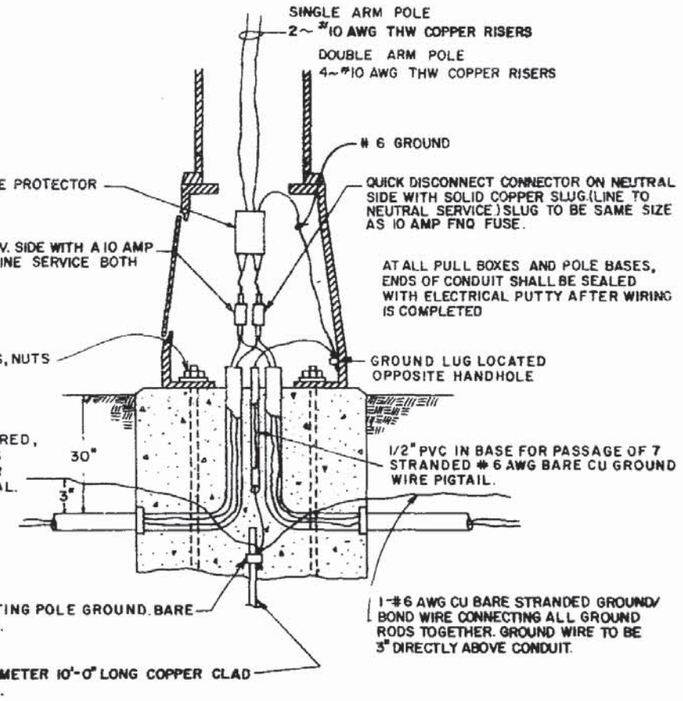

CONCRETE POLE DETAIL

METAL POLE DETAIL

METAL POLE WIRING DETAIL

SURGE PROTECTOR SPECIFICATIONS

1. THE UNIT SHALL WITHSTAND A SURGE CURRENT UP TO 20,000 AMPS, AND REPETITIVE SURGES OF 200 AMPS FOR A MINIMUM OF 10,000 OCCURRENCES.
2. THE UNIT SHALL RESPOND IN LESS THAN 50 NANOSECONDS AND WITHIN THIS TIME HAVE A PEAK CLAMPING VOLTAGE BETTER THAN 1,100 Vrms.
3. THE MAXIMUM ALLOWABLE VOLTAGE THAT CAN PASS CONTINUOUSLY THROUGH THE HOT LEG OF THE PROTECTOR MUST BE LESS THAN 550 Vrms.
4. THE CURRENT DRAIN SHALL BE LESS THAN 100 MICROAMPS.
5. THE UNIT SHALL BE INSULATED 600 V. TO GROUND AND SHALL BE WEATHERPROOF.
6. THE UNIT SHALL NOT ALLOW HOLDOVER CURRENT OR CONDUCTION TO GROUND AFTER THE SURGE ENDS.
7. PROTECTION SHALL BE ACHIEVED FOR BOTH THE 480V. AND NEUTRAL CONDUCTORS WITH THE SURGES BEING PASSED TO GROUND AND NOT TO NEUTRAL.
8. THERE SHALL BE NO DISCHARGE LAG IN THE PROTECTION OF THE 480 V. CONDUCTOR OVER THE NEUTRAL CONDUCTOR.
9. UNDERWRITERS LABORATORY APPROVAL NOT REQUIRED.

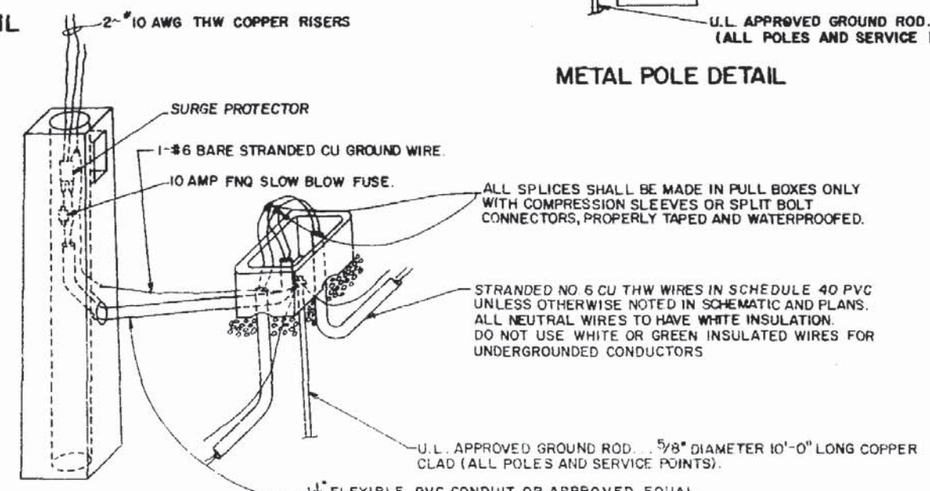

CONCRETE POLE WIRING DETAIL

NOTE :

PULL BOXES SHOULD BE LOCATED 2' MAX. FROM CONCRETE POLE UNLESS OTHERWISE DIRECTED BY THE PROJECT ENGINEER.

FLORIDA DEPARTMENT OF TRANSPORTATION
TRAFFIC DESIGN

CONVENTIONAL POLE DETAILS

DATE	REVISIONS		INITIALS	DATES
9-9-81	ADDED POLE SETBACK AND NOTES TO QUICK DISCONNECT CONNECTOR, REVISED SURGE PROTECTOR & FUSE	Designed by	E.K.	8-78
		Checked by		
7-13-83	GENERAL NOTE REVS.	Quantities by		
8-84	ADDED LUMINAIRE NOTE	Checked by		
9-84	REVISED NOTE CONC. POLE & METAL POLE DETAILS	Supervised by	LESTER JONES	
9-85	ADDED GROUND WIRE SIZE FOR SURGE PROTECTOR			

Approved by D C Mallett
STATE DESIGN ENGINEER - RDWY

DRAWING NO. 1 OF 1

INDEX NO. 17500

1) GROUND RODS SHALL HAVE A RESISTANCE TO GROUND NOT TO EXCEED 25 OHMS. WHERE THE RESISTANCE IS NOT AS LOW AS 25 OHMS, TWO OR MORE GROUND RODS CONNECTED IN PARALLEL SHALL BE USED. CONTRACTOR SHALL HAVE NECESSARY TEST EQUIPMENT (CURRENT CALIBRATION CERTIFICATE REQUIRED) AT FINAL INSPECTION TO INSURE ACCEPTABILITY OF GROUNDING SYSTEM. TOTAL GROUNDING SYSTEM NOT TO EXCEED 10 OHMS.

2) THE CONTRACTOR SHALL BE RESPONSIBLE FOR CONTACTING ALL UTILITY COMPANIES PRIOR TO ANY UNDERGROUND WORK. THE UTILITY COMPANY WILL LOCATE AND IDENTIFY THEIR FACILITIES.

3) CONTRACTOR SHALL DETERMINE THE SERVICE REQUIRED DATE FOR THE POWER COMPANY TRANSFORMER INSTALLATION AT THE PRE-CONSTRUCTION CONFERENCE.

4) THE POWER COMPANY RESERVES THE RIGHT TO INSTALL THE RISER, SWITCH GEAR AND WEATHERHEAD ON POWER COMPANY POLES AT THE EXPENSE OF THE CONTRACTOR. CONTACT THE POWER COMPANY FOR COST OR FOR AUTHORIZATION FOR AN ALTERNATE PROCEDURE.

5) ANY DAMAGED PORTIONS OF GALVANIZED STEEL POLES AND BRACKET ARMS SHALL BE PAINTED IN ACCORDANCE WITH SECTION 562 OF THE STANDARD SPECIFICATIONS.

6) POLES, BRACKET ARMS AND FRANGIBLE DEVICES SHALL BE DESIGNED IN ACCORDANCE WITH THE DESIGN CRITERIA, AS INDICATED IN THE PLANS AND USING THE APPLICABLE EQUATIONS FOUND IN "STANDARD SPECIFICATIONS FOR STRUCTURAL SUPPORTS FOR HIGHWAY SIGNS, LUMINAIRES AND TRAFFIC SIGNALS" PUBLISHED BY A. A. S. H. T. O. DATED 1975.

7) THE LUMINAIRE MANUFACTURER SHALL PLACE A PERMANENT TAG ON THE LUMINAIRE HOUSING ON WHICH IS IMPRINTED THE FOLLOWING INFORMATION: WATTAGE, BALLAST TYPE, LAMP SHOWN ON DESIGN PLANS, LAMP SETTING (POSITION IN LUMINAIRE), IES LIGHT DISTRIBUTION WITH THIS LAMP IN THE POSITION SPECIFIED, INPUT VOLTAGE AND POWER FACTOR. LUMINAIRE PHOTOMETRIC SUBMITTALS REQUIRED.

8) BEFORE FINAL ACCEPTANCE, CONTRACTOR SHALL PROVIDE 2 SETS OF FULL SIZE AS BUILT PLANS TO THE MAINTAINING AGENCY.

9) CONDUIT ROUTING SHALL BE POLE TO POLE, MAINTAINING POLE SETBACK DISTANCE FROM EDGE OF PAVEMENT. ANY CABLE ROUTING IN LOCATIONS WHERE GUARDRAIL IS PROPOSED SHALL BE 2'-0" IN FRONT OF THE STANDARD GUARDRAIL POSITION.

10) POLE POSITIONS AND CONDUIT ROUTING MAY BE ADJUSTED, AS APPROVED BY THE ENGINEER, TO PREVENT CONFLICTS WITH UTILITY AND DRAINAGE STRUCTURES NOT INDICATED, AND PREVENT GUARDRAIL POST CONFLICT WITH UNDERGROUND LIGHTING CIRCUITS.

11) WHERE GUARDRAIL IS CONSTRUCTED, THE POLES SHALL BE PLACED A MINIMUM OF 4' BEHIND THE FACE OF GUARDRAIL.

12) POLE FOUNDATION INSTALLATIONS SHALL BE BACKFILLED TO THE TOP OF THE FOUNDATION COMPACTED TO A FIRM, STABLE CONDITION APPROXIMATELY EQUAL TO THAT OF THE ADJACENT SOIL. THE FILL SHALL CONFORM TO EXISTING GRADE AND BE FULLY SODED.

13) THE WIRES AT THE POLE HANDHOLE AND PULL BOXES SHALL BE LOOPED UP IN THE POLE AND PULL BOXES WITH SUFFICIENT LENGTH TO COMPLETELY REMOVE CONNECTORS TO THE OUTSIDE OF HANDHOLE AND PULL BOXES TO MAKE CONNECTORS ACCESSIBLE FOR CHANGING FUSES AND TROUBLE SHOOTING THE SYSTEM.

14) NEUTRAL WIRES TO HAVE WHITE INSULATION. DO NOT USE WHITE OR GREEN INSULATED WIRES FOR UNDERGROUNDED CONDUCTORS.

15) UNLESS OTHERWISE SPECIFIED, ALL CABLE SHALL BE SINGLE CONDUCTOR, 98 PERCENT CONDUCTIVITY STRANDED COPPER, WITH THW INSULATION.

16) ALL SPLICES SHALL BE MADE IN PULL BOXES OR THE POLE BASE. NO SPLICES SHALL BE MADE INSIDE THE CONDUIT.

17) ALL EXPOSED OR SURFACED MOUNTED CONDUIT SHALL BE RIGID OR INTERMEDIATE METAL. THESE EXPOSED RUNS OF CONDUIT SHALL BE PROVIDED WITH EITHER EXPANSION JOINTS OR FLEXIBLE METAL CONDUIT SECTIONS ADEQUATE TO TAKE CARE OF VIBRATIONS AND THERMAL EXPANSIONS. ALL METAL CONDUIT SHALL BE GROUNDED. STEEL CONDUIT SHALL BE HOT DIPPED GALVANIZED.

18) ALL CONDUIT THAT WILL REMAIN EMPTY AS SPARES SHALL BE MANDREL TESTED, CLEANED INSIDE AND BOTH ENDS CAPPED. LEAVE THE CORROSION RESISTANT PULL/DRAG WIRE AND PLACE DUCT MARKERS, OR PULL BOXES TO MARK THE LOCATION OF THE ENDS OF THE CONDUIT.

19) PULL BOXES SHALL BE LOCATED AT ENDS OF CONDUIT CROSSING ROADWAYS, AND AS NECESSARY FOR THE COMPLETION OF THE PROJECT.

20) THESE PLANS REPRESENT MINIMUM ACCEPTABLE CRITERIA. THE INSPECTION PER THESE DRAWINGS REPRESENT THE MINIMUM BASE OF ACCEPTANCE.

21) ALL MATERIAL, UNLESS OTHERWISE SPECIFIED, SHALL BE UNDERWRITERS LABORATORY APPROVED.

22) PRIOR TO ANY EQUIPMENT ORDER, THE CONTRACTOR SHALL SUBMIT FOR APPROVAL, EQUIPMENT SPECIFICATIONS OR DESIGN DATA FOR ALL MATERIAL PROPOSED FOR THE PROJECT AND MUST INCLUDE SPECIFICALLY:

A) LUMINAIRE PHOTOMETRICS
B) POLE STRENGTH CALCULATIONS
C) POLE FRANGIBILITY TEST RESULTS
D) BOLT SPECIFICATIONS AND BOLT CIRCLE DIAMETER

23) SEVEN(7) COPIES OF SHOP DRAWINGS AND DESIGN DATA FOR HIGHWAY LIGHTING EQUIPMENT SHALL BE SUBMITTED TO THE STATE TRAFFIC PLANS AND STANDARDS ENGINEER AT THE FOLLOWING ADDRESS WITH A COPY OF THE SUBMITTAL LETTER SENT TO THE DEPARTMENTS RESIDENT CONSTRUCTION ENGINEER IN CHARGE OF THE PROJECT. ALLOW A 30 DAY TURN AROUND FOR SHOP DRAWINGS.

STATE TRAFFIC PLANS AND STANDARDS ENGINEER
DEPARTMENT OF TRANSPORTATION
HAYDON BURNS BUILDING M.S. 32
TALLAHASSEE, FLORIDA 32301

BREAKAWAY FEATURE

ALL CONVENTIONAL MOUNTING HEIGHT POLES SHALL BE MOUNTED ON A FRANGIBLE METAL BASE OR SYSTEM OF BREAKAWAY COUPLINGS. IF COUPLINGS ARE USED, ONE COUPLING SHALL BE PROVIDED FOR EACH ANCHOR BOLT CONNECTION. THE ONLY CONTINUOUS CONNECTION OF THE POLE TO THE FOUNDATION AT EACH ANCHOR BOLT SHALL BE PROVIDED BY THE COUPLINGS. THE AREA BETWEEN THE TOP OF THE POLE FOUNDATION AND THE BASE OF THE POLE INCLUDING THE COUPLINGS SHALL BE ENCLOSED WITH A NON-STRUCTURAL ALUMINUM SKIRT.

IF A FRANGIBLE METAL BASE IS USED, IT SHALL BE ONE PIECE AND BE DESIGNED TO BREAKAWAY WITHOUT THE AID OF ANY SLIPPING OR SLIDING SURFACES.

THE DESIGN OF THE BREAKAWAY FEATURE SHALL BE IN ACCORDANCE WITH THE BREAKAWAY PERFORMANCE REQUIREMENTS OF SECTION 7, "STANDARD SPECIFICATIONS FOR STRUCTURAL SUPPORTS FOR HIGHWAY SIGNS, LUMINAIRES AND TRAFFIC SIGNALS", A. A. S. H. T. O., COPYRIGHT 1975. THE CONTRACTOR (SUPPLIER) SHALL SUBMIT WITH EQUIPMENT SUBMITTALS, COPIES OF TEST REPORTS AS EVIDENCE THAT THE BREAKAWAY FEATURE HAS UNDERGONE FULL SCALE DYNAMIC TESTING WITH A CHANGE IN MOMENTUM OF 750 POUND-SECONDS OR LESS AND CALCULATIONS TO VERIFY THE DESIGN WILL MEET A. A. S. H. T. O. WIND LOADINGS SPECIFIED IN THE CONTRACT PLANS. NO POLES ARE TO BE INSTALLED PRIOR TO DEPARTMENT APPROVAL OF THE SUBMITTAL DATA.

POLES MOUNTED ON BARRIER WALL OR BEHIND BRIDGE RAIL ARE EXEMPT FROM THE ABOVE FRANGIBILITY REQUIREMENTS.

FLORIDA DEPARTMENT OF TRANSPORTATION
TRAFFIC DESIGN

HIGHWAY LIGHTING GENERAL NOTES

DATE	REVISIONS
7-13-83	CHANGED NOTE NO. 23
8-84	REVISED NOTES 1, 12, 14, & 17

	INITIALS	DATES
Designed by	G. K	4-25-78
Checked by		
Quantities by		
Checked by		
Supervised by	LESTER JONES	

Approved by _____
STATE DESIGN ENGINEER - RDWY

DRAWING NO. 1 OF 1
INDEX NO. 17501

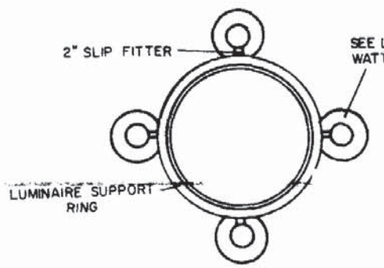



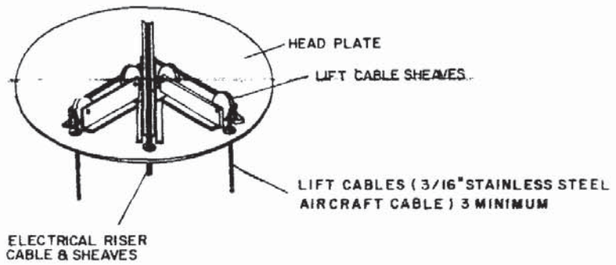

SCHEMATIC OF REMOTE AUXILIARY POWER UNIT

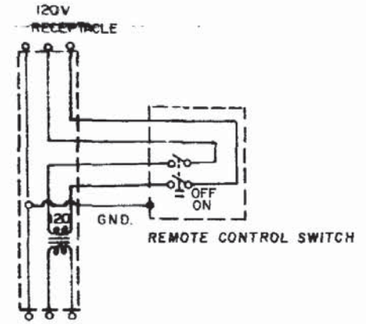

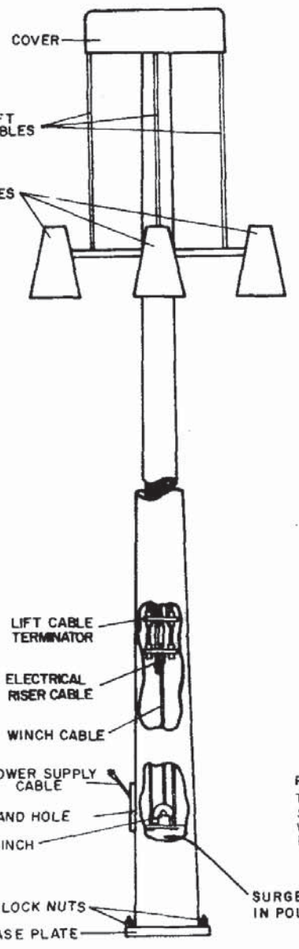

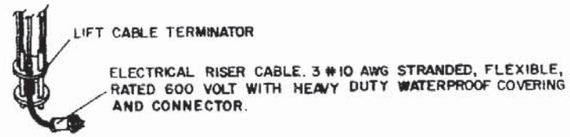

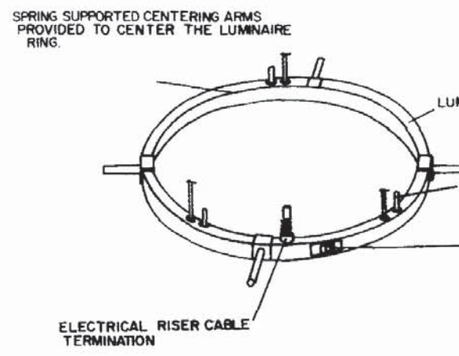

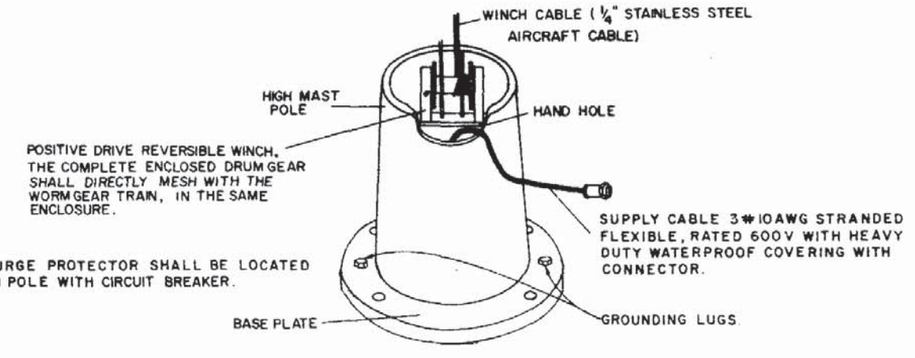

FLORIDA DEPARTMENT OF TRANSPORTATION
TRAFFIC DESIGN

HIGHMAST LIGHTING DETAILS

REVISIONS		
DATE	INITIALS	DESCRIPTION
8-84	LTB	Changed Conductor Size On Riser & Supply Cable Changed Length of Control Cable
8-84	LTB	Revised Surge Protector Note

	INITIALS	DATES
Designed by		
Checked by		
Quantities by		
Checked by		
Supervised by	LESTER JONES	

Approved by _____
STATE DESIGN ENGINEER-RDWY

DRAWING NO. 1 OF 3

INDEX NO 17502

LUMINAIRE SPECIFICATIONS

THE REFLECTOR WITH ITS ALUMINUM COVER SHALL BE FIRMLY ATTACHED TO A CAST RING. THIS RING SHALL HAVE KEYHOLE SLOTS IN ITS UPPER SURFACE SUCH THAT THE REFLECTOR/REFRACTOR ASSEMBLY MAY BE READILY ATTACHED TO, OR DETACHED FROM, THE LUMINAIRE BRACKET ENTRY AND LAMP SUPPORT ASSEMBLY WITHOUT COMPLETELY REMOVING THE SUPPORT BOLTS.

EACH LUMINAIRE SHALL CONTAIN AN INTEGRAL AUTO-REGULATOR TYPE BALLAST CONNECTED FOR 480 VOLTS INPUT ± 10% AND A POWER FACTOR OF MORE THAN 90%. THE LUMINAIRE BALLAST SHALL BE ENCLOSED WITHIN AN ALUMINUM HOUSING WHICH INTEGRALLY ATTACHES TO THE LUMINAIRE BRACKET ENTRY AND LAMP SUPPORT ASSEMBLY. IT SHALL BE READILY REMOVEABLE WITHOUT REMOVING THE LUMINAIRE FROM THE BRACKET ARM.

THE LUMINAIRE SHALL BE ATTACHED TO THE BRACKET ARM BY MEANS OF A BRACKET ENTRY AND LAMP SUPPORT ASSEMBLY. THE ASSEMBLY SHALL INCLUDE A SIDE ENTRY SLIPFITTER DESIGNED FOR TWO (2) INCH PIPE WITH PROVISION FOR 3° ADJUSTMENT FOR LEVELING THE LUMINAIRE. AN ENCLOSED TERMINAL BLOCK SHALL BE INCLUDED SUCH THAT ALL ELECTRICAL CONNECTIONS SHALL BE PROTECTED FROM EXPOSURE TO WEATHER.

ALL ELECTRICAL CONNECTIONS SHALL BE MADE WATERPROOF OR BE MADE INSIDE A WEATHER RESISTANT ENCLOSURE. ALL LUMINAIRES SHALL BE ANSI/IES LIGHT DISTRIBUTION AS INDICATED IN PLANS. EACH LUMINAIRE SHALL BE LABELED WITH A PERMANENT LABEL WHICH STATES THE TYPE OF LAMP, VOLTAGE INPUT, POWER INPUT, POWER FACTOR, BALLAST TYPE, SOCKET POSITION, ANSI/IES LIGHT DISTRIBUTION, AND SUCH OTHER CATALOG INFORMATION THAT A COMPLETE REPLACEMENT CAN BE READILY ORDERED.

THE CONTRACTORS ATTENTION IS DIRECTED TO THOSE PLAN SHEETS DETAILING THE MOUNTING OF LUMINAIRES AT THE POLE TOP. PARTICULAR ATTENTION IS DIRECTED TO ALIGNMENT OF LUMINAIRE LIGHT DISTRIBUTIONS. SPECIAL ATTENTION MUST BE EXERCISED IN THE PHYSICAL ALIGNMENT OF THESE LUMINAIRES TO INSURE THAT THE APPROVED PHOTOMETRIC LAYOUT IS PHYSICALLY PRODUCED AT EACH LIGHTING STANDARD IN THE FIELD. A MARKING SHALL BE PLACED ON THE EXTERNAL FACE OF THE REFRACTOR TO IMPLEMENT VISUAL INSPECTION OF ALIGNMENT. THE MARKING SHALL CORRESPOND TO THE 0° AXIS OF THE REFRACTOR.

FOOTING

THE HIGH MAST FOUNDATIONS SHALL BE CONSTRUCTED IN ACCORDANCE WITH THE DETAILS SHOWN IN THE PLANS.

ANCHOR BOLTS PER MANUFACTURERS SPECIFICATIONS. SUBMITTALS SHALL BE SUPPLIED TO THE LIGHTING ENGINEER PRIOR TO PURCHASE.

ONE LEVELING NUT, ONE HOLD-DOWN NUT, AND ONE LOCKING/JAM NUT SHALL BE SUPPLIED PER ANCHOR BOLT. ALL SMALL METAL PARTS, (NUTS, SCREWS, WASHERS, ETC.) SHALL BE RUSTPROOFED EITHER BY GALVANIZING PER ASTM A-143 OR BY THE NATURE OF THE MATERIAL USED IN THEIR FABRICATION.

LOWERING SYSTEM SPECIFICATIONS

THE LOWERING SYSTEM SHALL CONSIST OF THE FOLLOWING:

A. HEAD FRAME AND COVER
B. LUMINAIRE RING
C. CABLES
D. WINCH
E. PORTABLE POWER UNIT (1 PER PROJECT)

THE HEAD FRAME UNIT SHALL RIGIDLY MATE THE TOP OF THE POLE TO THE HEAD FRAME PLATFORM. THIS PLATFORM WITH ITS ASSOCIATED SHEAVES, ETC. SHALL BE COVERED AND RAINTIGHT. THE HEAD FRAME STRUCTURE SHALL BE ZINC COATED STEEL, ATTACHED TO THE POLE BY MEANS OF A STEEL SLIPFITTER. HEAD FRAME SHALL ENCOMPASS SIX FIVE (5) INCH NOMINAL STEEL CABLE SHEAVES GROOVED TO THE EXACT CABLE DIAMETER, FOR 180° CABLE BEARING SURFACE. THE SHEAVE SHALL BE ZINC ELECTROPLATED TO ASTM 164 AND DIPPED IN YELLOW CHROMATE FOR CORROSION RESISTANCE. BEARINGS AND CABLE KEEPERS SHALL HAVE PERMANENT LUBRICATION. THREE (3) STAINLESS STEEL 7X19 AIRCRAFT CABLES OF 3/16 INCH OR GREATER DIAMETER SHALL BE PROVIDED.

THE POWER RISER CABLE SHALL BE ATTACHED TO THE LUMINAIRE RING WITH A WATERPROOF CONNECTOR CAPABLE OF WITHSTANDING THE PULL OF THE WEIGHT OF THE POWER RISER CABLE. WHERE THE WIRE ROPES ARE REQUIRED TO BEND OVER SHEAVES OR OVER THE WINCH DRUM, THE MAXIMUM WORKING STRESS IN THE OUTER FIBERS OF WIRE ROPE SHALL NOT EXCEED ONE FIFTH (1/5) THE WIRE ROPE MANUFACTURER'S RATED ULTIMATE STRESS. SUBMITTALS MUST BE PROVIDED TO THE STATE LIGHTING ENGINEER WHICH CLEARLY STATE THE WIRE ROPE ULTIMATE STRESS. DRUM DESIGN SHALL CAUSE LEVEL WIND OF WIRE ROPE. THE POWER CORD SHALL TRAVEL ON SHEAVE (S) OR A COMBINATION OF ROLLERS PROVIDING A RADIUS FOR THE CORD OF SIX (6) INCHES OR LARGER. EACH END OF THE SHEAVE (S) OR ROLLERS SHALL HAVE A KEEPER TO PREVENT THE CABLE FROM JUMPING OUT OF THE ROLLER TRACK.

THE HEAD FRAME SHALL ALSO INCLUDE THREE (3) LATCHING DEVICES TO SUPPORT THE LUMINAIRE RING ASSEMBLY WHEN THE LOWERING DEVICE IS NOT IN OPERATION. THE LATCHES SHALL BE ACTUATED BY ALTERNATE RAISING AND LOWERING OF THE HOISTING CABLES. LOCKING OF LUMINAIRE RING SHALL BE SIGNALED BY INDICATORS VISIBLE FROM GROUND. ALL MOVING PARTS OF THE LATCH MECHANISM SHALL BE SERVICEABLE FROM THE GROUND. EACH OF THE THREE LATCHES SHALL BE STRONG ENOUGH, BY ITSELF, TO SUPPORT TWICE THE WEIGHT OF THE RING AND ALL THE LUMINAIRES. LATCHING MECHANISMS WHICH DEPEND PRIMARILY UPON SPRING OPERATION OR CONTAIN DISSIMILAR METALS ARE NOT ACCEPTABLE. THE LATCHING MECHANISM SHALL NOT REQUIRE ADJUSTMENT AFTER THE ORIGINAL INSTALLATION.

THE LUMINAIRE RING SHALL BE CONSTRUCTED OF A MINIMUM OF 6" X 2" X 7 GAUGE HOT DIPPED GALVANIZED ASTM 386 CLASS "B" STEEL CHANNEL WITH THE APPROPRIATE NUMBER OF TWO (2) INCH STEEL PIPE MOUNTING ARMS. THE LUMINAIRE RING SHALL BE PREWIRED WITH TYPE "W" OR SPECIALLY REINFORCED TYPE "SO" POWER CABLE WITH SUITABLE CONDUCTOR QUANTITY AND SIZE FOR PROPER OPERATION AND TYPE "ST" DISTRIBUTION WIRING WITH INSULATION SUITABLE FOR AT LEAST 105° C. ALL POWER CABLES SHOULD BE ATTACHED TO THE ALUMINUM WEATHERTIGHT WIRING CHAMBER WITH WEATHERTIGHT CABLE CONNECTORS. A 600 VOLT TERMINAL BLOCK, COMPLETELY PREWIRED SHALL BE INCLUDED IN THE WEATHERTIGHT WIRING CHAMBER. A WEATHER-TIGHT TWISTLOCK POWER INLET SHALL BE PROVIDED ON THE LUMINAIRE RING TO ALLOW TESTING OF THE LUMINAIRE WHILE IN THE LOWERED POSITION. THE POWER INLET SHALL FACE AWAY FROM THE POLE FOR EASY ACCESS.

THE ULTIMATE SUPPORT OF THE LUMINAIRE RING SHALL NOT BE DEPENDENT UPON THE LOWERING AND RAISING CABLES.

THE SYSTEM SHALL BE PROVIDED WITH CIRCUIT-BREAKER SWITCHES AND TWISTLOCK DISCONNECTS IN THE POLE BASE. RAISING SPEED OF LUMINAIRE RING SHALL BE A MINIMUM OF TWELVE (12) FEET PER MINUTE.

THE WINCH SHALL BE A REVERSIBLE WORM GEAR SELF LOCKING TYPE WITH AN INTEGRAL FRICTION DRAG BRAKE TO PREVENT FREESPOOLING. THE WINCH SHALL BE DESIGNED FOR HAND OPERATION OR FOR OPERATION BY MEANS OF A 1/2" HEAVY DUTY REVERSING ELECTRIC DRILL MOTOR, REMOTE CONTROLLED TO ENABLE THE OPERATOR TO STAND TWENTY FIVE (25) FT. FROM THE POLE. STAINLESS STEEL 7 X 19 AIRCRAFT CABLES OF 1/4 INCH OR GREATER DIAMETER EQUAL TO MIL-W-5424 SHALL BE SUPPLIED ON THE WINCH. THE WINCH SHALL BE PROVIDED WITH KEEPERS ABOVE THE DRUM TO FORCE THE CABLE AWAY FROM THE ENDS OF THE DRUM FOR SPOOLING. THE DRUM SHALL HAVE A WIRE GUARD TO PREVENT THE CABLE FROM COMING OFF.

THE WINCH SHALL BE MOUNTED IN SUCH A WAY THAT THE CABLE TERMINATOR AND THE RISER CABLE CONNECTOR MAY BE REACHED AND WORKED ON BY A PERSON WITH HIS ARM THROUGH THE HANDHOLE.

ROLLER CONTACT SPRING-LOADED CENTERING ARMS SHALL BE PROVIDED TO CENTER THE LUMINAIRE RING WHILE ASCENDING OR DESCENDING THE POLE. THE ROLLERS FOR THE CENTERING ARM SHALL BE MADE OF A WATER RESISTANT NON-MARKING COMPOSITION MATERIAL. ALL SHAFTS AND WASHERS SHALL BE #304 STAINLESS STEEL. THE SPRING-LOADING MECHANISM SHALL CONSIST OF AN OIL-TEMPERED STEEL COMPRESSION SPRING OVER AN ALUMINUM ROD. THE ROLLERS SHALL BE IN CONTACT WITH THE POLE AT ALL TIMES.

POLE SPECIFICATIONS

THE POLE SHAFT MAY BE JOINTED OR SINGLE PIECE, POLYGON OR ROUND, HIGH STRENGTH STEEL HAVING A MINIMUM YIELD STRENGTH OF 50 KSI. ALL MATERIAL SHALL BE SINGLE THICKNESS STEEL PLATE WITH NO LAMINATIONS. STEEL SHALL BE AS SPECIFIED.

ALL POLES SHALL BE EQUIPPED WITH A REINFORCED HANDHOLE APPROXIMATELY 1 0' ABOVE THE BASE PLATE. THE HANDHOLE SHALL BE TEN (10) INCHES WIDE BY TWENTY (20) INCHES HIGH MINIMUM.

ALL POLES AND HARDWARE WILL BE ADEQUATELY PACKED TO ASSURE PROTECTION TO THE FINISH DURING SHIPPING AND HANDLING, POLES SHALL NOT BE SHIPPED PRE-ASSEMBLED.

DRAWINGS SHALL BE PROVIDED WITH THE EQUIPMENT WHICH SHOW ASSEMBLY SEQUENCE, LIFT POINT, AND RECOMMENDED ERECTION PROCEDURE. A PERMANENT DECAL OR CARD SHALL BE FIXED ON THE INSIDE OF THE HANDHOLE COVER WHICH DESCRIBES THE SEQUENCE FOR LOWERING THE LUMINAIRES AND THE CAUTIONS.

THE PROPORTIONING OF WELD DETAILS AND THE OPERATION OF WELDING SHALL BE IN ACCORDANCE WITH THE CURRENT EDITION OF THE AASHTO STANDARD SPECIFICATIONS FOR WELDING OF STRUCTURAL STEEL HIGHWAY BRIDGES, AND THE REFERENCED AMERICAN WELDING SOCIETY STRUCTURAL WELDING CODE.

SHOP DRILL TWO (2) 5/8" DIAMETER HOLES 180 DEGREES APART THROUGH TOTAL THICKNESS OF BASE PLATE. TAP TOP OF HOLE FOR 5/8" X 3/4" 11 NCZ STAINLESS STEEL HEXHEAD CAP SCREW.

FINISHED POLES SHALL HAVE A PROTECTIVE COATING OF HOT DIP GALVANIZING APPLIED IN ACCORDANCE WITH ASTM-A 123 OR SHALL BE FABRICATED USING ASTM-A 588 ATMOSPHERIC CORROSION RESISTANT STEEL OR ASTM-A 595 GRADE "C" WEATHER RESISTANT STEEL OR ANY OTHER STEELS HAVING CORROSION RESISTANT PROPERTIES EQUAL TO OR GREATER THAN ASTM-A 588 OR A-595 GRADE "C"

NOTE: IT IS THE RESPONSIBILITY OF THE CONTRACTOR TO COORDINATE THE ANCHOR BOLT DESIGN WITH FOUNDATION DESIGN.

FLORIDA DEPARTMENT OF TRANSPORTATION
TRAFFIC DESIGN
HIGHMAST LIGHTING DETAILS

DATE	REVISIONS
9-9-81	REMOVED CONSTANT WATTAGE FROM 2ND NOTE ON LUMINAIRE SPECIFICATIONS
8-84	REVISED NOTES ON LOWERING SPECIFICATIONS
8-84	ADDED POLE FABRICATION NOTE

	INITIALS	DATES
Designed by	G.K.	8-78
Checked by		
Quantities by		
Checked by		
Supervised by	LESTER JONES	

Approved by Jc Goddard
STATE DESIGN ENGINEER-RDWY

DRAWING NO. 2 OF 3
INDEX NO. 17502

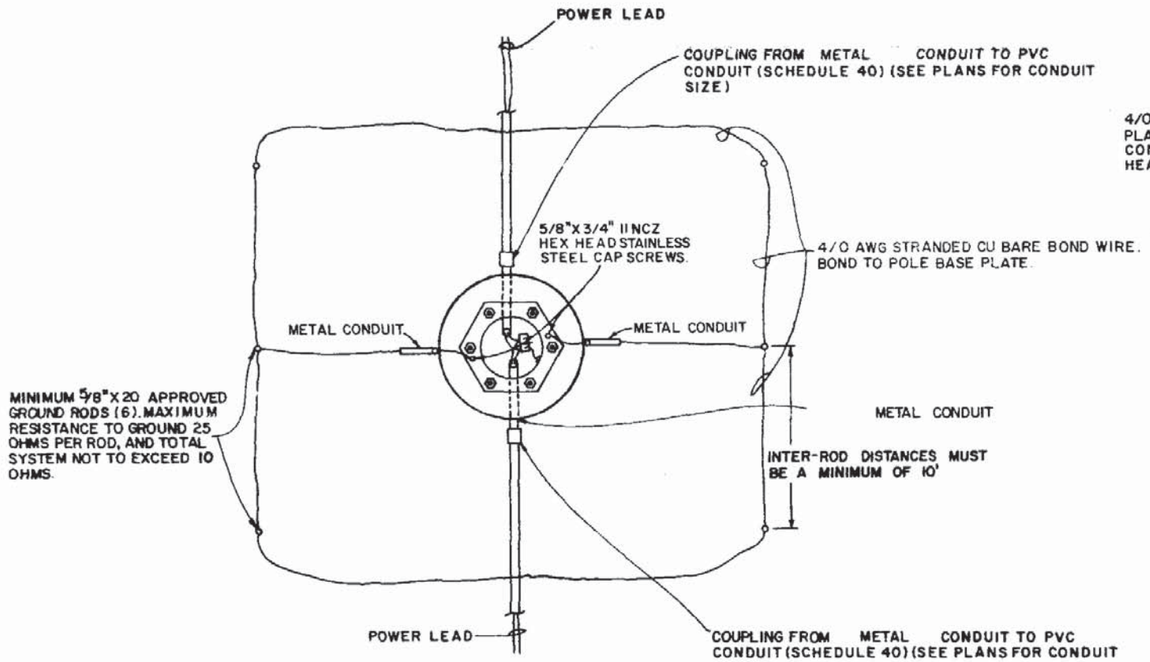

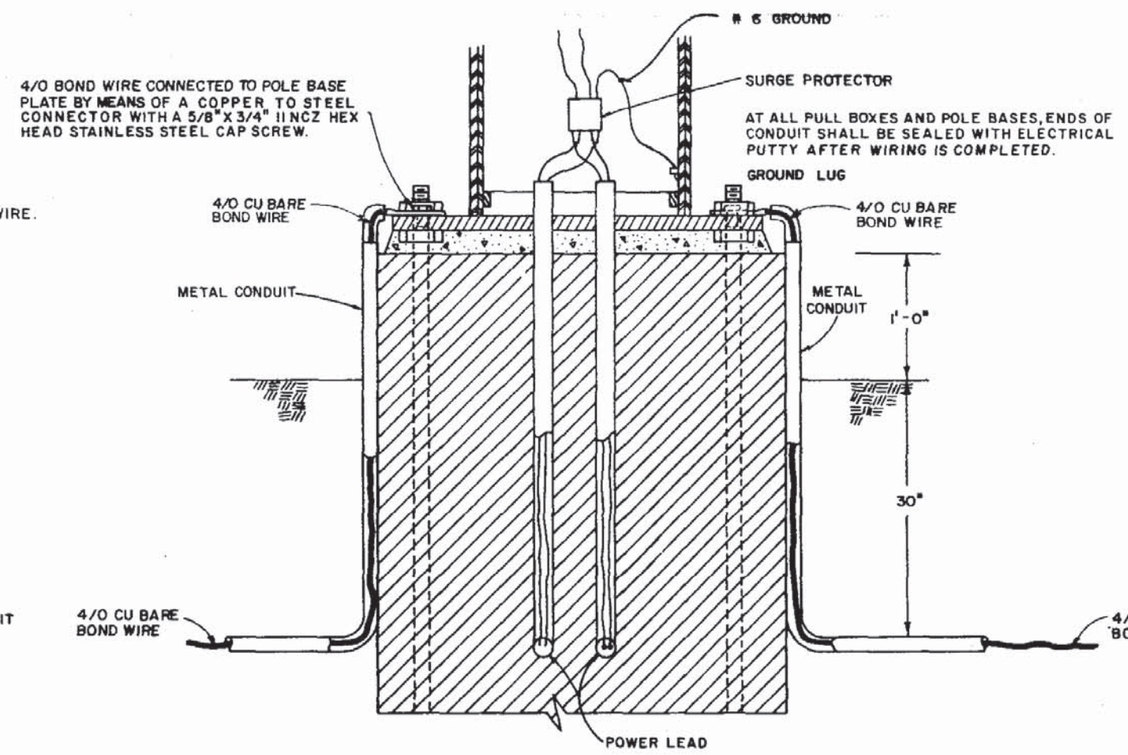

FLORIDA DEPARTMENT OF TRANSPORTATION
TRAFFIC DESIGN

HIGHMAST LIGHTING DETAILS

DATE	REVISIONS
9-9-81	CHANGED GROUND WIRE, & OHMS. ADDED INTER-ROD NOTE. REMOVED SURGE PROTECTOR SPECIFICATIONS
8-84	REVISED CONDUIT, GROUND ROD AND NOTES.
9-85	ADDED GROUND WIRE SIZE FOR SURGE PROTECTOR

	INITIALS	DATES
Designed by	G.K.	8-78
Checked by		
Quantities by		
Checked by		
Supervised by	LESTER JONES	

Approved by _____
STATE DESIGN ENGINEER - RDWY

DRAWING NO.	INDEX NO.
3 OF 3	17502

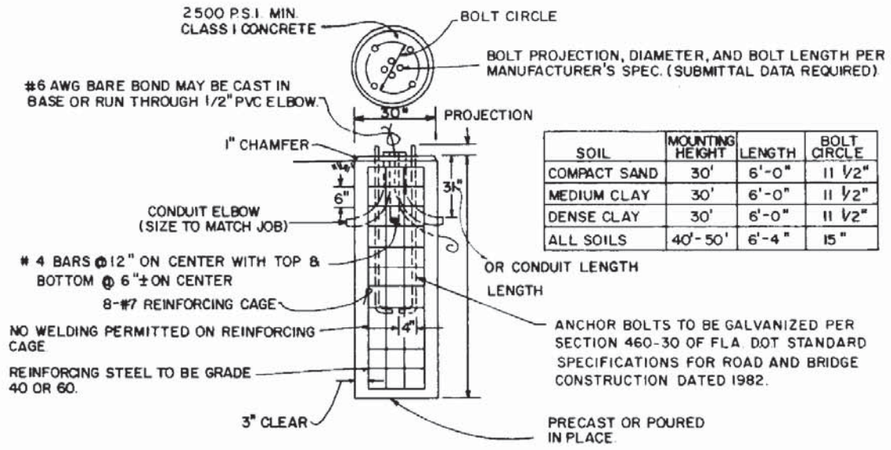

SOIL	MOUNTING HEIGHT	LENGTH	BOLT CIRCLE
COMPACT SAND	30'	6'-0"	11 1/2"
MEDIUM CLAY	30'	6'-0"	11 1/2"
DENSE CLAY	30'	6'-0"	11 1/2"
ALL SOILS	40'-50'	6'-4"	15"

METAL POLE CONCRETE FOUNDATION DETAIL

SCREW TYPE FOUNDATION SPECIFICATIONS

1) THE FOUNDATION SHAFT AND BASE PLATE SHALL BE ASTM A-36 STRUCTURAL STEEL, OR BETTER.

2) THE ANCHOR BOLTS SHALL BE ASTM A-325, OR BETTER.

3) ALL WELDS SHALL BE SUFFICIENT TO WITHSTAND 10,000 FT.-LBS. OF TORQUE, APPLIED ABOUT THE AXIS OF THE FOUNDATION.

4) THE FOUNDATION SHALL HAVE A HANDHOLE IN THE BASE PLATE AT LEAST 6" IN DIAMETER.

5) THE BASE PLATE SHALL BE NOTCHED TO INDICATE THE ORIENTATION OF THE SHAFT CABLEWAYS.

6) DRAINAGE SHALL BE PROVIDED IN THE BOTTOM OF THE FOUNDATION BY MEANS OF AN OPENING OF AT LEAST 3 SQUARE INCHES.

7) THE FOUNDATION SHALL BE DESIGNED FOR INSTALLATION USING A RIGHT HAND TURNING MOVEMENT WITH A SLIGHT DOWN PRESSURE. THE MAXIMUM INSTALLATION TORQUE SHALL NOT EXCEED 10,000 FT.-LBS. OR BE LESS THAN 3,500 FT.-LBS.

8) THE WHOLE FOUNDATION SHALL BE HOT DIP GALVANIZED AFTER FABRICATION TO ASTM A-123.

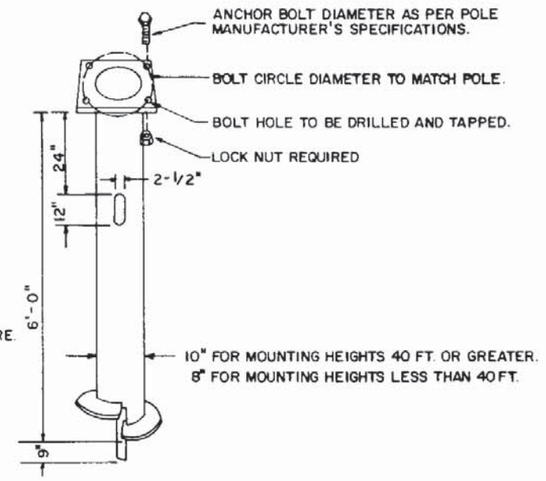

SCREW TYPE FOUNDATION DETAIL

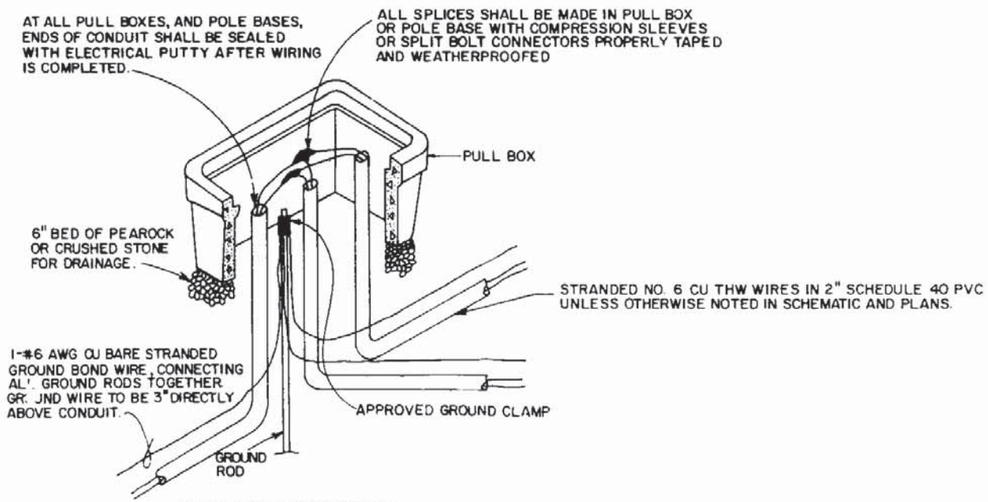

PULL BOX WIRING DETAIL

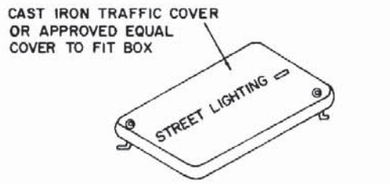

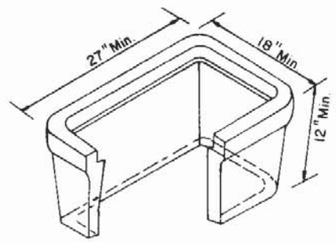

CONCRETE PULL BOX DETAIL

1.) PULL BOXES SHALL BE CONCRETE WITH CAST IRON COVER OR APPROVED EQUAL.

2.) PULL BOX SHALL BE DESIGNED AND TESTED TO MEET AASHTO H-10 LOADING 10,000 # SINGLE AXLE LOAD OVER ANY 10" X 10" AREA COVER TO BE MARKED STREET "LIGHTING."

3.) BOXES MAY BE NESTED FOR DEEP CONDUIT AND FOR MORE WORKING ROOM.

FLORIDA DEPARTMENT OF TRANSPORTATION
TRAFFIC DESIGN
ROADWAY LIGHTING DETAILS

DATE	REVISIONS		INITIALS	DATES
9-9-81	REMOVED SPLICING KIT NOTE ADDED ABOVE CONDUIT	Designed by	G.K.	8-78
9-7-83	ADDED IF REQUIRED TO BARE COPPER GROUND	Checked by		
8-84	DELETED TRENCH DETAIL CHANGED PULL BOX	Quantities by		
9-85	ADDED NOTES FOR PULL BOX SPECIFICATIONS	Checked by		
		Supervised by	LESTER JONES	

Approved by _____
STATE DESIGN ENGINEER - RDWY

DRAWING NO. 1 OF 1
INDEX NO. 17503

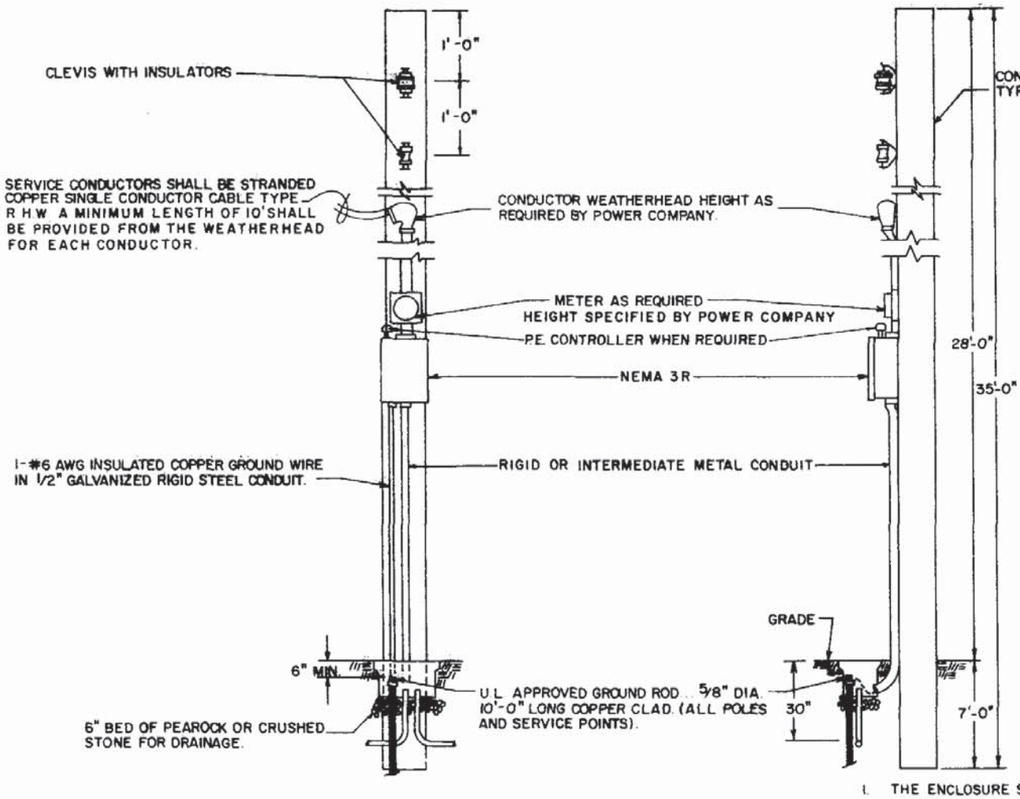

DETAIL "A"
AERIAL FEED

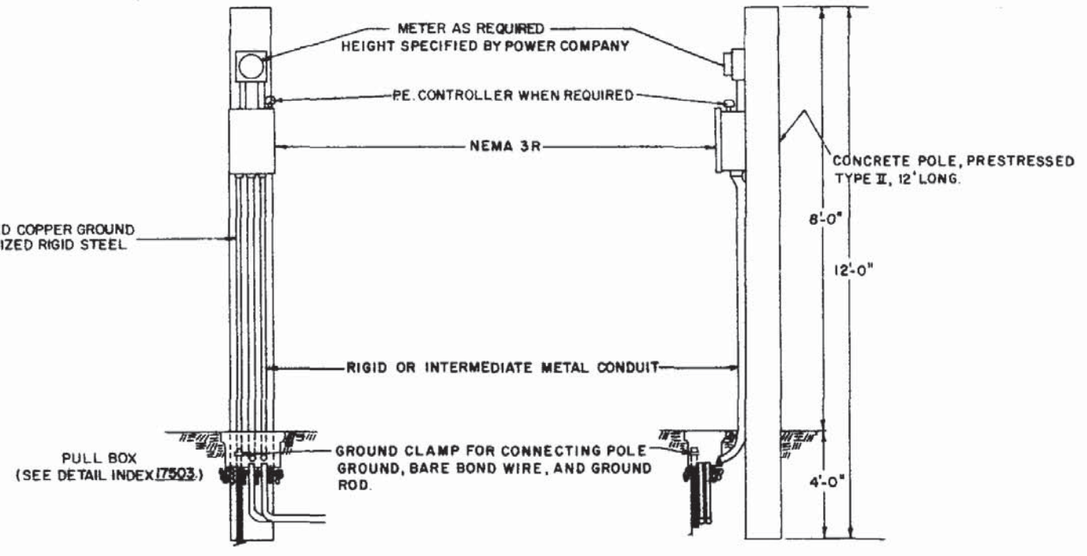

DETAIL "B"
UNDERGROUND FEED

1 PHOTO ELECTRIC CONTROL AS REQUIRED
2 ALL NEUTRAL WIRES TO HAVE WHITE INSULATION, DO NOT USE WHITE OR GREEN INSULATED WIRES FOR UNDERGROUNDED CONDUCTORS

SERVICE SPECIFICATIONS

1. THE ENCLOSURE SHALL BE NEMA 3R, POLE MOUNTED, RAIN-TIGHT, RATED 480 VAC.
2. THE ENCLOSURE DOOR SHALL BE LOCKABLE BY PADLOCK AND FOUR KEYS PROVIDED TO THE MAINTAINING AGENCY. THE DOOR SHALL HAVE A CONTINUOUS HINGE AND DRAW DOWN LATCHES.
3. 480 V BOLT-IN TYPE BREAKERS SHALL BE USED, ALL COMPONENTS TO BE INTERCHANGABLE WITH MAJOR MANUFACTRERS.
4. ALL BUS TO BE COPPER-225 A RATED. ENCLOSED COPPER GROUND BUS INCLUDED.
5. LOCATE CONTACTOR, TRANSFORMER, AND H.O.A. SWITCH INSIDE ENCLOSURE.
6. A 600 V LIGHTNING PROTECTOR SHALL BE WIRED INSIDE THE ENCLOSURE.
7. ENCLOSURE TO BE SIZED TO ACCOMMODATE AS MANY BREAKERS AS CALLED FOR AND OTHER SERVICE EQUIPMENT.
8. ENCLOSURE TO BE RIGIDLY ATTACHED TO THE POLE FACE.
9. ALL SERVICE EQUIPMENT SHALL BE U.L. APPROVED.
10. MAIN BREAKER REQUIRED IN ALL SERVICE PANELS WITH 2 OR MORE FEEDER BREAKERS.

FLORIDA DEPARTMENT OF TRANSPORTATION
TRAFFIC DESIGN
SERVICE POINT DETAILS

DATE	REVISIONS
8-84	EQUIPMENT NOTES ADDED.
9-85	ADDED SERVICE POLE DIMENSIONS

	INITIALS	DATES
Designed by	G.K	8-78
Checked by		
Quantities by		
Checked by		
Supervised by	LESTER JONES	

Approved by [signature]
STATE DESIGN ENGINEER-RDWY

DRAWING NO. 1 OF 1
INDEX NO. 17504

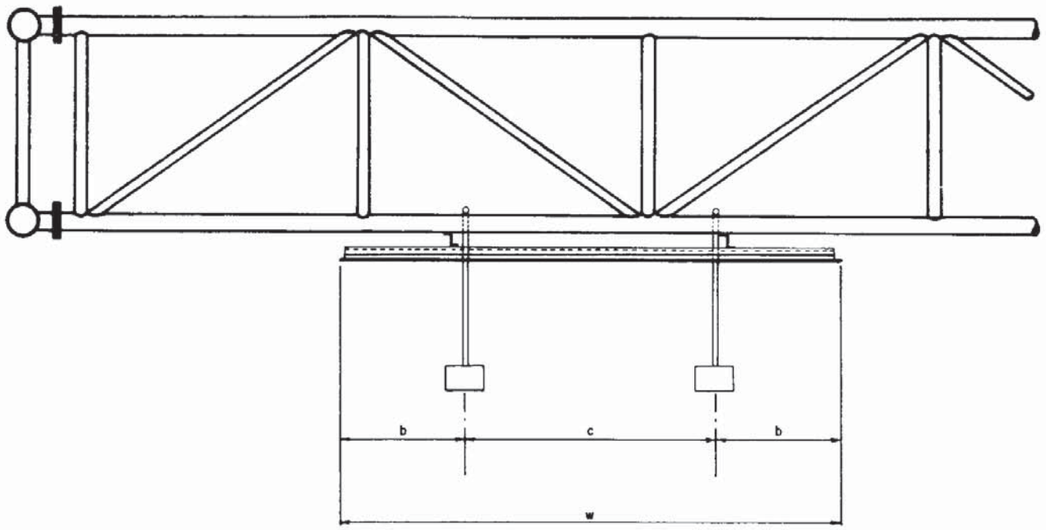

WIDTH OF SIGN FACE	10'-0" or LESS	10'-1" to 21'-0"	21'-1" to 32'-0"	32'-1" to 43'-0"
NUMBER OF FIXTURES	ONE	TWO	THREE	FOUR
EQUATIONS FOR PLACING FIXTURES ALONG SIGN WIDTH	W = 2b	W = 2b+c	W = 2b+2c	W = 2b+3c
	c = 0	c = 2.2b	c = 2.2b	c = 2.2b

SIGN LIGHTING INSTALLATION

The Roadway Lighting Contractor shall provide a means for sign service entry into a pole base or a pull-box installed in Lighting circuit, and loop 2' of Lighting circuit conductors for connection by Sign Contractor.

The sign contractor shall furnish and install luminaires, fused safety switches, conduit, conductors, and all other electrical equipment necessary for connection to Roadway Lighting circuit as provided by Roadway Lighting Contractor. Compression type connectors properly taped and waterproofed shall be used.

See Roadway Lighting Plans for sign service locations.

When Roadway Lighting Circuits are not available it is the responsibility of the Sign Contractor to furnish Service Point Equipment, (as specified in Index 17504) P.E Cell and any other equipment necessary for operation of Lighted Sign.

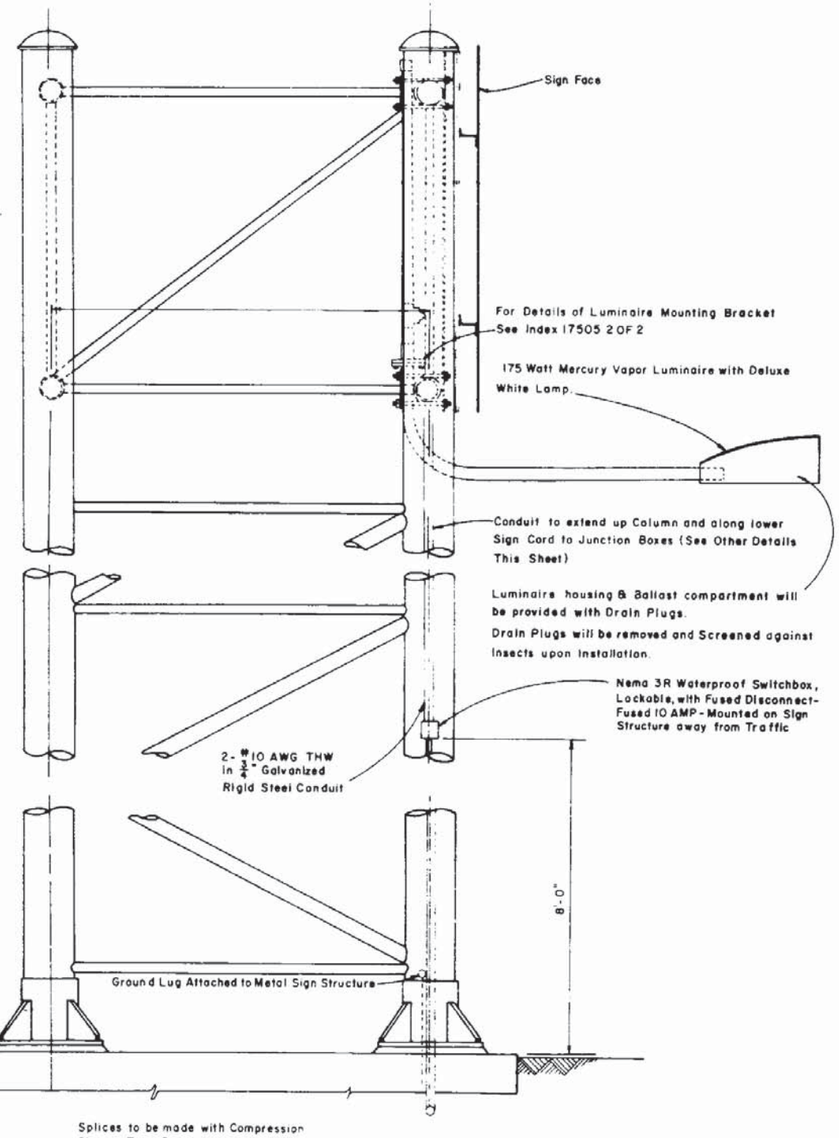

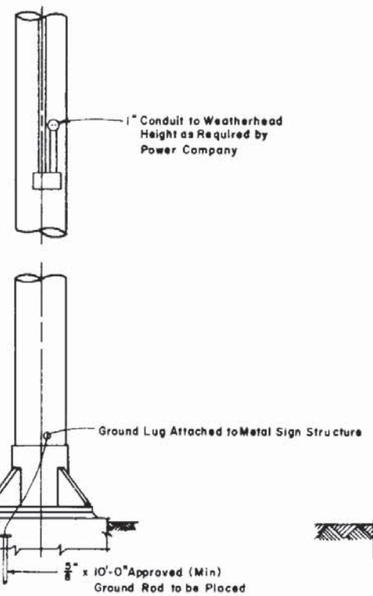

PLAN
OVERHEAD POWER SUPPLY

PLACEMENT OF SIGN LIGHTS

1- Luminaire shall be mounted so that the Lamp Center is 4'-0" in Front of the Sign Face.

2- Luminaire shall be mounted so that the back of the Fixture is Placed 1'-0" below the Bottom Edge of the Sign Face.

3- Luminaires from manufacturers who recommended that their Fixture be Tilted shall be Mounted on a Bracket which Provides this Recommended Tilt.

4- Photometric Data For The Mercury Vapor Luminaire Proposed for Sign Lighting shall be Submitted for Approval to the Lighting Engineer Florida Department of Transportation.

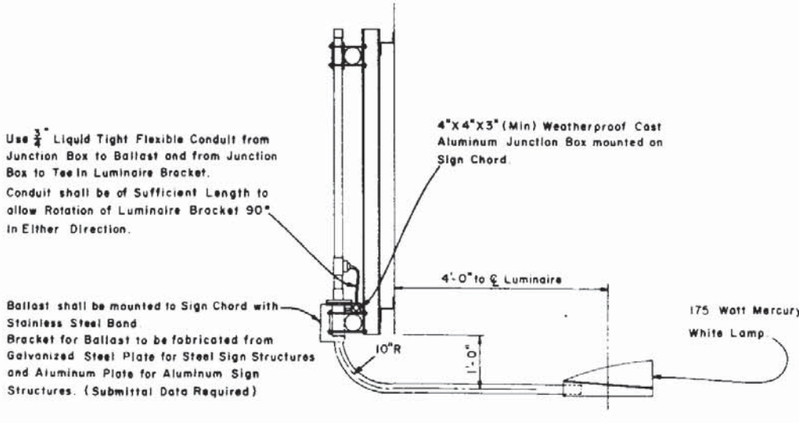

FLORIDA DEPARTMENT OF TRANSPORTATION
TRAFFIC DESIGN
EXTERNAL LIGHTING FOR SIGNS
(MERCURY VAPOR)

DATE	REVISIONS
10-6-78	Changed Index 17341-A TO Index 17505
8-84	Revised Luminaire Wattage and Installation Note

	INITIALS	DATES
Designed by		
Checked by		
Quantities by		
Checked by		
Supervised by	LESTER JONES	

Approved by _____
STATE DESIGN ENGINEER - RDWY

DRAWING NO 1 OF 2

INDEX NO 17505

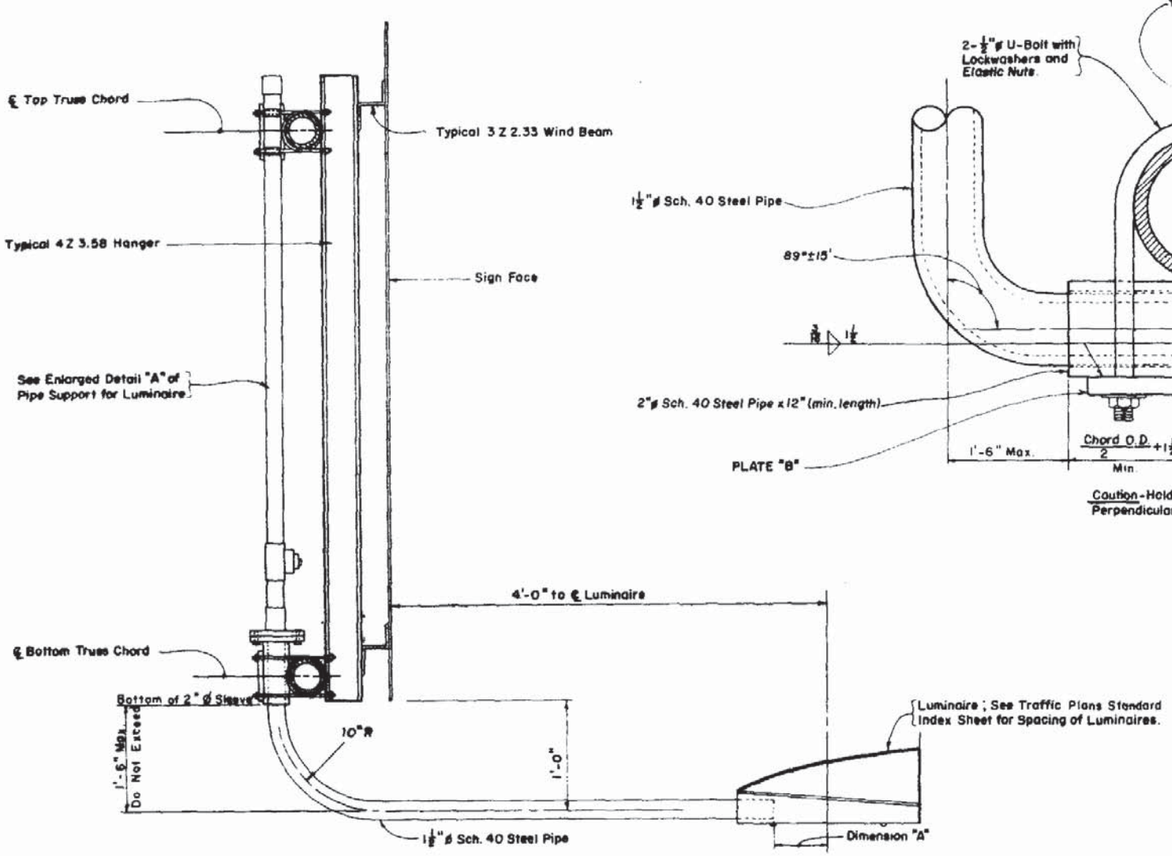

SECTION THROUGH SIGN SUPPORT AT LUMINAIRE

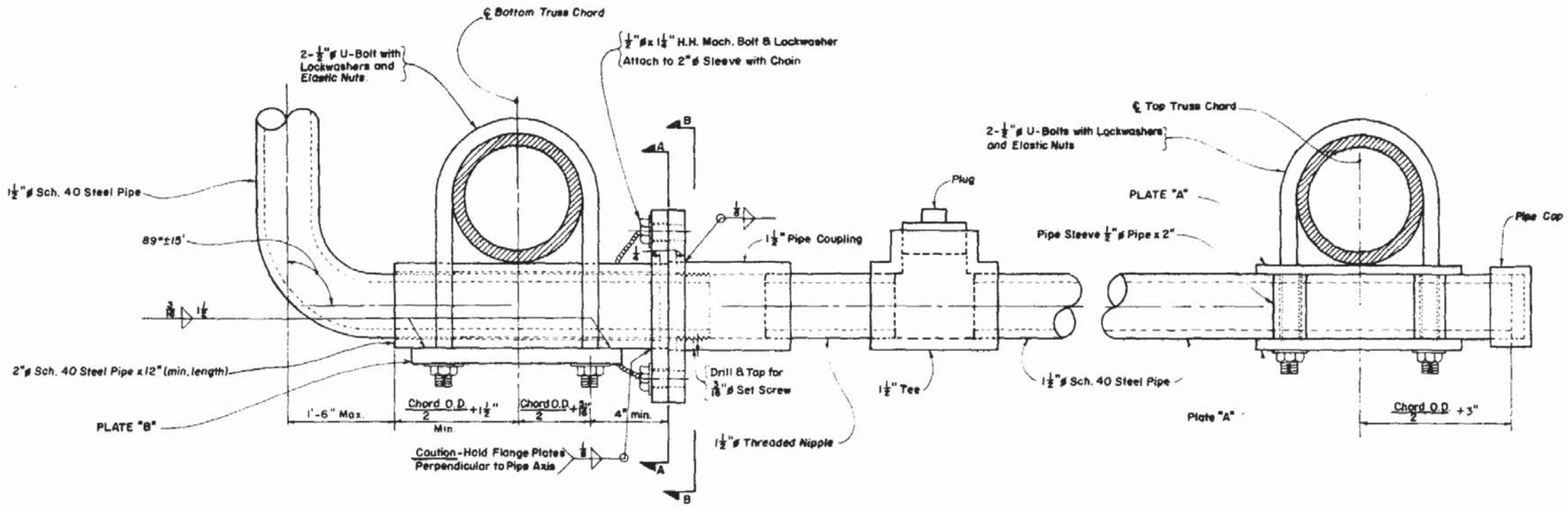

DETAIL "A"

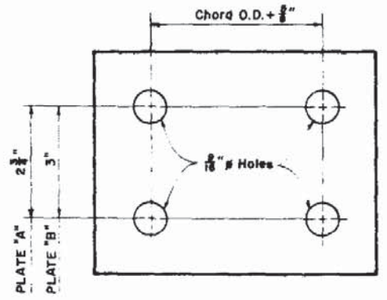

PLATE "A" Chord O.D.+2½"x½"x4¾"
PLATE "B" Chord O.D.+2½"x⅜"x5"

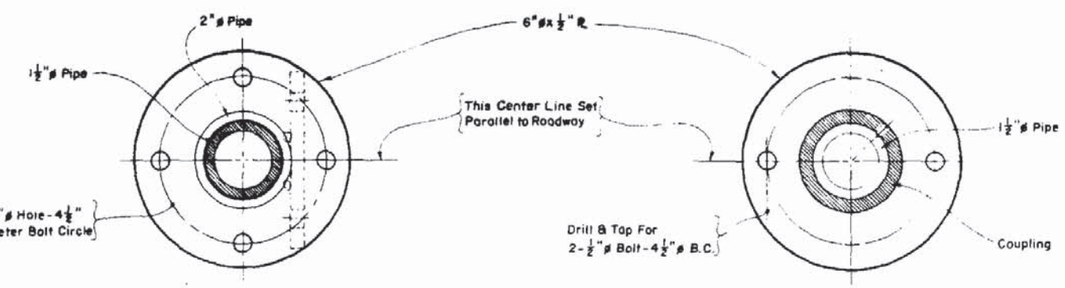

SECTION A-A

SECTION B-B

NOTES

1 - Dimension "A" To Be Established from Type and Make of Luminaire to be Purchased and Used on the Project.

2 - The Center Lines of Both Flange Plates and the 1½"ø Pipe Luminaire Support Arm are to be Set Parallel to the Roadway Before the Set Screw is Seated.

3 - Minor Adjustments in the Horizontal Location of the Luminaire Support Arm along the Bottom Chord of the Truss will be allowed so that the Flange Plates will Clear the Truss Web Members.

4 - All Steel Pipe shall meet the Strength Requirements or ASTM Specification A-53 Grade "A" or Grade "B". Steel Plates shall meet the Requirements of A-36 and Bolts, Nuts and Washers shall meet the Requirements of ASTM A307.

5 - All Items shall be Hot Dip Galvanized after Fabrication in Accordance with the Requirements of ASTM A123 and/or A153.

6 - Luminaire Support Arm shall be free to rotate in a clockwise or counter clockwise direction. When service or maintenance is required for Sign Face or Vertical Face of Truss; Support Arm shall be capable of being locked in a Position 90° from Parallel to the Roadway for Unobstructed Working Clearance.

FLORIDA DEPARTMENT OF TRANSPORTATION
TRAFFIC DESIGN
EXTERNAL LIGHTING FOR SIGNS (MERCURY VAPOR)

DATE	REVISIONS		INITIALS	DATES
10-6-78	Changed Index 12270 to Index 17505	Designed by	CK	
		Checked by	CWB	
		Quantities by		
		Checked by		
		Supervised by		

Approved by _____
STATE DESIGN ENGINEER - ROWY

DRAWING NO	INDEX NO.
2 OF 2	17505

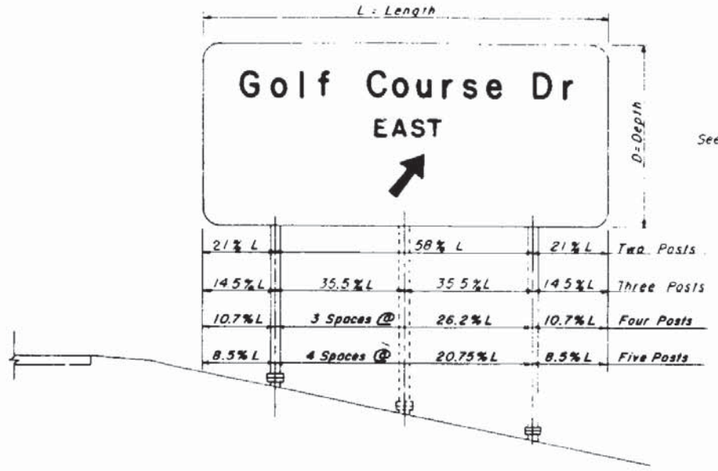

TYPICAL ELEVATION

(For Notes And Dimensions Not Shown, See "Typical Cross Section" Sheets)

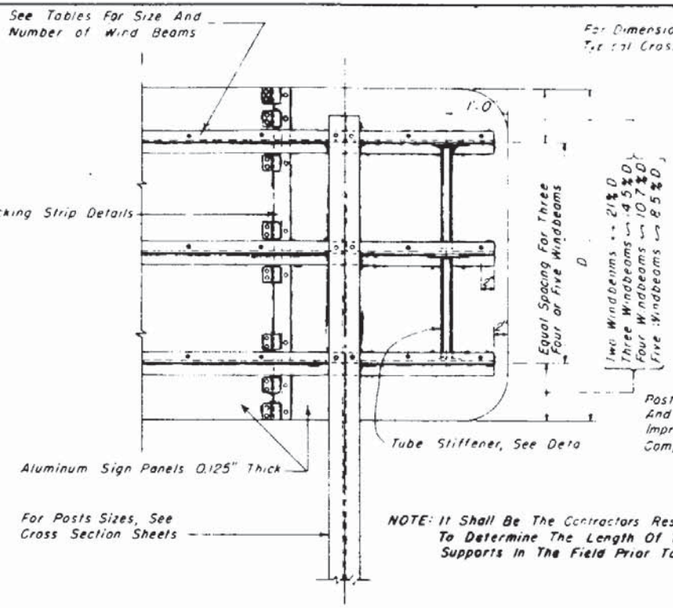

PARTIAL REAR ELEVATION

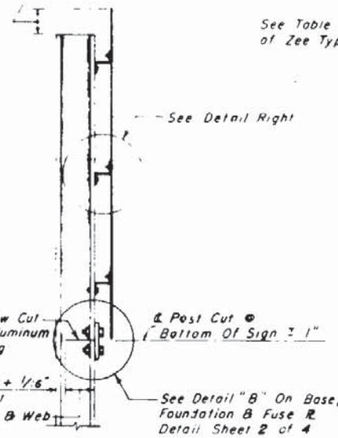

NOTE: It Shall Be The Contractors Responsibility To Determine The Length Of The Column Supports In The Field Prior To Fabrication.

SIDE VIEW

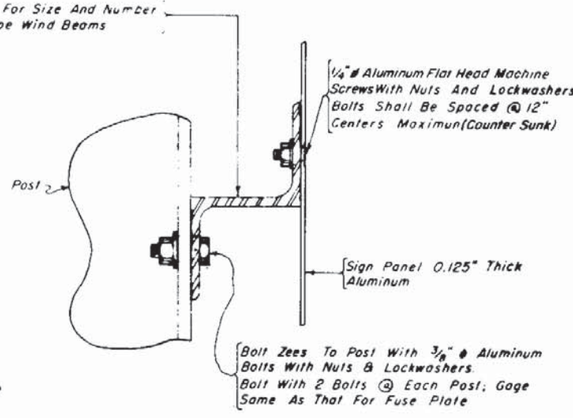

Z TYPE WINDBEAM

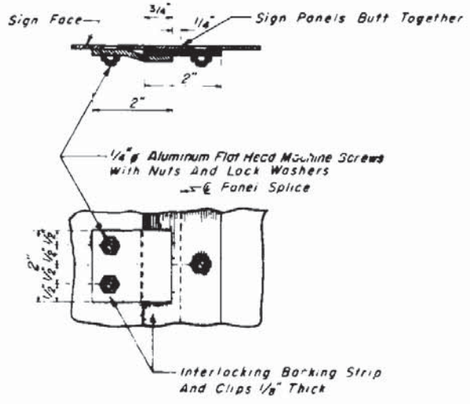

BACKING STRIP DETAIL

(Maximum Spacing Of Clips 12")

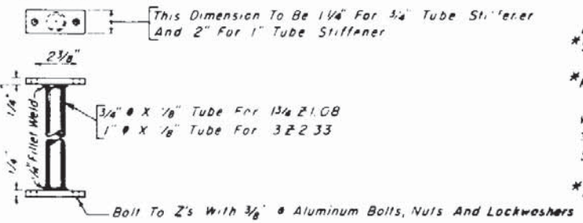

STIFFENER DETAIL

NUMBER OF WIND BEAMS FOR GIVEN DEPTH & WIND					
WIND	NO. BEAMS	MAX. DEPTH	WIND	NO. BEAMS	MAX. DEPTH
60	2	10'-3"	80	2	8'-3"
60	3	14'-9"	80	3	11'-9"
60	4	20'-0"	80	4	15'-9"
60	5	25'-3"	80	5	20'-0"
70	2	9'-0"	90	2	7'-3"
70	3	13'-0"	90	3	10'-6"
70	4	17'-6"	90	4	14'-3"
70	5	22'-3"	90	5	18'-0"

SIZE OF WIND BEAMS				
SIZE OF ZEE	LENGTH OF SIGN FOR 2 POSTS	LENGTH OF SIGN FOR 3 POSTS	LENGTH OF SIGN FOR 4 POSTS	LENGTH OF SIGN FOR 5 POSTS
1 3/4" Z 1.08	0' ⇆ 14'-0"	14'-1" ⇆ 20'-0"	20'-1" ⇆ 27'-0"	27'-1" ⇆ 35'-0"
3 Z 2.33	14'-1" ⇆ 27'-0"	20'-1" ⇆ 38'-0"	27'-1" ⇆ 51'-6"	35'-1" ⇆ 65'-0"
3 Z 3.38	OVER 27'-0"	OVER 38'-0"	OVER 51'-6"	OVER 65'-0"

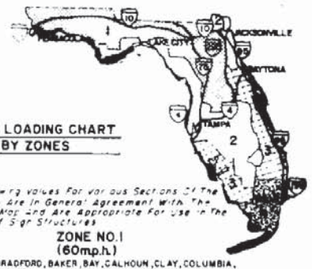

WIND LOADING CHART BY ZONES

The Following Values For Various Sections Of The Interstate Are In General Agreement With The Isotach Map And Are Appropriate For Use In The Design Of Sign Structures

ZONE NO.1 (60m.p.h.)

ALACHUA, BRADFORD, BAKER, BAY, CALHOUN, CLAY, COLUMBIA, ESCAMBIA, GADSDEN, GILCHRIST, HAMILTON, HOLMES, JACKSON, JEFFERSON, LAFAYETTE, LAKE, LEON, LIBERTY, MADISON, MARION, OKALOOSA, PUTNAM, SANTA ROSA, SUMTER, SUWANNEE, UNION, WALTON and WASHINGTON COUNTIES.

ZONE NO.2 (70 m.p.h.)

CITRUS, DESOTO, DIXIE, DUVAL, FLAGLER, FRANKLIN, GLADES, GULF, HARDEE, HENDRY, HERNANDO, HIGHLANDS, HILLSBOROUGH, LEVY, NASSAU, OKEECHOBEE, ORANGE, OSCEOLA, PASCO, PINELLAS, POLK, SEMINOLE, ST. JOHNS, TAYLOR and WAKULLA COUNTIES.

ZONE NO. 3 (80 m.p.h.)

BREVARD, CHARLOTTE, COLLIER, INDIAN RIVER, LEE, MANATEE, MARTIN, PALM BEACH, SARASOTA, ST. LUCIE and VOLUSIA COUNTIES

ZONE NO.4 (90m.p.h.)

BROWARD, DADE and MONROE COUNTIES

GENERAL NOTES

DESIGN SPECIFICATION: Standard Specifications for Structural Supports for Highway Signs, Luminaires and Traffic Signals. A.A.S.H.O. 1975.

*SHEETS AND PLATES: Material used Shall Meet The Requirements of Aluminum Association Alloy 6061-T6 And ASTM Specification B-209. Sheets Are To Be Degreased, Etched, Neutralized And Treated With Alodine 1200, Iridite 14-2, Bonderite 721, or Equal, No Stenciling Permitted on Sheets.

*MATERIALS: All Aluminum Materials Shall Meet The Requirements of The Aluminum Association Alloy 6061-T6 And Also The Following ASTM Specifications For The Following; Sheet And Plates B209; Extruded Tube, Bars, Rods & Shapes B221 And Standard Structural Shapes B308.

WELDING RODS: Aluminum Association Alloy No 5556 Filler Wire

TOLERANCE: All Above Materials Shall Be In Keeping With The ASTM Specifications Governing

STEEL BOLTS, NUTS & WASHERS: All Steel Bolts, Nuts And Washers Shall Meet The Requirements of ASTM A325 And Shall Have An Electroplated Zinc Coating Type I.S Applied in Accordance with ASTM A-164.

*ALTERNATE MATERIAL: Material used for Sheet and Plate shall also meet the requirements of Aluminum Assoc. Alloy 5154-H38 and A.S.T.M. Specifications B209. Material used for Extruded Bars, Rods, Shapes and Tubes shall also meet the requirements of Aluminum Assoc. Alloy 6351-T5 and A.S.T.M. Specification B221

BASE CONNECTION: High Strength Bolts in The Base Connection Shall Be Tightened Only To The Torque Shown In The Table. Overtightened Base Connections Will Not Be Accepted.

ALUMINUM BOLTS, NUTS & LOCKWASHERS: Aluminum Bolts Shall Meet The Requirements of Aluminum Association Alloy 2024-T4 Or 6061-T6 (ASTM Spec. B-211). The Bolts Shall Have An Anodic Coating of At Least 0.0002" Thick And Be Chromate Sealed. Lockwashers Shall Meet The Requirements of Aluminum Association Alloy 7075-T6 (A.S.T.M. Specification B-221). Nuts Shall Meet The Requirements of Aluminum Association Alloy 6262-T9 Or 6061-T6

SIGN FACE: All Sign Face Corners Shall Be Rounded. See Sign Layout Sheet.

MATERIAL STRESSES: All Allowable Stresses Are In Accordance With The Standard Specifications for Structural Supports for Highway Signs, Luminaires and Traffic Signals. A.A.S.H.O. 1975, For All Materials Shown in The Plans.

DESIGN WIND LOAD: See Wind Loading Chart By Zones For Wind In Miles Per Hour On Flat Sign Area. The Allowable Working Stress Shall Be Increased By 40% For Combination Dead Load And Wind Load.

SHOP DRAWINGS: When Ground Signs Supports are Fabricated in accordance with these Plans NO SHOP DRAWINGS are Required. In the Event the Column Length Exceeds 2 ft. Above the Length as shown in the Plans, SHOP DRAWINGS WILL BE REQUIRED for Those Signs Only for Approval. However, Shop Drawings for Sign Panels, Messages, Lettering and Quantities shall be Submitted to Traffic PLANS for Approval.

FABRICATOR NOTE IMPORTANT

All Stiffened Base Plate Flanges And Fuse Plates Shall Be Bolted To Posts Using High Strength Bolts. Bolts Shall Be Tightened In The Shop Following A Method Approved By The Engineer. Tightening Shall Be To Such A Degree So As To Obtain The Following Minimum Residual Tension In Each Bolt:

HIGH STRENGTH BOLTS (A-325)

BOLT SIZE	MIN. RES. BOLT TENSION
5/8"	19,200 Lbs
3/4"	28,400 Lbs
7/8"	36,050 Lbs
1"	47,250 Lbs.
1 1/8"	56,450 Lbs
1 1/4"	71,700 Lbs

ALUMINUM

REVISIONS			
Dates	Descriptions		
6-19-68	1/2 BOLT & WIND PRESSURE REDUCTION NOTE REMOVED & A.S.H.O. 1968		
3-69	CHANGED WIND LOADING SUMMARY		
10-69	ALT. MATERIAL ALLOY NOTE		

STATE ROAD DEPARTMENT OF FLORIDA
BRIDGE DIVISION

STANDARD ROADSIDE SIGN BREAK-AWAY PANEL DETAIL

ROAD NO.	COUNTY		PROJECT NO.

	Names	Dated
Detailed by	HHJ	1-67
Checked by	C.W.B.	1-67
Quantities by		
Checked by		
Traced by		

APPROVED BY

Assistant State Highway Engineer

Drawing No. 1 of 4

Index No. 9535

An Alternate Cast Base of Alloy 356 and T6 Temper may be submitted for Consideration in lieu of the Fabricated Base for approval by the Engineer.

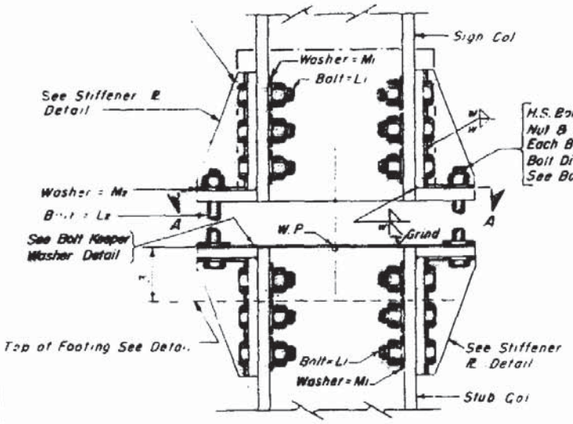

SIGN COL & STUB COL. ELEVATION
WF SHAPES

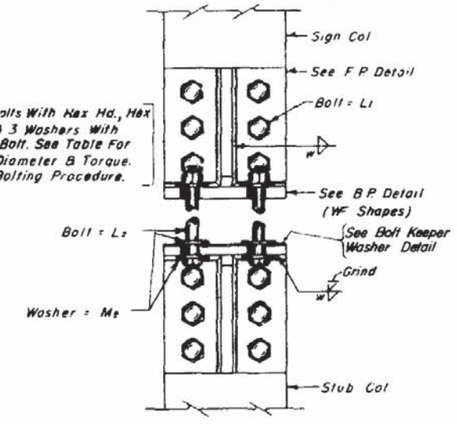

SIGN COL & STUB COL.
SIDE ELEVATION

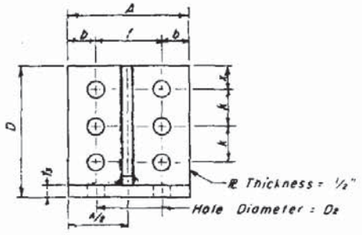

FLANGE PLATE DETAIL

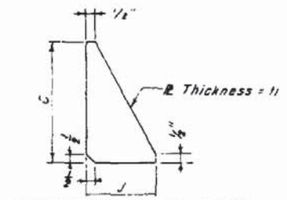

STIFFENER PLATE DETAIL

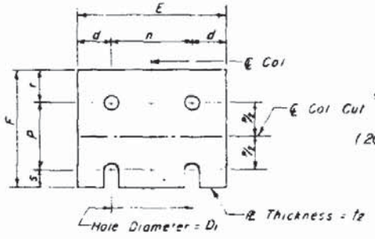

FUSE PLATE DETAIL

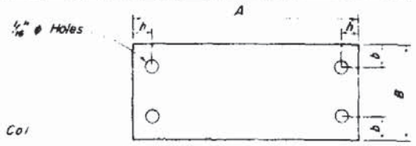

BOLT KEEPER WASHER DETAIL
I - BEAM SHAPES
(20 Gage or .040" thick Aluminum 6061-T6)

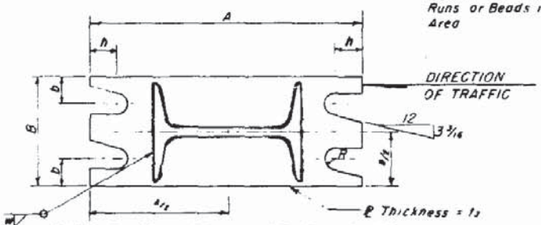

BASE PLATE DETAIL FOR I - BEAMS

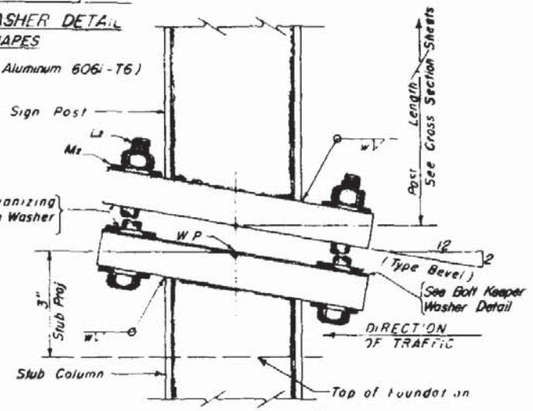

SIGN COL & STUB COL ELEVATION
I - BEAM SHAPES

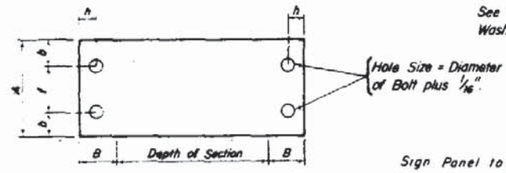

BOLT KEEPER WASHER DETAIL
WF SHAPES
(20 Gage or .040" thick Aluminum 6061-T6)

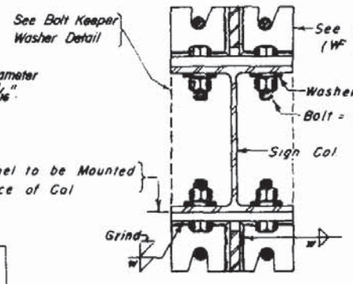

SECTION A-A

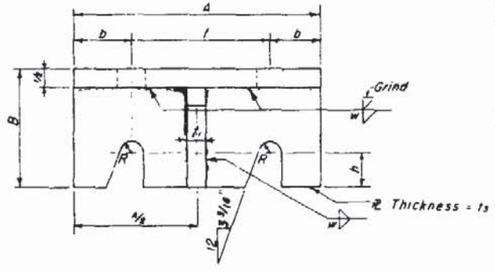

BASE PLATE DETAIL
FOR WF SHAPES

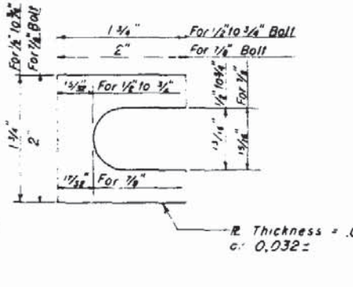

SHIM DETAIL
Furnish 2 ea .012" ± Thick And 2 ea .032" ± Thick Shims Per Post

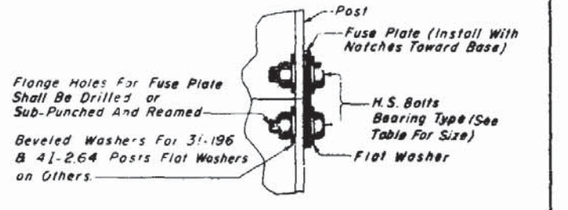

DETAIL "B" FUSE PLATE
(See Fabricator Note on "Two & Three Posts" Sheets)

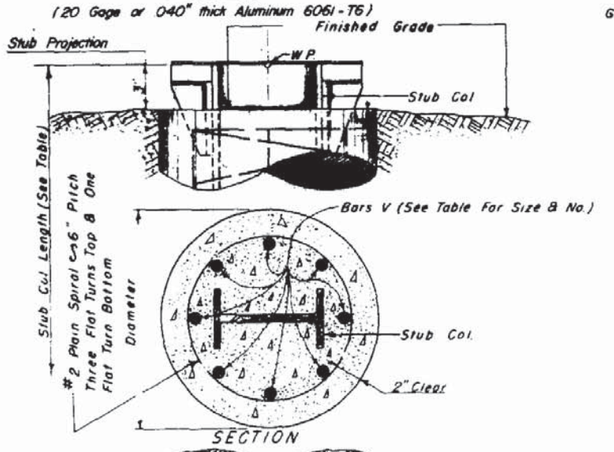

FOUNDATION DETAIL

NOTE To Prevent Galvanic Corrosion, Reinforcing Steel Shall Not Be In Contact With The Aluminum Stub Column.

BASE CONNECTION DATA TABLE

DIMENSION SECTION	A	B	C	D	l	L	BOLT SIZE & TORQUE (Lb)	M	M2	D2	R	x	b	f	h	k	t1	t3	w
31 196	7 1/2"	3"							1 1/2"		1/32"		3/4"		1/8"			1"	1/4"
41 264	7 1/2"	3"							1 1/2"		1/32"		3/4"		1/8"			1"	1/4"
6 WF 4.16	4"	3 1/4"	5"	5 3/8"	2 3/4"	3/8" ø	5/8" ø 640 lb	1 1/2"	1 1/2"	11/16"	3/32"	1"	3/4"	2 1/2"	1/8"	1 1/2"	1/2"	5/8"	3/8"
8 WF 5.90	5 1/4"	3 1/4"	5"	5 3/8"	2 3/4"	3/8" ø		1 1/2"	1 1/2"	11/16"	3/32"	1"	1 1/4"	2 3/4"	1/8"	1 1/2"	1/2"	5/8"	1/2"
8 WF 8.32	6 1/2"	3 1/4"	6 1/2"	7 1/2"	2 3/4"	3/8" ø		1 3/8"	1 1/8"	13/16"	1 1/32"	1 1/4"	1 1/2"	3 1/2"	1/8"	2	1/2"	3/8"	1/2"
10 WF 11.41	8"	3 1/4"	8"	8 5/8"	2 3/4"	7/8" ø	3/4" ø 940 lb	2"	1 3/4"	13/16"	1 3/32"	1 1/2"	2 1/4"	3 1/2"	1/8"	2 1/2"	1/2"	5/8"	5/16"
12 WF 13.84	8"	3 1/2"	8 1/2"	9 3/4"	3"	1" ø	7/8" ø 1290 lb	2 1/4"	2"	1 1/16"	1 3/32"	1 3/4"	1 3/4"	4 1/2"	1/8"	2 1/2"	5/8"	3/4"	5/8"
12 WF 18.34	10"	3 1/8"	10"	10 3/4"	3 1/8"	1" ø		2 1/4"	2"	1 1/16"	1 3/32"	1 3/4"	2 1/4"	5 1/2"	1"	3 1/4"	3/8"	3/4"	3/4"

FUSE PLATE DATA TABLE

BOLT SIZE	E	F	P	D	d	n	r	S	t2
3/8"	3"	3 1/8"	1 1/2"	1/8"	3/4"	1 1/2"	3/4"	7/8"	3/8"
3/8"	3"	3 1/8"	1 1/2"	1/8"	3/4"	1 1/2"	3/4"	7/8"	3/8"
3/8"	4"	3 3/8"	1 3/4"	1/8"	3/4"	2 1/2"	1"	7/8"	1/2"
3/4"	5 1/4"	4"	2"	3/16"	1 1/4"	2 3/4"	1 1/8"	7/8"	1/2"
7/8"	6 1/8"	4 1/2"	2 1/2"	3/16"	1 1/2"	3 1/2"	1 1/4"		5/8"
1"	7"	5 1/4"	2 3/4"	3/16"	1 3/4"	3 1/2"	1 1/2"	1/8"	3/16"
1 1/8"	8"	6"	3"	3/16"	1 3/4"	4 1/2"	1 3/4"	1 1/4"	3/4"
1 1/4"	9"	6 1/8"	3 1/4"	3/16"	1 3/4"	5 1/2"	1 1/8"	1 3/8"	3/4"

FOUNDATION DATA TABLE

DIA.	DEPTH	STUB LENGTH	REINFORCING BARS "V"
1'-6"	1'-6"	1'-6"	8 #4
1'-6"	1'-6"	1'-6"	8 #4
2'-0"	2'-3"	2'-0	8 #4
2'-0"	3'-3"	2'-6"	8 #5
2'-0"	4'-6"	2'-5"	8 #7
2'-0"	5'-3"	3'-0"	8 #10
2'-0"	8'-0	3'-6	9 #11
2'-0"	10'-9"	4'-0"	15 #11

NOTE
Sections Shown Are For Installation On Right Shoulder And In Gore Plate Slot Bevels Are Opposite Hand From That Shown For Installations In The Median.

PROCEDURE FOR ASSEMBLY OF BASE CONNECTION: FOR BOLTS L2

1 Assemble post to stub with bolts and with one flat washer on each bolt between plates
2. Shim as required to plumb post (See Shim Detail)
3 Tighten all bolts the maximum possible with 12 to 15" wrench to bed washers and shims and to clean bolt threads then loosen each bolt in turn and retighten in a Systematic order to the prescribed torque (See Table)
4 Burr threads at junction with nut using a center punch to prevent nut loosening.

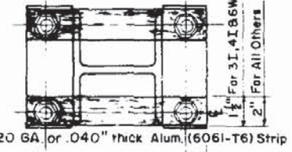

ALTERNATE BOLT KEEPER WASHER DETAIL FOR I-BEAM AND WF SHAPES

ALUMINUM BASE, FOUNDATION & FUSE DETAILS

STATE ROAD DEPARTMENT OF FLORIDA
BRIDGE DIVISION

STANDARD ROADSIDE SIGN
BREAK-AWAY POST DETAILS

REVISIONS		ROAD NO.	COUNTY	PROJECT NO.
Dates	Descriptions			
6-19-68	Bolt Size, Torque & Dim.			
5-22-69	Bolt Keeper Washer Detail Added			
8-7-72	TORQUE			
6-75	Class I Concrete Added			
1-76	Alternate Cast Base Added			
8-76	Alternate Bolt Keeper Washer Added			
5-76	Design Spec. Date Revised 1975			
9-80	GENERAL REVISION			

	Names	Dates
Detailed by	H.H.J.	1-67
Checked by	C.W.B.	1-67
Quantities by		
Checked by		
Traced by		

APPROVED BY

Assistant State Highway Engineer

Drawing No. 2 of 4

Index No. 9535

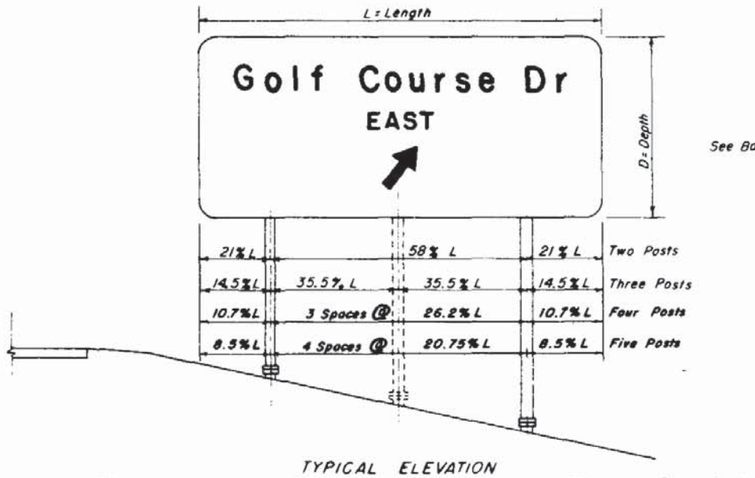

TYPICAL ELEVATION
(FOR NOTES AND DIMENSIONS NOT SHOWN, SEE "TYPICAL CROSS SECTION" SHEETS)

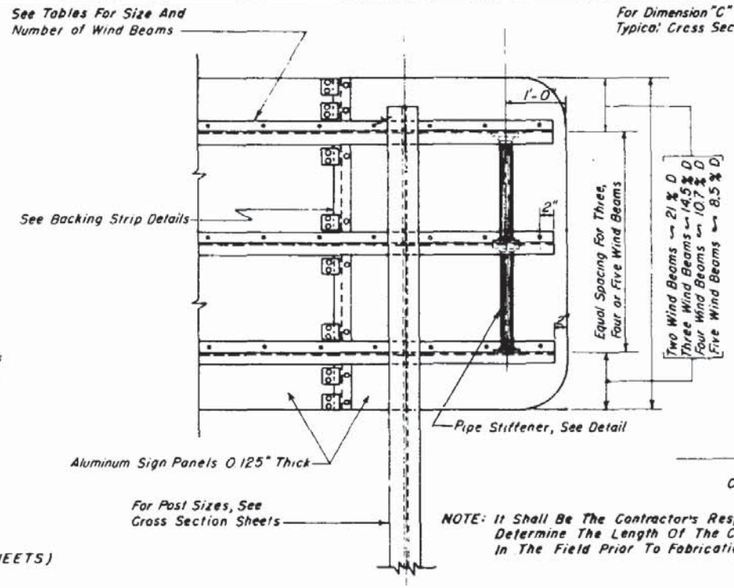

NOTE: It Shall Be The Contractor's Responsibility To Determine The Length Of The Column Supports In The Field Prior To Fabrication.

PARTIAL REAR ELEVATION

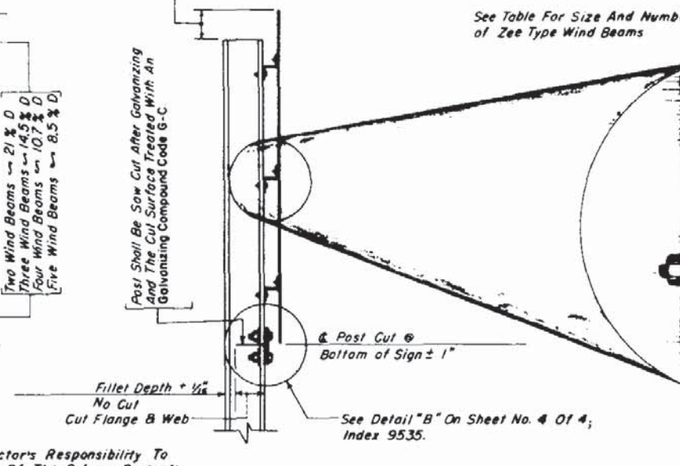

SIDE VIEW

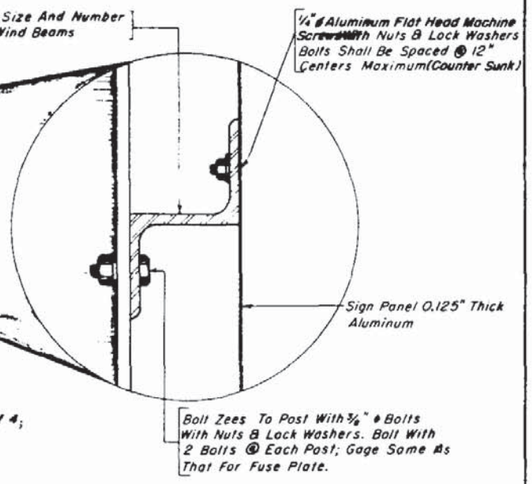

Z TYPE WIND BEAM

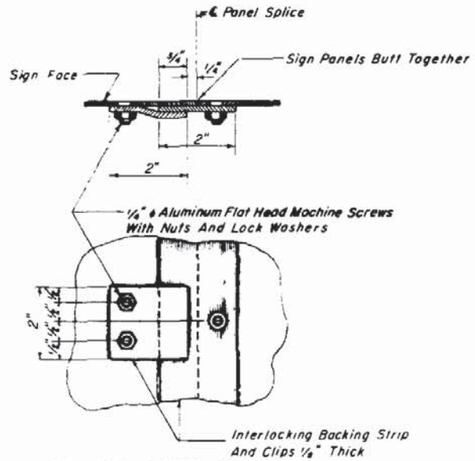

BACKING STRIP DETAIL
(Maximum Spacing Of Clips 12")

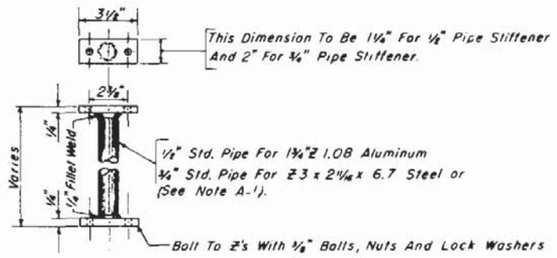

STIFFENER DETAIL

NUMBER OF WIND BEAMS FOR GIVEN DEPTH & WIND					
WIND	NO. BEAMS	MAX DEPTH	WIND	NO. BEAMS	MAX DEPTH
60	2	10'-3"	80	2	8'-3"
60	3	14'-9"	80	3	11'-9"
60	4	20'-0"	80	4	15'-9"
60	5	25'-3"	80	5	20'-0"
70	2	9'-0"	90	2	7'-3"
70	3	13'-0"	90	3	10'-6"
70	4	17'-6"	90	4	14'-3"
70	5	22'-3"	90	5	18'-0"

SIZE OF WIND BEAMS				
SIZE OF ZEE	LENGTH OF SIGN FOR 2 POSTS	LENGTH OF SIGN FOR 3 POSTS	LENGTH OF SIGN FOR 4 POSTS	LENGTH OF SIGN FOR 5 POSTS
*1½"Z 1.08	0' ⇝ 14'-0"	14'-1" ⇝ 20'-0"	20'-1" ⇝ 27'-0"	27'-1" ⇝ 35'-0"
Z 3 x 2⅛ x 6.7	14'-1" ⇝ 27'-0"	20'-1" ⇝ 38'-0"	27'-1" ⇝ 51'-6"	35'-1" ⇝ 65'-0"
Z 3 x 2½ x 9.8	OVER 27'-0"	OVER 38'-0"	OVER 51'-6"	OVER 65'-0"

* NOTE: Aluminum Zee ⇝ No Steel Equivalent Available.

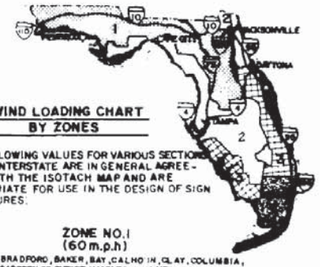

WIND LOADING CHART
BY ZONES

THE FOLLOWING VALUES FOR VARIOUS SECTIONS OF THE INTERSTATE ARE IN GENERAL AGREEMENT WITH THE ISOTACH MAP AND ARE APPROPRIATE FOR USE IN THE DESIGN OF SIGN STRUCTURES.

ZONE NO.1
(60 m.p.h.)
ALACHUA, BRADFORD, BAKER, BAY, CALHOUN, CLAY, COLUMBIA, ESCAMBIA, GADSDEN, GILCHRIST, HAMILTON, HOLMES, JACKSON, JEFFERSON, LAFAYETTE, LAKE, LEON, LIBERTY, MADISON, MARION, OKALOOSA, PUTNAM, SANTA ROSA, SUMTER, SUWANNEE, UNION, WALTON and WASHINGTON COUNTIES

ZONE NO.2
(70 m.p.h.)
CITRUS, DESOTO, DIXIE, DUVAL, FLAGLER, FRANKLIN, GLADES, GULF, HARDEE, HENDRY, HERNANDO, HIGHLANDS, HILLSBOROUGH, LEVY, NASSAU, OKEECHOBEE, ORANGE, OSCEOLA, PASCO, PINELLAS, POLK, SEMINOLE, ST. JOHNS, TAYLOR and WAKULLA COUNTIES

ZONE NO.3
(80 m.p.h.)
BREVARD, CHARLOTTE, COLLIER, INDIAN RIVER, LEE, MANATEE, MARTIN, PALM BEACH, SARASOTA, ST. LUCIE and VOLUSIA COUNTIES.

ZONE NO.4
(90 m.p.h.)
BROWARD, DADE and MONROE COUNTIES

GENERAL NOTES

DESIGN SPECIFICATION: Standard Specifications for Structural Supports for Highway Signs, Luminaires and Traffic Signals. A.A.S.H.O. 1975. — WELDING — Latest Edition of A.W.S. Structural Welding Code, Latest A.A.S.H.T.O. Standard Specifications for Welding of Structural Steel Highway Bridges and FLA. D.O.T. Standard Specifications with Supplement.

DESIGN LOADS: See Wind Loading Chart By Zones For Wind In Miles Per Hour On Flat Sign Area. The Allowable Working Stress Shall Be Increased By 40% For Combination Dead Load And Wind Load.

STRUCTURAL STEEL All Structural Steel Shall Meet The Requirements of A.S.T.M. A-36

STEEL BOLTS, NUTS AND LOCK WASHERS. Steel Bolts, Nuts And Lock Washers Shall Meet The Following A.S.T.M. Requirements; High Strength Bolts, Nuts And Washers A.S.T.M. A-325; All Other Steel Bolts, Nuts And Washers, A.S.T.M. A-307.

GALVANIZING OR METALIZING: All Steel Shapes, Angles, Tees, Plates, ASTM A307 Bolts, Nuts and Washers Shall Be Hot Dip Galvanized or Metalized After Fabrication, Hot Dip Galvanizing Shall Be in Accordance With The Requirements Of A.S.T.M. A-123 and/or A-153.

SIGN PANELS The Material Used Shall Meet The Requirements of The Aluminum Association Alloy, 6061-T6 And A.S.T.M. Specification B209. The Sheets Are To Degreased, Etched, Neutralized And Treated With Alodine 1200, Iridite 14-2, Bonderite 721, Or Equal. No Stenciling Permitted On Sheets

ALUMINUM BOLTS, NUTS AND LOCK WASHERS. Aluminum Bolts Shall Meet The Requirements of The Aluminum Association Alloy 2024-T4 or 6061-T6 (A.S.T.M. Specification B-211). The Bolts Shall Have An Anodic Coating of At Least 0.0002" Thick And Be Chromate Sealed Lock Washers Shall Meet The Requirements of Aluminum Association Alloy T075-T6 (A.S.T.M. Specification B-221). Nuts Shall Meet The Requirements of Aluminum Association Alloy 6262-T9 or 6061-T6

TOLERANCE All Above Materials Shall Be in Keeping With The A.S.T.M. Specifications Governing.

MATERIAL STRESSES. All Allowable Stresses Are In Accordance With The Standard Specifications for Structural Supports for Highway Signs, Luminaires and Traffic Signals. A.A.S.H.O. 1975, For All Materials Shown in The Plans.

SHOP DRAWINGS: See Shop Drawing Note Sheet 1 of 4, 9535.

BASE CONNECTION. High Strength Bolts In The Base Connection Shall Be Tightened Only To The Torque Shown In The Table Overtightened Base Connections Will Not Be Accepted

FRICTION FUSE PLATE Notched Steel Fuse Plates Shall Conform To The Requirements of A.S.T.M. Specificotton A-36. All Holes Shall Be Drilled. All Plate Cuts Shall, Preferably, Be Saw Cuts; However, Flame Cutting Will Be Permitted Provided All Edges Are Ground. Metal Projecting Beyond The Plane of The Plate Face Will Not Be Tolerated.

SIGN FACE All Sign Face Corners Shall Be Rounded. See Sign Layout Sheet.

ALUMINUM MATERIALS. All Aluminum Materials Other Than Bolts, Nuts And Lock Washers Shall Meet The Requirements of The Aluminum Association Alloy 6061-T6 And Also The Following A.S.T.M. Specifications For The Following; Sheet And Plates B209; Extruted Tube, Bars, Rod And Shapes B221 And Standard Structural Shapes B308.

HIGH STRENGTH BOLTS (ASTM A325) Shall Have An Electroplated Zinc Coating Type LS Applied in Accordance with ASTM A-164.

FABRICATOR NOTE: IMPORTANT
All Friction Fuse Bolts Shall Be Tightened In The Shop Following A Method Approved By The Engineer. Tightening Shall Be To Such Degree As To Obtain The Following Minimum Residual Tension In Each Bolt, (See Table Below).

NOTE A-1
At The Contractors Option, Aluminum Zees And Stiffener May Be Used In Lieu of Structural Steel Zees And Stiffeners See Drawing No. 1 of 4, Index No. 9535 For Aluminum Zee And Stiffener

HIGH STRENGTH BOLTS (A-325)
MINIMUM RESIDUAL TENSION

BOLT SIZE	TENSION
⅝"	19,200 Lbs.
¾"	28,400 Lbs.
1"	47,250 Lbs.
1⅛"	56,450 Lbs.
1¼"	71,700 Lbs.
1⅜"	85,450 Lbs.

REVISIONS					
9-80	GENERAL REVISION	12-71	REV. LENGTH OF WIND BEAMS		
7-82	4 Post & 5 Post Wind Beam Zees Added	9-72	Rev. C.C. Spacing Note		
		7-73	REV. METALIZING NOTE	6-19-68	½" BOLT & WIND PRESSURE REDUCTION NOTE REMOVED A.S.H.O. 1968
		8-73	Rev. Shop Dwg. Note		
		3-74	Rev. Round HD. Bolts to Flat HD. Mach. Screws		
		1-76	Rev. Wind Loading	5-69	CHANGE WIND LOADING SUMMARY
		5-76	Design Spec. Date Rev. to 1975		
		11-77	Rev. Detail "B" Note		
		1-78	Design Spec. Date Rev.	8-70	REV. SIZE OF WIND BMS
		11-78	Rev. Design Loads Note		

STEEL

STATE ROAD DEPARTMENT OF FLORIDA
BRIDGE DIVISION

STANDARD ROADSIDE SIGN
BREAK-AWAY PANEL DETAIL

ROAD NO.	COUNTY		PROJECT NO.
	Names	Dates	APPROVED BY
Detailed by	H H J.	1-67	
Checked by	C.W.B.	1-67	
Quantities by			Assistant State Highway Engineer
Checked by			
Traced by			Drawing No. 3 of 4 — Index No. 9535

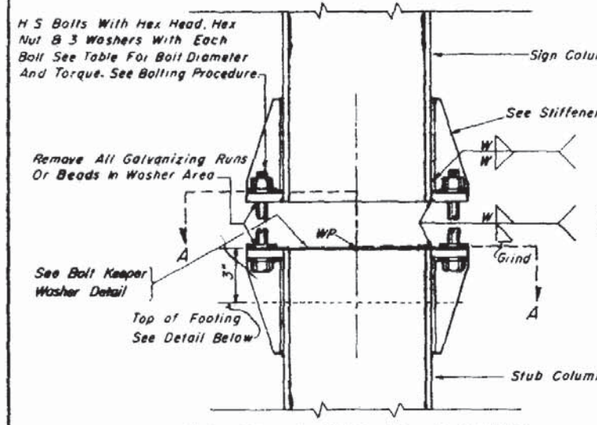

SIGN COL & STUB COL ELEVATION
WF SHAPES

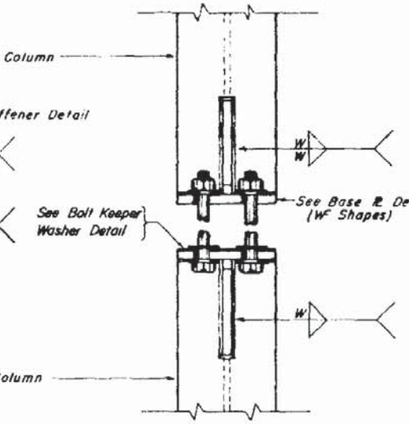

SIGN COL. & STUB COL. ELEVATION
WF SHAPES

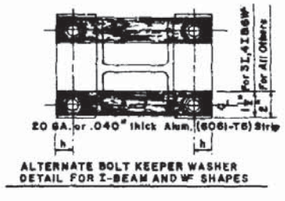

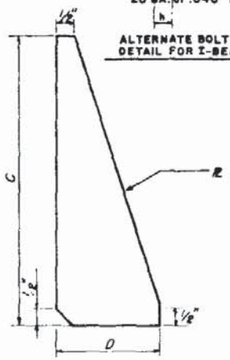

STIFFENER PLATE DETAIL

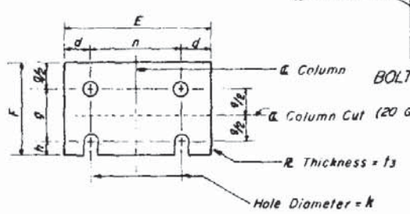

FUSE PLATE DETAIL

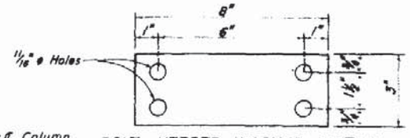

BOLT KEEPER WASHER~DETAIL
I - BEAM SHAPES
(20 Gage or .040" thick Aluminum 6061-T6)

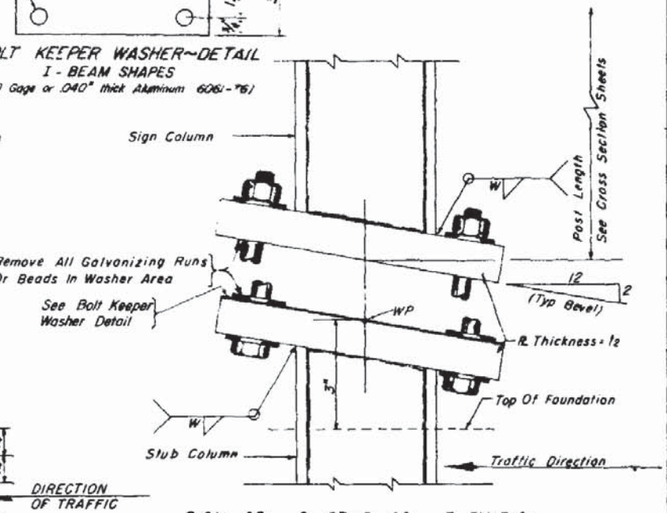

SIGN COL. & STUB COL. ELEVATION
I-BEAM SHAPES

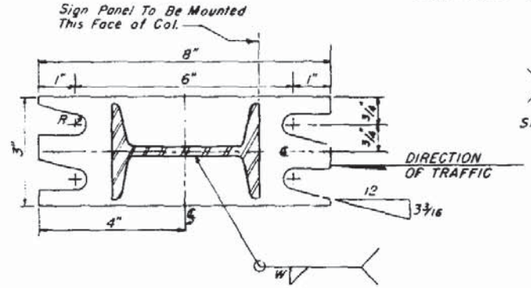

BASE PLATE I-BEAMS

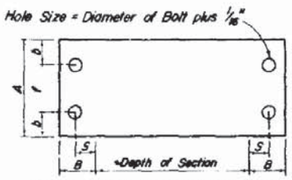

BOLT KEEPER WASHER DETAIL
(20 Gage or .040" thick Aluminum 6061-T6)

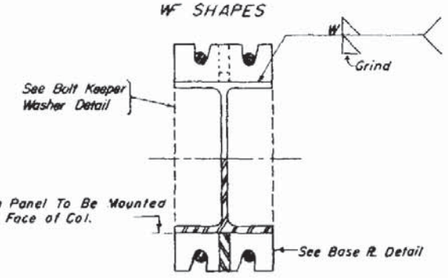

SECTION A-A

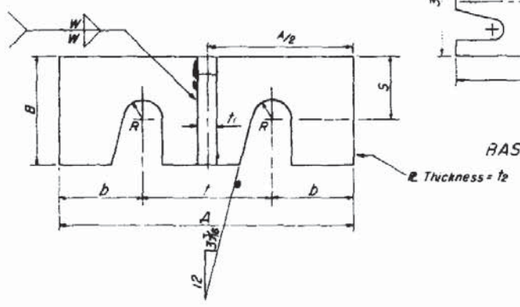

BASE PLATE DETAIL
WF SHAPES

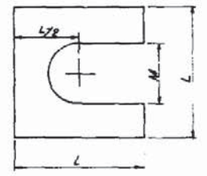

SHIM DETAIL
Furnish 2 ~ .012" ± Thick &
2 ~ .032" ± Thick Shims Per Post

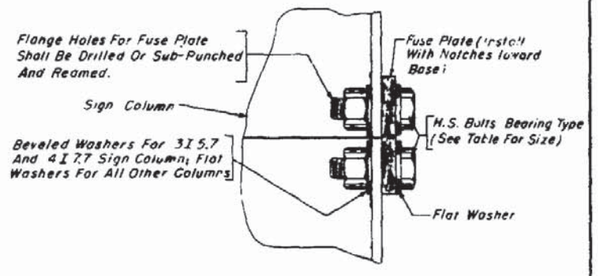

DETAIL "B" FUSE PLATE
(See Fabrication Note On Sheet Drawing No. 3 of 4 Index No. 9535)

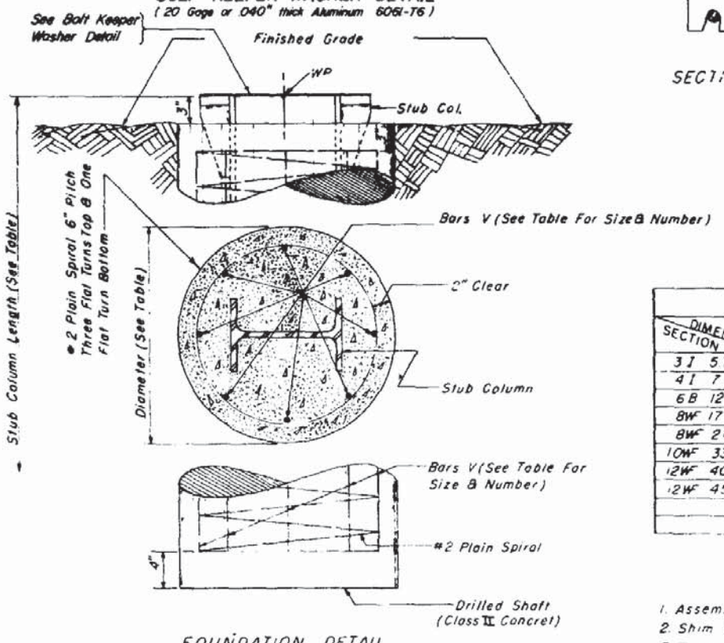

FOUNDATION DETAIL

NOTE:
Sections Shown Are For Installation On Right Shoulder And In Gore
Plate Slot Bevels Are Opposite Hand From That Shown For Installations In The Median.

BASE CONNECTION DATA													FUSE PLATE DATA									FOUNDATION DATA				SHIM	
DIMENSION / SECTION	A	B	C	D	Bolt Size & Torque	R	b	f	s	t	t2	W	E	n	d	F	g	h	k	t3	Bolt Size	Dia	Depth	Stub Length	Reinf. Bars V	L	M
31 57					5/8" ~ 640" #	1 1/16"					1"	1/4"	3"	1 1/2"	3/16"	4 1/16"	2 1/4"	3/4"	1 1/16"	1/2"	3/8"	1'-6"	1'-6"	1'-6"	8 ~ #4	1 3/8"	1 1/16"
41 77					3/8" ~ 640" #	7/16"					1"	1/4"	3 1/16"	1 3/8"	3/16"	4 1/16"	2 1/4"	3/4"	1 1/16"	1/2"	3/8"	1'-6"	2'-0"	2'-0"	8 ~ #4	1 3/8"	1 1/16"
6B 12	4"	2"	4"	2"	3/8" ~ 640" #	7/16"	1/4"	2 1/2"	1 1/8"	1/2	1 1/2"	1/4"	4"	2 1/8"	1/8"	4 1/16"	2 1/4"	3/4"	1 1/16"	1/2"	3/8"	2'-0"	2'-9"	2'-3"	8 ~ #5	1 3/8"	1 1/16"
8WF 17	5 1/4"	2"	5 1/8"	2"	5/8" ~ 640" #	11/32"	1 1/4"	2 3/8"	1 1/4"	1/2"	1/2"	1/4"	5 1/4"	2 3/8"	1 1/4"	4 3/16"	2 1/2"	7/8"	1 1/16"	1/2"	3/4"	2'-0"	4'-0"	2'-9"	9 ~ #7	1 1/2"	1 1/16"
8WF 24	6 1/2"	2 1/4"	6 1/2"	2 1/4"	3/4" ~ 940" #	13/32"	1 1/2"	3 1/16"	1 3/8"	1/2"	5/8"	5/16"	6 1/16"	3 1/16"	1 1/2"	6 3/16"	3 1/2"	1 1/16"	1 1/16"	3/4"	1"	2'-0"	5'-6"	3'-3"	9 ~ #9	1 3/4"	1 7/16"
10WF 33	8"	2 1/2"	8"	2 1/2"	7/8" ~ 1290" #	15/32"	1 1/4"	5 1/16"	1 1/2"	1/2"	3/4	5/16"	8"	4 1/2"	1 1/4"	7 1/4"	4"	1 1/4"	1 13/16"	3/4"	1 1/8"	2'-0"	7'-9"	3'-9"	9 ~ #11	2"	1 3/16"
12WF 40	8"	2 3/4"	8"	2 3/4"	1" ~ 1580" #	17/32"	1 1/4"	5 1/16"	1 5/8"	1/2"	3/4"	1/16"	8"	4"	2"	8 1/16"	4 1/2"	1 7/8"	1 13/16"	3/4"	1 1/4"	2'-0"	10'-0"	4'-6"	14 ~ #11	2 1/4"	1 1/16"
12WF 45	8"	3"	8"	3"	1" ~ 1580" #	17/32"	1 1/4"	5 1/16"	1 5/8"	1/2"	3/4"	1/16"	8"	4"	2"	8 1/16"	4 1/2"	1 7/8"	1 13/16"	3/4"	1 1/4"	2'-0"	10'-0"	4'-6"	14 ~ #11	2 1/2"	1 1/16"

PROCEDURE FOR ASSEMBLY OF BASE CONNECTION

1. Assemble Post To Stub With Bolts And With One Flat Washer On Each Bolt Between Plates.
2. Shim As Required To Plumb Post (See Shim Detail)
3. Tighten All Bolts The Maximum Possible With 12" To 15" Wrench To Bed Washers And Shims And To Clean Bolt Threads Then Loosen Each Bolt In Turn And Retighten In A Systematic Order To The Prescribed Torque (See Table)
4. Burr Threads At Junction With Nut Using A Center Punch To Prevent Nut Loosening

REVISIONS	
Dates	Descriptions
6-7-72	TORQUE
6-73	Class II Concrete Added
5-76	Design Spec. Date Rev. to 1975
9-80	GENERAL REVISION

	REVISIONS	
	Dates	Descriptions
1	4-1-68	TORQUE
2	4-1-68	SECTION & DIM
3	6-19-68	BOLT SIZE, TORQUE AND DIM.
4	5-22-69	BOLT KEEPER WASHER ADDED

STEEL ~ BASE, FOUNDATION & FUSE PL DETAILS

STATE ROAD DEPARTMENT OF FLORIDA
BRIDGE DIVISION

STANDARD ROADSIDE SIGN
BREAK-AWAY POST DETAILS

ROAD NO.	COUNTY	PROJECT NO.

	Name	Date
Detailed by	H.H.J.	1-67
Checked by	C.W.B	1-67
Quantities by		
Checked by		
Traced by		

APPROVED BY
Assistant State Highway Engineer

Drawing No. 4 of 4
Index No. 9535

FED. ROAD DIV. NO.	STATE	PROJECT NO.	FISCAL YEAR	SHEET NO.
3	FLA.			

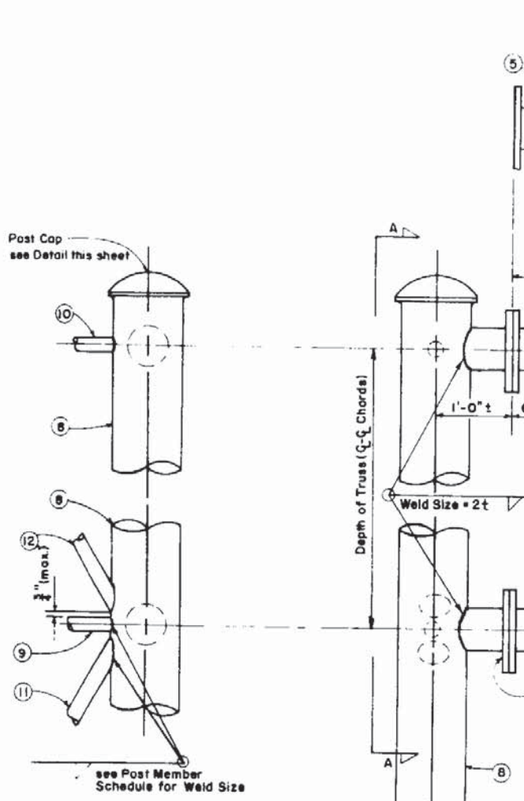

VIEW A-A

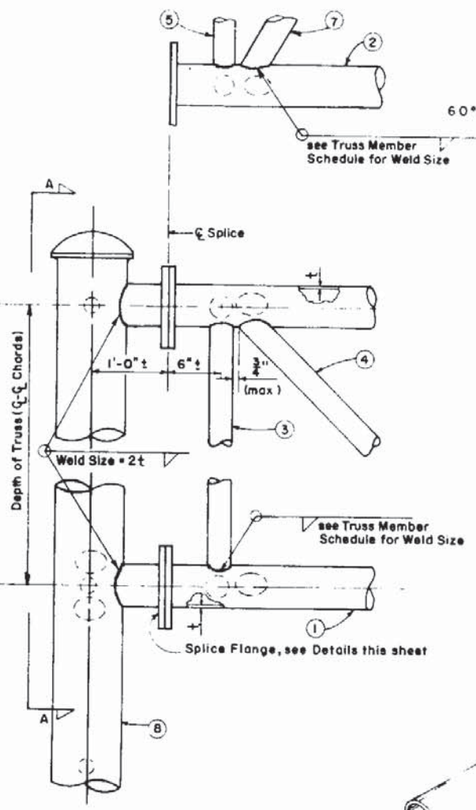

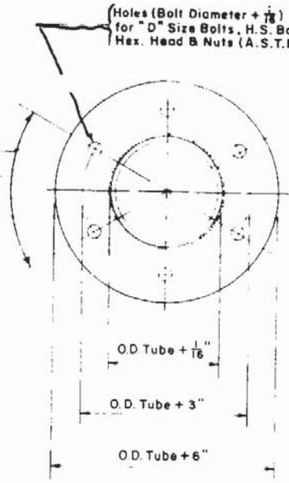

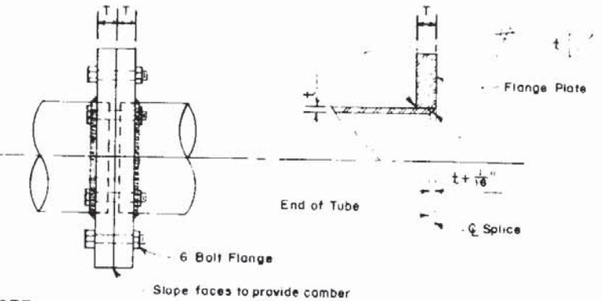

NOTE

The number of Chord Splices may be changed or omitted as necessary to facilitate fabrication and or erection

SPLICE PLATE FLANGE TABLE		
TUBE SIZE	T	BOLT SIZE "D"
$2\frac{3}{4}" \times \frac{1}{8}"$ to $6\frac{1}{2}" \times \frac{1}{4}"$	$1\frac{1}{4}"$	$\frac{5}{8}"\phi$
$7" \times \frac{1}{4}"$ to $9" \times \frac{1}{4}"$	$1\frac{1}{4}"$	$\frac{3}{4}"\phi$
$7\frac{1}{2}" \times \frac{5}{16}"$ to $9\frac{5}{8}" \times \frac{5}{16}"$	$1\frac{1}{4}"$	$\frac{7}{8}"\phi$

SPLICE PLATE FLANGE DETAILS

Aluminum Alloy 6061-T6 or 5154-H38 or Alloy 356-T7

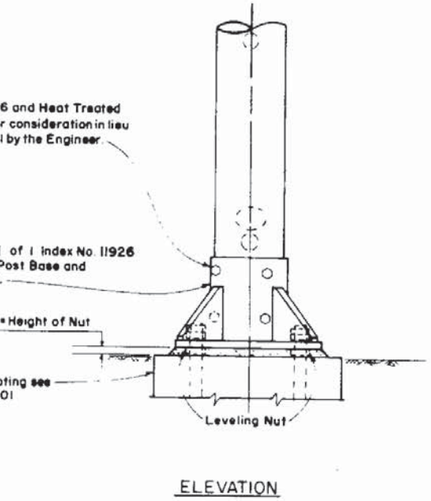

ELEVATION

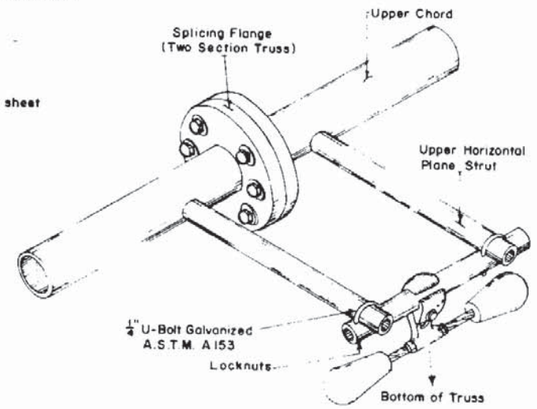

STOCKBRIDGE-TYPE DAMPER

Stockbridge-Type Damper Cat. 1708-200.1 damper placed at mid span or at the Contractor's option in lieu of this Stockbridge-Type Damper Sign Panels shall be attached at the time the structure is erected, or a temporary sign panel placed at time of erection or the overhead sign truss shall be wrapped in canvas.

SCHEDULE FILLET WELD SIZE			
TRUSS MEMBERS		POST MEMBERS	
THICKNESS	WELD SIZE	THICKNESS	WELD SIZE
$\frac{1}{8}"$	$\frac{3}{16}"$	$\frac{1}{8}"$	$\frac{1}{4}"$
$\frac{3}{16}"$	$\frac{1}{4}"$	$\frac{3}{16}"$	$\frac{5}{16}"$
$\frac{1}{4}"$	$\frac{3}{8}"$	$\frac{1}{4}"$	$\frac{3}{8}"$
$\frac{5}{16}"$	$\frac{7}{16}"$	$\frac{5}{16}"$	$\frac{1}{2}"$
$\frac{3}{8}"$	$\frac{1}{2}"$	$\frac{3}{8}"$	$\frac{5}{8}"$
		$\frac{1}{2}"$	$\frac{3}{4}"$

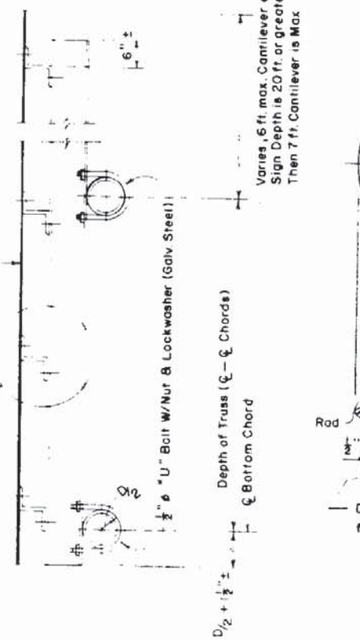

DETAIL OF SIGN FACE & TRUSS CONNECTION

See Drawing 1 of 1 Index No. 11037

GENERAL NOTES

(1) For "General Notes" Covering Specifications and Materials, see Sheet 1 of 4 Index 9535

(2) SHOP DRAWINGS: Contractor shall submit complete shop drawings before fabrication for approval

(3) COLUMN LENGTHS: It shall be the Contractor's responsibility to determine the length of column supports.

(4) Any Truss Member, Steel or Aluminum over 1/2" Thick Must meet the Longitudinal CHARPY V-NOTCH TEST.

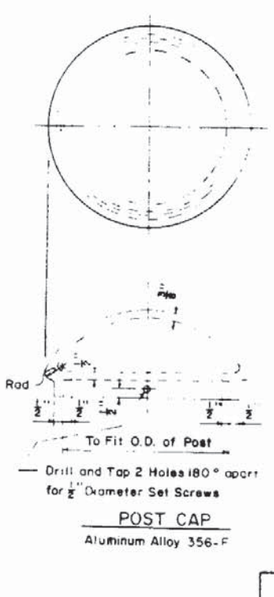

POST CAP

Aluminum Alloy 356-F

ALUMINUM TRUSSES
ASSEMBLY DETAILS FOR TYPE A, B or C TRUSS

STATE OF FLORIDA DEPARTMENT OF TRANSPORTATION
STRUCTURES

BRIDGE SPAN TRUSS FOR OVERHEAD SIGNS

REVISIONS	
Date	Description
4-72	Upper Col Strut No 1C Rev. to No 9
5-72	Sign Face & Truss Connection
8-74	NOTE 11495 ADDED
8-81	Charpy Test Added
7-82	Bolt Diameter + 1/16 Added

ROAD NO.	COUNTY	PROJECT NO.

	Names	Dates
Designed by	HAV	11-71
Checked by	CWB	11-71
Quantities by		
Checked by		
Supervised by	AJH	

APPROVED BY

Deputy Design Engineer Structures

Drawing No. 1 of 1

Index No. 10965

FED. ROAD DIV. NO.	STATE	PROJECT NO.	PROJECT VIEWS	SHEET NO.
3	FLA.			

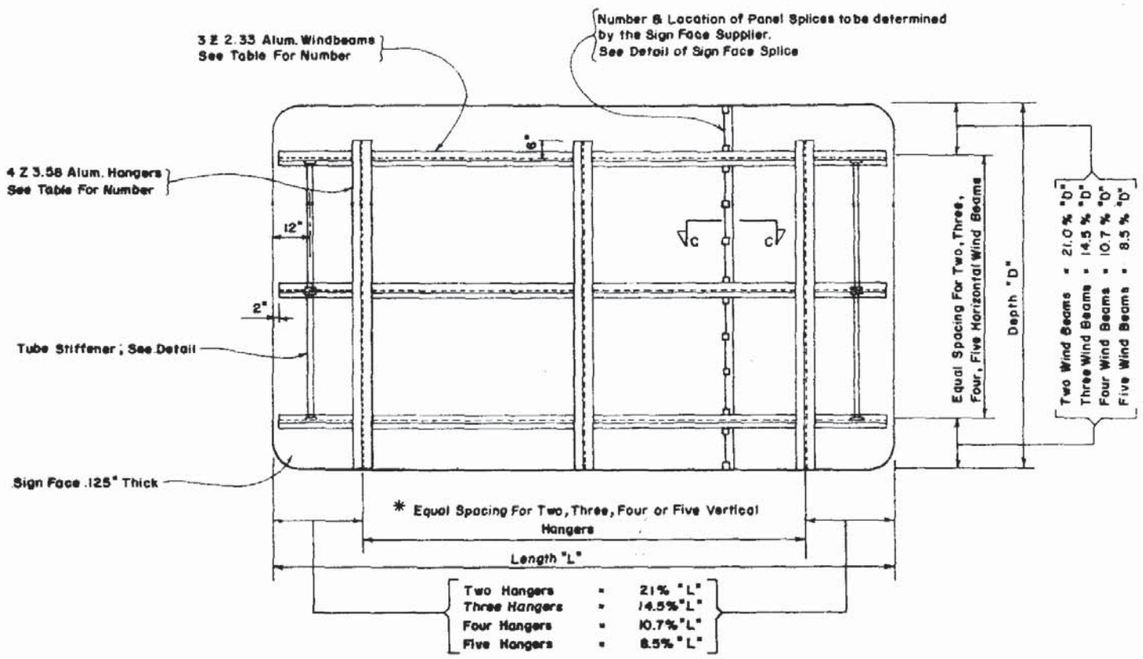

TYPICAL SIGN FACE ELEVATION FOR O.H. TRUSS

* NOTE: SPACING OF VERTICAL HANGERS MAY BE VARIED SLIGHTLY OR AS NECESSARY TO CLEAR THE TRUSS STRUTS AND DIAGONALS AT PANEL POINTS.

Number of 3 Z 2.33 Horizontal Wind Beams for Sign Depth and Wind			Number of 4 Z 3.58 Vertical Hanger Beams for Sign Length			
WIND M.P.H.	NO. BEAMS	MAX. DEPTH	2 HANGERS SIGN LENGTH	3 HANGERS SIGN LENGTH	4 HANGERS SIGN LENGTH	5 HANGERS SIGN LENGTH
110	2	7'-3"	0 - 15'-0"	15'-1" - 30'-0"	30'-1" - 45'-0"	
110	3	10'-6"	0 - 15'-0"	15'-1" - 30'-0"	30'-1" - 45'-0"	
110	4	14'-3"	0 - 13'-0"	13'-1" - 18'-3"	18'-4" - 24'-9"	24'-10" - 31'-4"
110	5	18'-0"	0 - 13'-0"	13'-1" - 18'-3"	18'-4" - 24'-9"	24'-10" - 31'-4"
100	2	8'-3"	0 - 15'-0"	15'-1" - 30'-0"	30'-1" - 45'-0"	
100	3	11'-9"	0 - 15'-0"	15'-1" - 22'-3"	22'-4" - 30'-0"	30'-1" - 38'-0"
100	4	15'-9"	0 - 15'-0"	15'-1" - 22'-3"	22'-4" - 30'-0"	30'-1" - 38'-0"
100	5	20'-0"	0 - 11'-7"	11'-8" - 16'-4"	16'-5" - 22'-2"	22'-3" - 28'-0"
90	2	9'-0"	0 - 15'-0"	15'-1" - 30'-0"	30'-1" - 45'-0"	
90	3	13'-0"	0 - 15'-0"	15'-1" - 27'-3"	27'-4" - 37'-0"	
90	4	17'-6"	0 - 15'-0"	15'-1" - 27'-3"	27'-4" - 37'-0"	
90	5	22'-6"	0 - 14'-3"	14'-4" - 20'-0"	20'-1" - 27'-0"	27'-1" - 34'-3"
80	2	10'-3"	0 - 15'-0"	15'-1" - 30'-0"	30'-1" - 45'-0"	
80	3	14'-9"	0 - 15'-0"	15'-1" - 30'-0"	30'-1" - 45'-0"	
80	4	20'-0"	0 - 15'-0"	15'-1" - 25'-9"	25'-10" - 34'-10"	

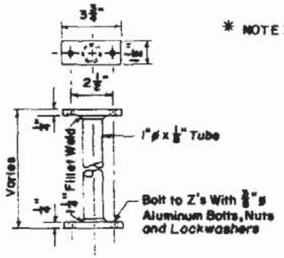

STIFFENER DETAIL

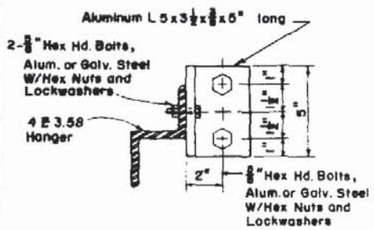

SECTION B-B

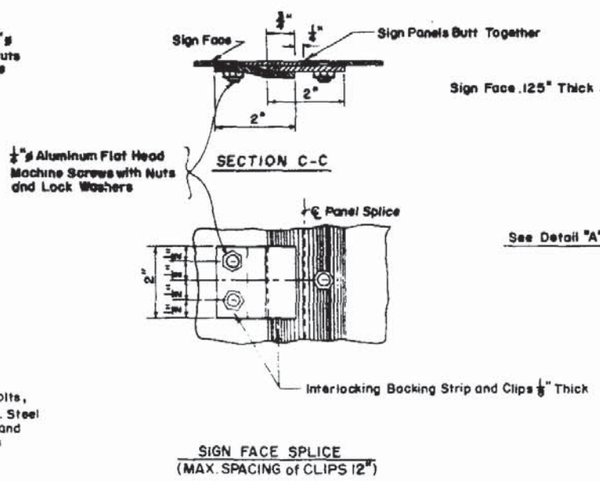

SIGN FACE SPLICE
(MAX. SPACING of CLIPS 12")

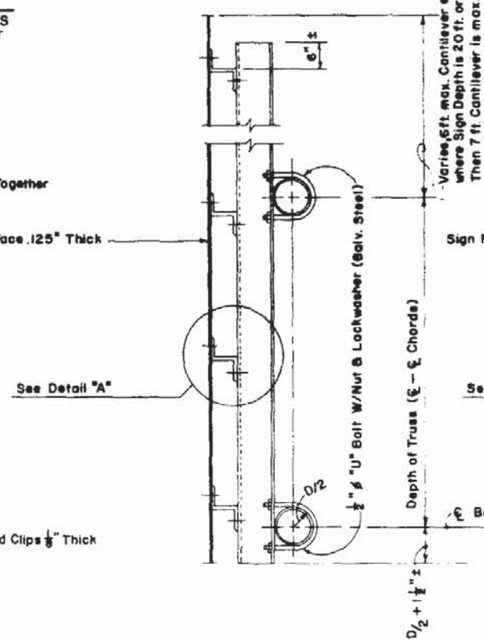

TYPICAL DETAIL OF SIGN & TRUSS CONNECTION FOR ROUND CHORD MEMBERS

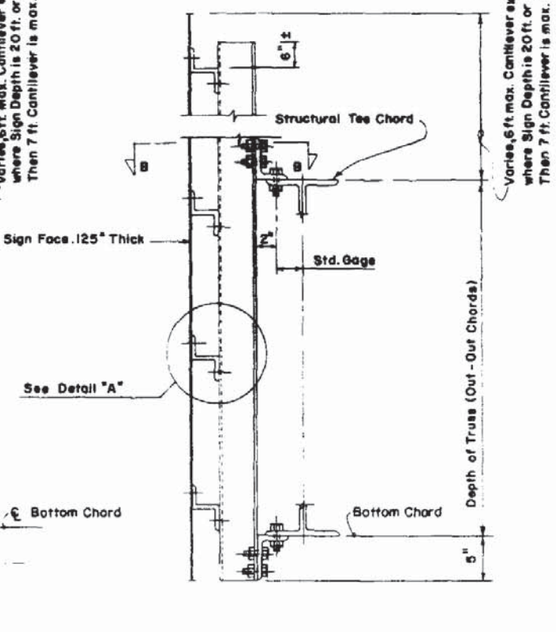

TYPICAL DETAIL OF SIGN & TRUSS CONNECTION FOR ROLLED STRUCTURAL SHAPES

(LIGHTING NOT SHOWN)

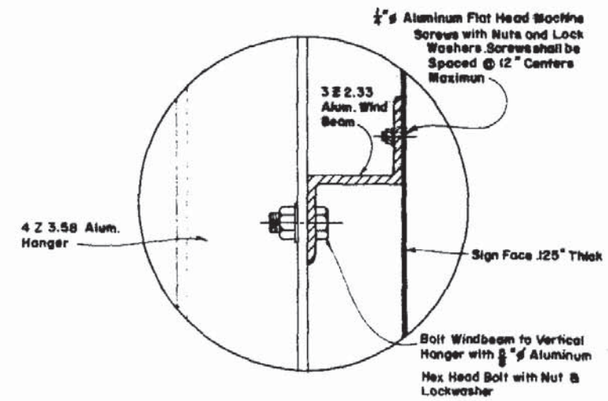

DETAIL "A"
(SHOWING ATTACHMENT OF SIGN FACE PANEL TO VERTICAL HANGER SUPPORTS)

GENERAL NOTES

(1) For "General Notes" Covering Specification, Materials and Wind Loads; see Sheets 1 of 4 and 3 of 4, Index 9535

DETAILS OF SIGN FACE & TRUSS CONNECTION

STATE OF FLORIDA DEPARTMENT OF TRANSPORTATION
STRUCTURES

FOR ALUMINUM & STEEL OVERHEAD SIGN STRUCTURES

REVISIONS		ROAD NO.	COUNTY	PROJECT NO.
Dates	Descriptions			
3-74	Rev. Round HD. Bolts to Flat HD. Machine Screws			
5-76	REV. WIND LOADING			
1-78	REV. Truss Connection Note			

	Names	Dates
Designed by	C.W.B.	5-72
Checked by	A.J.H.	5-72
Quantities by		
Checked by		
Approved by		

APPROVED BY: T. [illegible] Deputy Design Engineer, Structures

Drawing No. 1 of 1 | Index No. 11037

FOOTING DESIGNATION	FOOTING DIMENSIONS			BILL OF VARYING REINFORCING							
	DIMENSIONS			BARS A				BARS B			
	A	B	C	SIZE	LENGTH	SPACING	NO. REQ'D.	SIZE	LENGTH	SPACING	NO. REQ'D.
T-1	9'-0"	3'-6"	1'-6"	6	8'-6"	9"	5	6	3'-0"	17"	7
T-2	11'-6"	4'-3"	1'-6"	6	11'-0"	9"	6	5	3'-9"	12"	12
T-3	13'-0"	5'-0"	1'-6"	6	12'-6"	9"	7	6	4'-6"	15"	11
T-4	14'-6"	5'-6"	1'-6"	7	14'-0"	12"	6	5	5'-0"	12"	15
T-5	15'-6"	6'-0"	1'-9"	8	15'-0"	11"	7	5	5'-6"	12"	16
T-6	16'-6"	6'-3"	1'-9"	8	16'-0"	11 1/2"	7	5	5'-9"	12"	17
T-7	17'-6"	6'-6"	1'-9"	8	17'-0"	12"	7	5	6'-0"	12"	18
T-8	18'-6"	6'-9"	1'-9"	7	18'-0"	7 1/2"	11	5	6'-3"	12"	19
T-9	19'-0"	7'-3"	1'-9"	8	18'-6"	9"	10	6	6'-9"	17"	14
T-10	19'-6"	7'-9"	1'-9"	8	19'-0"	7 1/4"	13	5	7'-3"	12"	20
T-11	20'-0"	7'-9"	2'-0"	8	19'-6"	7 1/4"	13	6	7'-3"	18"	14
T-12	20'-6"	8'-0"	2'-0"	10	20'-0"	12"	9	5	7'-6"	12"	21
T-13	21'-0"	8'-3"	2'-0"	8	20'-6"	7 3/8"	13	5	7'-9"	10 1/4"	25
T-14	21'-6"	8'-6"	2'-0"	10	21'-0"	12"	9	5	8'-0"	12"	22
T-15	22'-0"	8'-9"	2'-0"	10	21'-6"	11"	10	5	8'-3"	10 3/4"	25
T-16	22'-6"	9'-0"	2'-0"	8	22'-0"	6"	18	5	8'-6"	12"	23
T-17	23'-0"	9'-0"	2'-0"	10	22'-6"	8 1/2"	13	5	8'-6"	10"	28
T-18	23'-6"	9'-3"	2'-0"	10	23'-0"	8 3/4"	13	5	8'-9"	12	24
T-19	24'-0"	9'-3"	2'-0"	11	23'-6"	8 3/4"	13	5	8'-9"	11 3/4"	25
T-20	24'-6"	9'-6"	2'-0"	11	24'-0"	9"	13	5	9'-0"	12"	25
T-21	25'-0"	9'-6"	2'-0"	11	24'-6"	9"	13	6	9'-0"	14"	22
T-22	25'-0"	9'-9"	2'-0"	11	24'-6"	9 1/4"	13	6	9'-3"	14"	22
T-23	25'-0"	10'-0"	2'-0"	11	24'-6"	9 1/2"	13	6	9'-6"	14"	22
T-24	25'-6"	9'-9"	2'-0"	10	25'-0"	6 15/16"	17	5	9'-3"	12"	26
T-25	25'-6"	10'-0"	2'-0"	10	25'-0"	6"	20	5	9'-6"	12"	26
T-26	26'-0"	9'-9"	2'-0"	11	25'-6"	6 15/16"	17	6	9'-3"	18"	18
T-27	26'-0"	10'-0"	2'-0"	10	25'-6"	6"	20	6	9'-6"	18"	18
T-28	26'-6"	10'-0"	2'-0"	10	26'-0"	6"	20	5	9'-6"	12"	27
T-29	27'-0"	10'-0"	2'-0"	10	26'-6"	6"	20	5	9'-6"	13 3/4"	25
T-30	27'-6"	10'-0"	2'-0"	11	27'-0"	6"	20	5	9'-6"	12"	28
T-31	28'-0"	9'-9"	2'-0"	11	27'-6"	6 1/2"	18	5	9'-3"	10"	34
T-32	28'-0"	10'-0"	2'-0"	11	27'-6"	6"	20	5	9'-6"	10"	34
T-33	28'-6"	9'-9"	2'-0"	10	28'-0"	4 5/8"	25	5	9'-3"	12"	29
T-34	28'-6"	10'-0"	2'-0"	11	28'-0"	6"	20	5	9'-6"	12"	29
T-35	29'-0"	9'-9"	2'-0"	10	28'-6"	4 5/8"	25	6	9'-3"	18"	20
T-36	29'-0"	10'-0"	2'-0"	11	28'-6"	6"	20	6	9'-6"	18"	20
T-37	29'-6"	9'-9"	2'-0"	10	29'-0"	4 5/8"	25	5	9'-3"	12"	30
T-38	29'-6"	10'-0"	2'-0"	11	29'-0"	6"	20	5	9'-6"	12"	30
T-39	30'-0"	9'-9"	2'-0"	11	29'-6"	5 1/2"	21	6	9'-3"	14 3/4"	25
T-40	30'-0"	10'-0"	2'-0"	11	29'-6"	5 7/16"	22	6	9'-6"	14 3/4"	25

BENDING DIAGRAMS

NOTE: All dimensions are out-to-out.

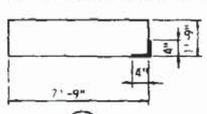

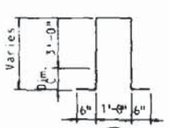

BILL OF CONSTANT REINFORCING

MARK	SIZE	LENGTH	NO. REQ'D.	DIAGRAM NO.
C	4	VARIES	6	(2)
D	4	19'-8"	4	(1)

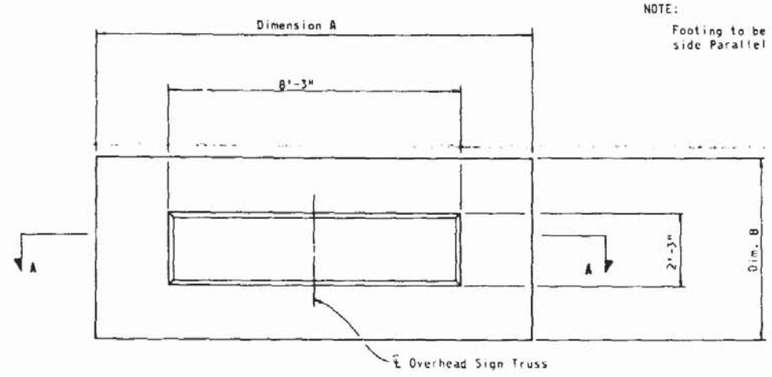

PLAN

NOTE:
Footing to be placed with longest side Parallel to Roadway.

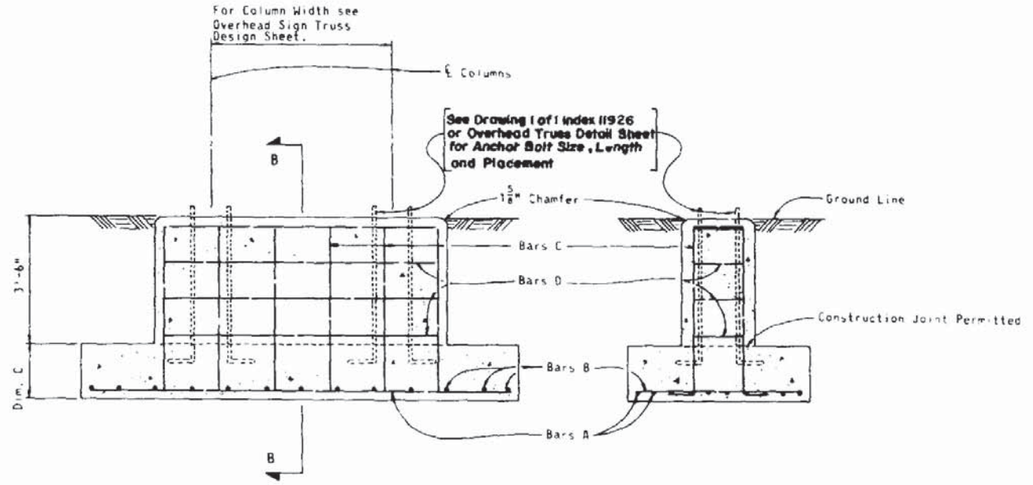

SECTION A-A

SECTION B-B

NOTES:

1. All Reinforcing Steel shall have a 3" Minimum of Concrete Cover and shall be of Grade 60.
2. All exposed edges to be Chamfered $\frac{3}{4}$" unless otherwise shown.
3. All Concrete shall be Class II. The Minimum Specified Compressive Strength at 28 days (f'c) shall be 3,400 p.s.i.
4. If Contractor elects to furnish a cast base in lieu of D.O.T. Standard Detail, he shall furnish an Anchor Bolt Spacing Plan for field use.

SHT. NO.	SHEETS	PROJECT NO.		
3	PLA.			

REVISIONS	
Date	Description
7-73	Class II Concrete Added
8-73	Rev. TITLE
9-74	Rev. Anchor Bolt Note
11-76	Rev. Concrete Strength

OVERHEAD TYPE A, B or C TRUSSES

STATE OF FLORIDA DEPARTMENT OF TRANSPORTATION
STRUCTURES

FOOTINGS FOR OVERHEAD SIGN TRUSSES

ROAD NO.	COUNTY		PROJECT NO.

	Name	Date
Designed by	D.K.S.	4/73
Checked by	C.W.B.	4/73
Quantities by		
Checked by		
Submitted by	A.J.H.	

APPROVED BY

T. Welch Jr.
Deputy Design Engineer, Structures

Drawing No.	Index No.
1 of 2	11,201

FDOT DESIGNATION	FOOTING DIMENSION			BILL OF VARYING REINFORCING							
	DIMENSION			BARS A				BARS B			
	A	B	C	SIZE	LENGTH	SPACING	NO.REQ'D.	SIZE	LENGTH	SPACING	NO.REQ'D.
C-1	10'-0"	8'-6"	1'-6"	5	9'-6"	6"	17	5	8'-0"	9 1/2"	13
C-2	11'-0"	8'-6"	1'-6"	7	10'-6"	12"	9	6	8'-0"	14"	10
C-3	12'-0"	9'-9"	1'-6"	6	11'-6"	8 1/4"	13	5	8'-9"	11 1/2"	13
C-4	13'-0"	9'-9"	1'-6"	6	12'-6"	9 1/4"	13	6	9'-3"	15"	11
C-5	14'-0"	9'-9"	1'-6"	6	13'-6"	9 1/4"	13	6	9'-3"	18"	10
C-6	15'-0"	10'-0"	1'-6"	6	14'-6"	9 1/2"	13	6	9'-6"	14 1/2"	13
C-7	16'-0"	10'-0"	1'-6"	7	15'-6"	9 1/2"	13	5	9'-6"	11 5/8"	17
C-8	17'-0"	9'-9"	1'-6"	8	16'-6"	9 1/4"	13	6	9'-3"	18"	12
C-9	17'-6"	9'-9"	1'-9"	8	17'-0"	9 1/4"	13	5	9'-3"	12"	18
C-10	18'-0"	10'-0"	1'-9"	8	17'-6"	9 1/2"	13	5	9'-6"	10"	22
C-11	19'-0"	10'-0"	1'-9"	7	18'-6"	7 1/4"	17	6	9'-6"	17"	14
C-12	20'-0"	9'-9"	1'-9"	9	19'-6"	9 1/4"	13	6	9'-3"	18"	14
C-13	20'-6"	9'-9"	1'-9"	8	20'-0"	6 15/16"	17	5	9'-3"	12"	21
C-14	21'-0"	10'-0"	1'-9"	8	20'-6"	6"	20	5	9'-6"	10 1/2"	25
C-15	22'-0"	9'-9"	1'-9"	9	21'-6"	6 15/16"	17	5	9'-3"	10 3/4"	25
C-16	22'-6"	10'-0"	1'-9"	9	22'-0"	6"	20	5	9'-6"	12"	23
C-17	23'-0"	10'-0"	1'-9"	9	22'-6"	6"	20	5	9'-6"	10"	28
C-18	24'-0"	9'-9"	1'-9"	10	23'-6"	6 15/16"	17	5	9'-3"	11 3/4"	25
C-19	24'-0"	9'-9"	2'-0"	10	23'-6"	6 15/16"	17	5	9'-3"	11 3/4"	25
C-20	24'-6"	9'-9"	2'-0"	10	24'-0"	6 15/16"	17	5	9'-3"	12"	25
C-21	24'-6"	10'-0"	2'-0"	9	24'-0"	6"	20	5	9'-6"	12"	25
C-22	25'-0"	10'-0"	2'-0"	10	24'-6"	6"	20	6	9'-6"	14"	22
C-23	25'-6"	9'-9"	2'-0"	9	25'-0"	4 5/8"	25	5	9'-3"	12"	26
C-24	25'-6"	10'-0"	2'-0"	10	25'-0"	6"	20	5	9'-6"	12"	26
C-25	26'-0"	9'-9"	2'-0"	9	25'-6"	4 5/8"	25	6	9'-3"	18"	18
C-26	26'-0"	10'-0"	2'-0"	10	25'-6"	6"	20	6	9'-6"	18"	18
C-27	26'-6"	9'-9"	2'-0"	11	26'-0"	6 15/16"	17	5	9'-3"	12"	27
C-28	26'-6"	10'-0"	2'-0"	10	26'-0"	6"	20	5	9'-6"	12"	27
C-29	27'-0"	9'-9"	2'-0"	11	26'-6"	6 15/16"	17	6	9'-3"	16 11/16"	20
C-30	27'-0"	10'-0"	2'-0"	11	26'-6"	6"	20	6	9'-6"	16 11/16"	20
C-31	27'-6"	9'-9"	2'-0"	10	27'-0"	4 5/8"	25	5	9'-3"	12"	28
C-32	27'-6"	10'-0"	2'-0"	11	27'-0"	6"	20	5	9'-6"	12"	28
C-33	28'-0"	9'-9"	2'-0"	10	27'-6"	4 5/8"	25	5	9'-3"	10"	34
C-34	28'-0"	10'-0"	2'-0"	11	27'-6"	6"	20	5	9'-6"	10"	34
C-35	28'-6"	9'-9"	2'-0"	10	28'-0"	4 5/8"	25	5	9'-3"	12"	29
C-36	28'-6"	10'-0"	2'-0"	11	28'-0"	6"	20	5	9'-6"	12"	29
C-37	29'-0"	9'-9"	2'-0"	10	28'-6"	4 5/8"	25	6	9'-3"	18"	20
C-38	29'-0"	10'-0"	2'-0"	10	28'-6"	4 3/4"	25	6	9'-6"	18"	20
C-39	29'-6"	9'-9"	2'-0"	10	29'-0"	4 5/8"	25	5	9'-3"	12"	30
C-40	29'-6"	10'-0"	2'-0"	11	29'-0"	4 3/4"	25	5	9'-6"	12"	30

BILL OF CONSTANT REINFORCING			
MARK	SIZE	LENGTH	NO. REQ'D.
C	4	3'-0"+2	22
D	4	9'-0"	12
E	4	9'-0"	13

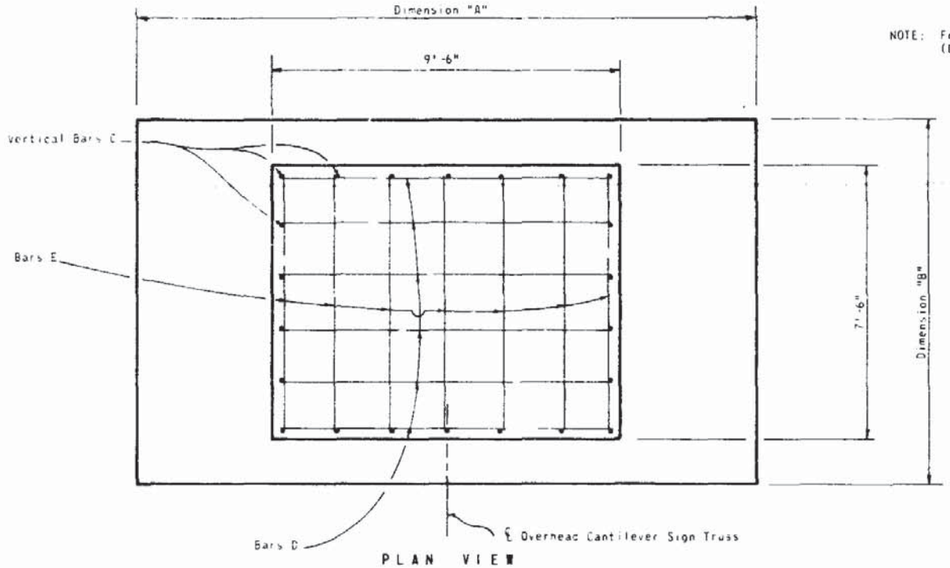

NOTE: Footing to be placed with longest side (Dim. A) parallel to Roadway.

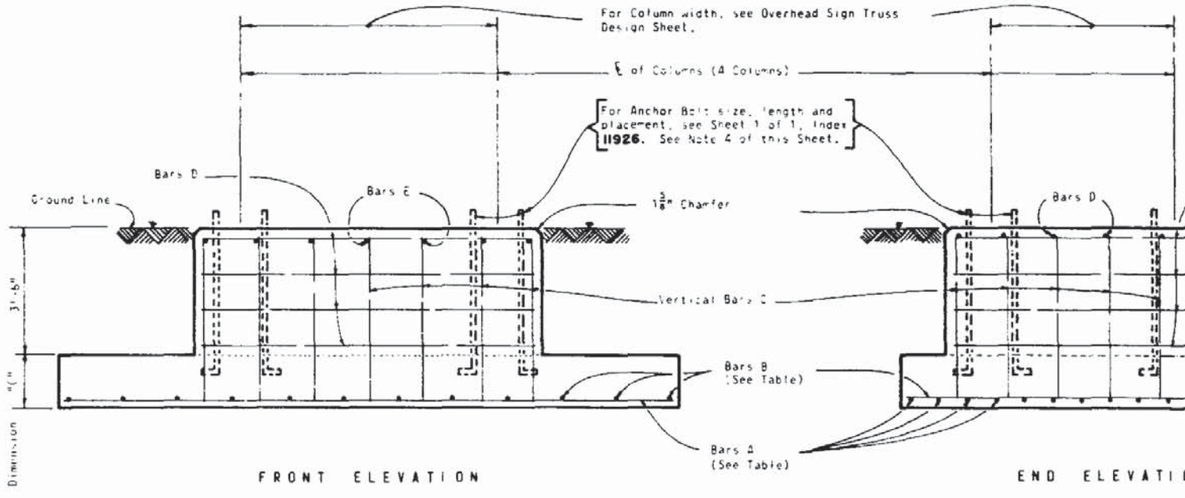

NOTES:

1. All Reinforcing Steel shall have a 3" Minimum of Concrete Cover and shall be of Grade 60.
2. All exposed edges to be Chamfered 3/4" unless otherwise shown.
3. All Concrete shall be Class II. The Minimum Specified Compressive Strength at 28 days (f'c) shall be 3,400 p.s.i.
4. If Contractor elects to furnish a cast base in lieu of D.O.T. Standard Details, he shall furnish an Anchor Bolt Spacing Plan for field use.

REVISIONS	
Date	Description
7-73	Class II Concrete Added
8-73	Rev. Anchor Bolt Note
8-73	Rev. TITLE
11-73	Rev. Pedestal Dimension & Bill of Constant Reinforcing
11-78	Rev. Concrete Strength

FED. ROAD NO.	STATE	PROJECT NO.	FISCAL YEAR	SHEET NO.
3	FLA.			

OVERHEAD CANTILEVER TRUSSES

STATE OF FLORIDA DEPARTMENT OF TRANSPORTATION STRUCTURES

FOOTINGS FOR OVERHEAD SIGN TRUSSES

ROAD NO.	COUNTY	PROJECT NO.

	Names	Date
Designed by	D.K.S.	4/73
Checked by	C.W.B.	4/73
Quantities by		
Checked by		
Supervised by	A.J.H.	

APPROVED BY: T. Ott, Jr. — Deputy Design Engineer, Structures

Drawing No.	Index No.
2 of 2	11,201

FED. ROAD DIV. NO.	STATE	PROJECT NO.	FINANCIAL PROJECT	SHEET NO.
3	FLA.			

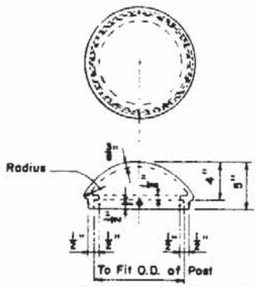

Drill & Tap 2 Holes 180° apart for $\frac{1}{2}$" Dia. set screws.

POST CAP
Aluminum Alloy 356-F

SCHEDULE FILLET WELD SIZE			
TRUSS MEMBERS		POST MEMBERS	
THICKNESS	WELD SIZE	THICKNESS	WELD SIZE
$\frac{1}{8}$"	$\frac{3}{16}$"	$\frac{1}{8}$"	$\frac{1}{4}$"
$\frac{3}{16}$"	$\frac{1}{4}$"	$\frac{3}{16}$"	$\frac{5}{16}$"
$\frac{1}{4}$"	$\frac{5}{16}$"	$\frac{1}{4}$"	$\frac{3}{8}$"
		$\frac{5}{16}$"	$\frac{1}{2}$"
		$\frac{3}{8}$"	$\frac{5}{8}$"
		$\frac{1}{2}$"	$\frac{3}{4}$"

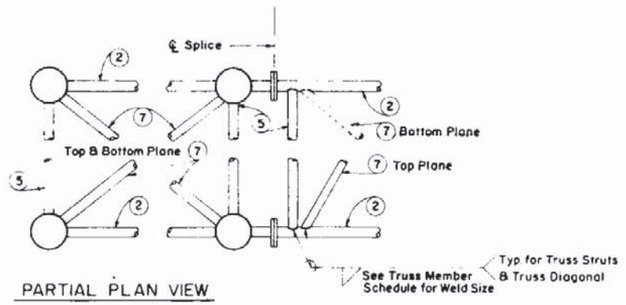

PARTIAL PLAN VIEW

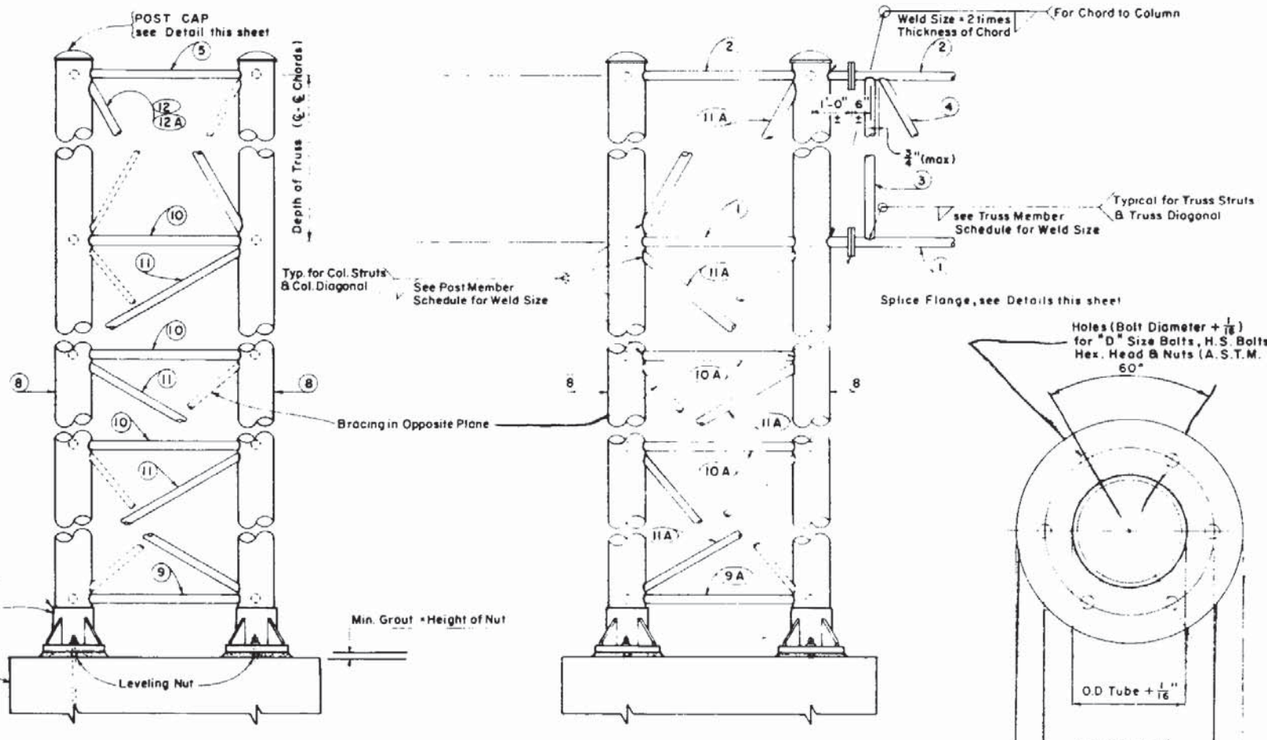

END VIEW

PARTIAL ELEVATION

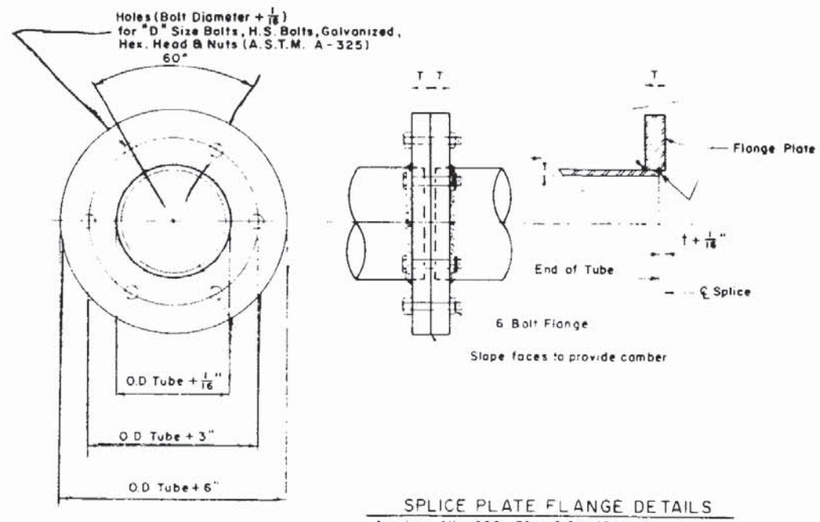

SPLICE PLATE FLANGE DETAILS
Aluminum Alloy 6061-T6 or 5154-H38 or Alloy 356-T6

GENERAL NOTES

(1) For "General Notes" Covering Specifications and Materials, see Sheet 1 of 4 Index 9535
(2) SHOP DRAWINGS: Contractor shall submit complete shop drawings before fabrication for approval
(3) COLUMN LENGTHS: It shall be the Contractor's responsibility to determine the length of Column Supports
(4) DETAIL of SIGN FACE & TRUSS CONNECTION: see Drawing 1 of 1 Index No. 11037
(5) Any Truss Member, Steel or Aluminum over $\frac{1}{2}$" Thick Must meet the Longitudinal CHARPY V-NOTCH TEST.

SPLICE PLATE FLANGE TABLE		
TUBE SIZE	T	BOLT SIZE "D"
$2\frac{3}{4}$" x $\frac{1}{8}$" to $6\frac{1}{2}$" x $\frac{1}{4}$"	$1\frac{1}{4}$"	$\frac{5}{8}$" ø
7" x $\frac{1}{4}$" to 9" x $\frac{1}{4}$"	$1\frac{1}{4}$"	$\frac{3}{4}$" ø
$7\frac{1}{2}$" x $\frac{5}{16}$" to $9\frac{1}{2}$" x $\frac{5}{16}$"	$1\frac{1}{4}$"	$\frac{7}{8}$" ø

REVISIONS	
Date	Description
5-77	MLS 6351 Bare Alum. Welded
3-77	Walkway Detail Note Added
" 78	Walkway Note Removed
8-81	Charpy Test Added
" 82	Bolt Diameter + 1/16 Added

ALUMINUM CANTILEVER

STATE OF FLORIDA DEPARTMENT OF TRANSPORTATION STRUCTURES

TRUSSES FOR OVERHEAD SIGNS

ROAD NO.	COUNTY	PROJECT NO.

	Name	Date
Designed by	HAV	3-73
Checked by	CWB	3-73
Quantities by		
Checked by		
Supervised by	AJH	

APPROVED BY

Assist. Design Engineer

Drawing No. 1 of 1

Index No. 11226

Sign Identification Number	SIGN PROFILE - SIZE	SQ.FT.	TYPE OF SIGN BRACKET WIND ZONE 60	70	80	90
	BID ITEM NO. 700-1-1 YIELD					
1	▽ 24x24	1.7	2-I	2-I	2-I	2-I
2	▽ 30x30	2.7	2-I	2-I	2-I	2-I
3	▽ 36x36	3.9	2-I	2-I	2-I	2-I
4	▽ 48x48	6.9	2-I	2-II	2-II	2-II
5	▽ 60x60	10.8	2-II	2-II	3-II	3-II
	BID ITEM NO. 700-1-2 RAILROAD					
6	○ 36"ø	7.1	2-I	2-I	2-I	2-I
7	○ 48"ø	12.6	2-I	2-II	2-II	2-II
	BID ITEM NO. 700-1-3 STOP					
8	⬡ 18x18	1.9	2-I	2-I	2-I	2-I
9	⬡ 24x24	3.3	2-I	2-I	2-I	2-I
10	⬡ 30x30	5.2	2-I	2-I	2-I	2-I
11	⬡ 36x36	7.5	2-I	2-I	2-I	2-I
12	⬡ 48x48	13.3	2-I	2-II	2-II	2-II
	BID ITEM NO. 700-1-4 RT. MARKER SINGLE					
13	12x24 / 24x24	5.4	1-I / 2-I	1-I / 2-I	1-I / 2-I	1-I / 2-I
14	15x30 / 24x24	6.5	1-I / 2-I	1-I / 2-I	1-I / 2-I	1-I / 2-I
15	12x24 / 24x30	6.3	1-I / 2-I	1-I / 2-I	1-I / 2-I	1-I / 2-I
16	15x30 / 24x30	7.4	1-I / 2-I	1-I / 2 I	1-I / 2-I	1-I / 2-I
17	15x30 / 36x36	10.8	1-I / 2-I	1-I / 2-I	1-I / 2-I	1-I / 2-I
18	15x30 / 36x45	12.6	1-I / 2-I	1-I / 2-I	1-I / 2-II	1-I / 2-II
19	15x30 / 48x48	16.7	1-I / 2-I	1-I / 2-II	1-I / 2-II	1-I / 2-II
20	15x30 / 48x60	20.1	1-I / 2-II	1-I / 2-II	1-I / 2-II	1-I / 2-II
21	12x24 / 24x24 / 15x21	7.6	1-I / 2-I / 1-I	1-I / 2-I / 1-I	1-I / 2-I / 1-I	1-I / 2-I / 1-I
22	15x30 / 24x24 / 15x21	8.7	1-I / 2-I / 1-I	1-I / 2-I / 1-I	1-I / 2-I / 1-I	1-I / 2-I / 1-I
23	12x24 / 24x30 / 15x21	8.5	1-I / 2-I / 1-I	1-I / 2-I / 1-I	1-I / 2-I / 1-I	1-I / 2-I / 1-I
24	15x30 / 24x30 / 15x21	9.6	1-I / 2-I / 1-I	1-I / 2-I / 1-I	1-I / 2-I / 1-I	1-I / 2-I / 1-I
25	12x24 / 24x24	6.0	1-I / 2-I	1-I / 2-I	1-I / 2-I	1-I / 2-I
26	24x24 / 15x21	6.2	2-I / 1-I	2-I / 1-I	2-I / 1-I	2-I / 1-I
27	15x30 / 24x24	7.1	1-I / 2-I	1-I / 2-I	1-I / 2-I	1-I / 2-I
28	12x24 / 24x30	7.0	1-I / 2-I	1-I / 2-I	1-I / 2-I	1-I / 2-I

Sign Identification Number	SIGN PROFILE - SIZE	SQ.FT.	TYPE OF SIGN BRACKET WIND ZONE 60	70	80	90
29	24x30 / 15x21	7.2	2-I / 1-I	2-I / 1-I	2-I / 1-I	2-I / 1-I
30	15x30 / 24x30	8.1	1-I / 2-I	1-I / 2-I	1-I / 2-I	1-I / 2-I
31	15x21 / 36x30	9.7	1-I / 2-I	1-I / 2-I	1-I / 2-I	1-I / 2-I
32	15x30 / 36x30	10.6	1-I / 2-I	1-I / 2-I	1-I / 2-I	1-I / 2-I
33	12x24 / 24x24 / 15x21	8.2	1-I / 2-I / 1-I	1-I / 2-I / 1-I	1-I / 2-I / 1-I	1-I / 2-I / 1-I
34	15x30 / 24x24 / 15x21	9.3	1-I / 2-I / 1-I	1-I / 2-I / 1-I	1-I / 2-I / 1-I	1-I / 2-I / 1-I
35	12x24 / 24x30 / 15x21	9.2	1-I / 2-I / 1-I	1-I / 2-I / 1-I	1-I / 2-I / 1-I	1-I / 2-I / 1-I
36	15x30 / 24x30 / 15x21	10.3	1-I / 2-I / 1-I	1-I / 2-I / 1-I	1-I / 2-I / 1-I	1-I / 2-I / 1-I
	BID ITEM NO. 700-1-5 RT. MARKER DOUBLE					
37	12x24,12x24 / 24x24,24x24 / 15x21	13.6	1-II / 2-II / 1-I	1-II / 2-II / 1-I	1-II / 2-II / 1-I	1-II / 2-II / 1-I
38	12x24,12x24 / 24x24,24x24 / 15x21,15x21	15.2	1-II / 2-II / 1-II	1-II / 2-II / 1-II	1-II / 2-II / 1-II	1-II / 2-II / 1-II
39	12x24,12x24 / 24x24,24x24 / 15x21,15x21	16.4	1-II / 2-II / 1-II	1-II / 2-II / 1-II	1-II / 2-II / 1-II	1-II / 2-II / 1-II
40	15x30,15x30 / 24x30,24x30 / 15x21,15x21	19.2	1-II / 2-II / 1-II	1-II / 2-II / 1-II	1-II / 2-II / 1-II	1-II / 2-II / 1-II
41	12x24,12x24 / 12x24,12x24 / 24x24,24x24 / 15x21,15x21	20.4	1-II / 1-II / 2-II / 1-II	1-II / 1-II / 2-II / 1-II	1-II / 1-II / 2-II / 1-II	1-II / 1-II / 2-II / 1-II
42	15x21 / 24x24 / 12x24,12x24 / 24x24,24x24 / 15x21,15x21	22.6	1-I / 2-I / 1-II / 2-II / 1-II	1-I / 2-I / 1-II / 2-II / 1-II	1-I / 2-I / 1-II / 2-II / 1-II	1-I / 2-I / 1-II / 2-II / 1-II
43	12x24 / 24x30 / 15x21 / 12x24,12x24 / 24x24,24x24 / 15x21,15x21	25.6	1-I / 2-I / 1-I / 1-II / 2-II / 1-II	1-I / 2-I / 1-I / 1-II / 2-II / 1-II	1-I / 2-I / 1-I / 1-II / 2-II / 1-II	1-I / 2-I / 1-I / 1-II / 2-II / 1-II
	BID ITEM NO. 700-1-10, 3 SQ.FT. OR LESS					
44	18x12	1.5	2-I	2-I	2-I	2-I
45	12x36	3.0	1-I	1-I	1-I	1-I
46	18x24	3.0	2-I	2-I	2-I	2-I
47	24x18	3.0	2-I	2-I	2-I	2-I
48	18x18 / 9x12	3.0	2-I / 1-I	2-I / 1-I	2-I / 1-I	2-I / 1-I
	BID ITEM NO. 700-1-11, 3+ TO 4 SQ.FT.					
49	18x30	3.8	2-I	2-I	2-I	2-I
50	30x40	3.9	2-I	2-I	2-I	2-I
51	24x24	4.0	2-I	2-I	2-I	2-I

Sign Identification Number	SIGN PROFILE - SIZE	SQ.FT.	TYPE OF SIGN BRACKET WIND ZONE 60	70	80	90
52	◇ 24x24	4.0	2-I	2-I	2-I	2-I
	BID ITEM NO. 700-1-12, 4+ TO 5 SQ.FT.					
53	18x36	4.5	2-I	2-I	2-I	2-I
54	⌂ 30x30	4.7	2-I	2-I	2-I	2-I
55	30x24	5.0	2-I	2-I	2-I	2-I
	BID ITEM NO. 700-1-13, 5+ TO 6 SQ.FT.					
56	▷ 36x48	5.6	2-II	3-II	3-II	3-II
57	24x36	6.0	2-I	2-I	2-I	2-I
58	36x24	6.0	2-I	2-I	2-I	2-I
	BID ITEM NO. 700-1-14, 6+ TO 6.25 SQ.FT.					
59	30x30	6.3	2-I	2-I	2-I	2-I
60	◇ 30x30	6.3	2-I	2-I	2-I	3-II
	BID ITEM NO. 700-1-15, 6.25+ TO 9 SQ.FT.					
61	⌂ 36x36	6.75	2-I	2-I	2-I	2-I
62	30x36	7.5	2-I	2-I	2-I	2-I
63	36x30	7.5	2-I	2-I	2-I	2-I
64	24x48	8.0	2-II	2-II	2-II	2-II
65	12x36 / 30x30	8.2	1-I / 2-I	1-I / 2-I	1-I / 2-I	1-I / 2-I
66	30x42	8.8	2-I	2-I	2-I	2-II
67	36x36	9.0	2-I	2-I	2-I	2-I
68	◇ 36x36	9.0	3-II	3-II	3-II	3-II
	BID ITEM NO. 700-1-16, 9+ TO 12 SQ. FT.					
69	12x36 / 30x30	9.3	1-I / 2-I	1-I / 2-I	1-I / 2-I	1-I / 2-I
70	◇ 30x30 / 18x24	9.3	2-I / 2-I	2-I / 2-I	2-I / 2-I	3-II / 2-I
71	▷ 48x64	9.9	3-II	3-II	3-II	3-II
72	30x48	10.0	2-I	2-II	2-II	2-II
73	○ 12x36 / 36x36	10.5	1-I / 2-I	1-I / 2-I	1-I / 2-I	1-I / 2-I
74	30x54 (2-6x4-6)	11.3	2-II	2-II	2-II	2-II
75	36x48 (3-0x4-0)	12.0	2-I	2-II	2-II	2-II
76	48x36 (4-0x3-0)	12.0	2-I	2-I	2-I	2-I
77	◇ 36x36 / 18x24	12.0	3-II / 2-I	3-II / 2-I	3-II / 2-I	3-II / 2-I
78	⌂ 48x48	12.0	2-I	2-II	2-II	2-II
	BID ITEM NO. 700-1-17, 12+ TO 16 SQ.FT.					
79	30x60 (2-6x5-0)	12.5	2-II	2-II	2-II	2-II
80	48x48 (4-0x4-0)	16.0	2-I	2-II	2-II	2-II
81	◇ 48x48 (4-0x4-0)	16.0	3-II	3-II	3-II	3-II
	BID ITEM NO. 700-1-18, 16+ TO 20 SQ.FT.					
82	30x78 (2-6x6-6)	16.3	2-II	2-II	2-II	2-II
83	30x84 (2-6x7-0)	17.5	2-II	2-II	2-II	2-II
84	48x54 (4-0x4-6)	18.0	2-II	2-II	2-II	2-II
85	42x66 (3-6x5-6)	19.3	2-II	2-II	2-II	2-II
86	60x48 (5-0x4-0)	20.0	2-II	2-II	3-II	3-II

SHOP DRAWING NOTE: When Type "C" Ground Sign Supports are Furnished and Fabricated in Accordance with These Plans, Shop Drawings Will Not be Required for Approval by the Engineer.

Sign Identification Number	SIGN PROFILE - SIZE	SQ.FT.	TYPE OF SIGN BRACKET WIND ZONE 60	70	80	90
	BID ITEM NO. 700-1-19, 20+ TO 32 SQ.FT.					
87	66x48 (5-6x4-0)	22.0	2-II	3-II	3-II	3-II
88	60x72 (5-0x6-0)	30.0	2-II	2-II	3-II	3-II
89	96x48 (8-0x4-0)	32.0	3-II	3-II	3-II	3-II
	BID ITEM NO. 700-1-20 DESTINATION, 1-LINE					
90	24x78 (2-0x6-6)	13.0	2-II	2-II	2-II	2-II
	BID ITEM NO. 700-1-21 DESTINATION, 2-LINE					
91	36x78 (3-0x6-6)	19.5	2-II	2-II	2-II	2-II

DESIGN NOTES

DESIGN SPECIFICATION: Standard Specifications for Structural Supports for Highway Signs, Luminaires and Traffic Signals A.A.S.H.T.O. 1975

MATERIALS: Aluminum Materials shall, in General, Meet the Requirements of Aluminum Association Alloy 6061-T6 (ASTM B209, B221, or B308) Permissable Alternates shall be; For sheets and Plates - Aluminum Association Alloy 5154-H38 (ASTM B209) and for Extruded Bars, Rods, Shapes and Tubes - Aluminum Association Alloy 6351-T5 (ASTM B221)

CONCRETE: All Concrete shall be Class I, The Specified Compressive Strength at 28 Days (f'c) Shall be 3,000 p.s.i. min.

SIGN PANEL: Sign Panel shall be 0.08 in. Min. Thick Aluminum Plate with all Corners Rounded. See Sign Layout Sheet. Panels are to be Degreased, Etched, Neutralized and Treated with Alodine 1200, Iridine 14-2, Bonderite 721 or Equal. No Stenciling Permitted on Panels.

ALUMINUM BOLTS, NUTS & LOCKWASHERS: Aluminum Bolts shall meet the Requirements of Aluminum Association Alloy 2024-T4 or 6061-T6 (ASTM B211). The Bolts shall have an Anodic Coating of at least 0.0002 in. Thick and be Chromate Sealed. Lockwashers shall meet the Requirements of Aluminum Association Alloy 7075-T6 (ASTM B221). Nuts shall meet the Requirements of Aluminum Association Alloy 6262-T9 or 6061-T6.

GENERAL NOTES

HOW TO USE THIS TABLE: Select the Appropriate Sign Profile and Sign Size to Determine the Sign Identification Number. If the Exact Sign Size of All Components is Not Listed, Select the Appropriate Profile and Larger Component Sizes. This Table Also Gives the Quantity and Type of Sign Brackets Required for Each Sign for Each Wind Zone.

Where the Sign Size is Given as a Vertical and Horizontal Dimension, The Vertical Dimension (Depth) is Given First and the Horizontal Dimension (Length) is Given Last

Signs 16" and Less in Depth will be Mounted with One Bracket at the ℄. Signs 18" in Depth and Over Require Two Sign Brackets.

For Column Sizes, Heights and Footings See Appropriate (Wind Zone) Sheet Titled "Column Sizes, Column Height and Column Footings."

No Shop or Field Splice Allowed in Sign Panels. All Panels to be Furnished in One Piece.

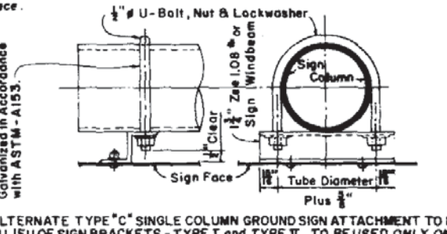

ALTERNATE TYPE "C" SINGLE COLUMN GROUND SIGN ATTACHMENT TO BE USED IN LIEU OF SIGN BRACKETS - TYPE I and TYPE II. TO BE USED ONLY ON 4½" ø and LARGER ALUMINUM TUBE COLUMNS.

WIND LOADING

ZONE NO. 1 (60 M.P.H.)

Alachua, Bradford, Baker, Bay, Calhoun, Clay, Columbia, Escambia, Gadsden, Gilchrist, Hamilton, Holmes, Jackson, Jefferson, Lafayette, Lake, Leon, Liberty, Madison, Marion, Okaloosa, Putnam, Santa Rosa, Sumter, Suwannee, Union, Walton and Washington Counties.

ZONE NO. 2 (70 M.P.H.)

Citrus, De Soto, Dixie, Duval, Flagler, Franklin, Glades, Gulf, Hardee, Hendry, Hernando, Highlands, Hillsborough, Levy, Nassau, Okeechobee, Orange, Osceola, Pasco, Pinellas, Polk, Seminole, St. Johns, Taylor and Wakulla Counties.

ZONE NO. 3 (80 M.P.H.)

Brevard, Charlotte, Collier, Indian River, Lee, Manatee, Martin, Palm Beach, Sarasota, St. Lucie and Volusia Counties.

ZONE NO. 4 (90 M.P.H.)

Broward, Dade and Monroe Counties.

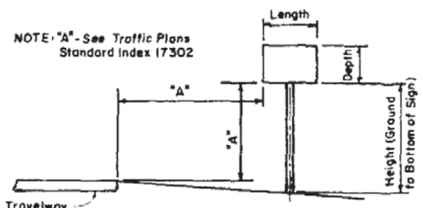

TYPICAL SECTION

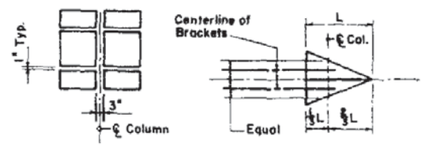

SIGN CLEARANCE

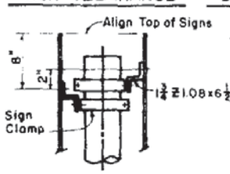

DETAILS-WI4-3 PLAQUE

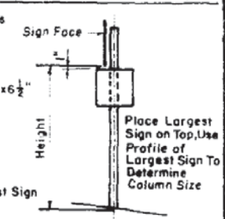

SIGNS BACK TO BACK

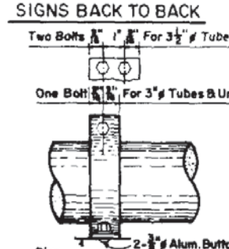

SIGNS AT 90°

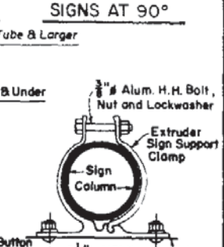

SIGN BRACKET - TYPE I

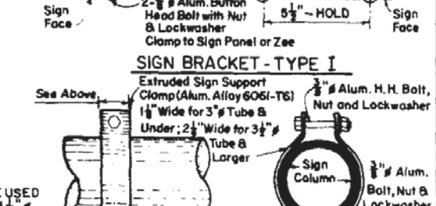

SIGN BRACKET - TYPE II

SIGN PROFILE & IDENTIFICATION NUMBERS

STATE OF FLORIDA DEPARTMENT OF TRANSPORTATION STRUCTURES

TYPE "C" SINGLE COLUMN GROUND SIGNS

REVISIONS					
Dates	Description				
8-80	GENERAL REV. 3.74				
2-82	Alternate Sign Bracket's Added				
7-82	Shop Drawing Note Added				

ROAD NO.	COUNTY	PROJECT NO.

	Names	Dates
Designed by	CK	3-76
Checked by	CWB	3-76
Quantities by		
Checked by		
Supervised by	AJH	

APPROVED BY

Deputy Design Engineer, Structures

Drawing No.	Index No.
1 of 1	11860

COL SIZE	2 x 1/8	2 1/2 x 1/8	3 x 1/8	3 1/2 x 3/16	4 x 3/16	4 x 1/4	4 1/2 x 1/4	5 x 1/4	5 1/2 x 1/4	6 x 1/4	6 1/2 x 1/4	7 x 1/4	7 1/2 x 1/4	8 x 1/4
FOOTING	0 x 2-0	0 x 2-3	0 x 2-6	0 x 3-4	0 x 3-9	1-6 x 2-1	1-6 x 2-5	1-6 x 2-9	1-6 x 3-0	1-6 x 3-3	2-0 x 3-0	2-0 x 3-4	2-0 x 3-6	2-0 x 4-0
Sign Identification Number	HEIGHT (FT.)													
1	To 14'	14±—19	19±—25											
2	To 13'	13±—18	18±—22	22±—25										
3	To 13'	13±—16	16±—21	21±—25										
4	To 6'	6±—11	11±—13	13±—23	23±—25									
5		To 6'	6±—10	10±—16	16±—21	21±—25								
6	To 6'	6±—11	11±—13	13±—23	23±—25									
7		To 6'	6—10	10±—16	16±—21	21±—25								
8	To 15'	15±—20	20±—25											
9	To 14'	14±—18	18±—22	22±—25										
10	To 10'	10±—13	13±—17	17±—25										
11	To 6'	6±—11	11±—13	13±—23	23±—25									
12		To 8'	8±—14	14±—18	18±—23	23±—25								
13	To 9'	9±—13	13±—17	17±—25										
14	To 8'	8±—13	13±—16	16±—25										
15	To 7'	7±—12	12±—14	14±—24	24±—25									
16	To 7'	7±—11	11±—14	14±—23	23±—25									
17		To 7	7±—10	10±—17	17±—21	21±—25								
18		To 9'	9±—14	14±—19	19±—23	23±—25								
19		To 7'	7±—12	12±—16	16±—20	20±—25								
20		To 11'	11±—12	12±—16	16±—20	20±—25								
21		To 8'	8±—12	12±—19	19±—25									
22		To 7'	7±—11	11±—17	17±—22	22±—25								
23		To 8'	8±—12	12±—19	19±—25									
24		To 7'	7±—11	11±—17	17±—22	22±—25								
25	To 8'	8±—13	13±—15	15±—25										
26	To 7'	7±—11	11±—14	14±—23	23±—25									
27	To 7'	7±—11	11±—14	14±—23	23±—25									
28	To 6'	6±—11	11±—13	13±—23	23±—25									
29	To 6'	6±—11	11±—13	13±—22	22±—25									
30	To 6'	6±—10	10±—13	13±—22	22±—25									
31		To 8'	8±—12	12±—19	19±—23	23±—25								
32		To 7'	7±—11	11±—18	18±—22	22±—25								
33		To 9'	9±—12	12±—20	20±—25									
34		To 7'	7±—11	11±—18	18±—23	23±—25								
35		To 9'	9±—12	12±—20	20±—25									
36		To 7'	7±—11	11±—18	18±—23	23±—25								
37		To 7'	7±—13	13±—17	17±—21	21±—25								
38		To 6'	6±—12	12±—16	16±—20	20±—24	24±—25							
39		To 6'	6±—12	12±—15	15±—18	18±—23	23±—25							
40			To 11'	11±—12	12±—16	16±—20	20±—25							
41			To 10'	10±—12	12±—14	14±—18	18±—23	23±—25						
42			To 9'	9±—11	11±—13	13±—18	18±—22	22±—25						
43			To 7'	7±—11	11±—12	12±—15	15±—19	19±—23	23±—25					
44	To 18'	18±—23	23±—25											
45	To 14'	14±—17	17±—22	22±—25										
46	To 14'	14±—17	17±—22	22±—25										
47	To 14'	14±—18	18±—22	22±—25										
48	To 13'	13±—17	17±—21	21±—25										
49	To 12'	12±—15	15±—20	20±—25										
50	To 13'	13±—16	16±—20	20±—25										
51	To 12'	12±—15	15±—20	20±—25										
52	To 12'	12±—15	15±—19	19±—25										

COL. SIZE	2 x 1/8	2 1/2 x 1/8	3 x 1/8	3 1/2 x 3/16	4 x 3/16	4 x 1/4	4 1/2 x 1/4	5 x 1/4	5 1/2 x 1/4	6 x 1/4	6 1/2 x 1/4	7 x 1/4	7 1/2 x 1/4	8 x 1/4
FOOTING	0 x 2-0	0 x 2-3	0 x 2-6	0 x 3-4	0 x 3-9	1-6 x 2-1	1-6 x 2-5	1-6 x 2-9	1-6 x 3-0	1-6 x 3-3	2-0 x 3-0	2-0 x 3-4	2-0 x 3-6	2-0 x 4-0
Sign Identification Number	HEIGHT (FT.)													
53	To 11'	11±—14	14±—18	18±—25										
54	To 10'	10±—14	14±—17	17±—25										
55	To 10'	10±—13	13±—17	17±—25										
56	To 8'	8±—13	13±—15	15±—25										
57	To 8'	8±—13	13±—15	15±—25										
58	To 8'	8±—13	13±—15	15±—25										
59	To 8'	8±—13	13±—15	15±—25										
60	To 7'	7±—12	12±—14	14±—24	24±—25									
61	To 6'	6±—10	10±—13	13±—22	22±—25									
62	To 6'	6±—10	10±—13	13±—22	22±—25									
63	To 6'	6±—11	11—13	13±—23	23±—25									
64	To 6'	6±—10	10±—14	14±—21	21±—25									
65	To 6'	6±—10	10±—13	13±—22	22±—25									
66		To 9'	9±—13	13±—20	20±—25									
67		To 9'	9±—13	13±—20	20±—25									
68		To 9'	9±—12	12±—21	21±—25									
69		To 8'	8±—13	13±—19	19±—25									
70		To 7'	7±—11	11±—18	18±—23	23±—25								
71		To 8'	8±—12	12±—19	19±—23	23±—25								
72		To 8'	8±—12	12±—18	18±—23	23±—25								
73		To 7'	7±—11	11±—18	18±—22	22±—25								
74		To 7'	7±—11	11±—17	17±—21	21±—25								
75		To 6'	6±—10	10±—16	16±—20	20±—24	24±—25							
76		To 6'	6±—10	10±—16	16±—21	21±—25								
77		To 9'	9±—15	15±—20	20±—25									
78	To 6'	6±—10	10±—16	16±—20	20±—24	24±—25								
79	To 6'	6±—10	10±—15	15±—20	20±—24	24±—25								
80		To 7'	7±—13	13±—16	16±—20	20±—25								
81		To 6'	6±—12	12±—15	15±—19	19±—24	24±—25							
82		To 7'	7±—13	13±—16	16±—20	20±—24	24±—25							
83		To 6'	6±—13	13±—15	15±—19	19±—23	23±—25							
84		To 6'	6±—13	13±—14	14±—18	18±—22	22±—25							
85			To 12'	12±—13	13±—17	17±—21	21±—25							
86			To 12'	12±—13	13±—17	17±—21	21±—25							
87			To 10'	10±—12	12±—15	15±—19	19±—24	24±—25						
88			To 7'	7±—10	10±—12	12±—14	14±—17	17±—21	21±—25					
89				To 8'	8±—11	11±—12	12±—16	16±—20	20±—24	24±—25				
90	To 6'	6±—9	9±—15	15±—19	19±—23	23±—25								
91			To 12'	12±—13	13±—17	17±—21	21±—25							

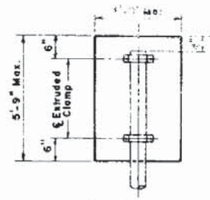

SIGN PANEL DETAILS
TYPE I BRACKET

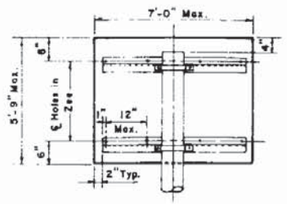

SIGN PANEL DETAILS
TYPE II BRACKET

GENERAL NOTES

1- For Sign Identification Numbers See Sheet Titled "Sign Profile and Identification Numbers". Use the Sign Identification Number and The Required Column Height to Determine The Support Column Size and Footing Size. The Heights Given in the Table are the Maximum Height (From Ground to Bottom of Sign) That A Column Size Can Be Used For A Particular Sign Profile. If the Required Column Height is Not Listed in the Table, The Sign Will Have to be Supported On Multiple Column Type "A" Breakaway Supports.

2- All Columns in the Table Are Aluminum Tube, Given as Outside Diameter Times the Wall Thickness. Size 2 x 1/8 Thru 4 x 3/16 Tube are Frangible Supports and Will Be Driven into The Ground. 4 x 3/16 Tube is The Maximum Size Frangible Support. Size 4 x 1/4 Thru 8 x 1/4 Are Breakaway Supports and Will Have Poured Concrete Footings and Slip Bases.

3- FOOTINGS: Frangible Supports - No Concrete Footing is Required. The Support Column Shall Be Driven into The Ground To The Depth Indicated. The Portion of The Support Column Which is Driven into The Ground Shall Be Painted With Cutback Asphalt - Grade RC-70.

Breakaway Supports - Footings to be Poured Concrete, Size as Shown in Table. The First Dimension Indicates The Diameter of the Footing and the Second Dimension the Depth of the Footing into the Ground. In all Cases the Ground is to be Considered as Undisturbed Earth, Road Material or Properly Compacted Fill.

SLIP BASE DETAILS

COLUMN SIZE	SLEEVE I.D.(MAX)	SLEEVE WALL "T"	SLEEVE HEIGHT	WELD "W"	BASE PLATE L x L x T	RADIUS "R"	BASE BOLT SIZE	BASE BOLT TORQUE FT-lbs	BASE BOLT TORQUE INCH-lbs	HOLE SIZE "A"
4 x 1/4	4 1/16	3/8	6"	3/8	8x8x3/4	11/32	3/8"ø x 3"	53'*	640"*	11/16
4 1/2 x 1/4	4 9/16	3/8	6"	3/8	8x8x7/8	11/32	3/8"ø x 3 1/2"	53'*	640"*	11/16
5 x 1/4	5 1/16	3/8	7"	3/8	8x8x7/8	11/32	3/8"ø x 3 1/2"	53'*	640"*	11/16
5 1/2 x 1/4	5 9/16	3/8	7"	11/16	8 1/2 x 8 1/2 x 7/8	13/32	1/2"ø x 3 1/2"	78'*	940"*	13/16
6 x 1/4	6 1/16	3/8	8"	11/16	9x9x1	13/32	1/2"ø x 3 1/2"	78'*	940"*	13/16
6 1/2 x 1/4	6 9/16	3/8	8"	3/4	9 1/2 x 9 1/2 x 1	13/32	1/2"ø x 3 1/2"	78'*	940"*	13/16
7 x 1/4	7 1/16	3/8	9"	3/4	10x10x1	13/32	1/2"ø x 3 1/2"	78'*	940"*	13/16
7 1/2 x 1/4	7 9/16	3/8	9"	3/4	10 1/2 x 10 1/2 x 1	15/32	5/8"ø x 3 3/4"	108'*	1290"*	15/16
8 x 1/4	8 1/16	3/8	10"	3/4	11x11x1	15/32	5/8"ø x 3 3/4"	108'*	1290"*	15/16

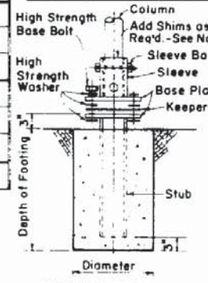

BASE DETAIL

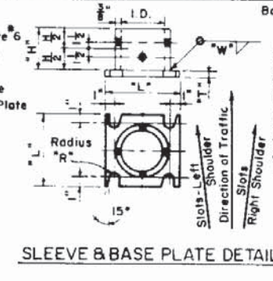

SLEEVE & BASE PLATE DETAILS

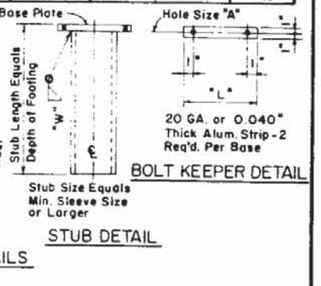

BOLT KEEPER DETAIL

STUB DETAIL

SLIP BASE NOTES

1- Inside Diameter (I.D.) of Sleeve to be no more than 1/16 Larger than Outside Diameter (O.D.) of Column.
2- Sleeve Bolts to be 1/2"ø with Locknuts, Steel A.S.T.M.-A307 Galvanized or Aluminum Assoc. Alloy 2024-T4 or 6061-T6 (ASTM B-211).
3- Base Bolts, Nuts and Washers to be ASTM-A325 High Strength Electroplated Zinc Coating Type 1, 5 Applied in Accordance with ASTM-A164.
4- An Alternate Cast Base of Aluminum Alloy 356 and T6 Temper in Lieu of the Fabricated Base may be Submitted for Approval by the Engineer. If A Cast Base is Used the Stub will be the Same Size as the Column and will be Bolted to the Casting.
5- Assemble the Slip Base Connection in the Following Manner (a) Connect Column to Sleeve Using Two 2-1/2"ø Machine Bolts (b) Assemble Top Base Plate to Stub Base Plate Using High Strength Bolts with Three (3) Hardened Washers Per Bolt. One Washer Per Bolt and Two (2) Bolt Keeper Plates Go Between the Base Plates. (c) Use Shim Stock as Required to Plumb the Column (d) Tighten All Bolts The Maximun Possible With a 12" to 15" Wrench to Bed the Washers and Shims and to Clean the Bolt Threads. Loosen Each Bolt in Turn and Retighten to the Prescribed Torque (See Table). Bolts Shall be Tightened with Properly Calibrated Wrenches Under the Supervision of the Project Engineer (e) Burr Threads at Junction with Nut Using a Center Punch to Prevent Nut Loosening.
6- Using Galvanized Steel Shims that are "H" (See Sleeve & Base Plate Details) Minus One Inch (1") Long. Shim a Tight Fit Between the Column Face and the Inside Face of the Sleeve. Place Shims in all Four Quadrants between the 1/2"ø Sleeve Bolts.

60 M.P.H. WIND LOADING

COLUMN SIZE, COLUMN HEIGHT & COLUMN FOOTINGS

STATE OF FLORIDA DEPARTMENT OF TRANSPORTATION
STRUCTURES

SINGLE COLUMN GROUND SIGNS

REVISIONS		
Dates	Descriptions	
6-80	GENERAL REVISION	
1-81	Columns Redesigned (Min. Type) Sleeve Max. Height Set at 25'-0	
4-83	Note No. 6 Added	

ROAD NO.	COUNTY	PROJECT NO.

	Names	Dates
Designed by	C.K.	3-76
Checked by	C.W.B.	3-76
Quantities by		
Checked by		
Supervised by	A.J.H.	

APPROVED BY

Deputy Dsgn. Engineer Structures

Drawing No.	Index No.
1 of 1	11861

COL. SIZE	2 x 1/8	2 1/2 x 1/8	3 x 1/8	3 1/2 x 3/16	4 x 3/16	4 x 1/4	4 1/2 x 1/4	5 x 1/4	5 1/2 x 1/4	6 x 1/4	6 1/2 x 1/4	7 x 1/4	7 1/2 x 1/4	8 x 1/4
FOOTING	0 x 2-0	0 x 2-3	0 x 2-6	0 x 3-4	0 x 3-9	1-6 x 2-1	1-6 x 2-5	1-6 x 2-9	1-6 x 3-0	1-6 x 3-3	2-0 x 3-0	2-0 x 3-4	2-0 x 3-6	2-0 x 4-0
Sign Identification Number	HEIGHT (FT.)													
1	To 13'	13+	15	15+	19	19+	25							
2	To 11'	11+	14	14+	18	18+	25							
3	To 10'	10+	13	13+	16	16+	25							
4	To 8'	8+	11	11+	18	18+	22	22+	25					
5	To 6'	6+	12	12+	15	15+	19	19+	24	24+	25			
6	To 8'	8+	12	12+	18	18+	22	22+	25					
7	To 7'	7+	13	13+	15	15+	19	19+	25					
8	To 14'	14+	16	16+	20	20+	25							
9	To 11'	11+	14	14+	18	18+	25							
10	To 7'	7+	11	13+	22	22+	25							
11	To 8	8+	12	12+	18	18+	22	22+	25					
12	To 6'	6+	13	13+	14	14+	17	17+	21	21+	25			
13	To 6'	6+	11	81+	13	13+	22	22+	25					
14	To 6'	6+	10	10+	13	13+	21	21+	25					
15	To 9'	9+	13	13+	19	19+	23	23+	25					
16	To 8'	8+	12	12+	18	18+	22	22+	25					
17	To 7'	7+	12	12+	16	16+	20	20+	24	24+	25			
18	To 6'	6+	12	12+	14	14+	17	17+	22	22+	25			
19	To 11'	11+	12	12+	15	15+	19	19+	23	23+	25			
20	To 8'	8+	11	11+	12	12+	15	15+	18	18+	22	22+	25	
21	To 9'	9+	14	14+	18	18+	22	22+	25					
22	To 7'	7+	13	13+	17	17+	21	21+	25					
23	To 9'	9+	14	14+	18	18+	22	22+	25					
24	To 7'	7+	13	13+	17	17+	21	21+	25					
25	To 6'	6+	10	10+	13	13+	20	20+	25					
26	To 8'	8+	12	12+	18	18+	22	22+	25					
27	To 8'	8+	12	12+	18	18+	22	22+	25					
28	To 8'	8+	12	12+	18	18+	22	22+	25					
29	To 8'	8+	11	11+	17	17+	21	21+	25					
30	To 7'	7+	11	11+	17	17+	21	21+	25					
31	To	8'	8+	14	14+	18	18+	22	22+	25				
32	To	8'	8+	13	13+	17	17+	21	21+	25				
33	To	6'	8+	9	9+	15	15+	19	19+	23	23+	25		
34	To	8'	8+	14	14+	17	17+	22	22+	25				
35	To	6'	6+	9	9+	15	15+	19	19+	23	23+	25		
36	To	8'	8+	14	14+	17	17+	22	22+	25				
37	To	11'	11+	12	12+	16	16+	20	20+	24	24+	25		
38	To	10'	10+	12	12+	14	14+	18	18+	22	22+	25		
39	To	9'	9+	12	12+	13	13+	17	17+	21	21+	25		
40	To	8'	8+	11	11+	12	12+	15	15+	18	18+	22	22+	25
41	To	6'	6+	9	9+	12	12+	13	13+	17	17+	20	20+	24	24+	25
42	To	6'	6+	9	9+	11	11+	12	12+	16	16+	20	20+	24	24+	25
43	To	7'	7+	10	10+	11	11+	13	13+	17	17+	21	21+	24	24+	25
44	To 15'	15+	19	19+	23	23+	25							
45	To 11'	11+	4	4+	18	18+	25							
46	To 11'	11+	4	14+	18	18+	25							
47	To 11'	11+	4	14+	18	18+	25							
48	To 10'	10+	13	13+	17	17+	25							
49	To 9'	9+	14	14+	16	16+	25							
50	To 9'	9+	3	3+	16	16+	25							
51	To 9'	9+	14	14+	16	16+	25							
52	To 9'	9+	13	13+	15	15+	24	24+	25					

COL. SIZE	2 x 1/8	2 1/2 x 1/8	3 x 1/8	3 1/2 x 3/16	4 x 3/16	4 x 1/4	4 1/2 x 1/4	5 x 1/4	5 1/2 x 1/4	6 x 1/4	6 1/2 x 1/4	7 x 1/4	7 1/2 x 1/4	8 x 1/4
FOOTING	0 x 2-0	0 x 2-3	0 x 2-6	0 x 3-4	0 x 3-9	1-6 x 2-1	1-6 x 2-5	1-6 x 2-9	1-6 x 3-0	1-6 x 3-3	2-0 x 3-0	2-0 x 3-4	2-0 x 3-6	2-0 x 4-0
Sign Identification Number	HEIGHT (FT.)													
53	To 8'	8+	12	12+	14	14+	23	23+	25					
54	To 7'	7+	11	11+	14	14+	22	22+	25					
55	To 7'	7+	11	11+	13	13+	22	22+	25					
56	To 6'	6+	10	10+	13	13+	20	20+	25					
57	To 6'	6+	10	10+	13	13+	20	20+	25					
58	To 6'	6+	10	10+	13	13+	20	20+	25					
59	To 6'	6+	10	10+	13	13+	20	20+	25					
60	To	9'	9+	13	13+	19	19+	23	23+	25				
61	To	8'	8+	11	11+	17	17+	21	21+	25				
62	To	8'	8+	11	11+	17	17+	21	21+	25				
63	To	8'	8+	12	12+	18	18+	22	22+	25				
64	To	7'	7+	11	11+	16	16+	20	20+	25				
65	To	7'	7+	11	11+	17	17+	21	21+	25				
66	To	6'	6+	10	10+	15	15+	19	19+	23	23+	25		
67	To	6'	6+	10	10+	15	15+	19	19+	24	24+	25		
68	To	6'	6+	10	10+	16	16+	20	20+	24	24+	25		
69	To	6'	6+	9	9+	15	15+	19	19+	23	23+	25		
70	To	8'	8+	14	14+	17	17+	22	22+	25				
71	To	8'	8+	14	14+	18	18+	22	22+	25				
72	To	9'	9+	14	14+	18	18+	21	21+	25				
73	To	8'	8+	13	13+	17	17+	21	21+	25				
74	To	9'	8+	13	13+	16	16+	20	20+	24	24+	25		
75	To	7'	7+	13	13+	15	15+	19	19+	23	23+	25		
76	To	7'	7+	13	13+	15	15+	19	19+	24	24+	25		
77	To	6'	6+	12	12+	15	15+	19	19+	23	23+	25		
78	To	7'	7+	13	13+	15	15+	19	19+	23	23+	25		
79	To	7'	7+	13	13+	15	15+	18	18+	22	22+	25		
80	To	11'	11+	13	13+	15	15+	19	19+	23	23+	25		
81	To	10'	10+	12	12+	14	14+	18	18+	22	22+	25		
82	To	11'	11+	13	13+	15	15+	18	18+	22	22+	25		
83	To	10'	10+	13	13+	14	14+	17	17+	21	21+	25		
84	To	9'	9+	12	12+	13	13+	17	17+	20	20+	24	24+	25
85	To	9'	9+	12	12+	13	13+	16	16+	19	19+	23	23+	25
86	To	8'	8+	11	11+	12	12+	16	16+	19	19+	23	23+	25
87	To	7'	7+	10	10+	12	12+	14	14+	18	18+	21	21+	25
88	To	6'	6+	9	9+	12	12+	13	13+	15	15+	19	19+	22	22+	25
89	To	8'	8+	11	11+	12	12+	14	14+	17	17+	21	21+	25
90	To	7'	7+	13	13+	14	14+	18	18+	22	22+	25		
91	To	9'	9+	12	12+	13	13+	16	16+	19	19+	23	23+	25

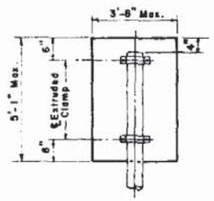

SIGN PANEL DETAILS
TYPE I BRACKET

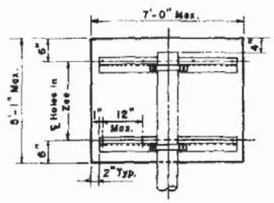

SIGN PANEL DETAILS
TYPE II BRACKET

GENERAL NOTES

1- For Sign Identification Numbers See Sheet Titled "Sign Profile and Identification Numbers". Use the Sign Identification Number and The Required Column Height to Determine The Support Column Size and Footing Size. The Heights Given in the Table are the Maximum Height (From Ground to Bottom of Sign) That A Column Size Can Be Used For A Particular Sign Profile. If the Required Column Height is Not Listed in the Table, The Sign Will Have to be Supported On Multiple Column Type "A" Breakaway Supports.

2- All Columns in the Table Are Aluminum Tube, Given as Outside Diameter Times the Wall Thickness. Size 2 x 1/8 Thru 4 x 3/16 Tube are Frangible Supports and Will Be Driven into The Ground. 4 x 3/16 Tube is The Maximum Size Frangible Support. Size 4 x 1/4 Thru 8 x 1/4 Are Breakaway Supports and Will Have Poured Concrete Footings and Slip Bases.

3- FOOTINGS: Frangible Supports-No Concrete Footing is Required. The Support Column Shall Be Driven Into The Ground To The Depth Indicated. The Portion of The Support Column Which is Driven into The Ground Shall Be Painted With Cutback Asphalt - Grade RC-70.

Breakaway Supports - Footings to be Poured Concrete, Size as Shown in Table. The First Dimension Indicates The Diameter of the Footing and the Second Dimension the Depth of the Footing Into the Ground. In all Cases the Ground is to be Considered as Undisturbed Earth, Road Material or Properly Compacted Fill.

SLIP BASE DETAILS

COLUMN SIZE	SLEEVE I.D.(MAX)	SLEEVE WALL "T"	SLEEVE HEIGHT	WELD "W"	BASE PLATE L x L x T	RADIUS "R"	BASE BOLT SIZE	BASE BOLT TORQUE FT-lbs	BASE BOLT TORQUE INCH-lbs	HOLE SIZE "A"
4 x 1/4	4 1/16	3/8	6"	3/8	8 x 8 x 3/8	11/32	3/8"ø x 3"	53'*	640"*	11/16
4 1/2 x 1/4	4 9/16	3/8	6"	3/8	8 x 8 x 7/8	11/32	3/8"ø x 3 1/2"	53'*	640"*	11/16
5 x 1/4	5 1/16	3/8	7"	3/8	8 x 8 x 7/8	11/32	3/8"ø x 3 1/2"	53'*	640"*	11/16
5 1/2 x 1/4	5 9/16	3/8	7"	11/16	8 1/2 x 8 1/2 x 7/8	13/32	1/2"ø x 3 1/2"	78'*	940"*	13/16
6 x 1/4	6 1/16	3/8	8"	11/16	9 x 9 x 1	13/32	1/2"ø x 3 1/2"	78'*	940"*	13/16
6 1/2 x 1/4	6 9/16	3/8	8"	3/4	9 1/2 x 9 1/2 x 1	13/32	1/2"ø x 3 1/2"	78'*	940"*	13/16
7 x 1/4	7 1/16	3/8	9"	3/4	10 x 10 x 1	13/32	1/2"ø x 3 1/2"	78'*	940"*	13/16
7 1/2 x 1/4	7 9/16	3/8	9"	3/4	10 1/2 x 10 1/2 x 1	15/32	5/8"ø x 3 3/4"	108'*	1290"*	15/16
8 x 1/4	8 1/16	3/8	10"	3/4	11 x 11 x 1	15/32	5/8"ø x 3 3/4"	108'*	1290"*	15/16

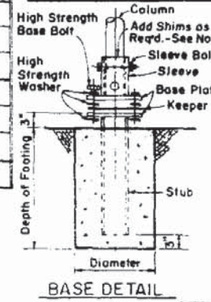

BASE DETAIL

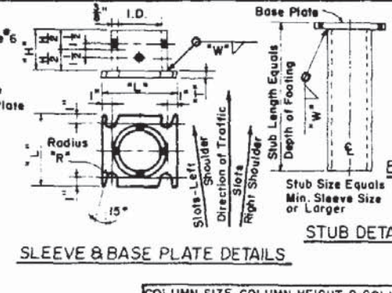

SLEEVE & BASE PLATE DETAILS

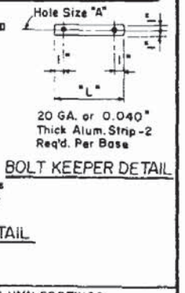

STUB DETAIL

BOLT KEEPER DETAIL

SLIP BASE NOTES

1- Inside Diameter (I.D.) of Sleeve to be no more than 1/16 Larger than Outside Diameter (O.D.) of Column.
2- Sleeve Bolts to be 1/2" ø with Locknuts, Steel A.S.T.M.-A307 Galvanized or Aluminum Assoc. Alloy 2024-T4 or 6061-T6 (ASTM B-211).
3- Base Bolts, Nuts and Washers to be ASTM-A325 High Strength Electroplated Zinc Coating Type I.S Applied in Accordance with A.S.T.M.-A164.
4- An Alternate Cast Base of Aluminum Alloy 356 and T6 Temper in Lieu of the Fabricated Base may be Submitted for Approval by the Engineer. If A Cast Base is Used the Stub will be the Same Size as the Column and will be Bolted to the Casting.
5- Assemble the Slip Base Connection in the Following Manner (a) Connect Column to Sleeve Using Two (2) 1/2" ø Machine Bolts (b) Assemble Top Base Plate to Stub Base Plate Using High Strength Bolts with Three (3) Hardened Washers Per Bolt. One Washer Per Bolt and Two (2) Bolt Keeper Plates Go Between the Base Plates. (c) Use Shim Stock as Required to Plumb the Column (d) Tighten All Bolts The Maximun Possible With a 12" to 15" Wrench to Bed the Washers and Shims and to Clean the Bolt Threads. Loosen Each Bolt in Turn and Retighten to the Prescribed Torque (See Table). Bolts Shall be Tightened with Properly Calibrated Wrenches Under the Supervision of the Project Engineer (e) Burr Threads at Junction with Nut Using a Center Punch to Prevent Nut Loosening.
6- Using Galvanized Steel Shims that are "H" (See Sleeve & Base Plate Details) Minus One Inch (1") Long, Shim a Tight Fit Between the Column Face and the Inside Face of the Sleeve. Place Shims in all Four Quadrants between the 1/2" ø Sleeve Bolts

70 M.P.H. WIND LOADING

REVISIONS			
Date	Descriptions		
6-80	GENERAL REVISION		
-91	Columns Redesigned (Mir Yield Stress) Max. Height Set at 25'-0"		
4-82	Note No. 6 Added		

COLUMN SIZE, COLUMN HEIGHT & COLUMN FOOTINGS

STATE OF FLORIDA DEPARTMENT OF TRANSPORTATION
STRUCTURES

SINGLE COLUMN GROUND SIGNS

ROAD NO.	COUNTY	PROJECT NO.

	Names	Dates
Designed by	C K	3-76
Checked by	C W B	3-76
Quantities by		
Checked by		
Supervised by	A J H	

APPROVED BY

Structures Design Engineer

Drawing No.	Index No.
1 of 1	11862

COL. SIZE	2 x 1/8	2½ x 1/8	3 x 1/8	3½ x 3/16	4 x 3/16	4 x 1/4	4½ x 1/4	5 x 1/4	5½ x 1/4	6 x 1/4	6½ x 1/4	7 x 1/4	7½ x 1/4	8 x 1/4
FOOTING	0 x 2-0	0 x 2-3	0 x 2-6	0 x 3-4	0 x 3-9	1-6 x 2-1	1-6 x 2-5	1-6 x 2-9	1-6 x 3-0	1-6 x 3-3	2-0 x 3-0	2-0 x 3-4	2-0 x 3-6	2-0 x 4-0
Sign Identification Number	HEIGHT (FT.)													
1	To 10'	10+—13	13+—16	16+—25										
2	To 8'	8+—13	13+—15	15+—23	23+—25									
3	To 7'	7+—11	11+—13	13+—21	21+—25									
4			To 9'	9+—14	14+—18	18+—21	21+—25							
5				To 11'	11+—12	12+—15	15+—19	19+—23	23+—25					
6		To 6'	6+—9	9+—14	14+—17	17+—21	21+—25							
7				To 11'	11+—13	13+—15	15+—19	19+—23	23+—25					
8	To 11'	11+—14	14+—17	17+—25										
9	To 9'	9+—13	13+—15	15+—23	23+—25									
10		To 9'	9+—12	12+—18	18+—22	22+—25								
11		To 6'	6+—9	9+—14	14+—17	17+—21	21+—25							
12				To 9'	9+—13	13+—14	14+—17	17+—20	20+—24	24+—25				
13		To 8'	8+—12	12+—18	18+—21	21+—25								
14		To 7'	7+—11	11+—17	17+—20	20+—24	24+—25							
15		To 7'	7+—10	10+—15	15+—19	19+—23	23+—25							
16		To 6'	6+—9	9+—15	15+—18	18+—22	22+—25							
17				To 11'	11+—12	12+—16	16+—19	19+—23	23+—25					
18				To 9'	9+—12	12+—13	13+—17	17+—21	21+—25					
19				To 8'	8+—11	11+—12	12+—15	15+—18	18+—22	22+—25				
20					To 8'	8+—10	10+—12	12+—14	14+—17	17+—21	21+—25			
21			To 6'	6+—12	12+—14	14+—18	18+—22	22+—25						
22				To 12'	12+—13	13+—16	16+—20	20+—24	24+—25					
23			To 6'	6+—12	12+—14	14+—18	18+—22	22+—25						
24				To 12'	12+—13	13+—16	16+—20	20+—24	24+—25					
25		To 7'	7+—11	11+—16	16+—20	20+—24	24+—25							
26		To 6'	6+—9	9+—15	15+—18	18+—22	22+—25							
27		To 6'	6+—9	9+—15	15+—18	18+—22	22+—25							
28		To 6'	6+—9	9+—14	14+—17	17+—21	21+—25							
29			To 8'	8+—14	14+—17	17+—21	21+—25							
30			To 8'	8+—13	13+—17	17+—20	20+—24	24+—25						
31			To 6'	6+—13	13+—14	14+—17	17+—21	21+—25						
32			To 6'	6+—12	12+—13	13+—17	17+—20	20+—24	24+—25					
33			To 7'	7+—12	12+—15	15+—19	19+—22	22+—25						
34			To 6'	6+—12	12+—14	14+—17	17+—21	21+—25						
35			To 7'	7+—12	12+—15	15+—19	19+—22	22+—25						
36			To 6'	6+—12	12+—14	14+—17	17+—21	21+—25						
37				To 8'	8+—11	11+—12	12+—15	15+—19	19+—23	23+—25				
38				To 7'	7+—10	10+—13	13+—16	16+—20	20+—24	24+—25				
39				To 7'	7+—10	10+—12	12+—13	13+—17	17+—20	20+—24	24+—25			
40					To 8'	8+—10	10+—12	12+—14	14+—17	17+—21	21+—25			
41					To 7'	7+—9	9+—12	12+—13	13+—16	16+—19	19+—23	23+—25		
42					To 6'	6+—8	8+—11	11+—12	12+—15	15+—18	18+—22	22+—25		
43						To 7'	7+—9	9+—11	11+—13	13+—16	16+—19	19+—22	22+—25	
44	To 13'	13+—16	16+—19	19+—25										
45	To 9'	9+—13	13+—15	15+—22	22+—25									
46	To 9'	9+—13	13+—15	15+—22	22+—25									
47	To 9'	9+—13	13+—15	15+—23	23+—25									
48	To 8'	8+—12	12+—14	14+—22	22+—25									
49	To 7'	7+—11	11+—14	14+—21	21+—25									
50	To 7'	7+—11	11+—13	13+—21	21+—25									
51	To 7'	7+—11	11+—14	14+—20	20+—25									
52	To 6'	6+—10	10+—13	13+—20	20+—25									
53	To 6'	6+—10	10+—13	13+—19	19+—22	22+—25								
54		To 9'	9+—12	12+—18	18+—21	21+—25								
55		To 9'	9+—12	12+—18	18+—22	22+—25								
56		To 7'	7+—11	11+—16	16+—20	20+—24	24+—25							
57		To 7'	7+—10	10+—16	16+—19	19+—23	23+—25							
58		To 7'	7+—11	11+—16	16+—20	20+—24	24+—25							
59		To 7'	7+—10	10+—16	16+—20	20+—23	23+—25							
60		To 7'	7+—10	10+—15	15+—19	19+—23	23+—25							
61		To 6'	6+—8	8+—13	13+—17	17+—21	21+—24	24+—25						
62		To 6'	6+—8	8+—13	13+—17	17+—21	21+—24	24+—25						
63		To 6'	6+—9	9+—14	14+—17	17+—21	21+—25							
64			To 8'	8+—14	14+—16	16+—20	20+—24	24+—25						
65			To 8'	8+—13	13+—16	16+—20	20+—24	24+—25						
66			To 7'	7+—13	13+—15	15+—19	19+—23	23+—25						
67			To 7'	7+—13	13+—15	15+—19	19+—23	23+—25						
68			To 7'	7+—12	12+—16	16+—19	19+—23	23+—25						
69			To 7'	7+—13	13+—15	15+—18	18+—22	22+—25						
70			To 6'	6+—12	12+—14	14+—17	17+—21	21+—25						
71			To 6'	6+—13	13+—14	14+—17	17+—21	21+—25						
72			To 6'	6+—13	13+—14	14+—17	17+—21	21+—25						
73			To 6'	6+—12	12+—13	13+—17	17+—20	20+—24	24+—25					
74				To 12'	12+—13	13+—16	16+—19	19+—23	23+—25					
75				To 11'	11+—13	13+—15	15+—18	18+—22	22+—25					
76				To 11'	11+—13	13+—15	15+—19	19+—23	23+—25					
77				To 10'	10+—12	12+—14	14+—18	18+—22	22+—25					
78				To 11'	11+—13	13+—15	15+—18	18+—22	22+—25					
79				To 10'	10+—13	13+—14	14+—18	18+—22	22+—25					
80				To 8'	8+—11	11+—13	13+—15	15+—18	18+—22	22+—25				
81				To 7'	7+—10	10+—12	12+—14	14+—17	17+—21	21+—25				
82				To 8'	8+—11	11+—13	13+—14	14+—18	18+—21	21+—25				
83				To 7'	7+—10	10+—13	13+—14	14+—17	17+—20	20+—24	24+—25			
84				To 6'	6+—9	9+—12	12+—13	13+—16	16+—19	19+—23	23+—25			
85				To 6'	6+—9	9+—11	11+—13	13+—15	15+—19	19+—22	22+—25			
86				To 6'	6+—8	8+—11	11+—12	12+—15	15+—18	18+—22	22+—25			
87					To 7'	7+—10	10+—12	12+—13	13+—17	17+—20	20+—24	24+—25		
88						To 6'	6+—9	9+—12	12+—13	13+—14	14+—17	17+—20	20+—23	23+—25
89							To 7'	7+—10	10+—11	11+—13	13+—16	16+—19	19+—22	22+—25
90				To 10'	10+—13	13+—14	14+—17	17+—21	21+—25					
91				To 6'	6+—9	9+—11	11+—13	13+—15	15+—18	18+—22	22+—25			

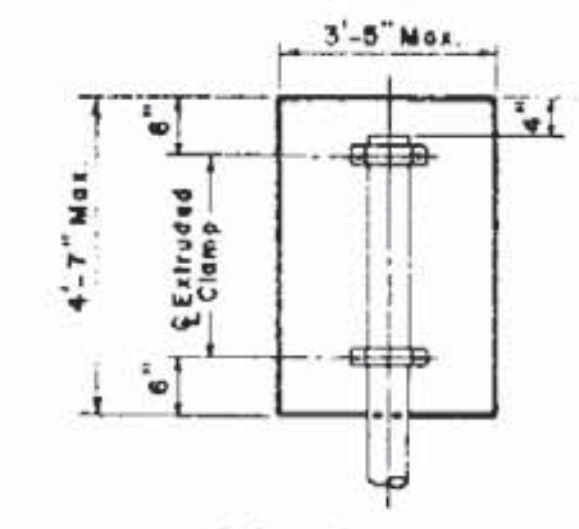

SIGN PANEL DETAILS
TYPE I BRACKET

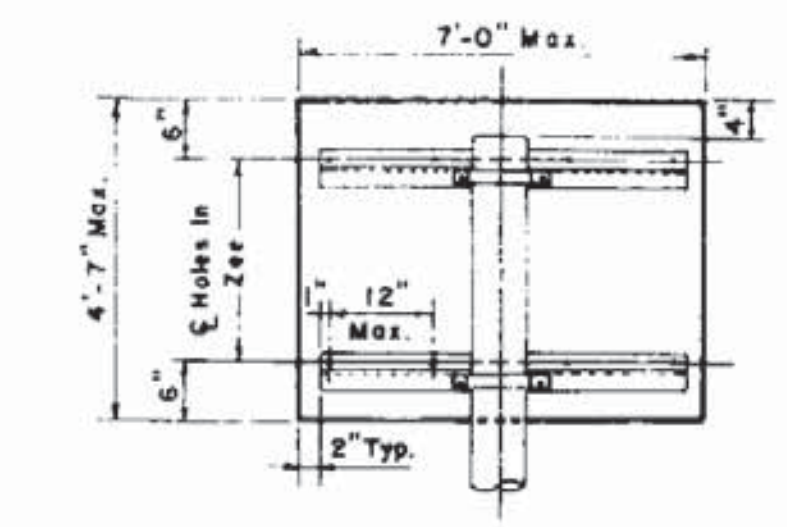

SIGN PANEL DETAILS
TYPE II BRACKET

GENERAL NOTES

1- For Sign Identification Numbers See Sheet Titled "Sign Profile and Identification Numbers". Use the Sign Identification Number and The Required Column Height to Determine The Support Column Size and Footing Size. The Heights Given in the Table are the Maximum Height (From Ground to Bottom of Sign) That A Column Size Can Be Used For A Particular Sign Profile. If the Required Column Height is Not Listed in the Table, The Sign Will Have to be Supported On Multiple Column Type "A" Breakaway Supports.

2- All Columns in the Table Are Aluminum Tube, Given as Outside Diameter Times the Wall Thickness. Size 2 x 1/8 Thru 4 x 3/16 Tube are Frangible Supports and Will Be Driven into The Ground. 4 x 3/16 Tube is The Maximum Size Frangible Support. Size 4 x 1/4 Thru 8 x 1/4 Are Breakaway Supports and Will Have Poured Concrete Footings and Slip Bases.

3- FOOTINGS - Frangible Supports - No Concrete Footing is Required. The Support Column Shall Be Driven Into The Ground To The Depth Indicated. The Portion of The Support Column Which is Driven Into The Ground Shall Be Painted With Cutback Asphalt - Grade RC-70.

Breakaway Supports - Footings to be Poured Concrete, Size as Shown in Table. The First Dimension Indicates The Diameter of the Footing and the Second Dimension the Depth of the Footing Into the Ground. In all Cases the Ground is to be Considered as Undisturbed Earth, Road Material or Properly Compacted Fill.

SLIP BASE DETAILS

COLUMN SIZE	SLEEVE I.D. (MAX)	SLEEVE WALL "T"	SLEEVE HEIGHT	WELD "W"	BASE PLATE L x L x T	RADIUS "R"	BASE BOLT SIZE	BASE BOLT TORQUE FT-lbs	BASE BOLT TORQUE INCH-lbs	HOLE SIZE "A"
4 x 1/4	4 1/16	3/8	6"	5/8	8 x 8 x 3/4	11/32	5/8" ø x 3"	53' *	640" *	11/16
4½ x 1/4	4 9/16	3/8	6"	5/8	8 x 8 x 7/8	11/32	5/8" ø x 3¼"	53' *	640" *	11/16
5 x 1/4	5 1/16	3/8	7"	5/8	8 x 8 x 7/8	11/32	5/8" ø x 3¼"	53' *	640" *	11/16
5½ x 1/4	5 9/16	3/8	7"	11/16	8½ x 8½ x 7/8	13/32	3/4" ø x 3¼"	78' *	940" *	13/16
6 x 1/4	6 1/16	3/8	8"	11/16	9 x 9 x 1	13/32	3/4" ø x 3½"	78' *	940" *	13/16
6½ x 1/4	6 9/16	3/8	8"	3/4	9½ x 9½ x 1	13/32	3/4" ø x 3½"	78' *	940" *	13/16
7 x 1/4	7 1/16	3/8	9"	3/4	10 x 10 x 1	13/32	3/4" ø x 3½"	78' *	940" *	13/16
7½ x 1/4	7 9/16	3/8	9"	3/4	10½ x 10½ x 1	15/32	7/8" ø x 3¾"	108' *	1290" *	15/16
8 x 1/4	8 1/16	3/8	10"	3/4	11 x 11 x 1	15/32	7/8" ø x 3¾"	108' *	1290" *	15/16

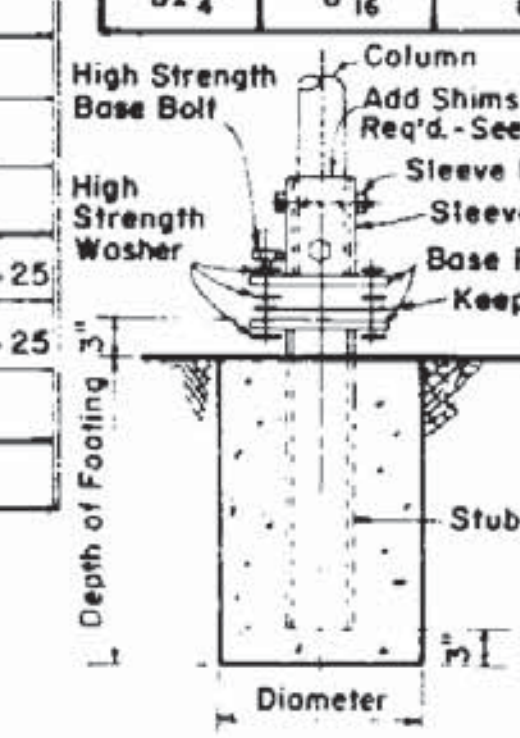

BASE DETAIL

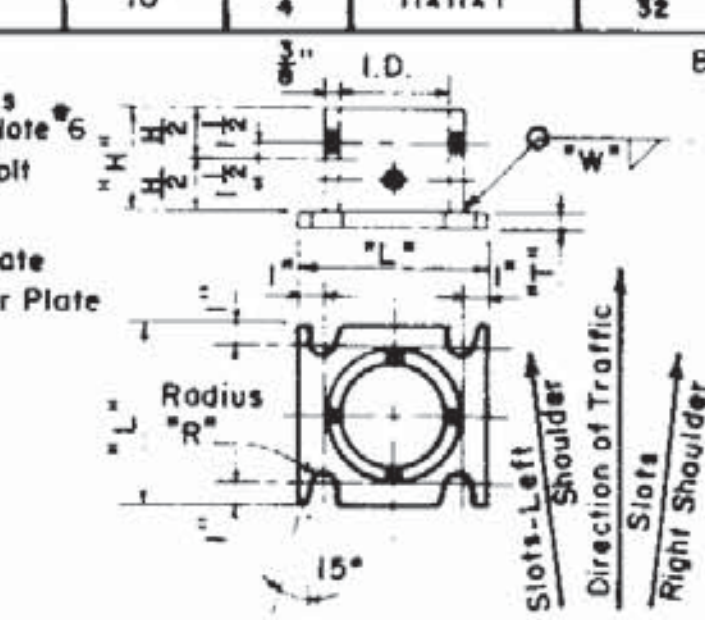

SLEEVE & BASE PLATE DETAILS

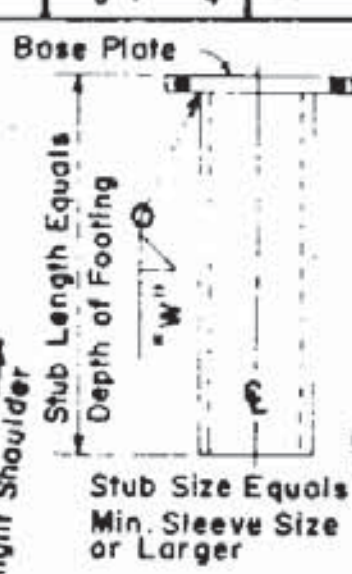

STUB DETAIL

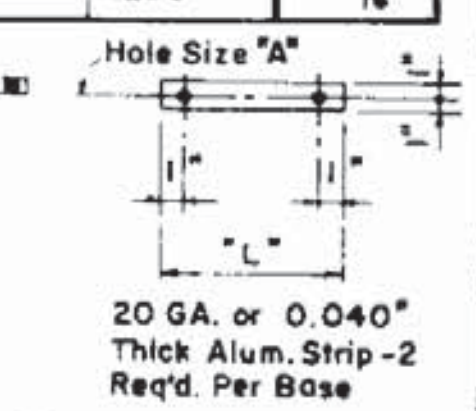

BOLT KEEPER DETAIL

SLIP BASE NOTES

1- Inside Diameter (I.D.) of Sleeve to be no more than 1/16 Larger than Outside Diameter (O.D.) of Column.
2- Sleeve Bolts to be ½" ø with Locknuts, Steel A.S.T.M.-A307 Galvanized or Aluminum Assoc. Alloy 2024-T4 or 6061-T6 (ASTM B-211).
3- Base Bolts, Nuts and Washers to be ASTM-A325 High Strength Electroplated Zinc Coating Type L.S. Applied in Accordance with ASTM-A164.
4- An Alternate Cast Base of Aluminum Alloy 356 and T6 Temper in Lieu of the Fabricated Base may be Submitted for Approval by the Engineer. If A Cast Base is Used the Stub will be the Same Size as the Column and will be Bolted to the Casting.
5- Assemble the Slip Base Connection in the Following Manner (a) Connect Column to Sleeve Using Two (2) ½" ø Machine Bolts (b) Assemble Top Base Plate to Stub Base Plate Using High Strength Bolts with Three (3) Hardened Washers Per Bolt. One Washer Per Bolt and Two (2) Bolt Keeper Plates Go Between the Base Plates (c) Use Shim Stock as Required to Plumb the Column (d) Tighten All Bolts The Maximum Possible With a 12" to 15" Wrench to Bed the Washers and Shims and to Clean the Bolt Threads. Loosen Each Bolt in Turn and Retighten to the Prescribed Torque (See Table). Bolts Shall be Tightened with Properly Calibrated Wrenches Under the Supervision of the Project Engineer (e) Burr Threads at Junction with Nut Using a Center Punch to Prevent Nut Loosening.
6- Using Galvanized Steel Shims that are "H" (See Sleeve & Base Plate Details) Minus One Inch (1") Long, Shim a Tight Fit Between the Column Face and the Inside Face of the Sleeve. Place Shims in all Four Quadrants between the ½" ø Sleeve Bolts.

80 M.P.H. WIND LOADING

COLUMN SIZE, COLUMN HEIGHT & COLUMN FOOTINGS

STATE OF FLORIDA DEPARTMENT OF TRANSPORTATION
STRUCTURES

SINGLE COLUMN GROUND SIGNS

REVISIONS

Dates	Descriptions
	GENERAL REVISION
	Columns Redesigned (Min. Yield Stress) Max. Height Set at 25'-0"
	Note No. 6 Added

ROAD NO. | COUNTY | PROJECT NO.

	Names	Dates
Designed by	CK	3-76
Checked by	CWB	3-76
Quantities by		
Checked by		
Supervised by	AJH	

APPROVED BY
Deputy Design Engineer, Structures

Drawing No. 1 of 1
Index No. 11863

COLUMN SIZE, COLUMN HEIGHT & COLUMN FOOTINGS

COL. SIZE	2 x 1/8	2½ x 1/8	3 x 1/8	3½ x 3/16	4 x 3/16	4 x 1/4	4½ x 1/4	5 x 1/4	5½ x 1/4	6 x 1/4	6½ x 1/4	7 x 1/4	7½ x 1/4	8 x 1/4
FOOTING	0 x 2-0	0 x 2-3	0 x 2-6	0 x 3-4	0 x 3-9	1-6 x 2-1	1-6 x 2-5	1-6 x 2-9	1-6 x 3-0	1-6 x 3-3	2-0 x 3-0	2-0 x 3-4	2-0 x 3-6	2-0 x 4-0
Sign Identification Number	HEIGHT (FT.)													
1	To 8'	8+ – 12	12+ – 14	14+ – 21	21+ – 25									
2	To 7'	7+ – 10	10+ – 13	13+ – 19	19+ – 22	22+ – 25								
3		To 9'	9+ – 12	12+ – 18	18+ – 21	21+ – 25								
4			To 6'	6+ – 12	12+ – 14	14+ – 18	18+ – 21	21+ – 25						
5				To 8'	8+ – 11	11+ – 12	12+ – 15	15+ – 19	19+ – 23	23+ – 25				
6			To 7'	7+ – 13	13+ – 14	14+ – 18	18+ – 21	21+ – 25						
7				To 8'	8+ – 11	11+ – 13	13+ – 15	15+ – 19	19+ – 23	23+ – 25				
8	To 9'	9+ – 13	13+ – 15	15+ – 21	21+ – 25									
9	To 7'	7+ – 11	11+ – 14	14+ – 19	19+ – 23	23+ – 25								
10		To 7'	7+ – 10	10+ – 15	15+ – 18	18+ – 22	22+ – 25							
11			To 7'	7+ – 13	13+ – 14	14+ – 18	18+ – 21	21+ – 25						
12				To 7'	7+ – 10	10+ – 13	13+ – 14	14+ – 17	17+ – 20	20+ – 24	24+ – 25			
13		To 6'	6+ – 9	9+ – 14	14+ – 18	18+ – 21	21+ – 25							
14		To 6'	6+ – 9	9+ – 14	14+ – 17	17+ – 20	20+ – 24	24+ – 25						
15			To 8'	8+ – 13	13+ – 16	16+ – 19	19+ – 23	23+ – 25						
16			To 7'	7+ – 13	13+ – 15	15+ – 18	18+ – 22	22+ – 25						
17				To 9'	9+ – 12	12+ – 13	13+ – 16	16+ – 20	20+ – 24	24+ – 25				
18				To 7'	7+ – 10	10+ – 12	12+ – 14	14+ – 17	17+ – 21	21+ – 25				
19				To 6'	6+ – 8	8+ – 11	11+ – 12	12+ – 15	15+ – 18	18+ – 22	22+ – 25			
20					To 6'	6+ – 8	8+ – 11	11+ – 12	12+ – 14	14+ – 17	17+ – 20	20+ – 24	24+ – 25	
21				To 10'	10+ – 12	12+ – 14	14+ – 18	18+ – 22	22+ – 25					
22				To 9'	9+ – 12	12+ – 13	13+ – 17	17+ – 20	20+ – 24	24+ – 25				
23				To 10'	10+ – 12	12+ – 14	14+ – 18	18+ – 22	22+ – 25					
24				To 9'	9+ – 12	12+ – 13	13+ – 17	17+ – 20	20+ – 24	24+ – 25				
25		To 6'	6+ – 8	8+ – 13	13+ – 17	17+ – 20	20+ – 24	24+ – 25						
26			To 7'	7+ – 13	13+ – 15	15+ – 18	18+ – 22	22+ – 25						
27			To 7'	7+ – 13	13+ – 15	15+ – 18	18+ – 22	22+ – 25						
28			To 7'	7+ – 13	13+ – 14	14+ – 18	18+ – 21	21+ – 25						
29			To 6'	6+ – 13	13+ – 14	14+ – 17	17+ – 21	21+ – 25						
30			To 6'	6+ – 12	12+ – 13	13+ – 17	17+ – 20	20+ – 24	24+ – 25					
31				To 10'	10+ – 13	13+ – 14	14+ – 18	18+ – 21	21+ – 25					
32				To 9'	9+ – 12	12+ – 13	13+ – 17	17+ – 21	21+ – 25					
33				To 11'	11+ – 12	12+ – 15	15+ – 19	19+ – 23	23+ – 25					
34				To 10'	10+ – 12	12+ – 14	14+ – 17	17+ – 21	21+ – 25					
35				To 11'	11+ – 12	12+ – 15	15+ – 19	19+ – 23	23+ – 25					
36				To 10'	10+ – 12	12+ – 14	14+ – 17	17+ – 21	21+ – 25					
37				To 6'	6+ – 9	9+ – 11	11+ – 12	12+ – 15	15+ – 19	19+ – 23	23+ – 25			
38					To 8'	8+ – 12	12+ – 13	13+ – 16	16+ – 20	20+ – 24	24+ – 25			
39					To 7'	7+ – 10	10+ – 12	12+ – 13	13+ – 16	16+ – 20	20+ – 23	23+ – 25		
40					To 6'	6+ – 8	8+ – 11	11+ – 12	12+ – 14	14+ – 17	17+ – 20	20+ – 24	24+ – 25	
41						To 7'	7+ – 9	9+ – 12	12+ – 13	13+ – 15	15+ – 18	18+ – 22	22+ – 25	
42						To 6'	6+ – 9	9+ – 11	11+ – 12	12+ – 14	14+ – 17	17+ – 21	21+ – 24	24+ – 25
43							To 7'	7+ – 9	9+ – 11	11+ – 12	12+ – 15	15+ – 18	18+ – 21	21+ – 24
44	To 11'	11+ – 14	14+ – 17	17+ – 24	24+ – 25									
45	To 7'	7+ – 10	10+ – 14	14+ – 19	19+ – 22	22+ – 25								
46	To 7'	7+ – 10	10+ – 14	14+ – 19	19+ – 22	22+ – 25								
47	To 7'	7+ – 11	11+ – 14	14+ – 19	19+ – 23	23+ – 25								
48	To 6'	6+ – 10	10+ – 13	13+ – 19	19+ – 22	22+ – 25								
49	To 6'	6+ – 9	9+ – 12	12+ – 17	17+ – 21	21+ – 24	24+ – 25							
50		To 9'	9+ – 12	12+ – 18	18+ – 21	21+ – 24	24+ – 25							
51		To 9'	9+ – 12	12+ – 17	17+ – 20	20+ – 24	24+ – 25							
52		To 8'	8+ – 11	11+ – 17	17+ – 20	20+ – 24	24+ – 25							
53		To 8'	8+ – 11	11+ – 16	16+ – 19	19+ – 22	22+ – 25							
54		To 7'	7+ – 10	10+ – 15	15+ – 18	18+ – 21	21+ – 25							
55		To 7'	7+ – 10	10+ – 15	15+ – 18	18+ – 22	22+ – 25							
56		To 6'	6+ – 8	8+ – 13	13+ – 17	17+ – 20	20+ – 24	24+ – 25						
57		To 6'	6+ – 8	8+ – 14	14+ – 16	16+ – 20	20+ – 23	23+ – 25						
58		To 6'	6+ – 8	8+ – 13	13+ – 17	17+ – 20	20+ – 24	24+ – 25						
59			To 8'	8+ – 13	13+ – 16	16+ – 20	20+ – 23	23+ – 25						
60			To 8'	8+ – 13	13+ – 16	16+ – 19	19+ – 23	23+ – 25						
61			To 7'	7+ – 13	13+ – 14	14+ – 17	17+ – 21	21+ – 25						
62			To 7'	7+ – 13	13+ – 14	14+ – 17	17+ – 21	21+ – 25						
63			To 7'	7+ – 13	13+ – 14	14+ – 18	18+ – 21	21+ – 25						
64			To 6'	6+ – 12	12+ – 14	14+ – 16	16+ – 20	20+ – 24	24+ – 25					
65			To 6'	6+ – 12	12+ – 13	13+ – 17	17+ – 20	20+ – 24	24+ – 25					
66				To 11'	11+ – 13	13+ – 15	15+ – 19	19+ – 23	23+ – 25					
67				To 11'	11+ – 13	13+ – 16	16+ – 19	19+ – 23	23+ – 25					
68				To 12'	12+ – 13	13+ – 16	16+ – 19	19+ – 24	24+ – 25					
69				To 11'	11+ – 13	13+ – 15	15+ – 18	18+ – 22	22+ – 25					
70				To 10'	10+ – 12	12+ – 14	14+ – 17	17+ – 21	21+ – 25					
71				To 10'	10+ – 13	13+ – 14	14+ – 18	18+ – 21	21+ – 25					
72				To 10'	10+ – 13	13+ – 14	14+ – 17	17+ – 21	21+ – 25					
73				To 9'	9+ – 12	12+ – 13	13+ – 17	17+ – 21	21+ – 25					
74				To 9'	9+ – 12	12+ – 13	13+ – 16	16+ – 19	19+ – 23	23+ – 25				
75				To 8'	8+ – 11	11+ – 13	13+ – 15	15+ – 18	18+ – 22	22+ – 25				
76				To 8'	8+ – 11	11+ – 13	13+ – 15	15+ – 19	19+ – 23	23+ – 25				
77				To 8'	8+ – 11	11+ – 12	12+ – 15	15+ – 18	18+ – 22	22+ – 25				
78				To 8'	8+ – 11	11+ – 13	13+ – 15	15+ – 18	18+ – 22	22+ – 25				
79				To 8'	8+ – 11	11+ – 13	13+ – 15	15+ – 18	18+ – 22	22+ – 25				
80				To 6'	6+ – 8	8+ – 11	11+ – 13	13+ – 15	15+ – 18	18+ – 22	22+ – 25			
81					To 8'	8+ – 10	10+ – 12	12+ – 14	14+ – 17	17+ – 21	21+ – 25			
82				To 6'	6+ – 8	8+ – 11	11+ – 13	13+ – 14	14+ – 18	18+ – 21	21 – 25			
83					To 8'	8+ – 10	10+ – 13	13+ – 14	14+ – 17	17+ – 20	20+ – 23	23+ – 25		
84					To 7'	7+ – 9	9+ – 12	12+ – 13	13+ – 16	16+ – 19	19+ – 22	22+ – 25		
85					To 7'	7+ – 9	9+ – 12	12+ – 13	13+ – 15	15+ – 18	18+ – 21	21+ – 25		
86					To 6'	6+ – 8	8+ – 11	11+ – 12	12+ – 15	15+ – 18	18+ – 21	21+ – 25		
87						To 7'	7+ – 10	10+ – 12	12+ – 13	13+ – 16	16+ – 19	19+ – 23	23+ – 25	
88							To 6'	6+ – 9	9+ – 11	11+ – 12	12+ – 13	13+ – 16	16+ – 19	19+ – 22
89								To 7'	7+ – 10	10+ – 11	11+ – 12	12+ – 15	15+ – 17	17+ – 20
90				To 8'	8+ – 11	[illegible] – 13	13+ – 14	14+ – 18	18+ – 21	21+ – 25				
91					To 7'	7+ – 9	9+ – 12	12+ – 13	13+ – 15	15+ – 18	18+ – 21	21+ – 24	24+ – 25	

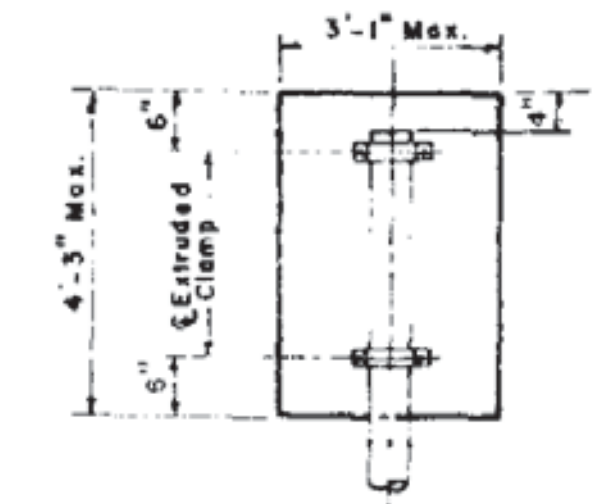

SIGN PANEL DETAILS
TYPE I BRACKET

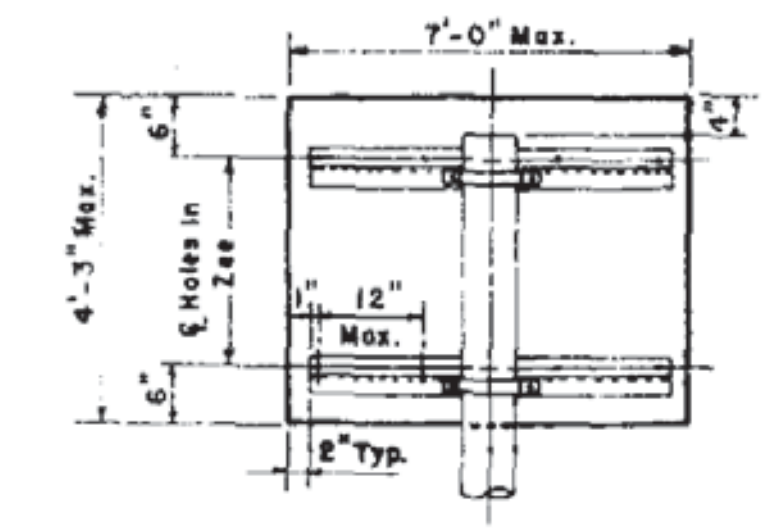

SIGN PANEL DETAILS
TYPE II BRACKET

GENERAL NOTES

1- For Sign Identification Numbers See Sheet Titled "Sign Profile and Identification Numbers". Use the Sign Identification Number and The Required Column Height to Determine The Support Column Size and Footing Size. The Heights Given in the Table are the Maximum Height (From Ground to Bottom of Sign) That A Column Size Can Be Used For A Particular Sign Profile. If the Required Column Height is Not Listed in the Table, The Sign Will Have to be Supported On Multiple Column Type "A" Breakaway Supports.

2- *All Columns in the Table Are Aluminum Tube, Given as Outside Diameter Times the Wall Thickness. Size 2 x 1/8 Thru 4 x 3/16* Tube are Frangible Supports and Will Be Driven into The Ground. 4 x 3/16 Tube is The Maximum Size Frangible Support. Size 4 x 1/4 Thru 8 x 1/4 *Are Breakaway Supports and Will Have Poured Concrete Footings and Slip Bases.*

3- FOOTINGS: Frangible Supports - No Concrete Footing is Required. The Support Column Shall Be Driven Into The Ground To The Depth Indicated. The Portion of The Support Column Which Is Driven into The Ground Shall Be Painted With Cutback Asphalt - Grade RC-70.

Breakaway Supports - Footings to be Poured Concrete, Size as Shown in Table. The First Dimension Indicates The Diameter of the Footing and the Second Dimension the Depth of the Footing Into the Ground. In all Cases the Ground is *to be Considered as Undisturbed Earth, Road Material or Properly Compacted Fill.*

SLIP BASE DETAILS

COLUMN SIZE	SLEEVE I.D. (MAX)	SLEEVE WALL "T"	SLEEVE HEIGHT	WELD "W"	BASE PLATE L x L x T	RADIUS "R"	BASE BOLT SIZE	BASE BOLT TORQUE FT-lbs	BASE BOLT TORQUE INCH-lbs	HOLE SIZE "A"
4 x 1/4	4 1/16	3/8	6"	5/8	8 x 8 x 3/4	11/32	5/8" φ x 3"	53' #	640" #	11/16
4½ x 1/4	4 9/16	3/8	6"	5/8	8 x 8 x 7/8	11/32	5/8" φ x 3¼"	53' #	640" #	11/16
5 x 1/4	5 1/16	3/8	7"	5/8	8 x 8 x 7/8	11/32	5/8" φ x 3¼"	53' #	640" #	11/16
5½ x 1/4	5 9/16	3/8	7"	11/16	8½ x 8½ x 7/8	13/32	3/4" φ x 3½"	78' #	940" #	13/16
6 x 1/4	6 1/16	3/8	8"	11/16	9 x 9 x 1	13/32	3/4" φ x 3½"	78' #	940" #	13/16
6½ x 1/4	6 9/16	3/8	8"	3/4	9½ x 9½ x 1	13/32	3/4" φ x 3½"	78' #	940" #	13/16
7 x 1/4	7 1/16	3/8	9"	3/4	10 x 10 x 1	13/32	3/4" φ x 3½"	78' #	940" #	13/16
7½ x 1/4	7 9/16	3/8	9"	3/4	10½ x 10½ x 1	15/32	7/8" φ x 3¾"	108' #	1290" #	15/16
8 x 1/4	8 1/16	3/8	10"	3/4	11 x 11 x 1	15/32	7/8" φ x 3¾"	108' #	1290" #	15/16

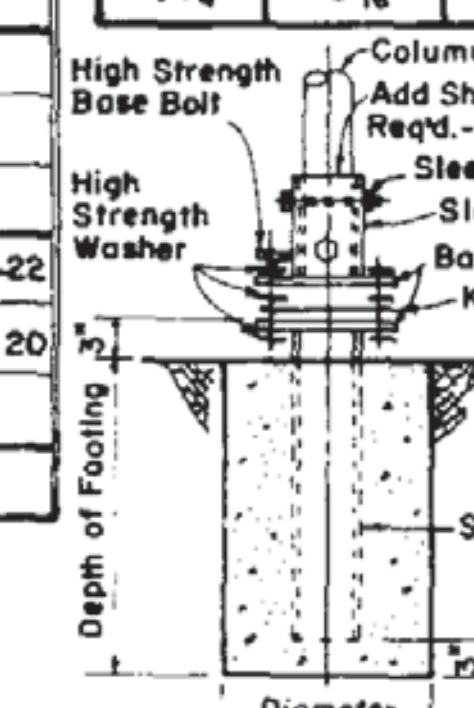

BASE DETAIL

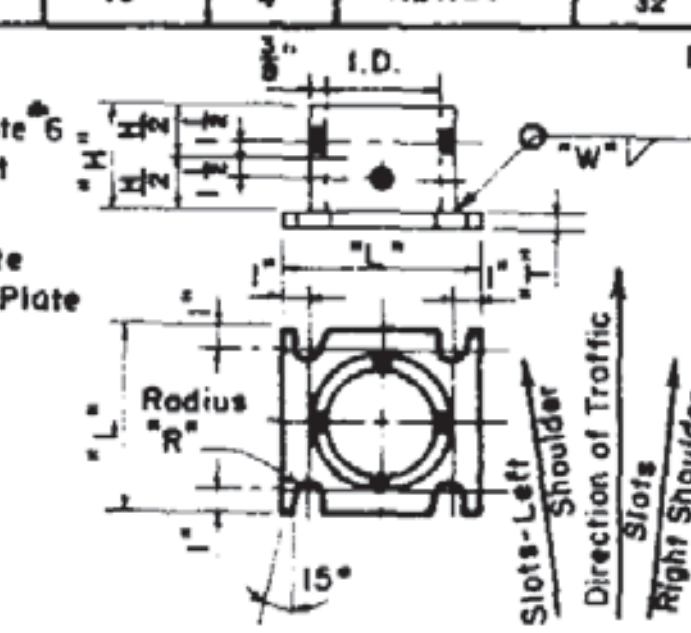

SLEEVE & BASE PLATE DETAILS

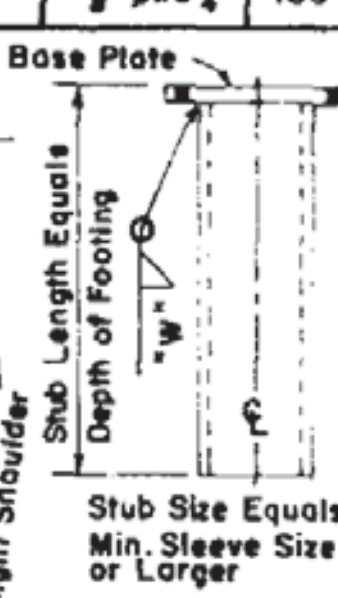

STUB DETAIL

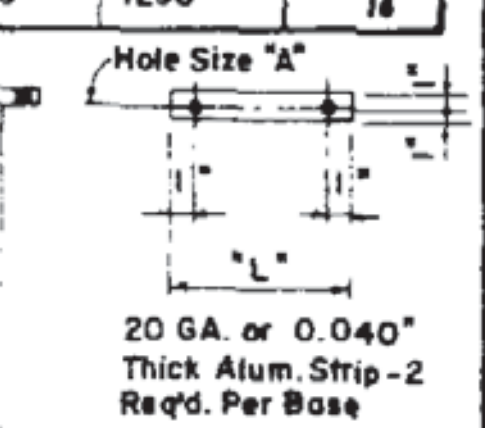

BOLT KEEPER DETAIL

SLIP BASE NOTES

1- Inside Diameter (I.D.) of Sleeve to be no more than 1/16 Larger than Outside Diameter (O.D.) of Column.
2- Sleeve Bolts to be 1/2" φ with Locknuts, Steel A.S.T.M.-A307 Galvanized or Aluminum Assoc. Alloy 2024-T4 or 6061-T6 (ASTM B-211).
3- Base Bolts, Nuts and Washers to be ASTM-A325 High Strength Electroplated Zinc Coating Type LS Applied in Accordance with ASTM-A164.
4- An Alternate Cast Base of Aluminum Alloy 356 and T6 Temper in Lieu of the Fabricated Base may be Submitted for Approval by the Engineer. (If A Cast Base is Used the Stub will be the Same Size as the Column and will be Bolted to the Casting.
5- Assemble the Slip Base Connection in the Following Manner (a) Connect Column to Sleeve Using Two (2) 1/2" φ Machine Bolts (b) Assemble Top Base Plate to Stub Base Plate Using High Strength Bolts with Three (3) Hardened Washers Per Bolt. One Washer Per Bolt and Two (2) Bolt Keeper Plates Go Between the Base Plates. (c) Use Shim Stock as Required to Plumb the Column (d) Tighten All Bolts The Maximun Possible With a 12" to 15" Wrench to Bed the Washers and Shims and to Clean the Bolt Threads. Loosen Each Bolt in Turn and Retighten to the Prescribed Torque (See Table). Bolts Shall be Tightened with Properly Calibrated Wrenches Under the Supervision of the Project Engineer (e) Burr Threads at Junction with Nut Using a Center Punch to Prevent Nut Loosening.
6- Using Galvanized Steel Shims that are "H" (See Sleeve & Base Plate Details) Minus One Inch (1") Long, Shim a Tight Fit Between the Column Face and the Inside Face of the Sleeve. Place Shims in all Four Quadrants between the 1/2" φ Sleeve Bolts.

90 M.P.H. WIND LOADING

REVISIONS	
Dates	Descriptions
6-80	GENERAL REVISION
[illegible]	Columns Redesigned [illegible] Stress). Max. Height Set at 25-0
4-82	Note No. 6 Added

COLUMN SIZE, COLUMN HEIGHT & COLUMN FOOTINGS

STATE OF FLORIDA DEPARTMENT OF TRANSPORTATION
STRUCTURES

SINGLE COLUMN GROUND SIGNS

ROAD NO.	COUNTY	PROJECT NO.

	Names	Dates
Designed by	CK	3-76
Checked by	CWB	3-76
Quantities by		
Checked by		
Supervised by	AJH	

APPROVED BY: Deputy Design Engineer Structures

Drawing No. 1 of 1 — Index No. 11864

COLUMN SIZE (O.D. x WALL)	PLATE SIZE A	PLATE THICKNESS B	FINS		FILLET WELD SIZE	SLEEVE HEIGHT DIMENSION D	ANCHOR BOLT LOCATION		ANCHOR BOLT HOLE DIAMETER	ANCHOR BOLT DIAMETER & LENGTH	DIMENSION M (NOMINAL)	SLEEVE BOLT DIAMETER
			THICKNESS T	DIMENSION C			DIMENSION E	DIMENSION F				
12"ø x ¾"	2'-0"	1⅜"	1¼"	9"	⅞"	1'-0"	3"	3½"	2 9/16"	2¼"ø x 6'-6"	9¾"	⅞"
12"ø x ½"	1'-11"	1¼"	1⅛"	8"	⅞"	1'-0"	3"	3½"	2 5/16"	2"ø x 5'-10"	9"	¾"
12"ø x ⅜"	1'-10"	1⅛"	1"	7½"	⅞"	1'-0"	3"	3½"	2 5/16"	2"ø x 5'-10"	9"	¾"
12"ø x ½"	1'-9"	1"	1"	7½"	⅞"	1'-0"	2"	3½"	2 1/16"	1¾"ø x 5'-1"	7¾"	¾"
11"ø x ½"	1'-10"	1⅛"	1"	8"	⅞"	1'-0"	2"	3½"	2 5/16"	2"ø x 5'-10"	9"	¾"
11"ø x ⅜"	1'-8"	1"	1"	7"	⅞"	1'-0"	2"	3¼"	2 1/16"	1¾"ø x 5'-1"	7¾"	¾"
11"ø x ¼"	1'-7"	1"	⅞"	6½"	⅝"	1'-0"	2"	3¼"	1 13/16"	1½"ø x 4'-4"	6½"	¾"
10½"ø x ½"	1'-9"	1"	1"	7½"	⅞"	1'-0"	2"	3¼"	2 1/16"	1¾"ø x 5'-1"	7¾"	¾"
10½"ø x ⅜"	1'-7"	1"	⅞"	6½"	⅞"	1'-0"	2"	3¼"	2 1/16"	1¾"ø x 5'-1"	7¾"	¾"
10½"ø x ¼"	1'-6"	⅞"	¾"	6"	⅝"	11"	2"	3"	1 13/16"	1½"ø x 4'-4"	6½"	¾"
10"ø x ½"	1'-8"	1"	1"	7"	⅞"	11"	2"	3"	2 1/16"	1¾"ø x 5'-1"	7¾"	¾"
10"ø x ⅜"	1'-7"	1"	⅞"	7"	⅝"	11"	2"	3"	1 13/16"	1½"ø x 4'-4"	6½"	¾"
10"ø x ¼"	1'-6"	⅞"	¾"	6"	⅝"	11"	2"	3"	1 11/16"	1⅜"ø x 4'-0"	6¼"	¾"
9½"ø x ½"	1'-7"	1"	⅞"	7"	⅞"	11"	2"	3"	2 1/16"	1¾"ø x 5'-1"	7¾"	¾"
9½"ø x ⅜"	1'-6"	⅞"	¾"	6½"	⅝"	11"	2"	3"	1 13/16"	1½"ø x 4'-4"	6½"	¾"
9½"ø x ¼"	1'-5"	⅞"	¾"	6"	⅝"	11"	2"	3"	1 11/16"	1⅜"ø x 4'-0"	6¼"	¾"
9"ø x ½"	1'-7"	1"	⅞"	7"	⅝"	10"	2"	3"	1 13/16"	1½"ø x 4'-4"	6½"	¾"
9"ø x ⅜"	1'-6"	⅞"	¾"	6½"	⅝"	10"	2"	3"	1 11/16"	1⅜"ø x 4'-0"	6¼"	¾"
9"ø x ¼"	1'-5"	⅞"	¾"	6"	⅜"	10"	2"	3"	1 9/16"	1¼"ø x 3'-8"	5¾"	⅝"
8½"ø x ½"	1'-7"	1"	⅞"	7"	⅝"	10"	2"	3"	1 13/16"	1½"ø x 4'-4"	6½"	¾"
8½"ø x ⅜"	1'-6"	⅞"	¾"	7"	⅜"	10"	2"	3"	1 11/16"	1⅜"ø x 4'-0"	6¼"	¾"
8½"ø x ¼"	1'-4"	¾"	⅝"	5¾"	⅜"	10"	2"	2½"	1 9/16"	1¼"ø x 3'-8"	5¾"	⅝"
8"ø x ½"	1'-6"	⅞"	¾"	7"	⅜"	9½"	2"	3"	1 11/16"	1⅜"ø x 4'-0"	6¼"	¾"
8"ø x ⅜"	1'-5"	⅞"	¾"	6"	⅜"	9½"	2"	2½"	1 9/16"	1¼"ø x 3'-8"	5¾"	⅝"
8"ø x ¼"	1'-4"	¾"	⅝"	5¾"	⅜"	9½"	2"	2½"	1 9/16"	1¼"ø x 3'-8"	5¾"	⅝"
7½"ø x ½"	1'-6"	⅞"	¾"	7"	⅜"	9"	2"	3"	1 11/16"	1⅜"ø x 4'-0"	6¼"	¾"
7½"ø x ⅜"	1'-5"	⅞"	¾"	6"	⅜"	9"	2"	2½"	1 9/16"	1¼"ø x 3'-8"	5¾"	⅝"
7½"ø x ¼"	1'-3"	¾"	⅝"	5½"	⅜"	9"	2"	2¼"	1 7/16"	1⅛"ø x 3'-4"	5½"	⅝"
7"ø x ½"	1'-5"	⅞"	¾"	6"	⅜"	9"	2"	2½"	1 9/16"	1¼"ø x 3'-8"	5¾"	⅝"
7"ø x ⅜"	1'-4"	¾"	⅝"	5¾"	⅜"	9"	2"	2½"	1 9/16"	1¼"ø x 3'-8"	5¾"	⅝"
7"ø x ¼"	1'-3"	¾"	⅝"	5½"	⅜"	9"	2"	2¼"	1 7/16"	1⅛"ø x 3'-4"	5½"	⅝"
6½"ø x ½"	1'-4"	¾"	⅝"	5¾"	⅜"	8"	2"	2½"	1 9/16"	1¼"ø x 3'-8"	5¾"	⅝"
6½"ø x ⅜"	1'-3"	¾"	⅝"	5½"	⅜"	8"	2"	2¼"	1 7/16"	1⅛"ø x 3'-4"	5½"	⅝"
6½"ø x ¼"	1'-2"	⅜"	⅝"	5¼"	⅜"	8"	2"	2"	1 5/16"	1"ø x 2'-11"	5"	⅝"
6"ø x ½"	1'-3"	¾"	⅝"	5½"	⅜"	8"	2"	2¼"	1 7/16"	1⅛"ø x 3'-4"	5½"	⅝"
6"ø x ⅜"	1'-3"	¾"	⅝"	5½"	⅜"	8"	2"	2¼"	1 7/16"	1⅛"ø x 3'-4"	5½"	⅝"
6"ø x ¼"	1'-2"	⅜"	⅝"	5¼"	⅜"	8"	2"	2"	1 5/16"	1"ø x 2'-11"	5"	⅝"
5½"ø x ½"	1'-3"	¾"	⅝"	5½"	⅜"	7"	2"	2"	1 7/16"	1⅛"ø x 3'-4"	5½"	⅝"
5½"ø x ¼"	1'-1"	⅜"	⅝"	5"	⅜"	7"	1¾"	1¾"	1 3/16"	⅞"ø x 2'-7"	4¾"	⅝"
5"ø x ½"	1'-2"	⅜"	⅝"	5¼"	⅜"	7"	2"	2"	1 5/16"	1"ø x 2'-11"	5"	⅝"
5"ø x ¼"	1'-1"	⅜"	⅝"	5"	⅜"	7"	1¾"	1¾"	1 3/16"	⅞"ø x 2'-7"	4¾"	½"
4¾"ø x ¼"	1'-0"	⅜"	⅝"	4¾"	⅜"	7"	1¾"	1¾"	1 3/16"	⅞"ø x 2'-7"	4¾"	½"
4½"ø x ¼"	1'-0"	½"	½"	4¾"	5/16"	7"	1¾"	1½"	1 1/16"	¾"ø x 2'-3"	4½"	½"
4¼"ø x ¼"	1'-0"	½"	½"	4¾"	5/16"	7"	1¾"	1½"	1 1/16"	¾"ø x 2'-3"	4½"	½"
4"ø x ¼"	1'-0"	½"	½"	4¾"	5/16"	7"	1¾"	1½"	1 1/16"	¾"ø x 2'-3"	4½"	½"

NOTE : For Column Size not Tabulated use next Larger Diameter and Wall Thickness

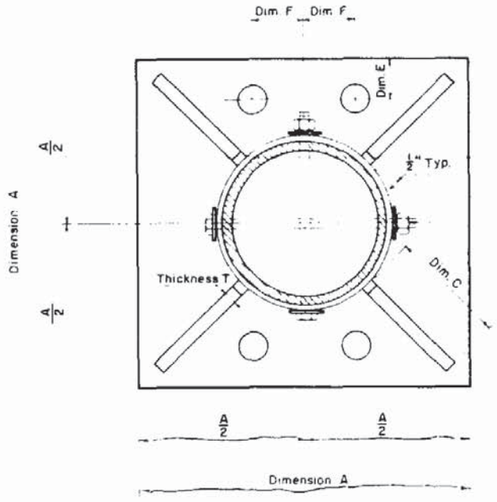

SECTION A-A

NOTE
Thickness of Sleeve shall match that of Column. Inside diameter of the sleeve shall provide for a slip fit of the Column.

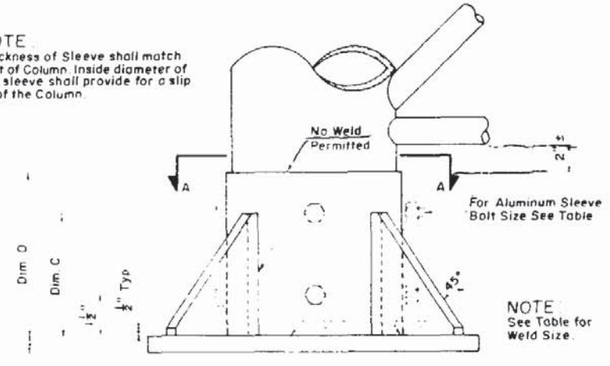

ELEVATION

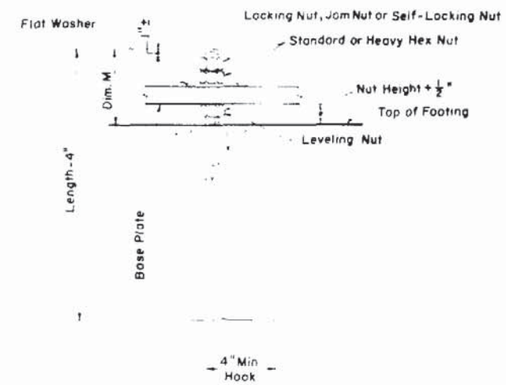

ANCHOR BOLT DETAIL

SPECIFICATIONS

EXTRUDED TUBING: The material used shall meet the requirements of the Aluminum Association Alloy 6061-T6 and also the A.S.T.M. Specifications B-221.

WELDING RODS: Aluminum Association Alloy No. 5556 Filler Wire.

TOLERANCE: All above materials shall be in keeping with the A.S.T.M. Specifications.

ALUMINUM BOLTS, NUTS, AND LOCKWASHERS: Aluminum Bolts shall meet the requirements of the Aluminum Association Alloy 2024-T4 or 6061-T6 (A.S.T.M. Specification B-211). The Bolts shall have an anodic coating at least 0.0002" thick and Cromate Sealed. Lockwashers shall meet the requirements of the Aluminum Association Alloy 7075-T6 (A.S.T.M. Specification B-221). Nuts shall meet the requirements of the Aluminum Association Alloy 6262-T9 or 6061-T6.

MATERIAL STRESSES: All allowable stresses are in accordance with the "Standard Specifications for Structural Supports for Highway Signs, Luminaires and Traffic Signals," A.A.S.H.O., 1975 and approved revisions for all materials shown on the Plans.

SHEETS AND PLATES: The material used shall meet the requirements of the Aluminum Association Alloy 6061-T6 and also the A.S.T.M. Specifications B-209.

SHOP DRAWINGS: The Contractor shall submit complete Shop Drawings before fabrication for approval by the Engineer.

STEEL BOLTS, NUTS & LOCKWASHERS: All Anchor Bolts, Nuts and Lockwashers shall meet the requirements of A.S.T.M. Specification A-307 and shall be hot dip galvanized in accordance with the requirements of A.S.T.M. Specification A-153.

FED. ROAD DIV. NO.	STATE	PROJECT NO.	FISCAL YEAR	SHEET NO.
3	FLA.			

BASES FOR
OVERHEAD BRIDGE TRUSS
4 POST CANTILEVER TRUSS
SINGLE POST CANTILEVER

STATE OF FLORIDA DEPARTMENT OF TRANSPORTATION
STRUCTURES

ALUMINUM BASES FOR COLUMN SUPPORTS

REVISIONS		ROAD NO.	COUNTY	PROJECT NO.
Dates	Descriptions			

	Names	Dates
Designed by	H.A.V.	5-76
Checked by	C.W.B.	6-76
Quantities by		
Checked by		
Supervised by	A.J.H.	

APPROVED BY
Deputy Design Engineer Structures

Drawing No. 1 of 1
Index No. 11926

FED. ROAD DIV. NO.	STATE	PROJECT NO	FISCAL YEAR	SHEET NO.
3	FLA.			

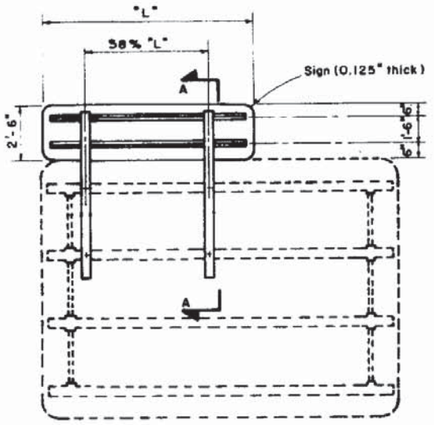

ELEVATION

Mounting of Exit Numbering Panels To Highway Signs

NOTE: EXIT NUMBERING PANEL Shall be Located To The Right Side For Right Exit and To The Left For Left Exit.

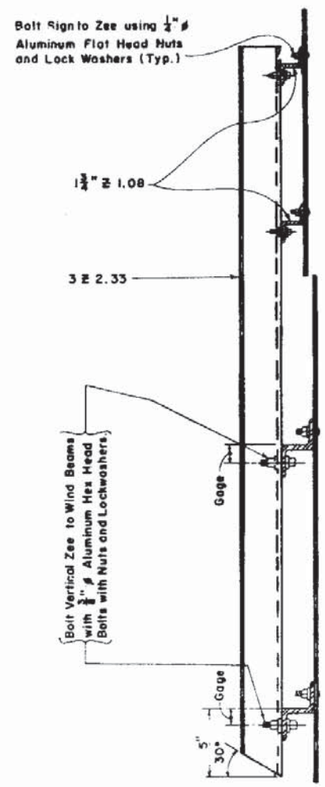

SECTION A-A

GENERAL NOTES

DESIGN SPECIFICATION: Standard Specifications for Structural Supports for Highway Signs, Luminaires and Traffic Signals, A.A.S.H.O., 1975.

SHEETS AND PLATES: Material used shall meet the requirements of Aluminum Association Alloy 6061-T6 and ASTM Specification B-209. Sheets are to be degreased, etched, neutralized and treated with Alodine 1200, Iridite 14-2, Bonderite 721, or equal. No stenciling permitted on Sheets.

MATERIALS: All Aluminum Materials shall meet the requirements of the Aluminum Association Alloy 6061-T6 and also the following ASTM Specifications for the following; Sheet and Plates B-209, Extruded Shapes B-221 and Standard Structural Shapes B-308.

ALUMINUM BOLTS, NUTS & LOCKWASHERS: Aluminum Bolts shall meet the requirements of Aluminum Association Alloy 2024-T4 or 6061-T6 (ASTM Spec. B-211). The Bolts shall have an Anodic Coating of at least 0.0002" thick and be Chromate Sealed. Lockwashers shall meet the requirements of Aluminum Association Alloy 7075-T6 (ASTM Specification B-221). Nuts shall meet the requirement of Aluminum Association Alloy 6262-T9 or 6061-T6.

SIGN FACE: All Sign Face Corners shall be rounded. See Sign Layout Sheet for Dimension "L" and Sign Face Details.

MATERIAL STRESSES: All allowable stresses are in accordance with the Standard Specifications for Structural Supports for Highway Signs, Luminaires and Traffic Signals, A.A.S.H.O., 1975, for all materials shown in the Plans.

FOR MOUNTING DETAILS REFER TO DRAWING NO. 1 OF 1, INDEX 11037.

STATE OF FLORIDA DEPARTMENT OF TRANSPORTATION
STRUCTURES

DETAILS FOR MOUNTING EXIT NUMBERING PANELS TO HIGHWAY SIGNS

REVISIONS		ROAD NO.	COUNTY	PROJECT NO.
Dates	Descriptions			
			Names	Dates
		Designed by	CK CWB	7-82
		Checked by	CK	7-82
		Quantities by		
		Checked by		
		Supervised by	AJH	

APPROVED BY

Deputy Design Engineer Structures

Drawing No.	Index No.
1 of 1	13417

CASE I

FOR USE IN ALL RURAL ROADS AND ON FREEWAY AND EXPRESSWAY RAMPS.

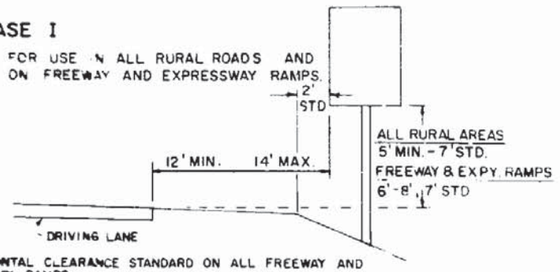

14' HORIZONTAL CLEARANCE STANDARD ON ALL FREEWAY AND EXPRESSWAY RAMPS

CASE II

FOR USE IN ALL RURAL ROADS AND ON FREEWAY AND EXPRESSWAY RAMPS.

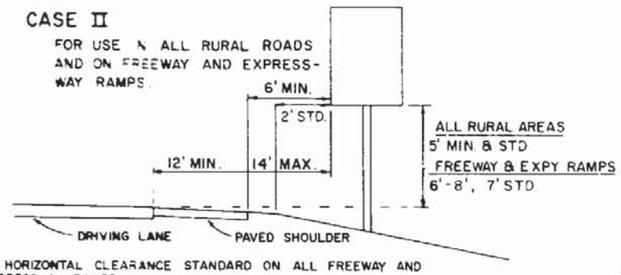

14' HORIZONTAL CLEARANCE STANDARD ON ALL FREEWAY AND EXPRESSWAY RAMPS

CASE III

FOR USE IN ALL RURAL ROADS AND ON FREEWAY AND EXPRESSWAY RAMPS

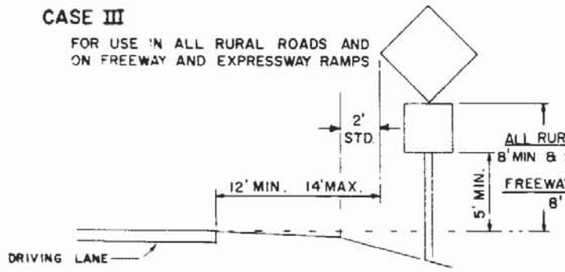

14' HORIZONTAL CLEARANCE STANDARD ON ALL FREEWAY AND EXPRESSWAY RAMPS

CASE IV

FOR USE ON ALL FREEWAY AND EXPRESSWAY SYSTEMS FOR SIGNS ON MAINLINE

* IF A SECONDARY SIGN IS MOUNTED BELOW THE MAJOR SIGN, THE MAJOR SIGN SHALL BE AT LEAST 8' AND THE SECONDARY SIGN AT LEAST 5' ABOVE THE PAVEMENT EDGE

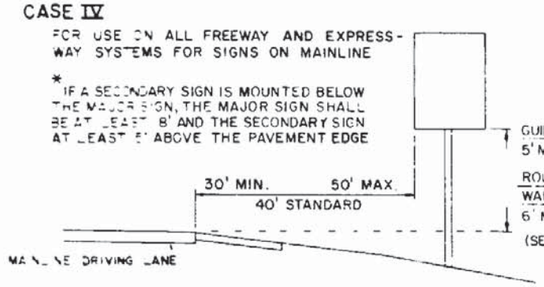

CASE V

FOR USE IN BUSINESS OR RESIDENTIAL AREAS ONLY

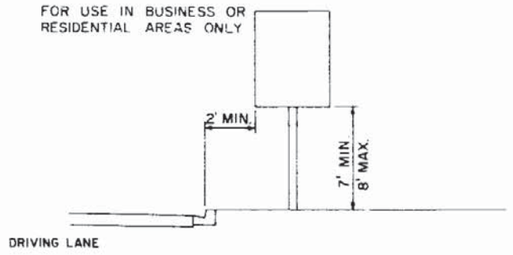

CASE VI

SIGN ON ISLAND

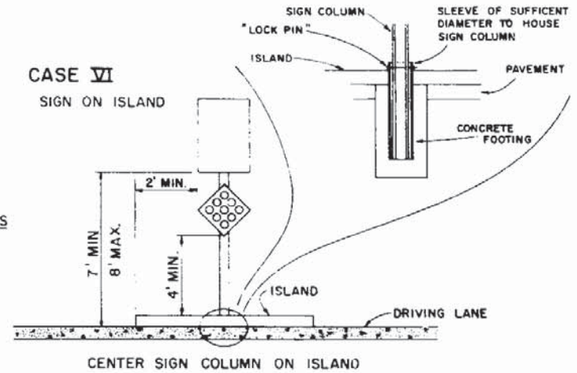

CENTER SIGN COLUMN ON ISLAND

CASE VII (MERGE SIGN)

FOR USE ON ALL RURAL, FREEWAY AND EXPRESSWAY SYSTEMS

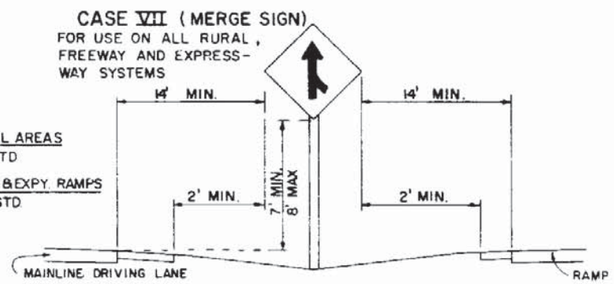

14' MIN. HORIZONTAL CLEARANCE SHALL BE MAINTAINED ON ALL FREEWAY AND EXPRESSWAY SYSTEMS

CASE VIII

FOR USE ON ALL FREEWAY AND EXPRESSWAY SYSTEMS FOR SIGNS MOUNTED IN THE MEDIAN.

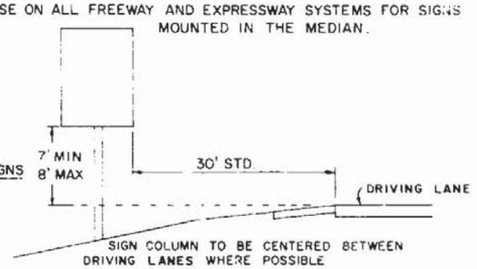

SIGN COLUMN TO BE CENTERED BETWEEN DRIVING LANES WHERE POSSIBLE

CASE IX (REST AREA & EXIT GORE SIGNS)

FOR USE ON ALL FREEWAY AND EXPRESSWAY SYSTEMS

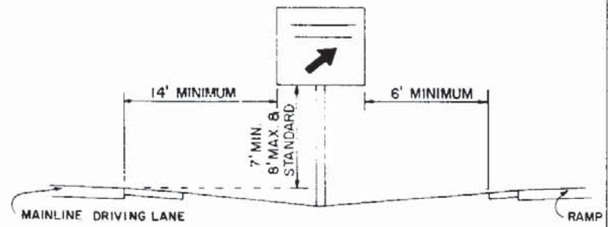

CASE X

FOR USE ON ALL FREEWAY AND EXPRESSWAY SYSTEMS WITH SIGNS BEHIND GUARDRAIL

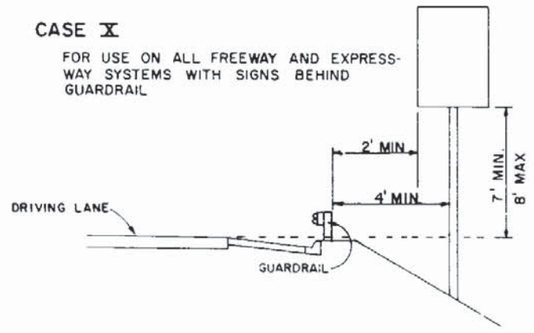

CASE XI (MILE POST MARKER)

FOR MORE INFORMATION REFER TO PART 2D-47 OF THE MANUAL ON UNIFORM TRAFFIC CONTROL DEVICES

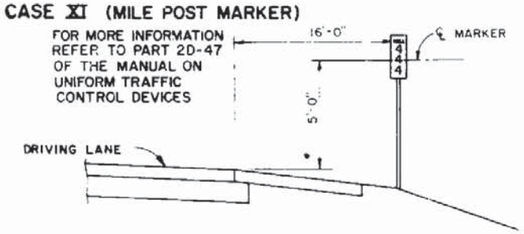

GENERAL NOTES:

1. The Typical sections shown hereon serve as a guide for use in locating the traffic signs required under various roadside conditions. For size and details of sign construction and footing, refer to the appropriate standard index drawing for roadside sign.
2. It shall be the CONTRACTORS responsibility to verify the length of sign supports in the field prior to fabrication
3. SIGN DISTANCE FROM EDGE OF ROADWAY | ANGLE ∝

LESS THAN 20'	0°
≤ 30'	3°
≤ 40'	4°
≤ 50'	5°

(SEE ILLUSTRATION)

Where lanes divide or on curves, sign faces shall be oriented so as to be most effective both day and night, and to avoid the possibility of specular reflection.

4. Horizontal clearance may be altered in the field by the PROJECT ENGINEER to better fit existing terrain

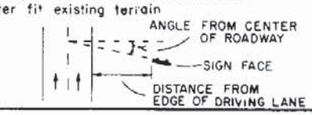

CASE XIV (BICYCLE LANE SIGNING)

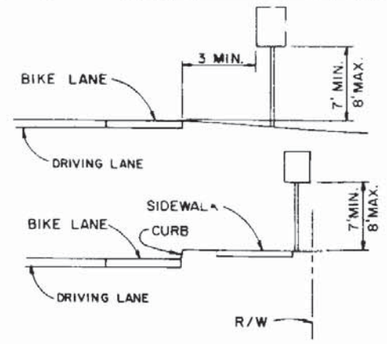

FOR USE ON ALL ROADS HAVING BICYCLE LANE WITH SIGNS MOUNTED ON SHOULDER.

FOR USE ON ALL ROADS HAVING BICYCLE LANE WITH SIGNS MOUNTED IN OR BEHIND SIDEWALK.

CASE XII

FOR USE ON ALL ROADS WITH SIGNS MOUNTED IN SIDEWALK

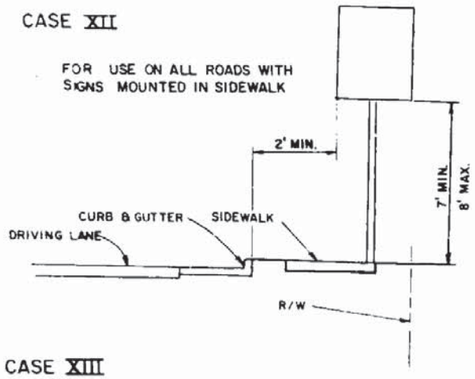

CASE XIII

FOR USE ON ALL ROADS WITH SIGNS MOUNTED BEHIND SIDEWALK.

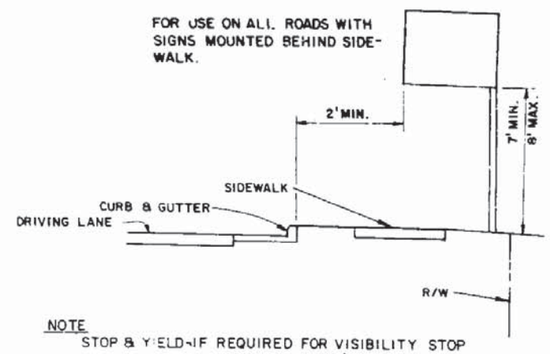

NOTE

STOP & YIELD IF REQUIRED FOR VISIBILITY STOP & YIELD SIGNS MAY BE SET 3' MINIMUM FROM DRIVING LANE IN BUSINESS OR RESIDENTIAL SECTIONS WITH NO CURB AND SPEED LIMIT OF 30 MPH OR LESS

REVISIONS			
DATE	INITIALS	DESCRIPTION	
11/75	WB-KR-RM	MTG. HT + OTHER CLARIFICATIONS	
1-27-76	WB-KR-RM	REVISE SPACING	
7-10-78	PB	REVISED CLEARANCE CASE V.	
9-15-85	MC	REVISED CLEARANCE CASE IX	

FLORIDA DEPARTMENT OF TRANSPORTATION
TRAFFIC DESIGN

TYPICAL SECTIONS FOR ONE COLUMN SIGN PLACEMENT

	INITIALS	DATES
DETAILED BY	G.W.	3-75
CHECKED BY		
QUANTITIES BY		
CHECKED BY		
SUPERVISED BY	K R	3-75

Approved by _____
STATE DESIGN ENGINEER – RDW1

DRAWING NO. 1 of 1 | INDEX NO. 17302

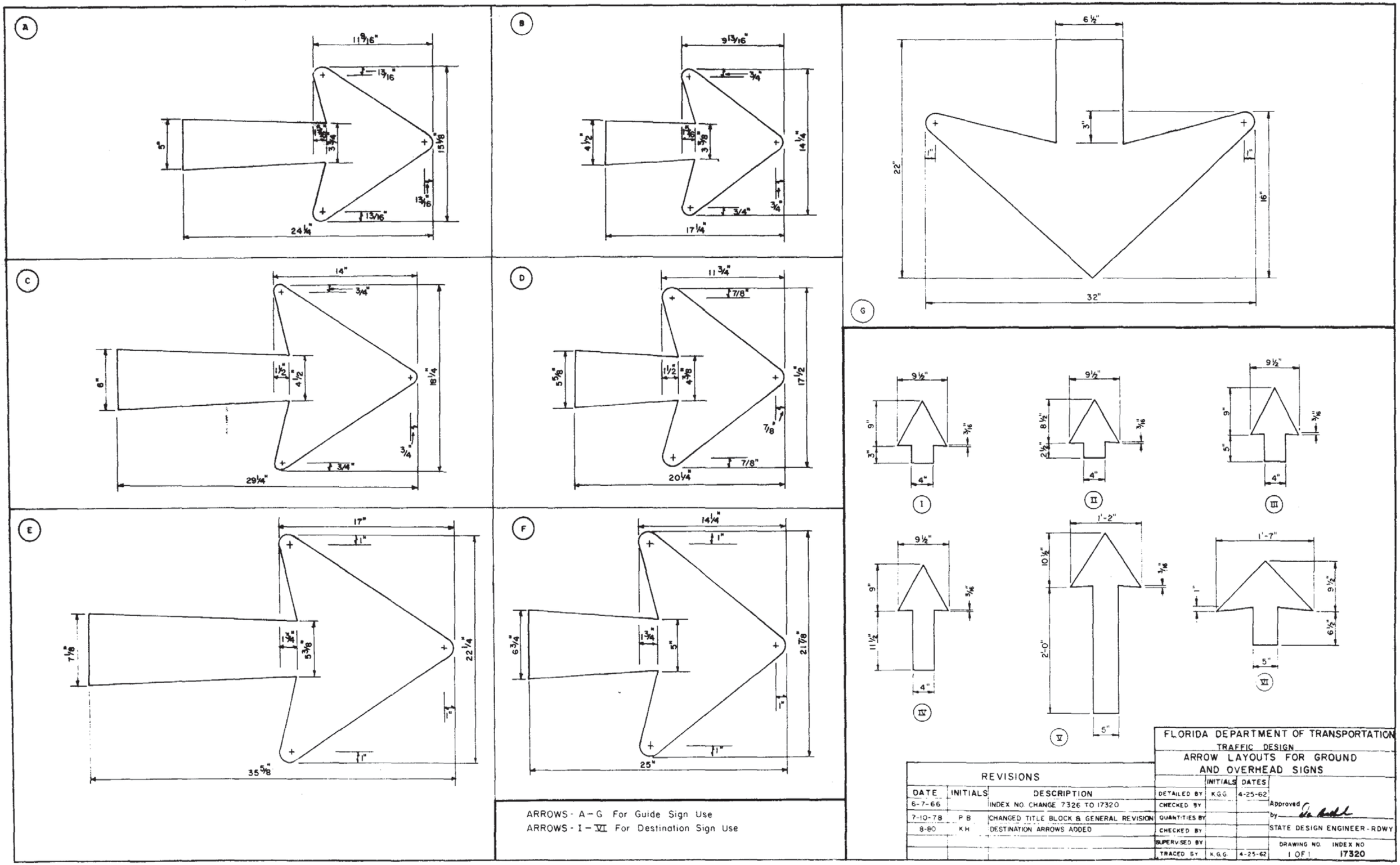

ARROWS - A – G For Guide Sign Use
ARROWS - I – VI For Destination Sign Use

REVISIONS		
DATE	INITIALS	DESCRIPTION
6-7-66		INDEX NO. CHANGE 7326 TO 17320
7-10-78	P B	CHANGED TITLE BLOCK & GENERAL REVISION
8-80	K H	DESTINATION ARROWS ADDED

FLORIDA DEPARTMENT OF TRANSPORTATION
TRAFFIC DESIGN
ARROW LAYOUTS FOR GROUND AND OVERHEAD SIGNS

	INITIALS	DATES
DETAILED BY	K.G.G.	4-25-62
CHECKED BY		
QUANTITIES BY		
CHECKED BY		
SUPERVISED BY		
TRACED BY	K.G.G.	4-25-62

Approved by _____ STATE DESIGN ENGINEER - RDWY

DRAWING NO. 1 OF 1 | INDEX NO. 17320

FOR FREEWAY USE

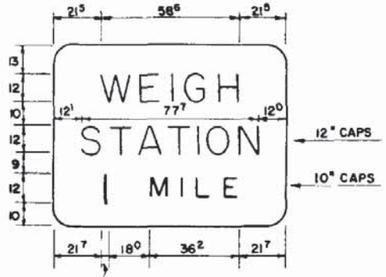

12" CAPS
10" CAPS

SIGN NO. FTO-3
8'-6" X 6'-6"
2" BORDER - 9" RAD.

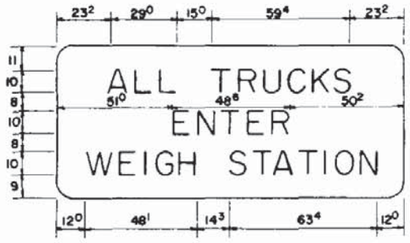

10" CAPS

SIGN NO. FTO-4
12'-6" X 5'-6"
2" BORDER - 9" RAD.

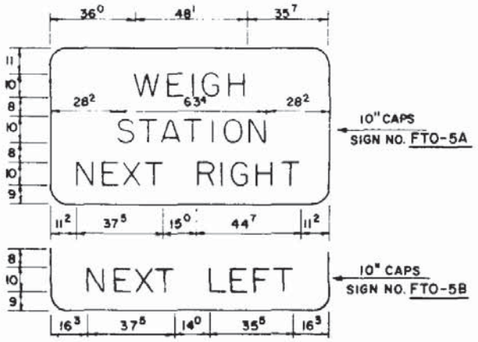

10" CAPS
SIGN NO. FTO-5A

10" CAPS
SIGN NO. FTO-5B

10'-0" x 5'-6"
2" BOR-9" RAD.

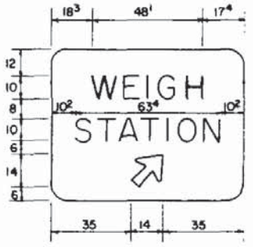

10" CAPS

SIGN NO. FTO-6
7'-0" X 5'-6"
2" BORDER - 6" RAD.

NOTE:
FTO-6A __ RIGHT ARROW
FTO-6B __ LEFT ARROW

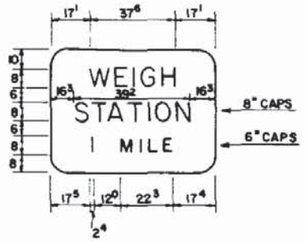

8" CAPS
6" CAPS

SIGN NO. FTO-7
6'-0" X 4'-6"
2" BORDER - 6" RAD.

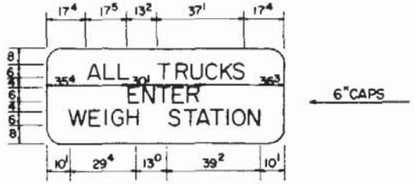

6" CAPS

SIGN NO. FTO-8
8'-6" X 3'-6"
2" BORDER - 6" RAD.

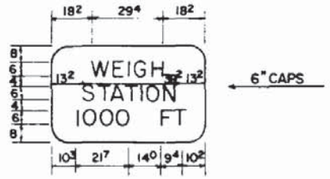

6" CAPS

SIGN NO. FTO-9
5'-6" X 3'-6"
2" BORDER - 6" RAD.

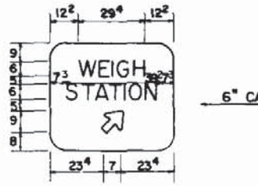

6" CAPS

SIGN NO. FTO-10
4'-6" X 4'-0"
2" BORDER - 6" RAD.

NOTE:
FTO-10A __ RIGHT ARROW
FTO-10B __ LEFT ARROW

FOR OTHER THAN FREEWAY USE

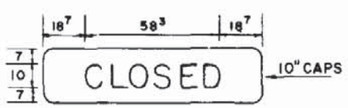

10" CAPS

SIGN NO. FTO-11
8'-0" x 2'-0"
2" BOR. 3" RAD

NOTE
SIGN NO. FTO-11 TO BE USED WITH SIGNS NO. FTO-5A & B, FTO-15A & B.



8" CAPS

SIGN NO. FTO-12
5'-6" x 2'-0"
2" BOR. 3" RAD.

NOTE
SIGN NO. FTO-12 TO BE USED WITH SIGN NO. FTO-9.

NOTE

ALL SIGNS TO HAVE GREEN REFLECTORIZED BACKGROUND
WITH WHITE LEGEND AND BORDER
EXCEPT SIGNS NOS. FTO-4 & FTO-8.
WHICH SHALL HAVE WHITE BACKGROUND
WITH BLACK LEGEND AND BORDER

ALL DIMENSIONS SHOWN ARE IN
INCHES AND EIGHTHS

REVISIONS		
DATE	INITIALS	DESCRIPTION

FLORIDA DEPARTMENT OF TRANSPORTATION
TRAFFIC DESIGN

TYPICAL SIGNING FOR
TRUCK WEIGH AND INSPECTION STATIONS

	INITIALS	DATES
DETAILED BY	M.F.M.	I-75
CHECKED BY	K.R.	I-75
QUANTITIES BY		
CHECKED BY		
SUPERVISED BY	K.R.	I-75

Approved by _____
STATE DESIGN ENGINEER - RDWY

DRAWING NO. 1 of 3

INDEX NO 17328

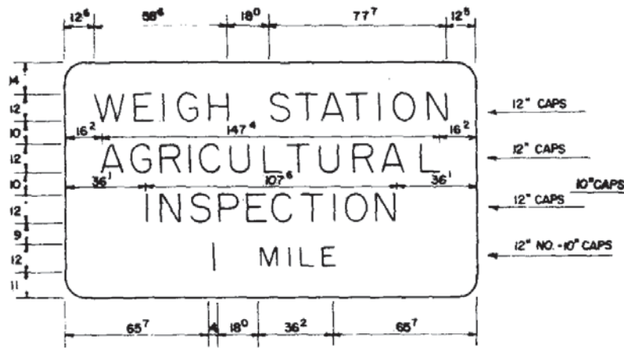

SIGN NO. FTO-13
15'-0" X 8'-6"
2" BORDER - 9" RAD.

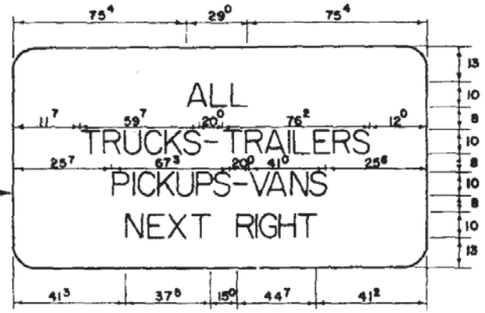

SIGN NO. FTO-14A
15'-0" X 7'-0"
2" BORDER - 9" RAD.

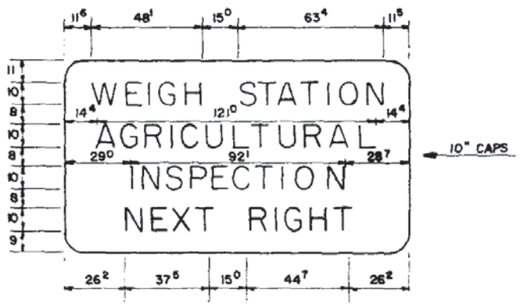

SIGN NO. FTO-15A
12'-6" X 7'-0"
2" BORDER - 9" RAD.

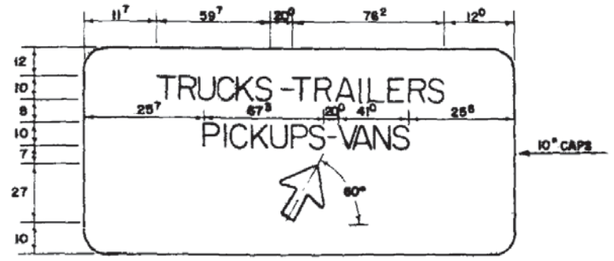

SIGN NO. FTO-16
15'-0" X 7'-0"
2" BORDER - 9" RAD.

NOTE:
FTO-16A - RIGHT ARROW
FTO-16B - LEFT ARROW

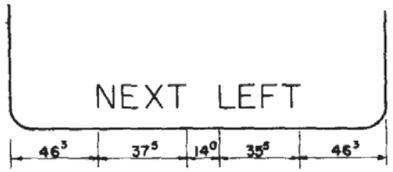

SIGN NO. FTO-14B
15'-0" X 7'-6"
2" BORDER - 9" RAD.

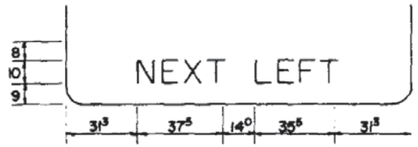

SIGN NO. FTO-15B
12'-6" X 7'-0"
2" BORDER - 9" RAD.

NOTE

ALL SIGNS SHALL HAVE GREEN REFLECTORIZED BACKGROUND WITH WHITE LEGEND AND BORDER, EXCEPT SIGNS FTO-14A&B WHICH SHALL HAVE A WHITE BACKGROUND WITH BLACK LEGEND AND BORDER.

ALL DIMENSIONS SHOWN ARE IN INCHES AND EIGHTS

ALL GUIDE SIGN CORNER RADIUS SHALL HAVE THE OUTSIDE CORNERS OF SIGN FACE CUT CONCENTRIC WITH BORDER. BORDER TO BE MOUNTED TANGENT TO AND WITH EDGE OF SIGN.

REVISIONS		
DATE	INITIALS	DESCRIPTION
10-15-79	K.R.	REVISED SIGN NOS. 10A & 12
9-15-85	M.C.	ADDED NOTE

FLORIDA DEPARTMENT OF TRANSPORTATION

TRAFFIC DESIGN

TYPICAL SIGNING FOR TRUCK WEIGH AND INSPECTION STATIONS

	INITIALS	DATES
DETAILED BY	M.F.M.	1-75
CHECKED BY	K.R.	1-75
QUANTITIES BY		
CHECKED BY		
SUPERVISED BY	K.R.	1-75

Approved by _____
STATE DESIGN ENGINEER-RDWY

DRAWING NO 2 of 3

INDEX NO. 17328

4-LANE DIVIDED INSTALLATION

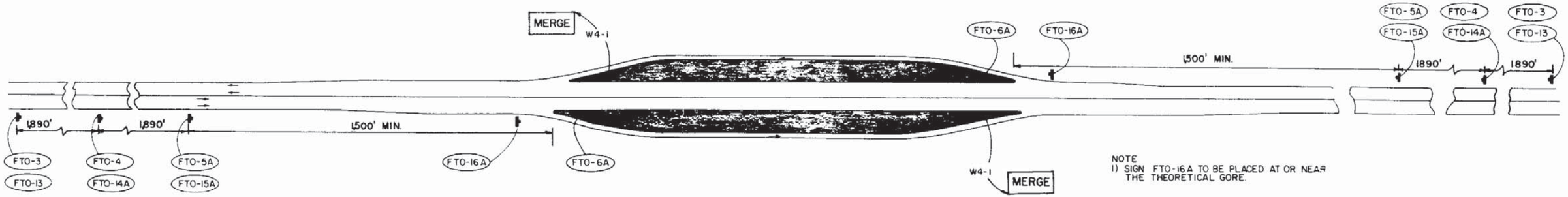

NOTE
1) SIGN FTO-16A TO BE PLACED AT OR NEAR THE THEORETICAL GORE.

2-LANE INSTALLATION

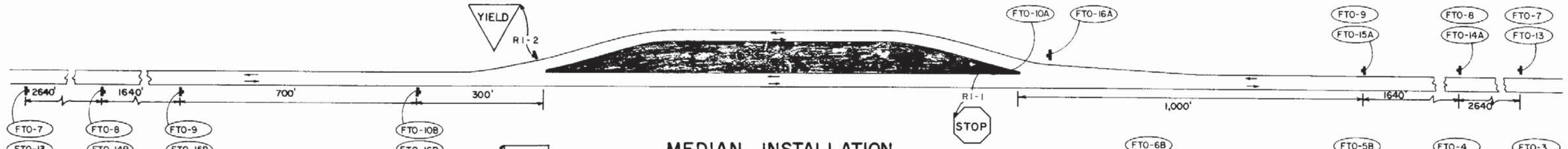

MEDIAN INSTALLATION

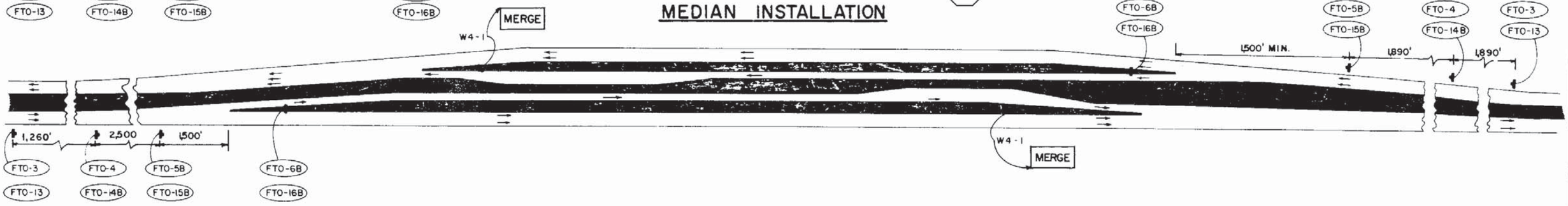

REVISIONS		
DATE	INITIALS	DESCRIPTION
10-15-79	M.C.	REVISE SIGN LOCATIONS
6-80	K.H.	UPDATE SIGN NUMBERS

FLORIDA DEPARTMENT OF TRANSPORTATION

TRAFFIC DESIGN

TYPICAL SIGNING FOR
TRUCK WEIGH AND INSPECTION STATIONS

	INITIALS	DATES
DETAILED BY	M.F.M.	1-75
CHECKED BY	K.R	1-75
QUANTITIES BY		
CHECKED BY		
SUPERVISED BY	K.R.	1-75

Approved by _____
STATE DESIGN ENGINEER-RDWY

DRAWING NO. 3 of 3

INDEX NO. 17328

APPROACH SPEED (MPH)	DISTANCE A
25 TO 35	275 FT.
36 TO 45	350 FT.
46 TO 55	500 FT.

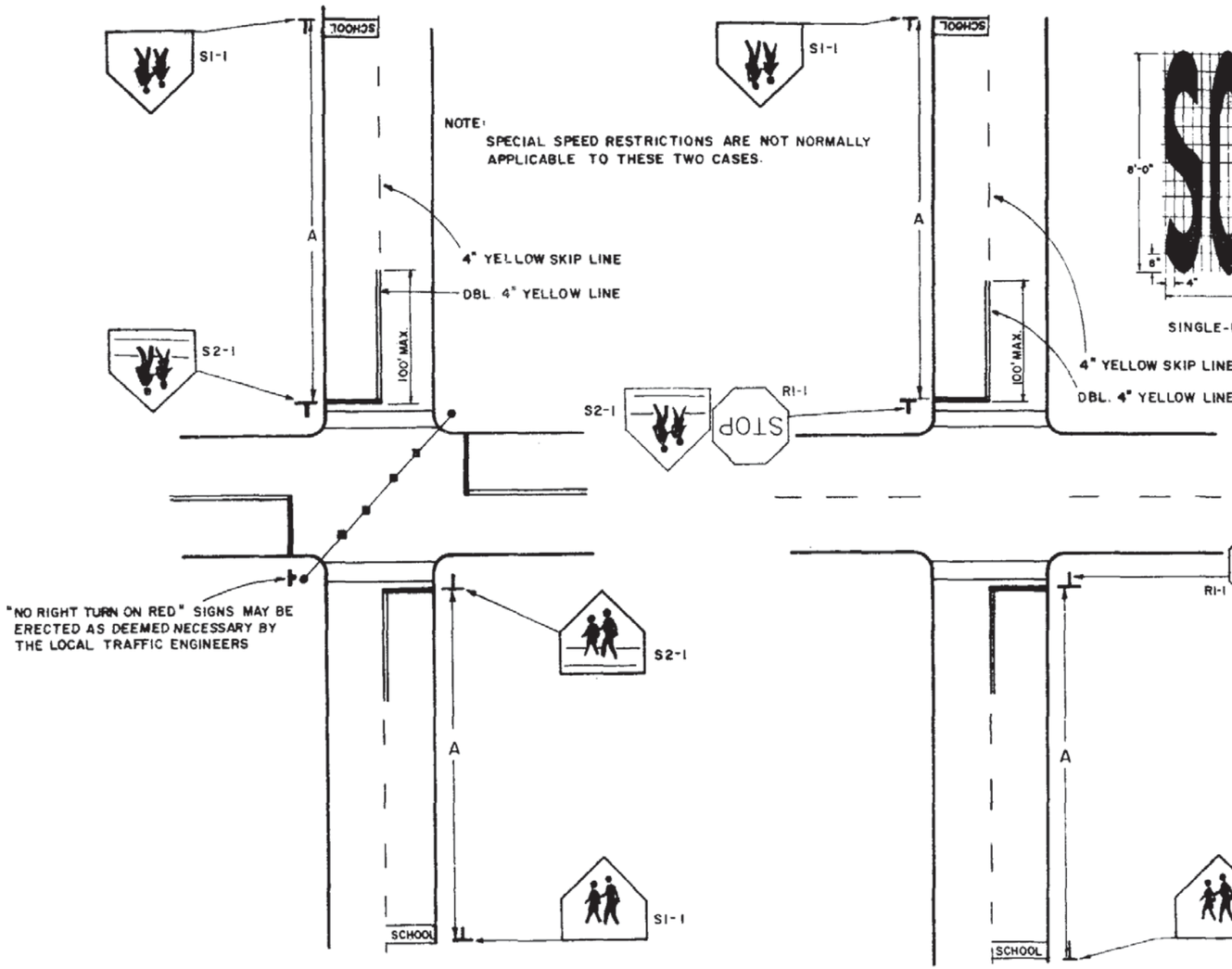

1. TRAFFIC CONTROL DEVICES FOR A SCHOOL CROSSWALK AT A SIGNALIZED INTERSECTION

2. TRAFFIC CONTROL DEVICES FOR A SCHOOL CROSSWALK AT A STOP CONTROLLED INTERSECTION

SINGLE-LANE PAVEMENT MARKING
33 s.f.

PAVEMENT MARKINGS

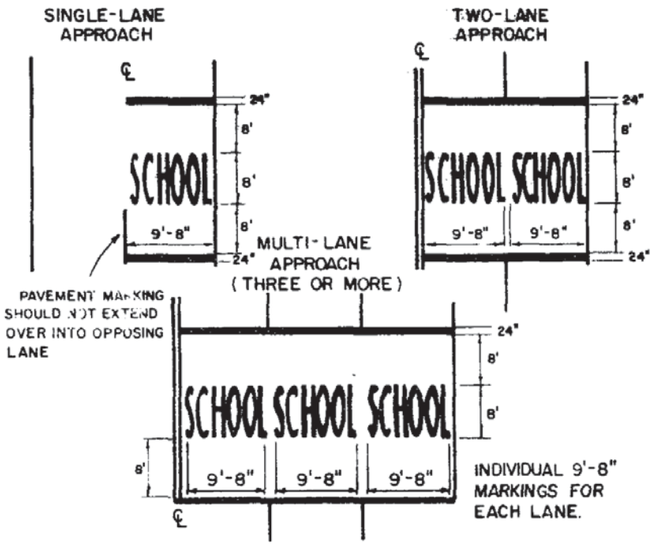

NOTE

WHEN COMPUTING PAVEMENT MESSAGES QUANTITIES DO NOT INCLUDE TRANSVERSE LINES.

NOTE

SIGNS ERECTED AT THE SIDE OF THE ROAD IN RURAL DISTRICTS SHALL BE MOUNTED AT A HEIGHT OF AT LEAST 5 FEET, MEASURED FROM THE BOTTOM OF THE SIGN TO THE LEVEL OF THE ROADWAY EDGE. IN BUSINESS, COMMERCIAL AND RESIDENTIAL DISTRICTS WHERE PARKING AND/OR PEDESTRIAN MOVEMENT IS LIKELY TO OCCUR OR WHERE THERE ARE OTHER OBSTRUCTIONS TO VIEW, THE CLEARANCE TO THE BOTTOM OF THE SIGN SHALL BE AT LEAST 7 FEET.

NOTE

ALL SCHOOL SIGNS SHALL BE REFLECTORIZED

FLORIDA DEPARTMENT OF TRANSPORTATION
TRAFFIC DESIGN

SCHOOL SIGNS & MARKINGS

REVISIONS				INITIALS	DATES
DATE	BY	DESCRIPTION	Detailed by	CEJ	7-76
9-78	SWR	Added note, & Changed size of transverse lines	Checked by	KR	7-76
9-79	JMC	Deleted Fla. Statute No.	Quantities by		
8-80	K H	Deleted Educational Plaque	Checked by		
9-9-81	R.L.	Added Pavement messages	Supervised by		

Approved by _____
STATE DESIGN ENGINEER-RDWY

DRAWING NO. 1 of 6

INDEX NO. 17344

APPROACH SPEED MPH	SUGGESTED DISTANCE IN FEET A	B
25 TO 35	275	50
36 TO 45	350	65
46 TO 55	500	80

A* & B* DISTANCES SHALL BE INCREASED BY ADDING THE INTERSECTING STREET WIDTH (CURB RETURNS INCLUDED) TO DIMENSIONS GIVEN IN TABLE ABOVE.

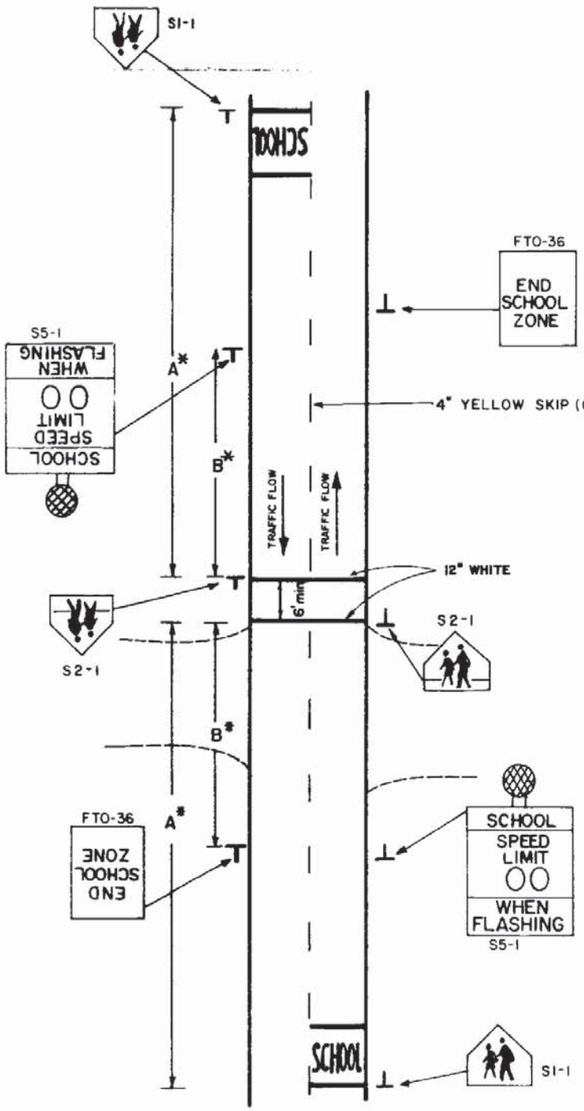

3. TRAFFIC CONTROL DEVICES WITH FLASHING BEACON FOR REDUCED SPEED ZONE AT A SCHOOL CROSSWALK
(2 LANES - 2 WAY TRAFFIC)
(MIDBLOCK OR ON THRU STREET AT AN INTERSECTION)

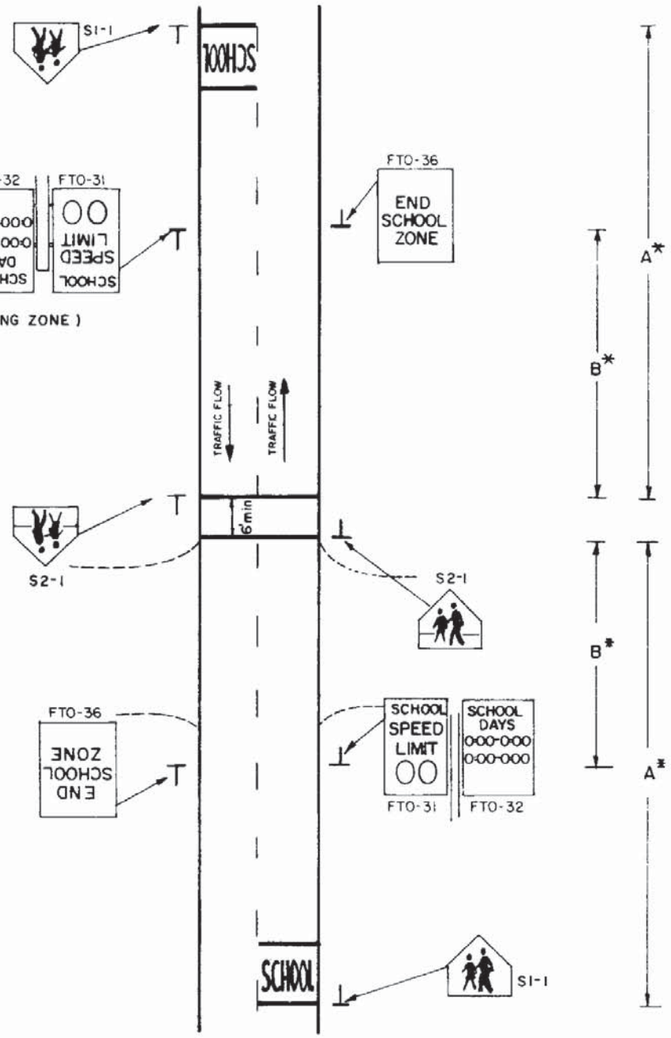

4. TRAFFIC CONTROL DEVICES FOR A REDUCED SPEED ZONE AT A SCHOOL CROSSWALK (NO FLASHING BEACON)
(2 LANES - 2 WAY TRAFFIC)
(MIDBLOCK OR ON THRU STREET AT AN INTERSECTION)

5. TRAFFIC CONTROL DEVICES FOR A REDUCED SPEED ZONE AT A SCHOOL CROSSWALK WITH OVERHEAD FLASHING BEACON SPEED LIMIT SIGNS
(4 LANES UNDIVIDED - 2 WAY TRAFFIC)
(MIDBLOCK OR ON THRU STREET AT AN INTERSECTION)

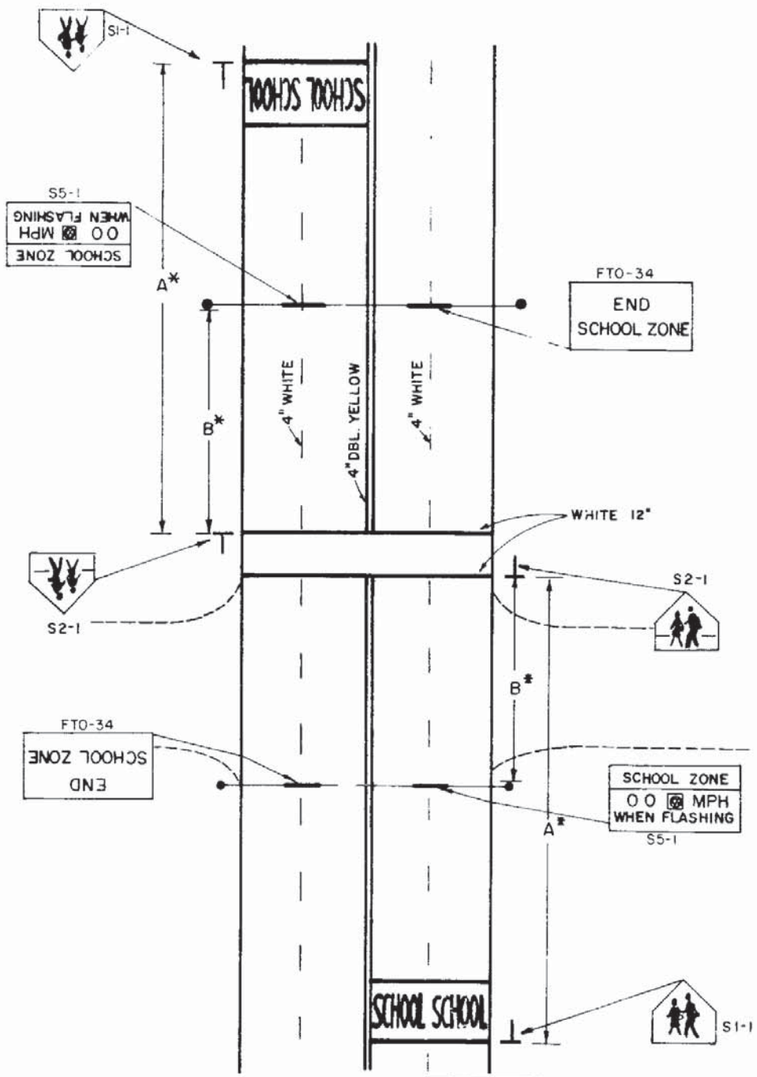

FLORIDA DEPARTMENT OF TRANSPORTATION
TRAFFIC DESIGN

SCHOOL SIGNS & MARKINGS

REVISIONS				INITIALS	DATES	
DATE	BY	DESCRIPTION	Designed by	CEJ	7-76	Approved
9-78	S.W.R.	Changed crosswalk dimensions	Checked by	KR	7-76	by
9-79	J.M.C.	Deleted Florida Statute	Quantities by			STATE DESIGN ENGINEER-RDWY
8-80	K. H.	Deleted Educational Plaque	Checked by			
			Supervised by			DRAWING NO. 2 of 6 / INDEX NO. 17344

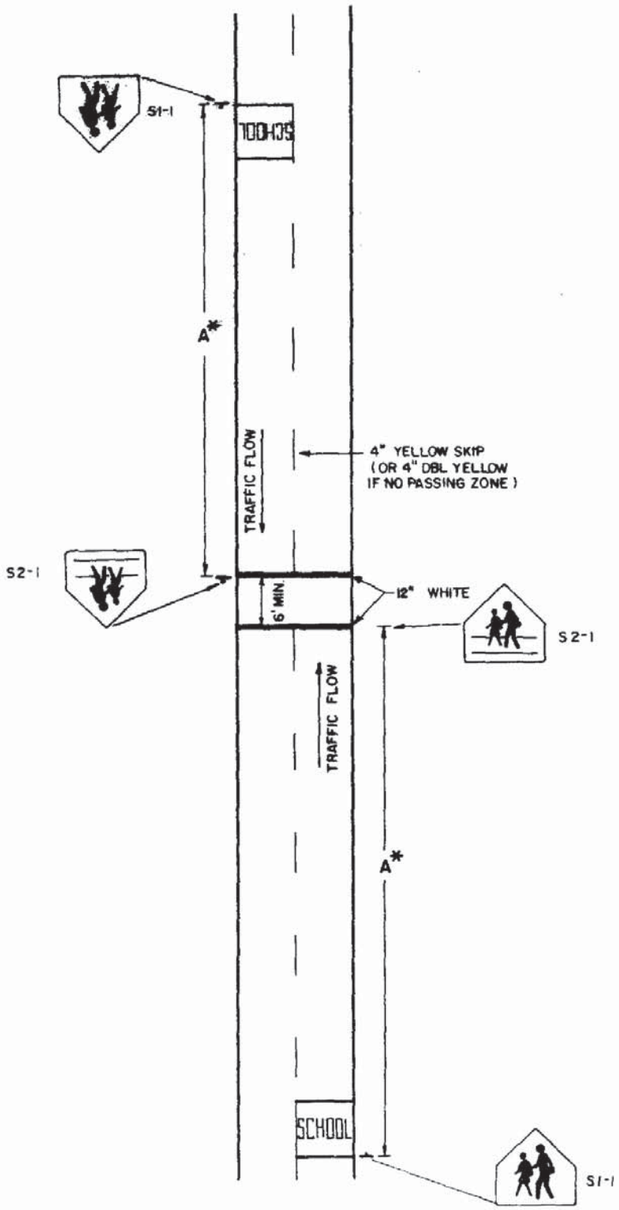

6. TRAFFIC CONTROL DEVICES FOR A SCHOOL CROSSWALK
WITHOUT A SPEED REDUCTION
(2 LANES - 2 WAY TRAFFIC)

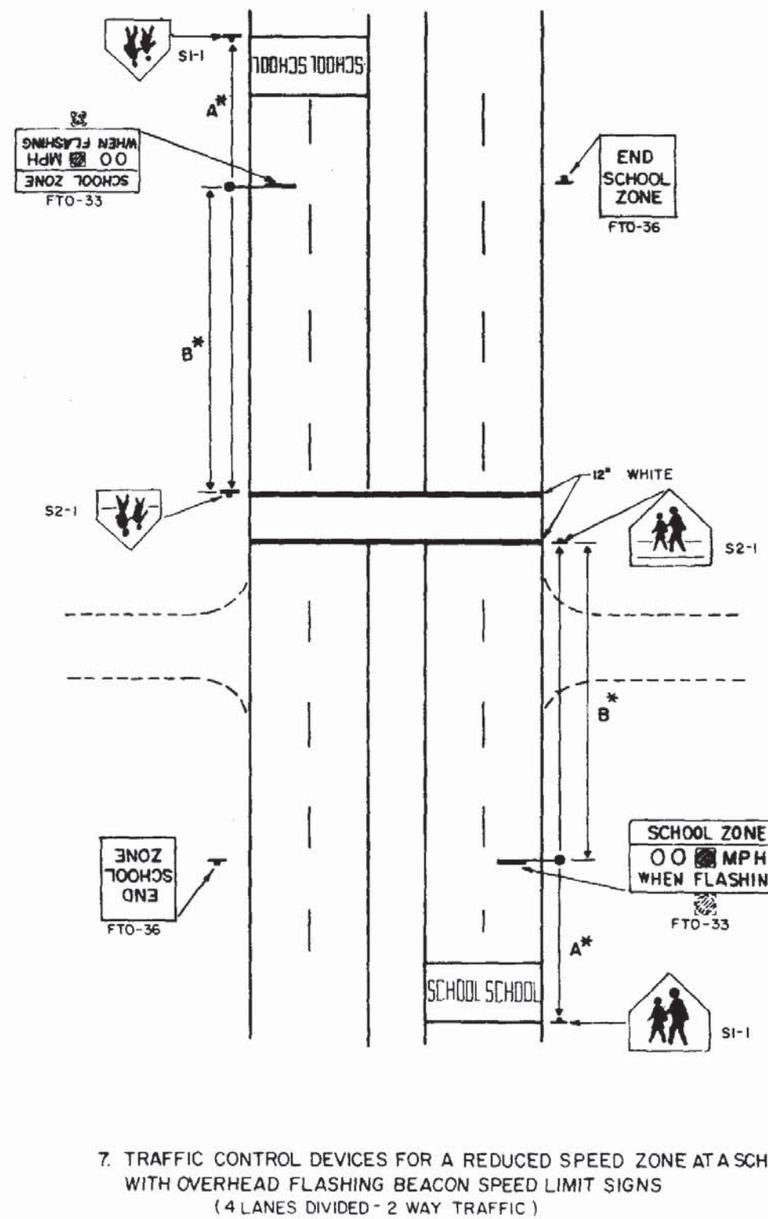

7. TRAFFIC CONTROL DEVICES FOR A REDUCED SPEED ZONE AT A SCHOOL CROSSWALK
WITH OVERHEAD FLASHING BEACON SPEED LIMIT SIGNS
(4 LANES DIVIDED - 2 WAY TRAFFIC)

APPROACH SPEED MPH	SUGGESTED DISTANCE IN FEET A	B
25 TO 35	275	50
36 TO 45	350	65
46 TO 55	500	80

A* & B* DISTANCES SHALL BE INCREASED BY ADDING THE INTERSECTING STREET WIDTH (CURB RETURNS INCLUDED) TO DIMENSIONS GIVEN IN TABLE.

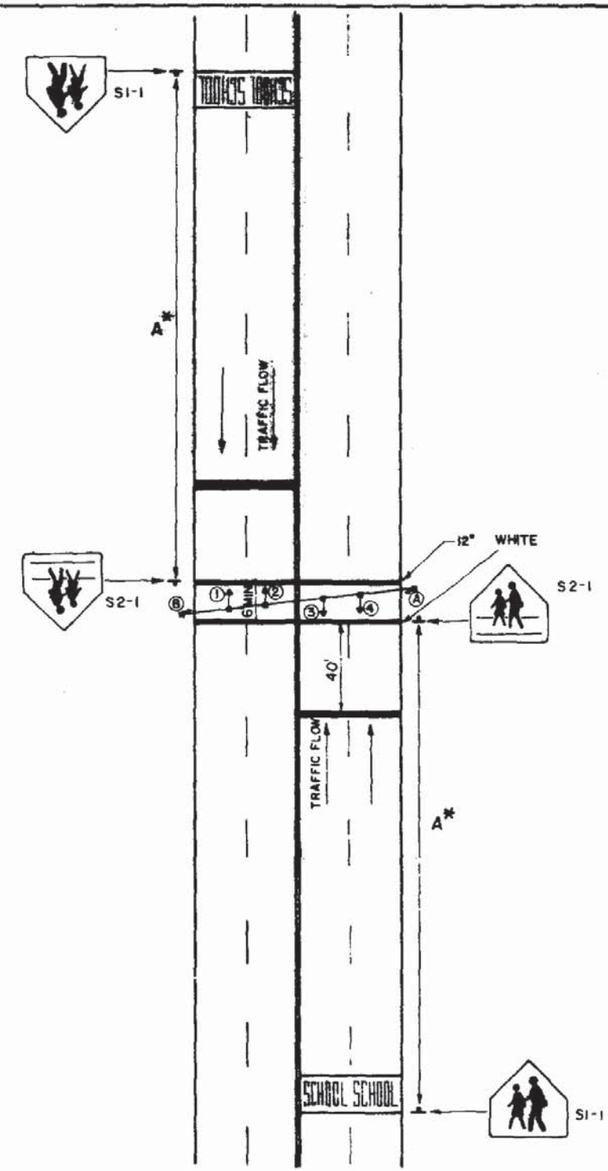

8. TRAFFIC CONTROL DEVICES FOR SIGNALIZED MIDBLOCK
SCHOOL CROSSWALK

FLORIDA DEPARTMENT OF TRANSPORTATION
TRAFFIC DESIGN
SCHOOL SIGNS & MARKINGS

REVISIONS				INITIALS	DATES	
DATE	BY	DESCRIPTION	Detailed by	CEJ	7-76	Approved by
7-10	RB	REVISED PAVEMENT ON	Checked by	KR	7-76	STATE DESIGN ENGINEER-RDWY
9-78	SWR	Changed crosswalk dimensions	Quantities by			
9-79	JMC	Deleted Florida Statute	Checked by			
8-80	K H	Deleted Educational Plaques	Supervised by			DRAWING NO 3 of 6 / INDEX NO 17344

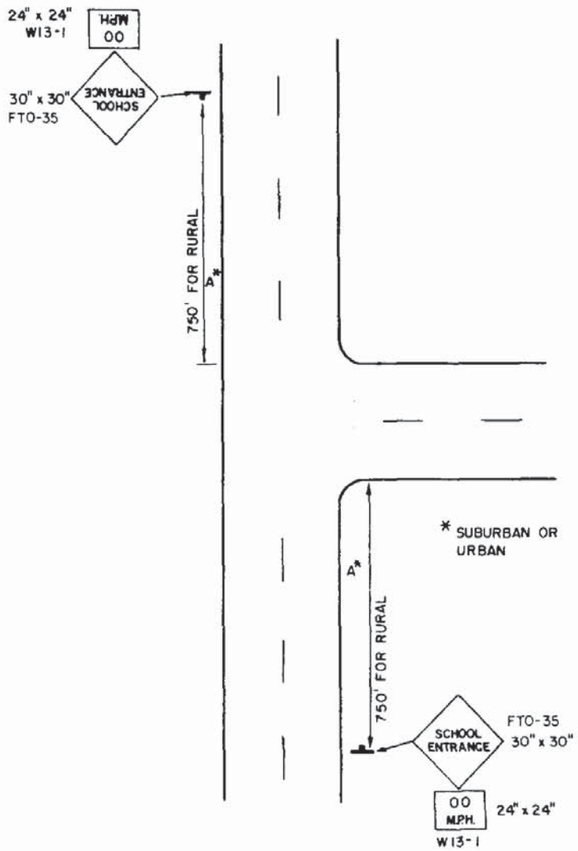

9. TRAFFIC CONTROL DEVICES AT SCHOOL ENTRANCES WHERE THERE ARE LITTLE OR NO WALKING STUDENTS

These Signs Are Intended For Use Only At Those Few Locations Where The School Entrance Is Not Evident To The Motorist, And Must Be Approved In Advance By The Responsible Traffic Engineering Authority.

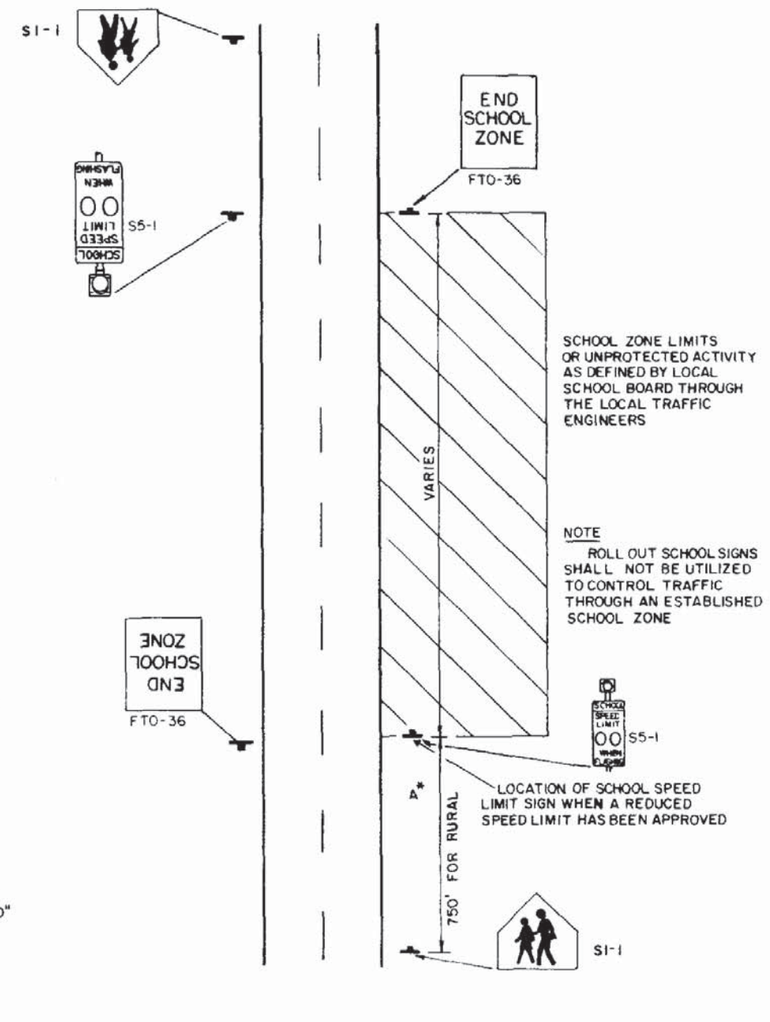

10. TRAFFIC CONTROL DEVICES FOR A TYPICAL SCHOOL ZONE FRONTING THE SCHOOL PROPERTY

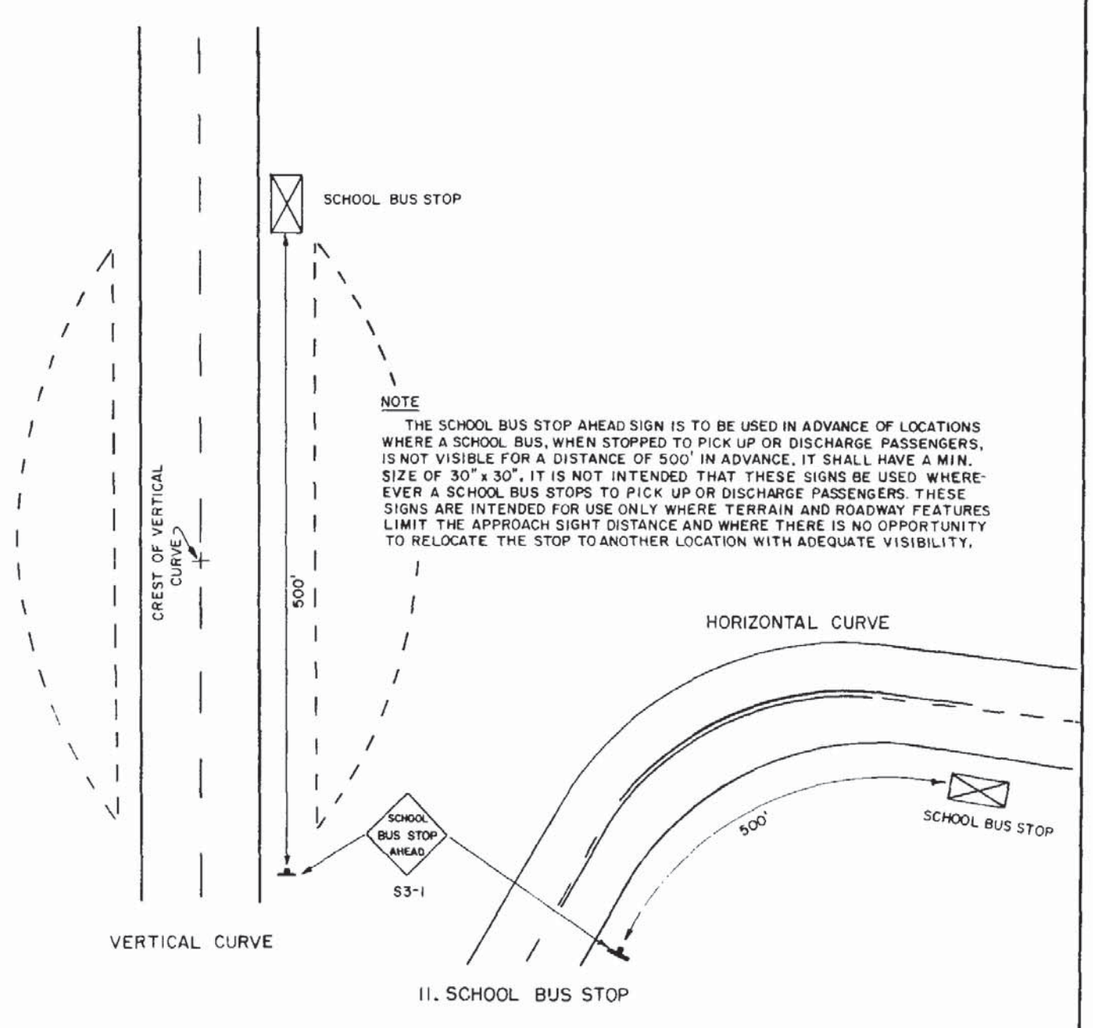

11. SCHOOL BUS STOP

FLORIDA DEPARTMENT OF TRANSPORTATION
TRAFFIC DESIGN
SCHOOL SIGNS & MARKINGS

REVISIONS				INITIALS	DATES	
DATE	BY	DESCRIPTION	Detailed by	CEJ	7-76	Approved by
9-5-79	JMC	Deleted Florida Statute	Checked by	KR	7-76	
8-80	K.H.	Deleted Educational Plaque	Quantities by			STATE DESIGN ENGINEER-ROWY
			Checked by			
			Supervised by			DRAWING NO 4 OF 6 / INDEX NO 17344

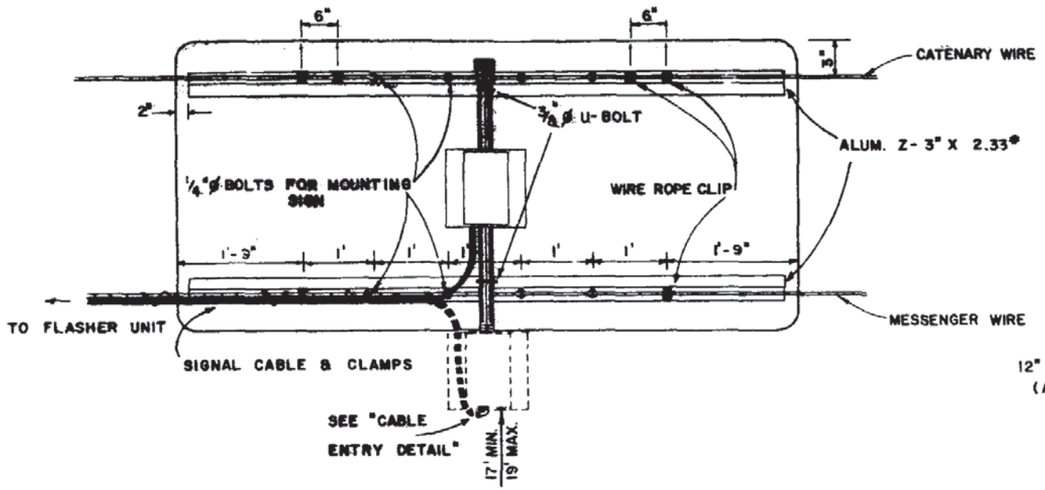

REAR VIEW

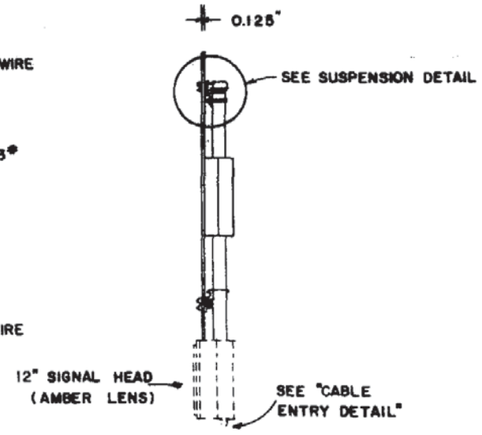

SIDE VIEW

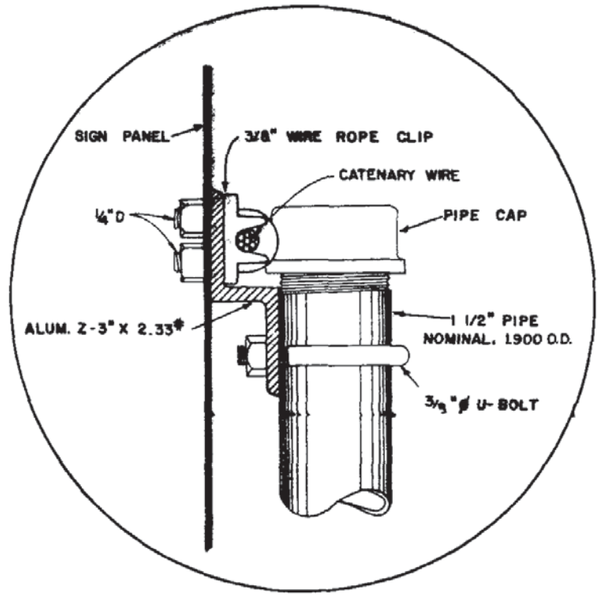

SUSPENSION DETAIL

FLASHER UNIT AND CABINET TO BE PLACED ON THE STRAIN POLE SUPPORTING OVERHEAD SIGN ASSEMBLY OR ON SERVICE POLE. THE FLASHER UNIT NOT TO OVERHANG PRIVATE PROPERTY OR SIDEWALK.

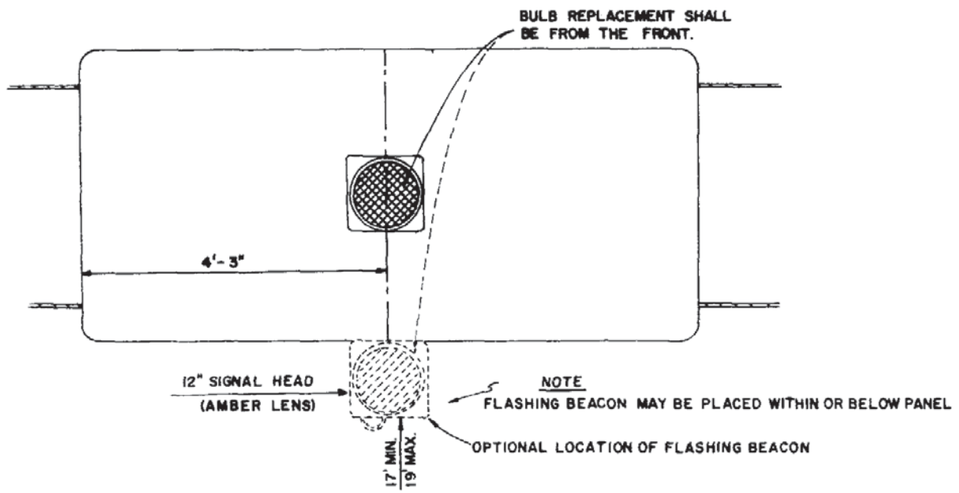

FRONT VIEW

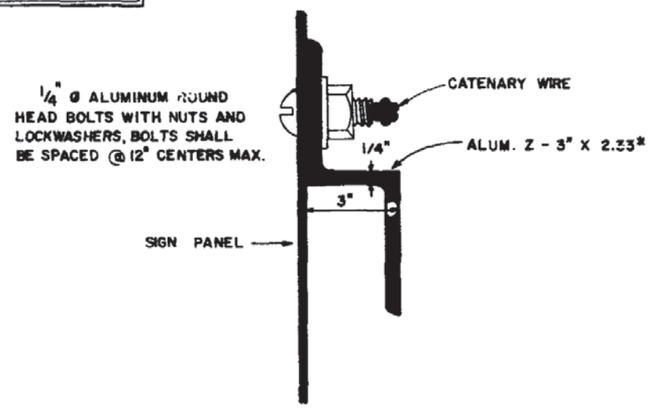

Z SECTION DETAIL

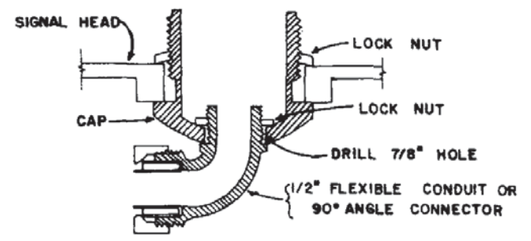

CABLE ENTRY DETAIL

REVISIONS		
DATE	BY	DESCRIPTION
9-79	J.M.C.	Deleted Florida Statute
8-80	K.H.	Revise Details

FLORIDA DEPARTMENT OF TRANSPORTATION
TRAFFIC DESIGN

SCHOOL SIGNS & MARKINGS

	INITIALS	DATES
DETAILED BY	CEJ	7-76
CHECKED BY	KR	7-76
QUANTITIES BY		
CHECKED BY		
SUPERVISED BY		

Approved by _____
STATE DESIGN ENGINEER-RDWY

DRAWING NO. 5 of 6

INDEX NO. 17344

SPEED LIMIT ASSEMBLY

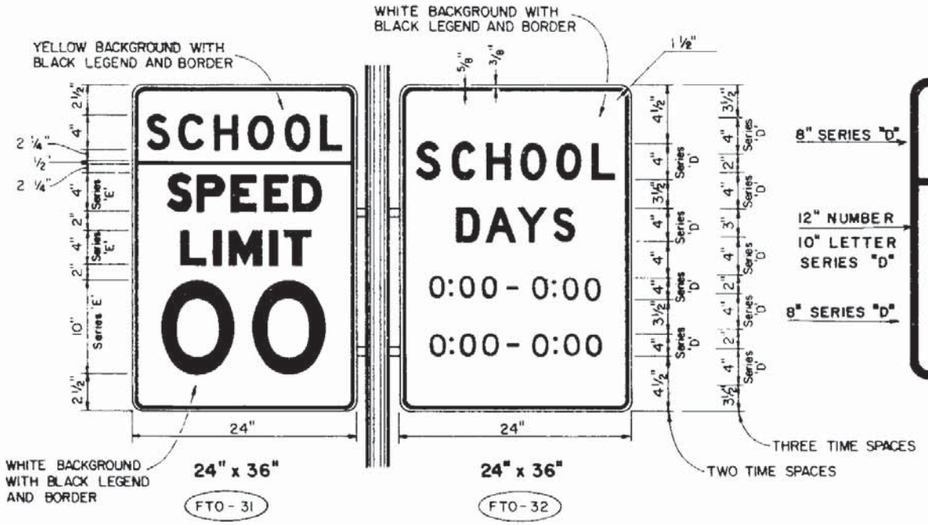

24" x 36"
FTO-31

24" x 36"
FTO-32

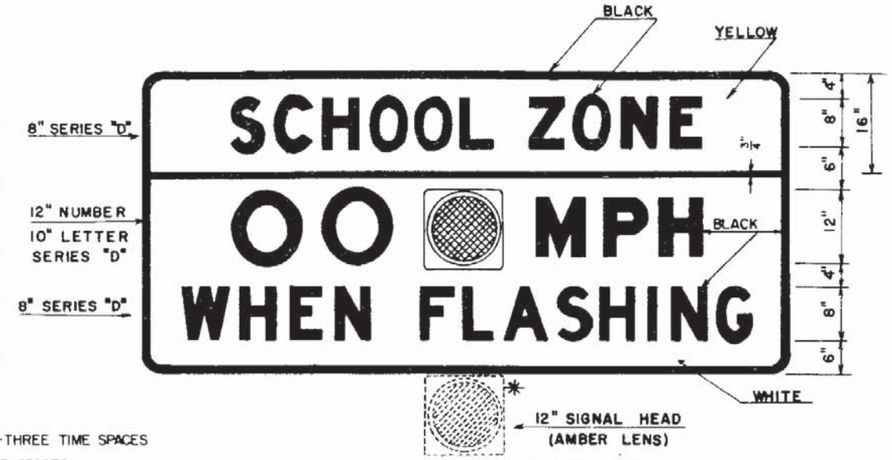

4'-0" X 8'-6" FTO-33
1¼" BORDER - 2¼" RAD.

OVERHEAD STANDARD



4'-0" x 8'-6" FTO-34
1¼" BORDER - 2¼" RAD.
BLACK ON WHITE

NOTES:

1. ALL SIGNS SHALL BE REFLECTORIZED.
2. STANDARD SIZE SIGNS SHOULD BE USED WHENEVER POSSIBLE. MINIMUM SIZES MAY BE USED ONLY ON LOW VOLUME, LOW SPEED (LESS THAN 35 M.P.H.) STREETS. SPECIAL SIZES SHOULD BE USED ON EXPRESSWAY FACILITIES WHERE SPECIAL EMPHASIS IS NEEDED.
3. THE VALUE OF THE ACTUAL SCHOOL ZONE SPEED LIMIT SHALL BE DETERMINED BY THE DISTRICT TRAFFIC OPERATIONS ENGINEER IN COOPERATION WITH LOCAL SCHOOL SUPERINTENDENTS. IN NO CASE SHALL IT BE LESS THAN THE 15 M.P.H. MIN. SET BY LAW.

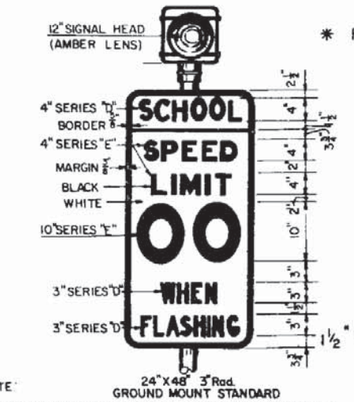

24" x 48" 3" Rad.
GROUND MOUNT STANDARD

NOTE:
EXISTING SCHOOL SPEED LIMIT SIGNS (GROUND MOUNT) UTILIZING A SINGLE 8" MIN. SIZE BEACON OR TWO 6" MIN. SIZE BEACONS INSIDE THE SIGN BORDER ARE CONSIDERED AS MEETING THE STANDARD. HOWEVER REPLACEMENT OR UPGRADING OF THESE SCHOOL SPEED LIMIT SIGNS SHALL CONFORM TO THE ABOVE STANDARD. NUMERICAL SPEED LIMIT DISPLAYED SHALL BE ESTABLISHED BY APPROPRIATE REGULATORY AUTHORITIES.

* FLASHING BEACON MAY BE PLACED WITHIN OR BELOW PANEL

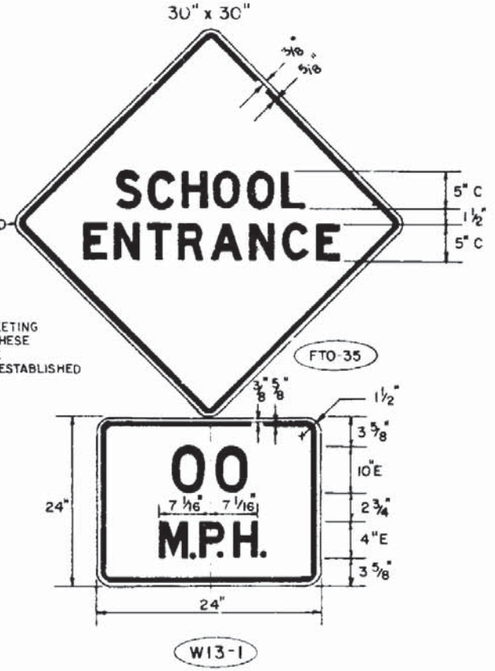

FTO-35

W13-1

COLOR - BLACK ON REFL. YELLOW BACKGROUND

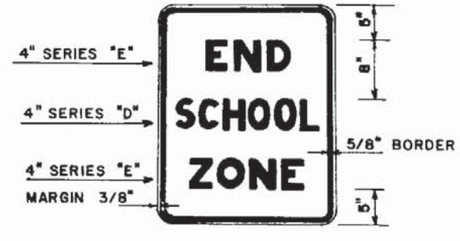

24" x 30"
BLACK ON WHITE
1-1/2" RAD.
RSS-10-7
FTO-36

NOTE
ALL SIGNS SHALL BE REFLECTORIZED

REVISIONS		
DATE	INITIALS	DESCRIPTION
8-8-79	J.M.C.	Deleted Florida Statute
8-80	K H	Deleted Ground Mount Standard
9-9-81	R.L.	Added Note

FLORIDA DEPARTMENT OF TRANSPORTATION
TRAFFIC DESIGN
SCHOOL SIGNS & MARKINGS

	INITIALS	DATES
DETAILED BY	CEJ	7-76
CHECKED BY	KR	7-76
QUANTITIES BY		
CHECKED BY		
SUPERVISED BY		

Approved by _____
STATE DESIGN ENGINEER-RDWY

DRAWING NO. 6 of 6
INDEX NO. 17344

MARKINGS FOR LEFT OFF-RAMPS

THE LEFT EDGE LINE (YELLOW) WILL BE CONTINUOUS FROM THE MAIN LINE DOWN THE RAMP TO CROSS ROAD THE MAIN LINE LEFT EDGE LINE (YELLOW) WILL START AGAIN AT THE PHYSICAL GORE WHICH IS THE END OF 8" LINE USED IN GORE DELINEATION

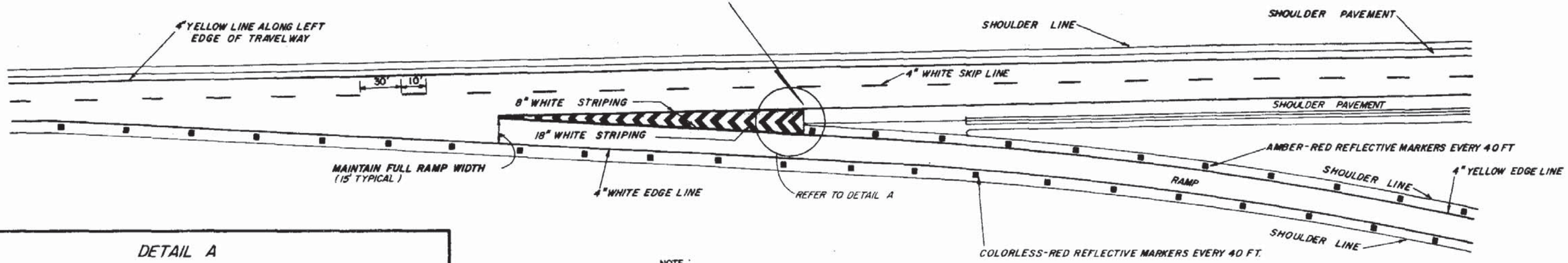

NOTE :

REFLECTIVE PAVEMENT MARKERS ARE INSTALLED ON THE THERMOPLASTIC EDGELINE.

NORMAL TAPERED EXIT

(TWO THRU LANES)

DETAIL A

COLORLESS-RED REFLECTIVE PAVEMENT MARKERS TO BE PLACED ON EVERY STRIPE BEGINNING AT NOSE.

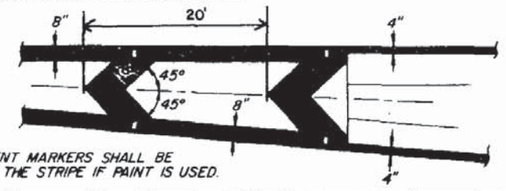

REFLECTIVE PAVEMENT MARKERS SHALL BE PLACED OUTSIDE OF THE STRIPE IF PAINT IS USED.

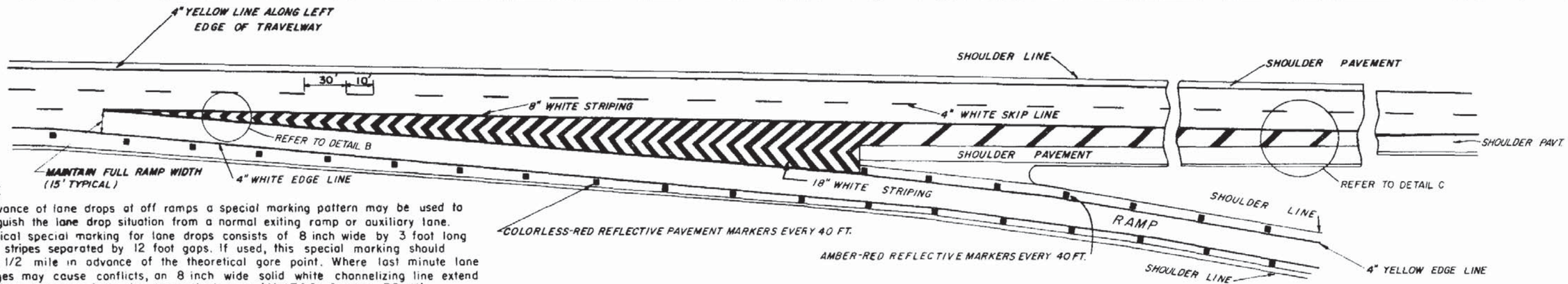

NOTE

In advance of lane drops at off ramps a special marking pattern may be used to distinguish the lane drop situation from a normal exiting ramp or auxiliary lane. A typical special marking for lane drops consists of 8 inch wide by 3 foot long white stripes separated by 12 foot gaps. If used, this special marking should begin 1/2 mile in advance of the theoretical gore point. Where last minute lane changes may cause conflicts, an 8 inch wide solid white channelizing line extend 300 feet upstream from the theoretical gore. (M.U.T.C.D. Section 3B-11)

NORMAL TAPERED EXIT ONLY

(TWO THRU LANES-THREE APPROACH LANES)

DETAIL B

COLORLESS-RED REFLECTIVE PAVEMENT MARKERS TO BE PLACED ON EVERY STRIPE BEGINNING AT NOSE

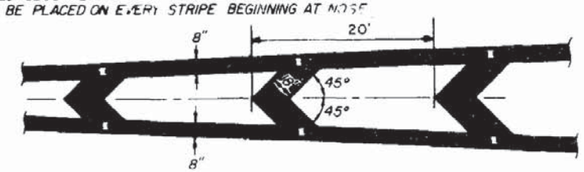

REFLECTIVE PAVEMENT MARKERS SHALL BE PLACED OUTSIDE OF THE STRIPE IF PAINT IS USED.

DETAIL C

"S"	30	35	40	45	50	55
"X"	20'	20'	40'	40'	60'	60'

PASSENGER CAR, DAYTIME, POSTED SPEEDS OR 85th PERCENTILE (USE HIGHER VALUE)

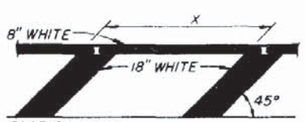

EDGE OF PAVT

REVISIONS		
DATE	INITIALS	DESCRIPTIONS
7-12-78	PB	REVISED NOTES & TITLE BLOCK
8-80	KH	REVISED DETAILS
9-9-81	RL	ADDED NOTE

STATE OF FLORIDA DEPARTMENT OF TRANSPORTATION
TRAFFIC DESIGN

INTERCHANGE MARKINGS

	INITIALS	DATES
DETAILED BY		
CHECKED BY		
QUANTITIES BY		
CHECKED BY		
SUPERVISED BY		

Approved by _____
STATE DESIGN ENGINEER - RDWY

Drawing No. 1 OF 4

Index No. 17345

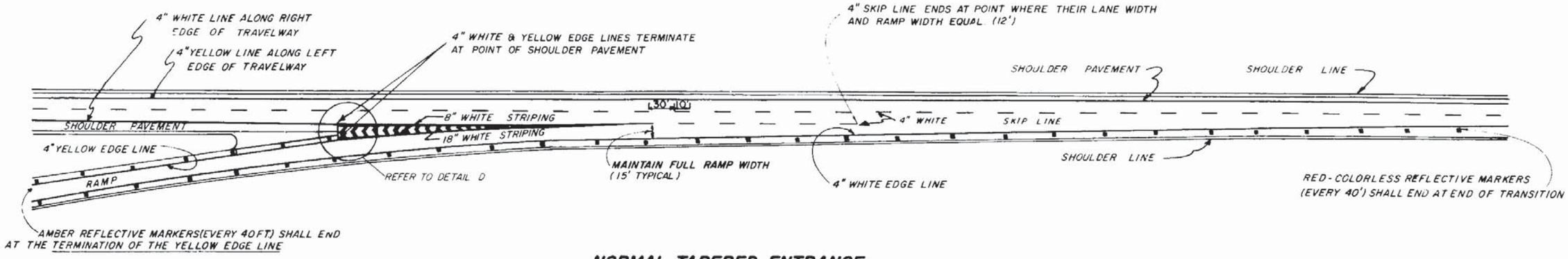

NORMAL TAPERED ENTRANCE

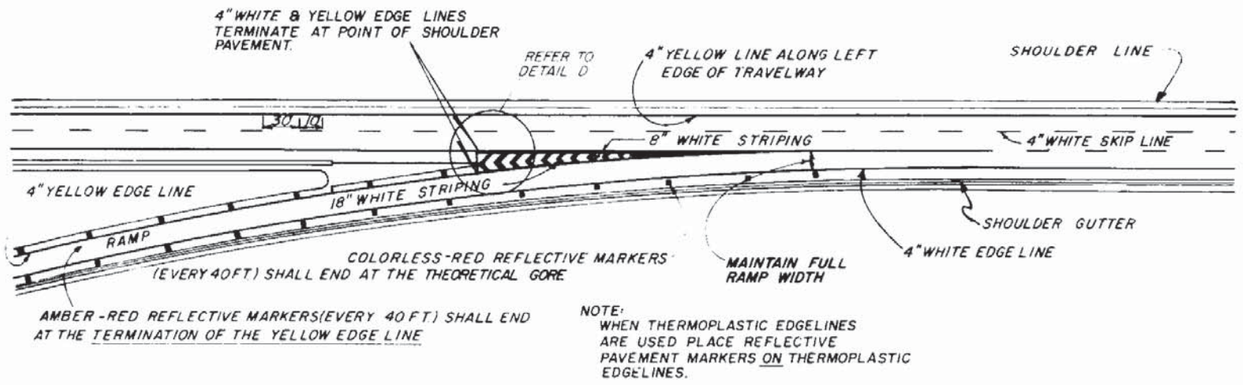

NOTE:
WHEN THERMOPLASTIC EDGELINES ARE USED PLACE REFLECTIVE PAVEMENT MARKERS ON THERMOPLASTIC EDGELINES.

NORMAL TAPERED ENTRANCE WITH ADDED LANE

DETAIL D

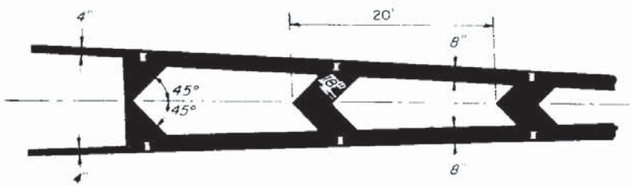

COLORLESS-RED REFLECTIVE PAVEMENT MARKERS TO BE PLACED ON EVERY STRIPE BEGINNING AT NOSE.

REFLECTIVE PAVEMENT MARKERS SHALL BE PLACED OUTSIDE OF THE STRIPE IF PAINT IS USED.

REVISIONS		
DATE	INITIALS	DESCRIPTIONS
7-11-78	PB	REVISED NOTES & CHANGED TITLE BLOCK
9-7-79	J.M.C.	REVISED 10ft DIMENSION
9-80	K.H.	REMOVE DETAIL & REVISE DRAWINGS

FLORIDA DEPARTMENT OF TRANSPORTATION
TRAFFIC DESIGN

INTERCHANGE MARKINGS

	INITIALS	DATES
DETAILED BY		
CHECKED BY		
QUANTITIES BY		
CHECKED BY	K.R.	
SUPERVISED BY		

Approved by _____
STATE DESIGN ENGINEER - RDWY

DRAWING NO. 2 OF 4 | INDEX NO. 17345

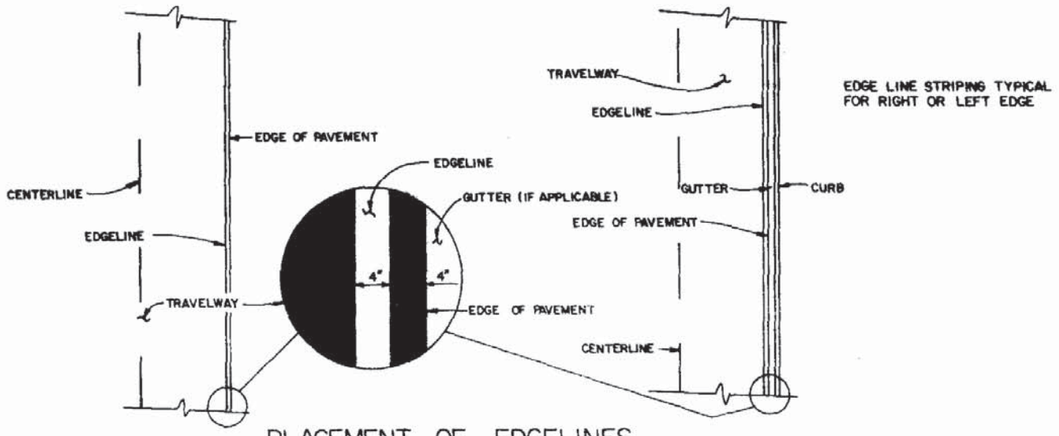

EDGE LINE STRIPING TYPICAL FOR RIGHT OR LEFT EDGE

PLACEMENT OF EDGELINES

DETAIL E

COLORLESS-RED REFLECTIVE PAVEMENT MARKERS TO BE PLACED ON EVERY STRIPE BEGINNING AT NOSE.

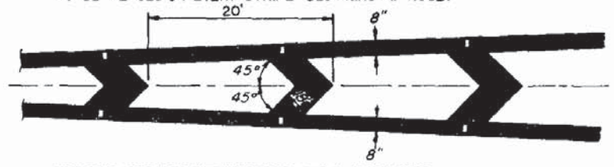

REFLECTIVE PAVEMENT MARKERS SHALL BE PLACED OUTSIDE OF THE STRIPE IF PAINT IS USED.

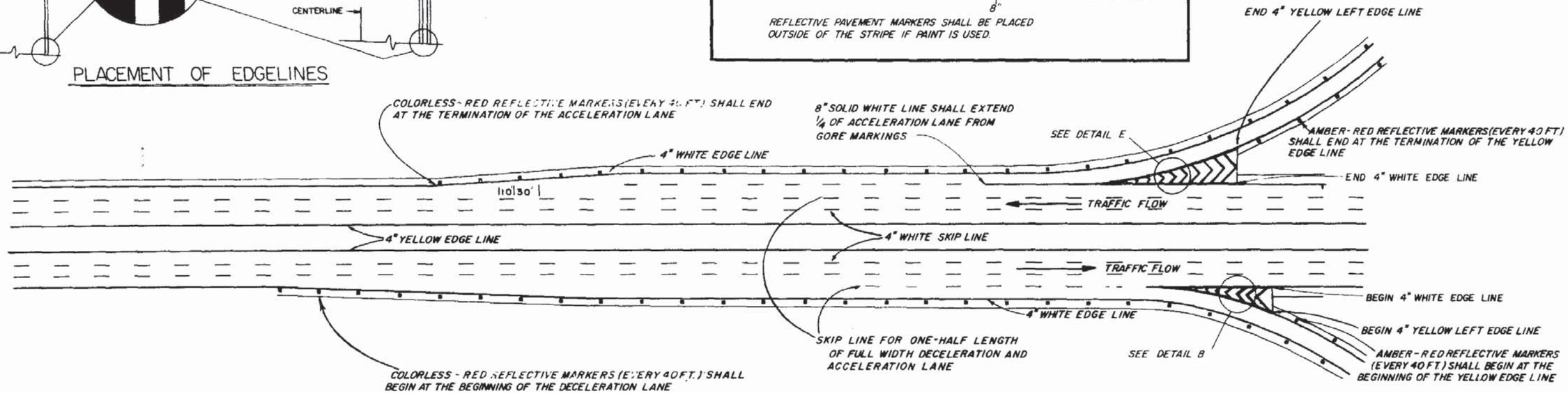

PARALLEL ACCELERATION AND DECELERATION LANE

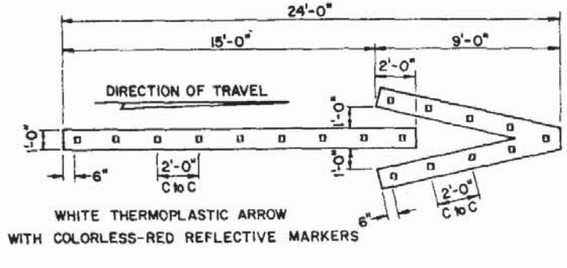

WHITE THERMOPLASTIC ARROW WITH COLORLESS-RED REFLECTIVE MARKERS

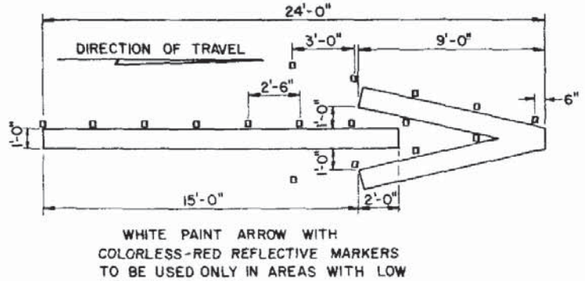

WHITE PAINT ARROW WITH COLORLESS-RED REFLECTIVE MARKERS TO BE USED ONLY IN AREAS WITH LOW TRAFFIC VOLUMES.

WRONG WAY ARROWS

REVISIONS		
DATE	INITIALS	DESCRIPTIONS
7-11-78	P.B.	REVISED NOTES & TITLE BLOCK
9-7-79	J.M.C.	REVISED 10ft. DIMENSION
8-80	K.H.	ARROW DETAIL ADDED
9-9-81	R.L.	ADD DETAIL

FLORIDA DEPARTMENT OF TRANSPORTATION
TRAFFIC DESIGN

INTERCHANGE MARKINGS

	INITIALS	DATES
DETAILED BY	W.R.B.	9-6-73
CHECKED BY	K.R.	
QUANTITIES BY		
CHECKED BY		
SUPERVISED BY		

Approved by
STATE DESIGN ENGINEER—RDWY

DRAWING NO. 3 OF 4

INDEX NO. 17345

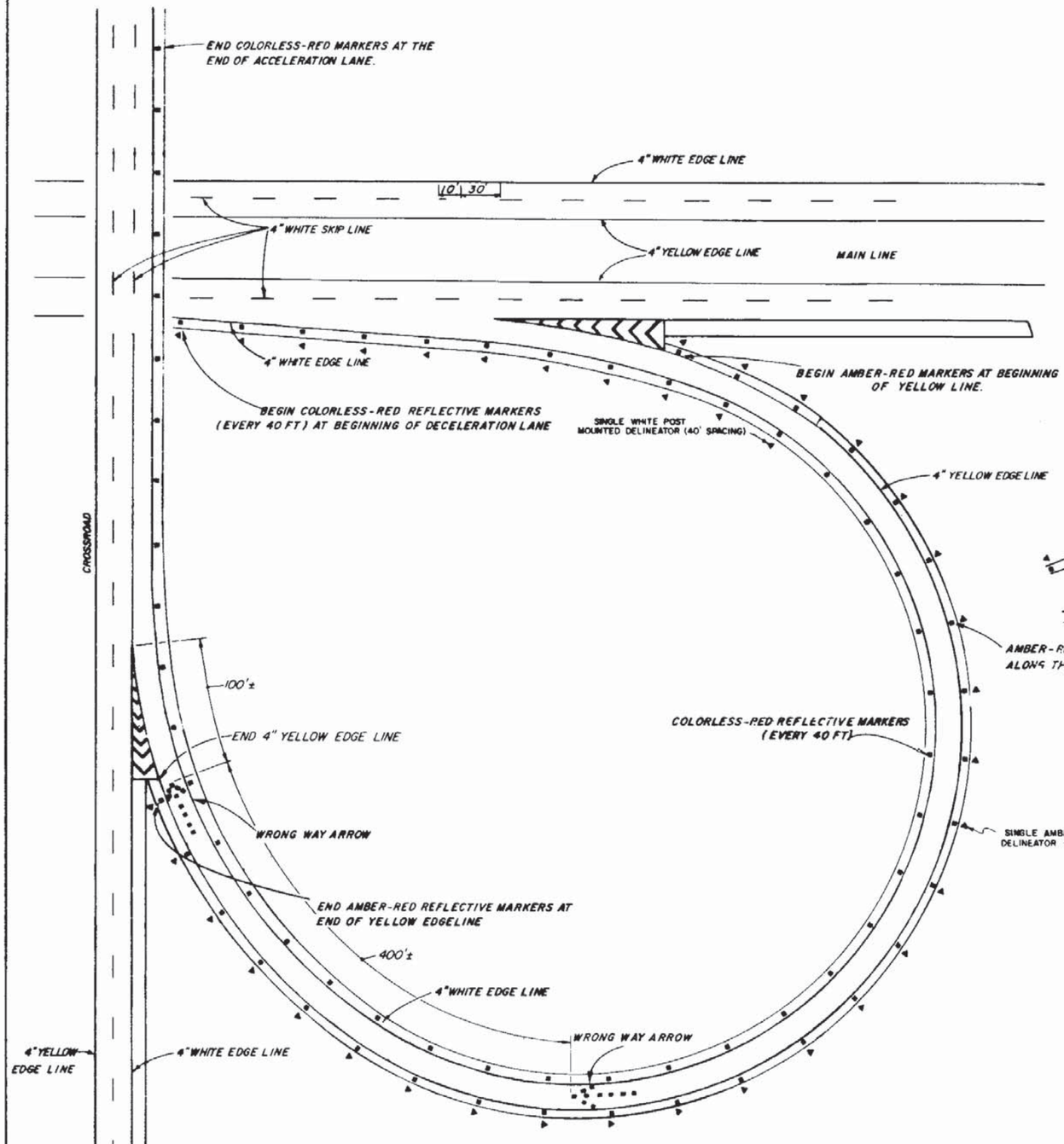

PLACEMENT OF REFLECTIVE PAVEMENT MARKERS AND DELINEATOR POSTS FOR LOOP RAMPS

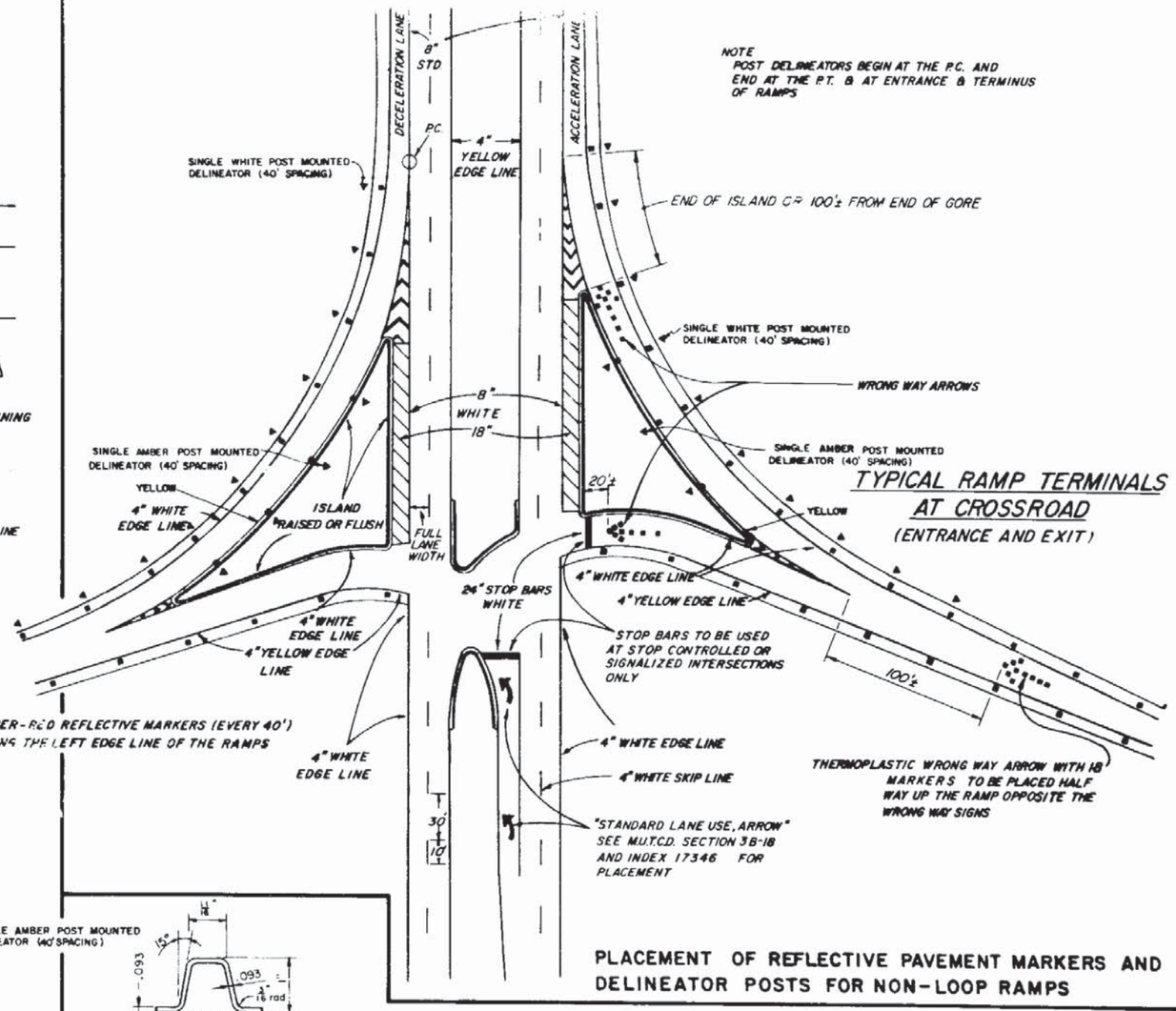

TYPICAL RAMP TERMINALS AT CROSSROAD
(ENTRANCE AND EXIT)

PLACEMENT OF REFLECTIVE PAVEMENT MARKERS AND DELINEATOR POSTS FOR NON-LOOP RAMPS

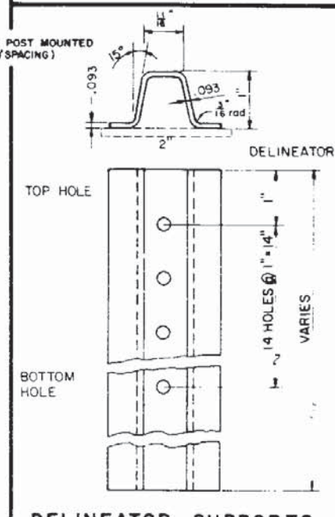

DELINEATOR SUPPORTS

GENERAL NOTES

MATERIAL STRESSES: ALL ALLOWABLE STRESSES ARE IN ACCORDANCE WITH STANDARD SPECIFICATIONS FOR STRUCTURAL SUPPORTS FOR HIGHWAY SIGNS, LUMINAIRES AND TRAFFIC SIGNALS. A.A.S.H.O. 1975.
STEEL: STRUCTURAL, INTERMEDIATE OR HARD GRADE, GALVANIZED.
APPROX. WEIGHT PER FOOT = 1.0 LB
ALUMINUM: ALLOY 6061-T6
HOLES: HOLES FOR 3/16" DIAMETER BOLTS ON ONE INCH CENTERS.
TOLERANCES: THICKNESS, ± 5%, DIMENSIONS ± 1/8".
LENGTH: IT SHALL BE THE CONTRACTORS RESPONSIBILITY TO DETERMINE THE LENGTH OF THE DELINEATOR SUPPORTS IN THE FIELD PRIOR TO FABRICATION.

REVISIONS	
DATE	DESCRIPTION
9-9-81	Added Note

REVISIONS	
Dates	Descriptions
9-77	[illegible] AT RAMP INTERSECTION
7-13-78 P.B.	GENERAL REVISIONS.
9-7-79	REVISED X ft DIMENSION
8-80	REMOVE DETAILS

FLORIDA DEPARTMENT OF TRANSPORTATION
TRAFFIC DESIGN

INTERCHANGE MARKINGS

	INITIALS	DATES
DETAILED BY	W.R.B.	9-6-73
CHECKED BY	K.R.	
QUANTITIES BY		
CHECKED BY		
SUPERVISED BY		

Approved by [signature]
STATE DESIGN ENGINEER—RDWY

DRAWING NO.	INDEX NO.
4 OF 4	17345

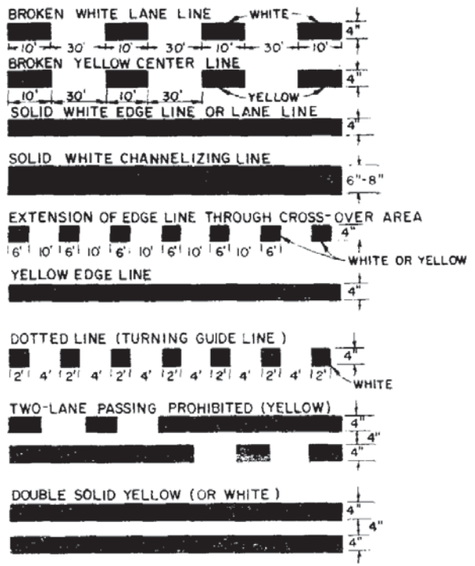

NOTE

FOR DETAILS ON TEMPORARY LINES SEE MANUAL ON TRAFFIC CONTROLS AND SAFE PRACTICES, FIGURE 2.19

BASIC COLOR RULE

WHITE LINES SEPARATE FLOWS IN THE SAME DIRECTION
YELLOW LINES SEPARATE FLOWS IN THE OPPOSITE DIRECTION

YELLOW DOTTED LINES SHALL BE PERMITTED IN SPECIAL CASES

TYPES OF PERMANENT LONGITUDINAL LINES

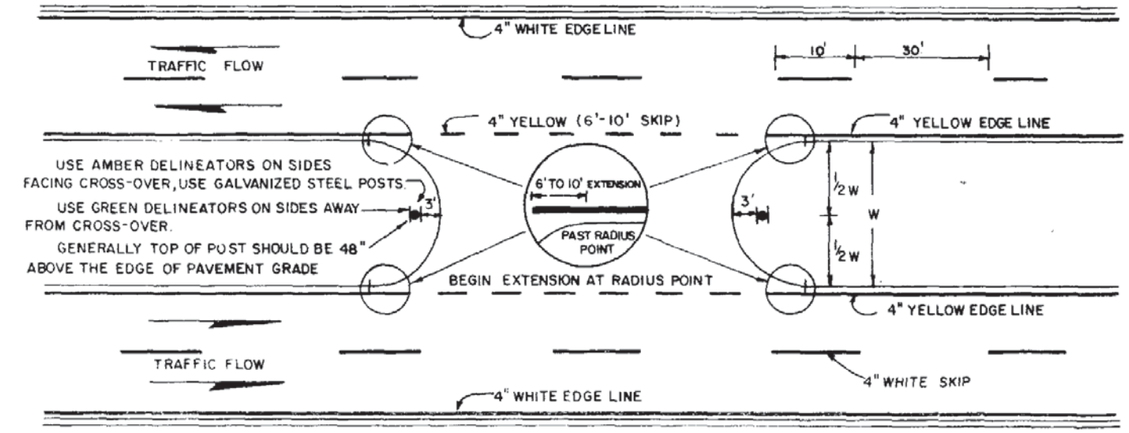

PAVEMENT MARKINGS AND DELINEATORS FOR MEDIAN CROSS-OVER

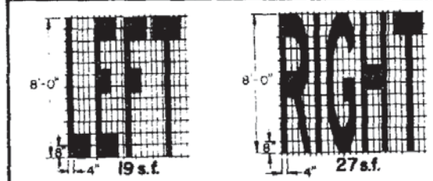

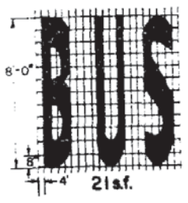

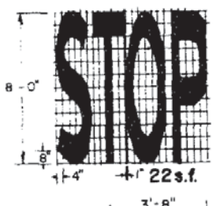

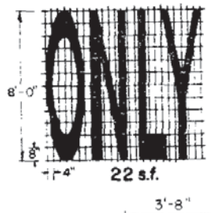

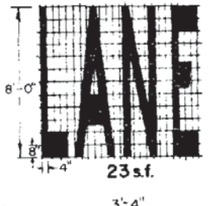

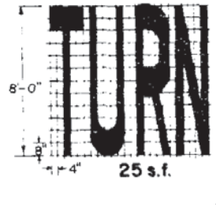



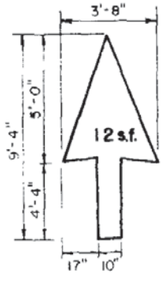

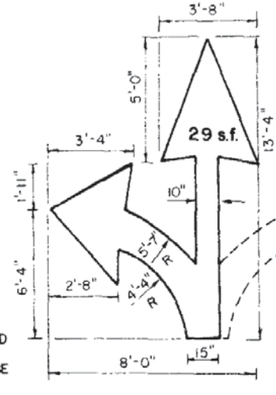

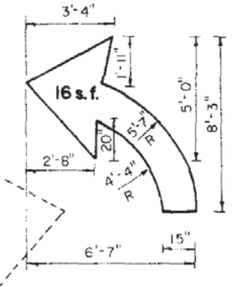

RIGHT TURN ARROW TO BE REVERSE

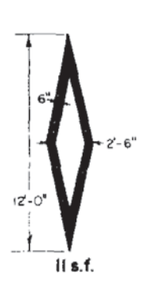

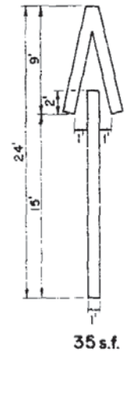

NOTE

WHEN ARROW AND PAVEMENT MESSAGE ARE USED TOGETHER, THE ARROW SHALL BE LOCATED DOWN-STREAM OF THE PAVEMENT MESSAGE AND SHALL BE SEPARATED FROM THE PAVEMENT MESSAGE BY A DISTANCE OF 25' (BASE OF THE ARROW TO THE BASE OF THE MESSAGE).

PAVEMENT ARROW AND MESSAGE DETAILS

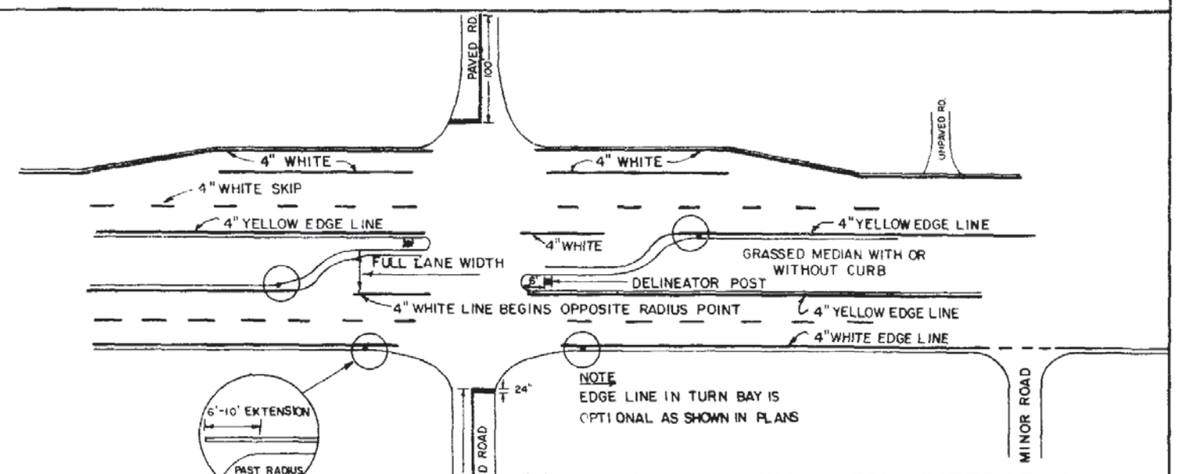

PAVEMENT MARKINGS FOR INTERSECTIONS WITH MAJOR AND MINOR ROADS

FLORIDA DEPARTMENT OF TRANSPORTATION
TRAFFIC DESIGN

SPECIAL MARKING AREAS

REVISIONS			INITIALS	DATES
Dates	Descriptions	Detailed by	S.W.R.	8-16-78
8-16-78	REDRAFTED	Checked by	K.R.	8-16-78
9-27-79	PAVT MESSAGES & ARROW ADDED INTERSECTION DETAIL ADDED.	Quantities by		
		Checked by		
8-80	REVISE MARKINGS FOR INTERSECTION	Supervised by	K R	
9-85	Removed Skip			

Approved by _____
STATE DESIGN ENGINEER - RDWY

DRAWING NO.	INDEX NO.
1 OF 8	17346

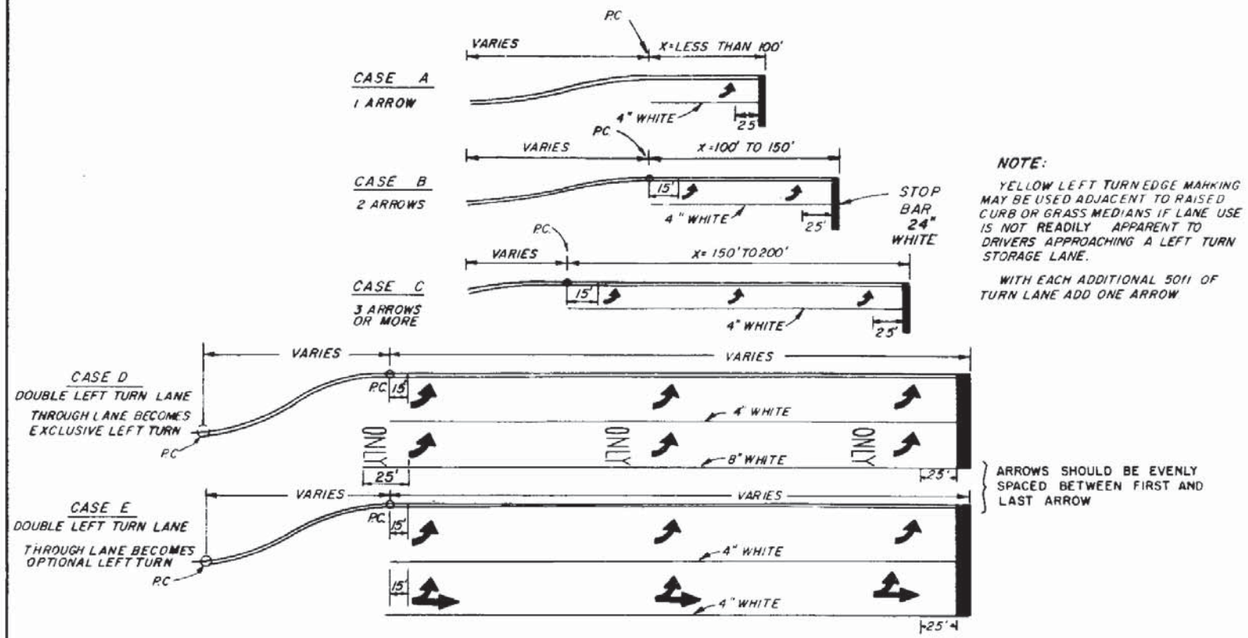

NOTE:

YELLOW LEFT TURN EDGE MARKING MAY BE USED ADJACENT TO RAISED CURB OR GRASS MEDIANS IF LANE USE IS NOT READILY APPARENT TO DRIVERS APPROACHING A LEFT TURN STORAGE LANE.

WITH EACH ADDITIONAL 50ft OF TURN LANE ADD ONE ARROW

ARROWS SHOULD BE EVENLY SPACED BETWEEN FIRST AND LAST ARROW

PAINTED LEFT TURN STORAGE LANE(S) DETAILS
FOR STOP CONTROLLED OR SIGNALIZED INTERSECTIONS

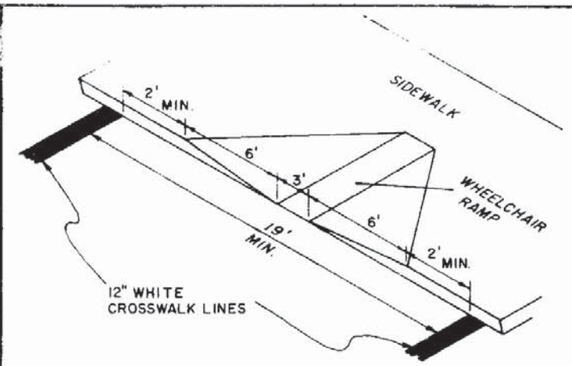

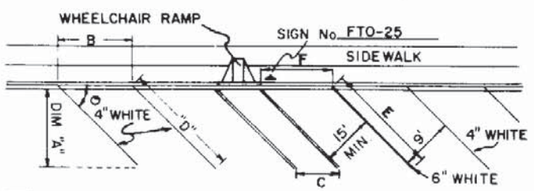

Δ°	DIM "A"	DIM "B"	DIM "C"	DIM "D"	DIM "E"	DIM "F"
45°	19'-1"	12'-9"	26'-10"	27'-0"	33'-0"	21'-3"
60°	20'-1"	10'-5"	21'-11"	23'-2"	26'-8"	17'-4"

NOTE
CRITERIA FOR PAVEMENT MARKINGS ONLY, NOT WHEELCHAIR RAMP LOCATIONS. FOR RAMP CRITERIA SEE ROADWAY DESIGN INDEX NO. 304.

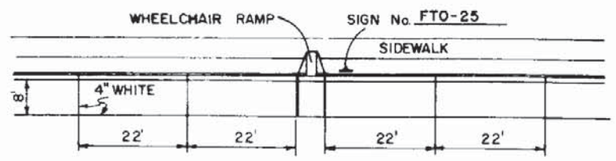

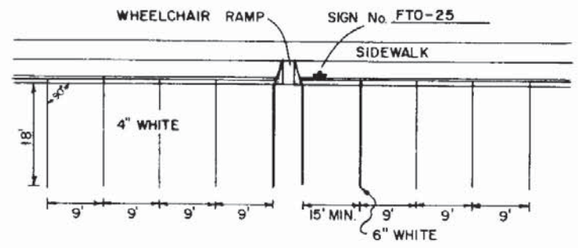

PAVEMENT MARKING FOR WHEELCHAIR RAMPS IN PARKING ZONES

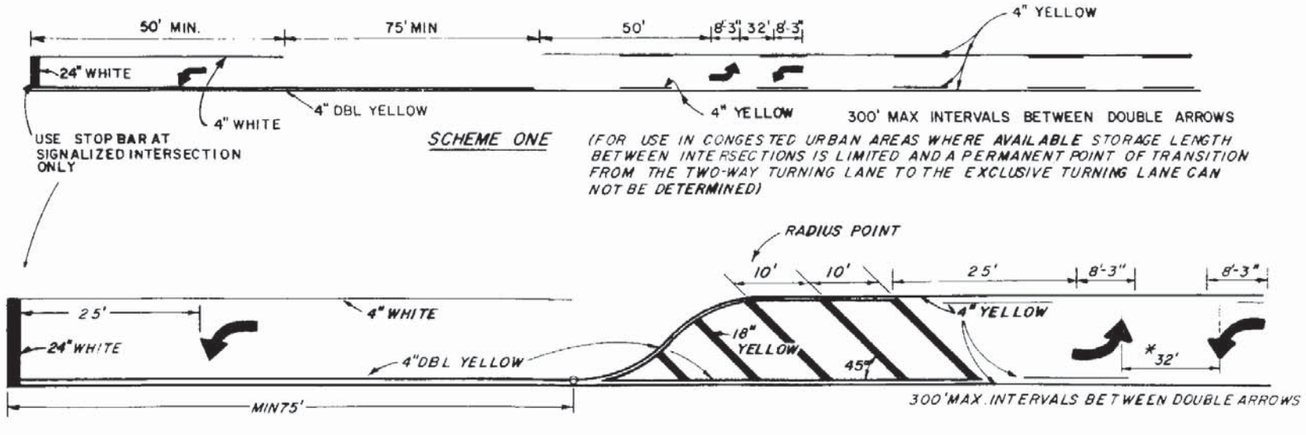

TWO WAY LEFT TURN LANE
(WITH SINGLE LANE LEFT TURN CHANNELIZATION)

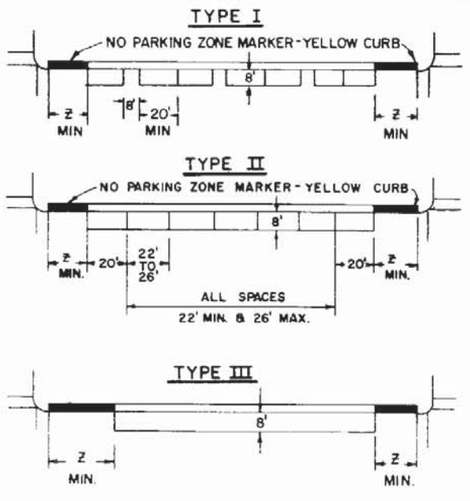

PARKING RESTRICTION DISTANCE TABLE	
SPEED LIMIT	Z*
30 MPH OR LESS	30 FT.
35 MPH OR MORE	50 FT.

* FOR ENTRANCES TO A ONE-WAY STREET, THE DOWNSTREAM Z DISTANCE MAY BE REDUCED TO 20 FEET.

ON STREET PARKING

NOTE:
1. ALL PARKING AND REFUGE LANE MARKINGS SHALL BE 4" WHITE
2. PARKING LANE LINES SHALL BE BROKEN AT DRIVEWAYS

Note:
For mid-block driveway clearance from parking stall to the drop curb shall be 20' min.

FLORIDA DEPARTMENT OF TRANSPORTATION
TRAFFIC DESIGN

SPECIAL MARKING AREAS

REVISIONS			INITIALS	DATES
Dates	Descriptions	Detailed by	TL	9-1-76
9-1-76	Redrafted	Checked by	KR	9-1-76
9-7-79	Added Note	Quantities by		
9-7-79	Changed Dimension	Checked by		
8-80	REVISE PAVT STRIPING	Supervised by		
9-85	Revised Cross Walk			

Approved by _____
STATE DESIGN ENGINEER - RDWY

DRAWING NO. 2 OF 8
INDEX NO. 17346

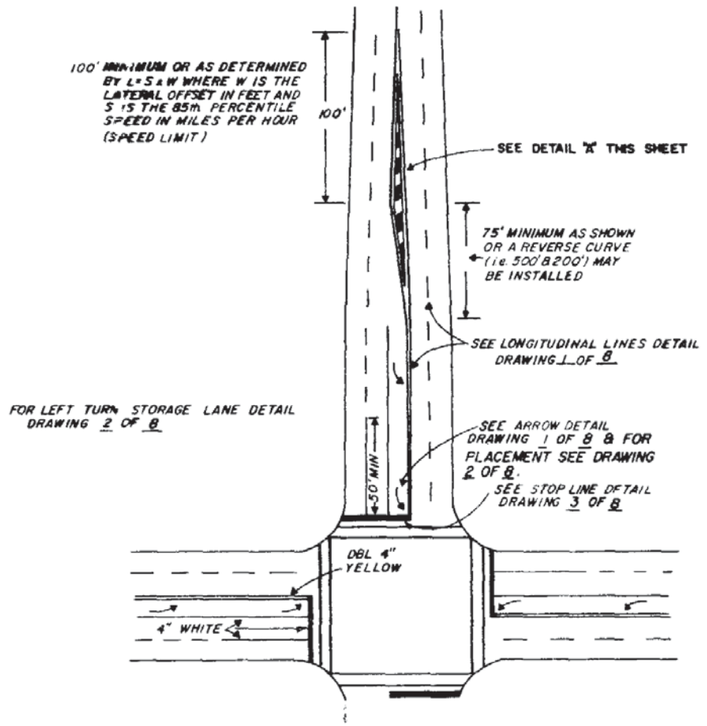

TYPICAL INTERSECTION 2 THRU LANES PLUS LEFT TURN LANE, WITH CROSSWALK

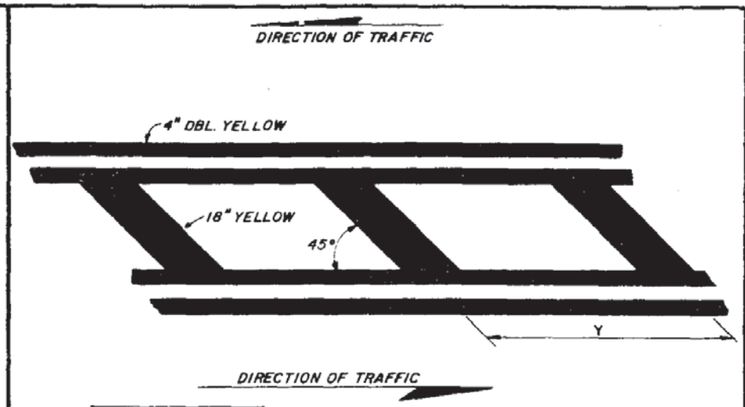

POSTED (DAY) SPEED LIMIT M.P.H	"Y" FT.
30 or LESS	10
35	20
40	20
45	30
50 or MORE	40

DETAIL "A"

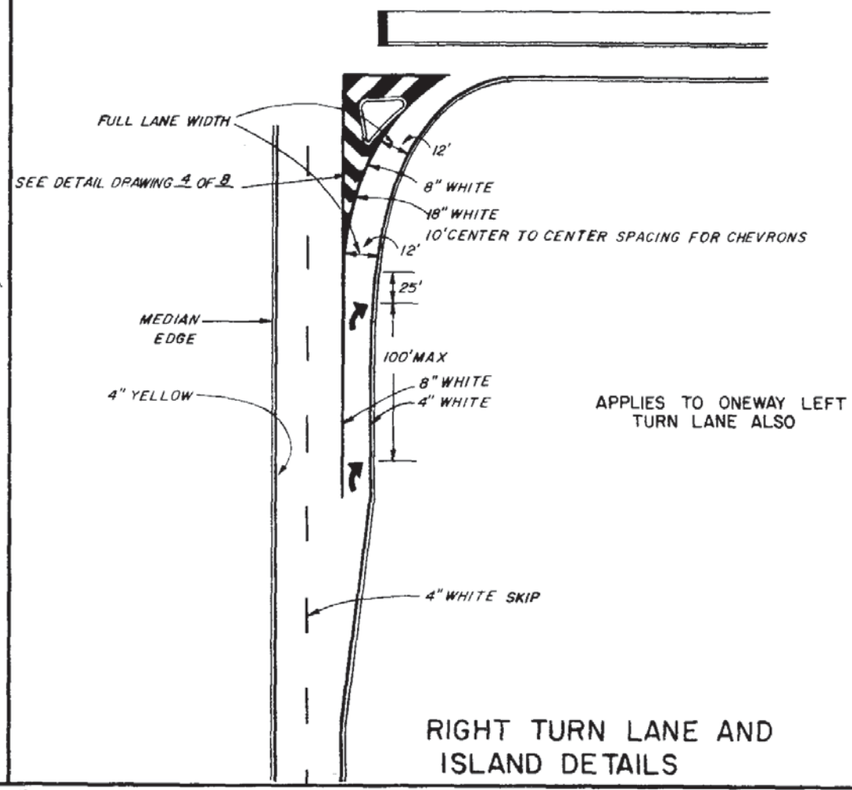

APPLIES TO ONEWAY LEFT TURN LANE ALSO

RIGHT TURN LANE AND ISLAND DETAILS

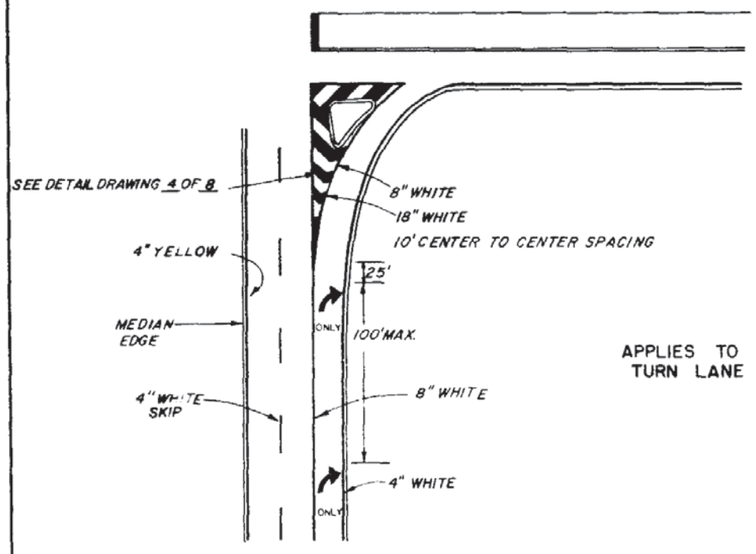

APPLIES TO ONEWAY LEFT TURN LANE DROPS ALSO

RIGHT TURN LANE DROP AND ISLAND DETAILS

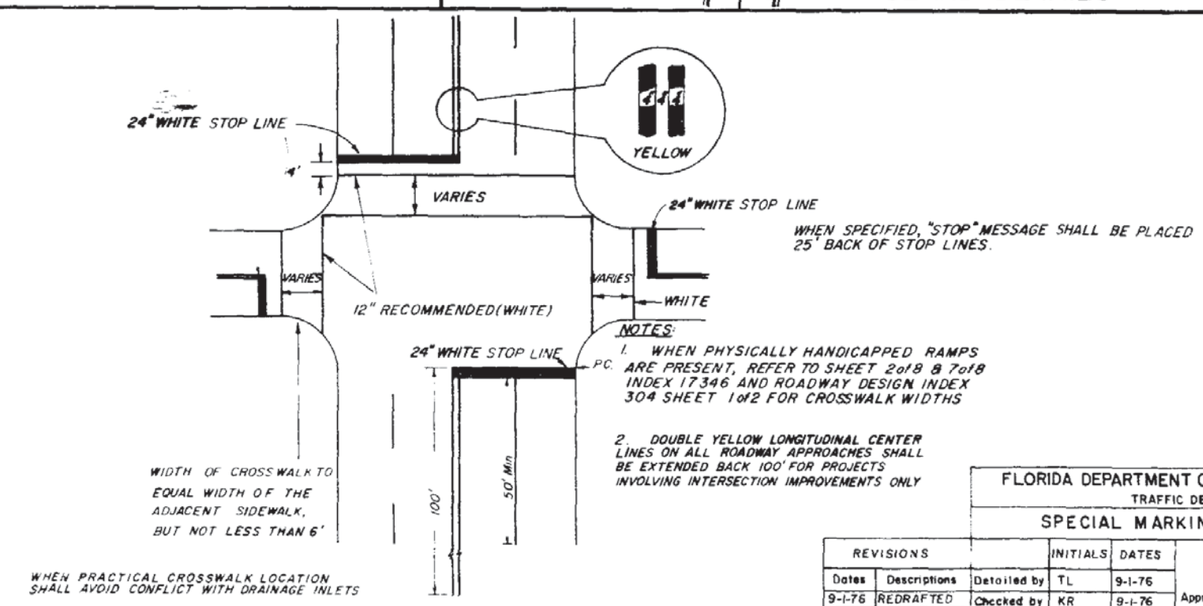

WHEN SPECIFIED, "STOP" MESSAGE SHALL BE PLACED 25' BACK OF STOP LINES.

NOTES:

1. WHEN PHYSICALLY HANDICAPPED RAMPS ARE PRESENT, REFER TO SHEET 2 of 8 & 7 of 8 INDEX 17346 AND ROADWAY DESIGN INDEX 304 SHEET 1 of 2 FOR CROSSWALK WIDTHS

2. DOUBLE YELLOW LONGITUDINAL CENTER LINES ON ALL ROADWAY APPROACHES SHALL BE EXTENDED BACK 100' FOR PROJECTS INVOLVING INTERSECTION IMPROVEMENTS ONLY

STOP BARS, CROSSWALKS AND DOUBLE CENTER LINES DETAILS

FLORIDA DEPARTMENT OF TRANSPORTATION
TRAFFIC DESIGN

SPECIAL MARKING AREAS

REVISIONS			INITIALS	DATES
Dates	Descriptions	Detailed by	TL	9-1-76
9-1-76	REDRAFTED	Checked by	KR	9-1-76
9-7-79	CHANGED Y/T DIMENSION	Quantities by		
8-80	ADDED DIMENSION, CHANGED NOTES	Checked by		
9-85	CHANGED 75 to 50	Supervised by	KR	

Approved by [signature]
STATE DESIGN ENGINEER - RDWY

DRAWING NO. 3 OF 8 | INDEX NO. 17346

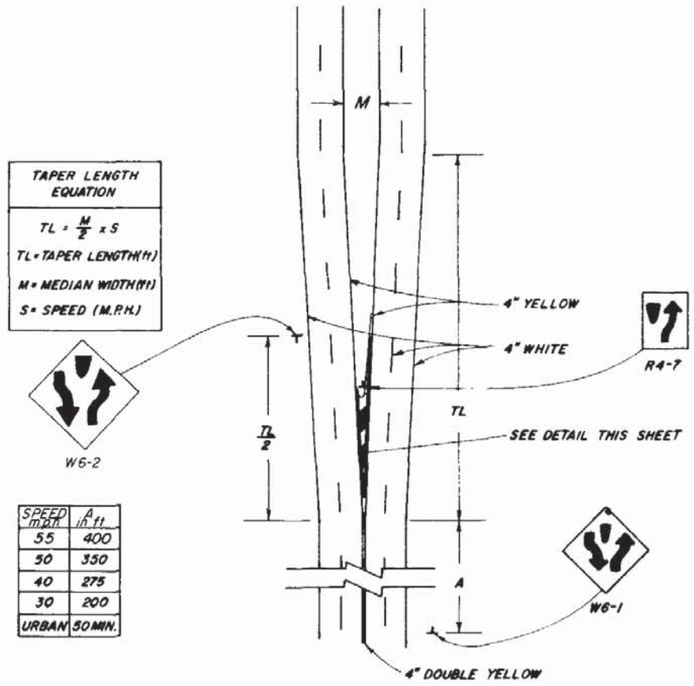

BEGINNING OF A DIVIDED HIGHWAY

POSTED (DAY) SPEED LIMIT M.P.H.	"X" FT.
25 OR LESS	10
30	20
35	20
40	40
45	40
50	60
55	60

TAPER LENGTH EQUATION
TL = 12S
TL = TAPER LENGTH (ft)
S = SPEED (m.p.h.)

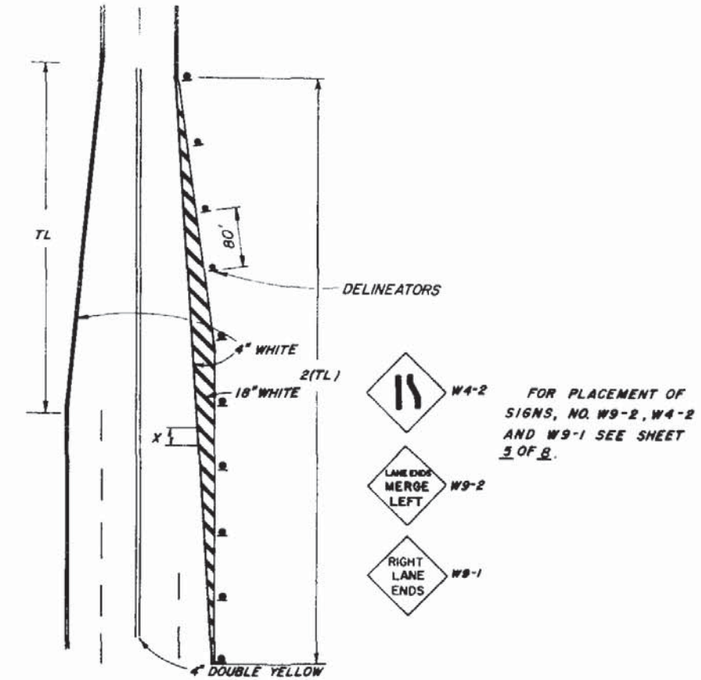

FOR PLACEMENT OF SIGNS, NO. W9-2, W4-2 AND W9-1 SEE SHEET 3 OF 8.

4-LANE-2-LANE TRANSITION-NO MEDIAN

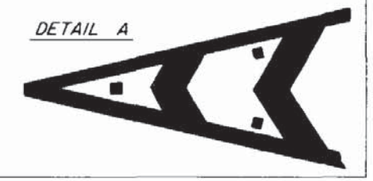

NOTE
RAISED PAVEMENT MARKERS SHALL BE SET IN THERMOPLASTIC AS SHOWN BELOW, OR SET TWO (2) INCHES INSIDE PAINTED LINE AS SHOWN IN DETAIL A

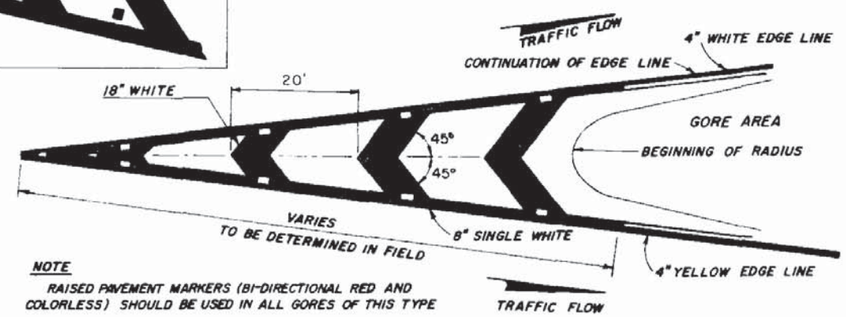

NOTE
RAISED PAVEMENT MARKERS (BI-DIRECTIONAL RED AND COLORLESS) SHOULD BE USED IN ALL GORES OF THIS TYPE

PAVEMENT MARKINGS FOR TRAFFIC CHANNELIZATION AT GORE
(TRAFFIC FLOWS IN SAME DIRECTION)

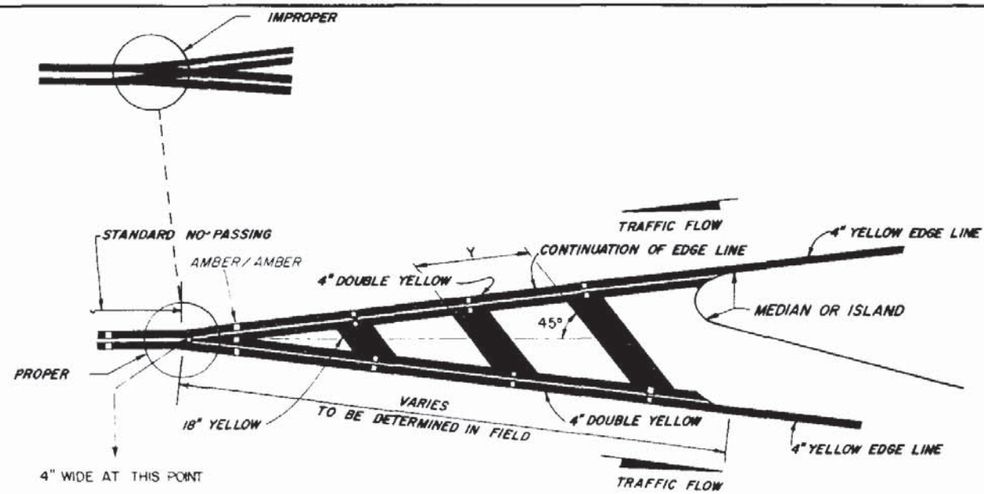

POSTED (DAY) SPEED LIMIT M.P.H.	"Y" FT.
30 OR LESS	10
35	20
40	20
45	30
50 OR MORE	40

PAVEMENT MARKING FOR TRAFFIC SEPARATION
(TRAFFIC FLOWS IN OPPOSITE DIRECTION)

FLORIDA DEPARTMENT OF TRANSPORTATION
TRAFFIC · DESIGN
SPECIAL MARKING AREAS

REVISIONS			INITIALS	DATES
Dates	Descriptions	Detailed by	SWR	8-19-78
8-19-78	Redrafted	Checked by	KR	8-19-78
8-80	Revise Details	Quantities by		
		Checked by		
		Supervised by		

Approved by [signature]
STATE DESIGN ENGINEER — RDWY

DRAWING NO.	INDEX NO.
4 OF 8	17346

SEVERE CASES MAY REQUIRE USE OF CONSTANT OR GRADUATED ADVISORY SPEED SIGNS (W13-1) PLACED BENEATH SIGNS W9-2, W4-2 AND W9-1. (APPLICABLE TO BOTH CASES SHOWN) FOR SLOW SPEED (UNDER 45 M.P.H.) LOCATIONS W9-1 AND W9-2 MAY BE OMITTED

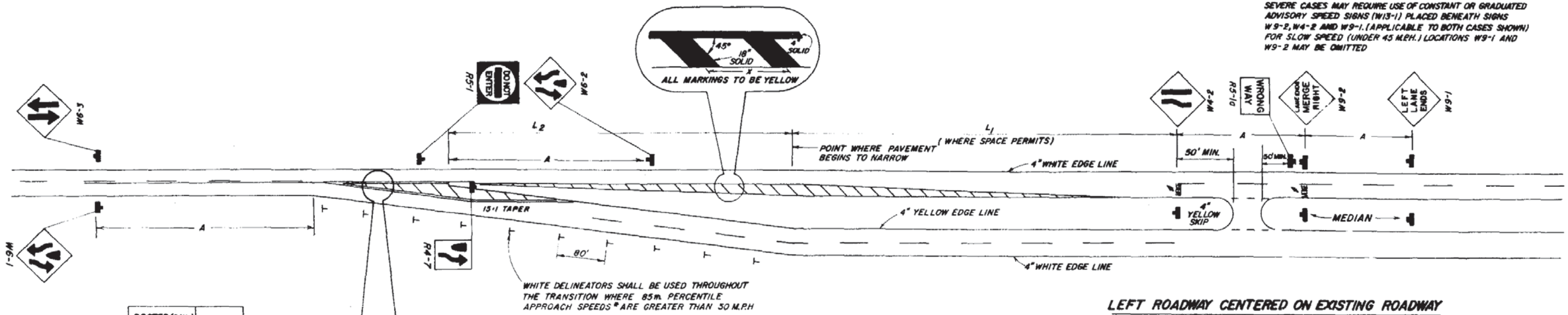

LEFT ROADWAY CENTERED ON EXISTING ROADWAY

RIGHT ROADWAY CENTERED ON EXISTING ROADWAY

POSTED (OAY) SPEED LIMIT M.P.H	"Y" FT.
30 OR LESS	10
35	20
40	20
45	30
50 OR MORE	40

TRANSITION DISTANCE L_1

* V \ W**	8	9	10	11	12	13	14	"X"
30	240	270	300	330	360	390	420	20
35	280	315	350	385	420	455	490	20
40	320	360	400	440	480	520	560	40
45	360	405	450	495	540	585	630	40
50	400	450	500	550	600	650	700	60
55	440	495	550	605	660	715	770	60
60	480	540	600	660	720	780	840	80
65	520	585	650	715	780	845	910	80
70	560	630	700	770	840	910	980	80

LATERAL OFFSET ($L_1 = S \times W$)

* PASSENGER CAR, DAYTIME, POSTED SPEEDS OR 85th. PERCENTILE (USE HIGHER VALUE)

** LATERAL OFFSET

PAVEMENT WIDTH TRANSITION (L_2)

ENDPOINTS OF L_2 ARE THE PHYSICAL NOSE AND POINT AT WHICH PAVED SURFACE BEGINS TO TAPER TO ONE LANE, ON NEWER ROADS L_2 WILL USUALLY BE SIMILAR TO L_1, BUT ON OLDER ROADS MAY BE MUCH LESS. FOR THE RIGHT ROADWAY L_2 BEGINS AT POINT WHERE PAVEMENT WIDTH BEGINS TO NARROW AND CONTINUES TO POINT OF UNIFORM LANE WIDTH.

NOTE

RAISED PAVEMENT MARKERS ON EDGE LINES THROUGH TRANSITION AREA ARE OPTIONAL.

* SPEED (M.P.H.)	"A" (FT.)
60	775
50	625
40	475
30	325
20	175

* PASSENGER CAR, DAYTIME POSTED SPEEDS OR 85th PERCENTILE (USE HIGHER VALUE)



PAVEMENT MARKING DETAIL

SCHEMES FOR TRANSITION FROM 2-LANE TO 4-LANE ROADWAY

FLORIDA DEPARTMENT OF TRANSPORTATION
TRAFFIC DESIGN

SPECIAL MARKING AREAS

REVISIONS		Designed by	INITIALS	DATES
Dates	Descriptions		S.W.R.	8-28-78
8-28-78	REDRAFTED	Checked by	K.R.	8-28-78
10-15-79	ADDED "MERGE"	Quantities by		
8-80	REVISE DETAILS	Checked by		
9-9-81	REVISED SIGN DESIGNATION	Supervised by	K.R.	

Approved by _____
STATE DESIGN ENGINEER—RDWY

DRAWING NO. 5 OF 8 | INDEX NO. 17346

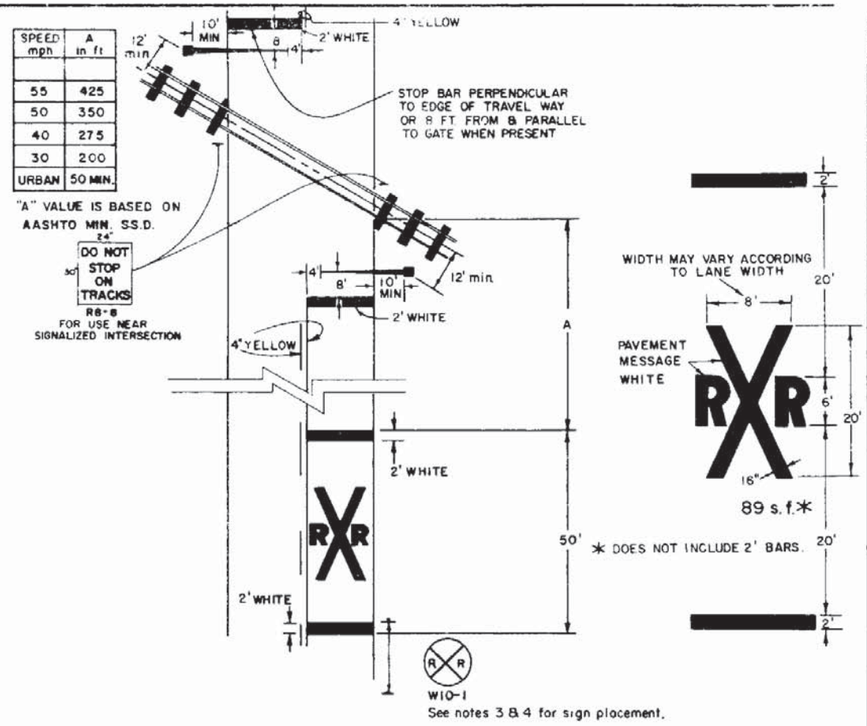

RAILROAD CROSSING AT 2-LANE ROADWAY

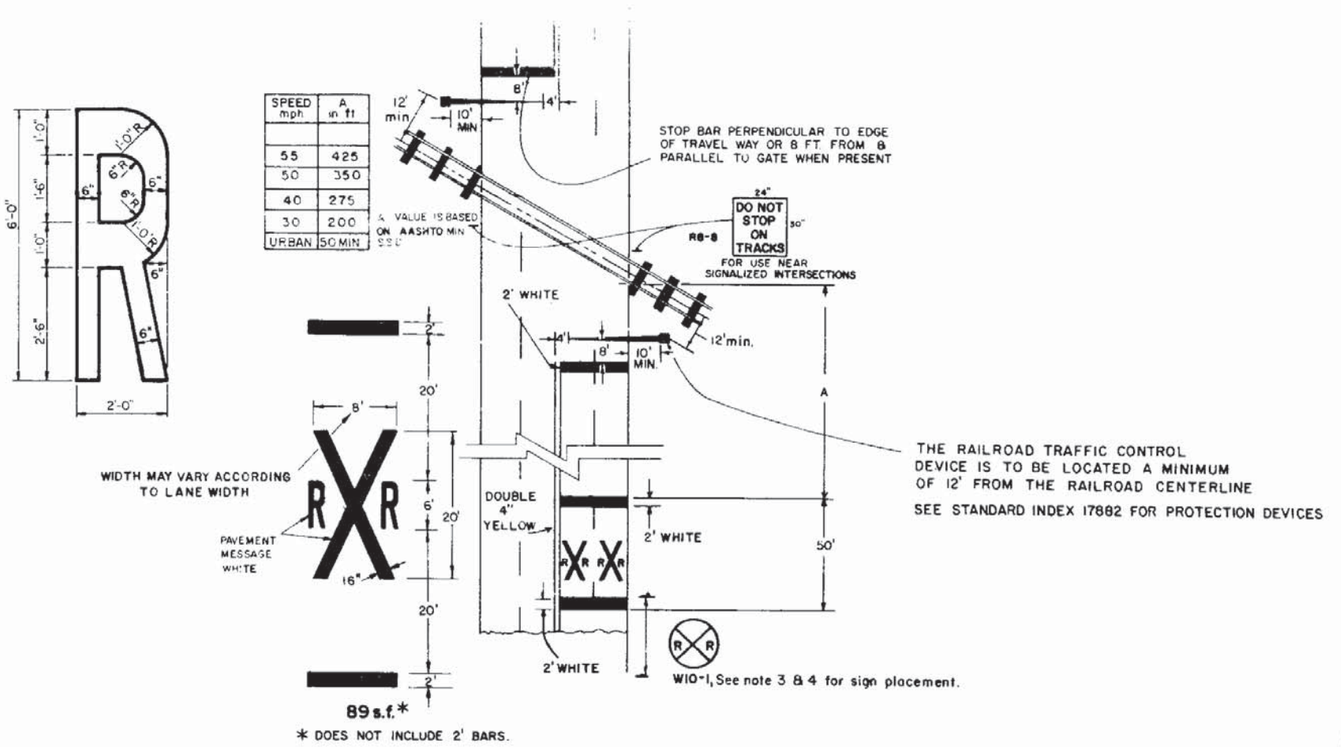

RAILROAD CROSSING AT 4-LANE ROADWAY

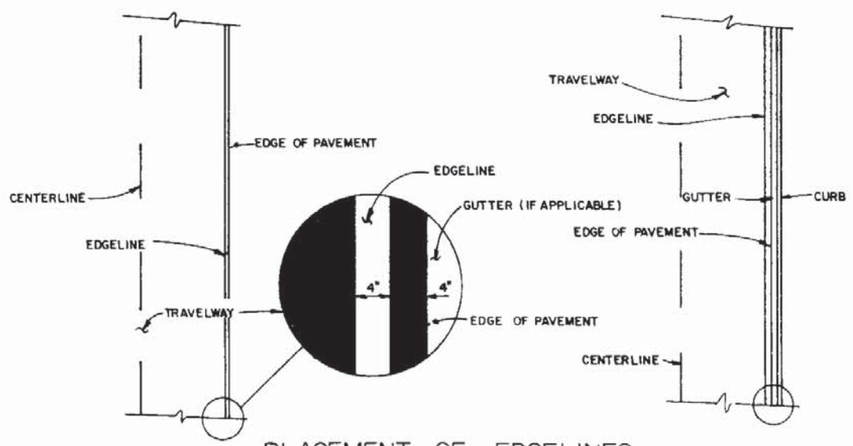

PLACEMENT OF EDGELINES

FOR NON INTERSTATE

NOTES

1. WHEN COMPUTING PAVEMENT MESSAGES, QUANTITIES DO NOT INCLUDE TRANSVERSE LINES.
2. WHEN DYNAMIC DEVICES ARE NOT PRESENT OR ARE TO BE INSTALLED, THE CROSSBUCK SHALL BE LOCATED AT THE FUTURE LOCATION OF THE RR GATE OR SIGNAL AND GATE IN ACCORDANCE WITH INDEX 17882.
3. PLACEMENT OF THE W10-1 SIGN SHALL NORMALLY BE PLACED 750 FEET OR 1000 FEET IN ADVANCE OF THE CROSSING IN RURAL AREAS AND 250 FEET IN ADVANCE OF THE CROSSING IN URBAN AREA EXCEPT THAT IN A RESIDENTIAL OR BUSINESS DISTRICT, WHERE LOW SPEEDS ARE PREVALENT, THE SIGN MAY BE PLACED A MINIMUM DISTANCE OF 100 FEET FROM THE CROSSING. WHERE STREET INTERSECTIONS OCCUR BETWEEN THE R R PAVEMENT MESSAGE AND THE TRACKS AN ADDITIONAL W10-1 SIGN & ADDITIONAL PAVEMENT MESSAGE SHOULD BE USED.
4. RECOMMENDED LOCATION FOR FTO-38 SIGN, 100ft. URBAN & 300ft. RURAL IN ADVANCE OF THE CROSSING.

FLORIDA DEPARTMENT OF TRANSPORTATION
TRAFFIC DESIGN

SPECIAL MARKING AREAS

REVISIONS			INITIALS	DATES
Dates	Descriptions	Detailed by	TL	9-1-76
8-16-78	REDRAFTED	Checked by	K.R	9-1-76
8-27-79	PAVT. MARKING REMOVED	Quantities by		
8-80	REVISE "R"	Checked by		
9-85	DELETED DETAIL & MOVED NOTES	Supervised by	K.R	

Approved by _____
STATE DESIGN ENGINEER—RDWY

DRAWING NO. 6 OF 8

INDEX NO 17346

STATE PROJ NO.	SHEET NO.

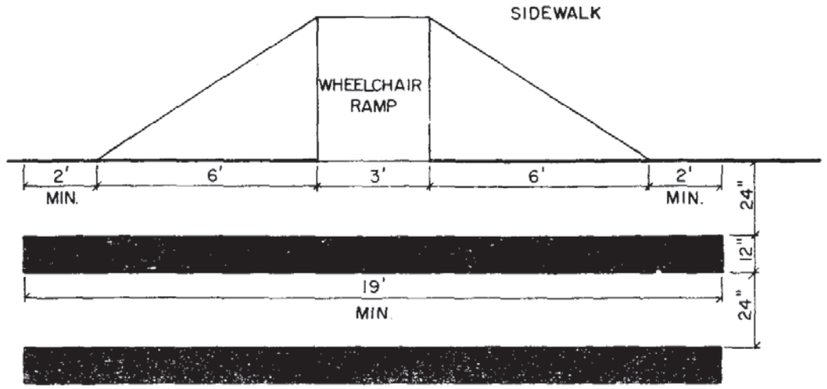

- GENERAL NOTES -

1. FOR TRAFFIC AND PEDESTRIAN SIGNAL INSTALLATION, SEE STANDARD INDEXES 17721 THROUGH 17890.
2. FOR HANDICAP CURB CUT, SEE ROADWAY DESIGN STANDARD INDEXES 304 SHEETS 1 OF 2 AND 2 OF 2
3. FOR PAVEMENT MARKING AND SIGN INSTALLATION, SEE TRAFFIC DESIGN STANDARD INDEXES 9535 THROUGH 17356.

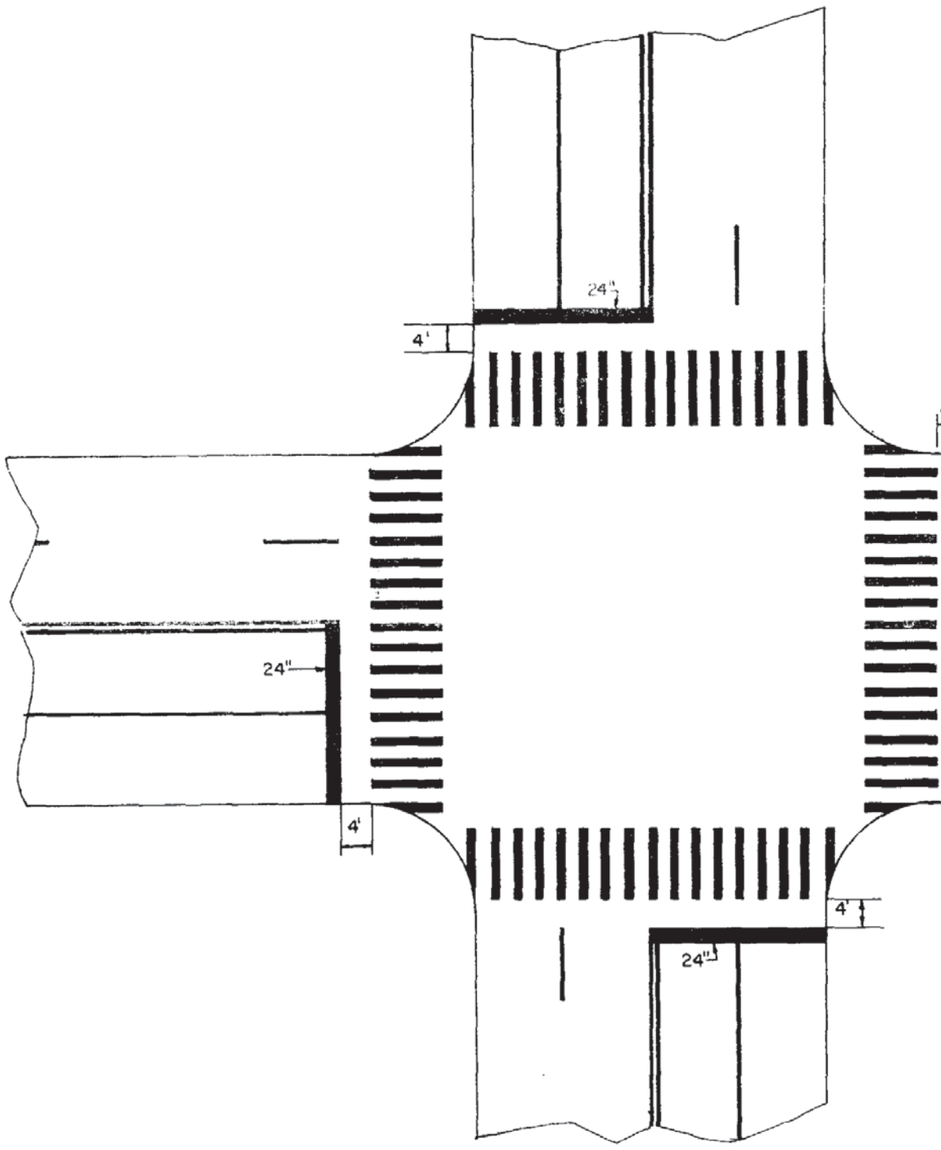

SPECIAL EMPHASIS CROSS WALK

SIGNALIZED OR STOP SIGN CONTROLLED INTERSECTION

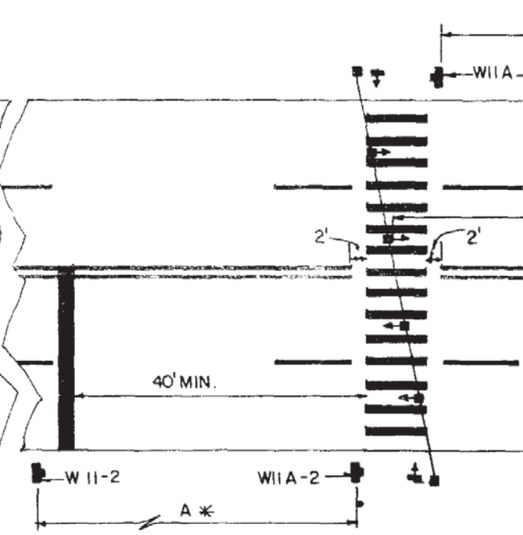

SPECIAL EMPHASIS CROSS WALK

MID-BLOCK- SIGNALIZED

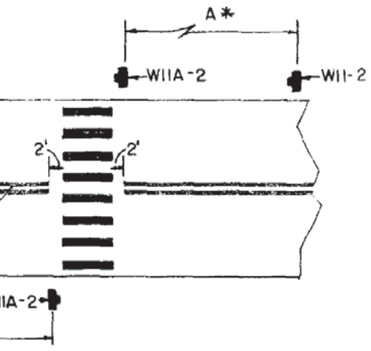

SPECIAL EMPHASIS CROSS WALK

TWO LANE - NON SIGNALIZED

APPROACH SPEED M.P.H.	A* SUGGESTED DISTANCE IN FEET
25 TO 35	275
36 TO 45	350
46 TO 55	500

REVISIONS		
DATE	INITIALS	DESCRIPTION

FLORIDA DEPARTMENT OF TRANSPORTATION
TRAFFIC DESIGN

SPECIAL MARKINGS

	INITIALS	DATES
DETAILED BY	C.E.B	9-6-85
CHECKED BY	J.D.G	9-6-85
QUANTITIES BY		
CHECKED BY		
SUPERVISED BY		

Approved by _____
STATE DESIGN ENGINEER-RDWY

DRAWING NO.	INDEX NO.
7 OF 8	17346

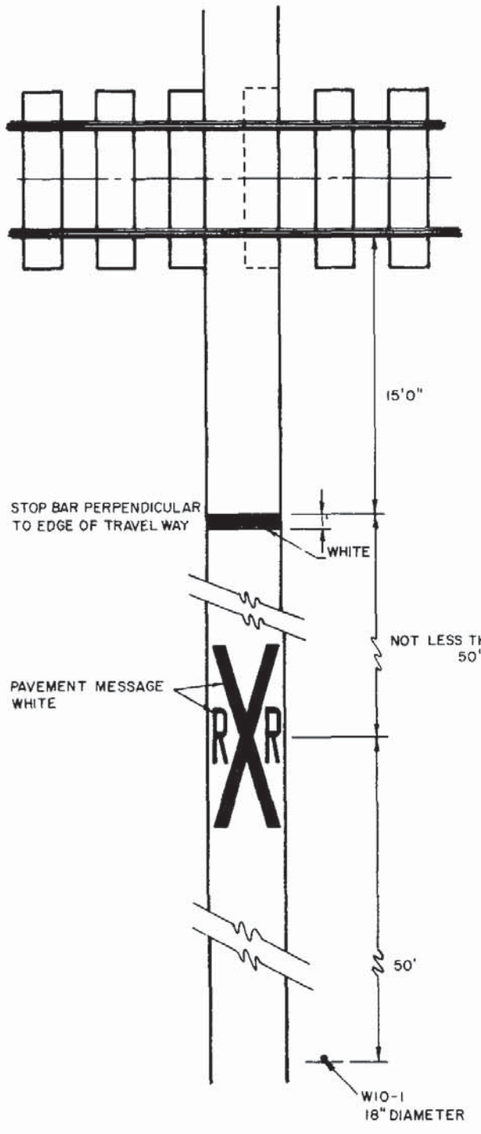

* NOTE
When used on a bike lane (adjacent to vehicle lane) markings shall be placed adjacent to markings for vehicles & W10-1 sign shall be sized and placed for vehicles.

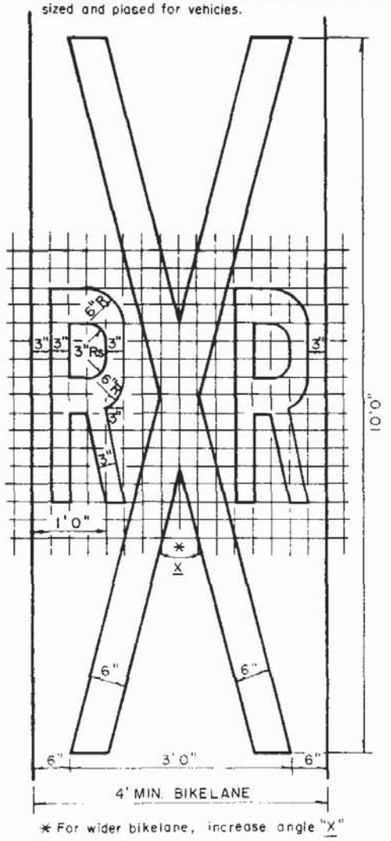

* For wider bikelane, increase angle "X"

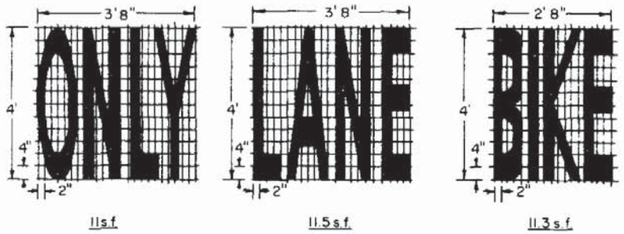

PAVEMENT MESSAGE DETAILS

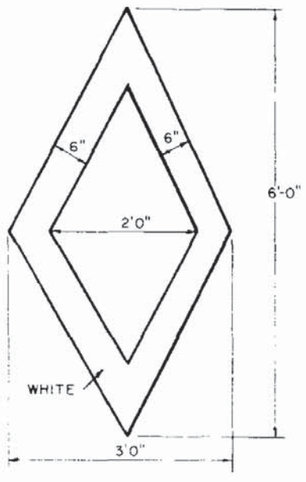

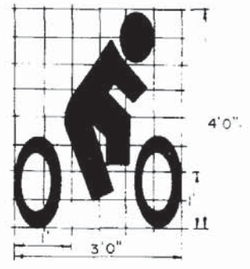

DRAWING NO.	INDEX NO.
8 OF 8	17346

REVISIONS											
DATE	BY	DESCRIPTION	DATE	BY	DESCRIPTION	DATE	BY	DESCRIPTION	DATE	BY	DESCRIPTION

	NAME	DATE		NAME	DATE
DESIGNED BY	MICK	8/84	DRAWN BY	MICK	8/84
CHECKED BY	K.R	8/84	CHECKED BY	K.R	8/84

SUPERVISED BY Kermit Ranson

FLORIDA DEPARTMENT OF TRANSPORTATION

APPROVED BY

DATE

BICYCLE SPECIAL MARKING AREAS & DETAILS

CASE I ... REFLECTOR SHALL HAVE A YELLOW REFLECTIVE BACKGROUND, AND YELLOW REFLECTIVE BUTTONS. (SIGN SHOP #812-170)

CASE II ... REFLECTOR SHALL HAVE A RED REFLECTIVE BACKGROUND, AND RED REFLECTIVE BUTTONS. (SIGN SHOP #812-171)

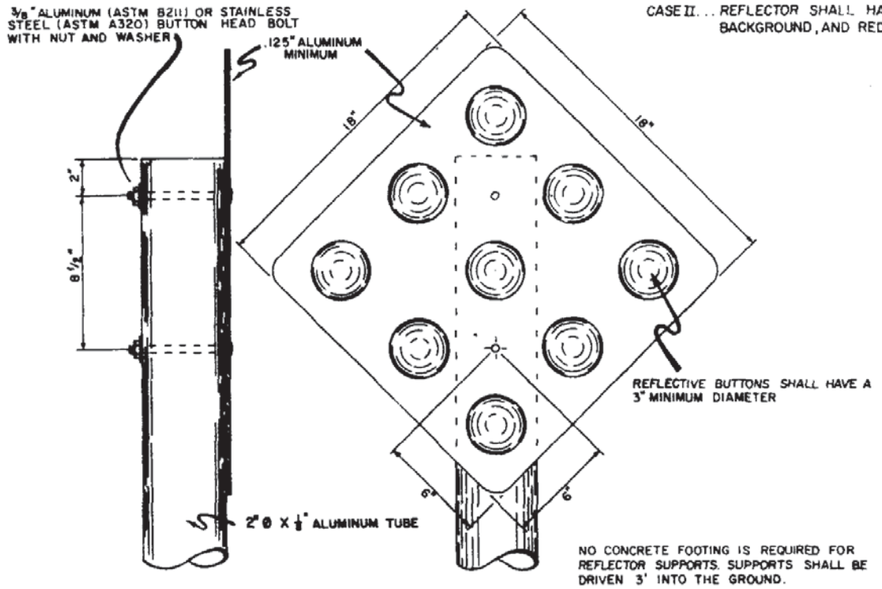

NO CONCRETE FOOTING IS REQUIRED FOR REFLECTOR SUPPORTS. SUPPORTS SHALL BE DRIVEN 3' INTO THE GROUND.

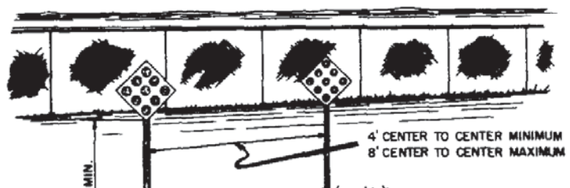

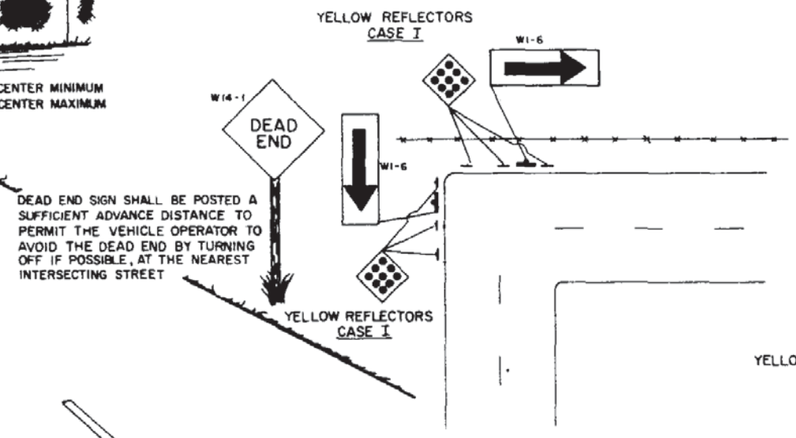

NOTE: For Pavement Marking See Index No. 17346
NO GUARDRAIL IS REQUIRED UNLESS SPECIAL FIELD CONDITIONS REQUIRE ITS USE

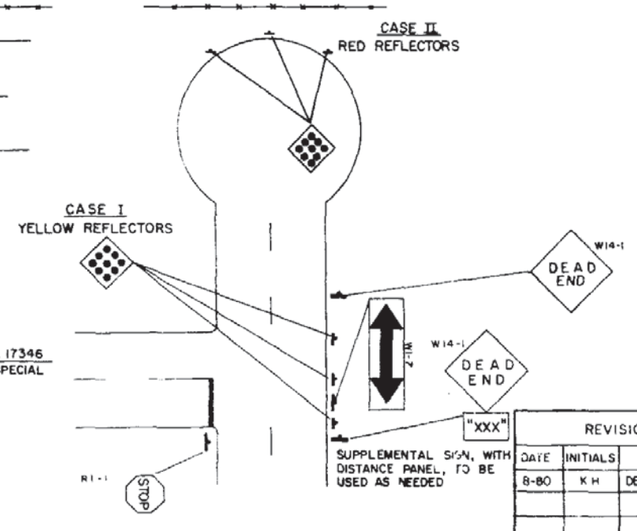

SUPPLEMENTAL SIGN, WITH DISTANCE PANEL, TO BE USED AS NEEDED

REVISIONS		
DATE	INITIALS	DESCRIPTION
8-80	K H	DELETE SIGN DETAILS

FLORIDA DEPARTMENT OF TRANSPORTATION
TRAFFIC DESIGN

TRAFFIC CONTROLS FOR STREET TERMINATIONS

	INITIALS	DATES
DETAILED BY	GW	11-4-74
CHECKED BY		
QUANTITIES BY		
CHECKED BY	KR	11-4-74
SUPERVISED BY	KR	11-4-74

Approved by
STATE DESIGN ENGINEER, ROADWAY

DRAWING NO 1 of 1

INDEX NO 17349

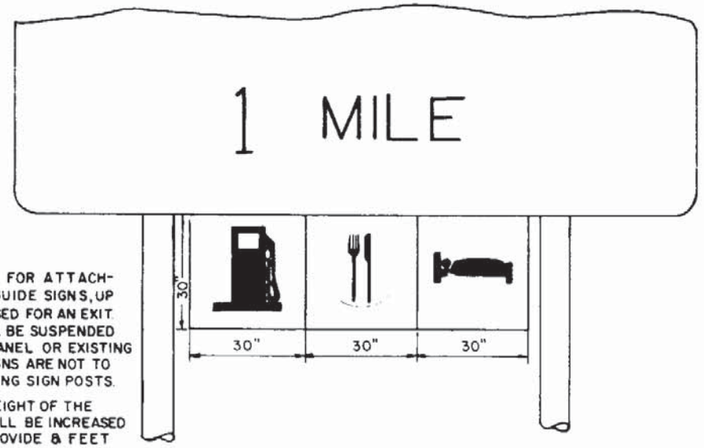

NOTE

WHEN APPROVED FOR ATTACHMENT TO THE ADVANCE GUIDE SIGNS, UP TO 3 SERVICES MAY BE USED FOR AN EXIT. THE SYMBOL SIGNS SHALL BE SUSPENDED FROM THE GUIDE SIGN PANEL OR EXISTING WIND BEAMS. SYMBOL SIGNS ARE NOT TO BE CONNECTED TO EXISTING SIGN POSTS.

THE MOUNTING HEIGHT OF THE ADVANCE GUIDE SIGN SHALL BE INCREASED WHERE NECESSARY TO PROVIDE 8 FEET BETWEEN THE LEVEL OF THE PAVEMENT EDGE AND THE BOTTOM OF THE GUIDE SIGN, PRIOR TO MOUNTING THE SUPPLEMENTARY PANEL.

DETAIL "A"
(1 TO 3 SYMBOLS ON SEPARATE PANELS)

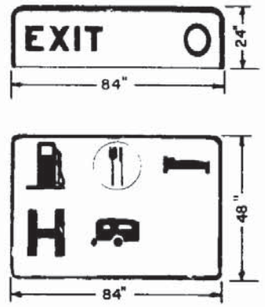

DETAIL "B"
(4 TO 6 SYMBOLS)

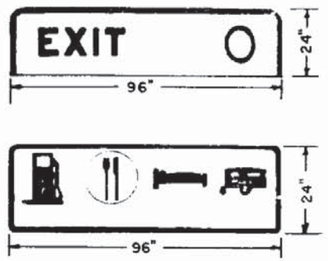

DETAIL "C"
(4 SYMBOLS)

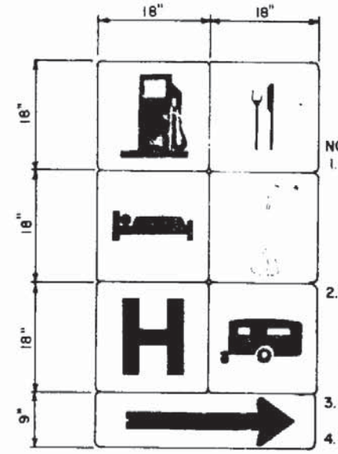

NOTES:
1. SIGNS SHALL BE LOCATED ON THE SIDE OF THE RAMP FOR SERVICES IN THAT PARTICULAR DIRECTION. IF THERE ARE SERVICES IN BOTH DIRECTIONS, THEN SIGNS SHALL BE INSTALLED ON BOTH SIDES.
2. "RAMP MOUNTED SIGNS SHALL BE INSTALLED TO AVOID CONFLICT WITH EXISTING SIGNS AND IN NO CASE SHOULD THEY BE PLACED WITHIN 100' OF ANOTHER SIGN."
3. SINGLE PANEL ARROW SIZE WILL BE 18"x9".
4. DUAL PANEL ARROW SIZE WILL BE 36"x9".

DETAIL "D"
(EACH SYMBOL ON SEPARATE PANEL)

GENERAL NOTES

1 - ONLY THOSE SERVICES MEETING CRITERIA ESTABLISHED BY THE DEPARTMENT AND APPROVED BY THE STATE TRAFFIC OPERATIONS ENGINEER FOR EACH INTERCHANGE SHALL BE SHOWN. SYMBOL SIGNS FOR MOTORIST SERVICES SHALL ALWAYS APPEAR IN THE FOLLOWING ORDER READING FROM LEFT TO RIGHT AND TOP TO BOTTOM GAS, FOOD, LODGING, PHONE*, HOSPITAL, CAMPING.

* THE PHONE SYMBOL SHALL NOT BE SHOWN WHENEVER ANY GAS, FOOD, LODGING OR CAMPING SYMBOL APPEARS.

2 ON SUPPLEMENTAL SIGNS (DETAILS "B" & "C"), SYMBOLS SHALL APPEAR IN THE SPECIFIC LOCATION SHOWN. BLANK SPACES SHALL BE LEFT FOR SERVICES NOT AVAILABLE

3 - ALL MOTORIST SERVICE SIGNS TO HAVE WHITE REFLECTIVE LEGEND AND BORDER WITH BLUE REFLECTIVE BACKGROUND.

4 WHEN GAS AND DIESEL ARE BOTH AVAILABLE, ONLY THE DIESEL PANEL WILL BE USED.

5 FOR MOUNTING DETAILS SEE INDEX 9535 FOR TYPE "A" BREAKAWAY OR INDEX 11860 FOR TYPE "C" FRANGIBLE

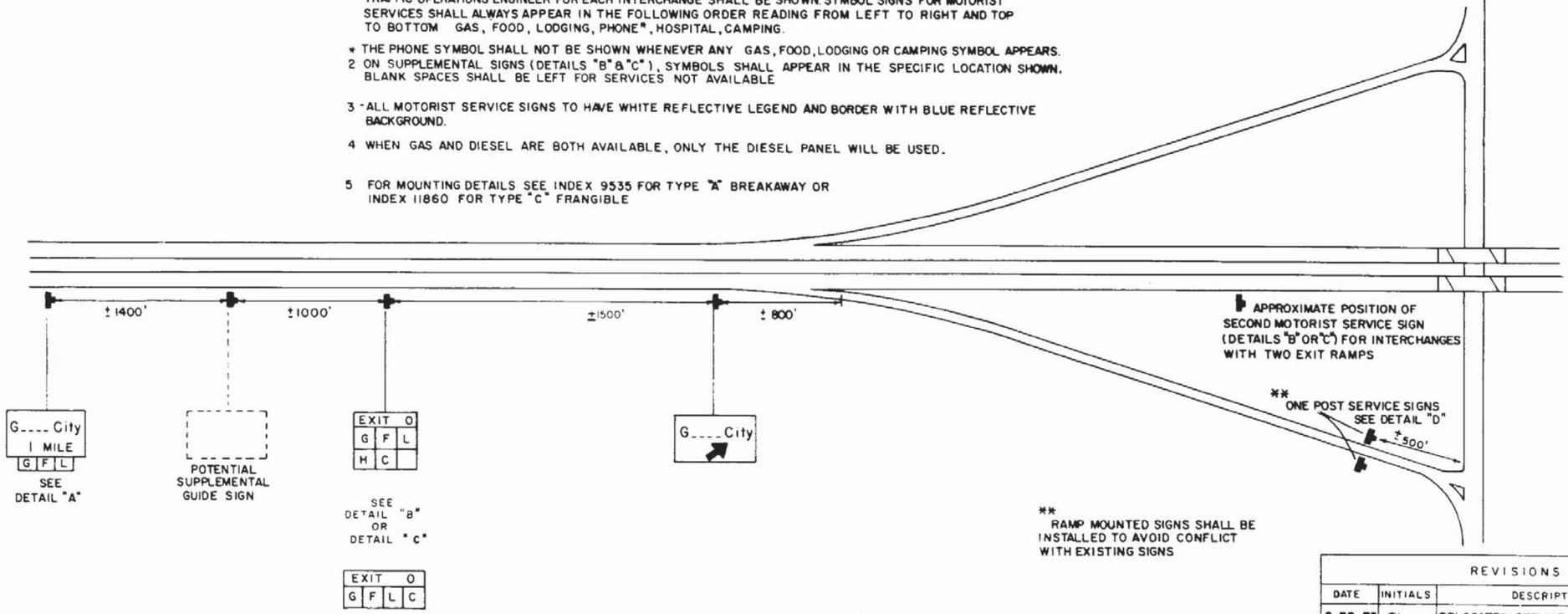

** RAMP MOUNTED SIGNS SHALL BE INSTALLED TO AVOID CONFLICT WITH EXISTING SIGNS

NOTE

FOR ATTACHMENT DETAILS TO ADVANCE GUIDE SIGN SEE INDEX NO. 13417

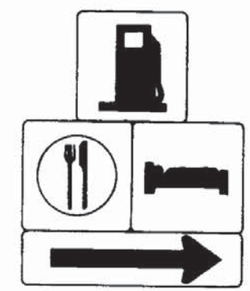

WHEN AN ODD NUMBER OF SYMBOL PANELS ARE USED THE TOP PANEL SHALL BE CENTERED

REVISIONS		
DATE	INITIALS	DESCRIPTION
8-30-76	T.L.	RELOCATED SERVICE SIGNS
9-27-76	T.L.	RELOCATED SIGN & ADD NOTE (Detail "D")
10-4-79	K.H.	ADDED NOTES AND DETAIL

FLORIDA DEPARTMENT OF TRANSPORTATION
TRAFFIC DESIGN

SIGNING FOR MOTORIST SERVICES

	INITIALS	DATES
DETAILED BY	W.B.	3-76
CHECKED BY		
QUANTITIES BY		
CHECKED BY	K.R.	3-76
SUPERVISED BY	K.R.	

Approved by _____
STATE DESIGN ENGINEER, ROADWAY

DRAWING NO. 1 of 1

INDEX NO. 17350

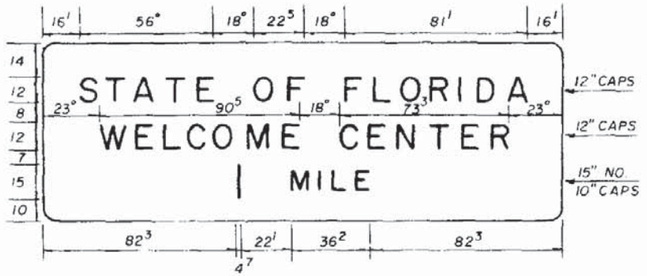

SIGN NO. FTO-17
6'-6" x 19'-0"
3" BOR. 9" RAD.
BLUE REFL. BACKGROUND
WHITE REFL. LEGEND & BORDER

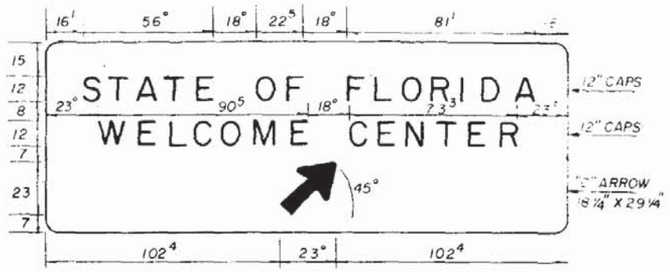

SIGN NO. FTO-18
7'-0" x 19'-0"
3" BOR. 9" RAD.
BLUE REFL. BACKGROUND
WHITE REFL. LEGEND & BORDER

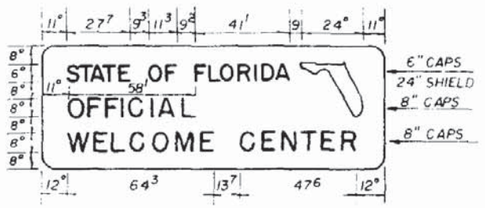

SIGN NO. FTO-19
4'-6" x 12'-6"
2" BOR. 9" RAD.
BLUE REFL. BACKGROUND
WHITE REFL. LEGEND & BORDER
ORANGE REFL. STATE SILHOUETTE

(SIGN NO. FTO-19 TO BE PAID FOR WITH FUNDS OTHER THAN D.O.T.)



SIGN NO. FTO-20
5'-6" x 7'-0"
2" BOR. 9" RAD.
BLUE REFL. BACKGROUND
WHITE REFL. LEGEND & BORDER

NOTE

DISTANCE MESSAGE OF 1/2 MILE MAY BE USED TO KEEP THIS SIGN WITHIN THE STATE LINE.

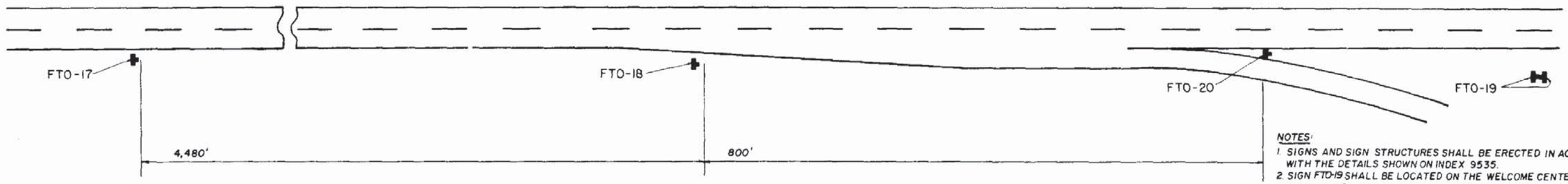

NOTES:
1. SIGNS AND SIGN STRUCTURES SHALL BE ERECTED IN ACCORDANCE WITH THE DETAILS SHOWN ON INDEX 9535.
2. SIGN FTO-19 SHALL BE LOCATED ON THE WELCOME CENTER GROUNDS IN PROXIMITY TO THE BUILDING AND AS FAR FROM THE MAIN LINE ROADWAYS AS POSSIBLE (2 SIGNS BACK TO BACK).
3. SIGN FTO-17,18,19 SHALL BE LOCATED ON LIMITED ACCESS HIGHWAYS ONLY.
4. DETAIL OF FLORIDA SYMBOL IS AVAILABLE ON REQUEST FROM TRAFFIC OPERATIONS OFFICE OF D.O.T.

NOTE:
ROADWAY NOT DRAWN TO SCALE

DISTANCES SHOWN ARE APPROPRIATE FOR ADEQUATE DRIVER COMMUNICATION BUT MAY BE ALTERED SLIGHTLY IF FIELD CONDITIONS REQUIRE.

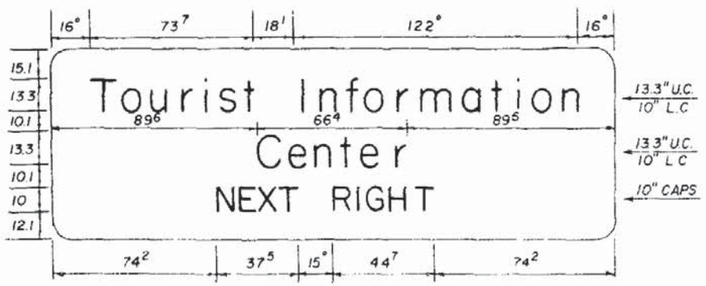

SIGN NO FTO-21
7'-0" x 20'-6"
3" BOR-9" RAD.

NOTE: SIGN SHALL HAVE BLUE REFLECTORIZED BACKGROUND WITH WHITE REFLECTORIZED LEGEND & BORDER. SIGN FTO-21 SHALL BE USED AS A SUPPLEMENTAL GUIDE SIGN AT INTERCHANGES WHICH HAVE A TOURIST INFORMATION CENTER APPROVED FOR SUCH SIGNING. (LOCATE HALF-WAY BETWEEN NORMAL GUIDE SIGNS.)

REVISIONS

DATE	INITIALS	DESCRIPTION

FLORIDA DEPARTMENT OF TRANSPORTATION
TRAFFIC DESIGN
WELCOME CENTER SIGNING
FOR LIMITED ACCESS HIGHWAYS

	INITIALS	DATES
DETAILED BY	W.B.	6-75
CHECKED BY		
QUANTITIES BY		
CHECKED BY		
SUPERVISED BY	K.R.	6-75

Approved by _____
STATE DESIGN ENGINEER-RDWY

DRAWING NO. 1 OF 2
INDEX NO. 17351

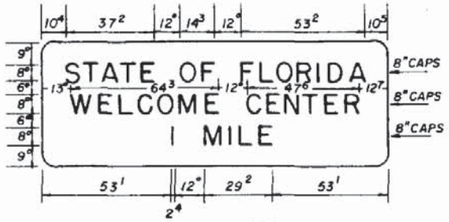

SIGN NO. FTO-22A
4'-6" x 12'-6"
2" BOR.-9" RAD.
BLUE REFL. BACKGROUND
WHITE REFL. LEGEND & BORDER

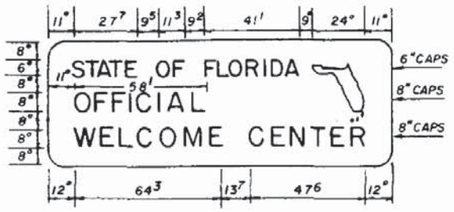

SIGN NO. FTO-19
4'-6" x 12'-6"
2" BOR-9" RAD
BLUE REFL. BACKGROUND
WHITE REFL. LEGEND & BORDER
ORANGE REFL. STATE SILHOUETTE
(SIGN NO. FTO-19 TO BE PAID FOR WITH FUNDS OTHER THAN D.O.T.)

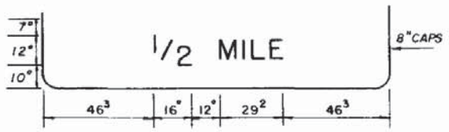

SIGN NO. FTO-22B
5'-0" x 12'-6"
2" BOR.-9" RAD.

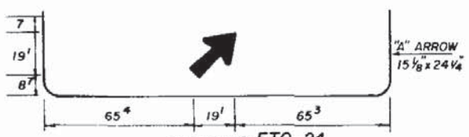

SIGN NO. FTO-24
5'-6" x 12'-6"
2" BOR.-9" RAD.

NOTES

(1) SIGNS AND SIGN STRUCTURES SHALL BE ERECTED IN ACCORDANCE WITH THE DETAILS SHOWN ON INDEX 9535.

(2) SIGN FTO-19 SHALL BE LOCATED ON THE WELCOME CENTER GROUNDS IN PROXIMITY TO THE BUILDING AND AS FAR FROM THE MAIN LINE ROADWAYS AS POSSIBLE (2 SIGNS BACK TO BACK)

(3) DETAIL OF FLORIDA SYMBOL IS AVAILABLE ON REQUEST FROM TRAFFIC OPERATIONS OFFICE OF D.O.T.

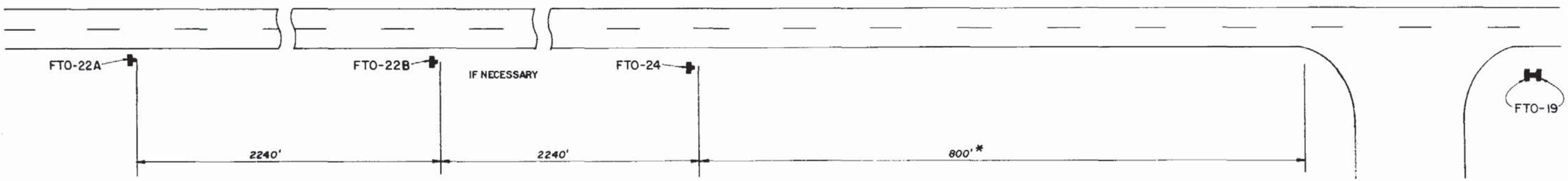

NOTE
ROADWAY NOT DRAWN TO SCALE

*800' MAXIMUM FOR RURAL CONDITIONS
50' MINIMUM FOR CONGESTED AREAS

NOTE
EITHER ONE BUT NOT BOTH OF SIGNS FTO-22A OR B SHOULD BE USED DEPENDING ON SPEED, ROADSIDE DEVELOPMENT & GEOMETRIC CONDITIONS.

REVISIONS		
DATE	INITIALS	DESCRIPTION

FLORIDA DEPARTMENT OF TRANSPORTATION
TRAFFIC DESIGN
WELCOME CENTER SIGNING
FOR PRIMARY HIGHWAYS

	INITIALS	DATES
DETAILED BY	W.B.	6-75
CHECKED BY		
QUANTITIES BY		
CHECKED BY		
SUPERVISED BY	K.R.	6-75

Approved by _____
STATE DESIGN ENGINEER - RDWY

DRAWING NO. 2 OF 2
INDEX NO. 17351

Alternating Skip Line

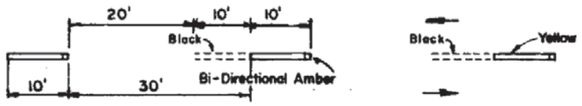

Double Solid Line

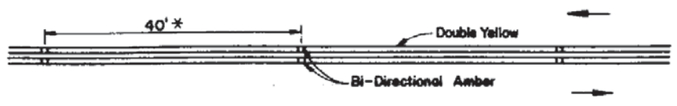

Solid Line With Alternating Skip

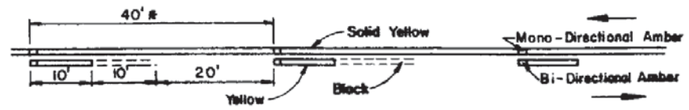

NOTE: ON TWO-WAY TRAFFIC MARKERS MAY BE INSTALLED EITHER ON THE LEADING EDGE OR TRAILING EDGE OF THE STRIPE

Skip Line



Solid Line With Skip

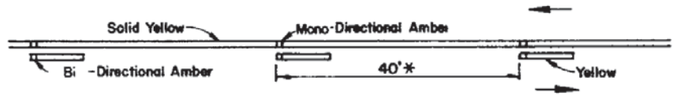

Skip Line With Two Way Left Turn Lane

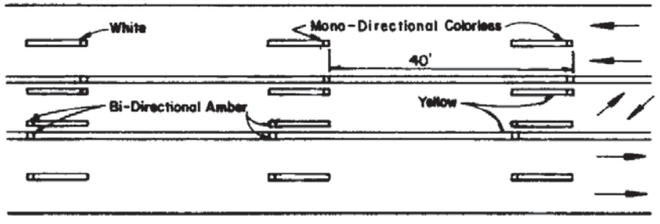

Alternating Skip Line With Two Way Left Turn Lane

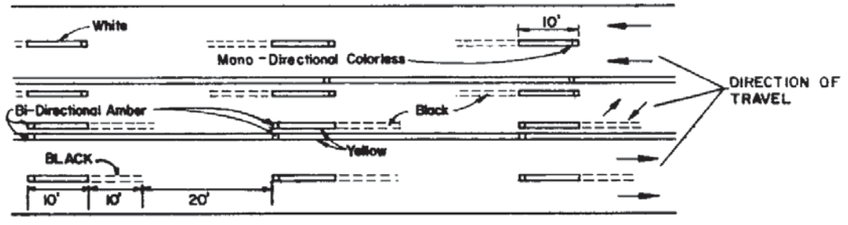

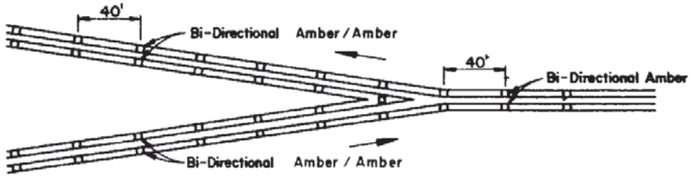

✳ Note:
Reflective Pavement Markers shall be placed 40' c/c on all projects, however on sharp curves less than 40' may be used, if specified by the plans.

For Pavement Arrow Requirements see Index 17346.

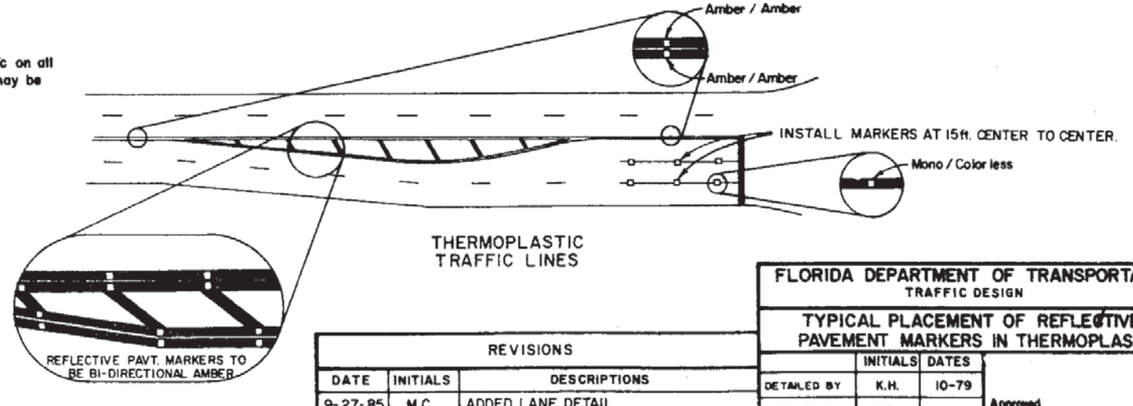

THERMOPLASTIC TRAFFIC LINES

REVISIONS		
DATE	INITIALS	DESCRIPTIONS
9-27-85	M.C.	ADDED LANE DETAIL

FLORIDA DEPARTMENT OF TRANSPORTATION
TRAFFIC DESIGN

TYPICAL PLACEMENT OF REFLECTIVE PAVEMENT MARKERS IN THERMOPLASTIC

	INITIALS	DATES
DETAILED BY	K.H.	10-79
CHECKED BY	K.R.	10-79
QUANTITIES BY		
CHECKED BY		
SUPERVISED BY		

Approved by _____
STATE DESIGN ENGINEER - ROWY

Drawing No. 1 of 2
Index No. 17352

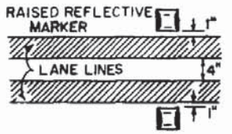

DIRECTION OF TRAVEL WITH STATIONING

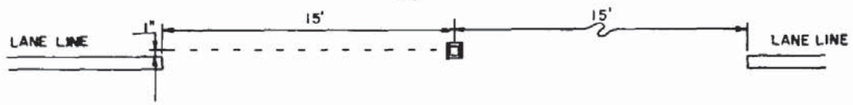

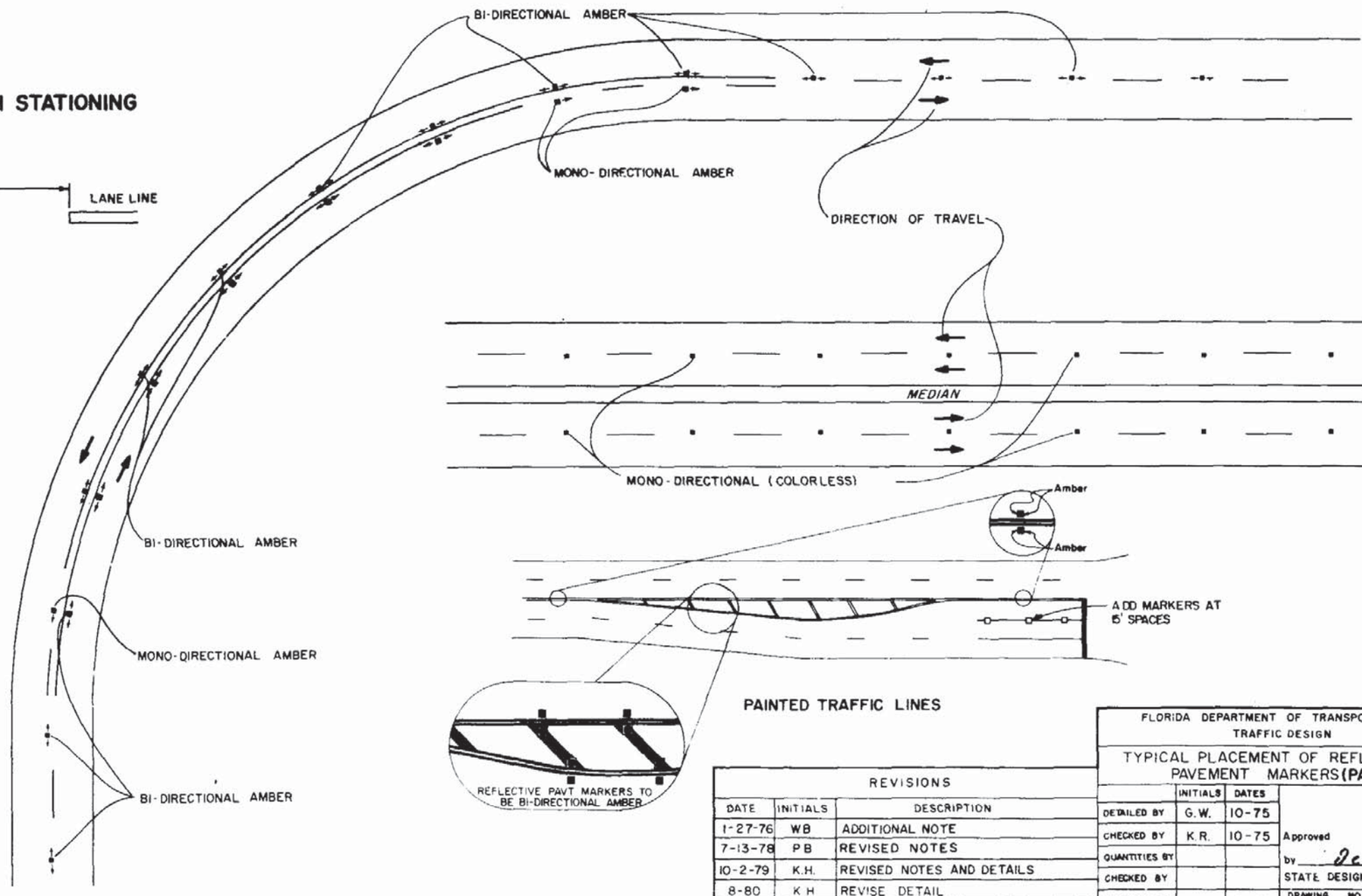

NOTES

1. FOR LANE LINES SEPARATING ONE-WAY TRAFFIC, RAISED REFLECTIVE MARKERS SHALL BE MONO-DIRECTIONAL (COLORLESS.)
2. FOR CENTER LANE MARKINGS, FOR TWO-WAY TRAFFIC, RAISED REFLECTIVE MARKERS SHALL BE BI-DIRECTIONAL (AMBER & AMBER), EXCEPT WHERE PASSING IS RESTRICTED IN ONE DIRECTION ONLY.
3. RAISED REFLECTIVE MARKERS SHALL BE PLACED 40' C/C ON ALL PROJECTS, HOWEVER ON SHARP CURVES LESS THAN 40' MAY BE USED, IF SPECIFIED BY THE PLANS.
4. ALL MARKINGS SHALL BE APPLIED BEFORE RAISED MARKERS ARE INSTALLED.

PAINTED TRAFFIC LINES

REVISIONS		
DATE	INITIALS	DESCRIPTION
1-27-76	WB	ADDITIONAL NOTE
7-13-78	PB	REVISED NOTES
10-2-79	K.H.	REVISED NOTES AND DETAILS
8-80	K H	REVISE DETAIL

FLORIDA DEPARTMENT OF TRANSPORTATION
TRAFFIC DESIGN

TYPICAL PLACEMENT OF REFLECTIVE PAVEMENT MARKERS (PAINT)

	INITIALS	DATES
DETAILED BY	G.W.	10-75
CHECKED BY	K.R.	10-75
QUANTITIES BY		
CHECKED BY		
SUPERVISED BY	K.R.	10-75

Approved
by _____
STATE DESIGN ENGINEER - PLNG

DRAWING NO. 2 of 2
INDEX NO. 17352

STATE PROJ. NO.	SHEET NO.

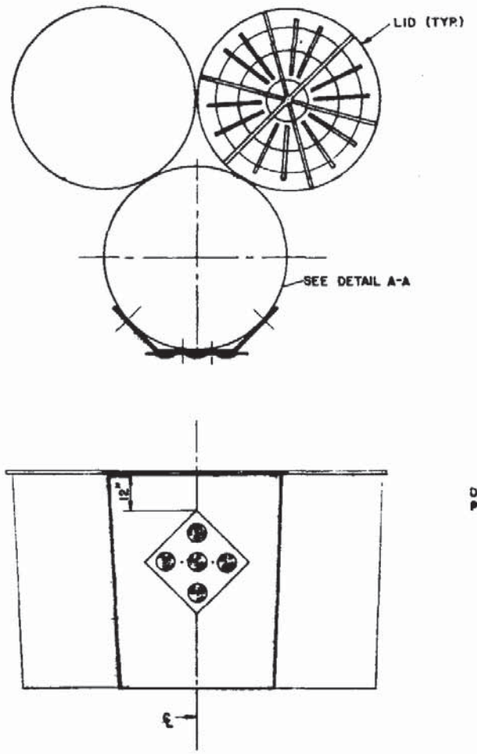

PLACEMENT OF DELINEATOR PANEL

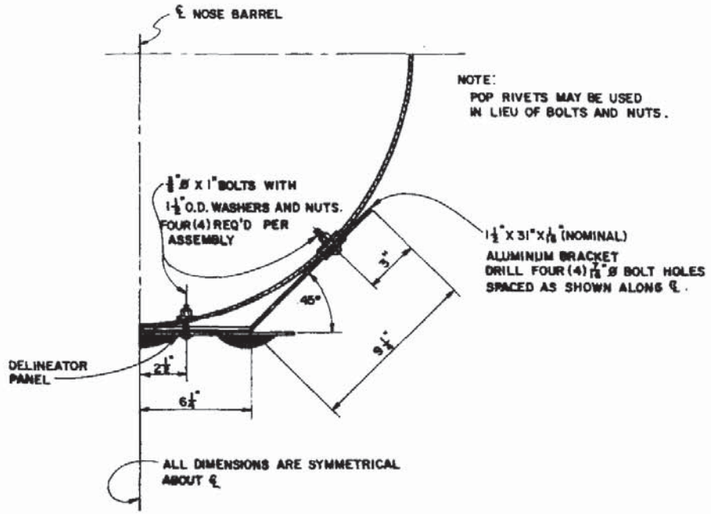

DETAIL A-A

ENERGITE SYSTEM

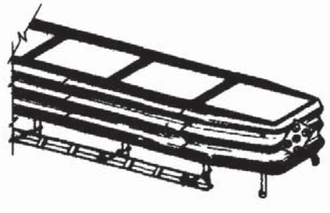

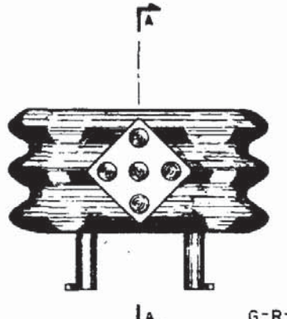

G-R-E-A-T SYSTEM

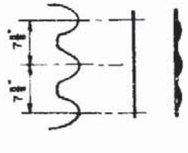

SECTION A-A

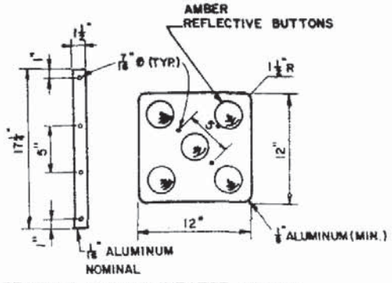

BRACKET AND DELINEATOR DETAIL

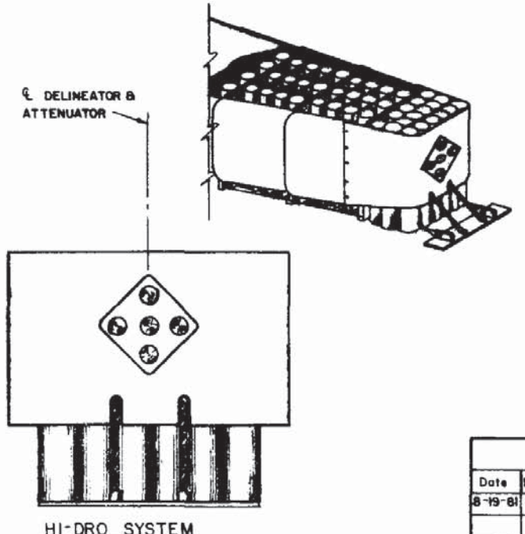

HI-DRO SYSTEM

FLORIDA DEPARTMENT OF TRANSPORTATION TRAFFIC DESIGN					
MARKINGS FOR ATTENUATION SYSTEMS					
REVISIONS				INITIALS	DATES
Date	Initials	Descriptions	Detailed by	R.G.L.	9-81
8-19-81	R.G.L.		Checked by		
			Quantities by		
			Checked by		
			Supervised by		
Approved by: STATE DESIGN ENGINEER - RDWY					
DRAWING NO. 1 of 1			INDEX NO. 17353		

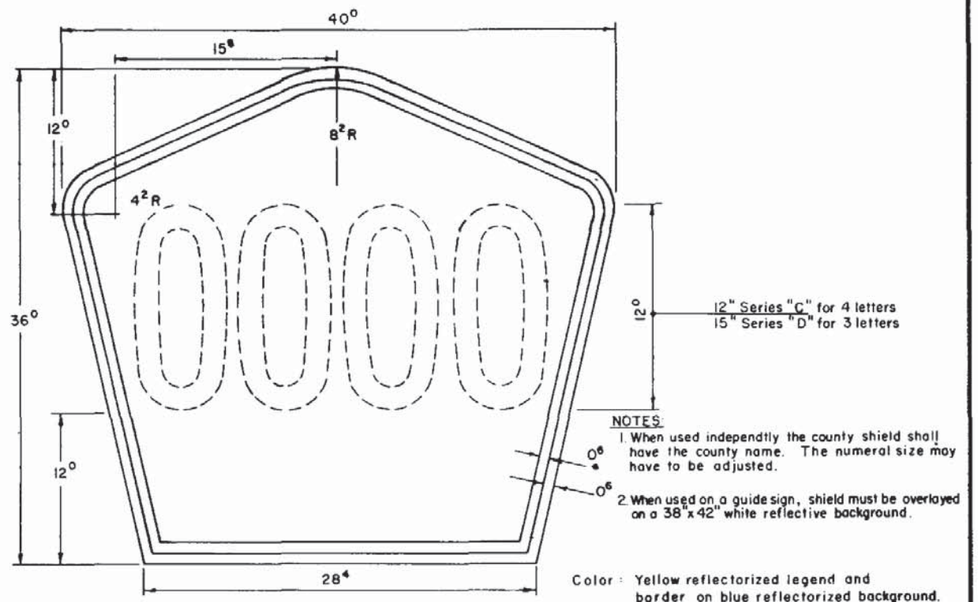

NOTES:
1. When used independtly the county shield shall have the county name. The numeral size may have to be adjusted.
2. When used on a guide sign, shield must be overlayed on a 38"x42" white reflective background.

Color: Yellow reflectorized legend and border on blue reflectorized background.

COUNTY ROUTE MARKER DETAIL
(3&4 DIGIT MARKER)

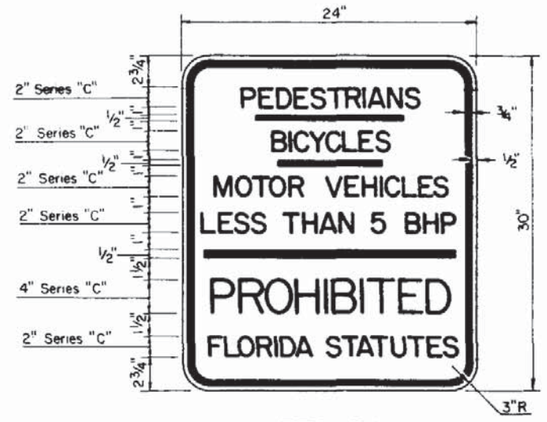

FTO-30

Notes: The color of the sign shall be **silver-white** reflectorized background with black opaque border and legend.

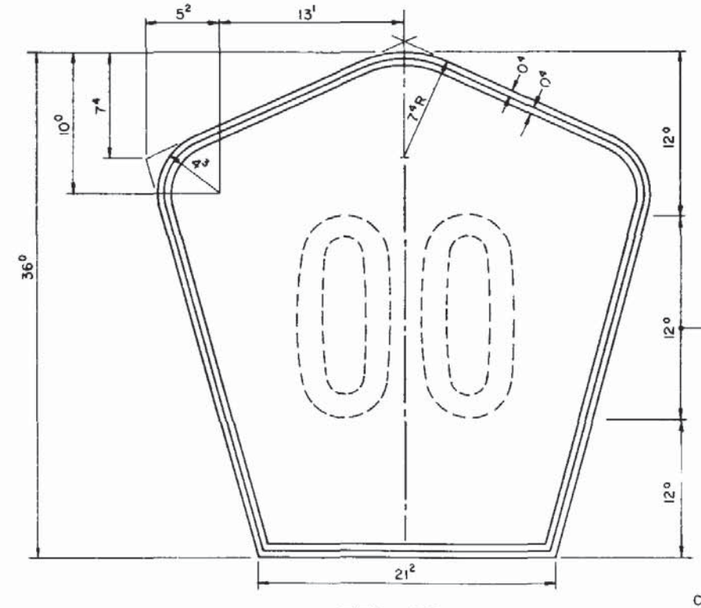

NOTE:
1. Signs for 1-4 digits are to be used on guide signs.
2. When used on a guide sign, shield must be overlayed on a 38"x 38" white reflective background.

Color: Yellow reflectorized legend and border on blue reflectorized background.

FTO-29

COUNTY ROUTE MARKER DETAIL
(1&2 DIGIT MARKER)

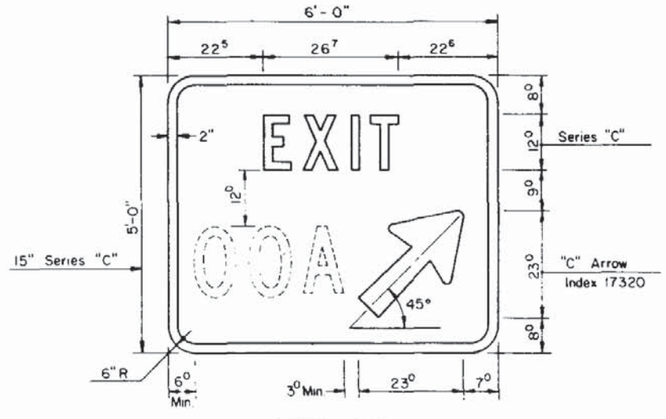

The exit number shall be centered in the space provided on sign panel.

Color is reflective green background with reflective white legend and border.

Reduce size of numbers when 3 or more digits are used. Example 100A.

FTO-31

EXIT PANEL
(GORE INSTALLATION)

REVISIONS		
DATE	INITIALS	DESCRIPTION
8-80	K.H.	REDRAFTED, COUNTY SHLD. REVISED
9-85	M.C.	ADDED COUNTY NAME NOTE.

FLORIDA DEPARTMENT OF TRANSPORTATION
TRAFFIC DESIGN

SPECIAL SIGN DETAILS

	INITIALS	DATES
DETAILED BY		
CHECKED BY		
QUANTITIES BY		
CHECKED BY		
SUPERVISED BY		

Approved by _____
STATE DESIGN ENGINEER - RDWY

DRAWING NO. 1 OF 4

INDEX NO. 17355

GENERAL NOTE

1. SIGNS FTO-25 AND FTO-26 MAY BE FABRICATED ON ONE PANEL OR TWO.
2. SIGN FTO-25 IS FOR USE IN AREAS WHERE THERE IS LIMITED SPACE.
3. USE OF SIGNS PER FLORIDA STATUTES
   FTO-25 and FTO-26 ,FS 316.1955 & 316.1956
   FTO-38A and FTO-38B ,FS 351.03
   FTO-39 ,FS 316.212

EDUCATIONAL PLAQUE FOR SIGN FTO-38A



EDUCATIONAL PLAQUE FOR SIGN FTO-39

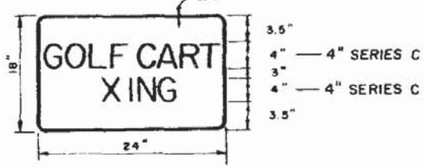

Notes:
1. Both signs shall have a reflectorized yellow background with black opaque legend & border.



FTO-26

Notes:
1. All letters are 1.5" Series "C".
2. Top sign shall have a reflectorized blue background with white reflectorized legend & border.
3. Bottom sign shall have a reflectorized white background with black opaque legend & border.



FTO-25

Notes:
1. All letters are 1" Series "C".
2. Top portion of sign shall have a reflectorized blue background with white reflectorized legend & border.
3. Bottom portion of sign shall have a reflectorized white background with black opaque legend & border.

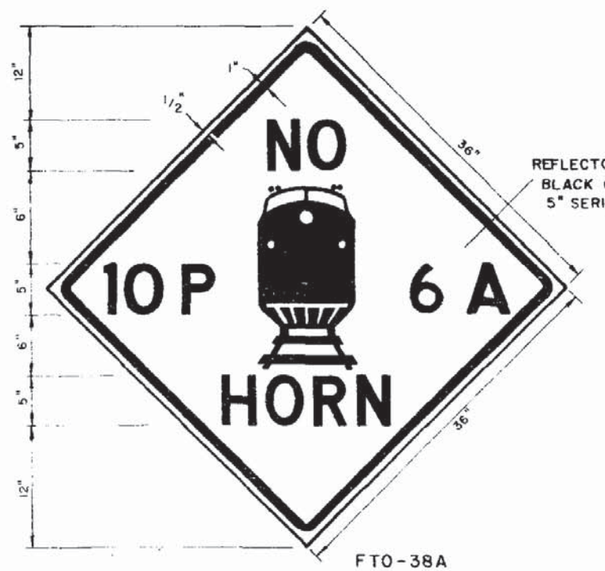

REFLECTORIZED YELLOW SIGN WITH BLACK OPAQUE LEGEND & BORDER. 5" SERIES C LETTERS

FTO-38A

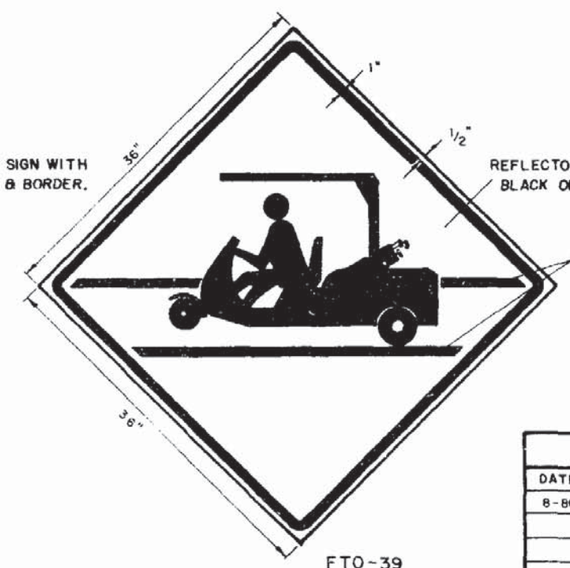

REFLECTORIZED YELLOW SIGN WITH BLACK OPAQUE LEGEND & BORDER.

Note:
1. For golf cart warning remove the two (2) cross walk stripes.

FTO-39

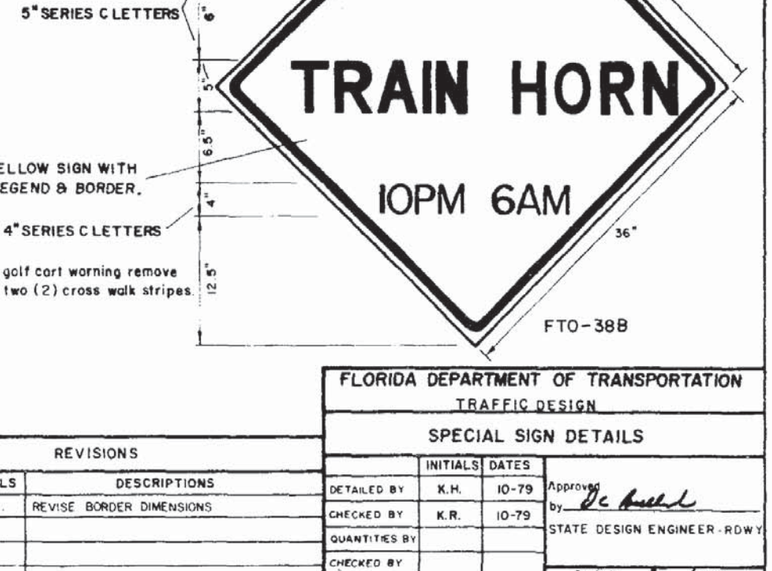

FTO-38B

REVISIONS		
DATE	INITIALS	DESCRIPTIONS
8-80	K.H.	REVISE BORDER DIMENSIONS

FLORIDA DEPARTMENT OF TRANSPORTATION
TRAFFIC DESIGN
SPECIAL SIGN DETAILS

	INITIALS	DATES
DETAILED BY	K.H.	10-79
CHECKED BY	K.R.	10-79
QUANTITIES BY		
CHECKED BY		
SUPERVISED BY		

Approved by _____
STATE DESIGN ENGINEER - RDWY

Drawing No. 2 OF 4
Index No. 17355

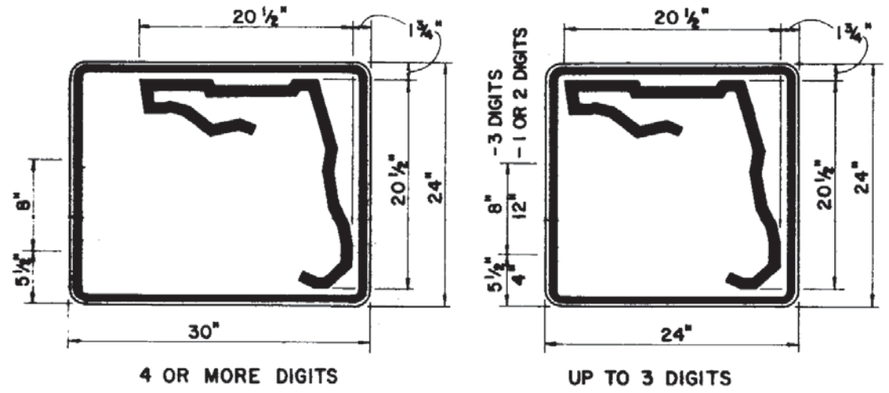

4 OR MORE DIGITS

UP TO 3 DIGITS

NUMERAL	SIZE
1 or 2 Digits	12" Series "C" - 24"x24"
3 Digits	8" Series "B" - 24"x24"
4 Digits	8" Series "B" - 24"x30"
More Than 4 Digits	8" Series "B" - 24"x30"

Notes: 1. All state route markers and auxiliaries shall have black opaque legend and border with white reflective background.

FLORIDA ROUTE MARKER FOR INDEPENDENT USE

FTO-28

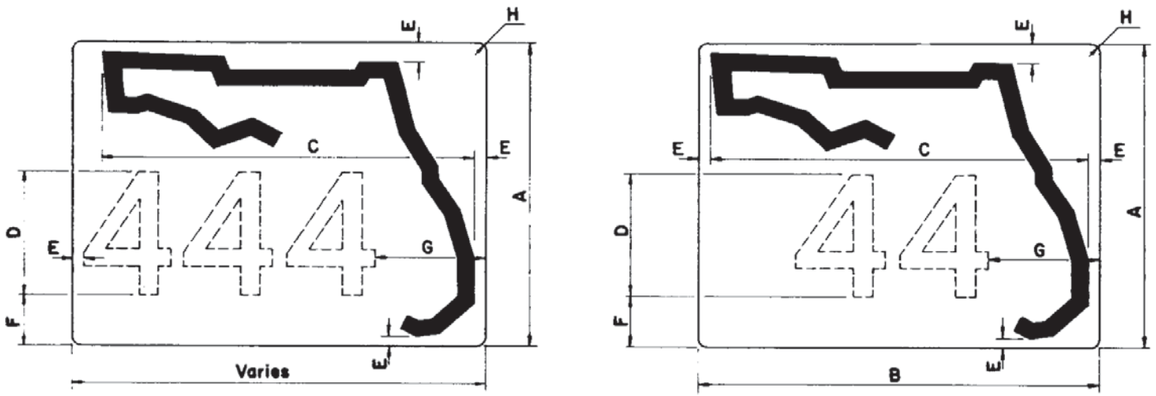

3 OR MORE DIGITS

1 OR 2 DIGITS

	A	B	C	D	E	F	G	H
24"	24"	28"	26"	10"	1"	4¾"	10"	1½"
30"	30"	38"	36"	12"	1"	5"	11"	1½"
36"	36"	45"	41"	15"	2"	7"	12"	2"

Notes: 1. Florida shield shall have black opaque legend with white reflective background.

FLORIDA SHIELD FOR GUIDE SIGN USE

Notes:
1. Type 'B' arrow to be positioned as indicated on Signing Plans.
2. Green reflectorized background with White reflectorized legend and border.



ARROW VERTICAL		ARROW LEFT	
ARROW 45° LEFT		ARROW RIGHT	
ARROW 45° RIGHT		NO ARROW	

DETAIL LAYOUT OF

FLORIDA TURNPIKE TRAILBLAZER

FTO-27

FLORIDA DEPARTMENT OF TRANSPORTATION
TRAFFIC DESIGN

SPECIAL SIGN DETAILS

REVISIONS		
DATE	INITIALS	DESCRIPTION

	INITIALS	DATES
DETAILED BY	K. H.	8-80
CHECKED BY	K. R.	8-80
QUANTITIES BY		
CHECKED BY		
SUPERVISED BY		

Approved by _____
STATE DESIGN ENGINEER-RDWY

DRAWING NO. 3 OF 4

INDEX NO. 17355

STATE PROJ. NO.	SHEET NO.

COLOR

Black non reflective legend and border with white reflective background

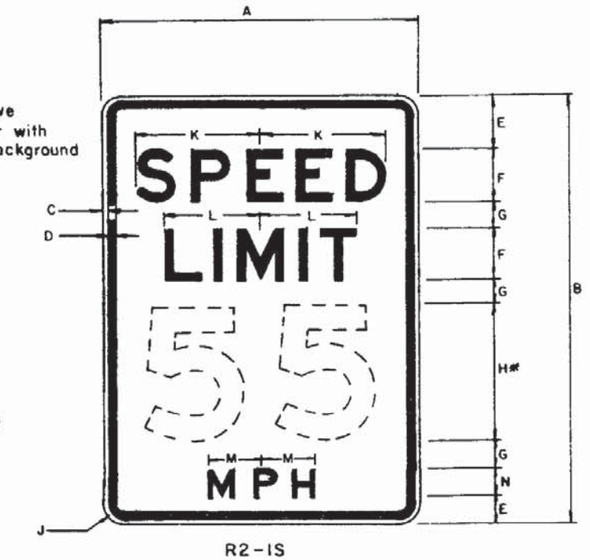

*Optically spaced at vertical ℄

R2-1S

SIGN	DIMENSIONS (INCHES)												
	A	B	C	D	E	F	G	H	J	K	L	M	N
STD	24	36	3/8	5/8	4	4E	2	10E	1 1/2	9 9/16	7 5/16	6 1/8	4E
EXPWY	36	60	5/8	7/8	7	6E	5	14E	2 1/4	14 3/8	11	9 1/8	6E
FWY	48	72	3/4	1 1/4	8	8E	6	16E	3	19 1/8	14 5/8	12 1/4	6E

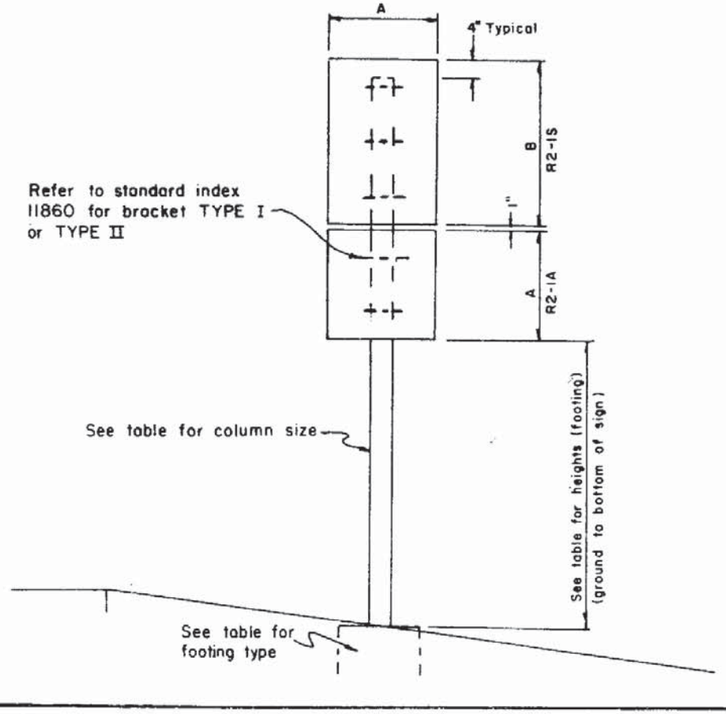

SPEED LIMIT BREAKDOWN

MPH	km/h
20	30
25	40
30	40
35	50
40	60
45	70
50	80
55	88

NOTE

In compliance with Senate Bill 306 all speed limit signs shall be installed with the metric speed limit signs mounted below. both sign panels shall be installed on the same support.

The 24", 36" and 48" signs shall be installed with the corresponding size speed limit sign

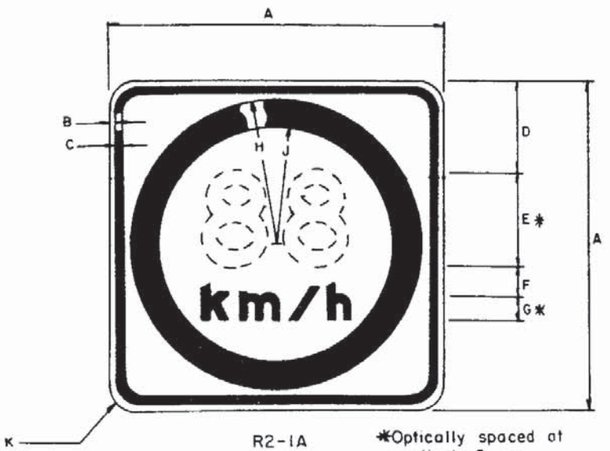

R2-1A *Optically spaced at vertical ℄

SIGN	DIMENSIONS (INCHES)									
	A	B	C	D	E	F	G	H	J	K
STD	24	3/8	5/8	7	7E	2	2	10 1/2	8 1/2	1 1/2
EXPWY	36	5/8	7/8	10	10E	3	3	15 3/4	12 3/4	2 1/4
FWY	48	3/4	1 1/4	12	12E	4	4	21	17	3

COLORS

Black non reflective legend and border, red reflective circle and white reflective background.

TABLE

COLUMN SIZE	2½ x ⅛	3 x ⅛	3½ x ⅛	4 x ⅛	4 x ¼	4½ x ¼	5 x ¼	5½ x ¼	6 x ¼	6½ x ¼	7 x ¼	7½ x ¼	8 x ¼
FOOTING	0 x 2'-3"	0 x 2'-6"	0 x 3'-4"	0 x 3'-9"	1'-6" x 2'-1"	1'-6" x 2'-5"	1'-6" x 2'-9"	1'-6" x 3'-0"	1'-6" x 3'-3"	2'-0" x 3'-0"	2'-0" x 3'-4"	2'-0" x 3'-6"	2'-0" x 4'-0"
HEIGHT (FT) GROUND TO BOTTOM OF SIGN													
60 M.P.H. WIND ZONE													
STANDARD	TO 7'	7'+-11'	11'+-18'	18'+-23'	23'+-25'								
EXPRESSWAY			TO 8'	8'+-11'	11'+-13'	13'+-17'	17'+-21'	21'+-25'					
FREEWAY				TO 6'	6'+-9'	9'+-11'	11'+-12'	12'+-16'	16'+-19'	19'+-23'	23'+-25'		
70 M.P.H. WIND ZONE													
STANDARD		TO 8'	8'+-14'	14'+-17'	17'+-22'	22'+-26'	26'+-29'						
EXPRESSWAY				TO 8'	8'+-11'	11'+-12'	12'+-15'	15'+-19'	19'+-23'	23'+-25'			
FREEWAY						TO 8'	8'+-11'	11'+-12'	12'+-14'	14'+-17'	17'+-20'	20'+-23'	23'+-25'
80 M.P.H. WIND ZONE													
STANDARD		TO 6'	6'+-12'	12'+-14'	14'+-17'	17'+-21'	21'+-25'						
EXPRESSWAY					TO 8'	8'+-11'	11'+-12'	12'+-14'	14'+-18'	18'+-21'	21'+-25'		
FREEWAY							TO 7'	7'+-10'	10'+-11'	11'+-12'	12'+-15'	15'+-18'	18'+-21'
90 M.P.H. WIND ZONE													
STANDARD			TO 10'	10'+-12'	12'+-14'	14'+-17'	17'+-21'	21'+-25'					
EXPRESSWAY						TO 8'	8'+-11'	11'+-12'	12'+-14'	14'+-17'	17'+-20'	20'+-23'	23'+-25'
FREEWAY								TO 7'	7'+-9'	9'+-11'	11'+-12'	12'+-13'	13'+-16'
			Frangible supports Driven into ground		Breakaway supports Poured concrete footings								

Work this sheet with the "Single Column Ground Signs" Standards, Index 11860 through 11864

REVISIONS		
DATE	INITIALS	DESCRIPTIONS

SPECIAL SPEED LIMIT SIGNS Km/h and MPH

FLORIDA DEPARTMENT OF TRANSPORTATION
TRAFFIC DESIGN

SPECIAL SIGN DETAILS

	INITIALS	DATES
DETAILED BY	K.R.	7-83
CHECKED BY	C.S.	7-83
QUANTITIES BY		
CHECKED BY		
SUPERVISED BY	C.S.	7-83

Approved by _____ STATE DESIGN ENGINEER - RDWY

Drawing No. 4 OF 4

Index No. 17355

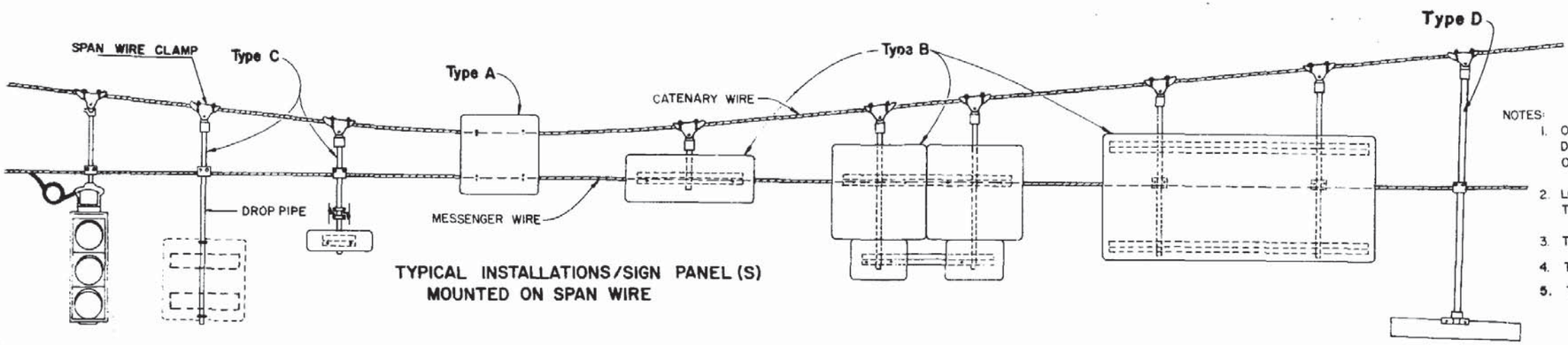

TYPICAL INSTALLATIONS/SIGN PANEL (S) MOUNTED ON SPAN WIRE

NOTES:

1. OTHER METHODS FOR ATTACHMENT OF THE SIGN TO THE DROP PIPE MAY BE APPROVED BY TALLAHASSEE TRAFFIC OPERATIONS.
2. LOWER ELEVATIONS OF SIGNS SHALL BE APPROXIMATELY THE SAME.
3. TYPE A SHALL BE USED FOR CENTER SIGN OF SPAN ONLY.
4. TYPE A SHALL NOT HAVE WIND BEAMS
5. TYPE B & C SHALL HAVE WIND BEAMS

DETAIL/SIGN CLAMP

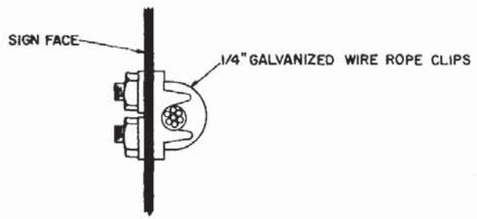

DETAIL/OPPOSING SIGNS ON SINGLE DROP PIPE

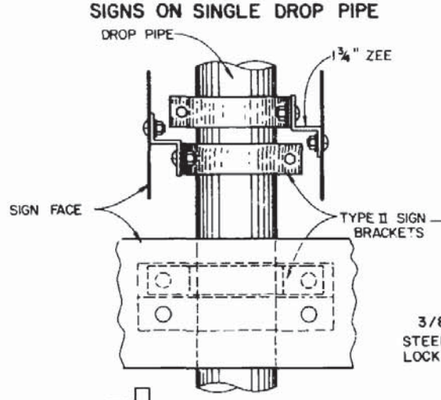

DETAIL / SINGLE PANEL ON DROP PIPE AND SPAN WIRE

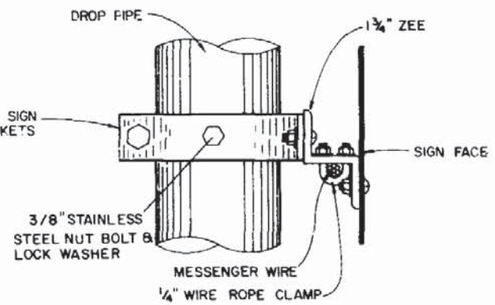

DETAIL / ATTACHMENT OF DROP PIPE TO MESSENGER WIRE

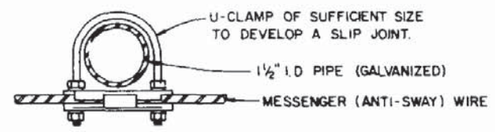

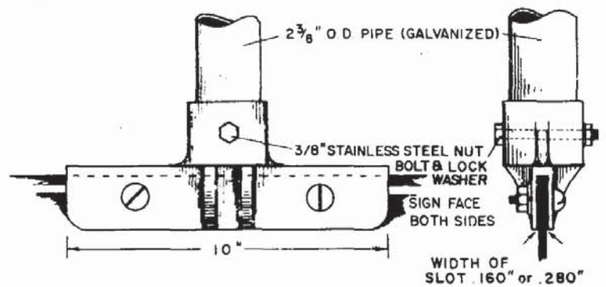

DETAIL / SIGN FACE ON BOTH SIDES OF DROP PIPE

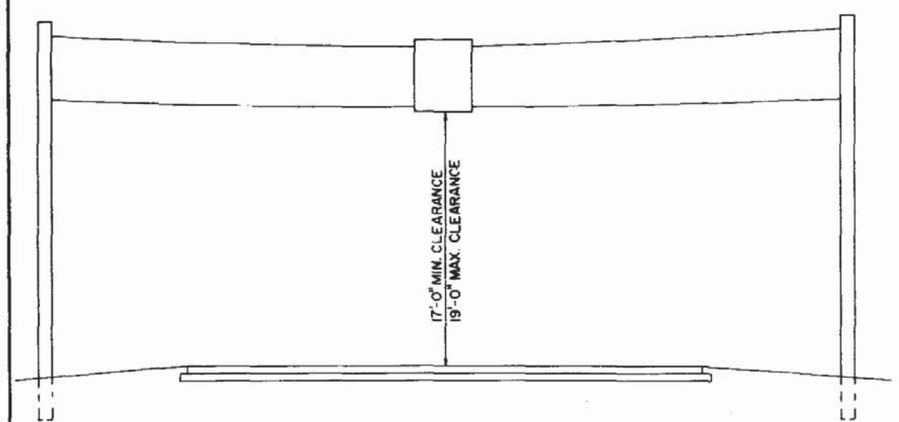

TYPICAL SPAN WIRE INSTALLATION

DETAIL / OPPOSING SIGNS SPAN WIRE MOUNTED

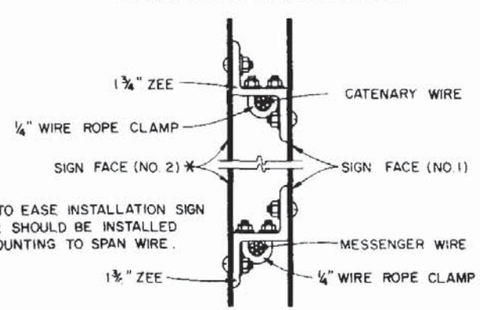

* IN ORDER TO EASE INSTALLATION SIGN FACE NO. 2 SHOULD BE INSTALLED AFTER MOUNTING TO SPAN WIRE.

DETAIL / SINGLE PANEL ON DPOP PIPE

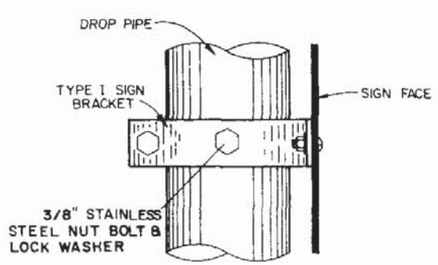

FLORIDA DEPARTMENT OF TRANSPORTATION
TRAFFIC DESIGN
SPAN WIRE MOUNTING DETAILS

REVISIONS			INITIALS	DATES
Dates	Descriptions	Detailed by	T.L	12-14-76
8-80	Delete Structure Details & Notes. Add Mounting Details.	Checked by	K.R	12-14-76
		Quantities by		
		Checked by		
9-85	Changed to 10" on detail	Supervised by	K.R	

Approved by _____ STATE DESIGN ENGINEER-RDWY

DRAWING NO. 1 OF 1

INDEX NO 17356

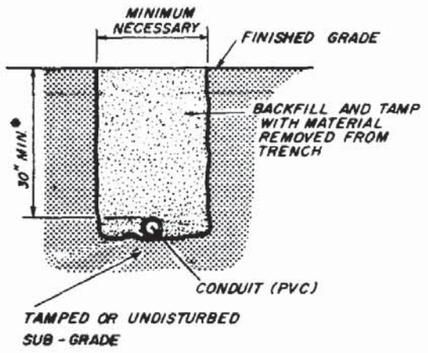

FIGURE - A

FOR USE IN AREAS NOT EXPOSED TO VEHICULAR TRAFFIC AND UNDER DRIVEWAYS

* MAY BE ADJUSTED IN FIELD DUE TO FIELD CONDITIONS UPON APPROVAL OF PROJECT ENGINEER.

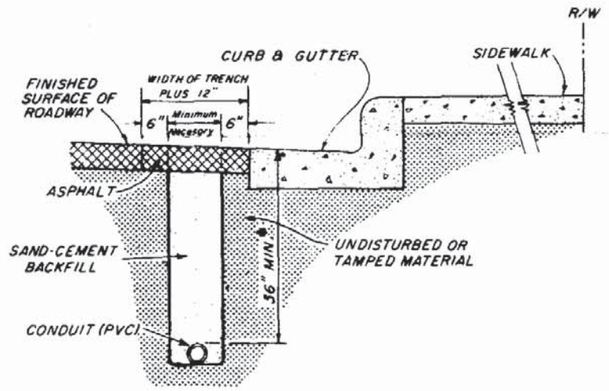

FIGURE - B

FOR USE IN ASPHALT ROADWAY ADJACENT TO GUTTER WHEN PLACEMENT OUTSIDE OF THE PAVEMENT IS NOT FEASIBLE.

NOTE:

1. TRENCH NOT TO BE OPEN MORE THAN 250' AT A TIME WHEN CONSTRUCTION AREA IS SUBJECT TO VEHICULAR OR PEDESTRIAN TRAFFIC.
2. ASPHALT TO BE SAWCUT AND REMOVED TO LEAVE NEAT LINES ON BOTH SIDES OF THE 12" PAVEMENT CUT.
3. SEE NOTE 3 FIGURE C.

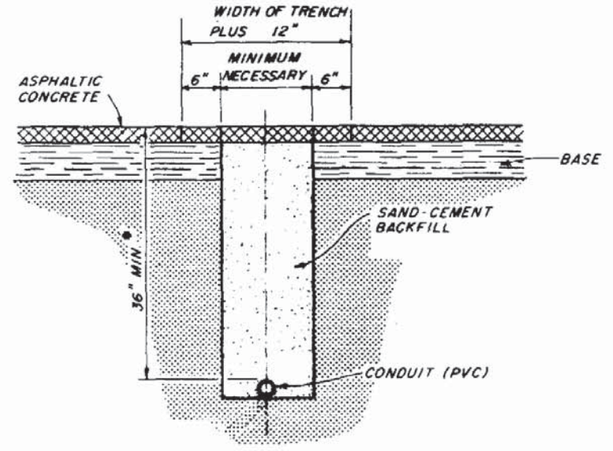

FIGURE - C

FOR USE IN INSTALLING CONDUIT UNDER EXISTING ASPHALT PAVEMENT NOT ADJACENT TO GUTTER WHEN JACKING IS NOT FEASIBLE

NOTE:

1. RIGID CONDUIT MUST BE USED WHEN JACKING UNDER EXISTING PAVEMENT AT 3 FT MINIMUM DEPTH.
2. ASPHALT TO BE SAWCUT AT THE EDGES OF THE TRENCH.
3. THE REMOVAL AND REPLACEMENT OF THE ADDITIONAL PAVEMENT WIDTH (6") WILL NOT BE REQUIRED WHEN THE TRENCH CAN BE CONSTRUCTED WITHOUT DISTURBING THE ASPHALT SURFACE ON EITHER SIDE.

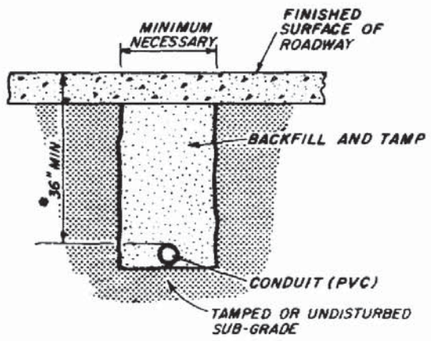

FIGURE - D

FOR USE INSTALLING CONDUIT UNDER A NEW ROADWAY PRIOR TO INSTALLATION OF CURBS, BASE AND PAVEMENT

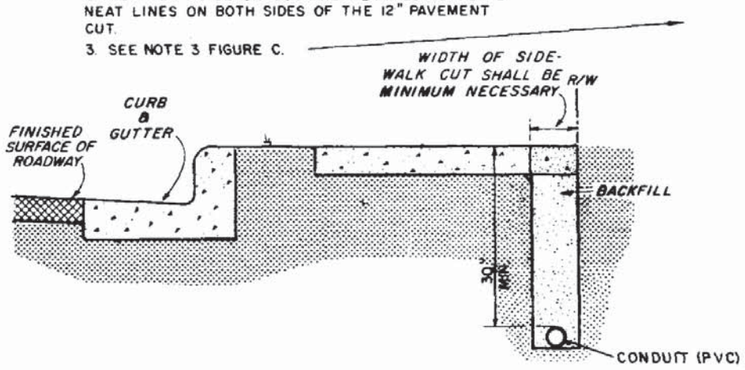

FIGURE - E

FOR USE IN INSTALLING CONDUIT UNDER SIDEWALK

NOTE:

1. SIDEWALK PATCHES TO MATCH EXISTING JOINTS.
2. ENTIRE SIDEWALK SLAB MUST BE REPLACED WHEN SPECIFIED IN THE PLANS.
3. BACKFILL AND TAMP WITH MATERIAL FROM TRENCH EXCEPT AT DRIVEWAYS. AT DRIVEWAYS, BACKFILL A LENGTH OF TRENCH WITHIN THE DRIVEWAY ENTIRELY WITH CLASS I CONCRETE.

REVISIONS			REVISIONS				INITIALS	DATES
DATE	INITIALS	DESCRIPTION	DATE	INITIALS	DESCRIPTION	Designed by	CG	2-26-75
7-13-83	CEB	CHANGED CONDUIT DEPTH IN FIGURE - E	4-6-76	CG	ADDITION TO GENERAL NOTE NO. 6 NOTE NO. 3 ON FIGURE E REVISED	Checked by	RK	2-26-75
			8-78	CG	NOTE ADDED, REVISED GENERAL NOTES 1 & 2. REVISED TITLE BLOCK	Quantities by		
			10-31-79	JMC	CHANGED AND REVISED NOTES 2 & 3, DELETED ITEM NOS. AND GROUND ROD IN PULL BOX.	Checked by		
			08-19-80	JMC	DELETED FIGURE "F" & GENERL NOTES.	Supervised by		
			09-02-80	JMC	DELETED GROUND WIRE WITH CONDUIT			

FLORIDA DEPARTMENT OF TRANSPORTATION
TRAFFIC DESIGN

CONDUIT INSTALLATION DETAILS

Approved by _____
STATE DESIGN ENGINEER - RDWY

DRAWING NO.	INDEX NO.
1 OF 2	17721

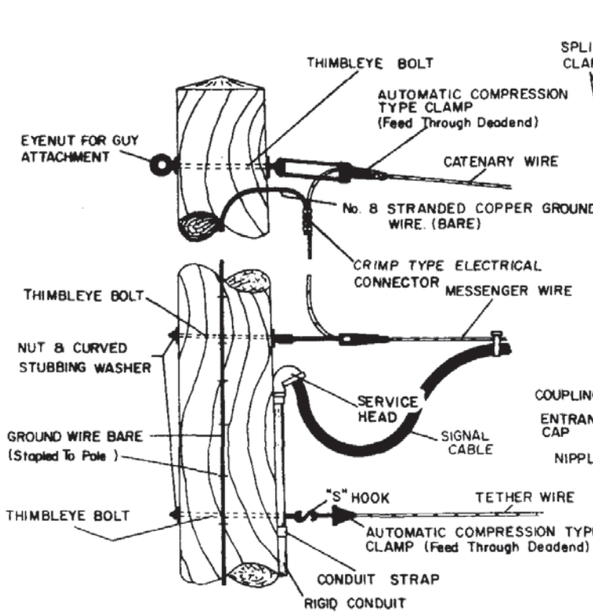

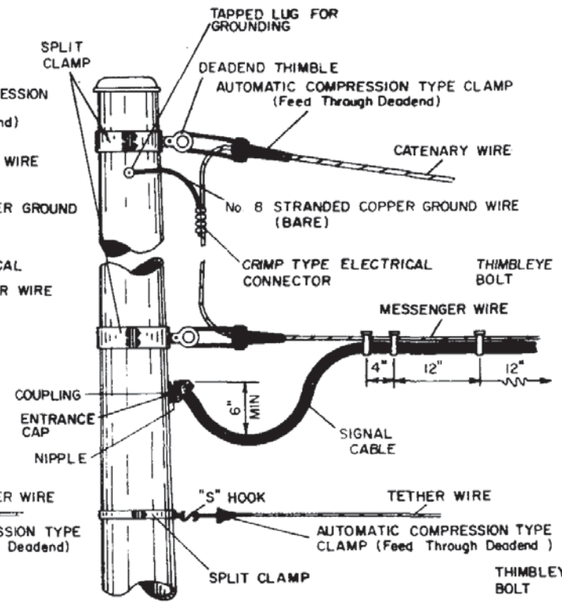

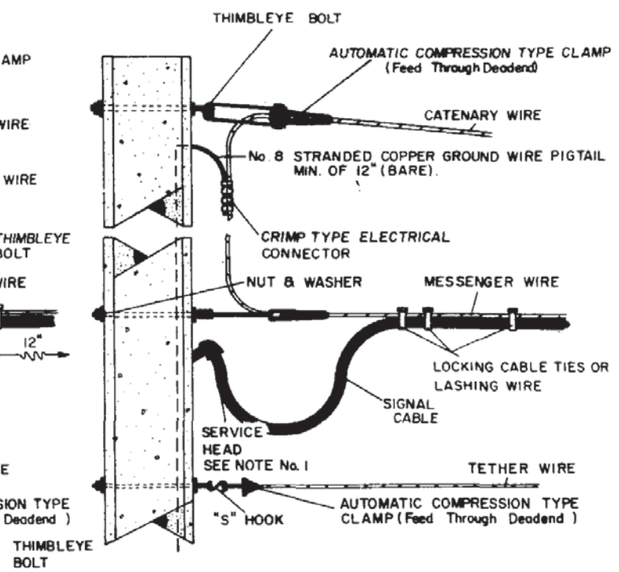

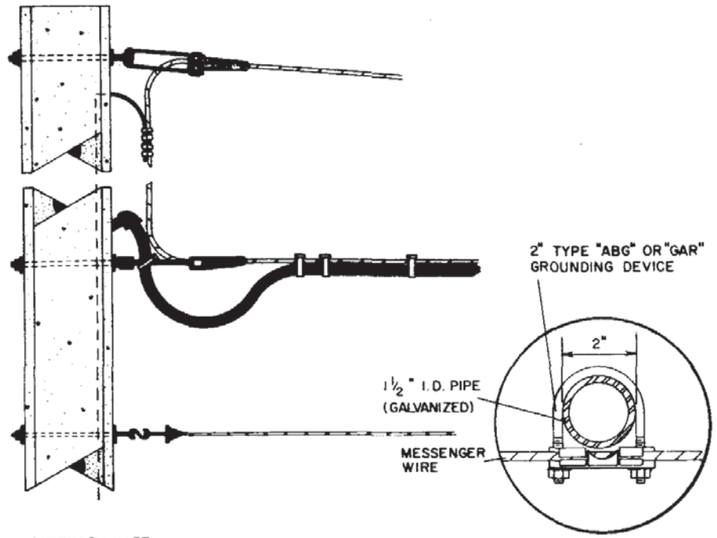

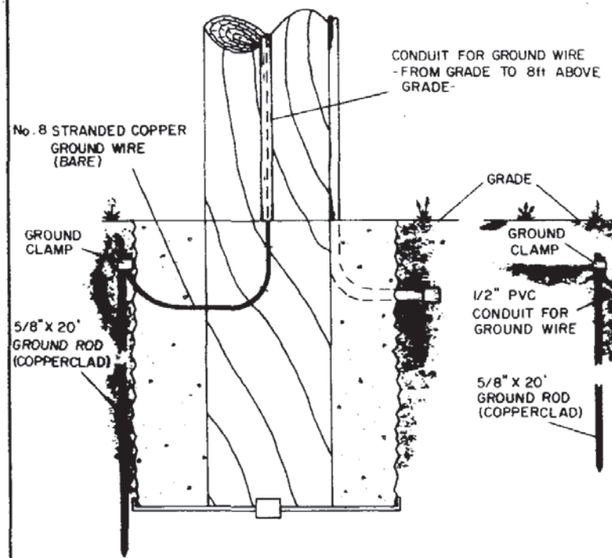

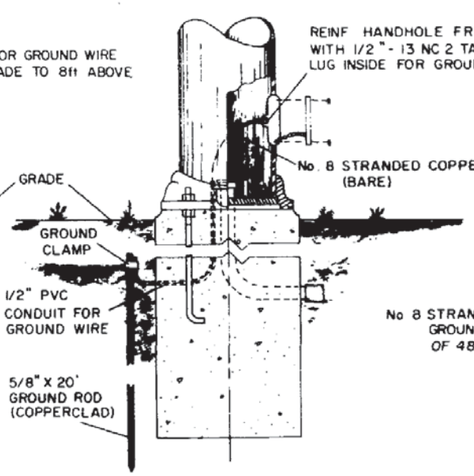

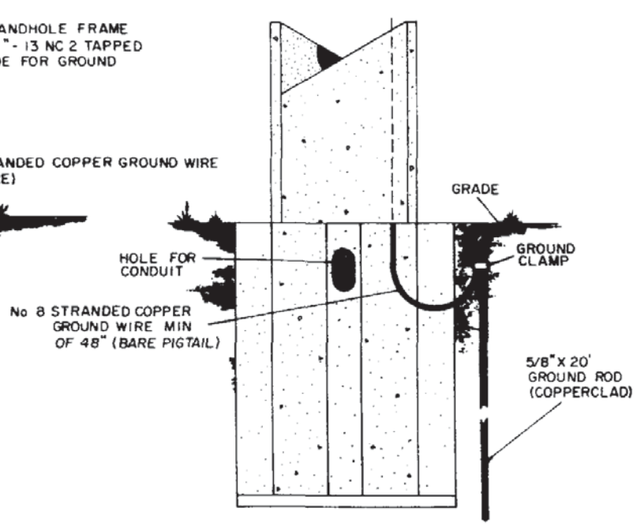

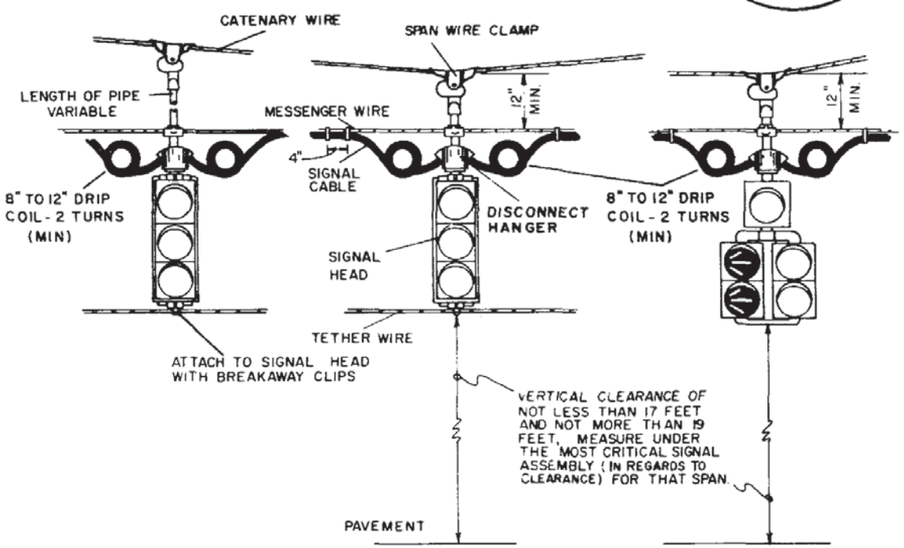

NOTE

1 THE SERVICE HEAD HOLE FOR JOINT USE POLES MAY BE DRILLED BY THE UTILITY COMPANY AT AN ANGLE OF 90° BUT NOT LESS THAN 45° TO THE FACE OF THE POLE

2 LASHING WIRE SHOULD NORMALLY BE USED FOR DISTANCES OF 12' FEET OR GREATER.

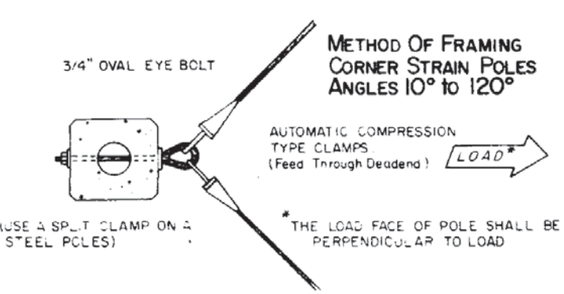

METHOD OF FRAMING CORNER STRAIN POLES ANGLES 10° to 120°

REVISIONS		
DATE	INITIALS	DESCRIPTION
9-7-83	LW	ADDED LASHING WIRE NOTE, CHANGE DRIP COIL

FLORIDA DEPARTMENT OF TRANSPORTATION
TRAFFIC DESIGN

SIGNAL CABLE & SPAN WIRE INSTALLATION DETAILS

	INITIALS	DATES	
Regrawn By	Mick	09-10-80	Approved by [signature]
			STATE DESIGN ENGINEER - RDWY
Supervised by			DRAWING NO. 1 OF 1 — INDEX NO. 17727

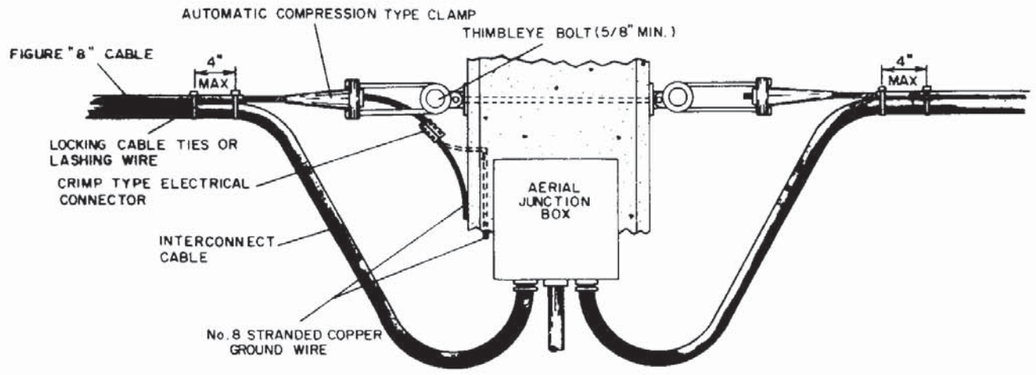

FIGURE A
CABLE DROP AND TERMINATION DETAIL
AERIAL INTERCONNECT FIGURE

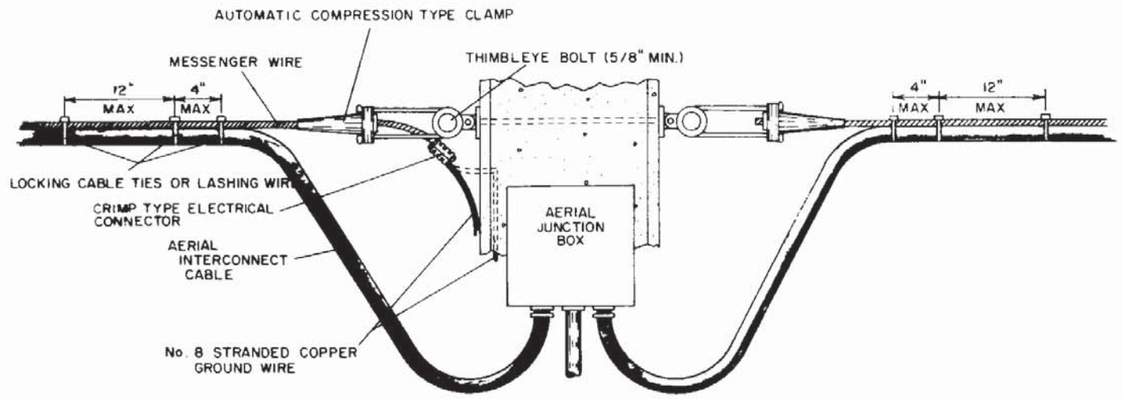

FIGURE B
CABLE DROP AND TERMINATION DETAIL
AERIAL INTERCONNECT MESSENGER WIRE WITH CLAMPS

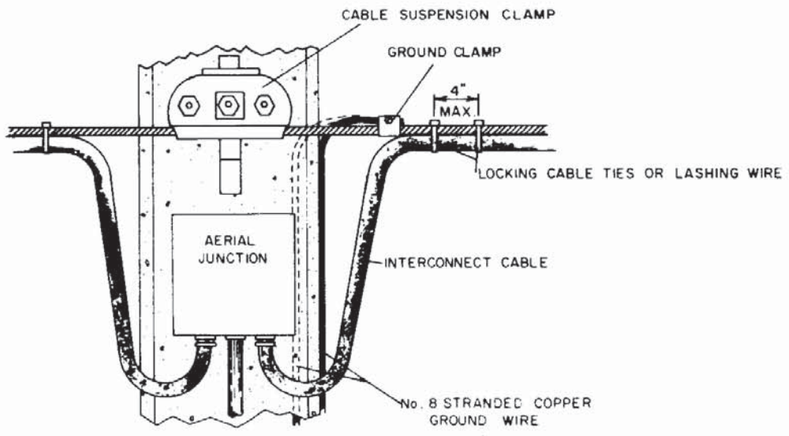

FIGURE C
CABLE DROP DETAIL
AERIAL INTERCONNECT MESSENGER WIRE WITH CLAMPS

NOTES:

1. THE MESSENGER WIRE OF THE INTERCONNECT CABLES SHALL BE GROUNDED TO THE COPPER GROUND WIRE OF THE POLE OR TO THE EXTERNAL WIRE EXTENDING DOWN THE POLE.
2. WHEN UTILIZING THE EXTERNAL GROUND WIRE TO THE POLE, A PIECE OF 1/2" RIGID CONDUIT SHALL EXTEND UP THE POLE EXTERNALLY TO A POINT EIGHT (8) FEET ABOVE FINISH GRADE TO PROTECT THE GROUND WIRE CONNECTING THE MESSENGER WIRE TO THE GROUND ROD.
3. LOCKING CABLE TIES OR LASHING WIRE WHEN USED SHALL BE PLACED NO FURTHER THAN ONE (1) FOOT APART EXCEPT AT THE POINT OF CABLE DROP OR TERMINATIONS WHERE ONE (1) SHALL BE PLACED AT THE POINT WHERE THE CABLES SEPARATE FROM THE MESSENGER WIRE AND ANOTHER PLACED FOUR (4) INCHES (MAX) FROM THAT TIE. WHEN USING FIGURE "8" INTERCONNECT CABLE ONLY THE LOCKING CABLE TIES SHALL BE USED.
4. IF ACCESSIBLE THE INTERNAL GROUND WIRE OF THE SUPPORT POLE MAY BE USED TO GROUND THE MESSENGER WIRE.
5. LASHING WIRE SHOULD NORMALLY BE USED FOR DISTANCES OF 12 FEET OR GREATER.

FLORIDA DEPARTMENT OF TRANSPORTATION
TRAFFIC DESIGN

AERIAL INTERCONNECT

REVISIONS				INITIALS	DATES
DATE	INITIALS	DESCRIPTION	Redrawn by	Mick	09-12-80
9-7-83	LW	ADDED LASHING WIRE NOTES			
			Supervised by		

Approved by _____
STATE DESIGN ENGINEER-RDWY

DRAWING NO. 1 OF 1 | INDEX NO. 17733

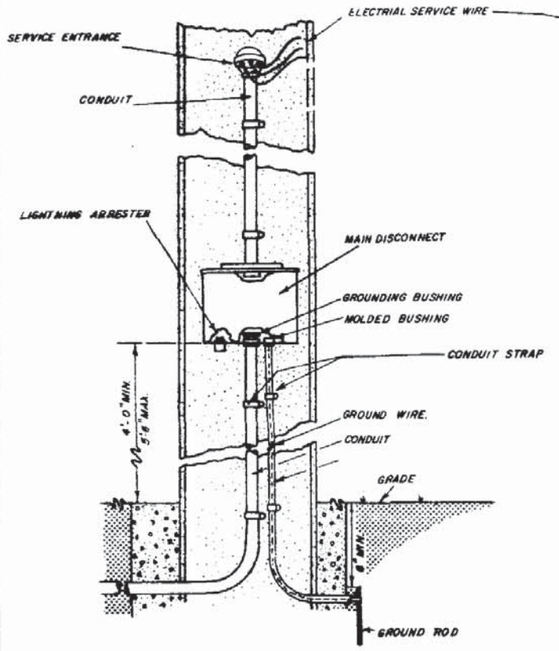

FIGURE A
AERIAL FEED
(NO METER USED)

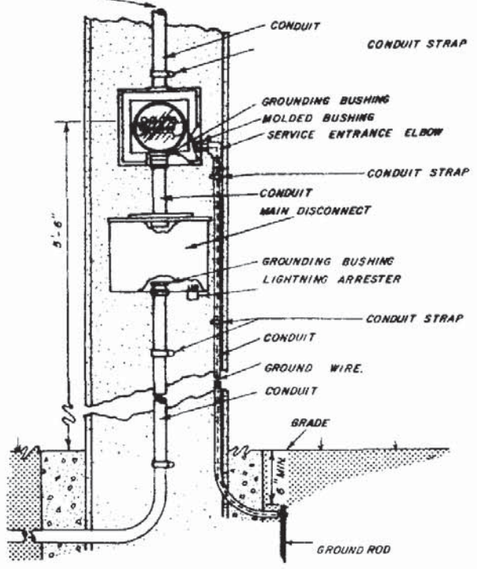

FIGURE B
AERIAL FEED
(METER USED)

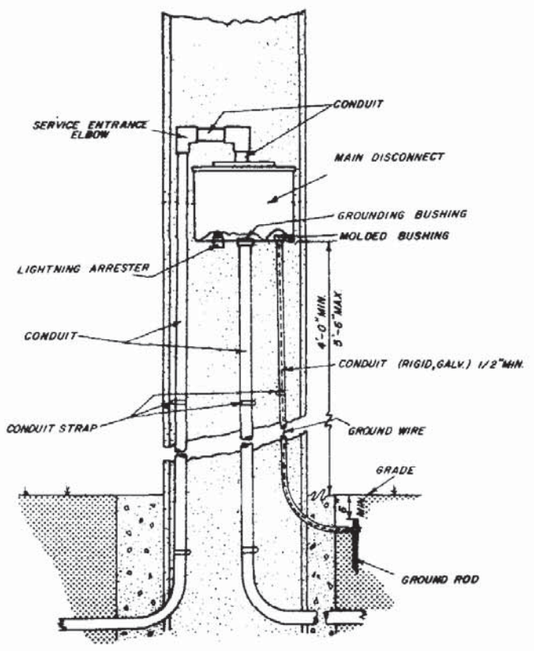

FIGURE C
UNDERGROUND FEED
(NO METER USED)

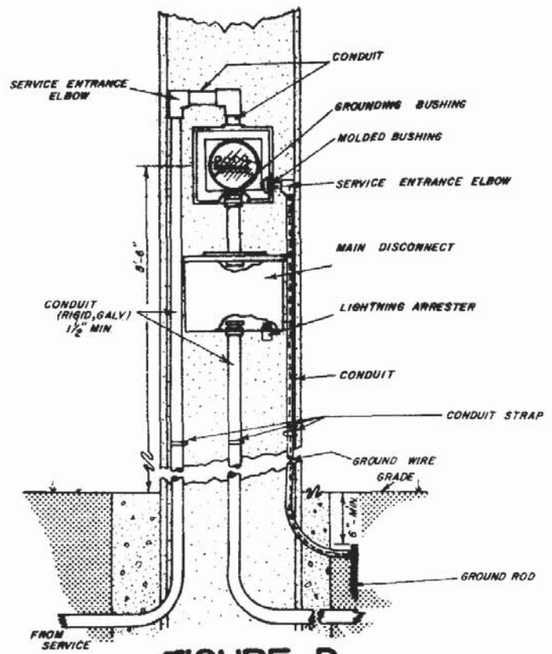

FIGURE D
TYPE "B" UNDERGROUND FEED
(METER USED)

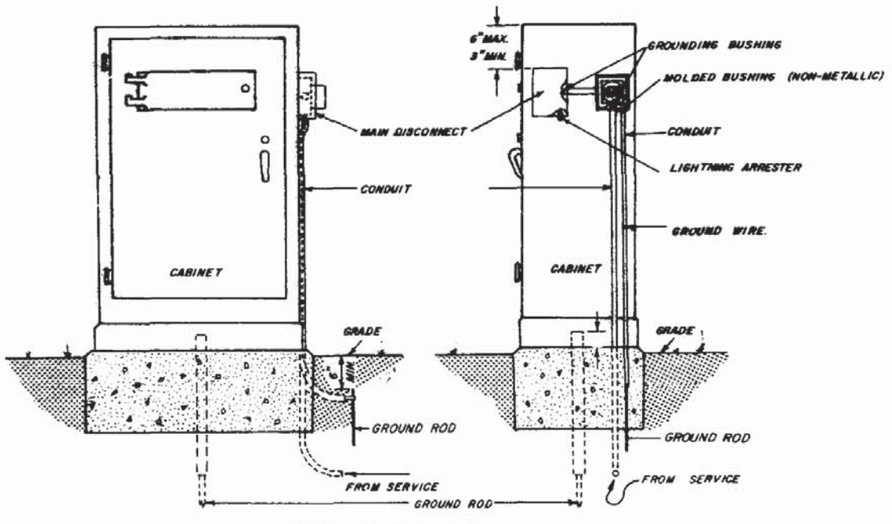

FIGURE E
UNDERGROUND CABINET MOUNTED
(METER USED)

FLORIDA DEPARTMENT OF TRANSPORTATION TRAFFIC DESIGN				
ELECTRIC POWER SERVICE				
	INITIALS	DATES	Approved by _____ STATE DESIGN ENGINEER – RDWY	
Redrawn by	Mick	09-22-80		
Supervised by	J.R.M.		DRAWING NO. 1 OF 1	INDEX NO. 17736

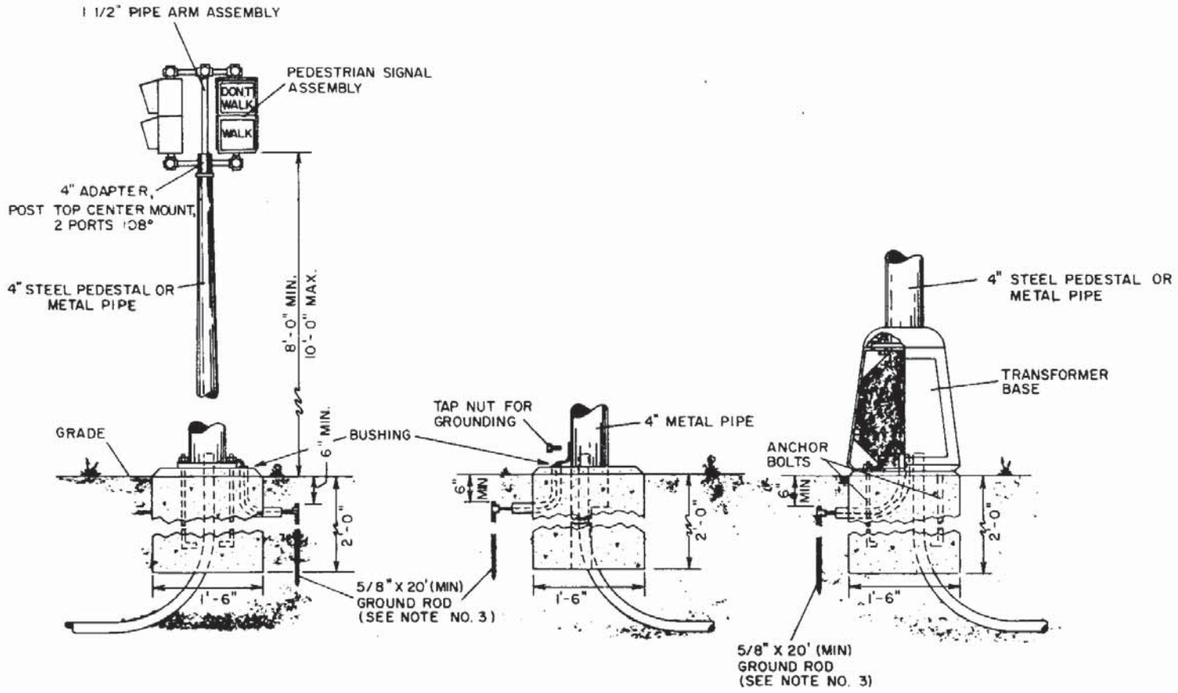

FIGURE A

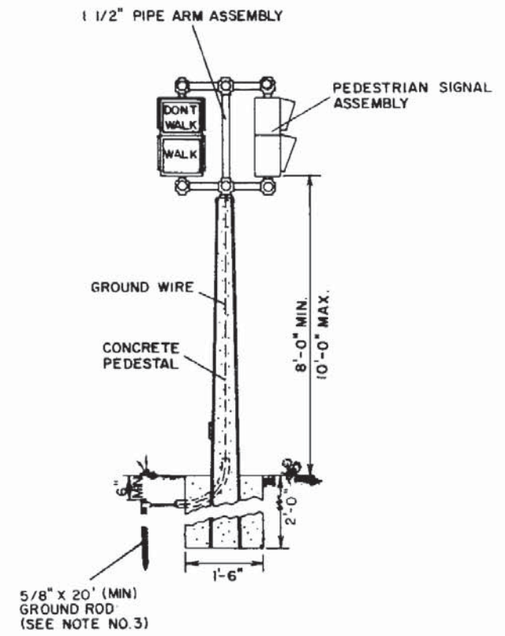

FIGURE B

NOTES:

1. AS AN OPTION, THE CONTRACTOR WILL BE ALLOWED TO INSTALL PEDESTRIAN SIGNALS ON CONCRETE POLES AND PEDESTALS WITH THE USE OF LEAD ANCHORS (TWO BOLTS SAME SIZE PER HUB.) IN LIEU OF THE STANDARD STEEL BANDS.
2. HOLES DRILLED OR PUNCHED IN METAL POLES OR PEDESTALS SHALL BE THOROUGHLY REAMED, CLEANED OF ALL BURRS AND COVERED WITH TWO (2) COATS OF ZINC RICH PAINT. AS SPECIFIED IN THE STANDARD SPICIFICATIONS FOR ROAD AND BRIDGE CONSTRUCTIONS. GROMMETS OR BUSHINGS SHALL BE INSTALLED IN HOLES.
3. GROUNDING TO BE IN ACCORDANCE WITH SECTION 620 OF THE STANDARD SPECIFICATIONS.

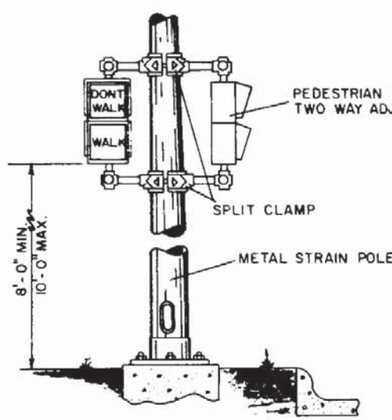

FIGURE C

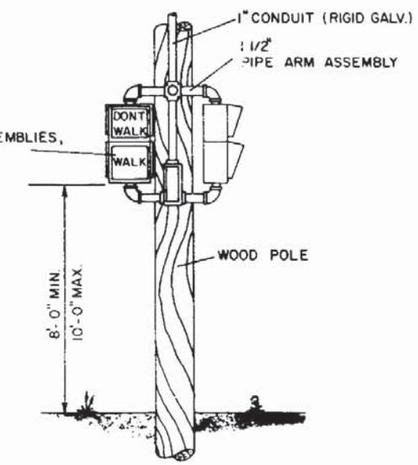

FIGURE D

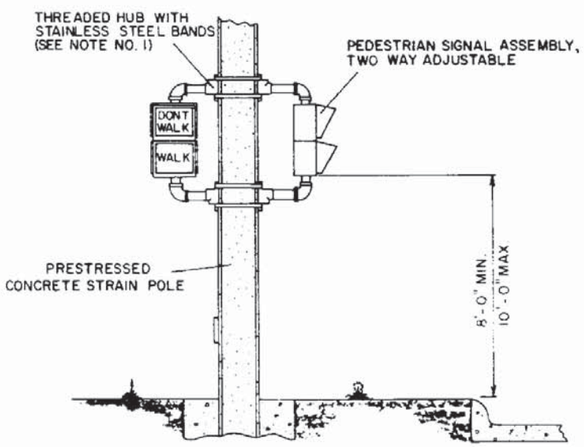

FIGURE E

FLORIDA DEPARTMENT OF TRANSPORTATION TRAFFIC DESIGN			
PEDESTRIAN CONTROL SIGNALS INSTALLATION DETAIL			
	INITIALS	DATES	
Redrawn by	Mick	09-15-80	Approved by: STATE DESIGN ENGINEER-RDWY.
Supervised by		DRAWING NO. 1 OF 1	INDEX NO. 17764

DETAILS FOR SPLICING LOOP WIRE TO LEAD-IN WIRE

STEP 1

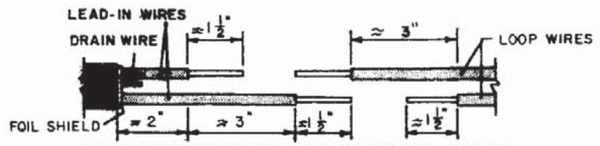

STRIP LOOP AND LEAD-IN CABLE CONDUCTORS. IF HEAT SHRINKABLE SILICONE LINED, CROSS LINKED POLY-ETHYLENE INSULATING TUBING IS TO BE USED, SLIP TUBING OVER LEAD-IN CABLE AND INDIVIDUAL CONDUCTORS.

STEP 2



TWIST THE BARE CONDUCTORS TOGETHER.

CRIMP THE BARE CONDUCTORS TOGETHER WITH AN UNINSULATED BUTT CONNECTOR.

STEP 3



SOLDER EACH SPLICE USING RESIN-CORE SOLDER.

SOLDER EACH SPLICE USING RESIN-CORE SOLDER.

STEP 4



WRAP EACH SPLICE WITH SILICONE TAPE. HALF LAP STARTING AT CENTER OF SPLICE AND PROCEEDING TO THE RIGHT (OR LEFT) ≈¾" PAST END OF SPLICE, THEN PROCEEDING TO THE LEFT (OR RIGHT) ≈¾" PAST OTHER END OF SPLICE, AND RETURNING TO CENTER. WRAP EACH SPLICE, WITH AN ALL WEATHER, HEAVY DUTY ELECTRICAL TAPE IN THE SAME MANNER ≈¾" PAST EACH END OF SILICONE TAPE.

SLIDE HEAT SHRINKABLE TUBING OVER SPLICES. THE TUBING SHALL COVER ≈1" OF CONDUCTOR INSULATION AT EACH END OF SPLICE. HEAT TUBING AS SPECIFIED BY MANUFACTOR.

STEP 5

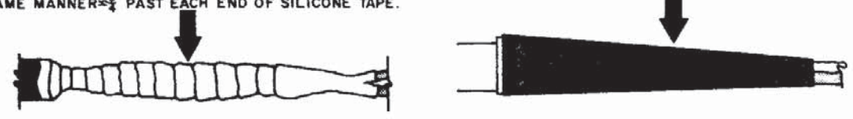

HALF LAP THE TWO SPLICES TOGETHER WITH AN ALL WEATHER HEAVY DUTY ELECTRICAL TAPE ≈1" PAST THE END OF THE LEAD-IN CABLE OUTSIDE COVER AND ≈1" PAST FATHER MOST WRAP OF STEP 4.

SLIDE OUTER HEAT SHRINKABLE TUBING OVER ENTIRE SPLICE AREA. THE TUBING SHALL COVER ≈1½" OF THE LEAD-IN CABLE OUTSIDE COVER AND ≈1" OF THE LOOP CONDUCTOR INSULATION.

TWISTED PAIR AND LOOP LEAD-IN INSTALLATION WITH CURB & GUTTER

ALTERNATIVE 1

DRILL A HOLE THROUGH THE CURB AT THE POINT WHICH THE REQUIRED SAW CUT DEPTH IS OBTAINED JUST PRIOR TO CUTTING THE TOP INSIDE EDGE OF THE CURB. SLIDE A SECTION OF FLEXIBLE CONDUIT AT LEAST 6" INTO THE HOLE FROM THE BACK SIDE OF THE CURB BUT NOT WITHIN 2" OF THE TOP OF THE HOLE. THE CONDUIT SHALL FIT SNUG WITHIN THE DRILLED HOLE. FILL THE TOP OF THE HOLE WITH LOOP SEALANT TO THE LEVEL OF THE CURB SURFACE. A NONMETALIC MATERIAL SHOULD BE USED TO PREVENT EXCESSIVE LOOP SEALANT FROM ENTERING THE FLEXIBLE CONDUIT.

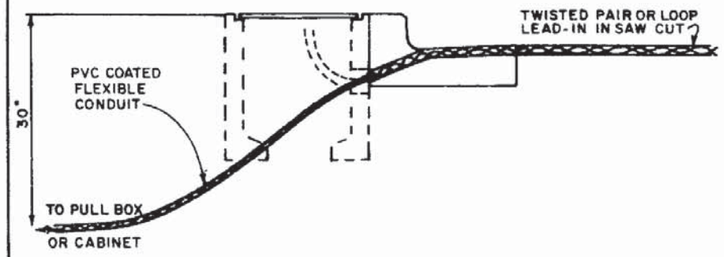

ALTERNATIVE 2

DRILL A HOLE, ½" TO 1" LARGER IN DIAMETER THAN THE RIGID CONDUIT TO BE USED, THROUGH THE ROADWAY ASPHALT (OR CONCRETE) SURFACE AND BASE AT AN APPROPRIATE ANGLE TO INTERCEPT THE TRENCH OR PULL BOX HOLE. PLACE A PREDETERMINED LENGTH OF RIGID CONDUIT IN THE HOLE AND DRIVE THE CONDUIT INTO THE TRENCH OR HOLE. INSTALL A MOLDED BUSHING (NONMETALLIC) ON THE ROADWAY END OF THE RIGID CONDUIT. THE TOP OF THE RIGID CONDUIT SHALL BE APPROXIMATELY 2" BELOW THE ROADWAY SURFACE. FILL THE HOLE WITH LOOP SEALANT TO THE LEVEL OF THE ROADWAY SURFACE. A NONMETALLIC MATERIAL SHOULD BE USED TO PREVENT EXCESSIVE LOOP SEALANT FROM ENTERING THE RIGID CONDUIT.

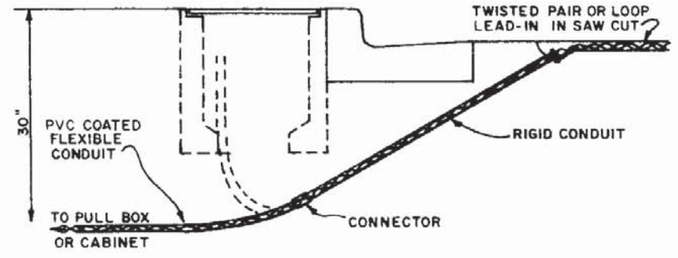

NOTE ✱

OTHER ALTERNATIVES MAY BE APPROVED BY THE STATE TRAFFIC OPERATIONS ENGINEER

TWISTED PAIR AND LOOP LEAD-IN INSTALLATION WITHOUT CURB & GUTTER

CUT A SLOT IN THE EDGE OF THE ROADWAY OF SUFFICIENT SIZE AND DEPTH TO SNUGLY PLACE THE END OF THE FLEXIBLE CONDUIT. THE END OF THE CONDUIT SHALL BE AT LEAST 6" INTO THE ROADWAY AND ≈2" BELOW THE TOP OF THE ROADWAY SURFACE. THE DEPARTURE ANGLE OF THE CONDUIT FROM THE ROADWAY SHALL BE 30° TO 45°.

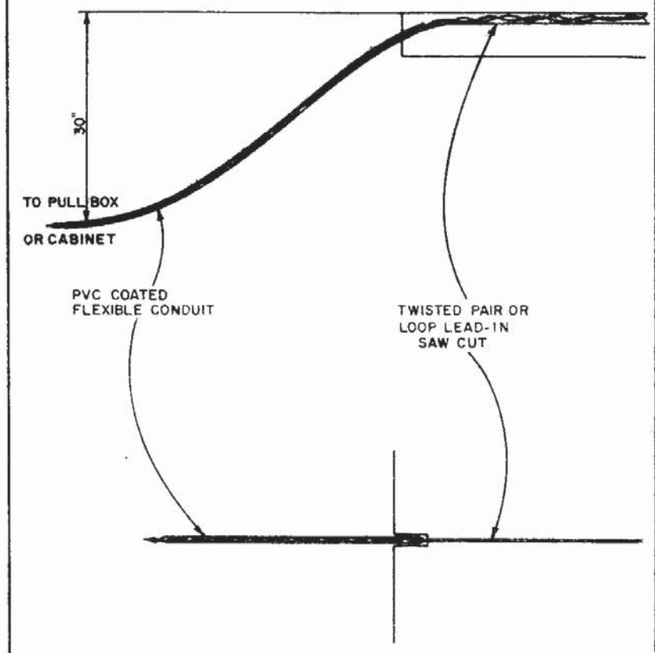

NOTE ✱

OTHER ALTENATIVES MAY BE APPROVED BY THE STATE TRAFFIC OPERATIONS ENGINEER.

GENERAL NOTES

1. IF THE LOOP LEAD-IN IS 75' OR LESS FROM THE EDGE OF THE LOOP TO THE DETECTOR OR CONTROLLER CABINET, CONTINUE THE TWISTED PAIR TO THE CABINET. IF THE LOOP LEAD-IN IS GREATER THAN 75', CONTINUE THE TWISTED PAIR TO THE SPECIFIED PULL BOX, SPLICE TO SHIELDED LEAD-IN WIRE AND CONTINUE TO THE DETECTOR OR CONTROLLER CABINET. (THIS NOTE DOES NOT APPLY TO TYPE H).
2. THE MAXIMUM SAW CUT DEPTH SHALL BE 1½" ON RESURFACING OR NEW ROADWAY CONSTRUCTION PROJECTS REQUIRING LOOP INSTALLATIONS, LOOP AND LEAD-INS MAY BE INSTALLED IN THE ASPHALT BASE PRIOR TO THE PLACEMENT OF THE FINAL ASPHALT WEARING SURFACE, PROVIDED THAT THE BOTTOM OF THE LOOP WIRE IS NOT GREATER THAN 2" BELOW THE FINAL WEARING SURFACE.
3. THE WIDTH OF SAW CUTS SHALL BE SUFFICIENT TO ALLOW UNFORCED PLACEMENT OF LOOP WIRES OR LEAD-INS INTO THE SAW CUT BUT NOT GREATER THAN ¾"
4. A NONMETALLIC HOLD DOWN MATERIAL SHALL BE USED TO SECURE LOOP WIRES AND LEAD-INS TO THE BOTTOM OF SAW CUTS. HOLD DOWN MATERIAL SHALL BE PLACED AT APPROXIMATELY ONE FOOT INTERVALS AROUND LOOPS AND TWO FOOT INTERVALS ON LEAD-INS
5. A MINIMUM COVER OF ¾" TO 1" OF SEALANT MATERIAL SHALL BE PROVIDED IN THE SAW CUT BETWEEN THE UPPER MOST LOOP WIRE OR LEAD-IN AND THE ROADWAY WEARING SURFACE EXCLUDING THE OVERLAY.
6. THE MINIMUM DISTANCE BETWEEN THE TWISTED PAIRS OF LOOP LEAD-IN WIRE IS 6" FROM EDGE OF CURB OR ROADWAY TO LOOP.

REVISIONS		
DATE	INITIALS	DESCRIPTION
06-16-80	J. M. C	Revised General Notes 4 & 6
08-24-81	J.M.C	Revised Notes 5 & 6, Added PVC Coated

FLORIDA DEPARTMENT OF TRANSPORTATION
TRAFFIC DESIGN

VEHICLE LOOP INSTALLATION DETAILS

	INITIALS	DATES
Designed by		
Checked by		
Quantities by		
Checked by		
Supervised by		

Approved by _____
STATE DESIGN ENGINEER - RDWY.

DRAWING NO. 1 of 2

INDEX NO. 17781

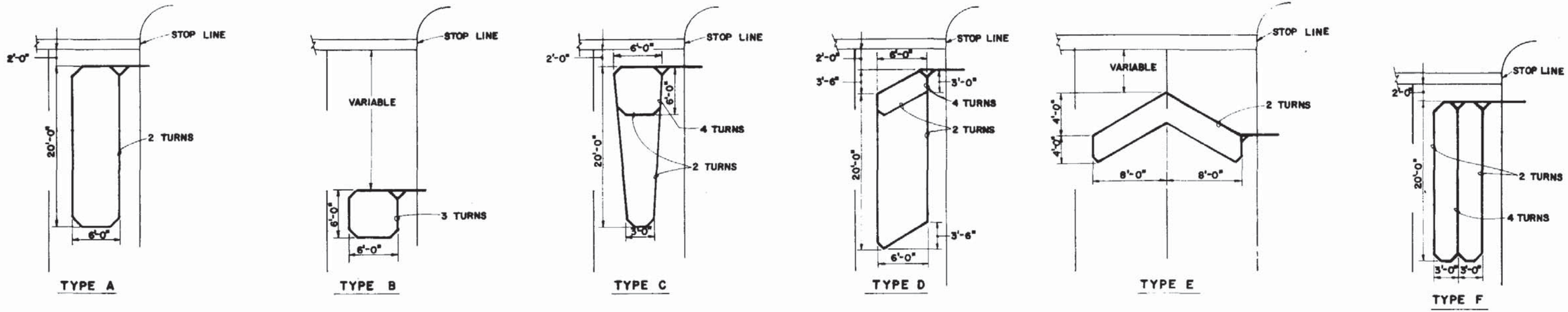

NOTE: LOOP CONDUCTORS MUST FOLLOW SAW CUT TO BOTTOM FORMING SLACK SECTION AT JOINT.

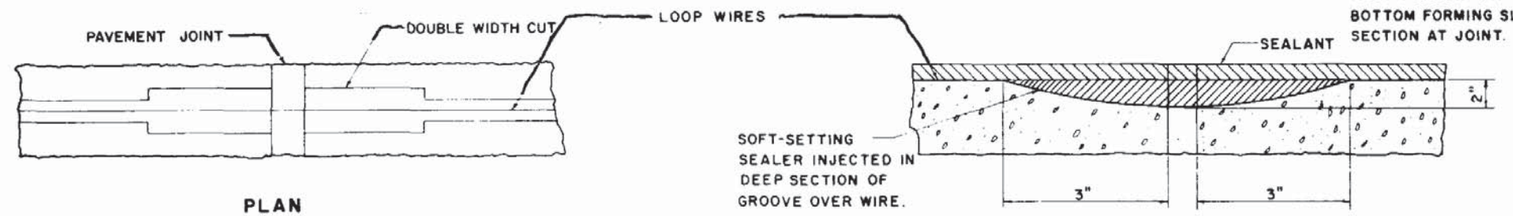

PLAN

VERTICAL SECTION

CONCRETE PAVEMENT EXPANSION JOINTS

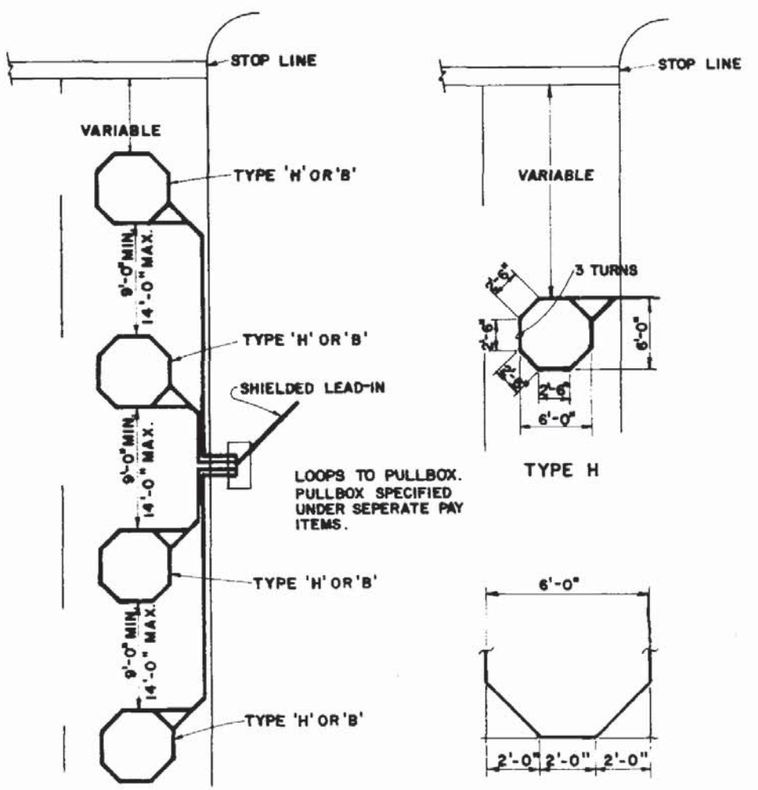

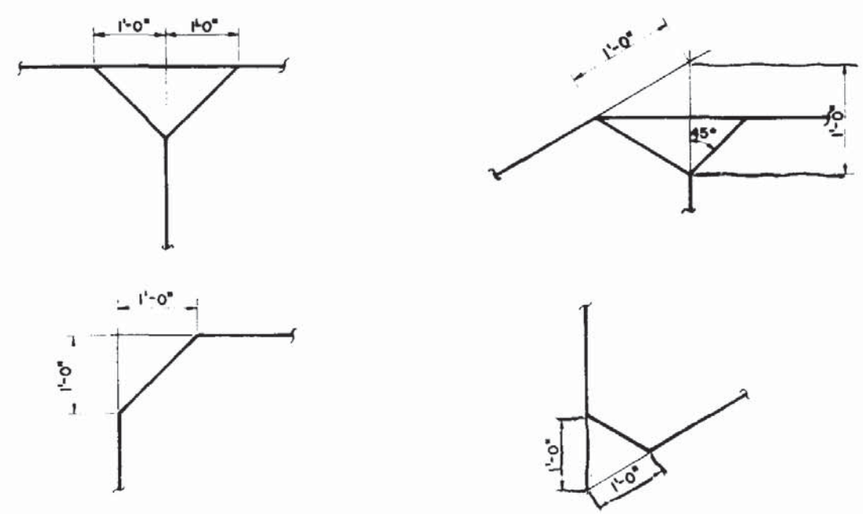

LOOP CORNER AND LEAD-IN DETAILS

NOTES:

1. THE "NUMBER OF TURNS" INDICATED AT THE SPECIFIED POINT ON THE LOOP REFERS TO THE NUMBER OF PASSES OF LOOP WIRES WHICH ARE PLACED IN THE SAW CUT IN FORMING THE COMPLETE LOOP.
2. LOOP TYPES OR DETAILS NOT DRAWN TO SCALE.
3. LOOP TYPES ARE CENTERED IN A SINGLE LANE EXCEPT TYPE E WHICH IS CENTERED IN TWO LANES.
4. THE NUMBER OF INDIVIDUAL LOOPS IN, THE TYPE G LOOP MAY VARY UP TO A MAXIMUM OF FOUR (4).

FLORIDA DEPARTMENT OF TRANSPORTATION TRAFFIC DESIGN			
VEHICLE LOOP INSTALLATION DETAILS			
	INITIALS	DATES	
Designed by			Approved by [signature]
Checked by			
Quantities by			STATE DESIGN ENGINEER - RDWY
Checked by			
Supervised by			DRAWING NO 2 of 2 / INDEX NO 17781

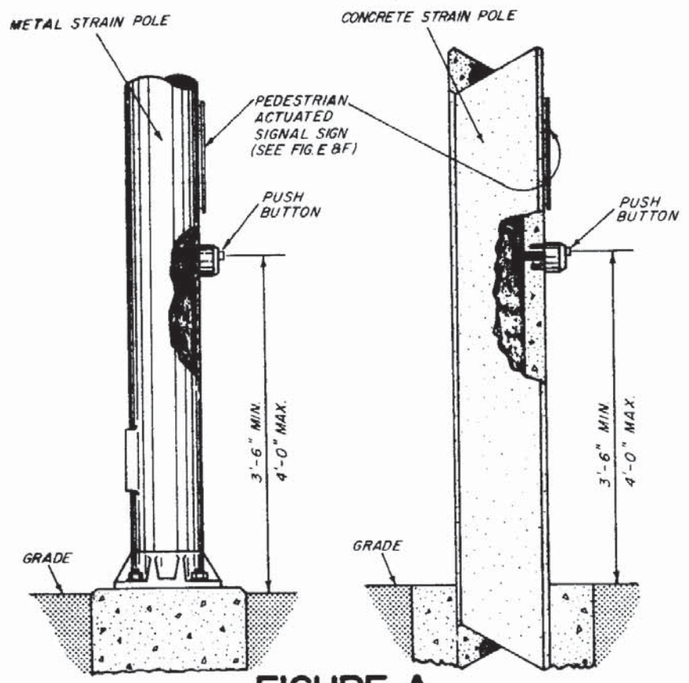

FIGURE A
POLE MOUNTED
DETECTOR STATION

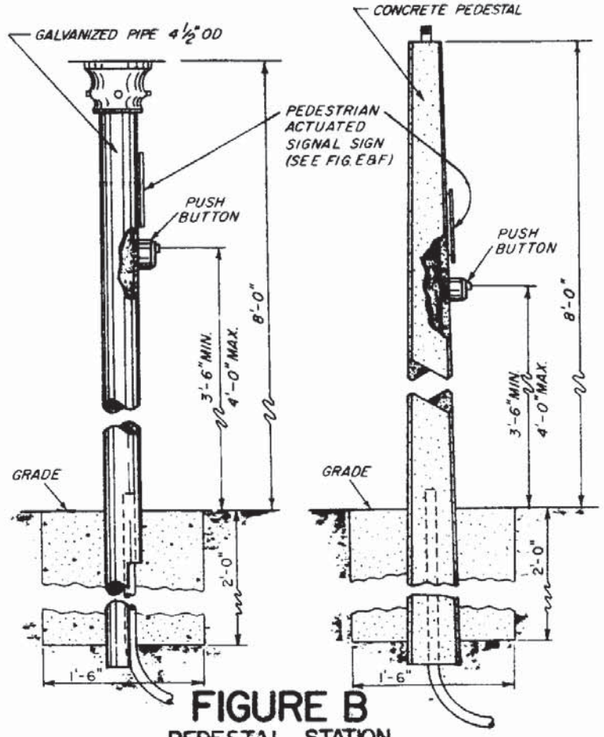

FIGURE B
PEDESTAL STATION
DETECTOR STATION

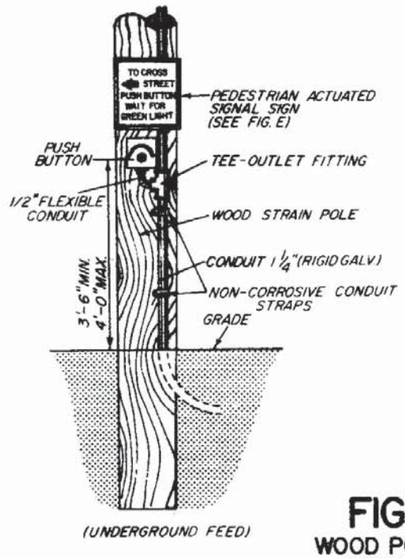

(UNDERGROUND FEED)

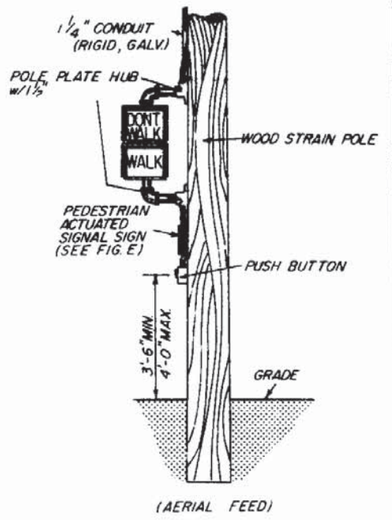

(AERIAL FEED)

FIGURE C
WOOD POLE MOUNTED
DETECTOR STATION

NOTES

1. SIGNS (R10-3a & R10-4a) SHALL BE MOUNTED ABOVE DETECTORS, EXPLAINING THEIR PURPOSE AND USE.
2. THE POSITIONING OF PEDESTRIAN PUSH BUTTON SHOULD CLEARLY INDICATE WHICH CROSSWALK SIGNAL IS ACTUATED BY EACH PUSH BUTTON.
3. PUSH BUTTONS AND SIGNS ARE TO BE MOUNTED IN ACCORDANCE WITH STANDARD SPECIFICATIONS.
4. GROUND TO BE IN ACCORDANCE WITH SECTION B620 OF STANDARD SPECIFICATIONS.

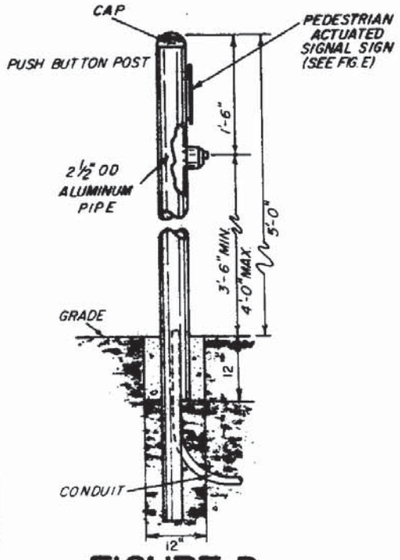

FIGURE D
POST DETECTOR STATION
DETECTOR STATION

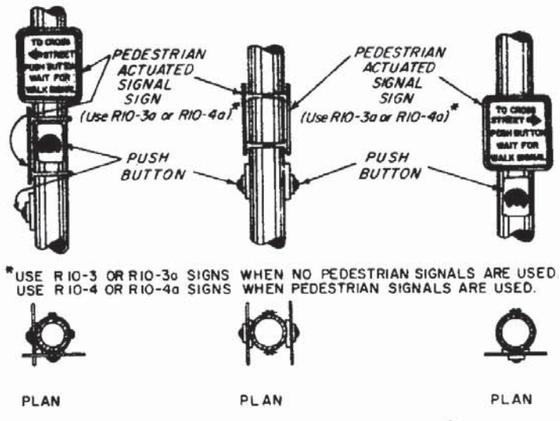

*USE R10-3 OR R10-3a SIGNS WHEN NO PEDESTRIAN SIGNALS ARE USED
USE R10-4 OR R10-4a SIGNS WHEN PEDESTRIAN SIGNALS ARE USED.

FIGURE E

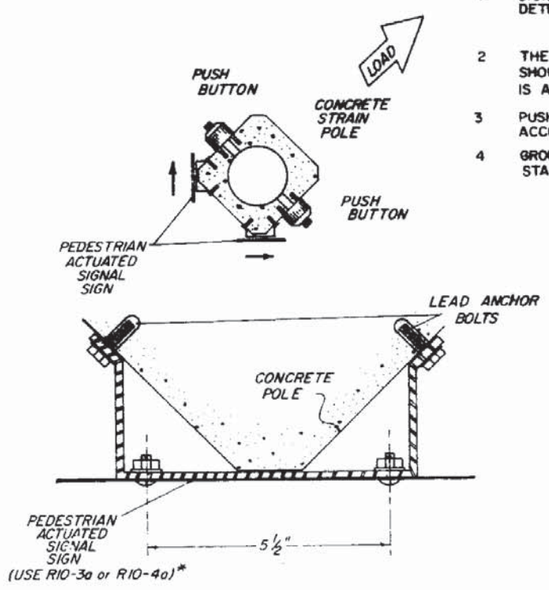

FIGURE F

REVISIONS				INITIALS	DATES
DATE	INITIALS	DESCRIPTION	Designed by	J.M.C.	7-13-77
10-31-79	J.M.C.	DELETED ITEM NOs. B ADDED FIGURE F	Checked by		
08-27-80	J.M.C.	DELETED NOTES 4 & 5, AND REVISED FIGURE F	Quantities by		
			Checked by		
			Supervised by		

FLORIDA DEPARTMENT OF TRANSPORTATION
TRAFFIC DESIGN

PEDESTRIAN DETECTOR ASSEMBLY INSTALLATION DETAILS

Approved by _____
STATE DESIGN ENGINEER-RDWY.

DRAWING NO. 1 OF 1 | INDEX NO. 17784

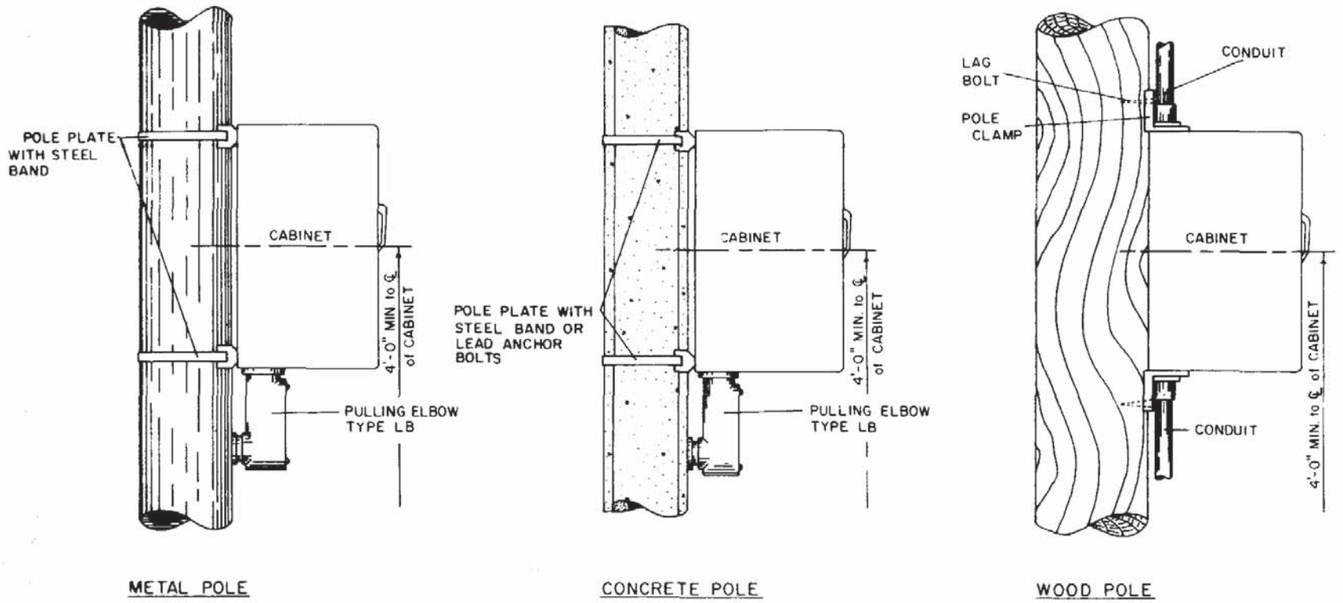

POLE MOUNTED CABINET

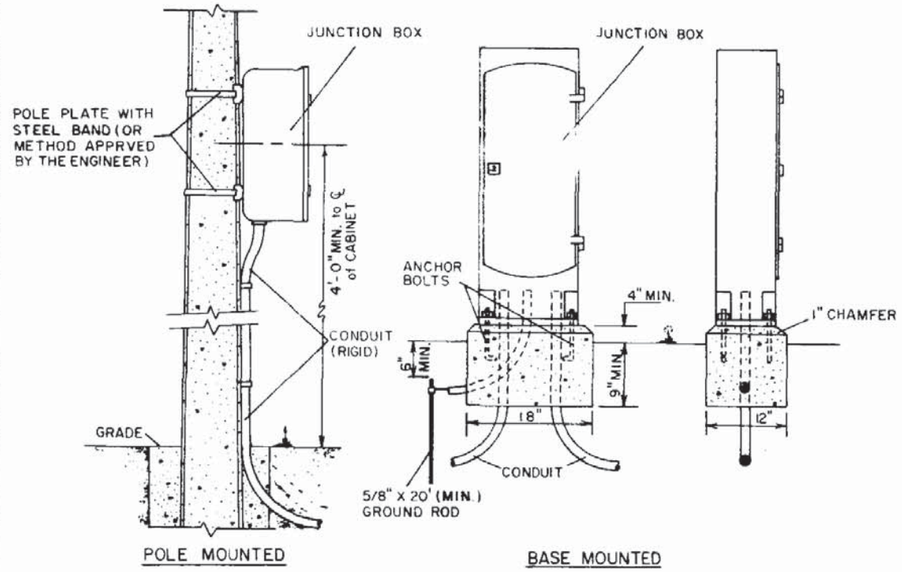

INTERCONNECT JUNCTION BOX

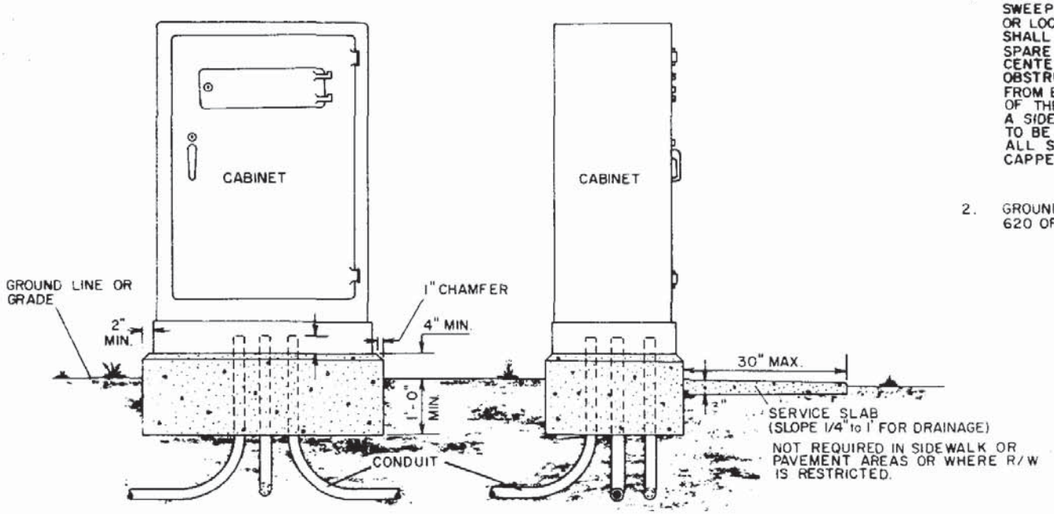

BASE MOUNTED CABINET

NOTES:

1. NUMBER, SIZE AND ORIENTATION OF CONDUIT SWEEP WILL VARY ACCORDING TO SITE CONDITION OR LOCATIONS. ONE SPARE 2" PVC CONDUIT SHALL BE PROVIDED IN ALL BASES. THE SPARE SHALL EXIT IN THE DIRECTION OF THE CENTER REAR OF THE CABINET BASE IF OBSTRUCTIONS PREVENT THE SPARE CONDUIT FROM EXITING TO THE REAR, OR THE REAR OF THE CABINET IS LOCATED ON THE R/W LINE, A SIDE EXIT OF THE SPARE CONDUIT WILL HAVE TO BE APPROVED BY THE PROJECT ENGINEER. ALL SPARE SWEEPS OF CONDUIT SHALL BE CAPPED WITH A WEATHER PROOF FITTING.
2. GROUNDING TO BE IN ACCORDANCE WITH SECTION 620 OF THE STANDARD SPECIFICATIONS.

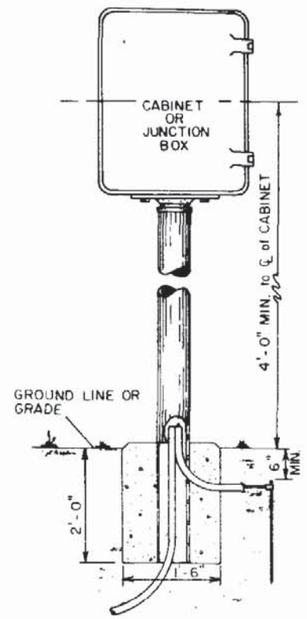

PEDESTAL MOUNTED

FLORIDA DEPARTMENT OF TRANSPORTATION TRAFFIC DESIGN			
CABINET INSTALLATION DETAIL			
	INITIALS	DATES	
Redrawn by	Mick	09-17-80	Approved by
Revised by	Mick	05-24-81	STATE DESIGN ENGINEER-RDWY.
Supervised by		DRAWING NO. 1 OF 1	INDEX NO. 17841

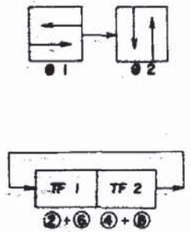

SOP 1

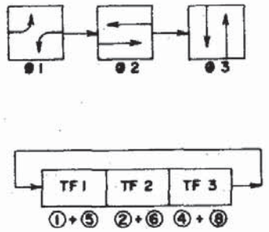

SOP 2

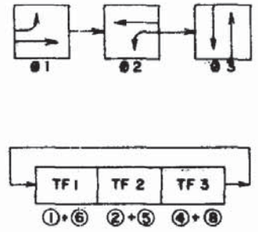

SOP 3

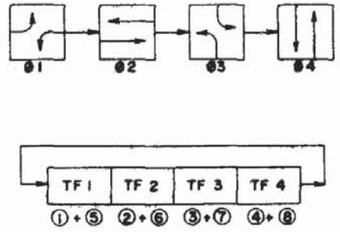

SOP 4

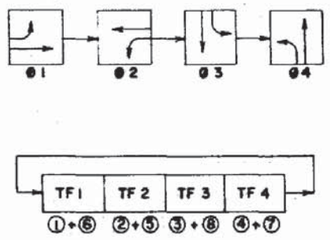

SOP 5

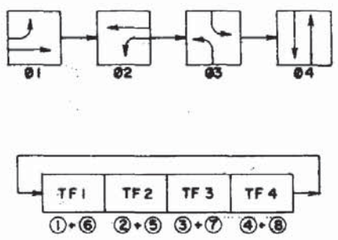

SOP 6

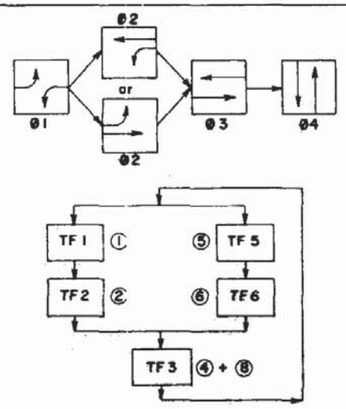

SOP 7

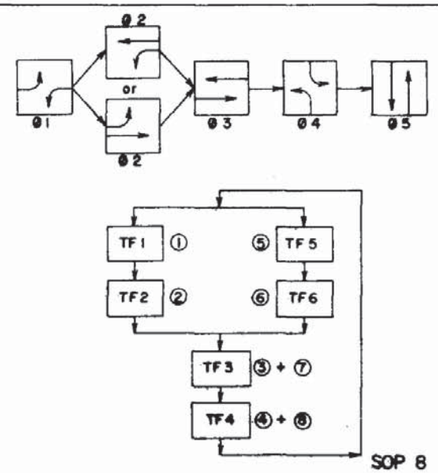

SOP 8

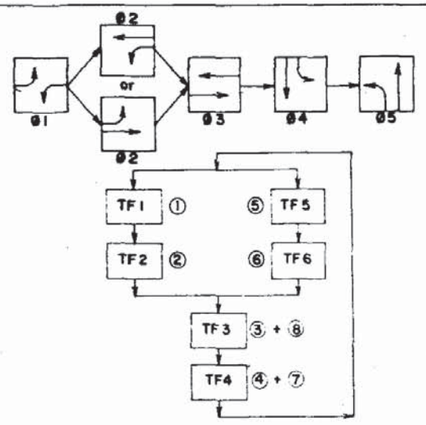

SOP 9

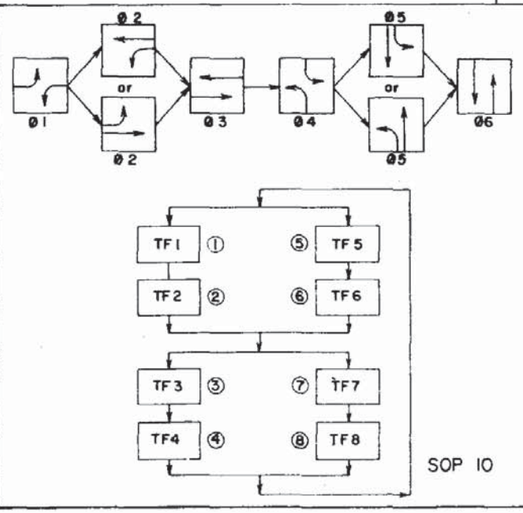

SOP 10

SIGNAL CLEARANCE TABLE

(Blank Indicates No Clearance Required)

From \ To		R	~~R~~	G	~~G~~	~~G~~*	⇩	WALK	DON'T WALK
SIGNAL INDICATIONS	R			Y	Y	~~Y~~	Y		
	~~R~~			Y	Y	~~Y~~	Y		
	G				Y	~~Y~~			
	~~G~~								
	~~G~~*								
	⇩								
	WALK								
	DON'T WALK							Flash DON'T WALK	

* CLEARANCE INDICATION WHEN YELLOW ARROW IS USED.

SIGNALIZED INTERSECTION

Vehicle Movements & Signal Head Number Assignments Are Not Directionally Oriented But Shall Maintain Their Relative Orientation About The Intersection (I.E. Movements 7 and 4 Are Always To The Right Of Movements 1 And 6 Etc.)

LEGEND

- (X) Vehicle Movement Number
- (PX) Pedestrian Movement Number
- TF X Timing Function Number
- ØX Phase Number
- Green Arrow (Left or Right)
- Red Arrow
- Yellow Arrow

FLORIDA DEPARTMENT OF TRANSPORTATION
TRAFFIC-DESIGN

STANDARD SIGNAL OPERATING PLANS

REVISIONS				INITIALS	DATES
DATE	INITIALS	DESCRIPTION	Drawn by	J.M.C.	4-26-79
			Checked by	J.W.J.	

Approved by _____
STATE DESIGN ENGINEER-ROWY.

DRAWING NO. 1 OF 2 | INDEX NO. 17870

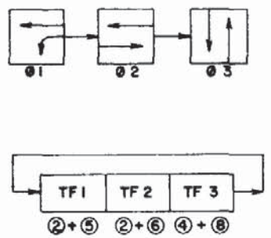

SOP 11

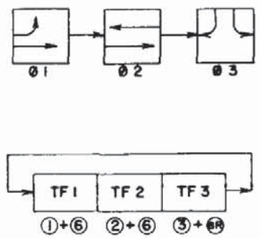

SOP 12

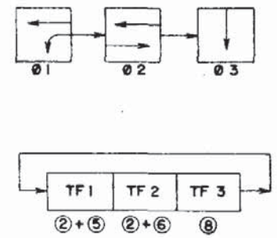

SOP 13
(ONE-WAY STREET INTERSECTION)

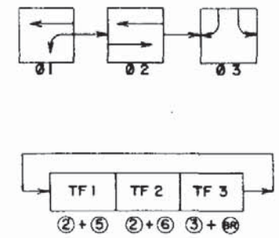

SOP 14
(DIAMOND INTERCHANGE OPERATION)

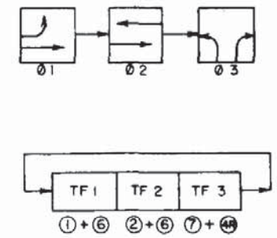

SOP 15
(DIAMOND INTERCHANGE OPERATION)

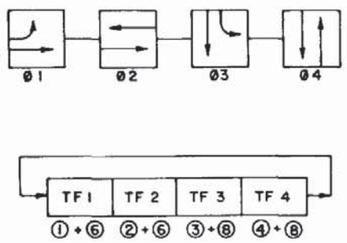

SOP 16

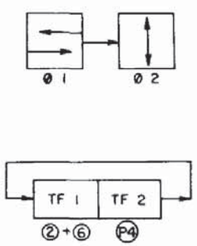

SOP 17
(MID-BLOCK)

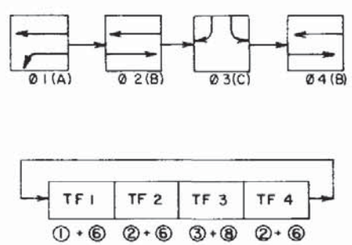

NOTE:
Only Ø2 or Ø4 used, Not both to obtain ABC, Or ACB operation.

SOP 18
(DIAMOND INTERCHANGE OPERATIONS)

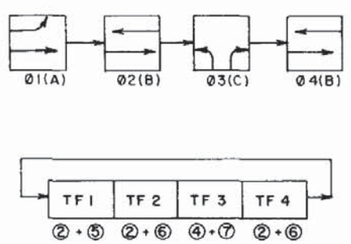

NOTE:
Only Ø2 or Ø4 used, Not both to obtain ABC, Or ACB operation.

SOP 19
(DIAMOND INTERCHANGE OPERATIONS)

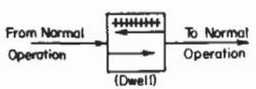

POP 1

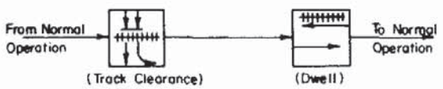

POP 2



POP 3

FLORIDA DEPARTMENT OF TRANSPORTATION
TRAFFIC DESIGN

STANDARD SIGNAL OPERATING PLANS

REVISIONS				INITIALS	DATES
DATE	INITIALS	DESCRIPTION	Drawn by	J.M.C.	9-28-79
08-21-80	J.M.C.	ADDED S.O.P. 16	Checked by	J.W.J.	
08-24-81	J.M.C.	ADDED S.O.P. 18 & 19			

Approved by _____
STATE DESIGN ENGINEER - RDWY.

DRAWING NO. 2 OF 2

INDEX NO. 17870

PASSIVE STATE

(TRAIN CIRCUIT NOT ACTUATED)

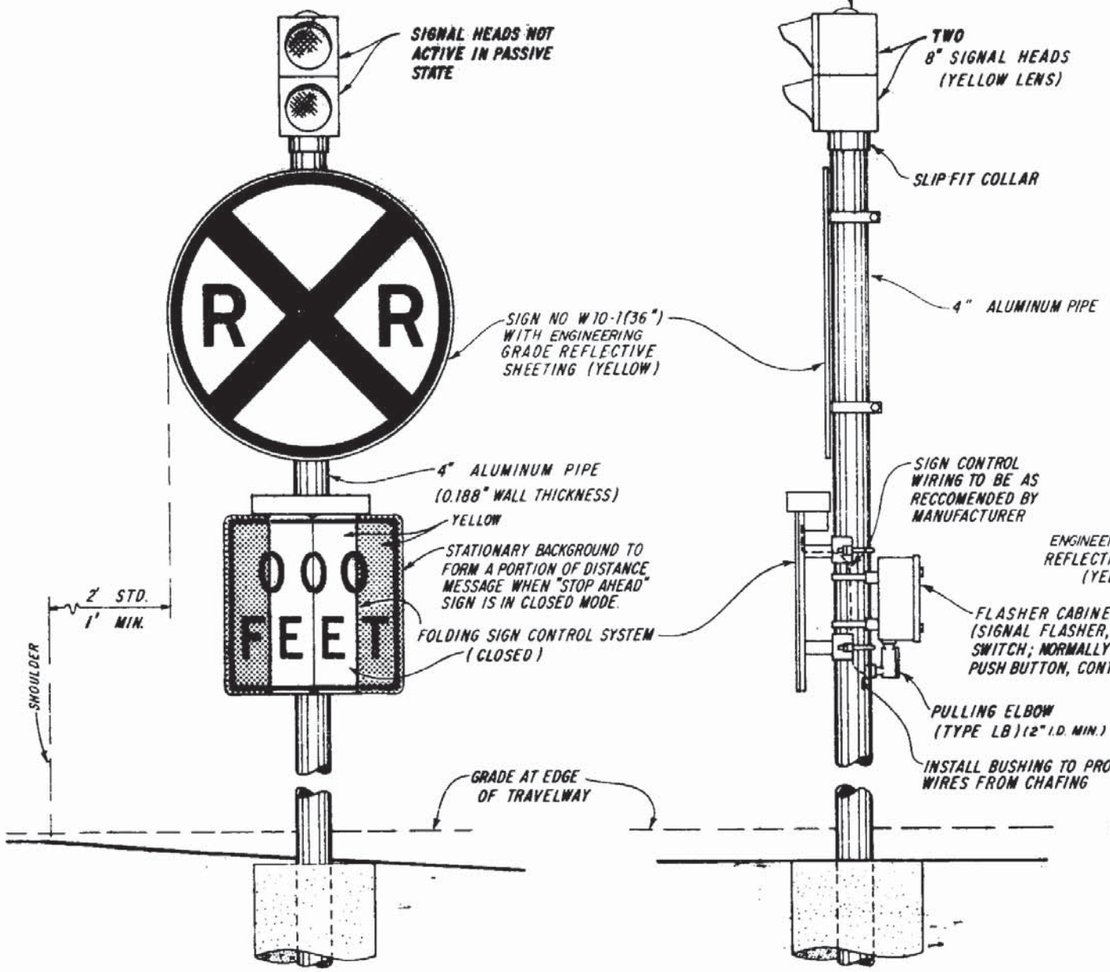

FRONT VIEW

SIDE VIEW

ACTIVE STATE

(TRAIN CIRCUIT ACTUATED)

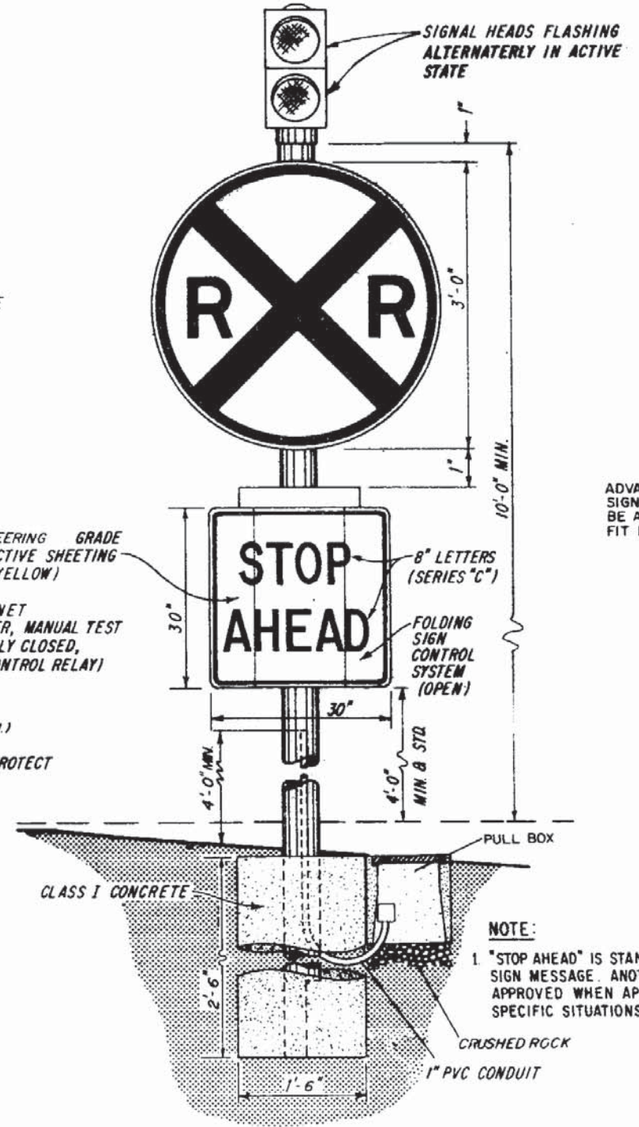

FRONT VIEW

NOTE:

1. "STOP AHEAD" IS STANDARD AND PREFERRED SIGN MESSAGE. ANOTHER MESSAGE MAY BE APPROVED WHEN APPROPRIATE FOR SPECIFIC SITUATIONS.

LOCATION OF THE ADVANCE WARNING SIGN

SPEED M.P.H.	DISTANCE FEET
30	200
40	275
50	350
55	425

THE DISTANCE IS MEASURED ALONG RIGHT EDGE OF PAVEMENT FROM R/R STOP BAR TO THE ADVANCE WARNING SIGN.

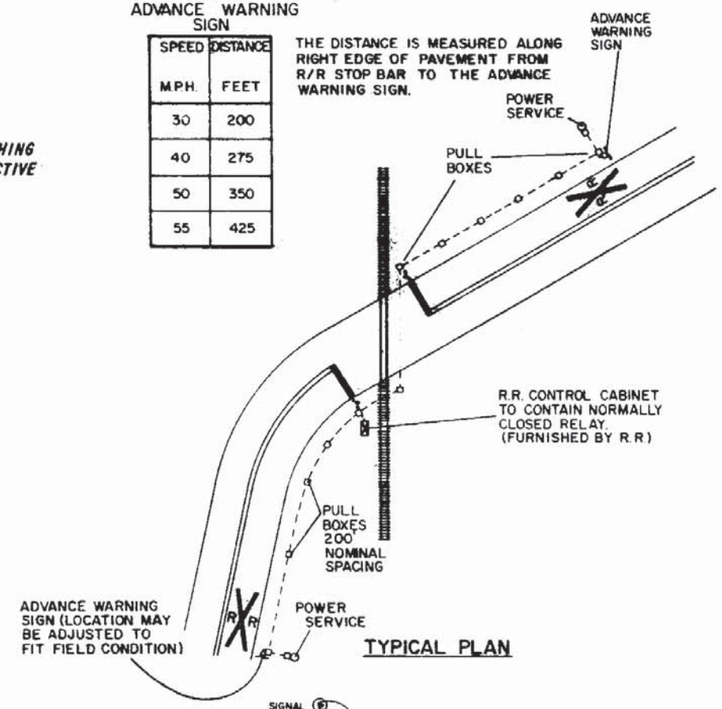

TYPICAL PLAN

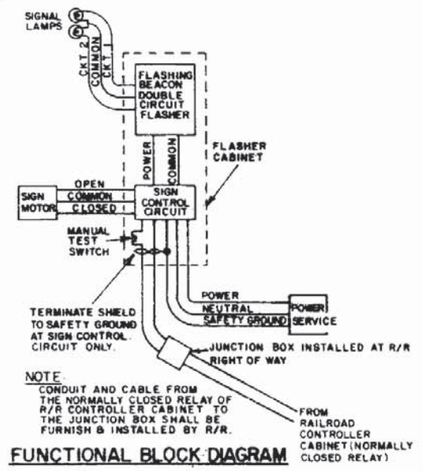

NOTE

CONDUIT AND CABLE FROM THE NORMALLY CLOSED RELAY OF R/R CONTROLLER CABINET TO THE JUNCTION BOX SHALL BE FURNISH & INSTALLED BY R/R.

FUNCTIONAL BLOCK DIAGRAM

REVISIONS				INITIALS	DATES
DATE	INITIALS	DESCRIPTION	Designed by	CG	12/12/75
8/28/78	J.M.C.	DELETED NOTE NO. 2	Checked by		12/12/75
10/30/79	J.R.M.	DELETED DUPLICATE NOTES AND CLARIFIED OTHER NOTES	Quantities by		
09-04-80	MICK	ADDED PULL BOX, REVISED 4" PEDESTAL	Checked by		
9-7-83	LW	JUNCTION BOX NOTE ADDED	Supervised by		

FLORIDA DEPARTMENT OF TRANSPORTATION
TRAFFIC DESIGN

ADVANCE WARNING FOR R.R. CROSSING

Approved by _____
STATE DESIGN ENGINEER-PDWY.

DRAWING NO. 1 OF 1

INDEX NO. 17881

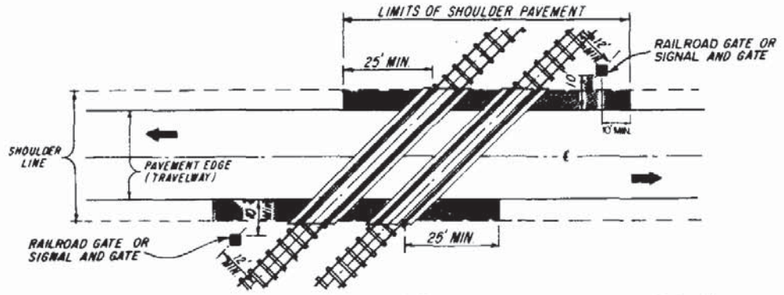

TRACK CLEARANCE FOR ACUTE OR RIGHT ANGLE CROSSINGS

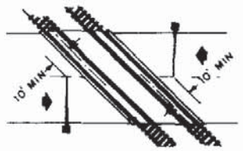

TYPICAL LOCATION PLAN FOR GATE OR FLASHING SIGNAL WITH GATE WHEN TRACKS ARE AT OBTUSE ANGLE.

NOTE:
IT IS INTENDED THAT THE FULL SHOULDER WIDTH OF THE EXISTING ROADWAY BE PAVED. WHERE AN EXISTING SHOULDER IS SUBSTANTIALLY SUBSTANDARD FOR THE FACILITY INVOLVED, THE SHOULDER WIDTH SHOULD BE UPGRADED TO MEET CURRENT STANDARDS.

SIGNAL PLACEMENT AT RAILROAD CROSSING (2-LANE DESIGN)

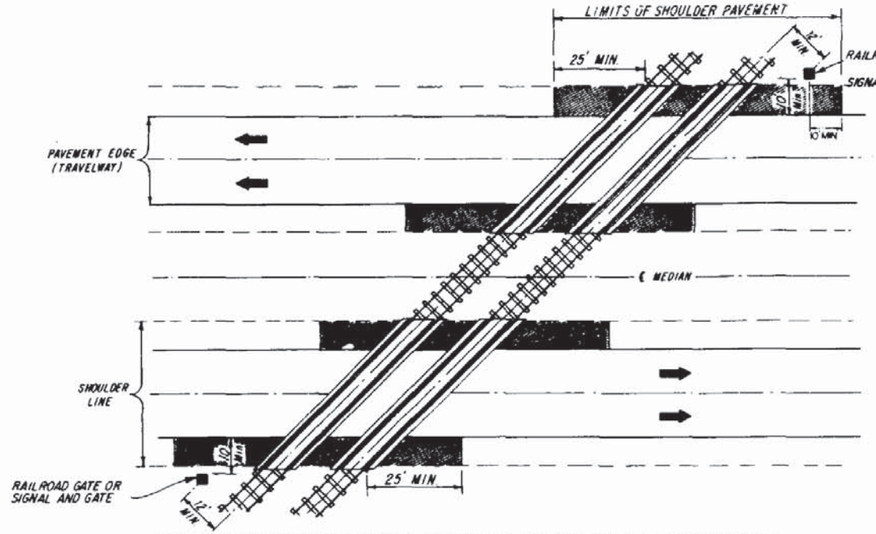

TRACK CLEARANCE FOR ACUTE OR RIGHT ANGLE CROSSINGS

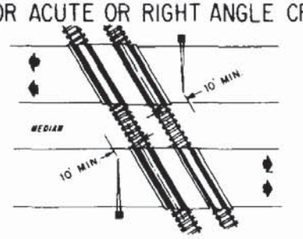

TYPICAL LOCATION PLAN FOR GATE OR FLASHING SIGNAL WITH GATE WHEN TRACKS ARE AT OBTUSE ANGLE.

SIGNAL PLACEMENT AT RAILROAD CROSSING (4-LANE DESIGN)

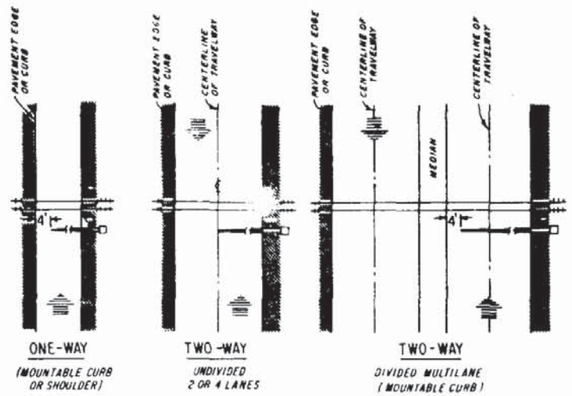

NOTE:
ARROWS DENOTE DIRECTION OF TRAVEL, NOT LANE INDICATION

FIGURE 1

GATE LENGTH REQUIREMENTS

GENERAL NOTES

1. NO GUARDRAIL IS PROPOSED FOR SIGNALS; HOWEVER, SOME FORM OF IMPACT ATTENUATION DEVICE MAY BE SPECIFIED FOR CERTAIN LOCATIONS.
2. ADVANCE FLASHER TO BE INSTALLED WHEN AND IF CALLED FOR IN PLANS OR SPECIFICATIONS.
3. TOP OF FOUNDATION SHALL BE NO GREATER THAN 4" ABOVE FINISHED SHOULDER GRADE.
4. TYPE OF TRAFFIC CONTROL DEVICES
   - I FLASHING SIGNALS
   - II FLASHING SIGNALS WITH CANTILEVER
   - III FLASHING SIGNALS WITH GATE
   - IV FLASHING SIGNALS WITH CANTILEVER & GATE
   - V GATE
5. CLASS OF TRAFFIC CONTROL DEVICES
   - I FLASHING SIGNALS-ONE TRACK
   - II FLASHING SIGNALS-MULTIPLE TRACKS
   - III FLASHING SIGNALS AND GATES-ONE TRACK
   - IV FLASHING SIGNALS AND GATES-MULTIPLE TRACKS

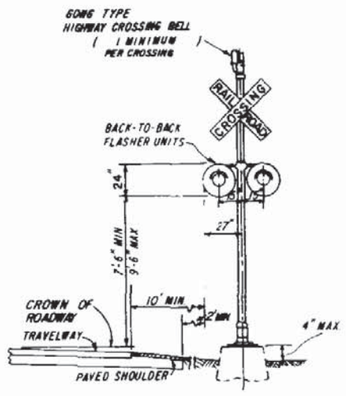

TYPE I

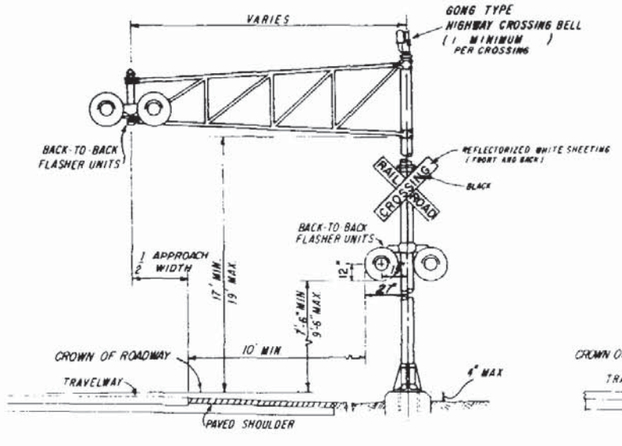

TYPE II

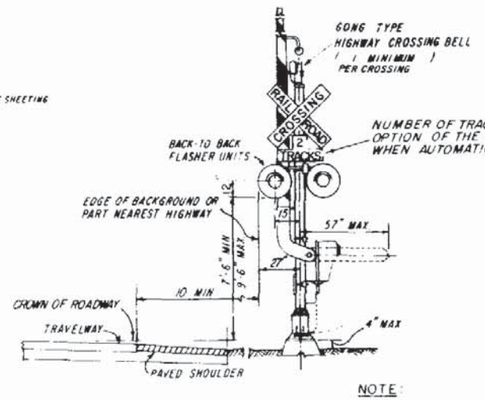

TYPE III

NOTE:
TWO SEPERATE FOUNDATIONS MAY BE REQUIRED (ONE FOR SIGNALS, ONE FOR GATE), DEPENDING ON TYPE OF EQUIPMENT USED.

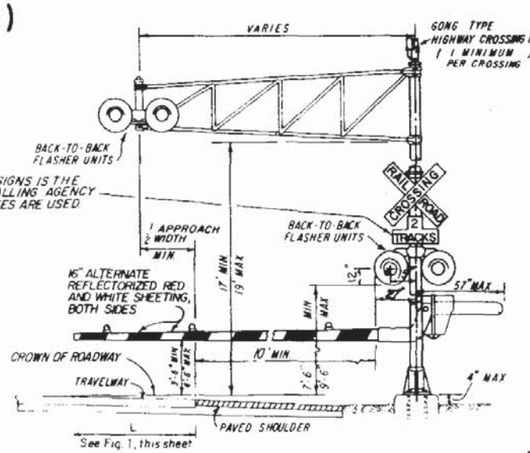

TYPE IV

REVISIONS		
DATE	INITIALS	DESCRIPTION
9-7-83	L.W.	CHANGED DIMENSIONS OF FLASHER UNITS
10-15-85	J.G.	ADDED SHEET 4 OF 4 TO INDEX
10-15-85	J.G.	DELETE NOTE 6. DELETE #8 REF. TO 8" NONMOUNTABLE CURB, FIG. 1

REVISIONS		
DATE	INITIALS	DESCRIPTION
7-19-77	J.J.	ADDED GONG TYPE HIGHWAY CROSSING BELL
11-9-77	J.J.	ADDED SHEET 3of3 TO INDEX
8-27-78	J.M.C.	REVISED NOTE 3., ADDED NOTE TO NO. OF TRACKS SIGNS
		REVISED TYPE II & IV OVERHEAD SIGNAL PLACEMENT TO 1/2 APPROACH WIDTH.
10-3-79	J.M.C.	ADDED GATES TO RAILROAD & SIGNAL AND REVISED NOTE ON TYPICAL LOCATIONS AND NOTE 3.

	INITIALS	DATES
Designed by	C.G.	4-8-76
Checked by	R.M.	4-8-76
Quantities by		
Checked by		
Supervised by		

FLORIDA DEPARTMENT OF TRANSPORTATION
TRAFFIC DESIGN
RAILROAD GRADE CROSSING TRAFFIC CONTROL DEVICES

Approved by _____
STATE DESIGN ENGINEER - RDWY

DRAWING NO. 1 OF 4 | INDEX NO. 17882

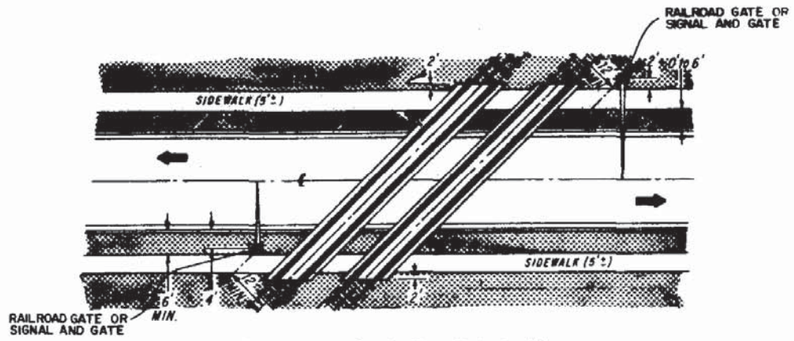

ACUTE ANGLE (AND RIGHT ANGLE)

SIGNAL PLACEMENT AT RAILROAD CROSSING (2 LANES, CURB & GUTTER)

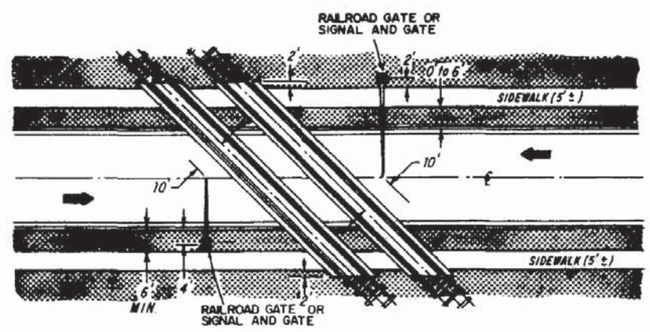

OBTUSE ANGLE

SIGNAL PLACEMENT AT RAILROAD CROSSING (2 LANES, CURB & GUTTER)

GENERAL NOTES

7. THE LOCATION OF FLASHING SIGNALS AND STOP LINES SHALL BE ESTABLISHED BASED ON FUTURE (OR PRESENT) INSTALLATION OF GATES WITH APPROPRIATE TRACK CLEARANCES.

8. WHERE PLANS CALL FOR RAILROAD TRAFFIC CONTROL DEVICES TO BE INSTALLED IN CURBED MEDIANS, THE MINIMUM MEDIAN WIDTH SHALL BE 12.5 FEET.

9. LOCATION OF RAILROAD TRAFFIC CONTROL DEVICE IS BASED ON THE DISTANCE AVAILABLE BETWEEN FACE OF CURB & SIDEWALK.
   0' TO 6' - LOCATE DEVICE OUTSIDE SIDEWALK.
   OVER 6' - LOCATE DEVICE BETWEEN FACE OF CURB AND SIDEWALK.

10. STOP LINE TO BE PERPENDICULAR TO EDGE OF ROADWAY, APPROX. 15' FROM NEAREST RAIL; OR 8' FROM AND PARALLEL TO GATE WHEN PRESENT

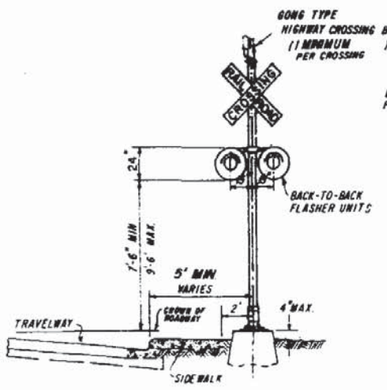

TYPE I

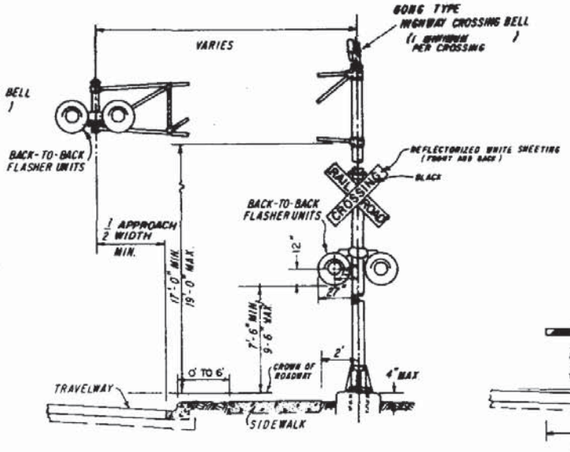

TYPE II

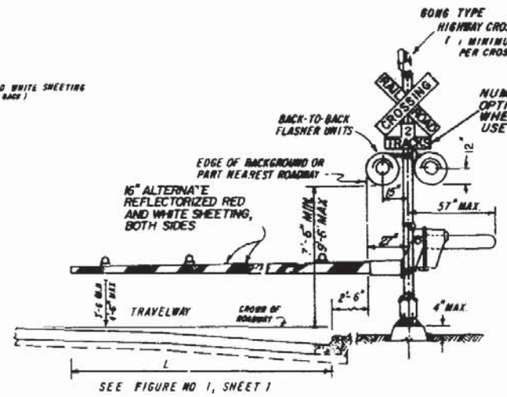

TYPE III

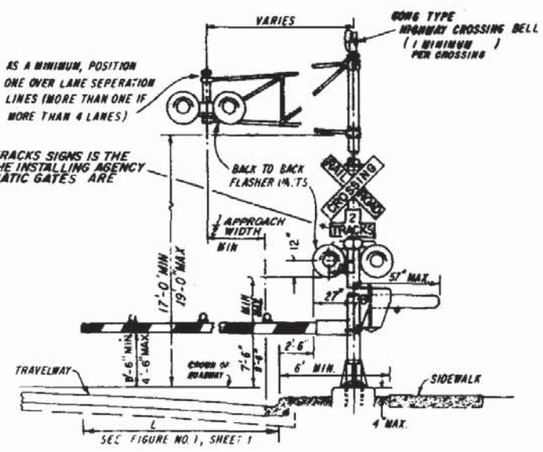

TYPE IV

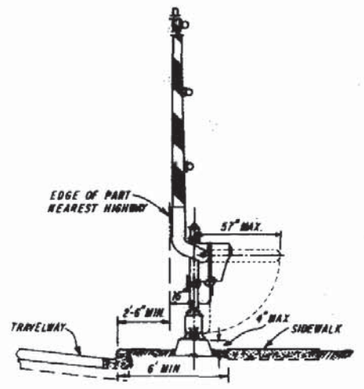

TYPE V

REVISIONS			REVISIONS		
DATE	INITIALS	DESCRIPTION	DATE	INITIALS	DESCRIPTION
9-7-85	L.W.	CHANG DIMENSIONS OF FLASHER UNITS	7-19-77	J.J.	ADDED GONG TYPE HIGHWAY CROSSING BELL
10-15-85	J.G.	ADDED SHEET 4 OF 4 TO INDEX	11-9-77	J.J.	ADDED SHEET 3of3 TO INDEX
10-15-85	J.G.	REVISED NOTE 8, MEDIAN WIDTH FROM 10' to 12.5'	8-27-78	J.M.C.	REVISED NOTES 7&8 AND ADDED NOTE TO NUMBER OF TRACKS SIGNS.
					REVISED TYPE II & IV OVERHEAD SIGNAL PLACEMENT TO 1/2 APPROACH WIDTH.
			10-31-79	J.M.C.	REVISED NOTES 7-10 AND ADDED RAILROAD GATES & SIGNAL GATE TO CROSSING

FLORIDA DEPARTMENT OF TRANSPORTATION
TRAFFIC DESIGN

RAILROAD GRADE CROSSING TRAFFIC CONTROL DEVICES

	INITIALS	DATES
Designed by	C.G.	4-8-76
Checked by	R.M.	4-8-76
Quantities by		
Checked by		
Supervised by		

Approved by _____
STATE DESIGN ENGINEER - RDWY.

DRAWING NO. 2 OF 4 | INDEX NO. 17882

RAILROAD CROSSING AT TWO (2)-LANE ROADWAY

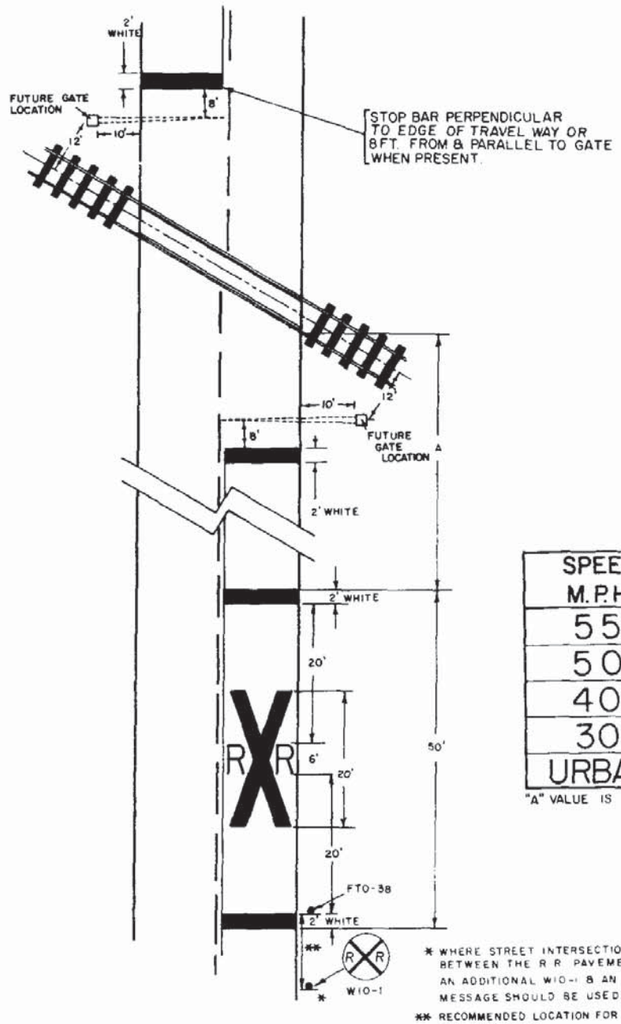

SPEED M.P.H.	"A" IN FT.
55	425
50	350
40	275
30	200
URBAN	50 MIN.

"A" VALUE IS BASED ON AASHO MIN SSD

* WHERE STREET INTERSECTIONS OCCUR BETWEEN THE R.R. PAVEMENT MESSAGE & THE TRACKS AN ADDITIONAL W10-1 & AN ADDITIONAL PAVEMENT MESSAGE SHOULD BE USED.

** RECOMMENDED LOCATION FOR FTO-38 SIGNS 100' URBAN AND 300' RURAL.

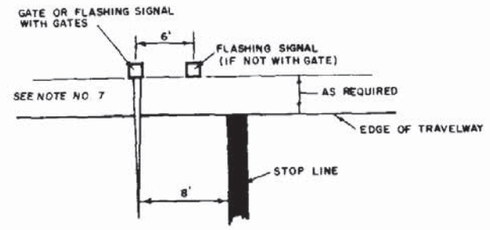

RELATIVE LOCATION OF CROSSING TRAFFIC CONTROL DEVICES

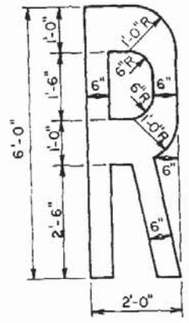

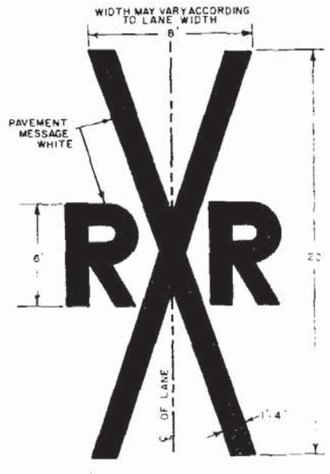

RAILROAD CROSSING AT MULTI-LANE ROADWAY

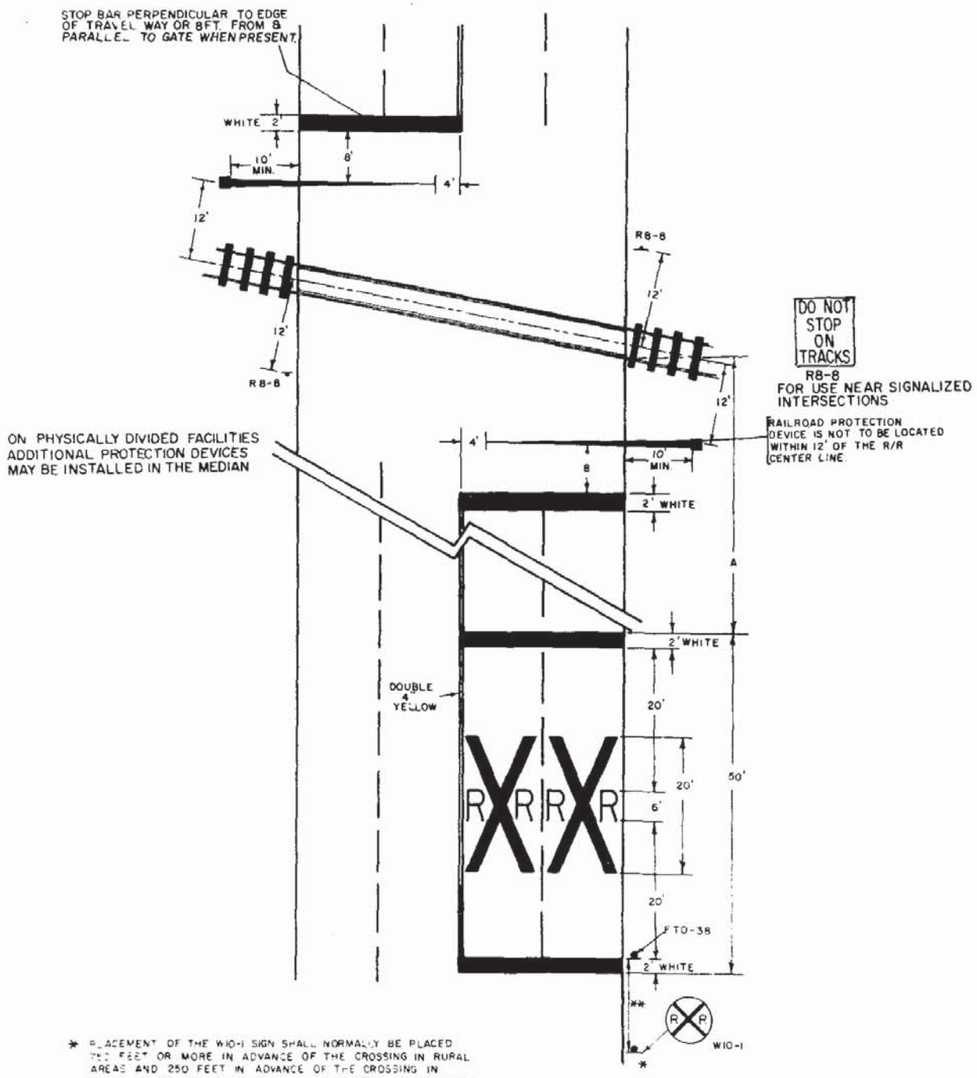

* PLACEMENT OF THE W10-1 SIGN SHALL NORMALLY BE PLACED 250 FEET OR MORE IN ADVANCE OF THE CROSSING IN RURAL AREAS AND 250 FEET IN ADVANCE OF THE CROSSING IN URBAN AREAS EXCEPT THAT IN A RESIDENTIAL OR BUSINESS DISTRICT, WHERE LOW SPEEDS ARE PREVALENT, THE SIGN MAY BE PLACED A MINIMUM DISTANCE OF 100 FEET FROM THE CROSSING. IF THERE IS A STREET INTERSECTION WITHIN 100 FEET AN ADDITIONAL SIGN OR SIGNS MAY BE PLACED TO WARN TRAFFIC APPROACHING THE CROSSING FROM EACH INTERSECTING STREET.

** RECOMMENDED LOCATION FOR FTO-38 SIGN 100' URBAN AND 300' RURAL.

REVISIONS			INITIALS	DATES
DATE	INITIALS	DESCRIPTION		
-9-77	J.J	ADDED TO INDEX	Designed by	J.M.C. 10/26/77
8-27-78	J.M.C.	REALIGN STOP BARS & RELOCATE SIGN R8-8	Checked by	
		RELOCATE SIGN & ADDED NOTE TO W10-1	Quantities by	
09-22-80	J.M.C.	REVISED R/R "R" DEMENSIONS	Checked by	
2-5-85	J.G.	ADDED SHEET 4 OF 4 TO INDEX	Supervised by	

FLORIDA DEPARTMENT OF TRANSPORTATION
TRAFFIC DESIGN

RAILROAD GRADE CROSSING TRAFFIC CONTROL DEVICES

Approved by _____
STATE DESIGN ENGINEER-RDWY

DRAWING NO 3 OF 4

INDEX NO 17882

STATE PROJ. NO.	SHEET NO.

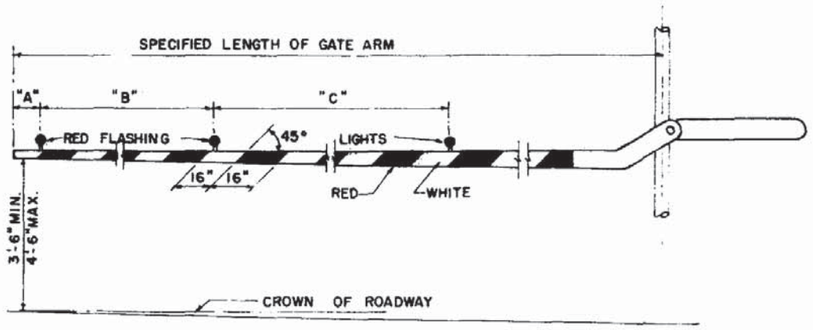

RAILROAD GATE ARM · LIGHT SPACING

SPECIFIED LENGTH OF GATE ARM	DIMENSION "A"	DIMENSION "B"	DIMENSION "C"
14 FT.	6"	36"	5'-0"
15 FT.	18"	36"	5'-0"
16-17 FT.	24"	36"	5'-0"
18-19 FT.	28"	41"	5'-0"
20-23 FT.	28"	4'-0"	5'-0"
24-28 FT.	28"	5'-0"	5'-0"
29-31 FT.	36"	6'-0"	6'-0"
32-34 FT.	36"	7'-6"	7'-0"
35-37 FT.	36"	9'-0"	9'-0"
38 AND OVER	36"	10'-0"	10'-0"

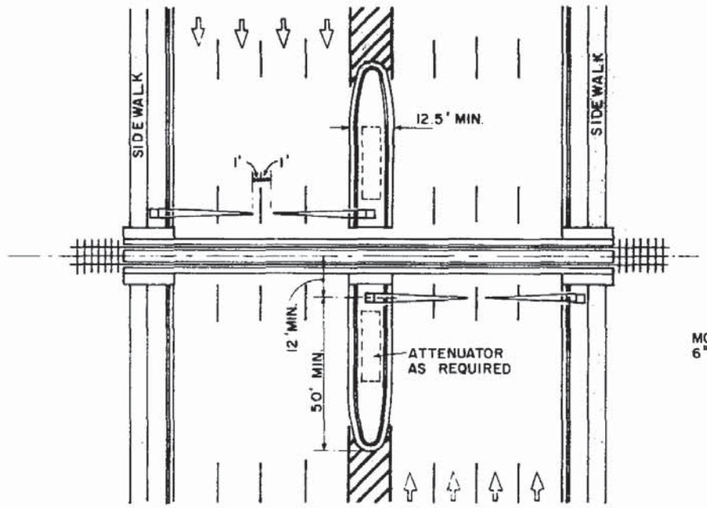

PLAN

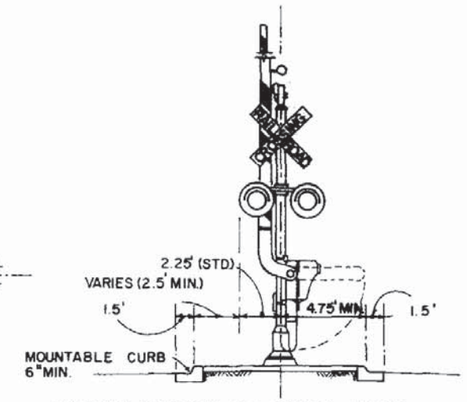

MEDIAN SECTION AT SIGNAL GATES

NOTE:

FOR ADDITIONAL INFORMATION SEE THE "MANUAL ON UNIFORM TRAFFIC CONTROL DEVICES", PART VIII; THE "TRAFFIC CONTROL DEVICES HANDBOOK", PART VIII; AND AASHTO "A POLICY ON GEOMETRIC DESIGN OF STREETS AND HIGHWAYS", 1984.

MEDIAN SIGNAL GATES FOR MULTI LANE UNDIVIDED URBAN SECTIONS

(FOUR OR MORE DRIVING LANES IN ONE DIRECTION, 45 M.P.H. OR LESS)

STATE OF FLORIDA DEPARTMENT OF TRANSPORTATION
TRAFFIC DESIGN

RAILROAD GRADE CROSSING TRAFFIC CONTROL DEVICES

	Names	Dates
Designed by	J.G.	10-15-85
Drawn by	J.G.	10-15-85
Checked by		
F.H.W.A. Approved:		

Approved By _____
State Design Engineer, Roadways

Revision No.	Drawing No.	Index No.
	4 OF 4	17882

Typical Bridge Mounts

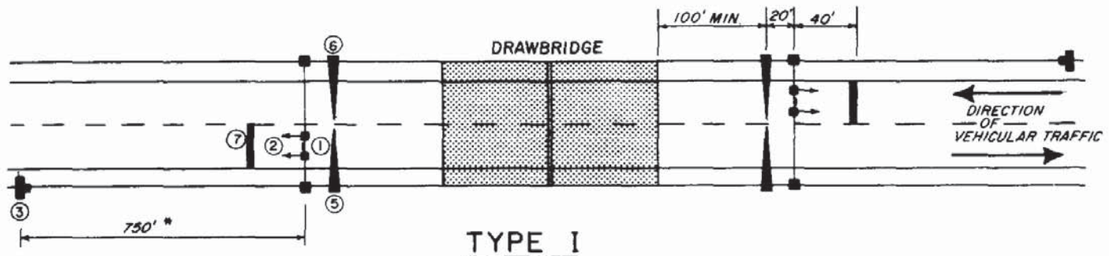

TYPE I

TO BE USED WHERE BRIDGE OPERATORS ARE FULL TIME OR ON A DAILY BASIS

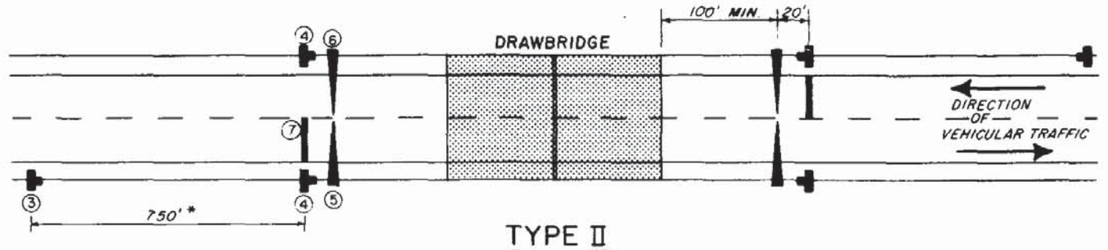

TYPE II

TO BE USED WHERE TYPE I IS NOT APPLICABLE (USUALLY WHEN THE BRIDGE OPERATOR IS "ON CALL")

* FIELD CONDITIONS MAY REQUIRE ADJUSTMENT OF THIS STANDARD DISTANCE.

SEQUENCE CHART

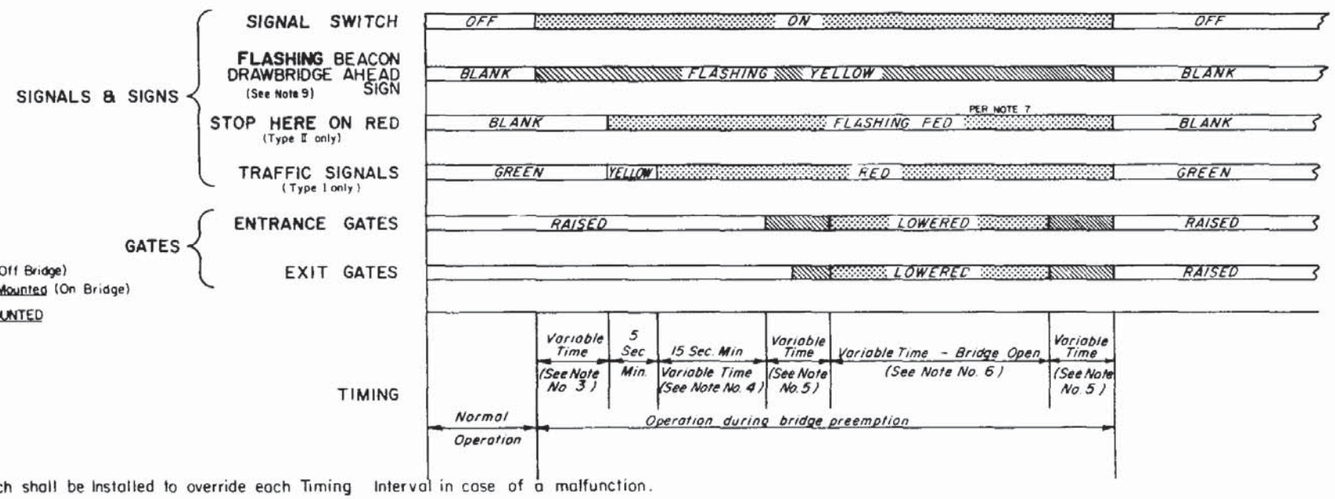

LEGEND

1. TRAFFIC SIGNALS } Mast Arm Mounted (Off Bridge)
2. DRAWBRIDGE SIGN } Monotube Support Mounted (On Bridge)
3. DRAWBRIDGE AHEAD SIGN } GROUND MOUNTED
4. STOP HERE ON RED SIGN } GROUND MOUNTED
5. ENTRANCE GATE
6. EXIT GATE
7. 24" THERMOPLASTIC STOP BAR

NOTES:

1. A Bypass Switch shall be Installed to override each Timing Interval in case of a malfunction.
2. "STOP HERE ON RED" is omitted in Type I operation and "TRAFFIC SIGNALS" are omitted in Type II operation.
3. The time between beginning of flashing yellow on "Drawbridge Ahead" sign and the clearance of traffic signal to red, or beginning of flashing red, should not be less than the travel time of a passenger car, from the sign location to the stop line, traveling at the 85 percentile approach speed.
4. Beginning of operation of drawbridge gates shall not be less than 15 seconds after steady red or 20 seconds after flashing red (Actual time may be determined by the bridge tender).
5. Time of gate lowering and raising is dependant upon gate type.
6. Time of bridge opening is determined by the bridge tender.
7. Each gate shall be operated by a separate switch.
8. On each approach (Type II), all four red signals shall be on the same two circuit flasher, with the two top signals on one circuit, and the two bottom signals on the alternately flashing circuit.
9. A drawbridge ahead sign is required for both types of signal operation, However a flashing beacon shall be added to the sign when physical conditions prevent a driver traveling at the 85% approach speed from having a continous view of at least one signal indication for approximately 10 secs
10. **Requirements on Gate Installation Are Contained In Section 4E-13 through 4E-17 of the Manual on Uniform Traffic Control Devices as revised by Official Rulings, Volume VII Ruling sg 67**

REVISIONS		
DATE	INITIALS	DESCRIPTION
7-20-76	[illegible]	[illegible] TO LEGEND AND PLAN AND ADDED PAYMENT FOR SIGNAL AND GATE ASSEMBLIES IN REVISED TITLE BLOCK
10-6-78	J.M.C.	ADDED NOTES 8 & 9

FLORIDA DEPARTMENT OF TRANSPORTATION
TRAFFIC DESIGN
TRAFFIC CONTROL DEVICES FOR MOVEABLE SPAN BRIDGE SIGNALS

	INITIALS	DATES
Designed by	CG	4-7-75
Checked by	RK	4-7-75
Quantities by		
Checked by		
Supervised by		

Approved by [signature]
STATE DESIGN ENGINEER-RDWY.

DRAWING NO. 1 OF 3 | INDEX NO. 17890

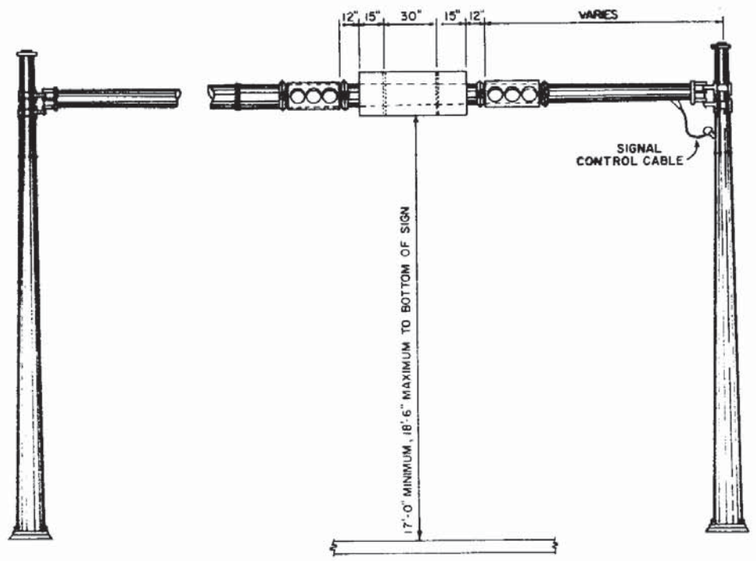

FIGURE - A

MONOTUBE SUPPORT MOUNTING

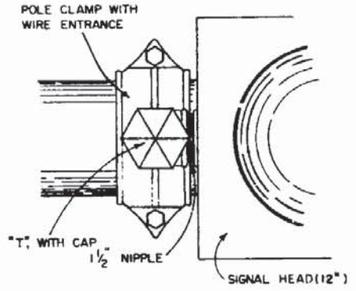

FIGURE - C

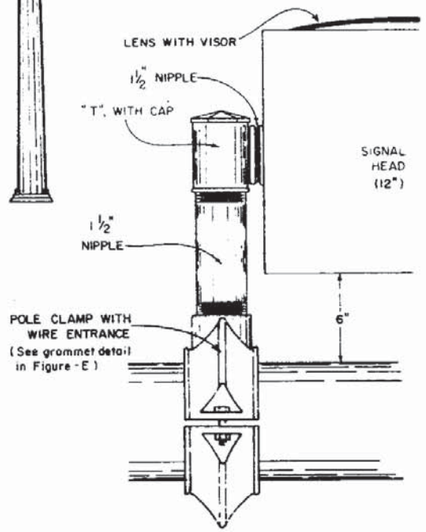

FIGURE - D

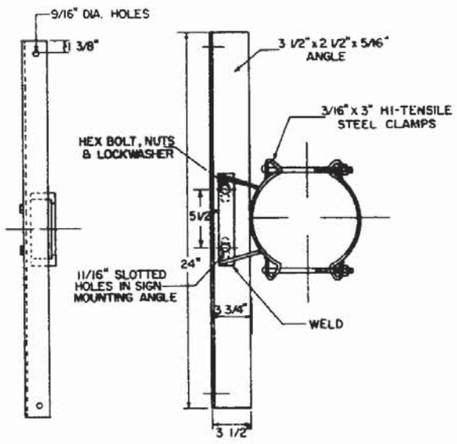

SIGN PANEL MOUNTING ASSEMBLY

FIGURE - B

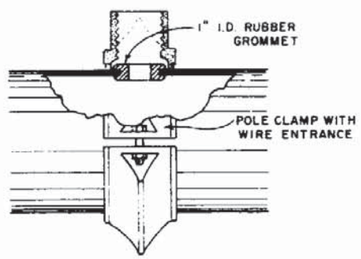

FIGURE - E

SIGNAL HEAD MOUNTING ASSEMBLY

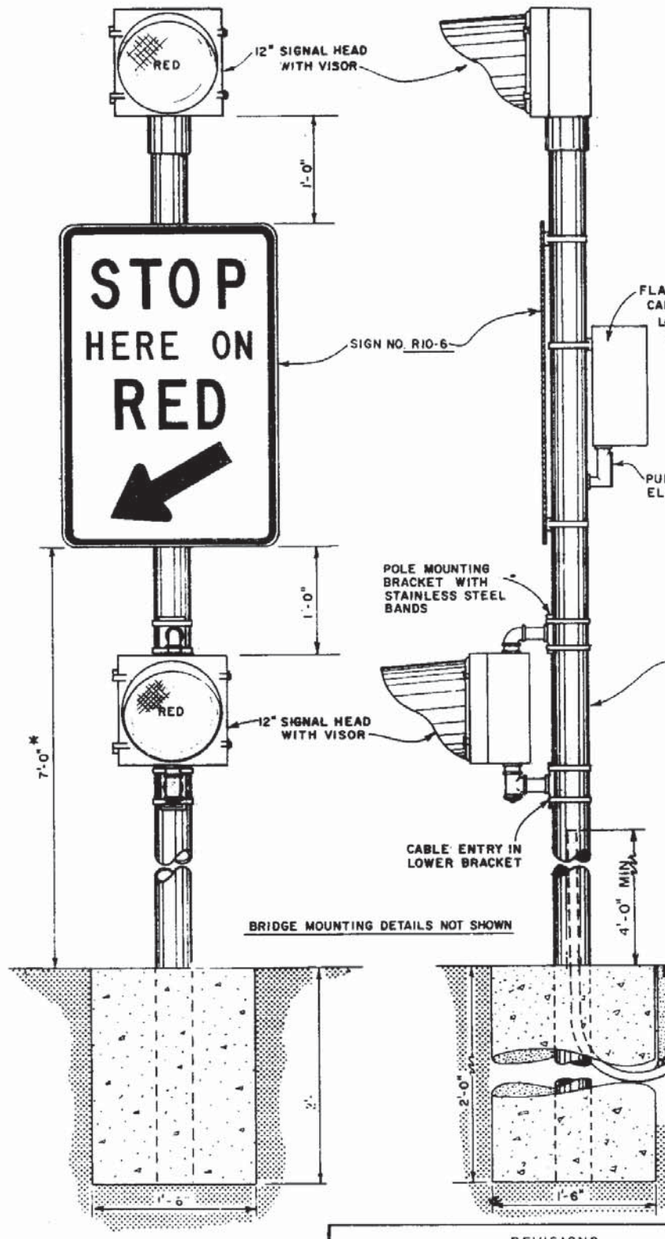

FIGURE - F

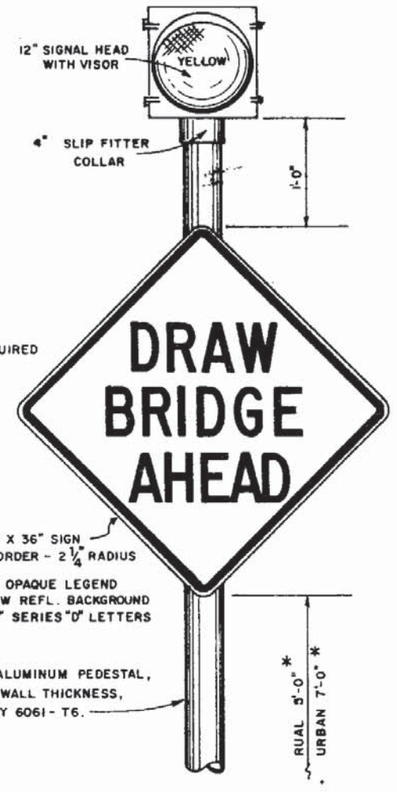

FIGURE - G

* MEASURED FROM THE BOTTOM OF THE SIGN TO THE NEAR EDGE OF THE PAVEMENT. HORIZONTAL DISTANCE BETWEEN EDGE OF THE PAVEMENT AND INSIDE EDGE OF SIGN WILL VARY WITH CONDITION AT JOB SITE.

REVISIONS		
DATE	INITIALS	DESCRIPTION
7-20-76	EEJ	REMOVE HEADERS & REVISED TITLE BLOCK
09-04-80	MICK	REVISED 4½" PEDESTAL TO 4"

	INITIALS	DATES
Designed by	CG	4-7-75
Checked by	R.K.	4-7-75
Quantities by		
Checked by		
Supervised by		

FLORIDA DEPARTMENT OF TRANSPORTATION
TRAFFIC DESIGN
TRAFFIC CONTROL DEVICES FOR MOVEABLE SPAN BRIDGE SIGNALS

Approved by _____
STATE DESIGN ENGINEER-RDWY.

DRAWING NO. 2 OF 3 | INDEX NO. 17890

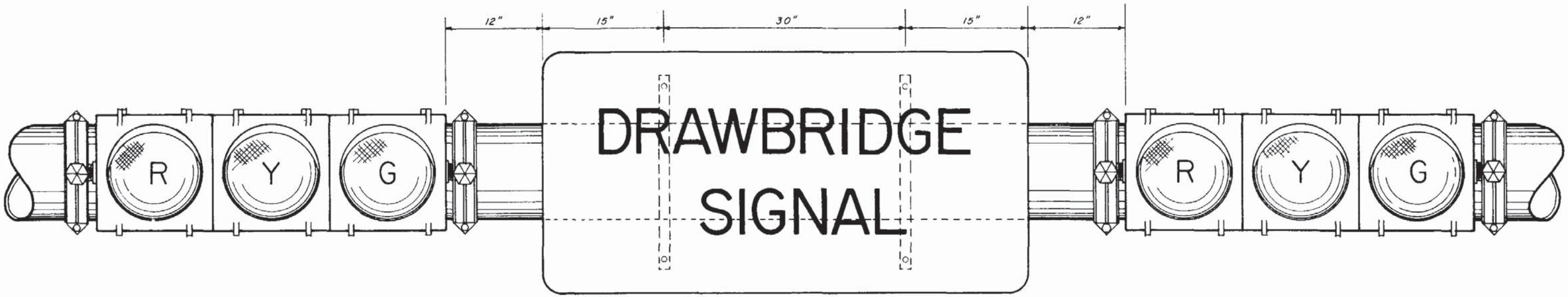

2'-6" X 5'-0"
2" BORDER - 4" RADIUS
6" SERIES "D" LETTERS

BLACK OPAQUE LEGEND AND BORDER ON REFLECTORIZED YELLOW BACKGROUND

TO BE USED WITH TYPE I OPERATION, AS SHOWN ON PREVIOUS SHEET

MONOTUBE SUPPORT MOUNTING

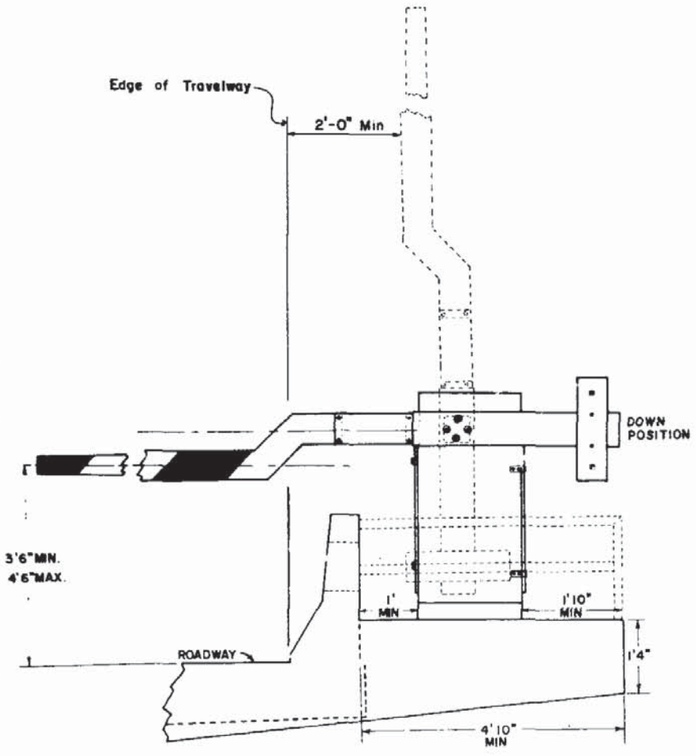

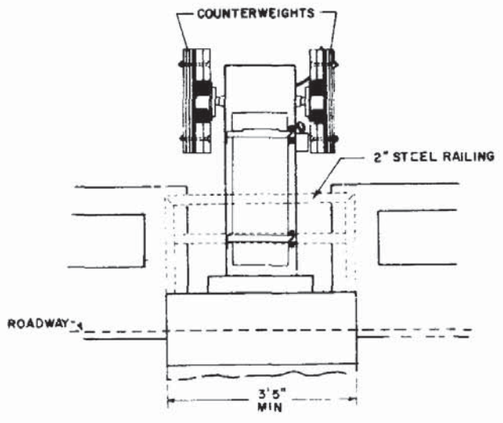

GATE & ARM DETAIL

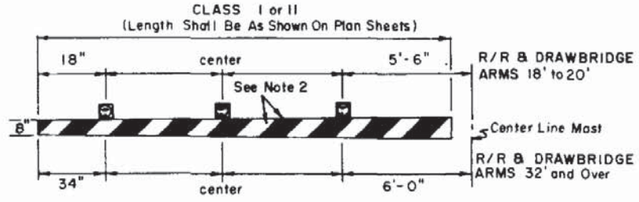

NOTE
1. 12 Volt Flashing Red Lights Shall Be Mounted Atop Gate Arm And Shall Operate In The Flashing Mode Only When Gate Arm Is In The Lowered Position Or In The Process Of Being Lowered. The Number Of Lights Shall Vary According To Length Of The Gate Arm.
2. 16" Alternate Diagonal Fully Reflectorized Red And White Stripes.

TYPICAL LAMP PLACEMENT

FLORIDA DEPARTMENT OF TRANSPORTATION
TRAFFIC DESIGN
TRAFFIC CONTROL DEVICES FOR MOVEABLE SPAN BRIDGE SIGNALS

REVISIONS		
DATE	INITIALS	DESCRIPTION
12/22/75	JG	DELETED NOTE "AVAILABLE GAINESVILLE WAREHOUSE"
7-20-76	CEJ	ADDED CLASS I & CLASS II TITLE AND REVISE TITLE BLOCK
10-6-78	J.M.C.	REVISED GATE ARM DETAIL
10-30-79	JJ	Added Ct from Travelway And 12 V. Lights to Arm

	INITIALS	DATES
Designed by	J.M.C.	
Checked by		
Quantities by		
Checked by		
Supervised by		

Approved by [signature]
STATE DESIGN ENGINEER - RDWY

DRAWING NO 3 OF 3
INDEX NO 17890