NOTES

1. Work this Index with the Noise Wall Data Tables, and Wall Control Drawings in the Plans.
   A. Prestressed concrete posts with equivalent strength resistance may be substituted for conventionally reinforced precast posts shown in this standard, when approved as part of a Producer's Quality Control Plan.
   B. Producer shop drawings for prestressed concrete post designs must be approved by the State Structures Design Office prior to inclusion in the Quality Control Plan.

2. Construct Noise Walls in accordance with the requirements of Specification Section 534, and Augers Cast Piles in accordance with Specification Section 455.

3. Field verify the location of all overhead and underground services shown in the Wall Control Drawings.

4. Wall Height is the nominal height of the walls above finished grade. The Wall Embedment Depth for design is 1'-0". The actual embedment depth may vary plus or minus 6" along the length of the wall.

5. Post Spacing in this Index are nominal, and are measured from centerline to centerline of the auger cast piles. Actual post spacing may vary as shown in the Wall Control Drawings.

6. Panels:
   A. The sum of the individual stacked panel heights is the Wall Height plus 1'-0" (embedment depth).
   B. Where special graphics are required, locate the horizontal panel joints outside of the graphics. Where possible, hold horizontal panel joints at a constant elevation.
   C. Side Installed Panels are only permitted when reduced overhead clearance between posts prohibits installing panels from the top.
      1. For Flush Face panels, install panel into posts from the roadway (front face) of the wall. Recessed panels may be installed from the back face of the wall.
      2. After panels are installed and centered between posts, grout between both panel ends and the adjoining posts (see Sheets 4 and 5 for details).
   D. Individual panel heights should be between 6'-0" and 12'-0" tall. The minimum panel height is 4'-0" and may be used where overhead clearance is limited, or where graphic panels are required on shorter walls.
7. Concrete And Grout:
   A. Concrete Class and Compressive Strength for:
      1. Precast Panels, Posts, and Post Caps: Class IV
      2. Cast-In-Place Collars: Class IV
   B. Minimum Compressive Strength for form removal and handling of posts and panels:
      1. 2,500 psi for horizontally cast post and panels
      2. 2,000 psi for vertically cast panels or when tilt-up tables are used for horizontally cast panels.
   C. Grout for Auger Cast Piles:
      1. Maximum Working Compressive Strength = 2,000 psi
      2. Minimum 28 day strength = 5,000 psi

8. Reinforcing Steel:
   A. In addition to the requirements of Specification Section 415, tie post and pile stirrups at the following locations as a minimum:
      1. Post Stirrups Tie at all four corner bars and at every third interior bar intersection.
      2. Pile Stirrups Tie to the main vertical reinforcing at alternate intersections for circular configurations and at the four corners and at every third interior bar intersection for rectangular configurations.
   B. Provide 2" concrete cover unless noted otherwise.

9. Casting Tolerances for precast panels and posts:
   A. Overall Height and Width: +/- ¼"
   B. Thickness: +/- ¼"
   C. Plane of side mold: +/- 1/16"
   D. Openings: +/- ½"
   E. Out of Square: 1/8" per 6 ft., but not more than 3/8"total along any side
   F. Warping: 1/16" per foot distance to nearest corner
   G. Bowing: 1/240 panel dimension
   H. Surface Smoothness for Type "A" Smooth Surface Texture Option: +/- 1/16"

10. Provide Plain or Fiber Reinforced Bearing Pads meeting the requirements of Specification Section 932 for Ancillary Structures.
    A. For Collar Bearing Points provide:
       1. 4"x 4"x ½" Fiber Reinforced Pads;
       2. Plain Pads with a may be substituted for Fiber Reinforced Pads when sufficient bearing area is available on the concrete collar for the following:
          a. 10' Post Spacing: 4"x 4"x ½"
          b. 20' Post Spacing and Wall Height < 17 feet: 4"x 4"x ½"
          c. 20' Post Spacing and Wall Height ≥ 17 feet: 4"x 5"x ½"
    B. At panel bearing points between stacked panels, use Plain or Fiber Reinforced Bearing Pads.

GENERAL NOTES

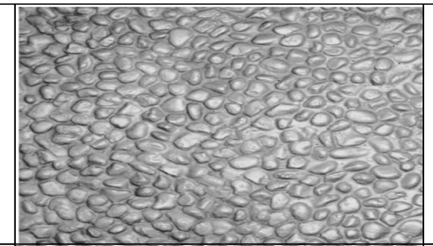

Type "A"
SMOOTH

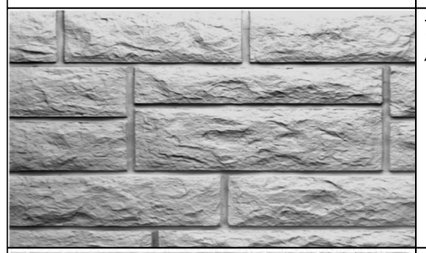

Type "B"
ASHLAR STONE

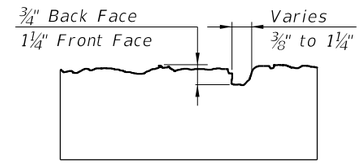

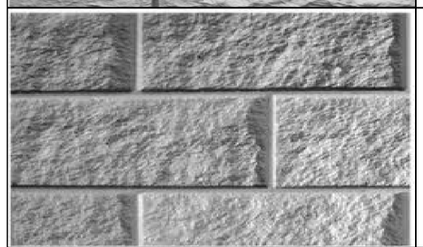

Type "C"
SPLIT FACE RUNNING BOND BLOCK

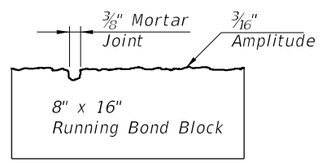

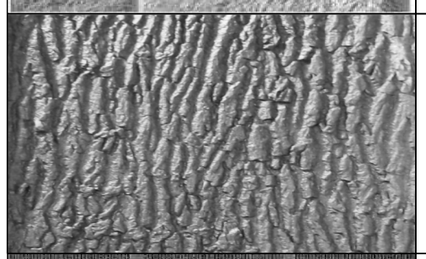

Type "D"
FRACTURED GRANITE

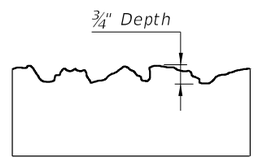

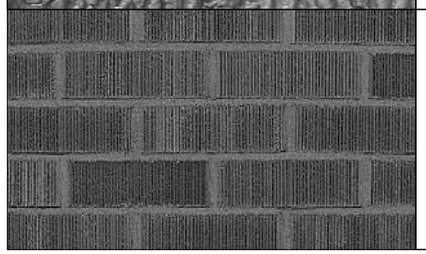

Type "E"
WIRE-CUT BRICK

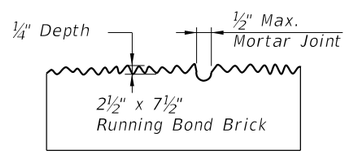

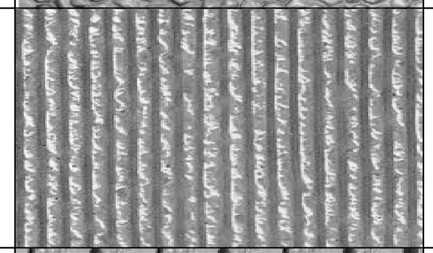

Type "F"
PEA GRAVEL

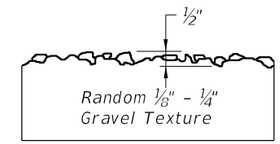

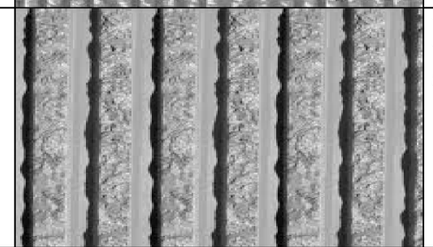

Type "G"
VERTICAL FRACTURED FIN

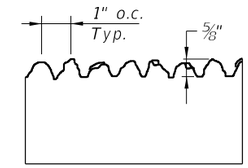

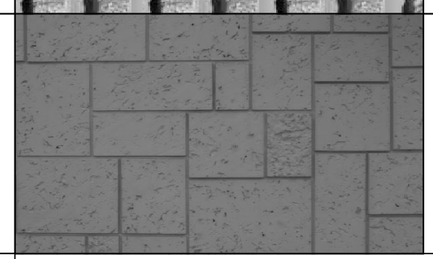

Type "H"
TRAPEZOID VERTICAL FINS W/ FRACTURED FACE (COLORADO DRAG AGGREGATE)

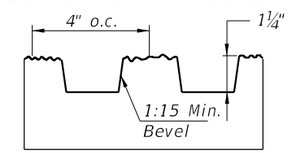

Type "I"
CUT CORAL BLOCK (RUNNING BOND)

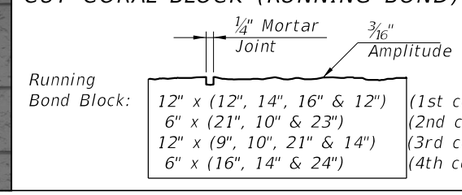

NOTES:

1. Surfaces shall be formed, rolled, or pressed using form liners in accordance with the Plans and Specifications for Class 3 Surface Finish.
2. See Noise Wall Data Tables for project aesthetic requirements.

TEXTURE OPTIONS

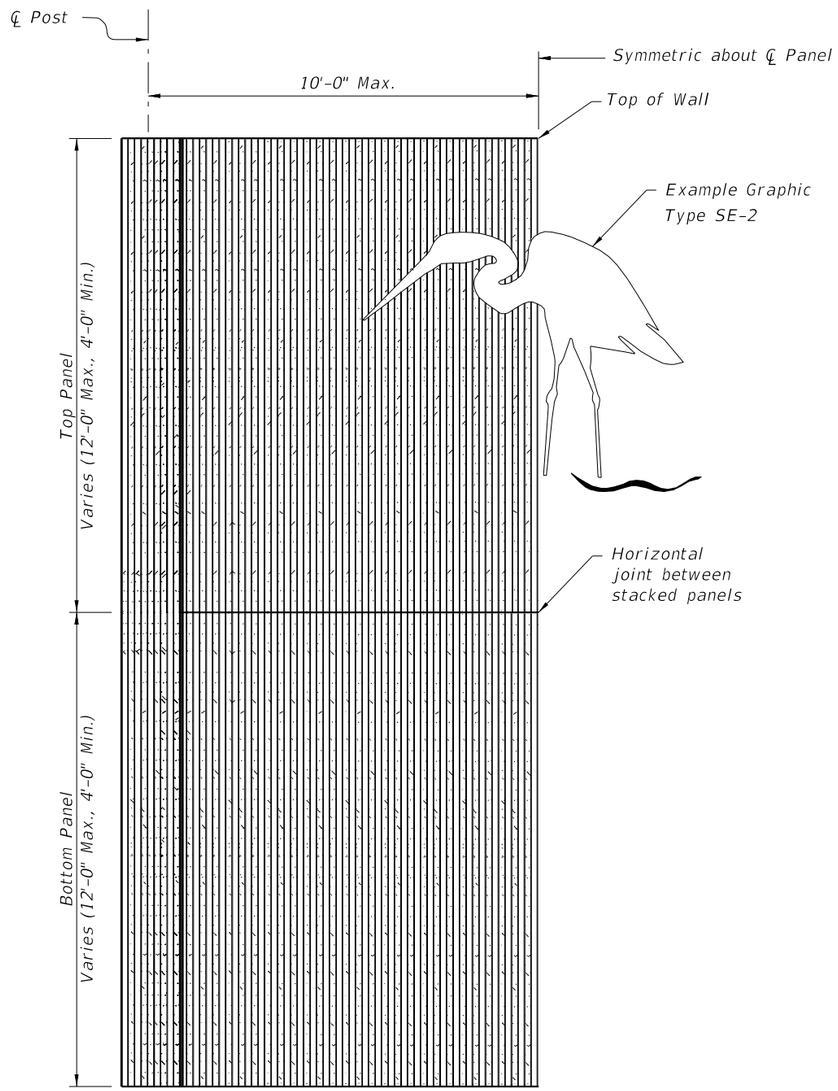

HALF ELEVATION
(Front Face Post and Panel Texture Type "H" shown)
(Graphic Type SE-2 shown)
(Two stacked panels shown, three stacked panels similar)

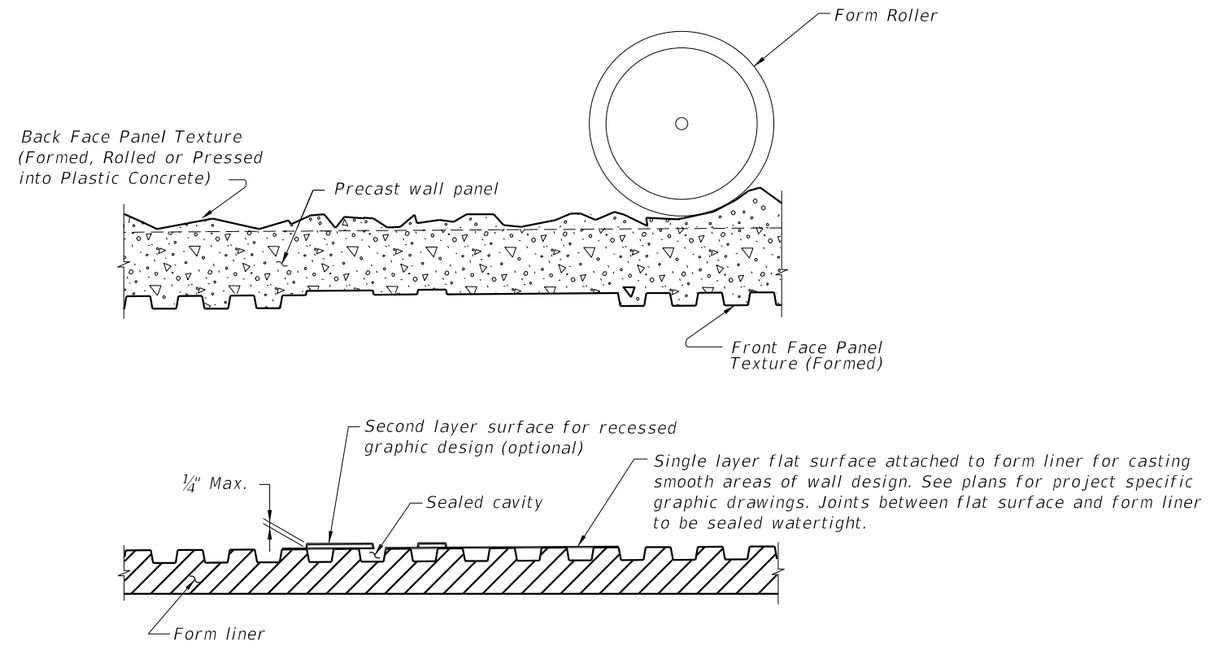

TYPICAL FORMING DETAIL
(Front Face Panel Texture Type "H" shown)
(Back Face Panel Texture Type "D" shown)
(Post Forming Details Similar)

NOTES:

1. Submit specific form liner samples for approval by the Engineer.

2. Textures and graphics shown are for demonstration purposes only. See Noise Wall Data Tables in the plans for project specific texture and graphic requirements.

GRAPHICS & TEXTURE DETAILS

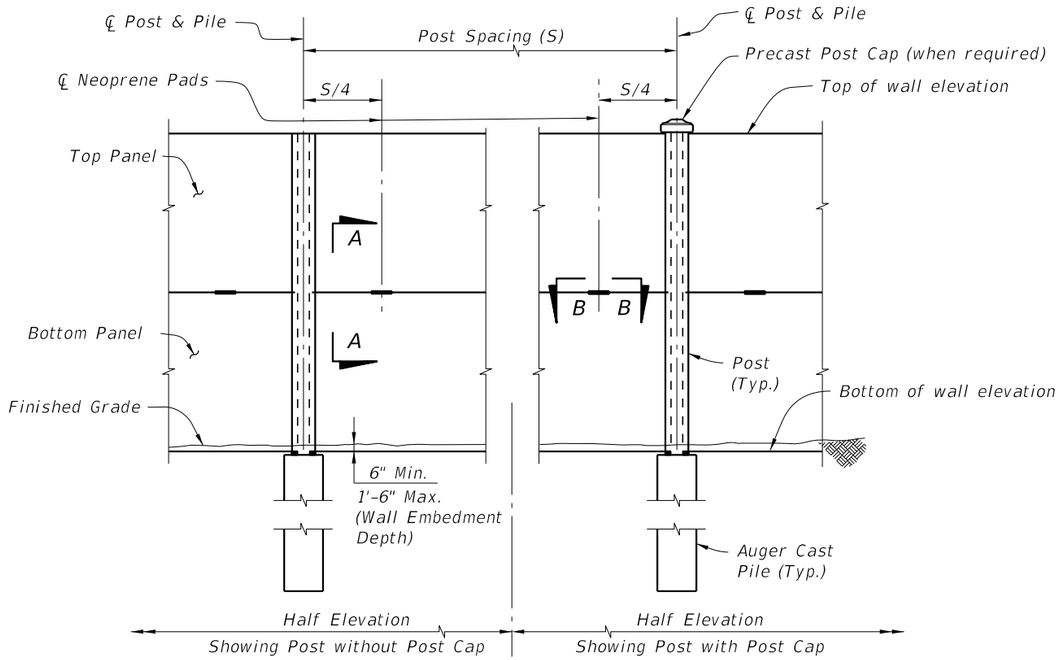

TYPICAL ELEVATION

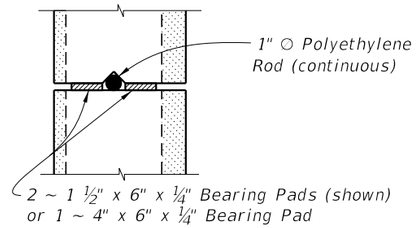

SECTION A-A

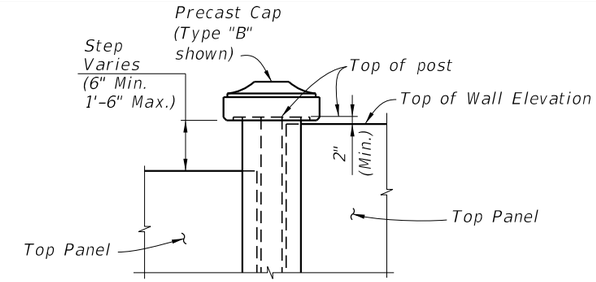

WITH POST CAP

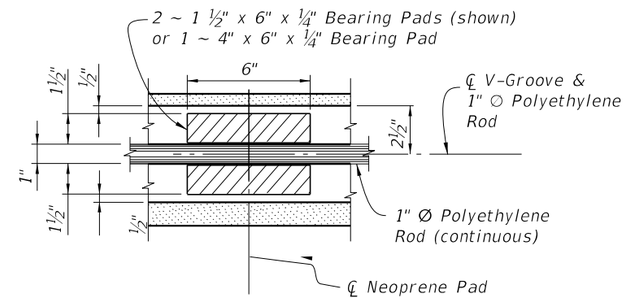

SECTION B-B

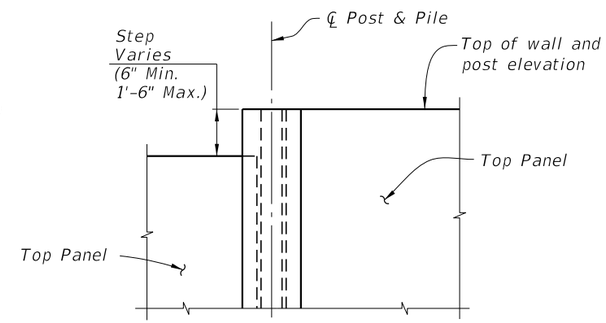

WITHOUT POST CAP

ELEVATION STEP AT TOP OF WALL

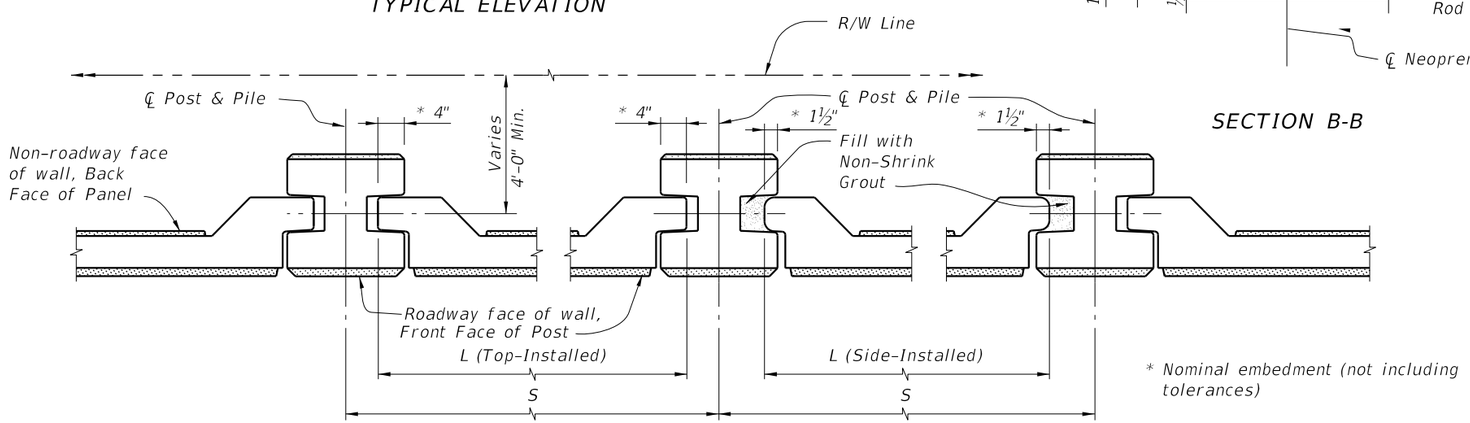

PLAN
(Showing Flush Panel)

* Nominal embedment (not including tolerances)

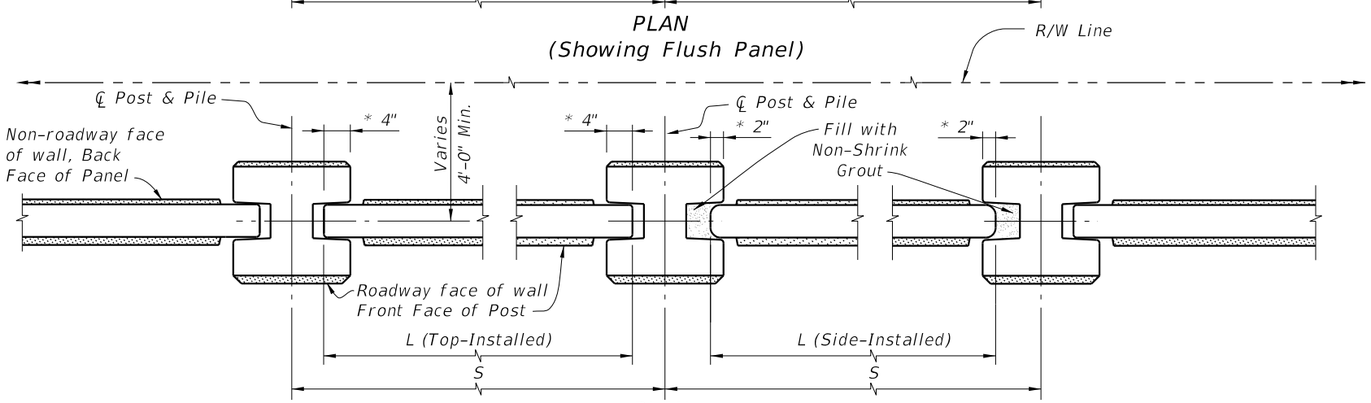

PLAN
(Showing Recessed Panel)

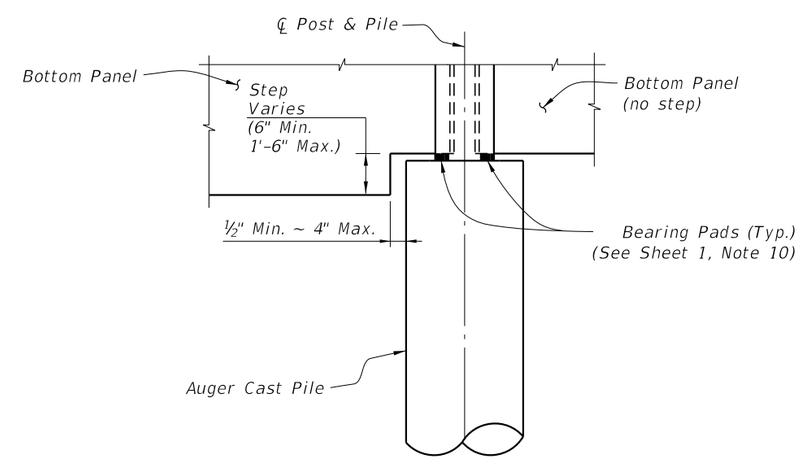

ELEVATION STEP AT BOTTOM OF WALL

Note:
See the plans for required post spacings (S).

TYPICAL DETAILS

10/26/2016 8:33:52 AM

LAST REVISION	REVISION	DESCRIPTION:			INDEX NO.	SHEET NO.
11/01/16			FY 2017-18 DESIGN STANDARDS	PRECAST NOISE WALLS	5200	4 of 16

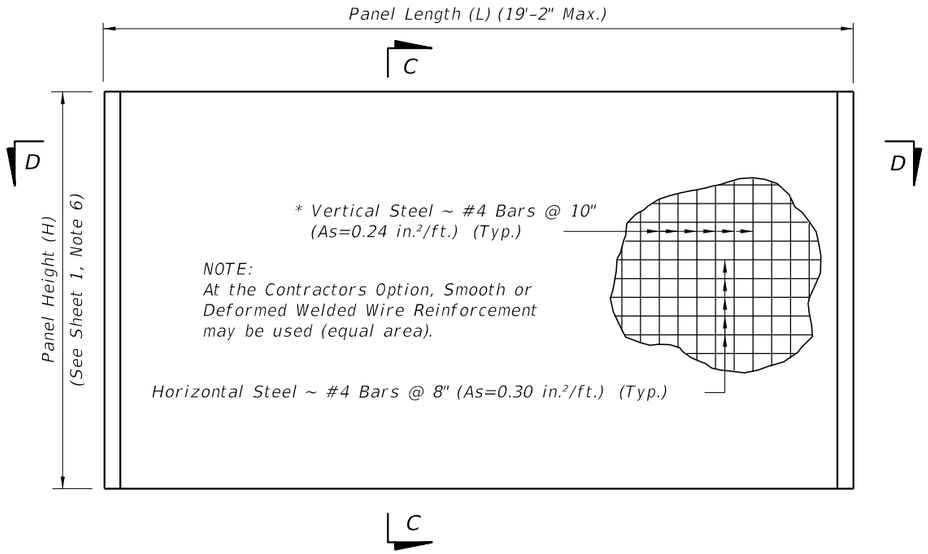

TYPICAL PANEL ELEVATION

* In lieu of utilizing the standard pick up points below, panels may be cast vertically or cast horizontally then tilted upright using tilt-tables prior to lifting from form. In this case, pick points must be placed in the top of panels only and transported maintaining the vertical orientation. If these criteria are met, the vertical steel may be reduced to #4 Bars @ 1'-3" (As=0.16 in.²/ft.).

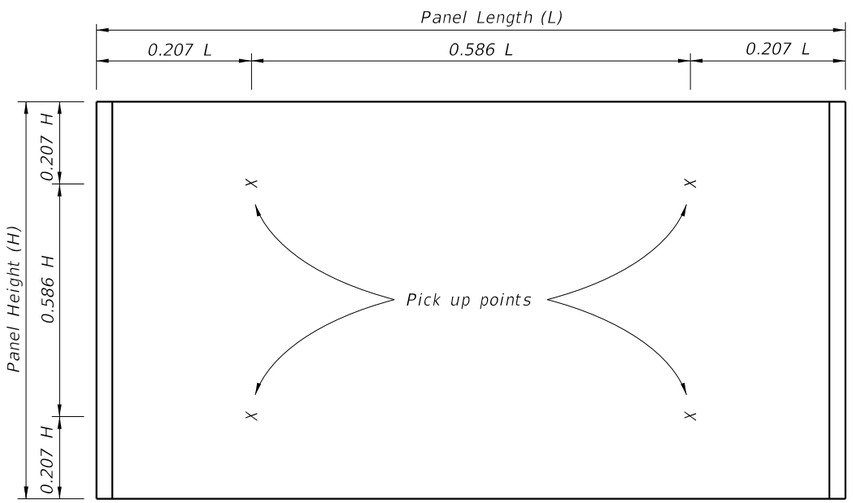

STANDARD PICK UP POINTS FOR PANELS
(Panels shall be rotated about long axis only)

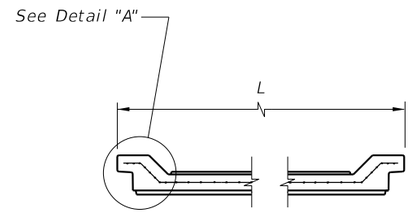

SECTION D-D
(Showing Flush Type Panel)

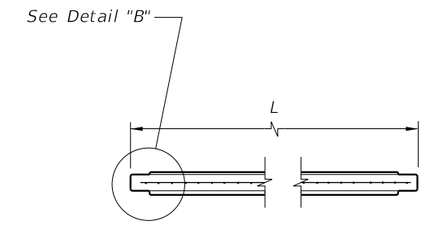

SECTION D-D
(Showing Recessed Type Panel)

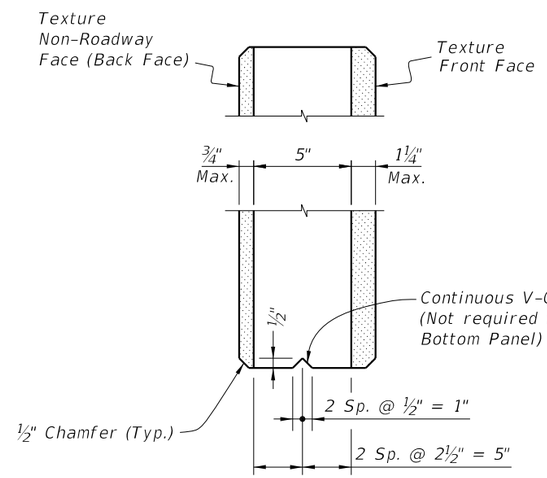

SECTION C-C

Notes:
1. See Sheet 3 for allowable methods of applying textures.
2. See plans for panel type and aesthetic requirements.
3. For equal post spacing, side-installed panel length will be shorter than top-installed Panel length.

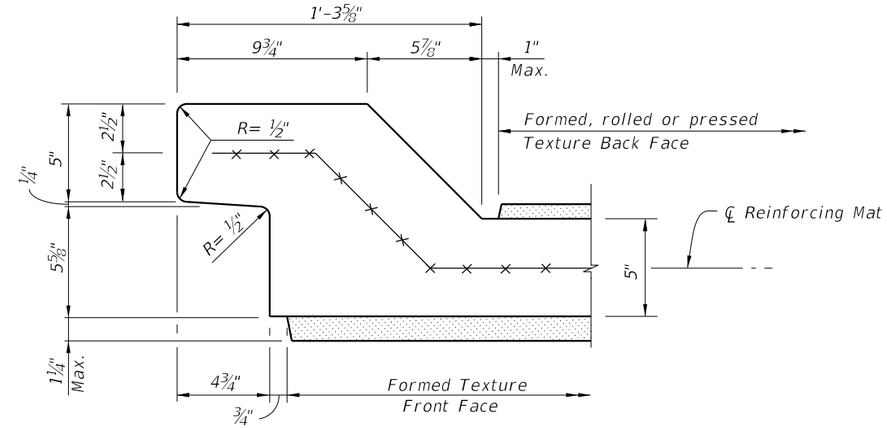

DETAIL "A" - TOP-INSTALLED
(Typical both ends)

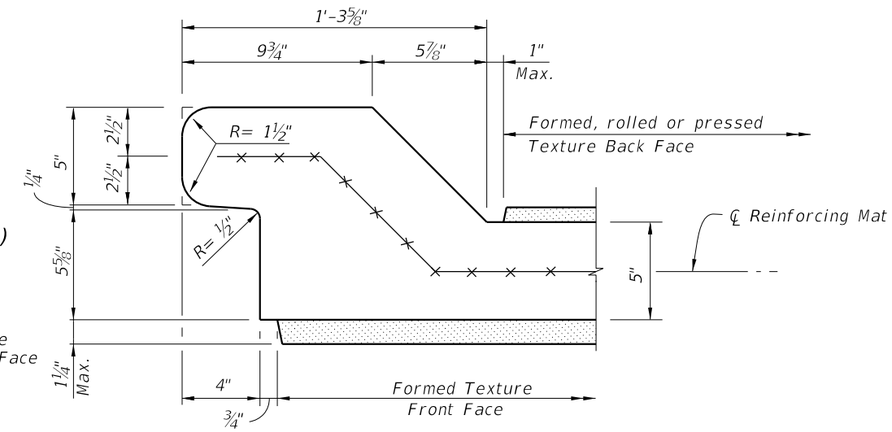

DETAIL "A" - SIDE-INSTALLED
(Typical both ends)

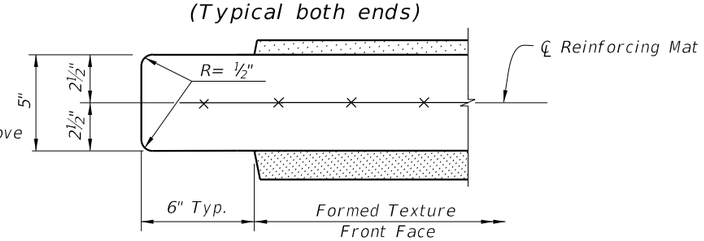

DETAIL "B" - TOP-INSTALLED
(Typical both ends)

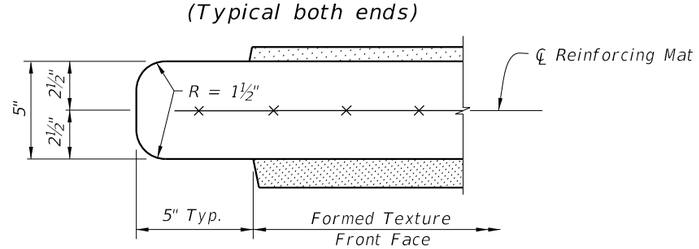

DETAIL "B" - SIDE-INSTALLED
(Typical both ends)

TYPICAL PANEL DETAILS

10/26/2016 8:33:54 AM

LAST REVISION	REVISION	DESCRIPTION:			INDEX NO.	SHEET NO.
07/01/15			FY 2017-18 DESIGN STANDARDS	PRECAST NOISE WALLS	5200	5 of 16

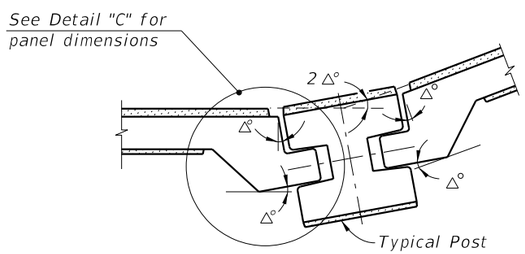

CASE 1
(Interior Angle)

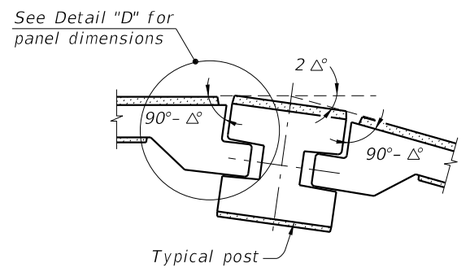

CASE 2
(Exterior Angle)

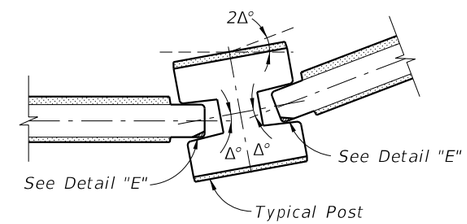

CASE 1
(Interior Angle)

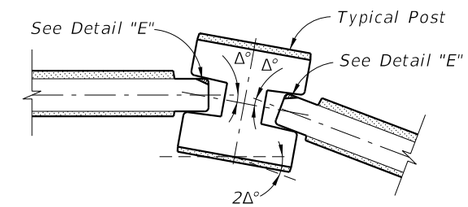

CASE 2
(Exterior Angle)

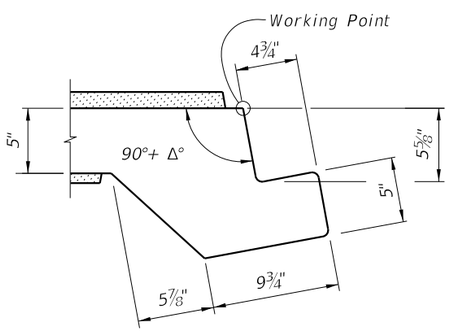

DETAIL "C"

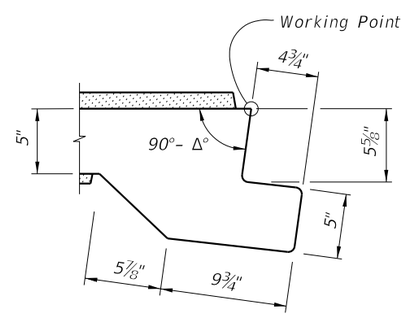

DETAIL "D"

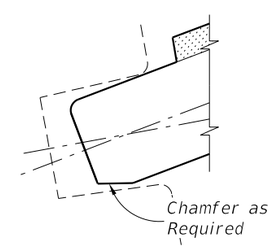

DETAIL "E"
(Back Face Chamfer Shown
Front Face Chamfer Similar)

NOTE:
The shop drawings shall include specific pivoting details of panel ends at locations where the deflection angle (2Δ°) between panels exceeds 7°.

PIVOTING DETAILS
(Flush Type Panel)

NOTE:
The shop drawings shall include specific pivoting details of panel ends at locations where the deflection angle (2Δ°) between panels exceeds 20°.

PIVOTING DETAILS
(Recessed Type Panel)

TYPICAL PANEL DETAILS

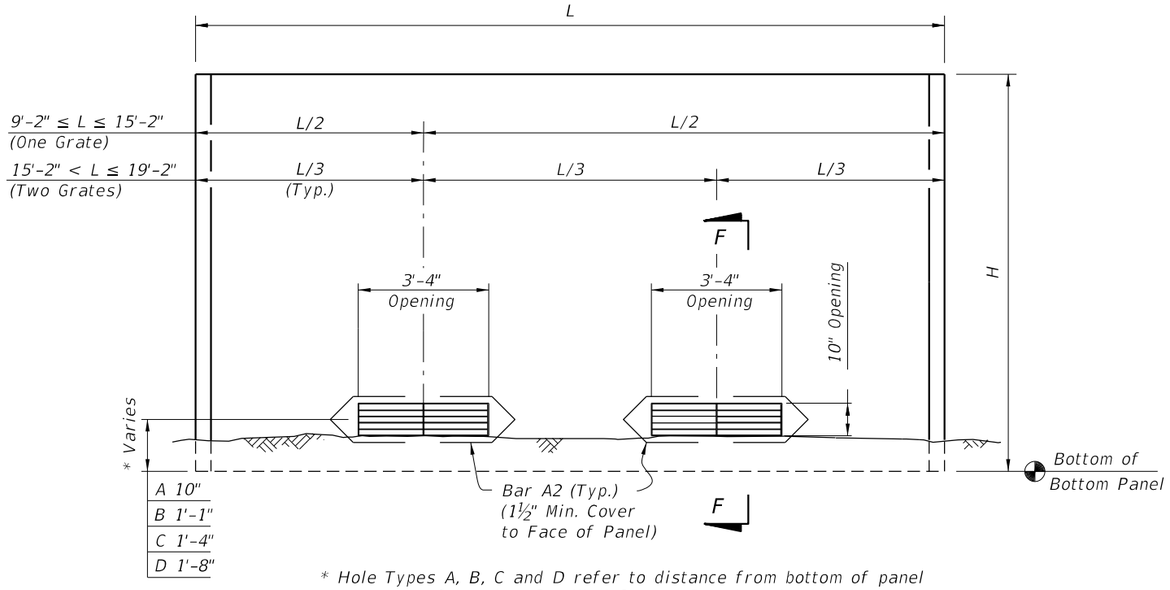

* Hole Types A, B, C and D refer to distance from bottom of panel to center of opening. See Wall Control Drawings in the plans.

DRAINAGE HOLES TYPES A, B, C & D
(Front Face of Wall Shown)
(Two Holes Shown,
One Hole Similar)

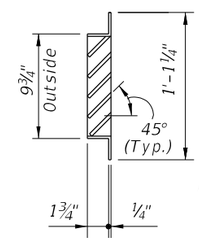

SECTION G-G

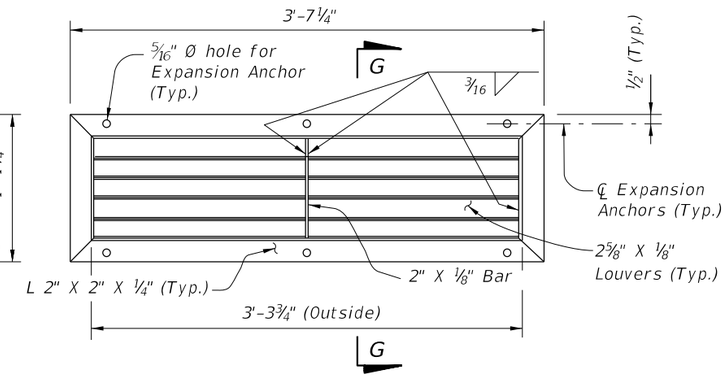

GRATING DETAIL

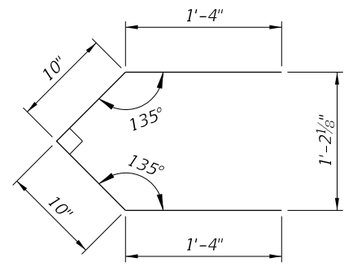

BAR A2 (Pair)
Bar Length = 4'-4"

BAR BENDING DETAILS (#3 Bars)

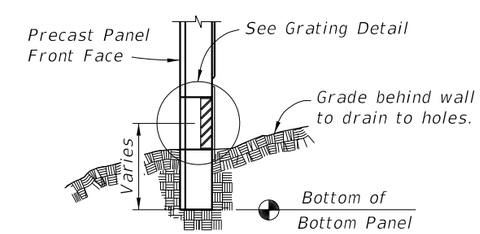

SECTION F-F

GRATING NOTES:

1. Grating shall be ASTM A36 steel welded in accordance with the current edition of ANSI/AWS D1.1 Steel Welding Code. Hot-dip galvanize grate after fabrication in accordance with Specification Section 962.
2. Expansion Anchors: Use ¼" Ø x 2" min. corrosion resistant (zinc/aluminum alloy or stainless steel) expansion anchors to connect grates to panels.
3. Grating mounted to back face of wall.
4. Blockout textured concrete surface for a strip 2" wide around hole for drainage grate placement.

DRAINAGE HOLE DETAILS

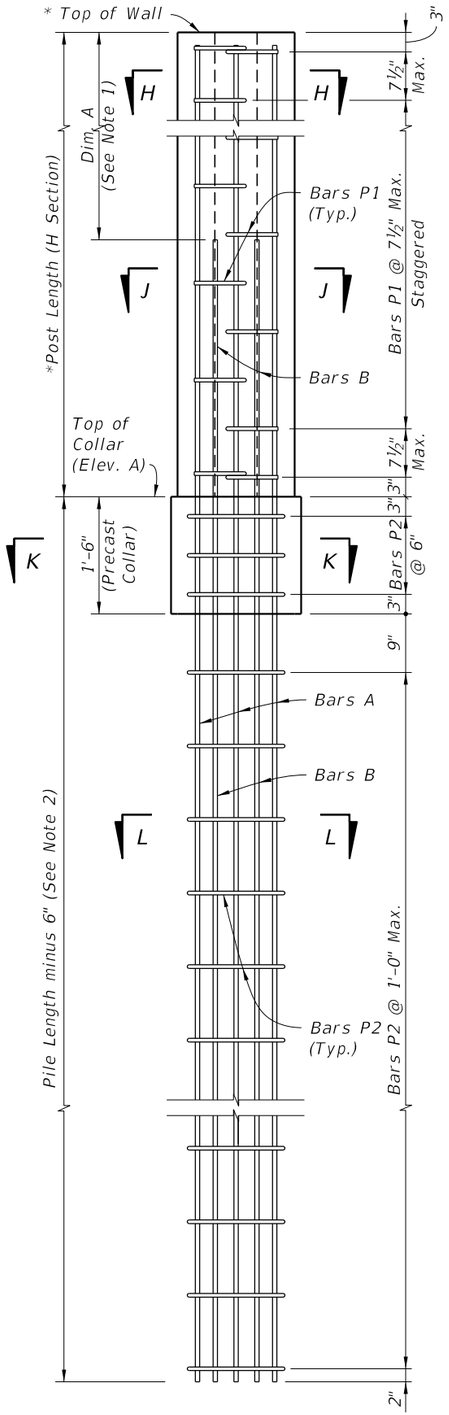

TYPICAL POST

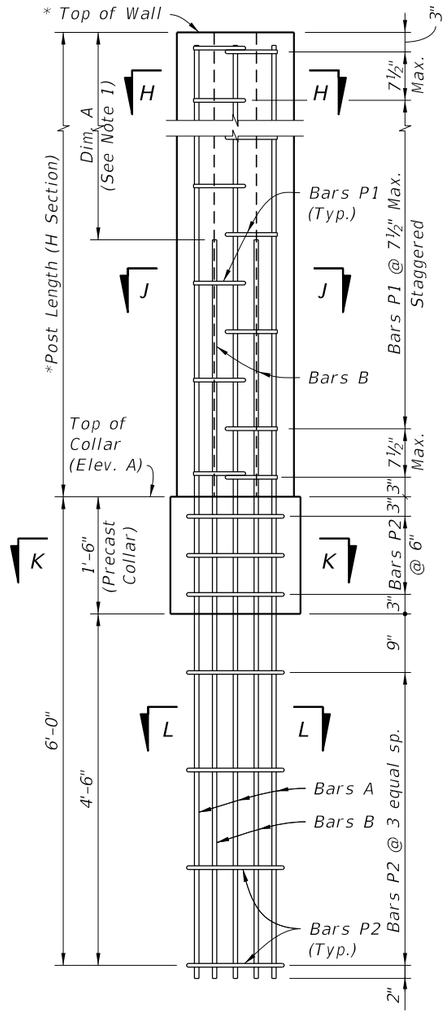

LOW CLEARANCE OPTION

* Extend Post 2" above top of high side wall panel when post caps are shown in plans. See Sheet 4, "ELEVATION STEP AT TOP OF WALL".

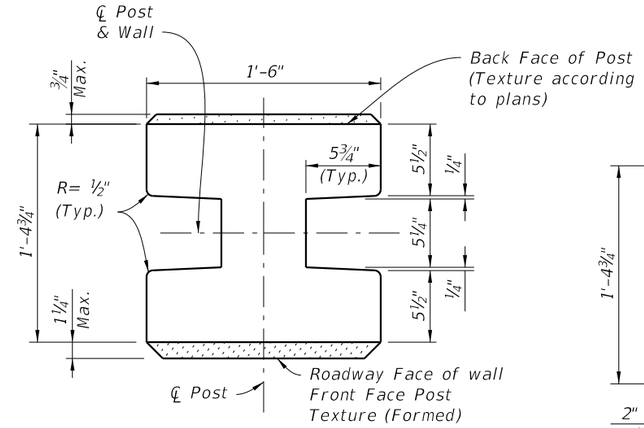

TYPICAL POST SECTION
(H Section)

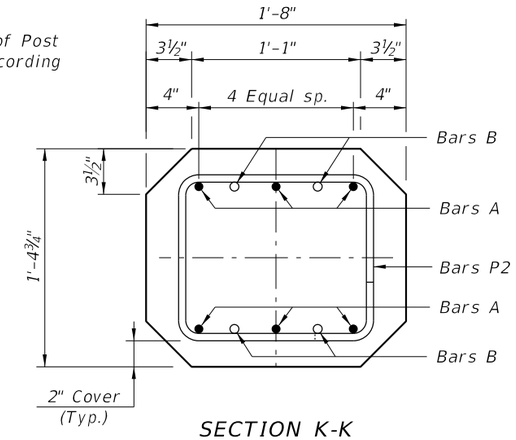

SECTION K-K
(Collar Section)

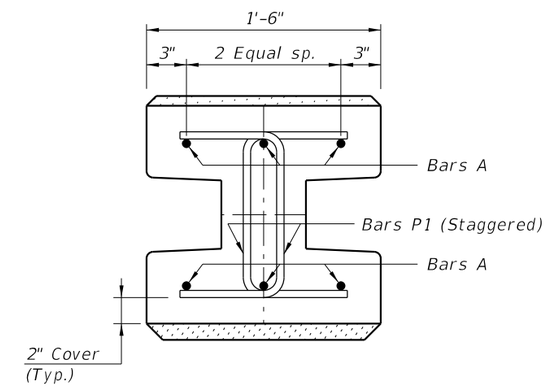

SECTION H-H

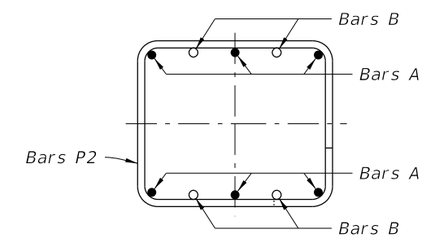

SECTION L-L

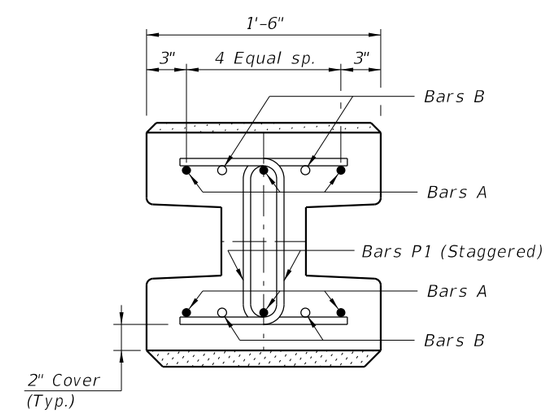

SECTION J-J

NOTES:
1. For Post Reinforcing see Sheets 15 and 16.
2. For Pile Lengths Tables see Sheets 15 and 16.

STANDARD POST REINFORCEMENT
(Standard Post Shown, 45° Corner Posts Similar)

STANDARD POST DETAILS

10/26/2016 8:34:01 AM

LAST REVISION	REVISION	DESCRIPTION:	FY 2017-18 DESIGN STANDARDS	PRECAST NOISE WALLS	INDEX NO.	SHEET NO.
11/01/16					5200	8 of 16

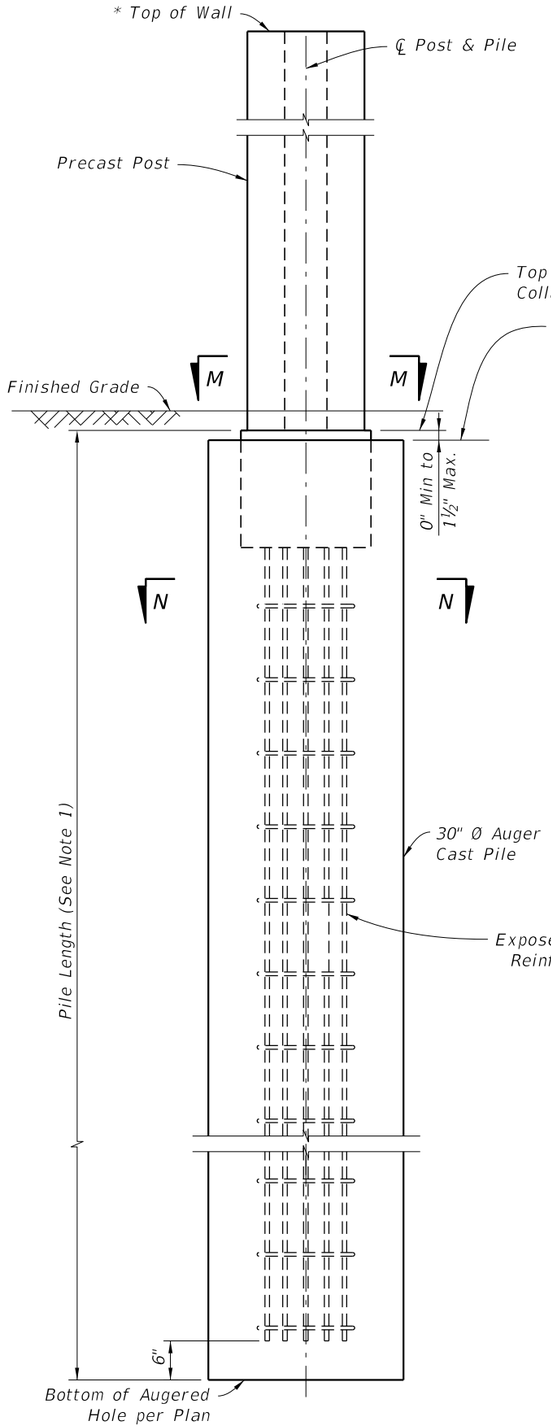

TYPICAL POST

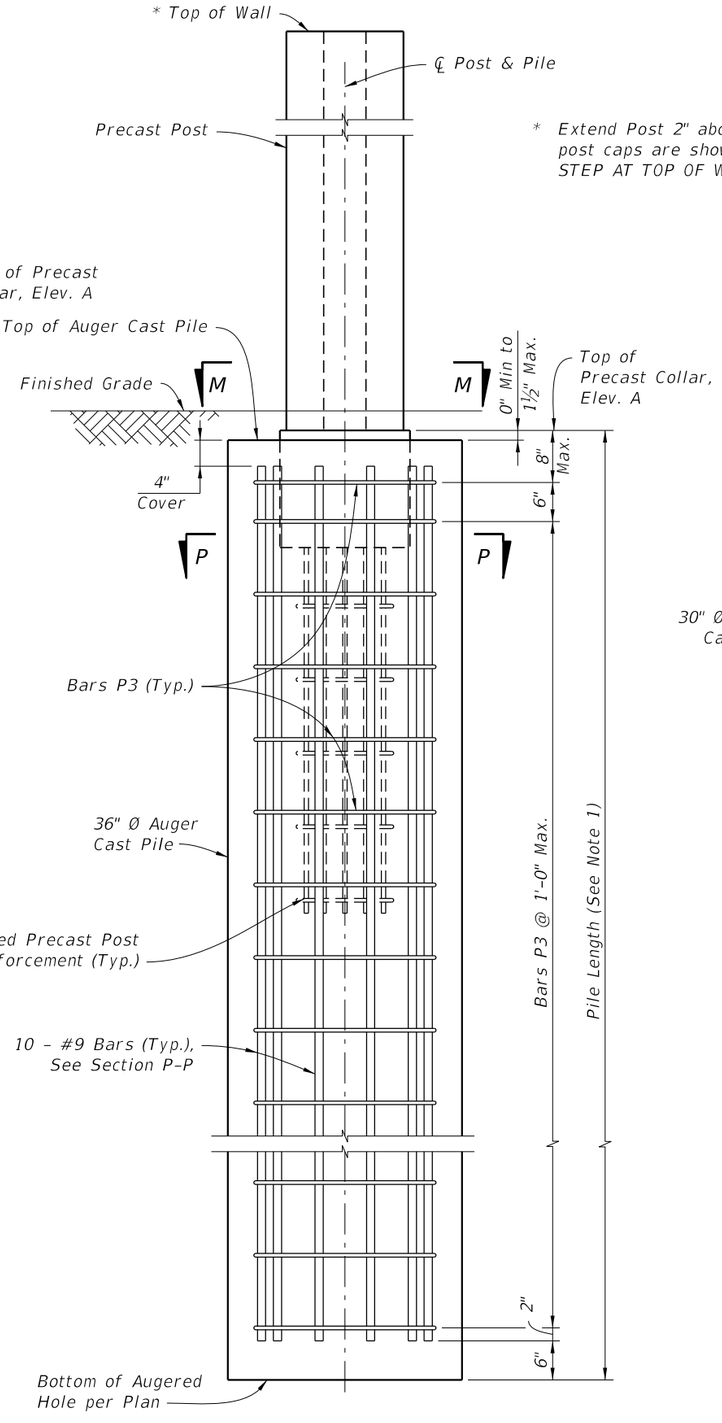

LOW CLEARANCE OPTION

STANDARD POST PLACEMENT IN AUGER CAST PILE
(H-Post Shown, 45° Corner Posts Similar)

* Extend Post 2" above top of high side wall panel when post caps are shown in plans. See Sheet 4, "ELEVATION STEP AT TOP OF WALL".

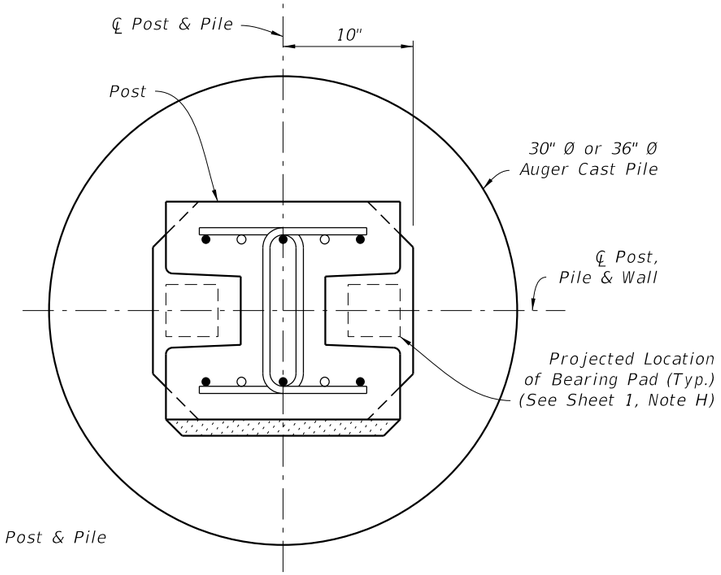

SECTION M-M

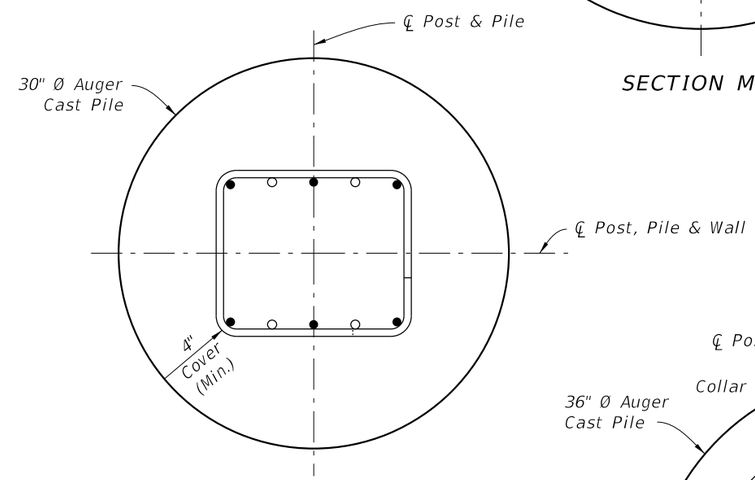

SECTION N-N

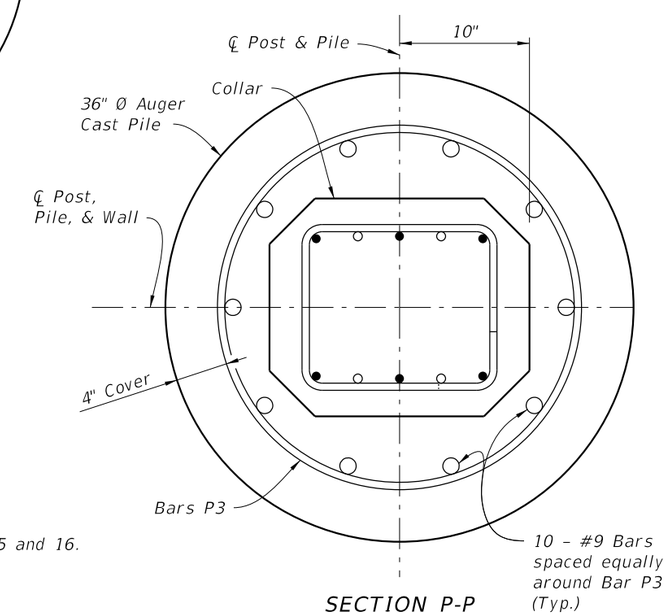

SECTION P-P
Low Clearance Option

NOTE:
1. For Pile Length Tables, see Sheets 15 and 16.

POST PLACEMENT & PILE REINFORCING STEEL DETAILS

10/26/2016 8:34:04 AM

LAST REVISION	REVISION	DESCRIPTION:	FY 2017-18 DESIGN STANDARDS	PRECAST NOISE WALLS	INDEX NO.	SHEET NO.
11/01/16					5200	9 of 16

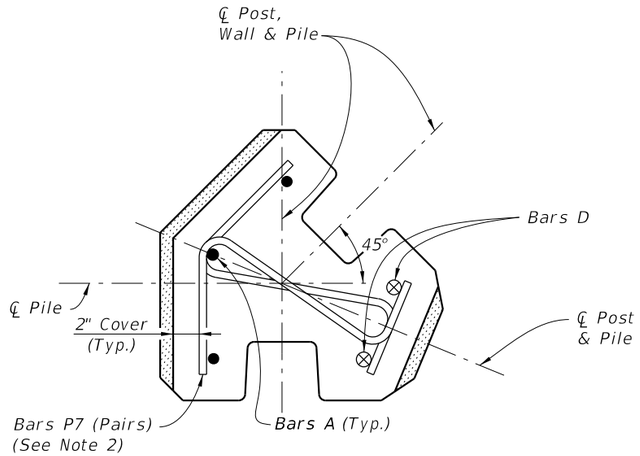

SECTION H-H
(45° Corner Post)

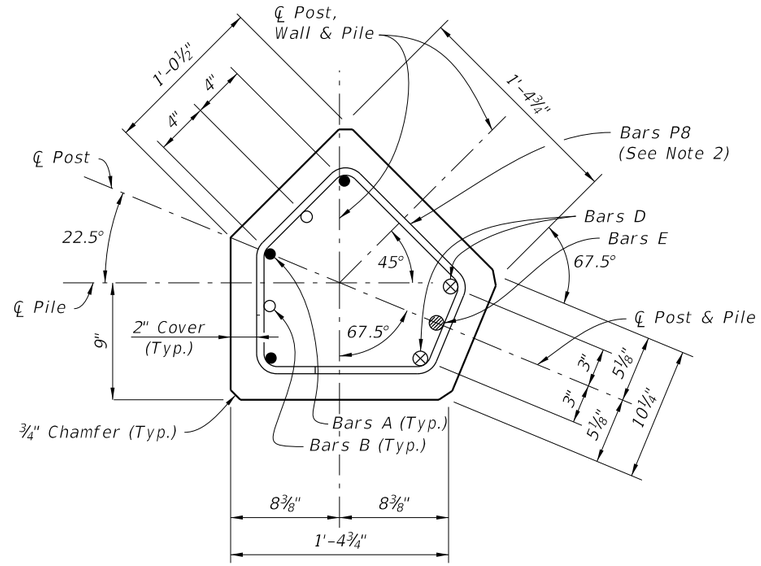

SECTION K-K
(Collar Section, 45° Corner Post)

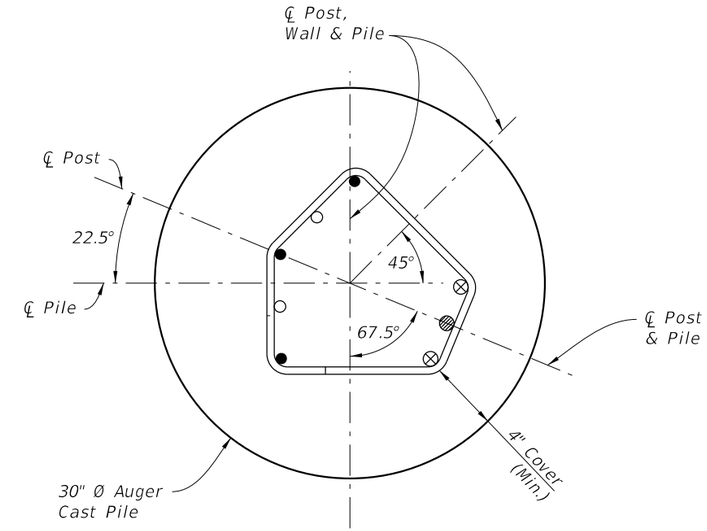

SECTION N-N
(45° Corner Post)

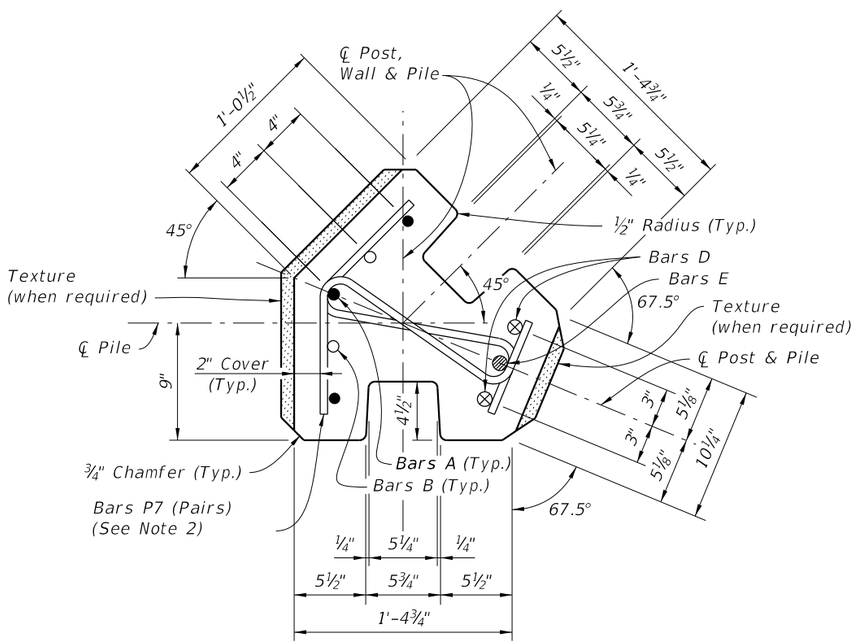

SECTION J-J
(45° Corner Post)

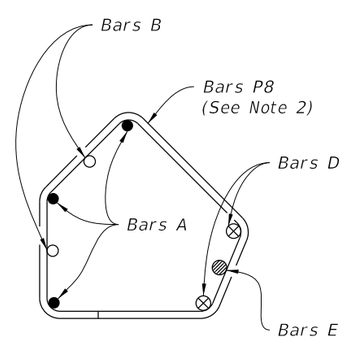

SECTION L-L
(45° Corner Post)

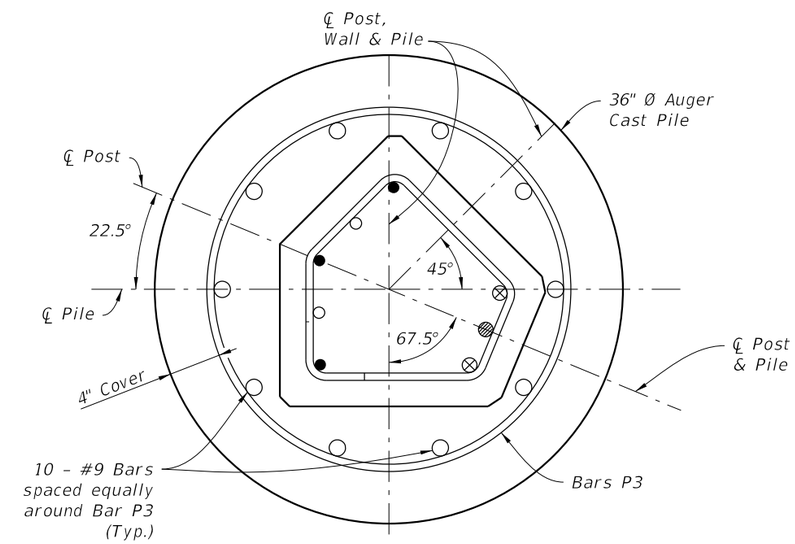

SECTION P-P
(45° Corner Post)

45° POST NOTES:

1. Reference Sheets 8 & 9 for location of Sections.
   Space Bars P7 as shown for Bars P1.
   Space Bars P8 as shown for Bars P2.
2. Match texture thickness with appropriate Panel face.
3. For Post Reinforcing, see sheets 15 & 16.
4. For Pile Length Tables, see sheets 15 & 16.

45° POST DETAILS

45° POST PLACEMENT IN AUGER CAST PILE

45° CORNER POST DETAILS

10/26/2016 8:34:06 AM

LAST REVISION	REVISION	DESCRIPTION:	FDOT FY 2017-18 DESIGN STANDARDS	PRECAST NOISE WALLS	INDEX NO.	SHEET NO.
07/01/14					5200	10 of 16

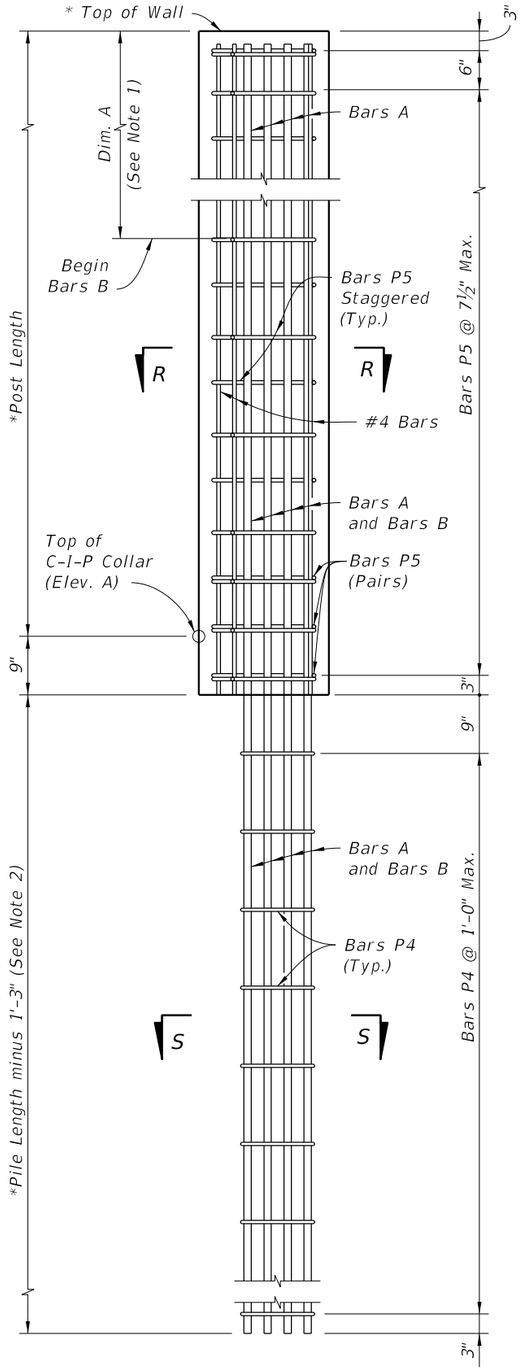

TYPICAL POST

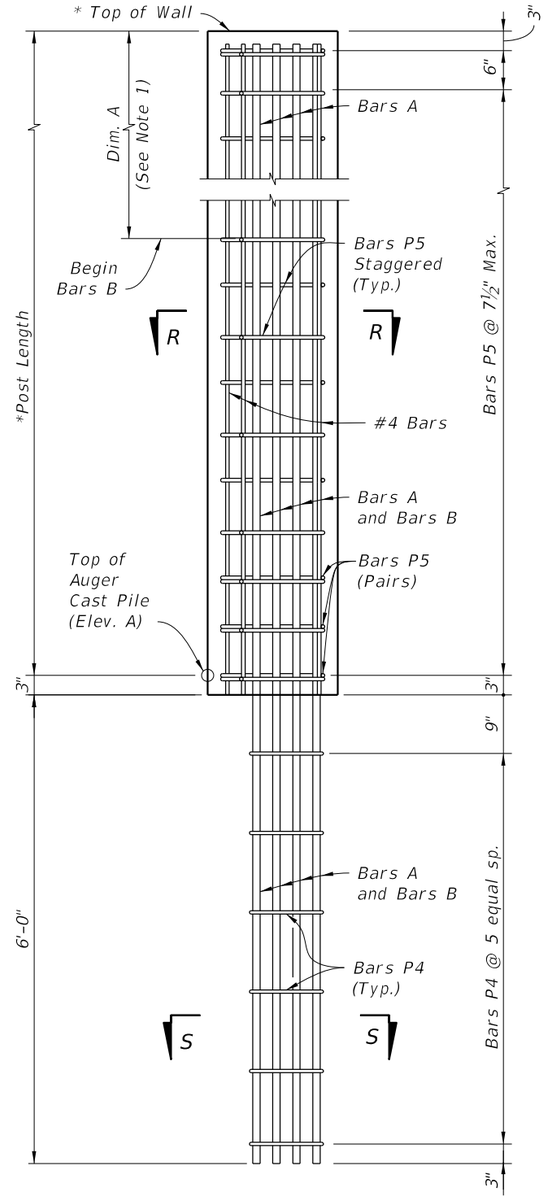

LOW CLEARANCE OPTION

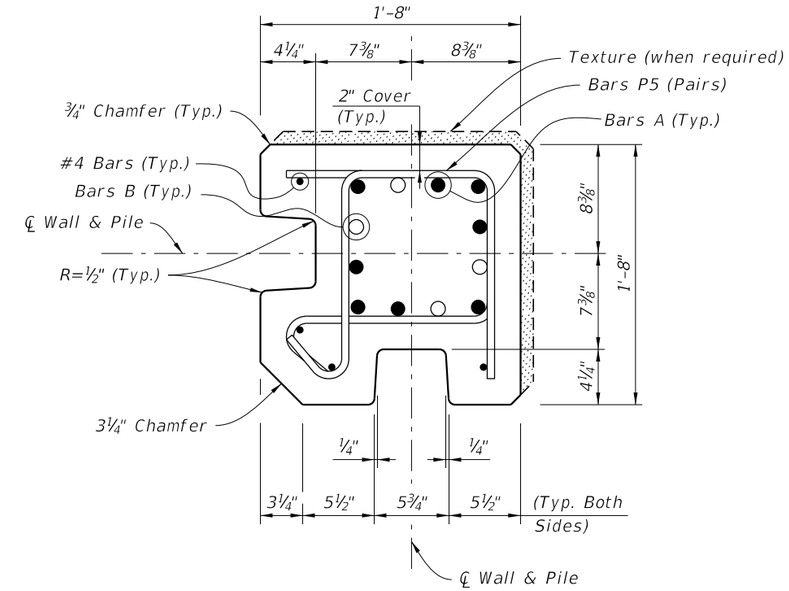

SECTION R-R

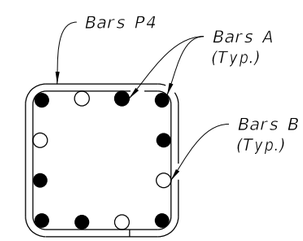

SECTION S-S

* Extend Post 2" above top of high side wall panel when post caps are shown in plans. See Sheet 4, "ELEVATION STEP AT TOP OF WALL".

90° CORNER POST NOTES:

1. For Post Reinforcing, see Sheets 15 and 16.
2. For Pile Length Tables, see Sheets 15 and 16.
3. Reduce typical panel length or adjust pile spacing at each 90° Corner Post.
4. Match texture thickness with appropriate Panel face.

90° CORNER POST REINFORCMENT
(Post Surface Features Not Shown For Clarity)

90° CORNER POST DETAILS

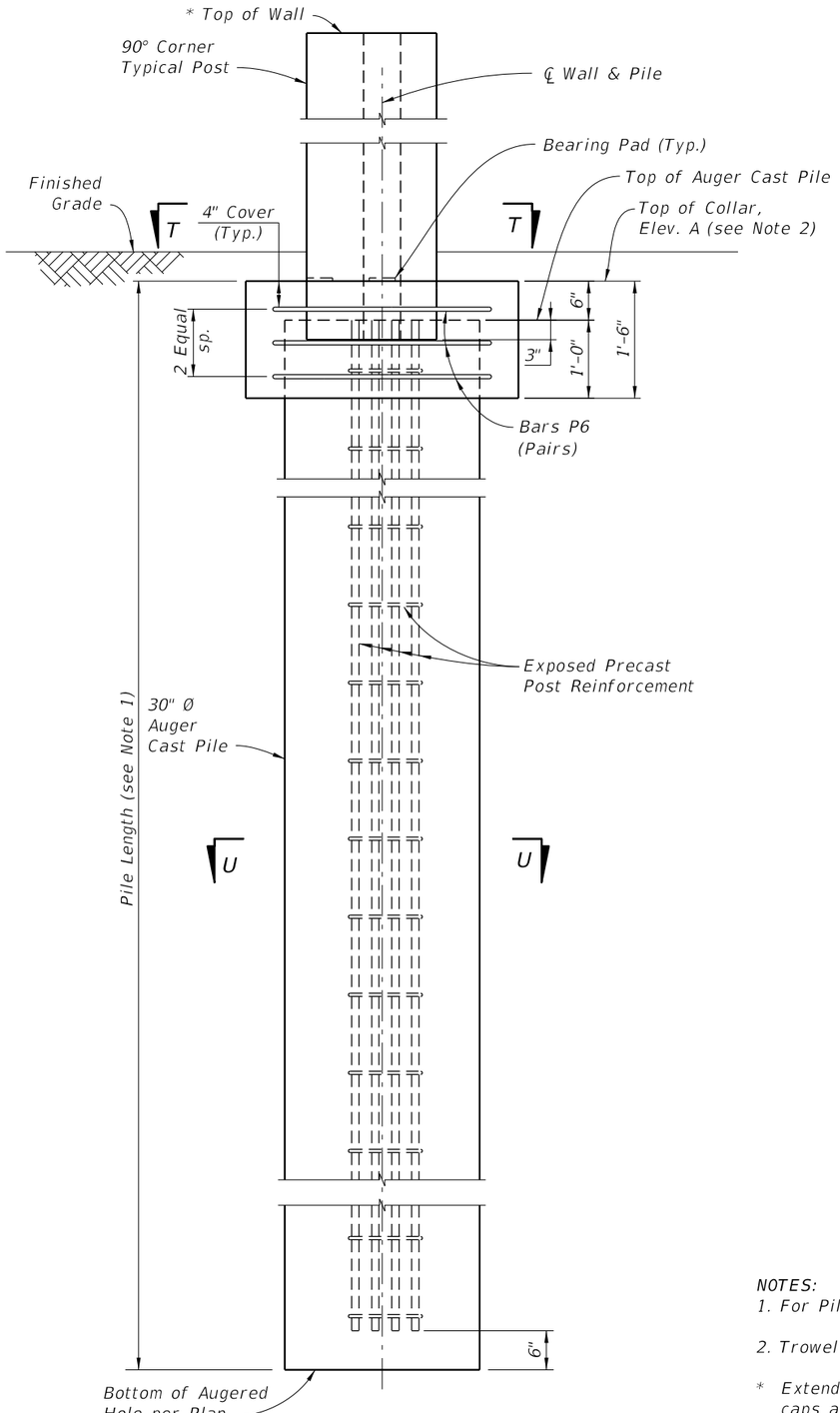

ELEVATION

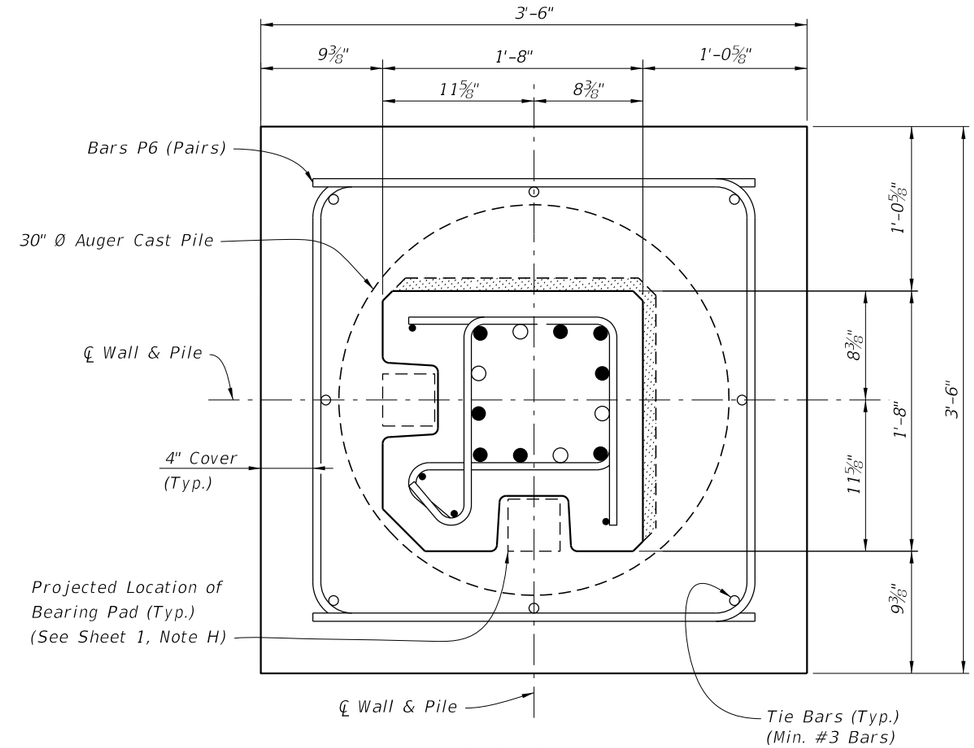

SECTION T-T
C-I-P COLLAR

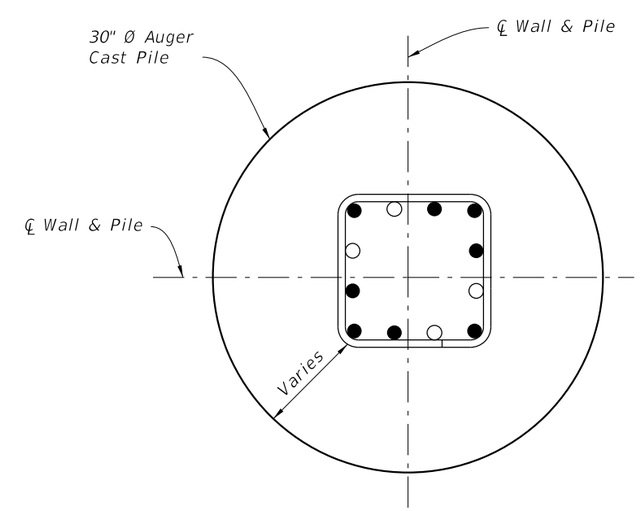

SECTION U-U

NOTES:

1. For Pile Length Tables, see Sheets 15 and 16.

2. Trowel Finish top of Collar to allow placement of Bearing Pads.

* Extend Post 2" above top of high side wall panel when post caps are shown in plans. See Sheet 4, "ELEVATION STEP AT TOP OF WALL".

90° CORNER TYPICAL POST PLACEMENT DETAILS

LAST REVISION	REVISION	DESCRIPTION:	FY 2017-18 DESIGN STANDARDS	PRECAST NOISE WALLS	INDEX NO.	SHEET NO.
07/01/12					5200	12 of 16

10/26/2016 8:34:11 AM

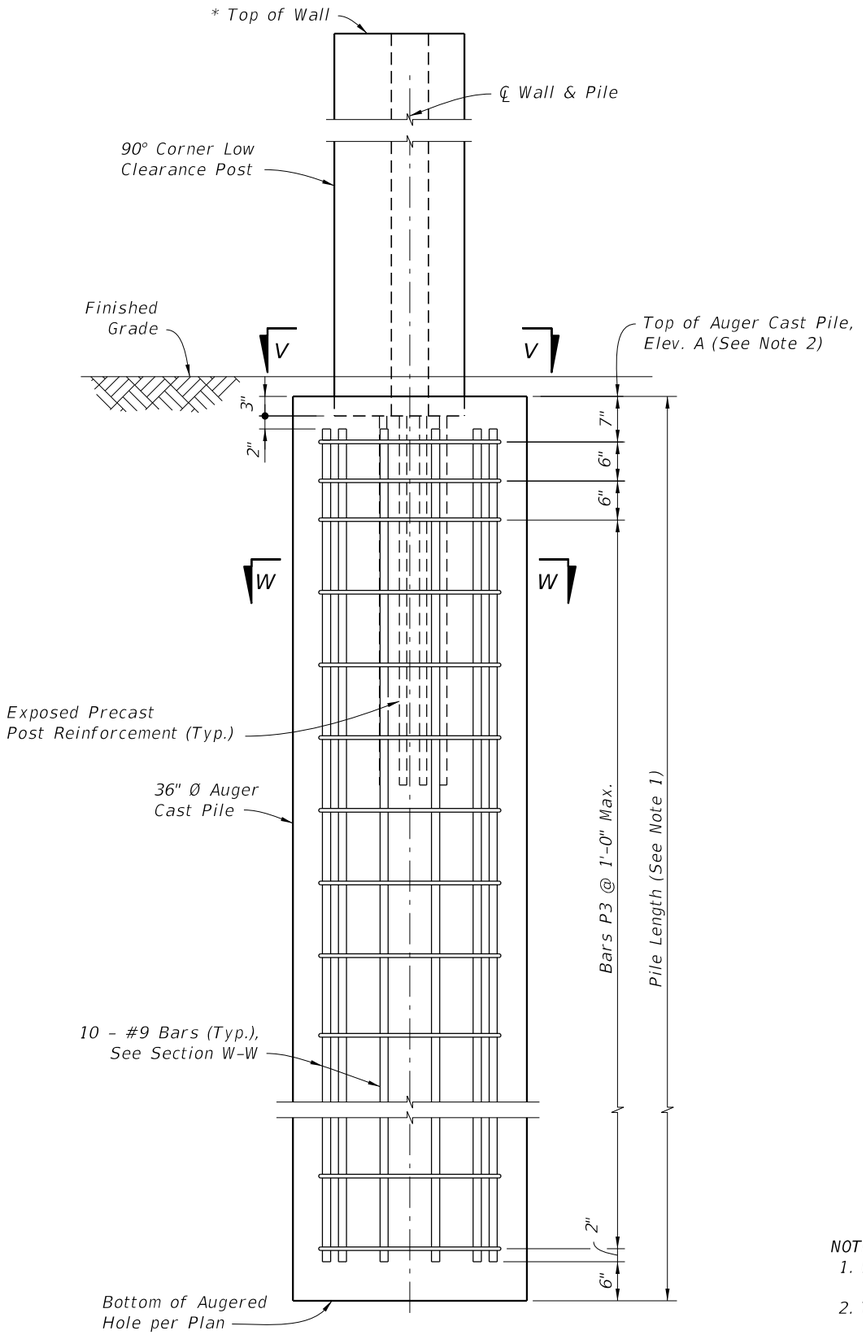

ELEVATION

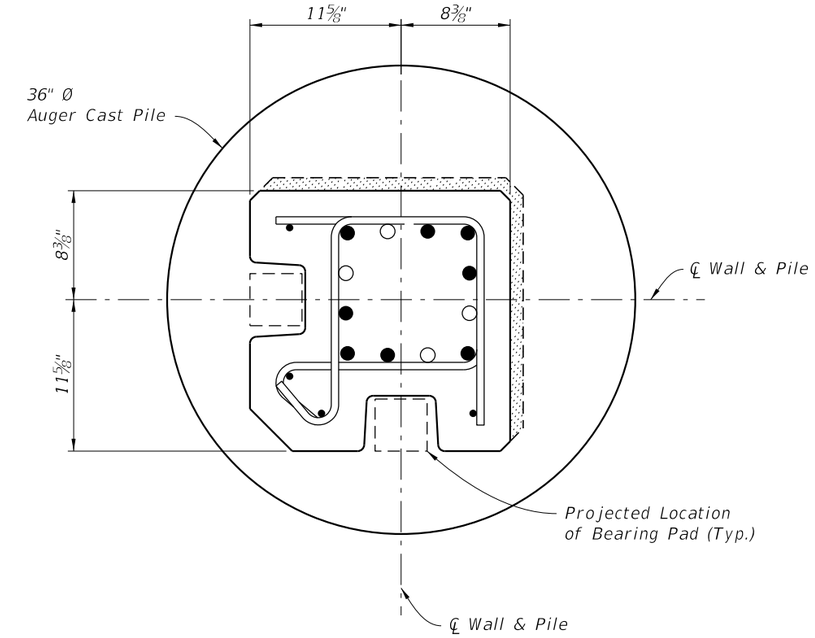

SECTION V-V

NOTES:

1. For Pile Length Tables, see Sheets 15 and 16.
2. Trowel Finish top of auger cast pile to allow placement of Bearing Pads.

* Extend Post 2" above top of high side wall panel when post caps are shown in plans. See Sheet 4, "ELEVATION STEP AT TOP OF WALL".

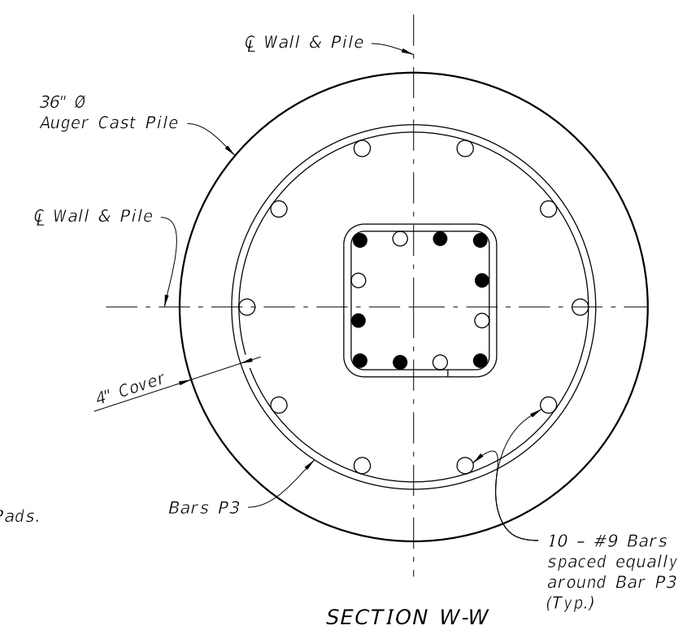

SECTION W-W

90° CORNER LOW CLEARANCE POST PLACEMENT & PILE REINFORCING STEEL DETAILS

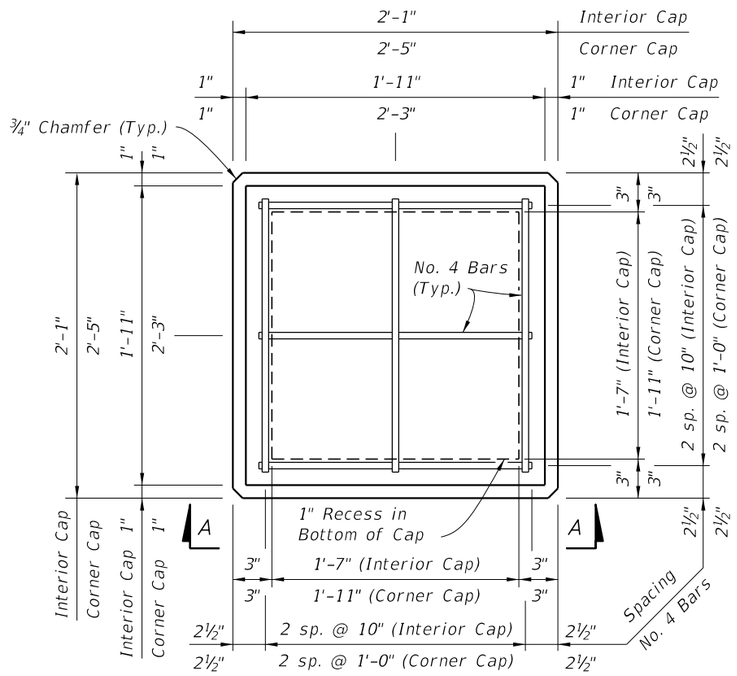

PLAN VIEW
(Type "A" Cap Shown, Type "B" & "C" Caps Similar)

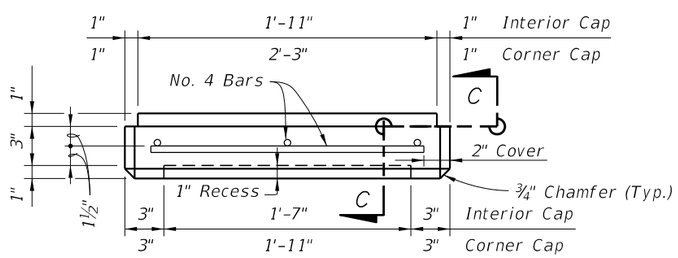

VIEW A-A SHOWN, VIEW B-B SIMILAR
(Type "A" Cap Shown, Type "B" & "C" Caps Similar)

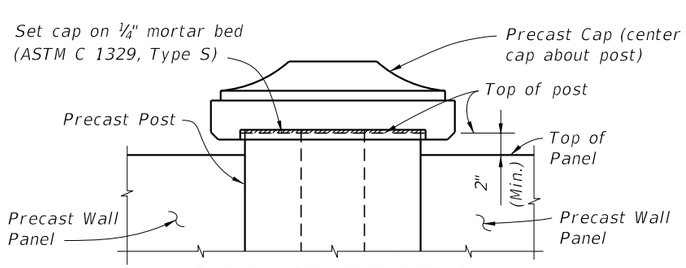

CAP PLACEMENT DETAIL
(Type "B" Cap Shown, Type "A" & "C" Caps Similar)

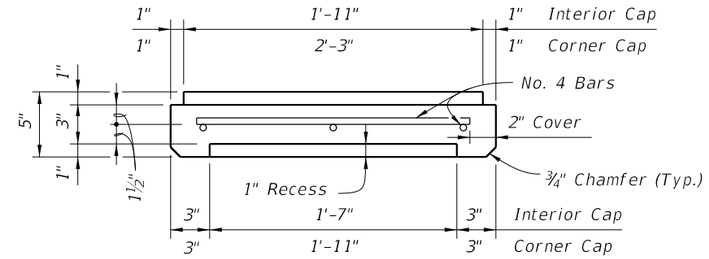

SECTION C-C

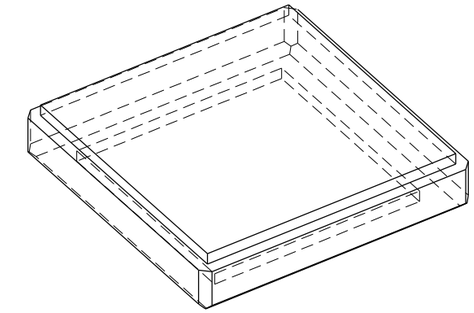

PICTORIAL VIEW

TYPE "A" CAP DETAILS

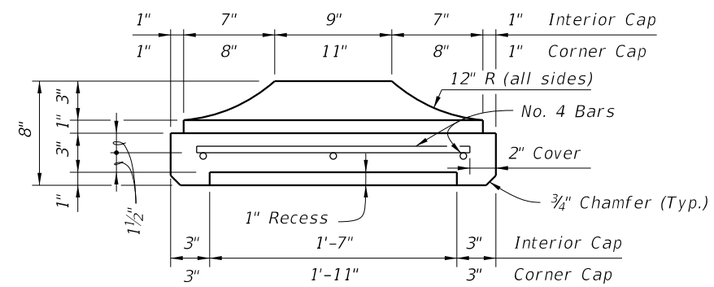

SECTION C-C

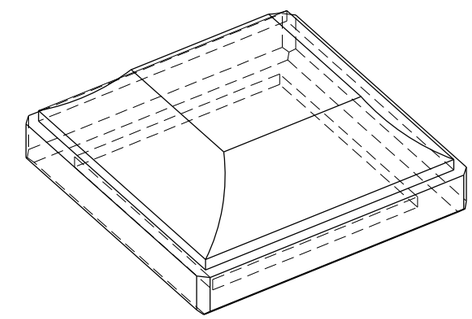

PICTORIAL VIEW

TYPE "B" CAP DETAILS

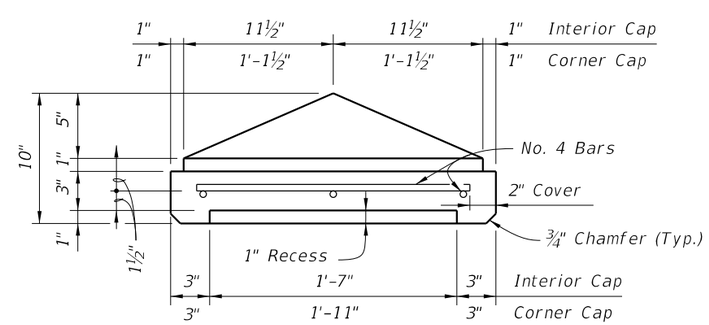

SECTION C-C

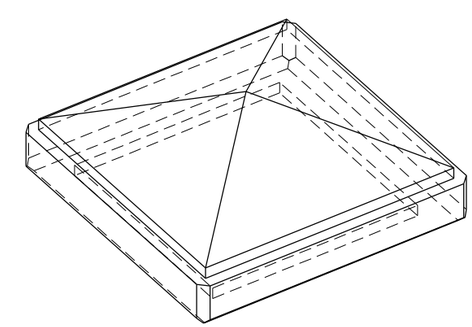

PICTORIAL VIEW

TYPE "C" CAP DETAILS

PRECAST POST CAPITAL

LAST REVISION	REVISION	DESCRIPTION:			INDEX NO.	SHEET NO.
07/01/14			FDOT FY 2017-18 DESIGN STANDARDS	PRECAST NOISE WALLS	5200	14 of 16

10/26/2016 8:34:17 AM

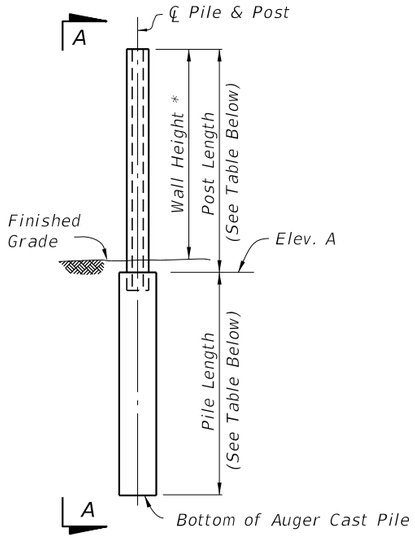

PILE/POST ELEVATION

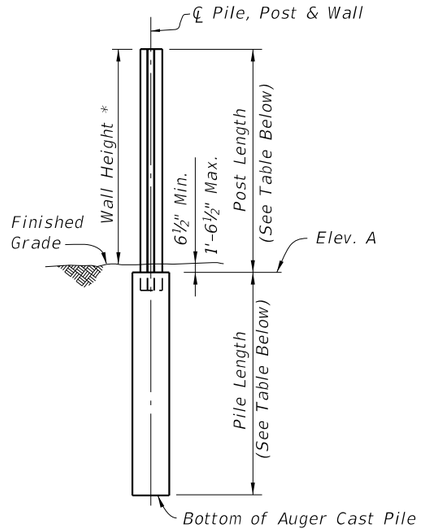

VIEW A-A

* See Sheet 1, Note 4.

BAR BENDING DETAILS

All bar dimensions in bending diagrams are out-to-out. All bars not shown in the bending diagrams are straight.

STANDARD POST (#4 Bars)

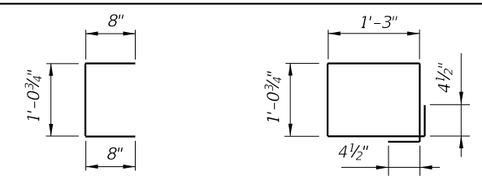

BAR P1
Bar Length = 2'-5"

BAR P2
Bar Length = 5'-5"

PILE (Low Clearance) (#4 Bars)

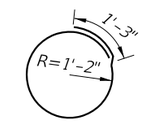

BAR P3
Bar Length = 8'-7"

45° CORNER POST (#4 Bars)

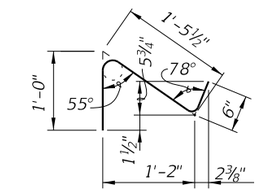

BAR P7
Bar Length = 3'-0"

90° CORNER POST (#4 Bars)

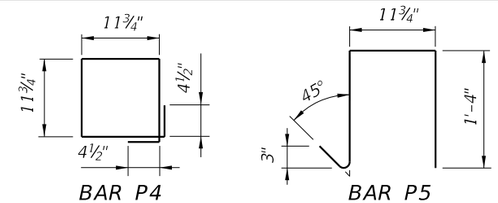

BAR P4
Bar Length = 4'-8"

BAR P5
Bar Length = 4'-0"

CAST-IN-PLACE COLLAR (#5 Bars)

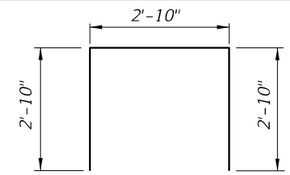

BAR P6 (Pair)
Bar Length = 8'-6" Each

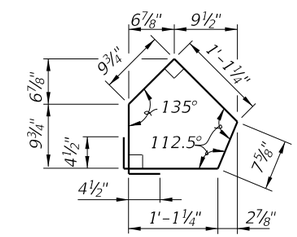

BAR P8
Bar Length = 5'-3"

TABLE 1A - TABLE OF POST REINFORCING STEEL

WALL HEIGHT (Feet)	POST LENGTHS		WIND SPEED = 130 MPH											
			10'-0" POST SPACING						20'-0" POST SPACING					
	WITHOUT CAP	WITH CAP	BARS A	BARS B		BARS D	BARS E		BARS A	BARS B		BARS D	BARS E	
			SIZE	SIZE	DIM 'A'	SIZE	SIZE	DIM 'A'	SIZE	SIZE	DIM 'A'	SIZE	SIZE	DIM 'A'
12	13'-0½"	13'-2½"	#3	#3	9'-2"	#4	#4	10'-11"	#5	#5	9'-8"	#5	#5	8'-8"
13	14'-0½"	14'-2½"	#4	#4	11'-11"	#4	#4	10'-11"	#5	#5	9'-8"	#6	#6	10'-4"
14	15'-0½"	15'-2½"	#4	#4	11'-11"	#4	#4	10'-11"	#5	#5	9'-8"	#6	#6	10'-4"
15	16'-0½"	16'-2½"	#4	#4	11'-11"	#5	#5	12'-8"	#6	#6	11'-4"	#7	#7	11'-8"
16	17'-0½"	17'-2½"	#4	#4	11'-11"	#5	#5	12'-8"	#6	#6	11'-4"	#7	#7	11'-8"
17	18'-0½"	18'-2½"	#5	#5	14'-8"	#5	#5	12'-8"	#7	#7	13'-9"	#7	#7	11'-8"
18	19'-0½"	19'-2½"	#5	#5	14'-8"	#6	#6	15'-4"	#7	#7	13'-9"	#8	#7	13'-8"
19	20'-0½"	20'-2½"	#5	#5	14'-8"	#6	#6	15'-4"	#7	#7	13'-9"	#8	#8	13'-0"
20	21'-0½"	21'-2½"	#5	#5	14'-8"	#6	#6	15'-4"	#7	#8	13'-0"	#8	#9	12'-2"
21	22'-0½"	22'-2½"	#6	#6	17'-4"	#7	#7	16'-8"	#8	#8	15'-0"	#9	#9	13'-2"
22	23'-0½"	23'-2½"	#6	#6	17'-4"	#7	#7	16'-8"	#8	#8	15'-0"	#9	#10	12'-4"

TABLE 1B - PILE LENGTHS (Feet) - WIND SPEED = 130 MPH

WALL HEIGHT (Feet)	10'-0" POST SPACING								20'-0" POST SPACING							
	H-POSTS				CORNER POSTS				H-POSTS				CORNER POSTS			
	SOIL 1		SOIL 2		SOIL 1		SOIL 2		SOIL 1		SOIL 2		SOIL 1		SOIL 2	
	30" ∅	36" ∅	30" ∅	36" ∅	30" ∅	36" ∅	30" ∅	36" ∅	30" ∅	36" ∅	30" ∅	36" ∅	30" ∅	36" ∅	30" ∅	36" ∅
12	12	11	10	10	11	10	10	9	15	14	14	13	15	14	13	12
13	12	11	11	10	12	11	10	10	16	15	14	13	15	14	14	13
14	13	12	11	10	12	11	11	10	17	15	15	14	16	15	14	13
15	13	12	11	11	13	12	11	10	17	16	15	14	17	15	15	14
16	13	12	12	11	13	12	12	11	18	17	16	15	17	16	15	14
17	14	13	12	11	14	13	12	11	19	17	16	15	18	17	16	15
18	14	13	13	12	14	13	12	12	19	18	17	16	19	17	16	15
19	15	14	13	12	14	13	13	12	20	18	17	16	19	18	17	16
20	15	14	14	13	15	14	13	12	20	19	18	17	20	18	17	16
21	16	15	14	13	15	14	14	13	21	19	18	17	20	19	18	17
22	16	15	14	13	16	15	14	13	21	20	19	17	21	19	18	17

TABLE NOTE:
1. Bars D and Bars E are for 45° Corner Posts only.
2. See Contract Plans for project wind speed.
3. Soil 1 = Loose Granular Soil, N = 4 to 9.
   Soil 2 = Medium Dense Granular Soil, N = 10 to 40.

PILE DEPTH & REINFORCING SUMMARY

TABLE 2A - TABLE OF POST REINFORCING STEEL

WALL HEIGHT (Feet)	POST LENGTHS		WIND SPEED = 150 MPH											
			10'-0" POST SPACING						20'-0" POST SPACING					
	WITHOUT CAP	WITH CAP	BARS A	BARS B		BARS D	BARS E		BARS A	BARS B		BARS D	BARS E	
			SIZE	SIZE	DIM 'A'	SIZE	SIZE	DIM 'A'	SIZE	SIZE	DIM 'A'	SIZE	SIZE	DIM 'A'
12	13'-0½"	13'-2½"	#4	#4	9'-11"	#4	#4	8'-11"	#5	#5	8'-8"	#6	#6	8'-4"
13	14'-0½"	14'-2½"	#4	#4	9'-11"	#5	#5	10'-8"	#6	#6	10'-4"	#7	#7	9'-8"
14	15'-0½"	15'-2½"	#4	#4	9'-11"	#5	#5	10'-8"	#6	#6	10'-4"	#7	#7	9'-8"
15	16'-0½"	16'-2½"	#5	#5	12'-8"	#5	#5	10'-8"	#7	#7	11'-8"	#7	#8	9'-0"
16	17'-0½"	17'-2½"	#5	#5	12'-8"	#6	#6	13'-4"	#7	#7	11'-8"	#8	#7	11'-8"
17	18'-0½"	18'-2½"	#5	#5	12'-8"	#6	#6	13'-4"	#7	#8	11'-0"	#8	#9	9'-3"
18	19'-0½"	19'-2½"	#6	#6	15'-4"	#6	#6	13'-4"	#8	#7	12'-8"	#9	#8	12'-0"
19	20'-0½"	20'-2½"	#6	#6	15'-4"	#7	#7	14'-8"	#8	#8	12'-0"	#9	#10	10'-4"
20	21'-0½"	21'-2½"	#6	#6	15'-4"	#7	#7	14'-8"	#8	#9	11'-2"	#10	#9	13'-3"
21	22'-0½"	22'-2½"	#7	#7	16'-9"	#7	#8	14'-0"	#9	#9	13'-2"	#11	#9	14'-3"
22	23'-0½"	23'-2½"	#7	#7	16'-9"	#8	#7	16'-0"	#9	#10	12'-4"	#10	#14	8'-4"

TABLE 2B - PILE LENGTHS (Feet) - WIND SPEED = 150 MPH

WALL HEIGHT (Feet)	10'-0" POST SPACING								20'-0" POST SPACING							
	H-POSTS				CORNER POSTS				H-POSTS				CORNER POSTS			
	SOIL 1		SOIL 2		SOIL 1		SOIL 2		SOIL 1		SOIL 2		SOIL 1		SOIL 2	
	30" ∅	36" ∅	30" ∅	36" ∅	30" ∅	36" ∅	30" ∅	36" ∅	30" ∅	36" ∅	30" ∅	36" ∅	30" ∅	36" ∅	30" ∅	36" ∅
12	13	12	12	11	13	12	11	11	18	16	16	14	17	16	15	14
13	14	13	12	11	13	12	12	11	18	17	16	15	18	17	16	15
14	14	13	12	12	14	13	12	12	19	18	17	16	19	17	16	15
15	15	14	13	12	14	13	13	12	20	18	17	16	19	18	17	16
16	15	14	13	13	15	14	13	12	21	19	18	17	20	18	18	16
17	16	15	14	13	15	14	13	13	21	20	19	17	21	19	18	17
18	16	15	14	13	16	15	14	13	22	20	19	18	21	20	19	17
19	17	16	15	14	16	15	14	13	22	21	20	18	22	20	19	18
20	17	16	15	14	17	16	15	14	23	21	20	19	23	21	20	19
21	18	17	16	15	17	16	15	14	24	22	21	19	23	22	21	19
22	18	17	16	15	18	17	16	15	24	23	21	20	24	22	21	20

TABLE 3A - TABLE OF POST REINFORCING STEEL

WALL HEIGHT (Feet)	POST LENGTHS		WIND SPEED = 170 MPH											
			10'-0" POST SPACING						20'-0" POST SPACING					
	WITHOUT CAP	WITH CAP	BARS A	BARS B		BARS D	BARS E		BARS A	BARS B		BARS D	BARS E	
			SIZE	SIZE	DIM 'A'	SIZE	SIZE	DIM 'A'	SIZE	SIZE	DIM 'A'	SIZE	SIZE	DIM 'A'
12	13'-0½"	13'-2½"	#4	#4	8'-11"	#5	#5	9'-8"	#6	#6	8'-4"	#7	#7	7'-8"
13	14'-0½"	14'-2½"	#5	#5	10'-8"	#5	#5	9'-8"	#7	#7	9'-8"	#7	#8	7'-0"
14	15'-0½"	15'-2½"	#5	#5	10'-8"	#6	#6	11'-4"	#7	#7	9'-8"	#8	#7	9'-8"
15	16'-0½"	16'-2½"	#5	#5	10'-8"	#6	#6	11'-4"	#7	#8	9'-0"	#8	#9	9'-0"
16	17'-0½"	17'-2½"	#6	#6	13'-4"	#7	#7	12'-8"	#8	#8	11'-0"	#9	#9	9'-3"
17	18'-0½"	18'-2½"	#6	#6	13'-4"	#7	#7	12'-8"	#8	#9	10'-3"	#10	#8	12'-0"
18	19'-0½"	19'-2½"	#6	#6	13'-4"	#7	#7	12'-8"	#9	#9	11'-3"	#10	#10	10'-4"
19	20'-0½"	20'-2½"	#7	#7	14'-8"	#7	#8	12'-0"	#9	#10	10'-4"	#11	#10	11'-4"
20	21'-0½"	21'-2½"	#7	#7	14'-8"	#8	#7	14'-8"	#10	#9	13'-3"	#10	#14	6'-0"
21	22'-0½"	22'-2½"	#7	#7	14'-8"	#8	#9	13'-3"	#10	#11	11'-5"	#14	#11	13'-5"
22	23'-0½"	23'-2½"	#7	#8	14'-0"	#9	#8	14'-0"	#11	#11	12'-5"	#14	#14	10'-0"

TABLE 3B - PILE LENGTHS (Feet) - WIND SPEED = 170 MPH

WALL HEIGHT (Feet)	10'-0" POST SPACING								20'-0" POST SPACING							
	H-POSTS				CORNER POSTS				H-POSTS				CORNER POSTS			
	SOIL 1		SOIL 2		SOIL 1		SOIL 2		SOIL 1		SOIL 2		SOIL 1		SOIL 2	
	30" ∅	36" ∅	30" ∅	36" ∅	30" ∅	36" ∅	30" ∅	36" ∅	30" ∅	36" ∅	30" ∅	36" ∅	30" ∅	36" ∅	30" ∅	36" ∅
12	15	14	13	12	14	13	13	12	20	19	18	16	19	18	17	16
13	16	14	14	13	15	14	13	12	21	19	18	17	20	19	18	16
14	16	15	14	13	16	14	14	13	22	20	19	18	21	19	18	17
15	17	15	15	14	16	15	14	13	22	21	20	18	22	20	19	18
16	17	16	15	14	17	16	15	14	23	21	20	19	22	21	20	18
17	18	17	16	15	17	16	15	14	24	22	21	19	23	22	20	19
18	19	17	16	15	18	17	16	15	25	23	22	20	24	22	21	20
19	19	18	17	16	18	17	16	15	25	23	22	21	25	23	22	20
20	20	18	17	16	19	18	17	16	25	23	22	21	25	23	22	20
21	20	19	18	17	20	18	17	16	25	23	22	21	25	23	22	20
22	21	19	18	17	20	19	18	17	25	23	22	21	25	23	22	20

TABLE NOTE:
1. Bars D and Bars E are for 45° Corner Posts only.
2. See Contract Plans for project wind speed.
3. Soil 1 = Loose Granular Soil, N = 4 to 9;
   Soil 2 = Medium Dense Granular Soil, N = 10 to 40.

PILE DEPTH & REINFORCING SUMMARY