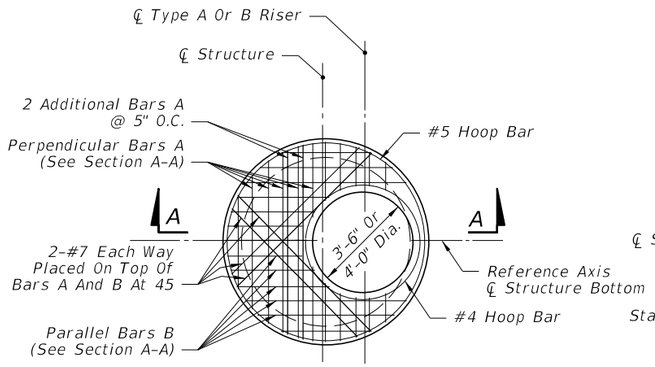

NOTE:
Not Applicable For Type A, B, C, D & E Ditch Bottom Inlets Or Type S & V Gutter Inlets.
See Index Nos. 220, 221, 230, 231 & 232.

TOP SLAB REINFORCING STEEL DIAGRAM
(ALTERNATE A)

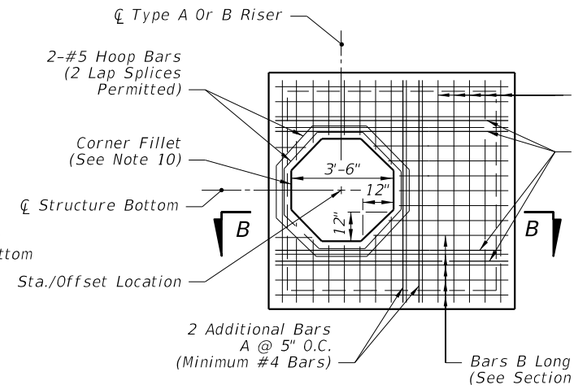

SQUARE OPENING WITH CORNER FILLETS
TOP SLAB REINFORCING STEEL DIAGRAM
(ALTERNATE B)

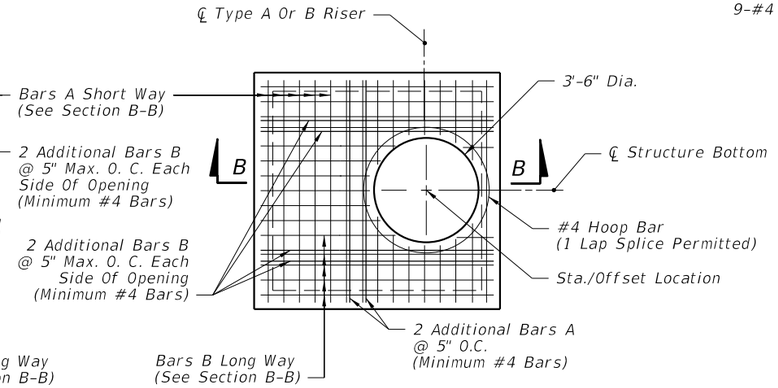

ROUND RISER OPENING

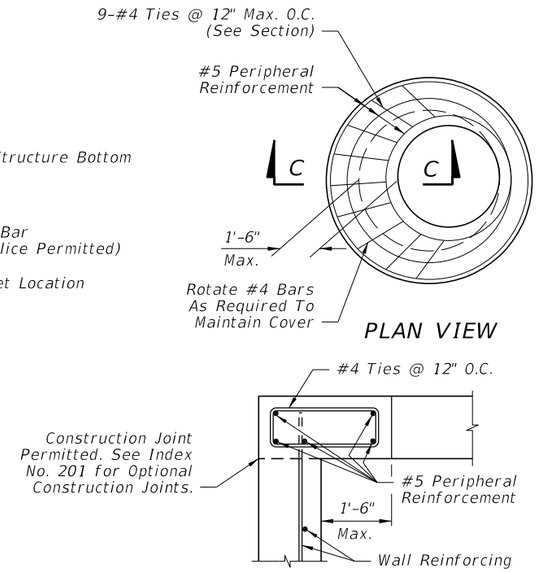

SECTION C-C
SPECIAL TOP SLAB*

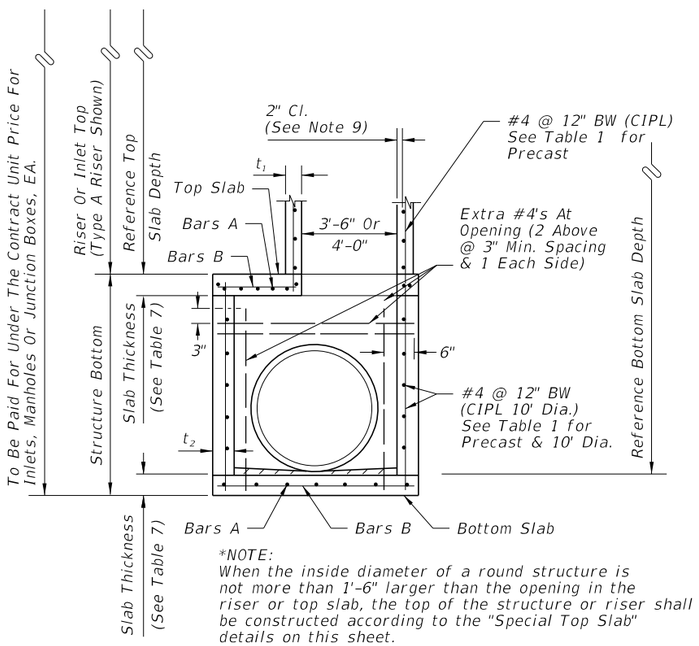

*NOTE:
When the inside diameter of a round structure is not more than 1'-6" larger than the opening in the riser or top slab, the top of the structure or riser shall be constructed according to the "Special Top Slab" details on this sheet.

SECTION A-A
(ALTERNATE A)

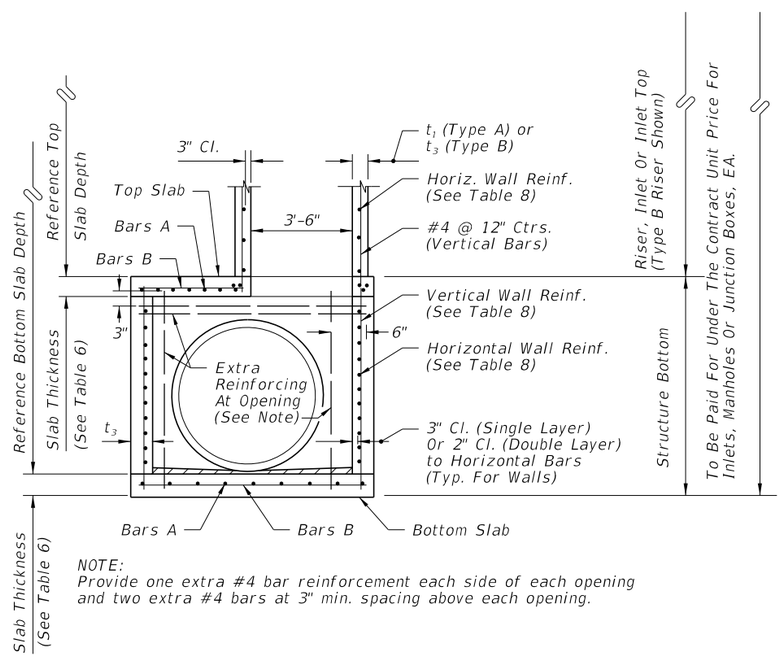

NOTE:
Provide one extra #4 bar reinforcement each side of each opening and two extra #4 bars at 3" min. spacing above each opening.

SECTION B-B
(ALTERNATE B)

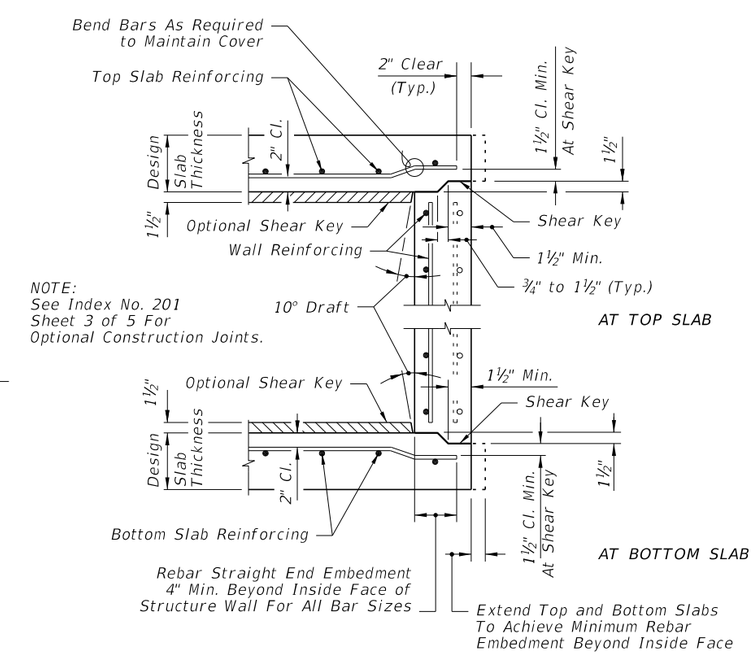

NOTE:
See Index No. 201 Sheet 3 of 5 For Optional Construction Joints.

TYPICAL SLAB TO WALL DETAILS
FOR PRECAST STRUCTURES

10/11/2016 10:14:51 AM

LAST REVISION	REVISION	DESCRIPTION:	FY 2017-18 DESIGN STANDARDS	STRUCTURE BOTTOMS TYPE J AND P	INDEX NO.	SHEET NO.
11/01/16					200	1 of 5

ROUND STRUCTURE BOTTOMS (ALTERNATE A) & ROUND RISERS– TABLE 1

Wall Thickness (t_1 & t_2) and Vertical & Horizontal Areas of Reinforcement (A_s)

Type	Structure/Riser Diameter (ft)	Cast-In-Place Items Class II Concrete			Precast Items				
					Class II Concrete			ASTM C478	
		t_1 Riser (in.)	t_2 Bottom (in.)	A_s (in.²/ft.)	t_1 Riser (in.)	t_2 Bottom (in.)	A_s (in.²/ft.)	t_1 or t_2 (in.)	A_2 *** (in.²/ft.)
P	3'-6"	6	8	0.20	6	8	0.20	4**	0.105
P	4'-0"	6	8	0.20	6	8	0.20	5**	0.120
J	5'-0"	–	8	0.20	–	8	0.20	6**	0.150
J	6'-0"	–	8	0.20	–	8	0.20	6	0.180
J	7'-0"	–	8	0.20	–	8	0.20	7	0.210
J	8'-0"	–	8	0.20	–	8	0.20	8	0.240
J	10'-0"	–	10	0.40##	–	10	0.40##	10	0.300
J	12'-0"	–	10	0.40##	–	12	0.40##	12	0.360

TABLE 1 NOTES:

##Provide 0.20 eq. in.²/ft. at each face, 12" max. bar spacing.

**Modified minimum wall thickness.

***Min. total circumferential reinforcement for continuous steel hoops:

A_2 = 0.40 sq. in. for riser section height equal or less than 2'-0" (2 hoop min.)

A_2 = 0.60 sq. in. for riser section height more than 2'-0" up to 4'-0" (3 hoop min.)

Areas of reinforcing for precast items are based on Grade 60 reinforcing;

No reduction in the area of reinforcement is allowed for welded wire fabric in Table 1;

Area of vertical reinforcing may be reduced in accordance with ASTM C478.

SQUARE & RECTANGULAR STRUCTURES (ALTERNATE B) – TABLE 2

Type	Wall Length (ft)	Max. Depth (ft)	Wall Thickness (t_3)	
			CIP (in.)	Precast (in.)
P	≤ 3'-6"	40	6 Riser 8 Bottom	6
J	4'-0"	40	8	6
J	5'-0"	22	–	6
J	6'-0"	15	–	6
J	5'-0" to 9'-0"	40	8	8
J	10'-0"	26	8	8
J	10'-0" to 12'-0"	40	10	9
J	16'-0"	35	–	9
J	16'-0"	40	10	10
J	20'-0"	25	–	9
J	20'-0"	30	10	10

TABLE 2 NOTES:

See Table 8 for Reinforcing Schedule.

GENERAL NOTES

1. Standard structure bottoms 4'-0" diameter and smaller (Alt. A) and 3'-6" square (Alt. B) are designated Type P. Larger standard structure bottoms are designated Type J. Risers are permitted for all structures. Round risers are designated Type A, square risers are designated Type B.
2. Walls of circular structures (Alt. A) constructed in place may be of brick or reinforced concrete. Precast and rectangular structures (Alt. B) shall be constructed of reinforced concrete only.
3. Wall thickness and reinforcement are for either reinforced cast-in-place or precast concrete units except that precast circular units may be furnished with walls in accordance with ASTM C478 (see modified wall thicknesses in Table 1).
4. Top and bottom slab thickness and reinforcement are for precast and cast-in-place construction. All concrete shall be of Class II concrete, except use Class IV concrete when shown in the Plans, for special applications of structures located in extremely aggressive environments. Concrete as specified in ASTM C478 (4000 psi) may be used in lieu of Class II concrete for precast items manufactured in accordance with Specifications Section 449.
5. All reinforcement shown is Grade 60 steel, deformed bar. Equivalent area Grade 40 steel or equivalent area smooth or deformed welded wire reinforcement in accordance with Specification Section 931 may be substituted according to Index No. 201, unless otherwise noted.
6. Alt. A or Alt. B structure bottoms may be used in conjunction with curb inlet tops Types 1, 2, 3, 4, 5, 6, 9, and 10, and any manhole or junction box unless otherwise shown in the plans or other standard drawings. Alt. B structure bottoms may be used in conjunction with curb inlet Types 7 & 8, or any ditch bottom inlet unless otherwise shown in the plans or other standard drawings.
7. Rectangular structures may be rotated as directed by the Engineer in order to facilitate connections between the structure walls and storm sewer pipes.
8. Except when ACI hooks are specifically required, reinforcement in top and bottom slab shall be straight embedment.
9. All reinforcement must have 2" minimum cover except for 3'-6" diameter precast circular units manufactured under ASTM C478, keyed construction otherwise shown. Additional bars used to restrain hole formers for precast structures with grouted pipe connections,may be left flush with the hole surface. Cut or bend reinforcement at pipe openings to maintain cover. Exposed ends of reinforcing at precast pipe openings and grouted joints must be removed to 1" below the concrete surface and sealed with a Type F epoxy in accordance with Specification Section 926. Horizontal steel in rectangular structures shall be lapped a minimum of 30 bar diameters or by standard hooks at corners.
10. The corner fillets shown are necessary for rectangular structures used with circular risers and inlet throats and when used on skew with rectangular risers, inlets and inlet throats. Fillets will be required in the top slab of the Alt. A structure bottoms when used with the Alt. B risers. Each fillet shall be reinforced with two #5 bars.
11. Inlet walls, throats, risers or manhole tops shall be secured to structures as shown on Index No. 201 (Sheet 3 of 5) Optional Construction Joints.
12. Structures with depths over 14' below the mean high water table are to be checked for flotation by the designer of the drainage project.
13. Units larger than specified standards may be substituted at the contractor's option when these units will not cause or increase the severity of utility conflicts. Such larger units shall be furnished at no additional cost to the Department. Larger Alt. A units cannot replace Alt. B units without approval of the Engineer. This note applies to this Index only.
14. For manhole and junction box tops, for frames and covers, and, for supplementary details and notes see Index No. 201.
15. Type J structure bottoms must have a minimum 6'-0" wall height when possible, for maintenance access.

TABLE 3-MINIMUM STRUCTURE SIZES FOR SINGLE PIPE CONNECTION PER SIDE				
PIPE SIZE	RECTANGULAR		ROUND	
	Side Dimension (L)		Diameter (D)	
	Single Pipe Per Side	Note Number	Single Pipe or θ=180°	2 to 4 Pipes θ=90°
18"	3'-6"		3'-6"	4'-0"
24"	3'-6"		3'-6"	5'-0"
30"	3'-6"/4'-0"	2	4'-0"	6'-0"
36"	4'-0"/5'-0"	3	5'-0"	7'-0"
42"	5'-0"		6'-0"	7'-0"
48"	6'-0"		6'-0"	8'-0"
54"	6'-0"		7'-0"	10'-0"
60"	7'-0"		7'-0"	10'-0"
66"	7'-0"/8'-0"	4	8'-0"	12'-0"
72"	8'-0"		8'-0"	12'-0"
78"	9'-0"		10'-0"	12'-0"
84"	9'-0"		12'-0"	N/A

TABLE 3 NOTES:

1. For Round Structures sizes with variable angles between pipes and variable pipe sizes, refer to the FDOT Storm Drain Handbook.
2. For 3'-6" Precast Square Structure Bottoms, 30" Pipes with similar invert elevations are not permitted in adjacent walls. Use 4'-0" Side Dimensions when 30" pipe openings are required on adjacent walls and the difference in flow lines is less than 3'-0".
3. For 4'-0" Precast Square Structure Bottoms, 36" Pipes with similar invert elevations are not permitted in adjacent walls. Use 5'-0" Side Dimensions when 36" pipe openings are required on adjacent walls and the difference in flow lines is less than 3'-0".
4. For 7'-0" Precast Square Structure Bottoms, 66" Pipes with similar invert elevations are not permitted in adjacent walls. Use 8'-0" Side Dimensions when 66" pipe openings are required on adjacent walls and the difference in flow lines is less than 4'-0".

TABLE 4-MINIMUM SIZES FOR MULTIPLE PARALLEL PIPE CONNECTIONS FOR RECTANGULAR STRUCTURE BOTTOMS				
PIPE SIZE	PIPE SPACING (S)	MINIMUM WALL LENGTH (L) FOR NUMBER OF PARALLEL PIPES		
		2	3	4
18"	2'-10"	6'-0"	8'-6"	11'-0"
24"	3'-5"	6'-6"	10'-0"	13'-6"
30"	4'-3"	8'-0"	12'-6"	16'-6"
36"	5'-1'	9'-6"	14'-6"	19'-6"
42"	6'-0"	11'-0"	17'-0"	-
48"	6'-9"	12'-6"	19'-0"	-
54"	7'-8"	14'-0"	-	-
60"	8'-6"	15'-0"	-	-
66"	9'-0"	16'-6"	-	-
72"	10'-0"	18'-0"	-	-
78"	10'-9"	19'-0"	-	-
84"	11'-8"	20'-6"	-	-

TABLE 4 NOTES:

1. Minimum wall lengths based on precast structures, using concrete pipe with maximum skew angles per Table 5.
2. Wall lengths exceeding 20'-0" require special designs.

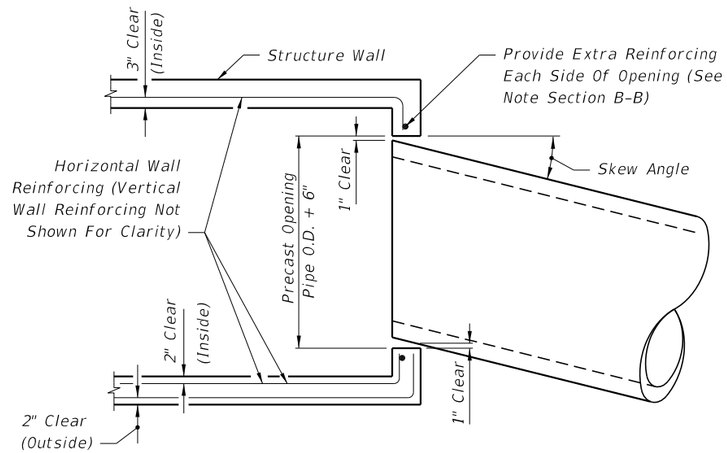

MAXIMUM PIPE SKEW FOR PRECAST ROUND OPENINGS
PLAN VIEW

TABLE 5 - MAXIMUM PIPE SKEW FOR PRECAST ROUND OPENINGS													
	WALL THICKNESS	PIPE SIZE											
		18"	24"	30"	36"	42"	48"	54"	60"	66"	72"	78"	84"
MAXIMUM SKEW ANGLE	8"	19°	17°	16°	16°	15°	14°	14°	13°	13°	13°	12°	12°
	6"	21°	20°	18°	17°	17°	16°	15°	15°	14°	14°	13°	13°

TABLE 5 NOTES:
These values are based on 2" clearance for precast structures. Larger skews are possible for Cast-In-Place Structures or elliptical pipe openings when approved by the Engineer.

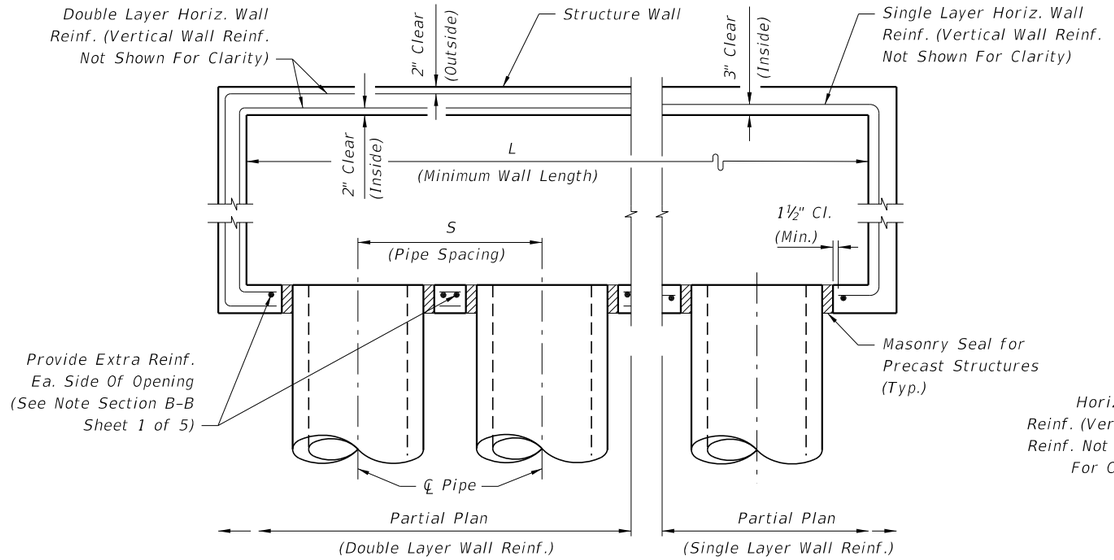

MULTIPLE PARALLEL PIPE CONNECTIONS DETAIL
PLAN VIEW

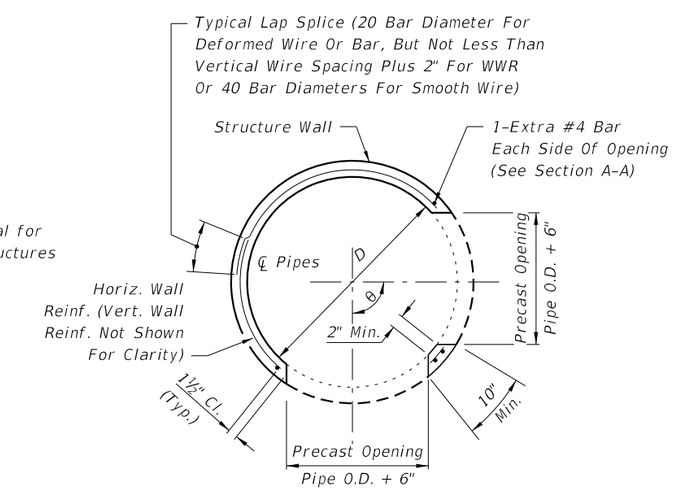

PRECAST ROUND STRUCTURES WITH
MULTIPLE PIPE CONNECTIONS

STRUCTURE SIZES FOR PIPE CONNECTIONS

10/11/2016 10:14:56 AM

SLAB DESIGNS - SQUARE AND RECTANGULAR STRUCTURES (TABLE 6)
(ALL SLABS 8" THICK EXCEPT AS NOTED - REINFORCING PARALLEL TO SHORT WAY AND LONG WAY)

SHORT-WAY		LONG-WAY	
SLAB DEPTH	SCHEDULE (Bars A)	SLAB DEPTH	SCHEDULE (Bars B)
SIZE: 3'-6" x UNLIMITED			
≥0.5' < 8'	B10	≥0.5' < 24'	B10
8' < 13'	B5.5	24'-40'	B5.5
13' < 31'	C6.5		
31'-40'	D7		
SIZE: 4' x UNLIMITED			
≥0.5' < 7'	B5.5	≥0.5' < 15'	B10
7' < 19'	C6.5	15' < 29'	B5.5
19' < 31'	D7	29'-40'	C6.5
31'-40'	E5		
SIZE: 5' x 5'			
≥0.5' < 3'	C6.5	≥0.5' < 3'	C6.5
3' < 7'	B5.5	3' < 13'	C6.5
7' < 22'	C6.5	13' < 22'	D7
22' < 29'	D7	22' < 29'	D4.5
29'-40'	E5	29'-40'	E5
SIZE: 5' x 6'			
≥0.5' < 12'	C6.5	≥0.5' < 3'	C6.5
12' < 26'	D7	3' < 9'	B5.5
26'-40'	E5	9' < 23'	C3.5
		23' < 35'	D4.5
		35'-40'	E5
SIZE: 5' x 7'			
≥0.5' < 10'	C6.5	≥0.5' < 10'	B5.5
10' < 20'	D7	10' < 31'	C3.5
20' < 34'	E5	31'-40'	D4.5
34'-40'	F5		
SIZE: 5' x 8'			
≥0.5' < 7'	C6.5	≥0.5' < 8'	B10
7' < 13'	D7	8' < 17'	B5.5
13' < 24'	E5	17' < 25'	C6.5
24'-40'	F5	25'-40'	C3.5
SIZE: 5' x 9'			
≥0.5' < 8'	C6.5	≥0.5' < 14'	B10
8' < 14'	D7	14' < 24'	B5.5
14' < 25'	E5	24' < 34'	C6.5
25'-40'	F5	34'-40'	C3.5
SIZE: 5' x UNLIMITED			
≥0.5' < 8'	C6.5	≥0.5' < 14'	B10
8' < 14'	D7	14' < 24'	B5.5
14' < 25'	E5	24' < 34'	C6.5
25'-40'	F5	34'-40'	C3.5

SHORT-WAY		LONG-WAY	
SLAB DEPTH	SCHEDULE (Bars A)	SLAB DEPTH	SCHEDULE (Bars B)
SIZE: 6' x 6'			
≥0.5' < 13'	C6.5	≥0.5' < 10'	C3.5
13' < 23'	D7	10' < 18'	D4.5
23'-40'	E5	18' < 27'	E5
		27' < 33'	E3
		33'-40'	F5
SIZE: 6' x 7'			
≥0.5' < 8'	C6.5	≥0.5' < 8'	C6.5
8' < 16'	D7	8' < 12'	C3.5
16' < 28'	E5	12' < 21'	D4.5
28'-40'	F5	21' < 28'	E5
		28' < 35'	E3
		35'-40'	F5
SIZE: 6' x 8'			
≥0.5' < 6'	C6.5	≥0.5' < 6'	B5.5
6' < 13'	D7	6' < 11'	C6.5
13' < 22'	E5	11' < 17'	C3.5
22' < 35'	F5	17' < 22'	D4.5
35'-40'	G5	22' < 32'	E5
		32'-40'	E3
SIZE: 6' x 9'			
≥0.5' < 8'	D7	≥0.5' < 8'	B5.5
8' < 14'	E5	8' < 14'	C6.5
14' < 24'	F5	14' < 21'	C3.5
24'-34'	G5	21' < 25'	D4.5
		25'-34'	E5
SIZE: 6' x UNLIMITED			
≥0.5' < 8'	D7	≥0.5' < 8'	B5.5
8' < 14'	E5	8' < 14'	C6.5
14' < 24'	F5	14' < 21'	C3.5
24'-34'	G5	21' < 25'	D4.5
		25'-34'	E5
SIZE: 7' x 7'			
≥0.5' < 8'	C6.5	≥0.5' < 4'	C6.5
8' < 15'	D7	4' < 7'	C3.5
15' < 26'	E5	7' < 11'	D4.5
26'-40'	F5	11' < 22'	E3
		22' < 32'	F3.5
		32'-40'	G3.5
SIZE: 7' x 8'			
≥0.5' < 5'	C6.5	≥0.5' < 5'	C6.5
5' < 11'	D7	5' < 8'	C3.5
11' < 19'	E5	8' < 13'	D4.5
19' < 30'	F5	13' < 22'	E3
30'-40'	G5	22' < 30'	F3.5
		30'-40'	G3.5
SIZE: 7' x 9'			
≥0.5' < 9'	D7	≥0.5' < 7'	C6.5
9' < 15'	E5	7' < 10'	C3.5
15' < 25'	F5	10' < 14'	D4.5
25' - 34'	G5	14' < 21'	E5
		21' < 29'	F5
		29'-34'	F3.5

SHORT-WAY		LONG-WAY	
SLAB DEPTH	SCHEDULE (Bars A)	SLAB DEPTH	SCHEDULE (Bars B)
SIZE: 8' x 8'			
≥0.5' < 10'	D7	≥0.5' < 9'	D4.5
10' < 19'	E5	9' < 13'	E5
19'-30'	F5	13' < 18'	F5
		18' < 23'	F3.5
		23'-30'	G3.5
SIZE: 8' x 9'			
≥0.5' < 8'	D7	≥0.5' < 7'	D7
8' < 14'	E5	7' < 9'	D4.5
14' < 23'	F5	9' < 15'	E3
23'-31'	G3.5	15' < 20'	F5
		20' < 23'	F3.5
		23'-31'	G3.5
SIZE: 9' x 9'			
≥0.5' < 8'	D7	≥0.5' < 7'	D4
8' < 14'	E5	7' < 10'	E5
14' < 22'	F5	10' < 17'	F3.5
		17' < 22'	G3.5
SIZE: 9'x9'x10" SLAB THICKNESS			
22' < 36'	F5	22' < 31'	F3.5
36'-40'	G5	31'-40'	G3.5
SIZE: 10'x10'x10" SLAB THICKNESS			
≥0.5' < 7'	C6.5	0.5' < 6'	C6.5
7' < 10'	D7	6' < 9'	D4.5
10' < 18'	E5	9' < 15'	E5
18' < 27'	F5	15' < 22'	F5
27'-32'	G5	22'-32'	G3.5
SIZE: 12'x12'x12" SLAB THICKNESS			
≥0.5' < 10'	D7	≥0.5' < 8'	D7
10' < 16'	E5	8' < 14'	E5
16' < 25'	F5	14' < 22'	F5
25'-35'	G5	22' < 30'	G5
		30'-35'	H4

SLAB DESIGNS - ROUND STRUCTURES (TABLE 7)

SLAB DEPTH	SLAB THICKNESS	REINF. (2-WAY) SCHEDULE
SIZE: 3'-6" DIAMETER		
2'-15'	6" Precast	C6.5
0.5' < 30'	8"	A6
30'-40'	8"	B5.5
SIZE: 4'-0" DIAMETER		
≥0.5' < 19'	8"	A6
19' < 30'	8"	B5.5
30'-40'	8"	C6.5
SIZE: 5'-0" DIAMETER		
≥0.5' < 15'	8"	B5.5
15' < 26'	8"	C6.5
26' < 35'	8"	D7
35'-40'	8"	D4.5
SIZE: 6'-0" DIAMETER		
≥0.5' < 9'	8"	B5.5
9' < 15'	8"	C6.5
15' < 22'	8"	C3.5
22' < 30'	8"	D4.5
30'-40'	8"	E5
SIZE: 7'-0" DIAMETER		
≥0.5' < 8'	8"	C3.5
8' < 16'	8"	D4.5
16' < 23'	8"	E5
23' < 27'	8"	E3
27'-40'	8"	F3.5
SIZE: 8'-0" DIAMETER		
≥0.5' < 10'	8"	D4.5
10' < 16'	8"	E5
16' < 19'	8"	E3
19' < 29'	8"	F3.5
29'-40'	10"	F5
SIZE: 10'-0" DIAMETER		
≥0.5' < 12'	10"	D4.5
12' < 20'	10"	E5
20' < 28'	10"	F5
28'-40'	10"	G3.5
SIZE: 12'-0" DIAMETER		
≥0.5' < 8'	10"	D4.5
8' < 13'	10"	E5
13' < 18'	10"	F5
18' < 26'	10"	G3.5
26'-40'	12"	G3.5

SLAB AND WALL DESIGN TABLE NOTES

1. Size is the inside dimension(s) of a structure.
2. Slab reinforcement is appropriate for top, intermediate, and bottom slabs.
3. Bottom Slabs for precast 3'-6" x 3'-6" rectangular structures at 15' depth or less, may be 6" thick.
4. Slab depth is measured from finished grade to top of slab.
5. Wall depth is measured to the top of the bottom slab for boxes and to the top of the intermediate slab for risers.
6. Wall height is the distance between top of lower slab to bottom of upper slab. Maximum wall height is 12' for wall lengths exceeding 5', or 10' for wall lengths exceeding 12'.
7. Wall lengths exceeding 6'-0" require two layers of reinforcing (See Table 8) with 2" of cover from the horizontal bars to the inside and outside faces for each layer.
8. Wall lengths exceeding the dimensions or depths shown in Table 8, or 12'-0" diameter require a special design.
9. Wall thickness and reinforcing for rectangular structures is based on the longer wall length.
10. Reinforcing schedules with larger areas of steel may be substituted for schedules with smaller bar or wire spacing, except that Schedule B10 may not be substituted for Schedule A6. See Index 201, Sheet 4 for allowable bar spacing adjustments when larger areas of reinforcing are substituted.

WALL DESIGNS - RECTANGULAR STRUCTURES (TABLE 8)

VERTICAL REINFORCING			HORIZONTAL REINFORCING			WALL THICKNESS
WALL DEPTH	SCHEDULE		WALL DEPTH	SCHEDULE		
SIZE: 3'-6' & RISERS						
≥1.17' - 40'	A12		≥1.17' < 10'	B10		6"/8"
			10' < 18'	B5.5		6"/8"
			18' < 29'	C6.5		6"/8"
			29' - 40'	C3.5		6"/8"
SIZE: 4'-0"						
≥1.17' - 40'	A12		≥1.17' < 6'	B10		6"/8"
			6' < 10'	B5.5		6"/8"
			10' < 20'	C6.5		6"/8"
			20' < 28'	C3.5		6"/8"
			28' - 40'	D4.5		6"/8"
SIZE: 5'-0"						
≥1.17' - 40'	A12		≥1.17' < 5'	B5.5		6"/8"
			5' < 9'	C6.5		6"/8"
			9' < 15'	C3.5		6"/8"
			15' < 22'	D4.5		6"/8"
			22' - 40'	E3		8"
SIZE: 6'-0"						
≥1.17' < 26'	A12		≥1.17' < 9'	C3.5		6"/8"
			9' < 15'	D4.5		6"/8"
			15' < 26'	E3		8"
	Inside	Outside		Inside	Outside	
26' - 40'	A12	A12	26' - 40'	D7	D7	8"
SIZE: 7'-0"						
	Inside	Outside		Inside	Outside	
≥1.17' < 25'	A12	A12	≥1.17' < 7'	B10	B10	8"
26' - 40'	B10	B10	7' < 10'	B5.5	B5.5	8"
			10' < 20'	C6.5	C6.5	8"
			20' < 30'	D7	D7	8"
			30' - 40'	E5	E5	8"
SIZE: 8'-0"						
	Inside	Outside		Inside	Outside	
≥1.17' < 20'	A12	A12	≥1.17' < 6'	B5.5	B5.5	8"
20' - 40'	C6.5	C6.5	6' < 13'	C6.5	C6.5	8"
			13' < 22'	D7	D7	8"
			22' < 31'	E5	E5	8"
			31' - 40'	F5	F5	8"
SIZE: 9'-0"						
	Inside	Outside		Inside	Outside	
≥1.17' < 12'	A12	A12	≥1.17' < 8'	C6.5	C6.5	8"
12' < 28'	C6.5	C6.5	8' < 15'	D7	D7	8"
28' - 40'	D7	D7	15' < 23'	E5	E5	8"
			23' - 40'	F5	F5	8"
SIZE: 10'-0"						
	Inside	Outside		Inside	Outside	
≥1.17' < 10'	B10	B10	≥1.17' < 10'	D7	D7	8"
10' < 21'	C6.5	C6.5	10' < 17'	E5	E5	8"
21' < 26'	D7	D7	17' < 26'	F5	F5	8"
26' - 40'	C6.5	C6.5	26' - 40'	F5	F5	10"

VERTICAL REINFORCING			HORIZONTAL REINFORCING			WALL THICKNESS
WALL DEPTH	SCHEDULE		WALL DEPTH	SCHEDULE		
SIZE: 10'-0" (Precast Only)						
	Inside	Outside		Inside	Outside	
26' - 40'	D7	D7	26' - 40'	F5	F5	9"
SIZE: 12'-0"						
	Inside	Outside		Inside	Outside	
≥1.17' < 14'	B10	B10	≥1.17' < 10'	C6.5	C6.5	10"
14' < 25'	C6.5	C6.5	10' < 17'	D7	D7	10"
25' - 40'	D7	D7	17' < 24'	E5	E5	10"
			24' - 40'	F5	F5	10"
SIZE: 12'-0" (Precast Only)						
	Inside	Outside		Inside	Outside	
≥1.17' < 12'	B10	B10	≥1.17' < 10'	D7	D7	9"
12' < 24'	C6.5	C6.5	10' < 17'	D4.5	D4.5	9"
24' - 40'	D7	D7	17' < 23'	E5	E5	9"
			23' < 32'	F5	F5	9"
			32' - 40'	G5	G5	9"
SIZE: 16'-0"						
	Inside	Outside		Inside	Outside	
≥1.17' < 11'	C6.5	C6.5	≥1.17' < 13'	D7	D7	10"
11' < 20'	D7	D7	13' < 20'	E5	E5	10"
20' < 28'	E5	E5	20' < 28'	F5	F5	10"
28' - 40'	F5	F5	28' - 40'	G5	G5	10"
SIZE: 16'-0" (Precast Only)						
	Inside	Outside		Inside	Outside	
≥1.17' < 10'	C6.5	C6.5	≥1.17' < 9'	D7	D7	9"
10' < 18'	D7	D7	9' < 13'	D4.5	D4.5	9"
18' < 25'	E5	E5	13' < 19'	E5	E5	9"
25' - 35'	F5	F5	19' < 27'	F5	F5	9"
			27' - 35'	G5	G5	9"
SIZE: 20'-0"						
	Inside	Outside		Inside	Outside	
≥1.17' < 10'	C6.5	C6.5	≥1.17' < 8'	D7	D7	10"
10' < 17'	D7	D7	8' < 12'	E5	E5	10"
17' - 30'	E5	E5	12' < 20'	F5	F5	10"
			20' - 30'	G5	G5	10"
SIZE: 20'-0" (Precast Only)						
	Inside	Outside		Inside	Outside	
≥1.17' < 8'	C6.5	C6.5	≥1.17' < 8'	D4.5	D4.5	9"
8' < 13'	D7	D7	8' < 12'	E5	E5	9"
13' - 25'	E5	E5	12' < 19'	F5	F5	9"
			19' - 25'	G5	G5	9"

REINFORCING SCHEDULE				
SCHEDULE	GRADE 60 BARS OR 65 KSI & 70 KSI WELDED WIRE REINFORCING			
	GRADE 60 AREA ($in.^2/ft.$)	MAXIMUM SPACING		
		GR 60 BARS (in.)	WWR EQUIV. AREA*	
			65 KSI (in.)	70 KSI (in.)
A12	0.20	12	8	8
A6	0.20	6	5	4½
B10	0.24	10	8	7½
B5.5	0.24	5½	5	4
C6.5	0.37	6½	6	5
C3.5	0.37	3½	3	2½
D7	0.53	7	6	5
D4.5	0.53	4½	4	3½
E5	0.73	5	4	4
E3	0.73	3	3	3
F5	1.06	5	4	4
F3.5	1.06	3½	3	3
G5	1.45	5	4	4
G.3.5	1.45	3½	3	3
H4	1.75	4	3	3

*Equivalent Area Welded Wire Reinforcing may be substituted in accordance with Index No. 201, Sheet 4.

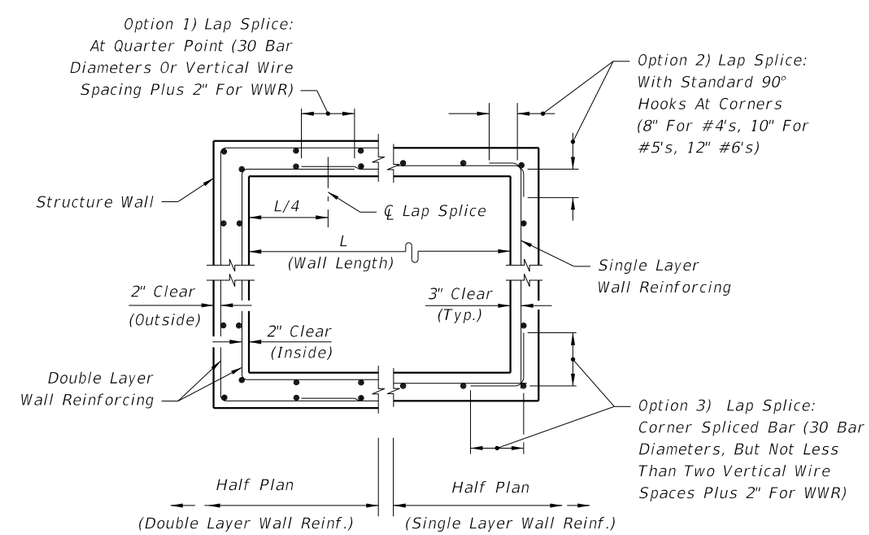

WALL REINFORCING SPLICE DETAILS
(ALTERNATE B)

10/11/2016 10:15:02 AM