210 Arterials and Collectors

210.1 General

Design criteria presented in this chapter apply to new construction and reconstruction projects on arterials and collectors on the State Highway System. Roadways not on the State Highway System which are impacted by these new construction and reconstruction projects should also be designed in accordance with this manual; however, districts may allow the use of the Manual of Uniform Minimum Standards for Design, Construction and Maintenance for Streets and Highways (commonly known as the "***Florida Greenbook***").

Modification for Non-Conventional Projects:
Delete the last sentence of the above paragraph and see RFP for requirements.

This chapter also provides minimum criteria to be used with Resurfacing, Restoration, and Rehabilitation (RRR) projects as described in ***FDM 210.1.1***.

Facilities on the Strategic Intermodal System (SIS) are subject to special standards and criteria for number of lanes, design speed, access, and level of service. Design all SIS and Emerging SIS Highway Intermodal Connectors in accordance with the SIS criteria contained in this manual. With approval by the District Design Engineer, the ***Florida Greenbook*** may be used on SIS facilities that are not on the State Highway System.

Modification for Non-Conventional Projects:
Delete the last sentence of the above paragraph and see RFP for requirements.

Many design criteria are related to design speed; e.g., vertical and horizontal geometry, sight distance. The minimum design values are closely related to traffic safety and require an approved Design Exception or Design Variation when they are not met. See ***FDM 201*** for information on Design Speed. See ***FDM 122*** for information on Design Exceptions and Design Variations.

Example roadway typical sections are included in the exhibits in ***FDM 306***. Criteria regarding lanes, medians, and shoulders for bridges are illustrated in ***FDM 260.1.1.*** Subsequent sections of this chapter contain specific information and criteria regarding these and other typical section elements, as well as geometric features.

210.1.1 Criteria for RRR Projects

Criteria for RRR projects provided in this chapter are the minimum values allowed for roadway and structure elements to remain on the State Highway System without obtaining a Design Exception or Design Variation (see ***FDM 122***). Existing project features are to meet new construction criteria when RRR criteria are not provided.

Existing project features which were constructed to meet minimum metric design criteria, but are mathematically slightly less than equivalent minimum English design criteria, do not require Design Exceptions or Design Variations to remain.

New features installed on RRR projects are to meet new construction criteria. However, RRR criteria may be used for establishing the minimum requirements for adding auxiliary lanes, keyhole lanes, or other minor intersection improvements with the understanding that when existing R/W is adequate, new construction criteria will be used to the maximum extent feasible.

210.1.2 Railroad-Highway Grade Crossing

If a railroad-highway grade crossing is within or near the limits of the project, and there are Federal Funds associated with the project, see ***FDM 220.2.4*** for requirements.

210.1.3 Aviation and Spaceports

If an airport or spaceport is within 10 nautical miles of the project, refer to ***FDM 110.5.1*** for requirements.

210.2 Lanes

Design criteria for lane widths and pavement slopes are given by lane type, design speed and context classification. Minimum travel, auxiliary, and two-way left-turn lane widths are provided in ***Table 210.2.1***. Refer to ***FDM 211*** for ramp lane widths.

Two-way left turn lane widths (flush median) may be used on 3-lane and 5-lane typical sections with design speeds ≤ 40 mph. On new construction projects, flush medians are to include sections of raised or restrictive median to enhance vehicular, bicycle, and pedestrian safety, improve traffic efficiency, and attain the standards of the Access Management Classification of that highway system. Sections of raised or restrictive medians are recommended on RRR projects.

Table 210.2.1 – Minimum Travel and Auxiliary Lane Widths

Context Classification		Travel (feet)			Auxiliary (feet)			Two-Way Left Turn (feet)	
		Design Speed (mph)			Design Speed (mph)			Design Speed (mph)	
		25-35	40-45	≥ 50	25-35	40-45	≥ 50	25-35	40
C1	Natural	11	11	12	11	11	12	N/A	
C2	Rural	11	11	12	11	11	12		
C2T	Rural Town	11	11	12	11	11	12	12	12
C3	Suburban	10	11	12	10	11	12	11	12
C4	Urban General	10	11	12	10	11	12	11	12
C5	Urban Center	10	11	12	10	11	12	11	12
C6	Urban Core	10	11	12	10	11	12	11	12

Notes:

Travel Lanes:

(1) Minimum 11-foot travel lanes on designated freight corridors, SIS facilities, or when truck volume exceeds 10% on very low speed roadways (design speed ≤ 35 mph) (regardless of context).

(2) Minimum 12-foot travel lanes on all undivided 2-lane, 2-way roadways (for all context classifications and design speeds). However, 11-foot lanes may be used on 2-lane, 2-way curbed roadways that have adjacent buffered bicycle lanes.

(3) 10-foot travel lanes are typically provided on very low speed roadways (design speed ≤ 35 mph), but should consider wider lanes when transit is present or truck volume exceeds 10%.

(4) Travel lanes should not exceed 14 feet in width.

Auxiliary Lanes:

(1) Auxiliary lanes are typically the same width as the adjacent travel lane.

(2) Table values for right turn lanes may be reduced by 1 foot when a bicycle keyhole is present.

(3) Median turn lanes should not exceed 15 feet in width.

(4) For high speed curbed roadways, 11-foot minimum lane widths for dual left turn lanes are allowed.

(5) For RRR Projects, 9-foot right turn lanes on very low speed roadways (design speed ≤ 35 mph) are allowed.

Two-way Left Turn Lanes:

(1) Two-way left turn lanes are typically one foot wider than the adjacent travel lanes.

(2) For RRR Projects, the values in the table may be reduced by 1-foot.

210.2.1 Bicycle Lanes

FDM 223 contains criteria for the accommodation of bicyclists.

210.2.2 Transit Facilities

Coordinate with the District Modal Development Office and local transit agency for the need for public transit facilities. ***FDM 225*** contains additional guidelines for street side bus stop facilities, location and design.

Modification for Non-Conventional Projects:
Delete first sentence in above paragraph and see RFP for requirements.

210.2.3 On-Street Parking

On-street parking is a key element of urban contexts C6, C5, and C4, but may also be found in C2T. It provides necessary parking supply in these locations, helps manage traffic speeds, and provides separation between the sidewalk and the travel lanes. In these context zones, leave existing on-street parking in place unless local plans call for its removal. Where on-street parking is not present in C6, C5, or C4, determine whether it should be added per local plan, for speed management, or to increase available parking.

On-street parking is allowed on facilities with posted speeds of 35 mph or less. It is typically located at the outside edge of the roadway between the travel lane and the sidewalk. In C6 and C5 contexts it may sometimes be located within the median of a divided low speed urban street. Median parking provides additional parking supply as well as speed management.

On-street parking may be either parallel or angle (traditional or reverse). See ***Chapter 316, F.S.*** for laws governing parking spaces.

Standard Plans, Index 711-001 provides dimensions and additional requirements for on-street parking.

See ***FDM 223*** for bicycle accommodations on roadways with on-street parking.

Parking restrictions to assure adequate clear sight triangles are provided in ***FDM 212.11.5***.

210.2.4 Pavement Cross Slopes

For roadways, the maximum number of travel lanes with cross slope in one direction is three lanes except as shown in ***Figure 210.2.1***, which prescribes standard pavement cross slopes. A Design Variation or a Design Exception is required when proposed pavement cross slopes do not meet the requirements shown in ***Figure 210.2.1***.

The maximum algebraic difference in cross slope between adjacent through lanes is 0.04. The maximum algebraic difference in cross slope between a through lane and an auxiliary lane at a turning roadway terminal is given in ***Table 210.2.2***.

Cross slopes on bridges are to be on a uniform, straight-line rate, typically 0.02 (see ***FDM 260.4***). Use transitions to adjust for differences in cross slope between the approach roadway section and the required straight-line slope for bridge decks. Whenever possible the transition should be accomplished on the roadway section, outside the limits of the bridge and approach slabs. This will require detailing of the transition(s) in the roadway plans. Coordination between the Roadway, Drainage and Structures designers in the development of transitions is required to ensure compatibility and harmonizing at bridge approaches.

Figure 210.2.1 Standard Pavement Cross Slopes

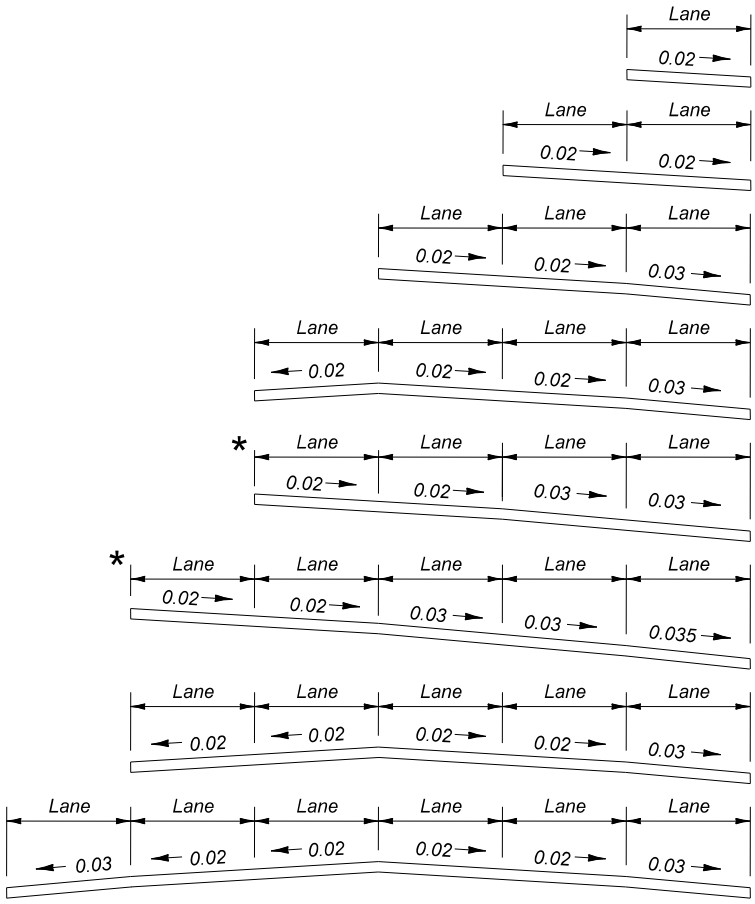

All Travel Lanes One Direction

(1) These sections show only the standard slopes for adjoining travel lanes; they do not prescribe needed lanes, lane usage or typical section requirements other than lane slope. These slopes are not applicable to parabolic crowns.

(2) Maximum pavement cross slopes for tangent sections are:

(a) 0.04 for design speeds of 45 mph or less

(b) 0.03 for design speeds greater than 45 mph

(c) 0.035 may only be used for 5-lanes sloped in one direction as shown above for all design speeds.

(3) The maximum change in cross slope between adjacent through lanes is 0.04.

(4) Slopes on multi-purpose lanes may be 0.03 to 0.05. Portions of multi-purpose lanes that are reserved for parking and access isles for the physically disabled are to have cross slopes not exceeding 1:50 (0.02) in all directions.

(5) 4 or 5 lanes sloped in one direction (*) may be used with design speed 65 mph or less and longitudinal grades not exceeding 5%.

Table 210.2.2 Maximum Algebraic Difference in Cross Slope at Turning Roadway Terminals

Design Speed of Exit or Entrance Curve (mph)	Maximum Algebraic Difference in Cross Slope at Crossover Line (%)
Less than 35	6.0
35 and over	5.0

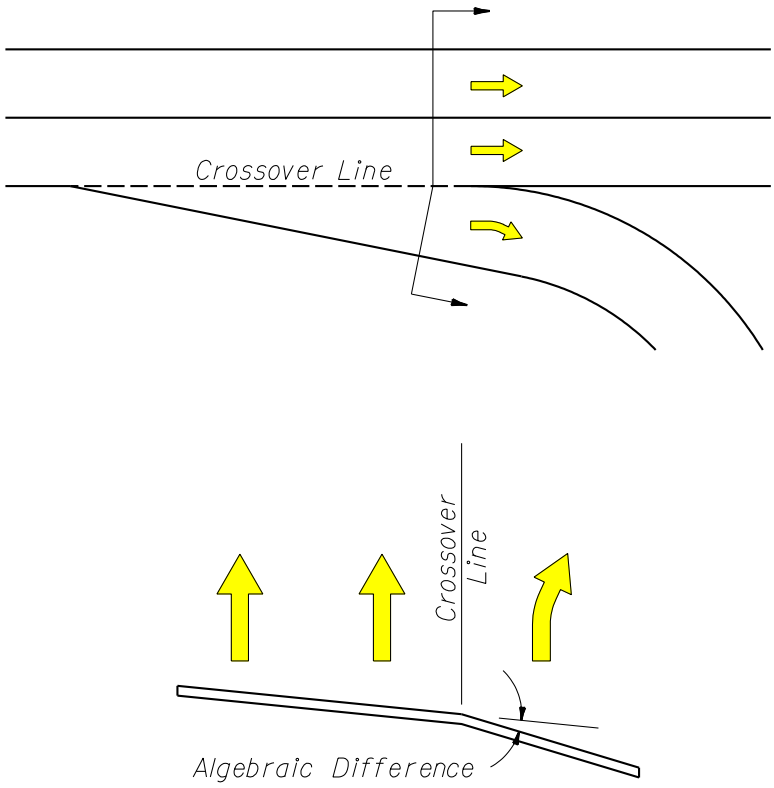

210.2.4.1 RRR Criteria for Cross Slopes

Review the existing pavement and shoulder cross slopes for compliance with criteria. Field verify existing pavement and shoulder cross slopes by one of the following:

(1) Full Digital Terrain Model for the roadway width – evaluate cross slope on tangent sections at 100-foot intervals.

(2) Vehicle Mounted Scanner – prior to design, using the results of the scan, determine roadway limits where cross slope is potentially out of tolerance and request Digital Terrain Model of the roadway width for these limits. Evaluate cross slope on tangent sections at 100-foot intervals.

If cross slopes do not meet the values in ***Table 210.2.3***, additional cross sections may be required to develop cross slope correction details and estimate material quantities. Resurfaced pavement and shoulder cross slopes should meet new construction criteria. When cross slope correction is not practical, documentation in the design file is required. If existing conditions are within the allowable range shown in ***Table 210.2.3***, the term “Match Existing” may be used on the Typical Section(s) to indicate that the existing cross slope is to remain. Superelevation requirements are covered in ***FDM 210.9***.

When cross slope correction is necessary, work closely with the District Pavement Design Engineer and the District Bituminous Engineer to determine the appropriate method of correction. Tabulate existing cross slopes in the plans at 100-foot intervals within the limits of cross slope correction. Include cross slope correction details showing the method of correction in the plans (see examples in ***FDM 306***). Do not show cross slope correction details on the roadway cross sections. Base cross slope correction material quantities on the method of correction shown in cross slope correction details.

Table 210.2.3 RRR Criteria for Existing Roadway Cross Slopes

Facility or Feature	Standard (ft/ft)	Allowable Range (ft/ft)
Two-Lane Roads	0.02	0.015 - 0.030
Multilane Roads	0.02	0.015 - 0.040
	0.03	0.025 - 0.040
	0.035	0.030 - 0.040
Outside Shoulders	0.06	Adjacent Lane Cross Slope - 0.080
Inside Shoulders	0.05	0.020 - 0.080
Parking Lanes	0.05	0.015 - 0.050

Notes:

(1) Existing multilane curbed roadways may have outside lanes with a maximum cross slope of 0.05.

(2) The maximum algebraic difference between adjacent through lanes must not exceed 0.06.

(3) When existing shoulders are to remain, the algebraic difference between the shoulder slope and adjoining roadway pavement slope must be ≤ 0.07.

(4) Parking spaces and access aisles dedicated to serving persons with disabilities must have cross slopes no steeper than 0.02 (1:50) in any direction.

Existing curbed roadways originally constructed with a parabolic crown section may be resurfaced using a series of tangents with a cross slope range from 0.015 to 0.05.

210.2.4.2 Hydroplaning Risk Analysis

The hydroplaning risk analysis predicts the water film thickness on the pavement being analyzed and the speed at which hydroplaning may occur. This information may support utilizing a non-compliant typical section when weighed against the cost of correcting pavement cross slope. Coordinate with the District Drainage Engineer to determine whether a hydroplaning analysis is needed.

Modification for Non-Conventional Projects:
Delete last sentence in above paragraph and see RFP for requirements.

When a hydroplaning risk analysis is performed, use the HP Program and the Design Guidance: Hydroplaning Risk Analysis. The Hydroplaning Tools can be downloaded under Design Aids at:

http://www.fdot.gov/roadway/Drainage/ManualsandHandbooks.shtm

210.2.5 Roadway Transitions

The minimum merging roadway transition length (L) is calculated as follows:

(1) Use $L = (W*S^2)/60$ for design speeds ≤ 40 mph

(2) Use $L = W*S$ for design speeds ≥ 45 mph

Where: L = length of taper, feet

W = width of lateral transition, feet

S = design speed, mph

Exhibit 210-1 through ***210-6*** illustrate standard roadway transitions. For conditions not addressed in these figures, use the following minimum taper lengths:

- Merging Taper = L
- Shifting Taper = L/2
- Shoulder Taper = L/3

Where an abrupt change in roadway typical (e.g., 4-lane section to a 6-lane section) a striped lane transition may be considered when all the following conditions are met:

- New pavement widths are not substantially greater than the joining pavement,
- Grade differentials are slight, and
- Future widening is expected.

210.2.6 Number of Lanes on the State Highway System

See ***Section 335.02(3)*** of the ***Florida Statutes*** for the number of lanes to be provided on the State Highway System. Nothing in this statute precludes a number of lanes in excess of ten lanes. The Department will determine the appropriate number of lanes based on traffic demand. Consideration will be given to availability of right of way and the capacity to accommodate other modes of transportation within existing rights of way.

Exceptions to ***Section 335.02(3)*** of the ***Florida Statutes*** will be addressed on a case-by-case basis, with final approval resting with the Secretary of Transportation.

LANE DIVERGENCE AND CONVERGENCE FOR CENTERED ROADWAYS

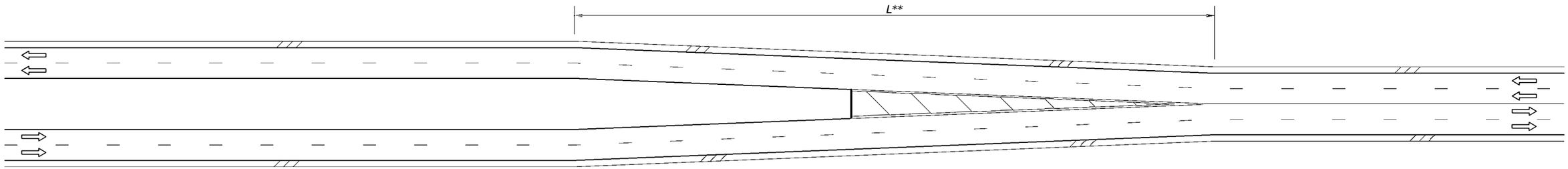

4-LANE DIVIDED TO 4-LANE UNDIVIDED

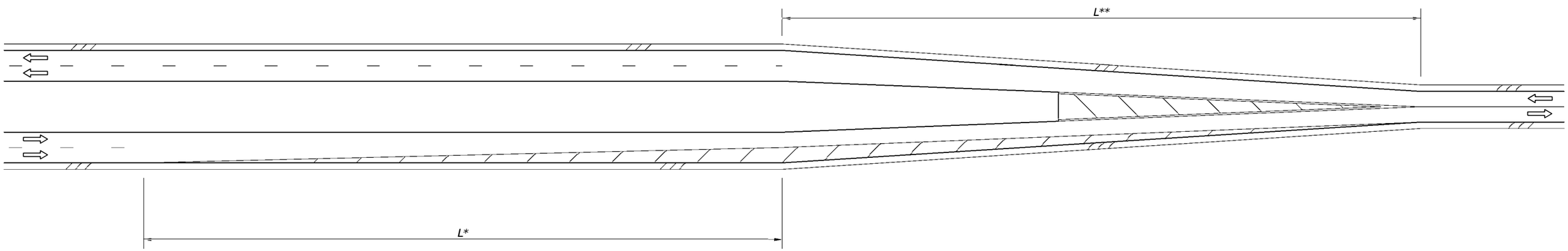

4-LANE DIVIDED TO 2-LANE UNDIVIDED

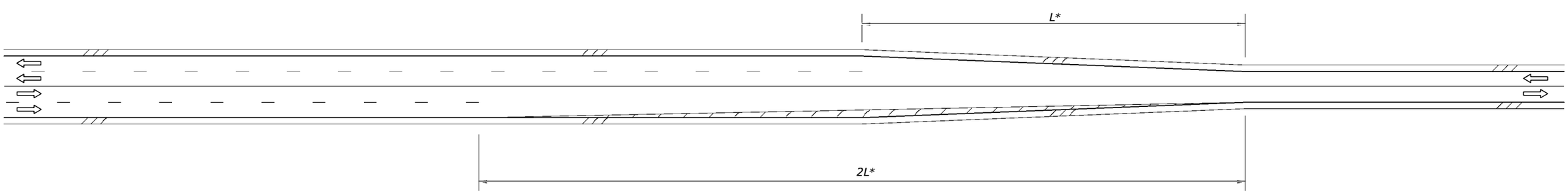

4-LANE UNDIVIDED TO 2-LANE UNDIVIDED

$L = \frac{WS^2}{60}$ FOR DESIGN SPEEDS ≤ 40 mph

$L = WS$ FOR DESIGN SPEEDS ≥ 45 mph

WHERE: L = LENGTH OF TAPER, FEET
W = WIDTH OF LATERAL TRANSITION, FEET
S = DESIGN SPEED, mph

* W = ONE LANE WIDTH
** W = 1/2 MEDIAN WIDTH

NOT TO SCALE

EXHIBIT 210-1
01/01/2018

PAVED SHOULDER TREATMENT AT TRANSITIONS AND CONNECTIONS

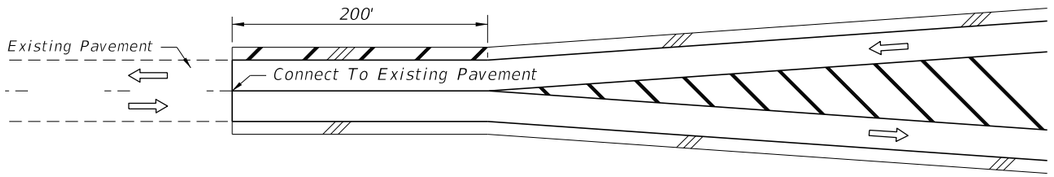

CONNECTING FLARE WITH PAVED SHOULDERS TO
EXISTING ROADWAY WITHOUT PAVED SHOULDERS

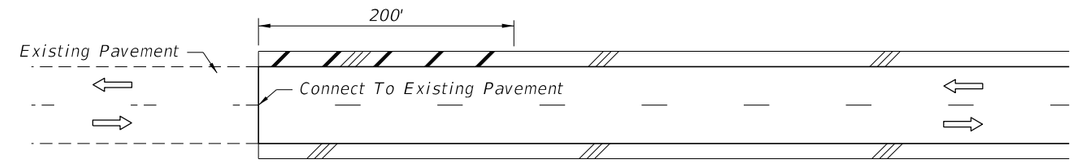

CONNECTING SIMILAR WIDTH PAVEMENTS

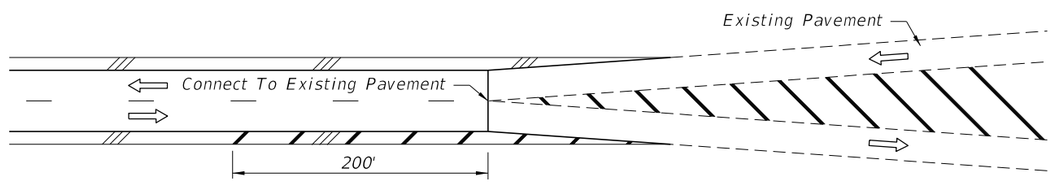

CONNECTING ROADWAY WITH PAVED SHOULDERS TO
EXISTING SYMMETRICAL FLARE WITHOUT PAVED SHOULDERS

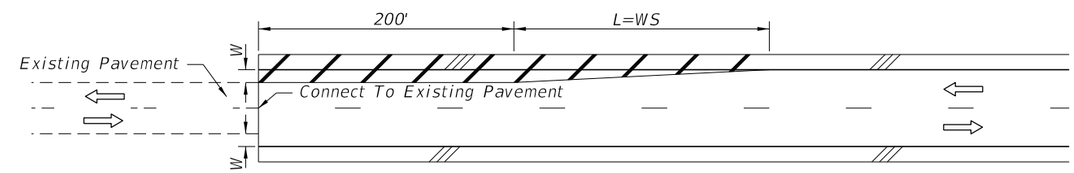

CONNECTING DIFFERENT WIDTH PAVEMENTS

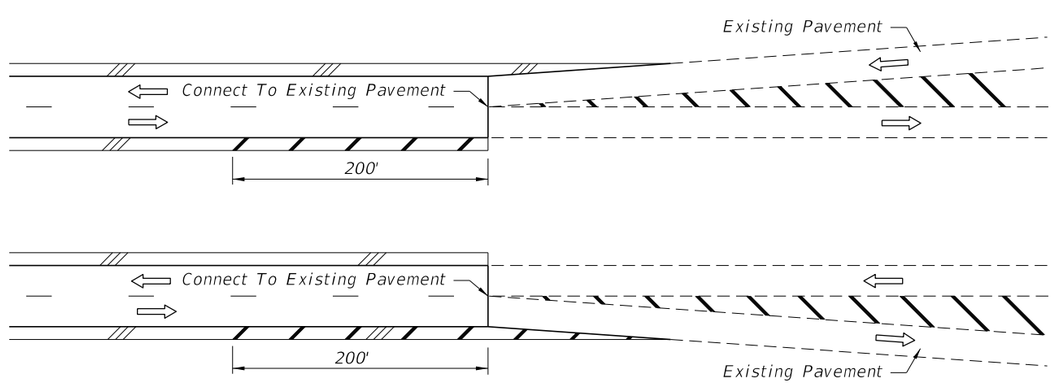

CONNECTING ROADWAY WITH PAVED SHOULDERS TO
EXISTING ASYMMETRICAL FLARE WITHOUT PAVED SHOULDERS

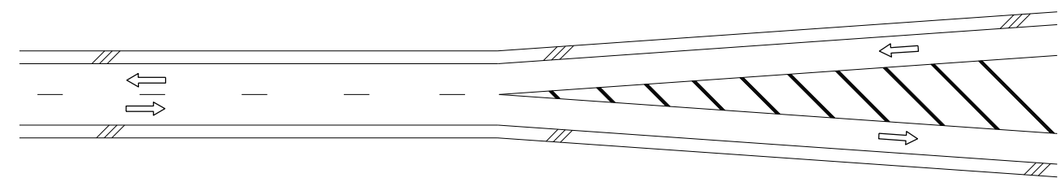

FLARED - PAVED SHOULDERS

NOT TO SCALE

EXHIBIT 210-2
01/01/2018

TWO LANE TO FOUR LANE TRANSITION:
LEFT ROADWAY CENTERED ON APPROACH ROADWAY

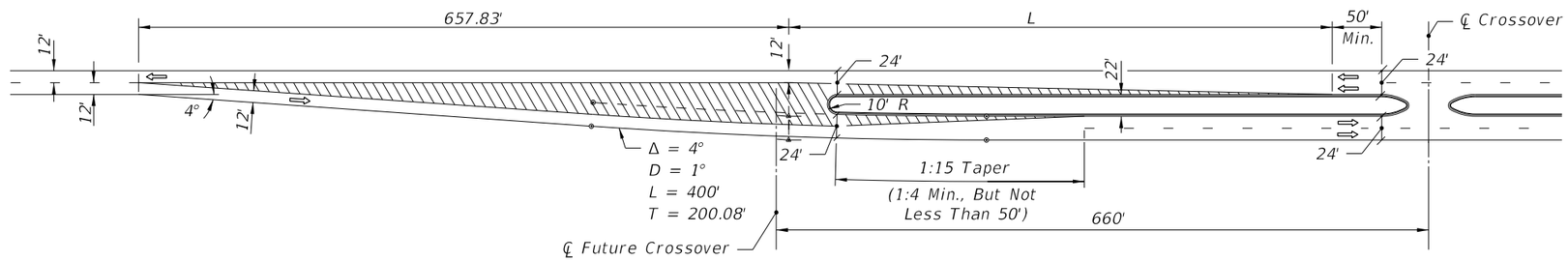

22' MEDIAN

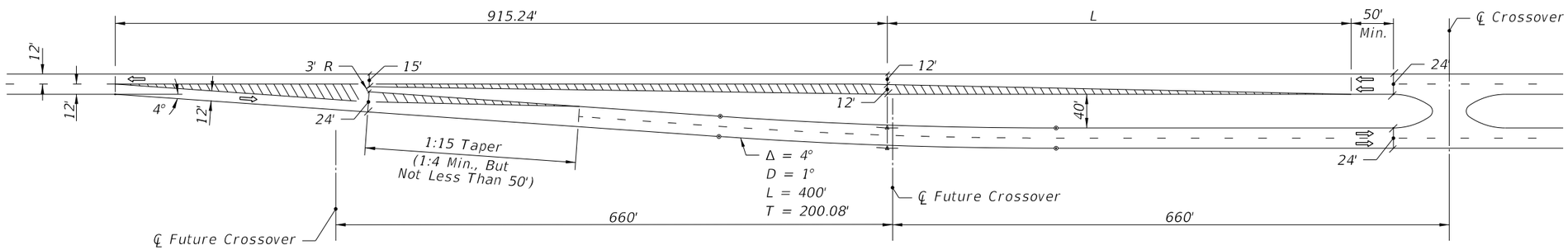

40' MEDIAN

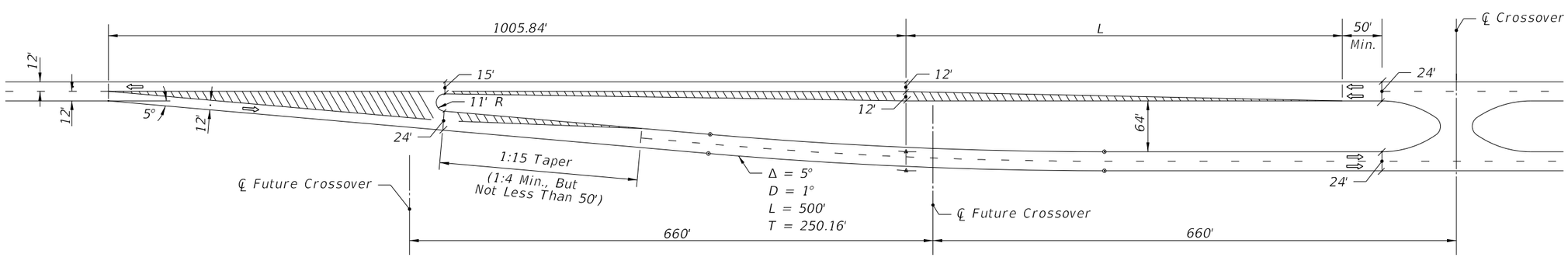

64' MEDIAN

$L = \frac{WS^2}{60}$ FOR DESIGN SPEEDS ≤ 40 mph

$L = WS$ FOR DESIGN SPEEDS ≥ 45 mph

WHERE: L = LENGTH OF TAPER, FEET
W = WIDTH OF LATERAL TRANSITION, FEET
S = DESIGN SPEED, mph

NOT TO SCALE

EXHIBIT 210-3
01/01/2018

FOUR LANE TO TWO LANE TRANSITION:
LEFT ROADWAY CENTERED ON THRU ROADWAY

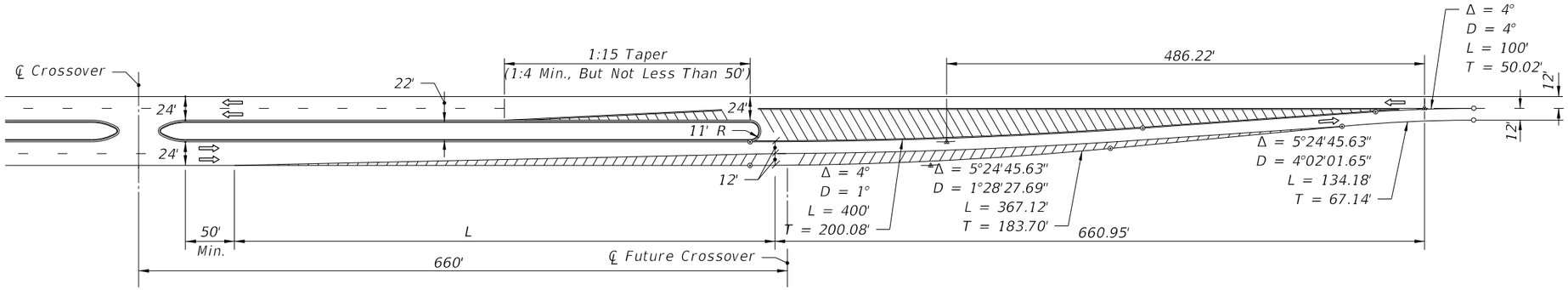

22' MEDIAN

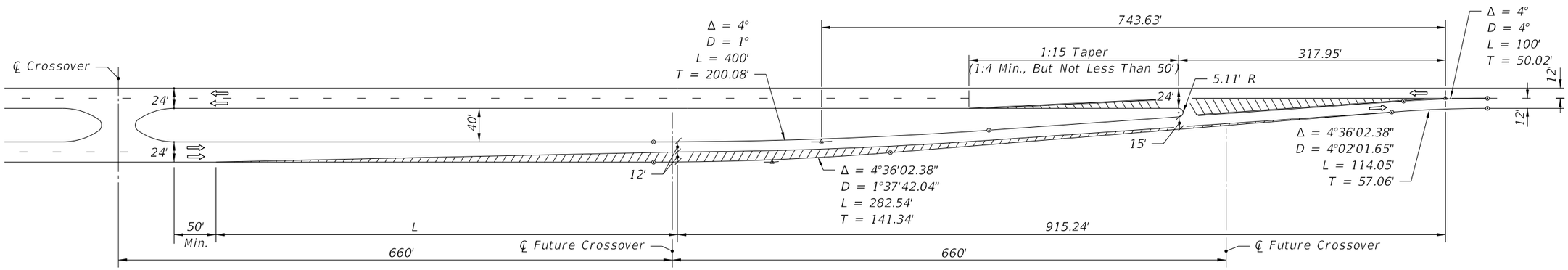

40' MEDIAN

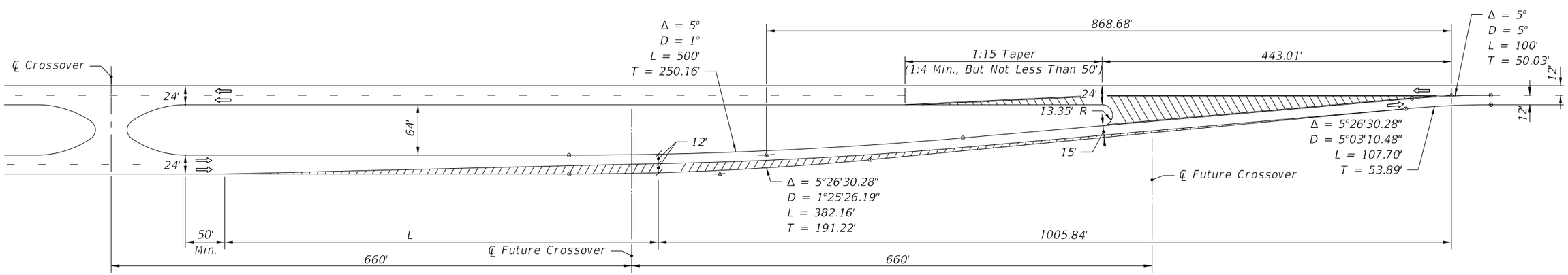

64' MEDIAN

$L = \frac{WS^2}{60}$ FOR DESIGN SPEEDS ≤ 40 mph

$L = WS$ FOR DESIGN SPEEDS ≥ 45 mph

WHERE: L = LENGTH OF TAPER, FEET
W = WIDTH OF LATERAL TRANSITION, FEET
S = DESIGN SPEED, mph

NOT TO SCALE

EXHIBIT 210-4
01/01/2018

TWO LANE TO FOUR LANE TRANSITION:
RIGHT ROADWAY CENTERED ON APPROACH ROADWAY

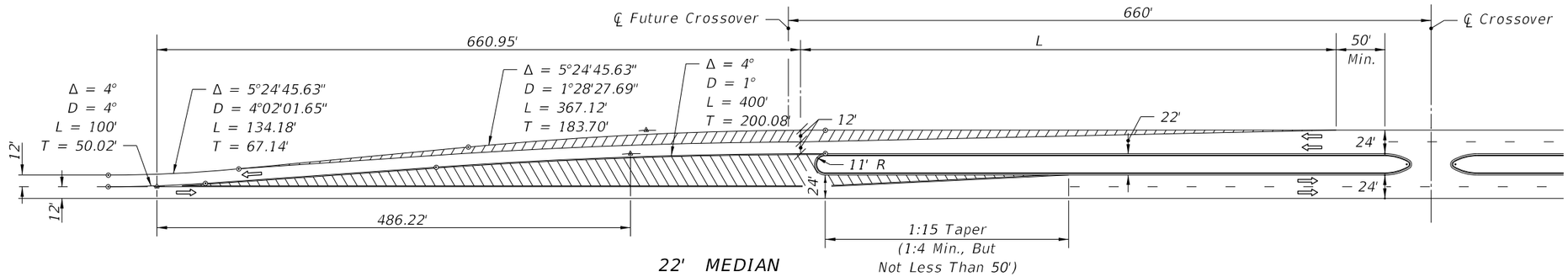

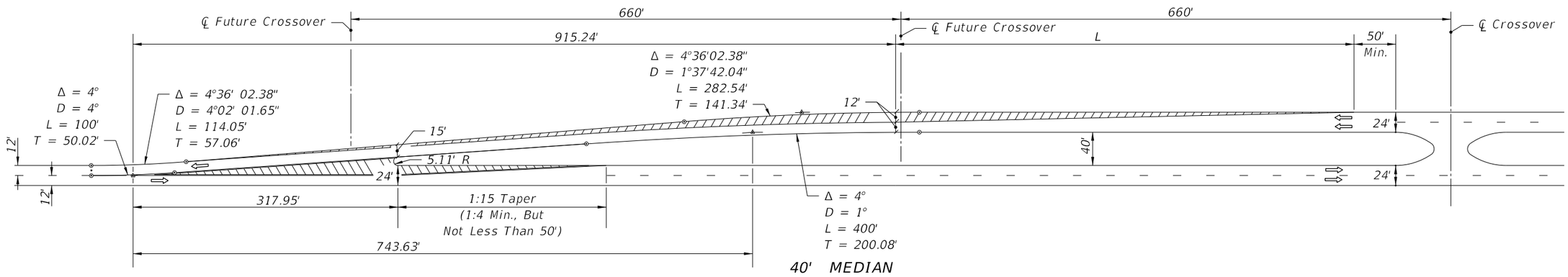

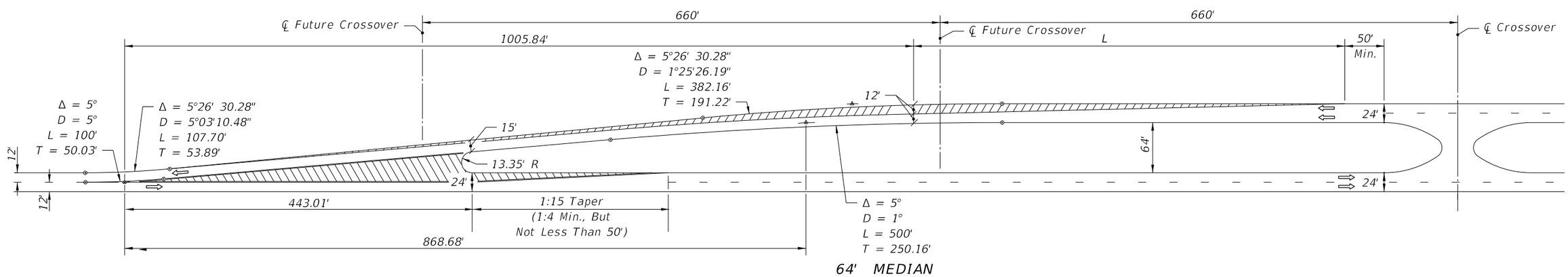

$L = \frac{WS^2}{60}$ FOR DESIGN SPEEDS ≤ 40 mph

$L = WS$ FOR DESIGN SPEEDS ≥ 45 mph

WHERE: L = LENGTH OF TAPER, FEET
W = WIDTH OF LATERAL TRANSITION, FEET
S = DESIGN SPEED, mph

NOT TO SCALE

EXHIBIT 210-5
01/01/2018

FOUR LANE TO TWO LANE TRANSITION:
RIGHT ROADWAY CENTERED ON THRU ROADWAY

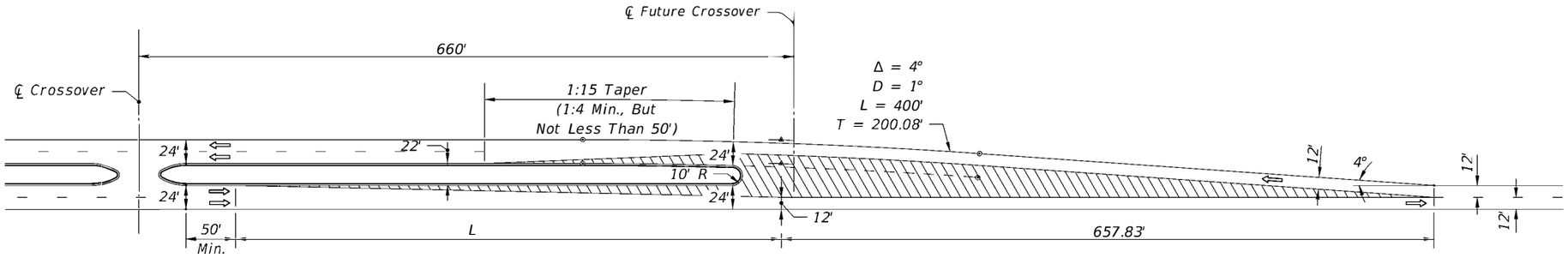

22' MEDIAN

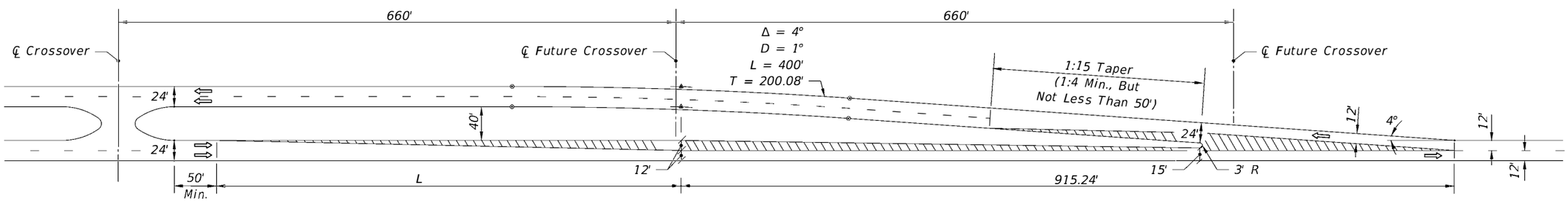

40' MEDIAN

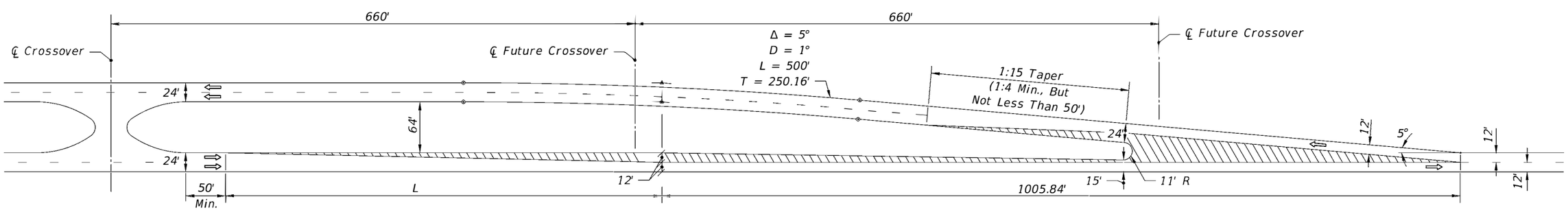

64' MEDIAN

$L = \frac{WS^2}{60}$ FOR DESIGN SPEEDS ≤ 40 mph

$L = WS$ FOR DESIGN SPEEDS ≥ 45 mph

WHERE: L = LENGTH OF TAPER, FEET
W = WIDTH OF LATERAL TRANSITION, FEET
S = DESIGN SPEED, mph

NOT TO SCALE

EXHIBIT 210-6
01/01/2018

210.3 Median

Median width is expressed as the dimension between the inside edges of traveled way. Medians perform the following functions:

- Provide separation of opposing traffic to minimize risk of head on crashes,
- Provide a recovery area for errant vehicles,
- Provide a stopping area in case of emergencies,
- Allow space for speed changes and storage of left-turning and U-turning vehicles,
- Minimize headlight glare,
- Provide width for future lanes,
- Provide pedestrian refuge,
- Control access.

Provide a raised or restrictive median on divided roadways that have a design speed of 45 mph or greater. Median widths for divided roadways are given in ***Table 210.3.1***.

Median ditches must be designed to meet the following requirements:

- Have sufficient depth to provide positive drainage of the adjacent sub-grades. Typically, this requires a median depth of at least one foot below the sub-grade shoulder point.

- Have recoverable side slopes within the clear zone in order to facilitate the recovery of errant vehicles. See ***FDM 215*** for additional information on roadside safety.

- Have sufficient longitudinal gradient and hydraulic capacity to ensure good drainage.

210.3.1 Bridge Median

See ***FDM 260.5*** for information on bridge medians.

Table 210.3.1 Median Widths

Context Classification		Curbed Roadways and Flush Shoulder Roadways (feet)		High Speed Curbed Roadways (feet)	Flush Shoulder Roadways (feet)
		Design Speed (mph)			
		25-35	40-45	50-55	≥ 50
C1	Natural	N/A	N/A	30	40
C2	Rural	N/A	N/A	30	40
C2T	Rural Town	15.5	22	N/A	N/A
C3	Suburban	22	22	30	40
C4	Urban General	15.5	22	N/A	N/A
C5	Urban Center	15.5	N/A	N/A	N/A
C6	Urban Core	15.5	N/A	N/A	N/A

Notes:

(1) On reconstruction projects where existing curb locations are fixed due to severe right of way constraints, the minimum median width may be reduced to 19.5 feet for design speeds = 45 mph, and to 15.5 feet for design speeds ≤ 40 mph.

(2) A minimum 6-foot median may be used within C5 and C6 context classifications only where left turn lanes are not expected.

210.4 Shoulders

Roadway shoulder width is measured from the edge of the traveled way to the shoulder break. A portion of the shoulder is required to be paved on all roadways on the State Highway System. Shoulder widths for roadways are given in ***Table 210.4.1***. See ***Figure 210.4.1*** for an illustration of roadway shoulders. Refer to ***FDM 211*** for ramp shoulder widths. Refer to ***FDM 260.3*** for bridge shoulder widths.

Construct roadway paved shoulders up to the railroad crossing shoulder pavement as shown in ***Standard Plans***, ***Index 830-T01***. For additional information see ***FDM 220*** and ***Standard Plans***, ***Index 509-070***.

Figure 210.4.1 Shoulder Width Identification

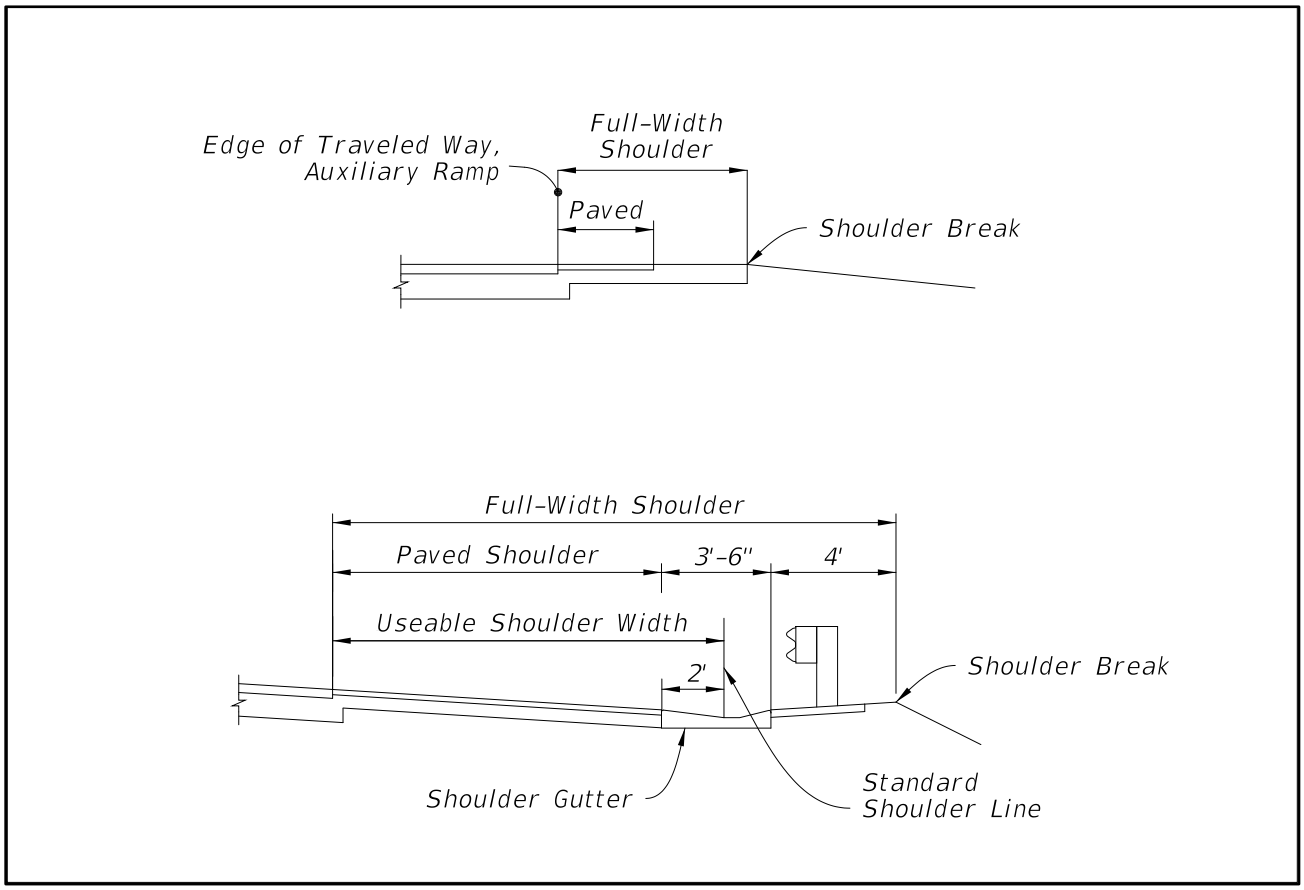

Table 210.4.1 Standard Shoulder Widths

Lane Type	# Lanes (One Direction)	Without Shoulder Gutter				With Shoulder Gutter			
		Outside		Median Or Left		Outside		Median Or Left	
		Full Width (feet)	Paved Width (feet)	Full Width (feet)	Paved Width (feet)	Full Width (feet)	Paved Width (feet)	Full Width (feet)	Paved Width (feet)
Travel Lanes	4-Lane or more	10	5	10	4	15.5	8	15.5	8
	3-Lanes	10	5	10	0	15.5	8	15.5	8
	1-Lane & 2-Lane	10	5	8	0	15.5	8	13.5	6
Aux. Lanes	ALL	10	5	8	0	11.5	4	11.5	4

Notes:

Without shoulder gutter:

(1) Consider 12-foot outside full width shoulder adjacent to travel lanes with high AADT or greater than 10% trucks.

(2) Consider providing a minimum 10-foot median shoulder where continuous barrier wall or guardrail is present.

(3) Provide a 7-foot outside paved shoulder when it is determined that the Helmeted Bicyclist Symbol and Bicycle Lane Arrow pavement markings will be placed on the shoulder. See ***FDM 223.2.2***.

(4) Shoulder widths for auxiliary lanes typically match those of the adjacent roadway; however, width may be reduced to 6-foot shoulder with 2-foot paved for right turn lanes when a bicycle keyhole is present.

(5) For 1-lane, 2-lane, and 3-lane median or left shoulders:

(a) Pave 2-feet wide where turf is difficult to establish.

(b) Pave 4-feet wide: (1) in sag vertical curves, 100 feet minimum either side of the low point, and (2) on the low side of superelevated traffic lanes extending through the curves and approximately 300 feet beyond the PC and PT.

(6) For RRR Projects, the following may be retained:

(a) existing 6-foot or greater full width shoulder

(b) existing 4-foot paved outside shoulder adjacent to travel lane

(c) existing 2-foot paved outside shoulder adjacent to auxiliary lane

With shoulder gutter:

(1) Paved shoulders less than 6 feet in width with adjoining shoulder gutter must be the same type, depth and cross slope as the roadway pavement.

(2) Shoulders must extend 4 feet beyond the back of shoulder gutter and have a 0.06 cross slope back toward the gutter.

(3) Required shoulder widths for auxiliary lanes typically match those of the adjacent roadway.

210.4.1 Shoulder Cross Slopes

The standard cross slope is 0.06 on the outside shoulder and 0.05 on the median (or left) side. ***Figure 210.4.2*** illustrates shoulder cross slopes in relationship to roadway cross slopes for normal and superelevated sections. For 5-foot (or less) paved shoulders, see ***Figure 210.4.3***. If the inside travel lane is sloping toward the median, then the inside shoulder cross slope may be increased to 0.06.

For projects constructed with concrete pavement, the first one foot of the outside shoulder is cast with the outside travel lane and will have the same cross slope (and superelevation) as the outside lane. Superelevation of the shoulder pavement is to be rotated about the outside edge of the outside slab.

For shoulder cross slope criteria on bridges see ***FDM 260.4***.

Figure 210.4.2 Shoulder Superelevation

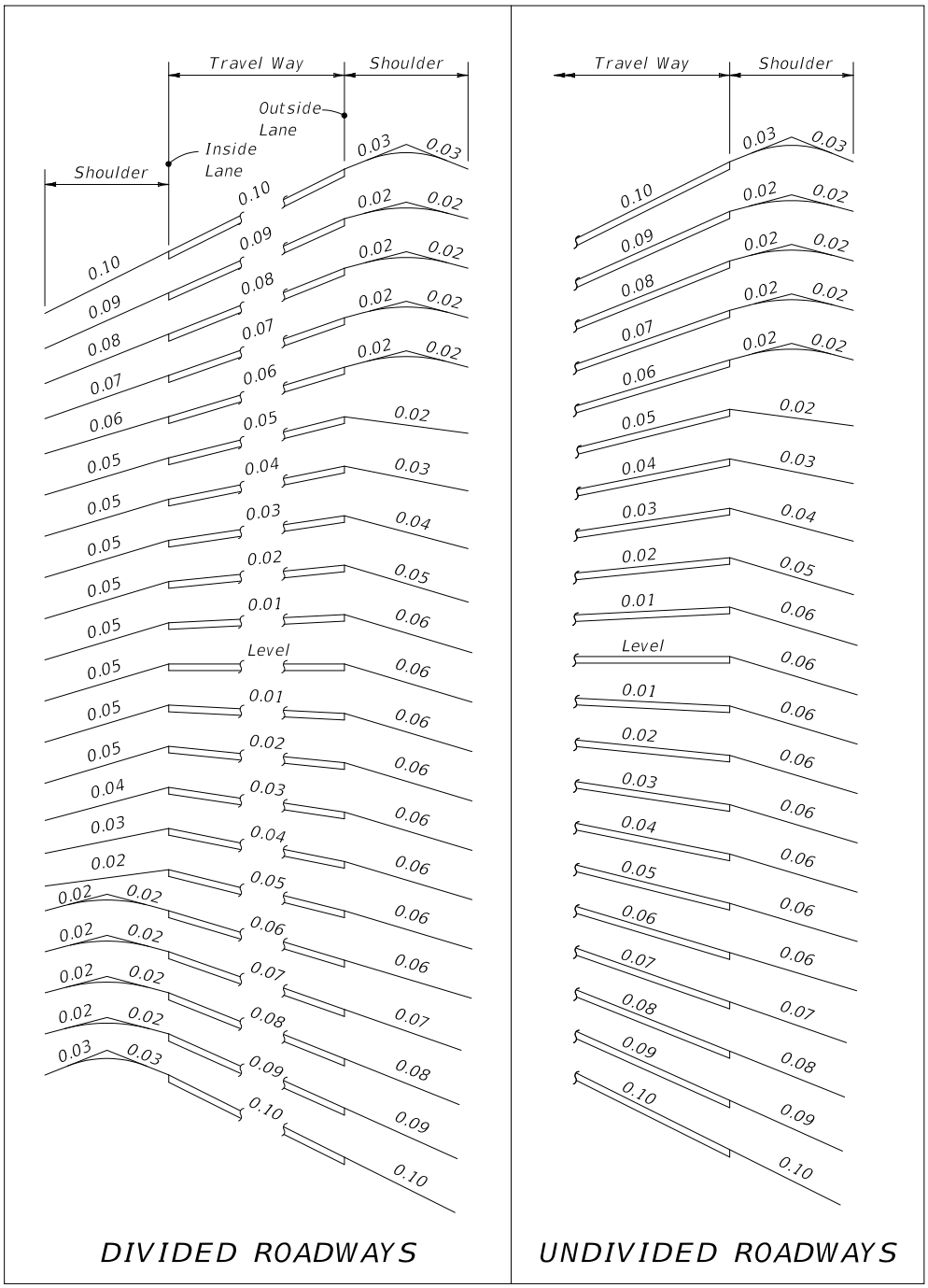

Figure 210.4.3 Special Shoulder Superelevation

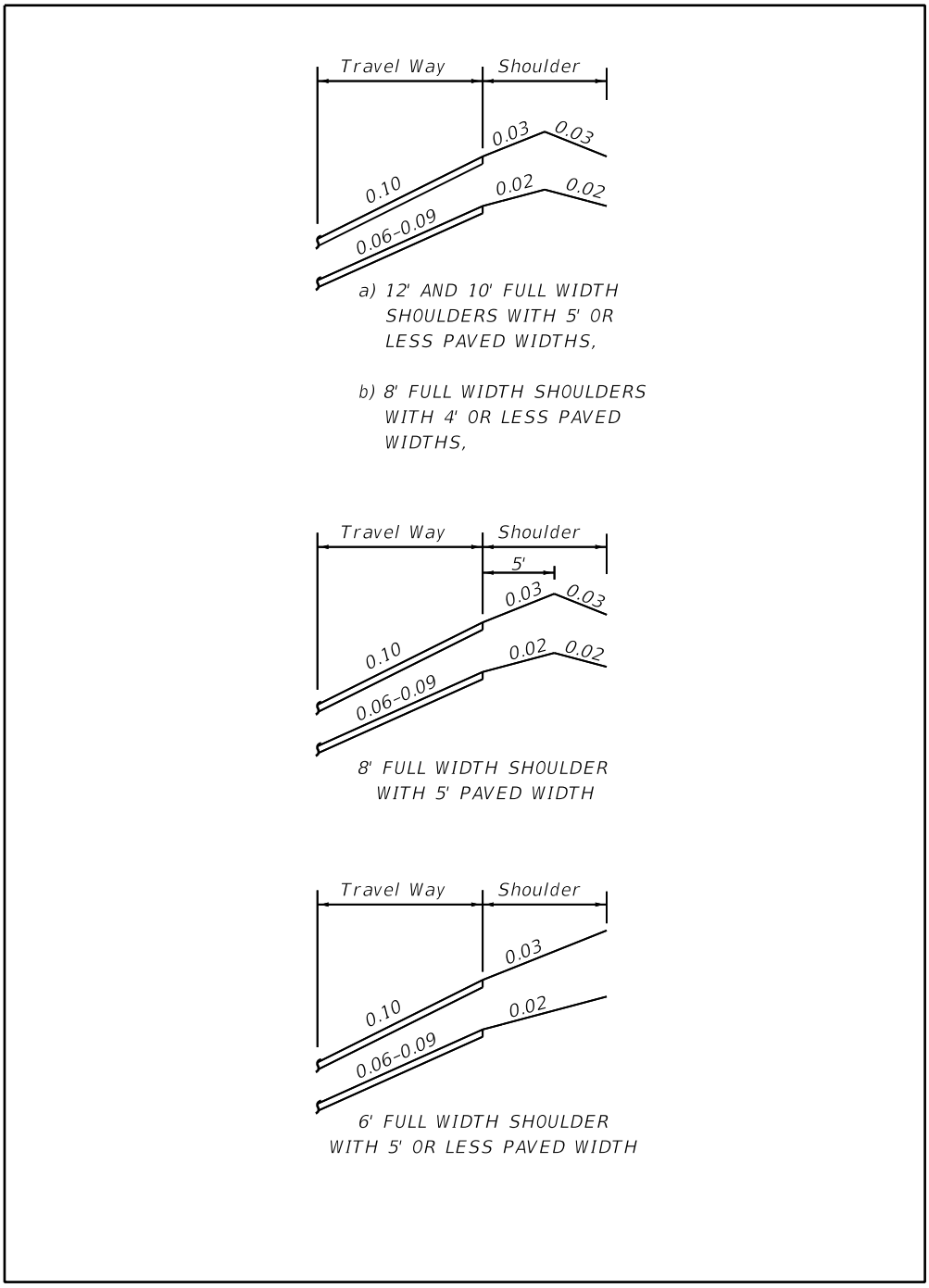

210.4.2 Typical Paving under Bridge

See ***FDM 260.7*** for requirements for paving under bridges.

210.4.3 Limits of Friction Course on Paved Shoulders

Extend friction course (closed and open graded) over the full width of the median and outside paved shoulders.

210.4.4 RRR Shoulder Treatment

Identify the shoulder treatment option in the plans when using ***Standard Plans***, ***Index 570-010***. Use Treatment I only if the shoulder is established with good soil and turf, and there is no significant shoulder erosion. Use Treatment II when an existing shoulder meets the overlay thickness requirements for Treatment I, but there is significant shoulder erosion.

210.4.5 Narrow Bridge Shoulder Warning Devices

The ***Standard Plans***, ***Index 700-106***, provides details for the shoulder treatment to be used on flush shoulder roadway approaches to a narrow bridge. This index provides standards for the placement of signing, striping, object markers and raised pavement marking (RPMs) for use at structures where the bridge shoulder width is less than the width of the useable shoulder on the approach roadway.

210.4.6 Audible and Vibratory Treatment

Provide audible and vibratory treatment (AVT) on flush-shoulder roadways with a posted speed of 50 mph or greater. Do not exclude sections of the project where advisory speeds are used due to restricted horizontal or vertical geometry. Do not place AVTs within the limits of crosswalks.

Figure 210.4.4 provides guidance for placement of AVTs. See ***FDM 325*** for information regarding plan requirements.

AVTs on arterials and collectors are any of the following:

- Cylindrical Ground-In Rumble Strips,
- Sinusoidal Ground-In Rumble Strips, or

- Profiled Thermoplastic.

Consider potential noise impacts to residents and business adjacent to the roadway when selecting an appropriate AVT. A higher probability of strikes should be expected on the inside radius of horizontal curves. The expected increase in noise levels over typical road noise is as follows:

- Approximately 6 decibels for cylindrical ground-in rumble strips.
- Approximately 4 decibels for sinusoidal ground-in rumble strips.
- Approximately 2 decibels for profiled thermoplastic.

AVT type selected for each edge line or centerline should be consistent throughout the project length: however, there may be clear change in condition for which a change in the AVT type is appropriate. Use the same type of treatment for centerlines as is used for edge lines on undivided roadways.

Determine the appropriate AVT in accordance with ***FDM 210.4.6.1*** and ***FDM 210.4.6.2***.

210.4.6.1 Ground-in Rumble Strips

***Standard Plans*, Index 546-010** provides three configurations (Types A, B, and C) for ground-in rumble strips along edge lines. The selection of Type A, B, or C is as follows:

- Use Type A on outside paved shoulder when width is between 1 and 5 feet. Do not use this type for sinusoidal ground-in rumble strips, or when there are residences within a minimum of 650 feet of the proposed edge line.
- Use Type B on outside paved shoulder when width is ≥ 5 feet, and on inside paved shoulder when width is ≥ 1 foot.
- Use Type C on flush shoulder roadways with buffered striping.

Sinusoidal ground-in rumble strips produce less noise, and are an alternative to the cylindrical ground-in rumble strips. They may be used for Types B and C in noise-sensitive locations.

Use Type D on centerlines on undivided roadways.

Ground-in rumble strips are to be detailed (i.e., limits, Type A, B, or C) and quantified in the Signing and Marking Plans component set. Include “1” for cylindrical ground-in rumble strips or “2” for sinusoidal ground-in rumble strips: e.g., A1, B1, B2, C1, C2.

See ***Exhibit 210-7*** for common placement of AVTs.

210.4.6.2 Profiled Thermoplastic

Used profiled thermoplastic when any of the following conditions exist:

- Rigid pavement
- The requirements for installing ground-in rumble strips cannot be met
- Paved shoulder width prevents the construction phasing required for installation of ground-in rumble strips
- Restriping projects where District Maintenance Engineer has determined ground-in rumble strips are not cost effective based on the remaining service life of the pavement.
- Edge lines for bridges with narrow shoulders as a countermeasure for barrier impacts.

Figure 210.4.4 Audible and Vibratory Treatment Placement

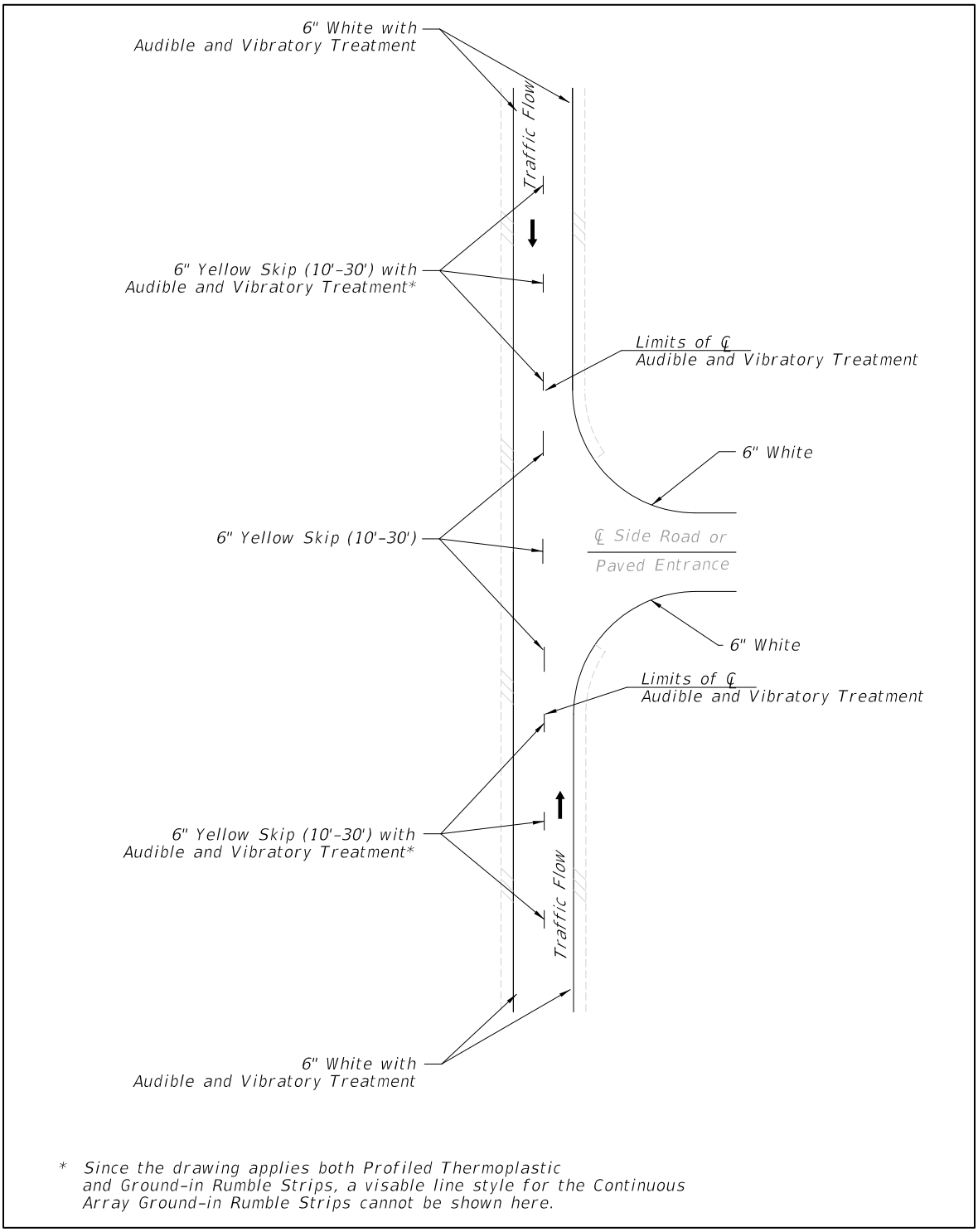

Figure 210.4.4 Audible and Vibratory Treatment Placement (Cont.)

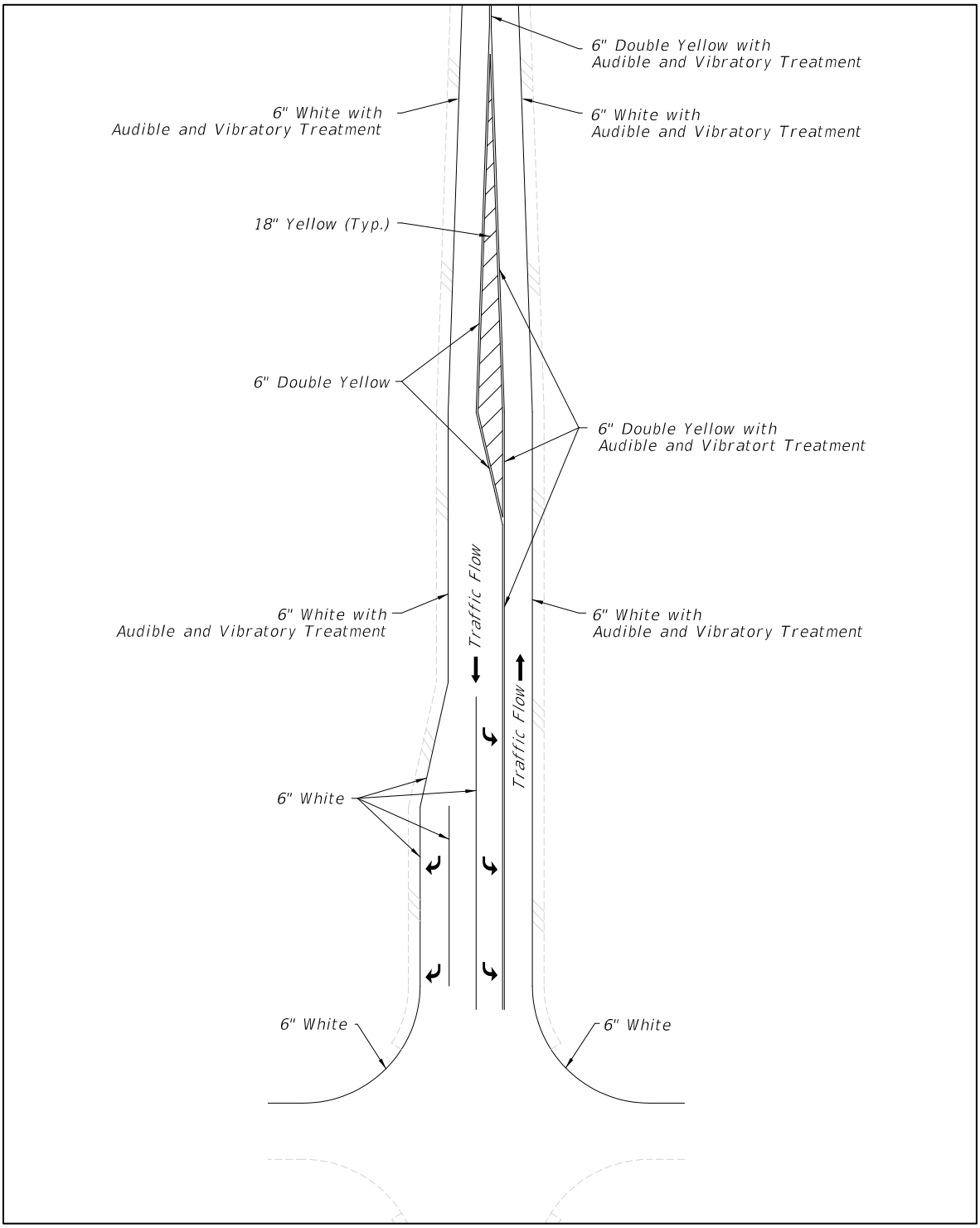

Figure 210.4.4 Audible and Vibratory Treatment Placement (Cont.)

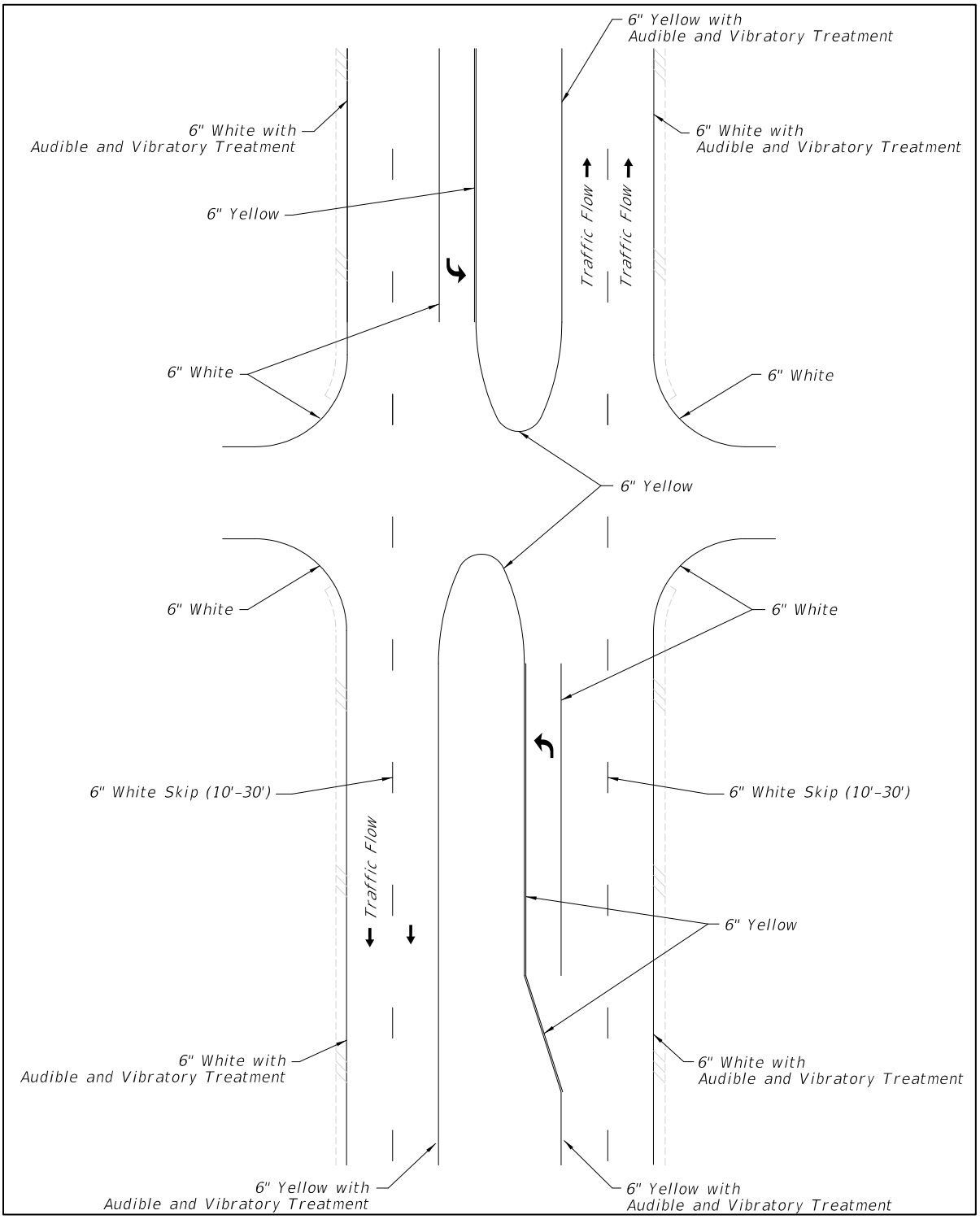

Figure 210.4.4 Audible and Vibratory Treatment Placement (Cont.)

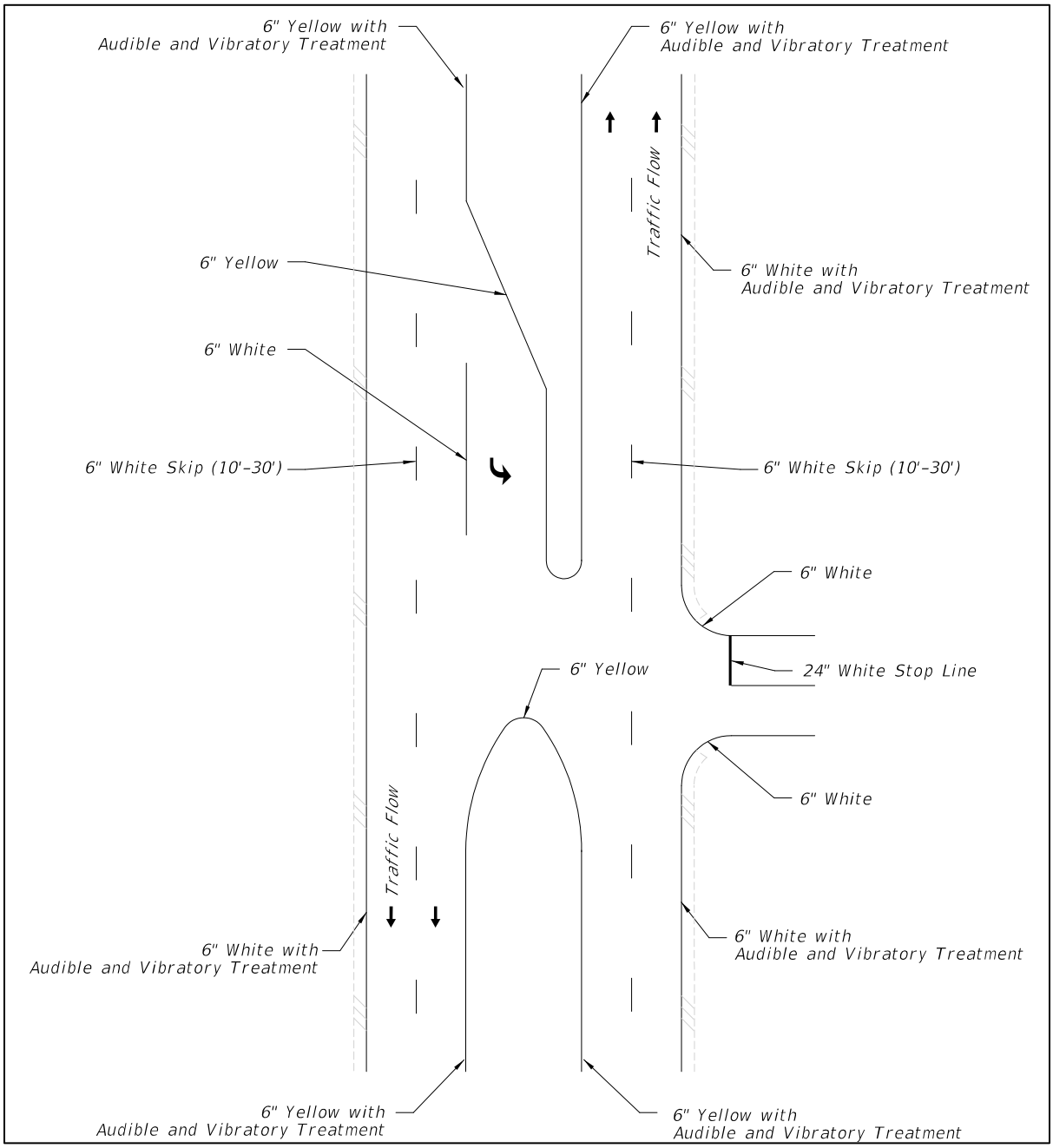

Figure 210.4.4 Audible and Vibratory Treatment Placement (Cont.)

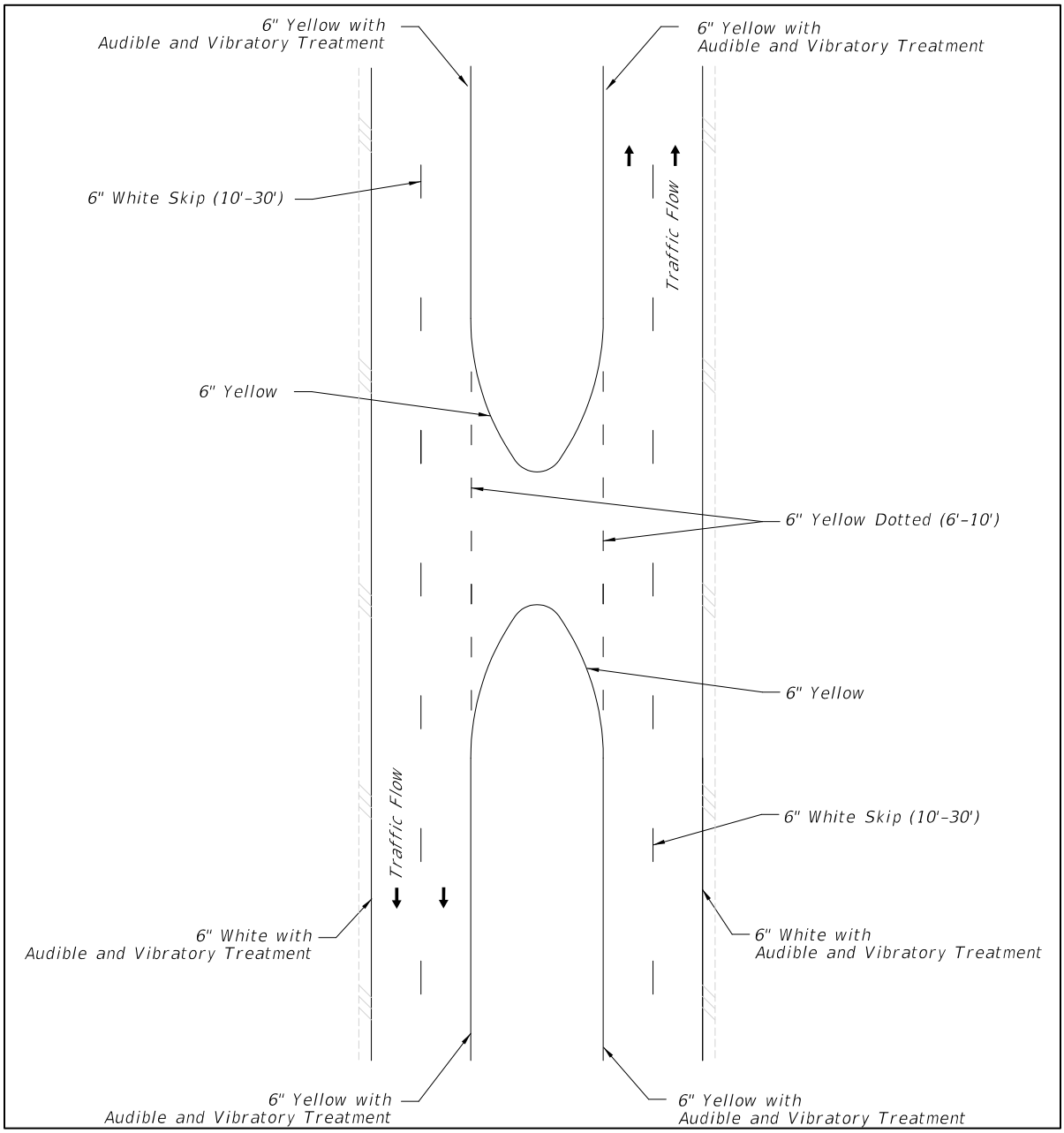

COMMON PLACEMENT OF AUDIBLE AND VIBRATORY TREATMENTS

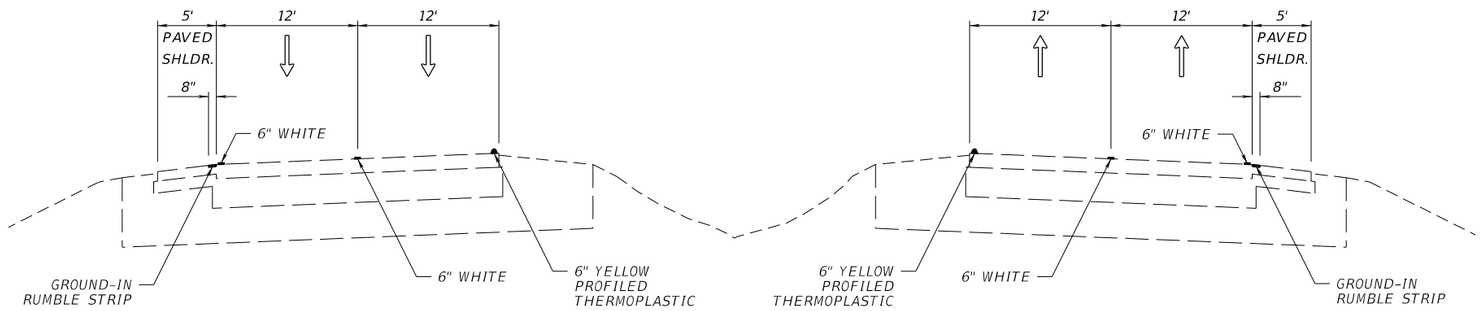

MULTILANE DIVIDED WITHOUT PAVED INSIDE SHOULDERS

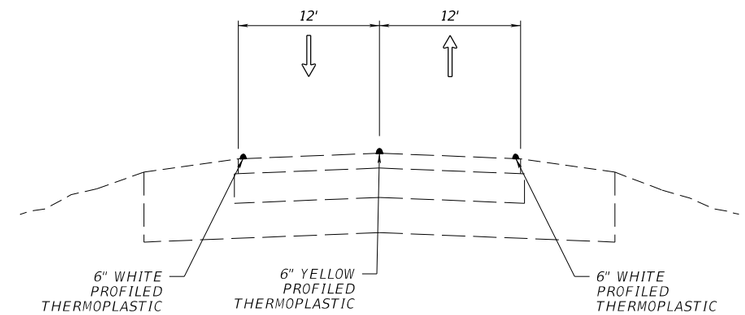

UNDIVIDED WITHOUT PAVED SHOULDERS

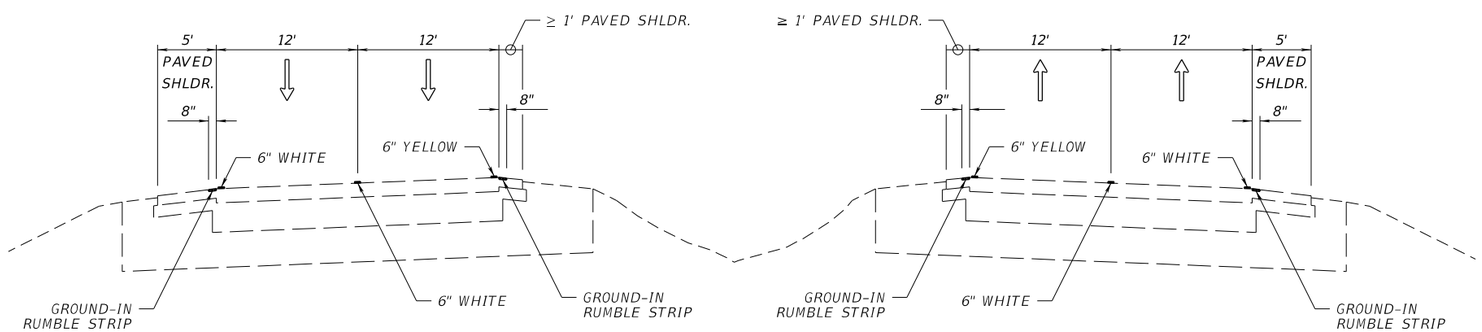

MULTILANE DIVIDED WITH PAVED INSIDE SHOULDERS

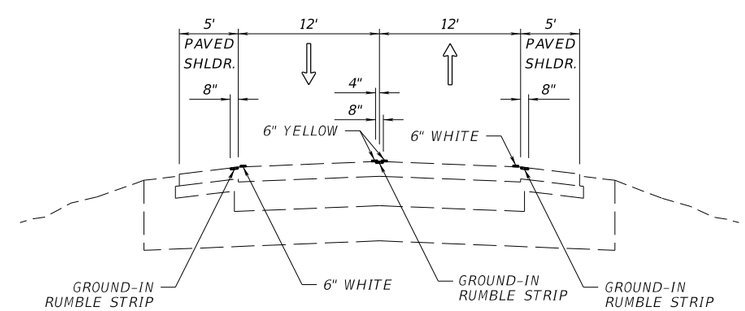

UNDIVIDED WITH PAVED SHOULDERS

NOT TO SCALE

EXHIBIT 210-7
03/07/2019

210.5 Curbed Roadways

The term “curbed” includes all types of curb, and curb and gutter that are used on the state highway system and detailed in ***Standard Plans***, ***Index 520-001***.

The method of collecting and conveying drainage runoff and the availability of R/W determines the cross section; i.e. flush shoulder or curbed. When it is determined that a closed drainage system will be used, the selection of curb type will be based on the design speed.

Curbed roadways with design speeds of 45 mph or less, typically use Type F curb on the outside and Type E curb on the median (or left) side.

See ***FDM 215.2.7.2***, for additional information regarding curbs and their placement.

210.5.1 High-Speed Curbed Roadways

Curbs may be used on roadways where the anticipated operating speeds require a design speed of 50-55 mph and:

(1) Curbs are necessary to control drainage, or

(2) R/W is constrained

High speed curbed sections are typically used within C3 context classification and transitional areas.

High speed curbed roadways are to use Type E curb on both the median and outside. Provide an offset from the edge of the traveled way to the lip of the curb as follows:

(1) 4-foot to median curb for 4-lane roadway sections.

(2) 6.5-foot to median curb for 6-lane roadway sections.

(3) 6.5-foot to outside curb for all roadway sections.

210.6 Roadside Slopes

Criteria and details for roadside slopes are included in ***FDM 215***.

210.7 Border Width

Border width provides space for:

(1) Roadside design components such as signing, signals, lighting, drainage features, guardrail, fencing and clear zone, sidewalks with ADA provisions, traffic control devices, fire hydrants, storm drainage features, bus and transit features, permitted public utilities and space for aesthetic features such as sod and other landscape items.

(2) A buffer between vehicles and pedestrians,

(3) Construction and maintenance of the facility, and

(4) Permitted public utilities.

Required border width is provided in ***Table 210.7.1***. Border width is measured to the R/W line as follows:

- **Flush shoulder roadways**: from the shoulder break.
- **Curbed roadways**: from the outside edge of the pavement (lip of gutter).
- **High-speed curbed roadways**: from the outside edge of the traveled way.

Table 210.7.1 Minimum Border Width

Context Classification		Minimum Border Width (Feet)					
		Curbed and High-Speed Curbed Design Speed (mph)				Flush Shoulder Design Speed (mph)	
		25-40	45	50	55	25-45	≥ 50
C1	Natural	N/A	N/A	29	35	N/A	40
C2	Rural	N/A	N/A	29	35	N/A	40
C2T	Rural Town	12	14	N/A	N/A	33	N/A
C3	Suburban	12	14	29	35	33	40
C4	Urban General	12	14	N/A	N/A	33	N/A
C5	Urban Center	12	N/A	N/A	N/A	N/A	N/A
C6	Urban Core	14	N/A	N/A	N/A	N/A	N/A

Notes:

(1) On low speed curbed roadways that have an adjacent bike lane, the required border width shown in the table may be reduced by 2 feet.

(2) On existing roadways where R/W cannot be acquired or where the decision has been made to simply maintain and preserve the facility, the absolute minimum border under these conditions is 8 feet. No Design Variation is required for this condition.

(3) On existing roadways where R/W is being acquired for other reasons, the minimum border width should be that used for new construction projects; however, the minimum length of wider border width must be a segment of sufficient length to provide reasonable continuity.

210.8 Horizontal Alignment

The centerline (CL) or baseline (BL) of construction defines the horizontal alignment for roadway and bridge construction. The CL or BL of construction is a series of tangents connected by horizontal curves established by the Engineer of Record (EOR). CL or BL of construction may be the same alignment as the BL of survey.

Horizontal alignment should be consistent with the expected posted speed and with environmental, physical, and economic constraints. Design speed is the principal factor controlling horizontal alignment.

Avoid placing horizontal curves, point of intersection (PI), and superelevation transitions within the limits of a structure or approach slabs. Placement of stationing equations within the limits of a structure should be avoided on contract plans. Such equations unnecessarily increase the probability of error in both the design and construction phase.

210.8.1 Deflections in Alignment

The point where tangents intersect is known as the PI. Avoid the use of a PI with no horizontal curve; however, there may be conditions where it is necessary (e.g., closely-spaced intersections in areas with limited R/W). The maximum deflection without a horizontal curve are as follows:

- Flush shoulder and curbed roadways with design speed 40 mph and less is 2°00’00”.
- Flush shoulder roadways with design speed 45 mph and greater is 0°45’00”.
- Curbed roadways with design speed 45 mph and greater is 1°00’00”.
- High speed curbed roadways with design speed 50 mph and greater is 0°45’00”.

210.8.1.1 Intersections

Refer to ***FDM 212*** for information regarding deflections through intersections.

210.8.2 Horizontal Curves

A horizontal curve should not be introduced near the crest of a vertical curve. The combination of horizontal and vertical curves can greatly reduce sight distance; i.e., hide the horizontal curve from the approaching driver. The hazard can be avoided by having

the horizontal curvature lead the vertical curvature; i.e., the horizontal curve is made longer than the vertical curve.

Flatter curvature with shorter tangents is preferable to sharp curves connected by long tangents; i.e., avoid using minimum horizontal curve lengths.

Table 210.8.1 provides the horizontal curve lengths to be used in establishing the horizontal alignment. Refer to ***Table 210.8.3*** for compound curves.

Table 210.8.1 Length of Horizontal Curve

Desired Length Based on Design Speed (mph)										
mph	**25**	**30**	**35**	**40**	**45**	**50**	**55**	**60**	**65**	**70**
feet	400	450	525	600	675	750	825	900	975	1050

Desired Length Based on Deflection Angle					
degrees	**5°**	**4°**	**3°**	**2°**	**1°**
feet	500	600	700	800	900

Notes:

(1) The desired horizontal curve length shall be the greater of the lengths based on design speed and length based on deflection angle.

(2) When desirable horizontal curve length cannot be attained, provide the greatest attainable length possible, but not less than 400 feet.

210.8.2.1 Existing Horizontal Curves

Evaluate existing curves against the values shown in ***Table 210.8.2***. The review should include an on-site review for evidence of roadway departure or operational problems in the area of concern.

Table 210.8.2 Minimum Radius for Evaluation of Existing Horizontal Curves

Maximum Superelevation (e_{max})		Minimum Radius (feet)									
		Design Speed (mph)									
		25	30	35	40	45	50	55	60	65	70
0.10	SHS	160	231	323	432	559	694	881	1091	1348	1637
	RRR	120	188	276	388	521	674	849	1042	1273	1528
0.05	SHS	194	286	402	533	694	881	N/A	N/A	N/A	N/A
	RRR	140	223	332	468	637	849	N/A	N/A	N/A	N/A

Condition #1 – A horizontal curve that meets or exceeds the SHS minimum radius shown in ***Table 210.8.2*** is satisfactory unless there is a significant crash history (3 or more crashes within the most recent available certified 5-year data) or other evidence of safety or operational problems. If problems are identified, include corrective measures in the project.

Condition #2 – A horizontal curve that is below the SHS minimum radius shown in ***Table 210.8.2,*** but meets or exceeds the RRR minimum radius shown in ***Table 210.8.2*** must be reviewed for specific safety problems at the curve. If the review indicated significant operational or safety problems exist, the curve should be reconstructed. If problems are identified but reconstruction is not warranted, include corrective measures in the project.

Condition #3 – A horizontal curve that does not meet the RRR minimum radius shown in ***Table 210.8.2*** must be reconstructed or a Design Exception or Design Variation obtained. A reconstructed curve must meet the new construction values shown in ***Tables 210.8.1***, ***210.9.1***, ***210.9.2***, and ***210.9.3***.

210.8.2.2 Compound Curves

Although the use of compound curves is discouraged, there may be conditions where it is necessary. Avoid sudden changes from flat to sharp curves. For compound curves on open highways, the ratio of the flatter radius to the sharper radius is not to exceed 1.5:1. For compound curves on turning roadways and at intersections, a ratio of 2:1 may be used where the flatter radius precedes the sharper radius in the direction of travel.

The length of compound curves (arc length) for turning lanes are provided in ***Table 210.8.3***.

Table 210.8.3 Minimum Compound Curves Arc Lengths on Turning Roadways

Minimum Arc Length (feet)							
	Radius (feet)						
	100	150	200	250	300	400	≥ 500
Desirable	65	70	100	120	150	180	200
Minimum	40	50	65	85	100	120	150

Notes:

(1) Provide the desirable arc length. When the desirable length cannot be attained, provide the greatest attainable length possible, but not less than the minimum values.

210.8.2.3 Reverse Curves

Reverse curves are curves in opposite directions on a common tangent that are located in close proximity to each other. Avoid using reverse curves unless a sufficient length (see ***FDM 210.9.1***) of tangent is included between the curves to provide for superelevation transition.

210.9 Superelevation

Use a maximum superelevation rate of 0.10 on high speed roadways. Tabulated superelevation rates for high speed roadways are provided in ***Table 210.9.1***.

Use a maximum superelevation rate of 0.05 on low speed roadways. Tabulated superelevation rates for low speed roadways are provided in ***Table 210.9.2***.

Design non-limited access ramps using the arterial roadway criteria. Additional data is contained in the ***Standard Plans, Index 000-510*** and ***000-511***.

Provide the following minimum lengths of full superelevation within horizontal curves:

(1) 100 feet for design speed ≤ 45 mph.

(2) 200 feet for design speeds ≥ 50 mph.

210.9.1 Superelevation Transitions

The standard superelevation transition places 80% of the transition on the tangent and 20% on the curve. Superelevation transition slope rates are provided in ***Table 210.9.3***.

In transition sections where the travel lane(s) cross slope is less than 1.5%, provide one of the following grade criteria:

(1) Maintain a minimum profile grade of 0.5%

(2) Maintain a minimum edge of pavement grade of 0.2% (0.5% for curbed roadway).

When superelevation is required for reverse curves, a suitable tangent length between the curves is determined as follows:

(1) 80% of the transition for each curve should be located on the tangent.

(2) Tangent length is equal to or greater than the sum of the two 80% distances.

(3) Where alignment constraints require an adjustment to the superelevation transition, not more than 50% of the transition may be placed on the curve.

210.9.2 RRR Criteria for Superelevation

Superelevation requirements are provided in ***FDM 210.9*** and the ***Standard Plans***, ***Indexes 000-510*** and ***000-511***.

For curves not meeting superelevation requirements, conduct a study to determine if superelevation is a contributing factor to crashes in the curve. If the study indicates that more than one crash in a five year period can be linked to substandard superelevation, superelevation correction is required.

For high speed roadways, substandard superelevation must be corrected unless both of the following conditions are met:

(1) Study indicates that superelevation cannot be linked as a contributing factor to any crashes in the curve in a five year period

(2) The existing superelevation rate (based on design speed and curve radius) is within the range of values for e_{max} = 6% and e_{max} = 12%, provided in ***AASHTO A Policy on Geometric Design of Highways and Streets*** figures for Minimum Radii for Design Superelevation Rates, Design Speeds.

210.9.2.1 Superelevation Correction

This type of work may involve variable depth milling and asphalt layers. Provide the following information in the plans:

(1) Details showing how the transition from normal cross slope to superelevation is to be achieved.

(2) A table that summarizes the estimated quantities for milling, overbuild, and structural courses will be necessary.

(3) Cross sections depicting superelevation correction for the following locations:

  (a) At the PC and at the PT.

  (b) Fifty feet before and after the PC and PT.

  (c) At 300 ft. intervals within the curve.

For curbed roadways, superelevation correction should be provided by reconstructing or adjusting the curve to accommodate overbuild. When a correction is not possible, provide other measures appropriate to improve identified safety or operational problems.

Table 210.9.1 Superelevation Rates for e_{max} = 0.10

Superelevation Rates (e_{max} =0.10) Tabulated Values

Degree of Curve (D)	Radius R (ft.)	Design Speed (mph) 30	35	40	45	50	55	60	65	70
0° 15'	22,918	NC	NC	NC	NC	NC	NC	NC	NC	NC
0° 30'	11,459	NC	NC	NC	NC	NC	NC	RC	RC	RC
0° 45'	7,639	NC	NC	NC	NC	RC	RC	0.023	0.025	0.028
1° 00'	5,730	NC	NC	NC	RC	0.021	0.025	0.030	0.033	0.037
1° 15'	4,584	NC	NC	RC	0.022	0.026	0.031	0.036	0.041	0.046
1° 30'	3,820	NC	RC	0.021	0.026	0.031	0.037	0.043	0.048	0.054
	*R_{NC}									
2° 00'	2,865	RC	0.022	0.028	0.034	0.040	0.048	0.055	0.062	0.070
	*R_{RC}									
2° 30'	2,292	0.021	0.028	0.034	0.041	0.049	0.058	0.067	0.075	0.085
3° 00'	1,910	0.025	0.032	0.040	0.049	0.057	0.067	0.077	0.087	0.096
3° 30'	1,637	0.029	0.037	0.046	0.055	0.065	0.075	0.086	0.095	0.100
4° 00'	1,432	0.033	0.042	0.051	0.061	0.072	0.083	0.093	0.099	D_{max} = 3° 30'
5° 00'	1,146	0.040	0.050	0.061	0.072	0.083	0.094	0.098	D_{max} = 4° 15'	
6° 00'	955	0.046	0.058	0.070	0.082	0.092	0.099	D_{max} = 5° 15'		
7° 00'	819	0.053	0.065	0.078	0.089	0.098	D_{max} = 6° 30'			
8° 00'	716	0.058	0.071	0.084	0.095	0.100				
9° 00'	637	0.063	0.077	0.089	0.098	D_{max} = 8° 15'				
10° 00'	573	0.068	0.082	0.094	0.100					
11° 00'	521	0.072	0.086	0.097	D_{max} = 10° 15'					
12° 00'	477	0.076	0.090	0.099						
13° 00'	441	0.080	0.093	0.100						
14° 00'	409	0.083	0.096	D_{max} = 13° 15'						
15° 00'	382	0.086	0.098							
16° 00'	358	0.089	0.099							
18° 00'	318	0.093	D_{max} = 17° 45'							
20° 00'	286	0.097								
22° 00'	260	0.099								
24° 00'	239	0.100								
		D_{max} = 24° 45'								

Notes:

NC = Normal Crown (-0.02)
RC = Reverse Crown (+0.02)
R_{NC} = Minimum Radius for NC
R_{RC} = Minimum Radius for RC

(1) Rates for intermediate D's and R's are to be interpolated.
(2) Degree of Curvature (D) on high speed roadways must not exceed: 2° 30' for 50 mph and 2° 00' for 55 mph.
(3) Degree of Curvature (D) on interstate must not exceed 3° 00' for 70 mph.

*** NC/RC (- -) and RC/e (—) Break Points (Radius in feet)**

Break Points	Design Speed (mph) 30	35	40	45	50	55	60	65	70
R_{NC}	3349	4384	5560	6878	8337	9949	11709	13164	14714
R_{RC}	2471	3238	4110	5087	6171	7372	8686	9783	10955

Table 210.9.2 Superelevation Rates for e_{max} = 0.05

Superelevation Rates (e_{max} =0.05) Tabulated Values					
Degree of Curve (*D*)	Radius (R) (feet)	Design Speed (mph)			
		25-30	35	40	45
2° 00'	2,865	NC	NC	NC	NC
2° 15'	2,546				
2° 45'	2,083				NC
3° 00'	1,910				RC
3° 45'	1,528			NC	
4° 00'	1,432			RC	
4° 45'	1,206				
5° 00'	1,146		NC		
5° 15'	1,091		RC		
5° 30'	1,042				
5° 45'	996				
6° 00'	955				RC
6° 15'	917				0.022
6° 30'	881				0.024
6° 45'	849				0.027
7° 00'	819	NC			0.030
7° 15'	790	RC			0.033
7° 30'	764				0.037
7° 45'	739				0.041
8° 00'	716			RC	0.045
8° 15'	694			0.022	0.050
8° 30'	674			0.025	D_{max} = 8° 15'
8° 45'	655			0.027	
9° 00'	637			0.030	
9° 30'	603			0.034	
10° 00'	573			0.040	
10° 30'	546		RC	0.047	
11° 00'	521		0.023	D_{max} = 10° 45'	
11° 30'	498		0.026		
12° 00'	477		0.030		
13° 00'	441		0.036		
14° 00'	409	RC	0.045		
15° 00'	382	0.023	D_{max} = 14° 15'		
16° 00'	358	0.027			
17° 00'	337	0.032			
18° 00'	318	0.038			
19° 00'	302	0.043			
20° 00'	286	0.050			
		D_{max} = 20° 00'			

Notes:
(1) NC = Normal Crown (-0.02), RC = Reverse Crown (+0.02)
(2) Rates for intermediate D's and R's are to be interpolated.
(3) Design speeds of 25 mph are to be designed as 30 mph.

Table 210.9.3 Superelevation Transition Slope Rates

# Lanes One Direction	Superelevation Transition Slope Rates						
	e_{max} = 0.10				e_{max} = 0.05		
	Design Speed (mph)				Design Speed (mph)		
	25-40	45-50	55-60	65-70	25-35	40	45
1-Lane & 2-Lane	1:175	1:200	1:225	1:250	1:100	1:125	1:150
3-Lane	---	1:160	1:180	1:200			
4-Lane or more	---	1:150	1:170	1:190			

Notes:

e_{max} = 0.10:

(1) The length of superelevation transition is to be determined by the relative slope rate between the travel way edge of pavement and the profile grade, except that the minimum length of transition is 100 feet.

(2) For additional information on transitions, see the ***Standard Plans***, ***Index 000-510***.

e_{max} = 0.05:

(1) The length of superelevation transition is to be determined by the relative slope rate between the travel way edge of pavement and the profile grade, except that the minimum length of transition is 50 feet for design speeds 25-35 mph and 75 feet for design speeds 40-45 mph.

(2) A slope rate of 1:125 may be used for 45 mph under restricted conditions.

(3) For additional information on transitions, see the ***Standard Plans***, ***Index 000-511***.

210.10 Vertical Alignment

The profile grade line defines the vertical alignment for roadway and bridge construction. The profile grade line is a series of tangents connected by vertical curves. For undivided highways the profile grade line is typically located at the horizontal centerline of the roadway. For divided highways a profile grade line should be established for each direction of travel.

Vertical alignments must meet criteria in the ***FDM*** to assure proper transitions, sight distances, and clearances.

210.10.1 Grades

The slope or grade of each tangent is expressed in percent rise (+) or fall (-); e.g., +2.000% or -2.000%. The maximum grades that may be used in establishing the vertical alignment is given in ***Table 210.10.1***.

Table 210.10.1 Maximum Grades

Context Classification	Maximum Grades (percent)								
	Design Speed (mph)								
	25-30	35	40	45	50	55	60	65	70
C1 Natural C2 Rural	N/A	N/A	N/A	N/A	4	4	3	3	3
C2T Rural Town C3 Suburban C4 Urban General	8	7	7	6	6	5	N/A	N/A	N/A
C5 Urban Center C6 Urban Core	8	8	N/A	N/A	N/A	N/A	N/A	N/A	N/A

Notes:

(1) Maximum grade used should not exceed 4% when truck volume ≥ 10% for all context classifications.

(2) For RRR projects, when existing grades do not meet the above requirements but meet the standards in effect at the time of construction, the existing grade may remain.

The point where tangents intersect is known as the vertical point of intersection (VPI). When two tangent grades intersect and no vertical curve is provided, the “kink” is known as the point of intersect (PI). The maximum change in grade (i.e., algebraic change) without a vertical curve is provided in ***Table 210.10.2***.

Table 210.10.2 Maximum Change in Grade without Vertical Curve

Maximum Change In Grade Without Vertical Curve (percent)								
Design Speed (mph)								
25-30	35	40	45	50	55	60	65	70
1.00	0.90	0.80	0.70	0.60	0.50	0.40	0.30	0.20

210.10.1.1 Curbed Roadway

The minimum distance between VPIs on curbed roadways is 250 feet. The minimum grade on curbed roadways is 0.30%.

210.10.2 Vertical Curves

A vertical curve must be provided when the change in grade of two intersecting tangent grades exceed the values shown in ***Table 210.10.2***. A vertical curve is identified by a curve length (L) which is equal to the product of the K value (K) and the algebraic difference in grades (A).

Table 210.10.3 provides minimum K-Values, and ***Table 210.10.4*** provides minimum vertical curve lengths.

Table 210.10.3 K Values for Vertical Curves

	Minimum K Values For Curves									
	Design Speed (mph)									
	25	30	35	40	45	50	55	60	65	70
Sag	26	37	49	64	79	96	115	136	157	181
Crest (new const.)	19	31	47	70	98	136	185	245	313	401
Crest (RRR Criteria)	12	19	29	44	61	84	114	151	193	247

Notes:

Length, L = KA

Where: K = Rate of vertical curvature

L = Length of vertical curve, (feet)

A = Algebraic difference in grades, (percent)

(1) New Construction K values are based on an eye height of 3.5 feet and an object height of 6 inches. RRR Criteria K values are based on an eye height of 3.5 feet and an object height of 2 feet.

(2) The minimum curve length must not be less than values shown in ***Table 210.10.4***.

Table 210.10.4 Minimum Vertical Curve Lengths

	Minimum Curve Length (feet)									
	Design Speed (mph)									
	25	30	35	40	45	50	55	60	65	70
Sag	75	90	105	120	135	200	250	300	350	400
Crest						300	350	400	450	500

210.10.2.1 RRR Criteria for Vertical Curves

Table 210.10.3 provides RRR Criteria K values to be used to check the sufficiency of existing crest vertical curves. ***2011 AASHTO Green Book*** revised its K values to reflect a 2-foot object height; FDOT has not adopted this change for new construction but these K values can be used to check existing curves. An existing crest vertical curve that does not meet the minimum RRR Criteria K value requires a Design Exception or Design Variation to remain.

When crash data indicates that an evaluation is required, consider the following:

(1) The nature of potential hazards hidden by a hill crest.

(2) The location of the hazard in relation to the portion of the highway where sight distance falls below new construction criteria.

(3) Effectiveness of other options such as relocating or correcting the hazard.

(4) Providing warning signs.

Sag vertical curves do not typically pose stopping sight distance problems. A sag vertical curve that does not meet the minimum K value in ***Table 210.10.3*** and does not have a crash history, does not require a Design Exception or Design Variation to remain.

210.10.3 Vertical Clearances

Consider the following vertical clearance requirements when developing the vertical alignment:

(1) Minimum clearances for bridge structures is given in ***FDM 260.6***.

(2) Minimum clearance from the bottom of the roadway base course to the Base Clearance Water Elevation is 3 feet, except as noted below. A clearance less than 3 feet requires a reduction in the design resilient modulus in accordance with the ***Flexible Pavement Design Manual***. Coordinate with the Pavement Design Engineer for the following facilities:

   (a) 2-lane roadways in context classification C1, C2, C2T and C3, and all ramps may be reduced to a 2-foot clearance.

   (b) Low point on ramps at cross roads may be reduced to a 1-foot clearance.

   (c) All other facilities in context classifications C4 through C6 may be reduced to a 1-foot clearance.

(3) The relationship between the pavement elevation and the Design Flood Elevation is discussed in ***Section 4.4 (3)*** of the ***FDOT Drainage Manual (Topic No. 625-040-002)***.

(4) The ***Drainage Manual, Appendix C*** lists minimum covers and maximum fill heights for all types of culverts.

(5) For utility clearances, refer to the ***Utility Accommodation Manual***.

(6) The required clearance for new overhead sign structures is 17.5 feet. This clearance is the least distance measured between the lowest point on the sign structure and the traffic lane or shoulder directly below the sign structure. For construction affecting existing overhead sign clearances, the minimum vertical clearance is 17 feet.

(7) The required clearance for new walk-in Dynamic Message Sign (DMS) structures is 19.5 feet. This clearance is the least distance measured between the lowest point on the DMS structure and the traffic lane or shoulder directly below the DMS structure. For any construction affecting existing DMS, the minimum vertical clearance is 19 feet.

(8) The required clearance for new signals on span wires, mast arms, or other structures is 17.5 feet. This clearance is the least distance measured between the lowest point on the signal structure and the traffic lane or shoulder directly below the signal structure. For any construction affecting existing signal clearances, FDOT minimum vertical clearance is 17 feet. Vertical clearances between 15 feet and 17 feet require a Design Variation. Signal clearances less than 15 feet are not allowed.

210.10.4 RRR Criteria for Vertical Alignment

Vertical alignment must be reviewed together with the horizontal alignment to assure that the necessary balance of standards is realized and that the combination is both safe and pleasing.

The alignment should be reviewed to see if the following principles are satisfied by the existing vertical alignment:

(1) The stopping sight distance provided meets or exceeds the values in ***Table 210.11.1***.

(2) Grades do not significantly affect truck operations.

(3) There are no hidden dips which could obscure traffic or hazards.

(4) Steep grades and sharp vertical curves do not exist at or near an intersection.

(5) Sufficient grades and, when necessary, special gutter grades exist to adequately drain urban projects.

(6) Adequate sight distance exists for traffic signals (e.g., beyond overpasses, etc.).

When any of the above conditions do not exist, evaluate for hazardous conditions and determine if corrective measures are warranted.

210.11 Sight Distance

The AASHTO publication, ***A Policy on Geometric Design of Highways and Streets***, has a thorough discussion on sight distance. Three aspects of sight distances should be considered:

(1) Sight distances needed for stopping, which are applicable on all highways

(2) Sight distances needed for the passing of overtaken vehicles, applicable only on two-lane highways

(3) Sight distances needed for decisions at complex locations

210.11.1 Stopping Sight Distance

Stopping sight distance is defined as the distance needed for drivers to see an object on the roadway ahead and bring their vehicles to safe stop before colliding with the object. The distances are derived for various design speeds based on assumptions for driver reaction time, the braking ability of most vehicles under wet pavement conditions, and the friction provided by most pavement surfaces.

Stopping sight distance is influenced by both vertical and horizontal alignment. A roadway designed to criteria employs a horizontal, vertical alignment, and a cross section that provides at least the minimum stopping sight distance through the entire facility.

Minimum stopping sight distances are provided in ***Table 210.11.1***.

Minimum stopping sight distances greater than shown in ***Table 210.11.1*** should be considered when drivers require additional time to make decisions.

Table 210.11.1 Minimum Stopping Sight Distance

Grade (percent)		Minimum Stopping Sight Distance (feet)									
		Design Speed (mph)									
		25	30	35	40	45	50	55	60	65	70
Downgrade	≤ 2	155	200	250	305	360	425	495	570	645	730
	3	158	205	257	315	378	446	520	598	682	771
	4	160	208	261	320	385	454	530	610	696	788
	5	162	211	266	326	392	464	541	623	712	806
	6	165	215	271	333	400	474	553	638	728	825
	7	167	218	276	339	408	484	565	652	746	845
	8	170	222	281	346	417	495	579	669	765	867
	9	173	227	287	354	427	507	593	686	785	891
Upgrade	≤ 2	155	200	250	305	360	425	495	570	645	730
	3	147	190	237	289	344	405	469	538	612	690
	4	146	188	234	285	339	399	462	530	602	678
	5	144	186	231	281	335	393	456	522	593	668
	6	143	184	229	278	331	388	450	515	584	658
	7	142	182	226	275	327	383	443	508	576	648
	8	141	180	224	272	323	379	438	501	568	639
	9	139	179	222	269	320	375	433	495	561	631

210.11.2 Passing Sight Distance

Passing sight distance is the minimum distance that would enable a vehicle to pass another vehicle without interfering with oncoming vehicles traveling at the design speed. The minimum passing sight distance is sufficient only for the passing of a single or isolated vehicle.

Minimum passing sight distances for 2-lane, 2-way roadways are provided in ***Table 210.11.2***. Values shown in this table are based on eye height of 3.5 feet and an object height of 3.5 feet.

Table 210.11.2 Minimum Passing Sight Distance

Minimum Passing Sight Distance For 2-Lane, 2-Way Roadways (feet)									
Design Speed (mph)									
25	30	35	40	45	50	55	60	65	70
900	1090	1280	1470	1625	1835	1985	2135	2285	2480

Minimum passing sight distances provided in ***Table 210.11.2*** are for geometric design, and are different from values found in the ***Manual on Uniform Traffic Studies*** (***MUTS***). The values shown in the ***MUTS*** are used as the warrants for placing no-passing zone pavement markings. The ***MUTS*** values are based on traffic operating-control needs, which are based on different assumptions from those for highway design.

210.11.3 Intersections

Information on sight distance at intersections is contained in ***FDM 212***.