NOTES:

1. Critical Root Zone: Extends in all directions from trunk of tree to a distance equal to one foot per inch of trunk diameter at breast height.
2. Staging, storage, dumping, washing and operation of equipment is not permitted within the limits of the tree protection barrier, including during barrier installation.
3. Install all tree protection prior to commencement of construction and remove when directed by the Engineer. Maintain protection at all times.
4. For closely spaced groups of trees, place the tree protection barrier around the entire group.
5. Inspect trunk protection and tree quarterly to prevent girdling. Adjust bands to allow tree growth as needed.
6. See plans for any additional requirements or modifications within the tree protection area.
7. Place weather resistant sign every 50' along the barrier, with 6" minimum text height and provide text in English and Spanish. Sign should read " Keep Out Tree Protection Area".
8. Alternate tree protection systems approved by the Engineer may be used in lieu of the tree protection barrier detailed on this Index as long as the critical root zone is protected.
9. The Critical Root Zone may be reduced, in the field, by a certified Arborist or Landscape Architect.

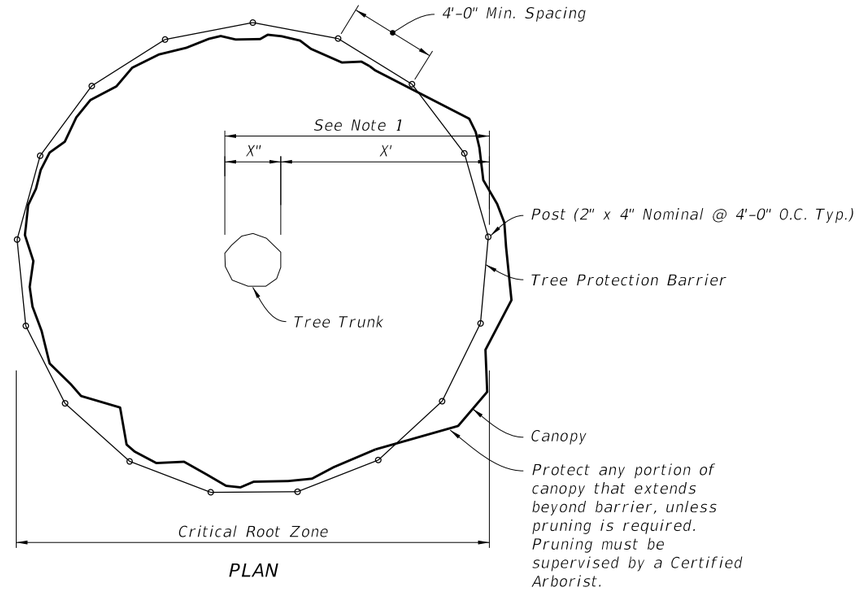

PLAN

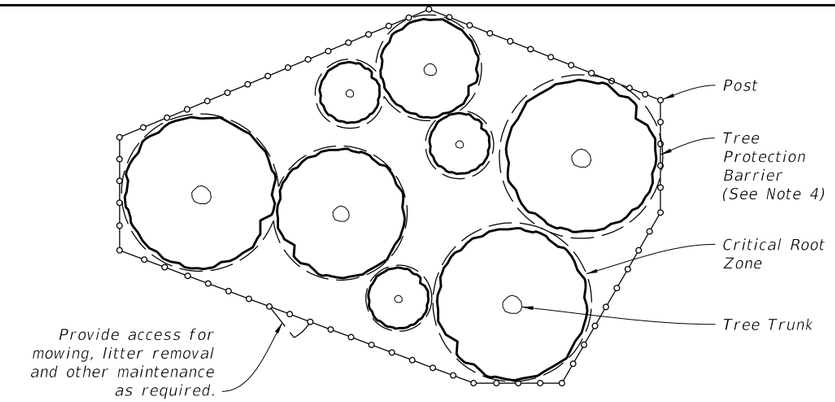

PLAN

PROTECTION BARRIER FOR TREE GROUPINGS

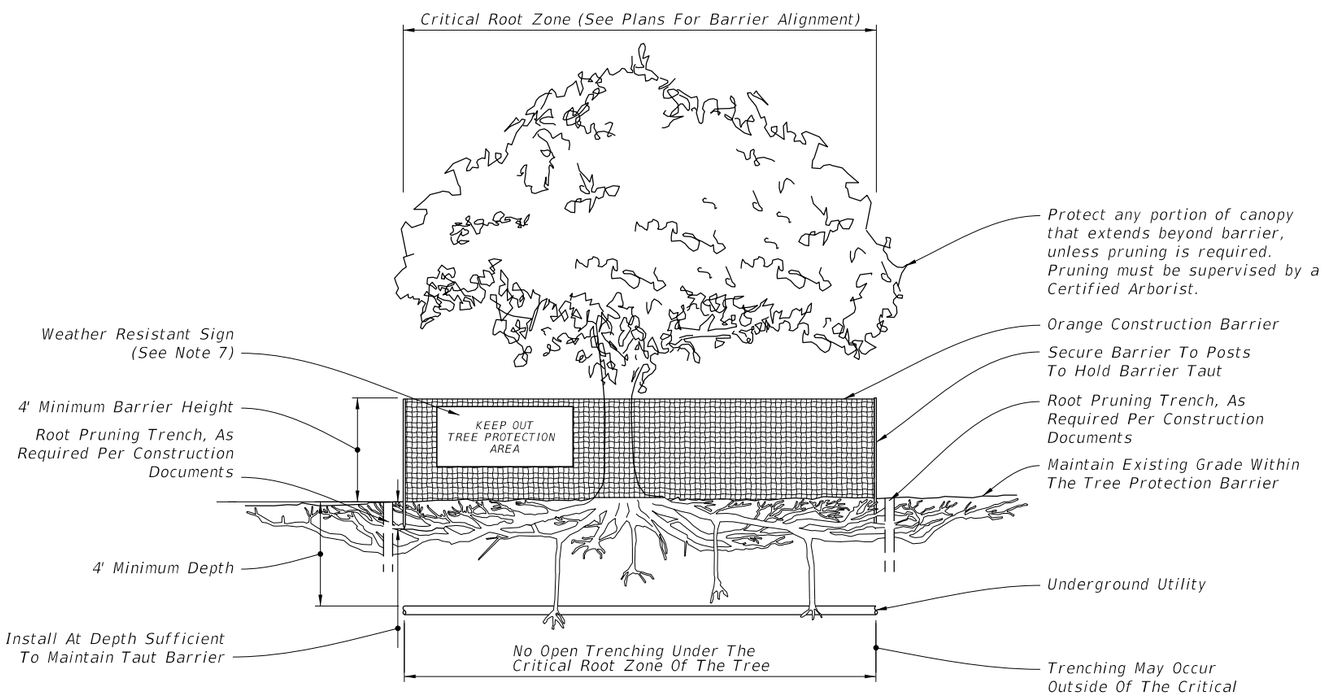

ELEVATION

TREE PROTECTION BARRIER

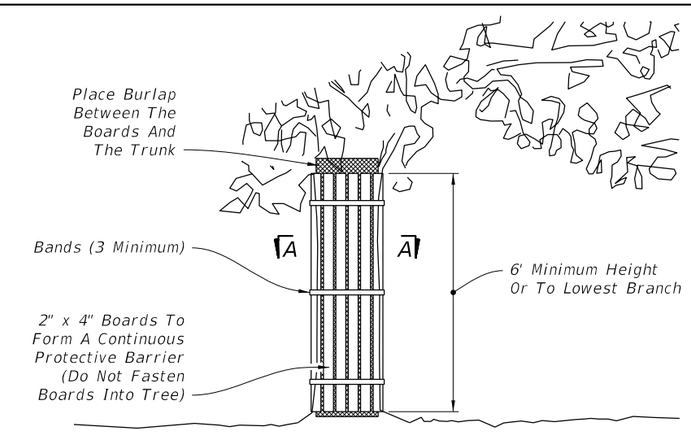

ELEVATION

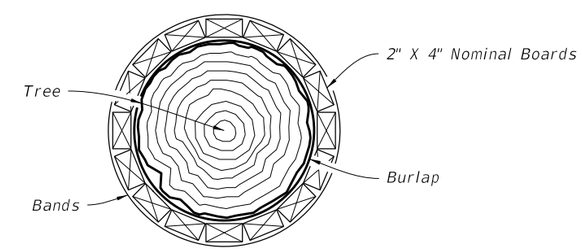

SECTION A-A

NOTES:

1. Trunk protection may be used when Tree Protection Barrier can not be reasonably erected, when approved by Engineer.
2. See Selective Clearing and Grubbing Plan for location of trunk protection, when applicable.
3. Adjust bands to allow tree growth (inspect quarterly to prevent girdling).

TRUNK PROTECTION

10/25/2018 8:48:38 AM

LAST REVISION	REVISION	DESCRIPTION:			INDEX	SHEET
11/01/18			FDOT FY 2019-20 STANDARD PLANS	TREE PROTECTION AND PRESERVATION	110-100	1 of 1

GENERAL NOTES

1. The location and construction of mailboxes shall conform to the rules and regulations of the United States Postal Service as modified by this Index.

2. Mailboxes will not be permitted on Interstate highways, freeways, or other highways where prohibited by law or regulation.

3. The contractor shall give the Postmaster of the delivery route(s) written notice of project construction 7 days prior to the beginning of work, with Saturdays, Sundays and Holidays excluded.

   The Contractor shall furnish and install one mailbox in accordance with this Index at each mail patron delivery location and maintain the box throughout the contract period. The Contractor shall apply box numbers to each patron box in accordance with identification specifications of the Domestics Mail Manual of the U. S. Postal Service; where local street names and house numbers are authorized by the Postmaster as a postal address, the Contractor shall inscribe the house number on the box; if the box is located on a different street from the patrons residence, the Contractor shall inscribe the street name and house number on the box.

   The Contractor shall coordinate removal of the patrons existing mailboxes. Immediately after installing the new mailboxes the Contractor must notify each "Mail Delivery Patron" by Certified Mail that removal of the existing mailboxes must be accomplished in 21 days after receipt of notices. Patrons shall have the option of removing their existing mailboxes or leaving the mailboxes in place for removal by the Contractor; removal by the Contractor shall be included in the contract unit price for Mailbox, Each. The Contractor shall dispose of mailboxes and supports in areas provided by him.

   Reuse of existing mailboxes by the Contractor will not be a requirement under any construction project; however where an existing mailbox meets the design requirements of this Index and is structurally and functionally sound, the Contractor at his option may elect to reuse the existing mailbox in lieu of constructing a new mailbox. Any use of existing mailboxes must be approved by the Engineer.

4. Mailboxes shall be light sheet metal or plastic construction, in traditional style only, and only in Size 1 as prescribed by the Domestic Mail Manual of the U. S. Postal Service (DMM).

   Mailbox production standards, lists of approved manufacturers and suppliers of mailboxes, design approval and guidance may be obtained by writing to the Rural Delivery Division, Delivery Service Department, Operations Group, USPS Headquarters, Washington, DC 20260.

5. Mailboxes shall be located on the right-hand side of the roadway in the direction of the delivery route, except on one-way roads and streets where they may be placed on the left-hand side.

   Mailboxes on rural highways shall be set with the roadside face of the box offset from the edge of the traveled way a minimum distance of the greater of the following:

   a. Shoulder width plus 8" to 12".

   b. 10' for ADT over 10,000 vpd.
      8' for ADT 100 to 10,000 vpd.
      6' for ADT under 100 vpd
      2'-6" for low speed and ADT under 100 vpd.

   When a mailbox is installed within the limits of guardrail it should be placed behind the guardrail whenever practical.

   Mailboxes on curbed highways, roads, and streets shall be set with the face of the box between 6" and 12" behind the face of curb. If the sidewalk abuts the curb or if an unusual condition exists which makes it difficult or impractical to install or serve boxes at the curb, the Contractor, with concurrence of the local postal authority, may be permitted to install all mailboxes at the back edge of the sidewalk, where they can be served by the carrier from the sidewalk.

6. Mailboxes shall be set with the bottom of the box between 42" and 48" above the mail stop surface, unless the U.S. Postal Service establishes other height restrictions.

7. No more than two mailboxes may be mounted on a support structure unless the support structure and mailbox arrangements have been shown to be safe by crash testing in accordance with NCHRP Report 350.

   Neighborhood Delivery and Collection Box Units (NDCBU) are a specialized multiple mailbox installation that must be located outside the highway and street clear zones. The location of NDCBUs is the sole responsibility of the Postmaster for the delivery route under consideration.

8. Lightweight newspaper receptacles may be mounted below the mailbox on the side of the support post in conformance with the USPS Domestic Mail Manual. The mail patron shall be responsible for newspaper receptacle installation and maintenance.

9. Wood and steel support posts for both single and double mailbox mountings shall be embedded no more than 24" into the ground.

   Concrete, block, brick, stone or other rigid foundation structure or encasement, either above or below the shoulder ground line, will not be permitted for mailboxes on rural highways. On urban roads and streets where mailbox support posts are set within rigid pavement back of curb, the support posts shall be separated from the pavement by a minimum of 1" of expansion material.

   Support posts shall not be fitted nor installed with surface mount base plates.

10. At driveway entrances mailboxes shall be placed on the far side of the driveway in the direction of the delivery route.

    At intersecting roads mailboxes shall be located 100' or more from the centerline of the intersecting road on the far side in the direction of the delivery route, with the distance increased to 200' when the route volume exceeds 400 vehicles per day.

11. Wood support posts shall be in conformance with the material and dimensional requirements of Section 952 and the treatment requirements of Section 955 of the Standard Specifications.

    Steel support posts shall have an external finish equal to or better than two coats of weather resistant, air dried or baked, paint or enamel. Surface(s) shall be cleaned of all loose scale prior to finishing. The Postal Service prefers that posts be painted white, but other colors may be used when approved by the Engineer. When galvanized posts are used painting is not required.

    Mounting brackets, plates, platforms, shelves and accessory hardware surface finishes are to be suited to support post finish.

12. Mailboxes shall be paid for under the contract unit price for Mailboxes, Each. Payment shall be full compensation for boxes, posts and accessory items essential for installation in accordance with this standard; erection; adjustments to suit construction needs; and, for identification letters and numbers.

    Payment shall be limited to one mailbox per patron address whether the mailbox is new, reused, salvaged, reset or relocated. Payment shall be per mailbox regardless of the number of mailboxes per support or grouping arrangement.

    The above compensation shall include any work and cost incurred by the contractor for removal and disposal of existing mailboxes.

    There shall be no payment participation for NDCBU furnishing, assembly, installation, resetting or relocation.

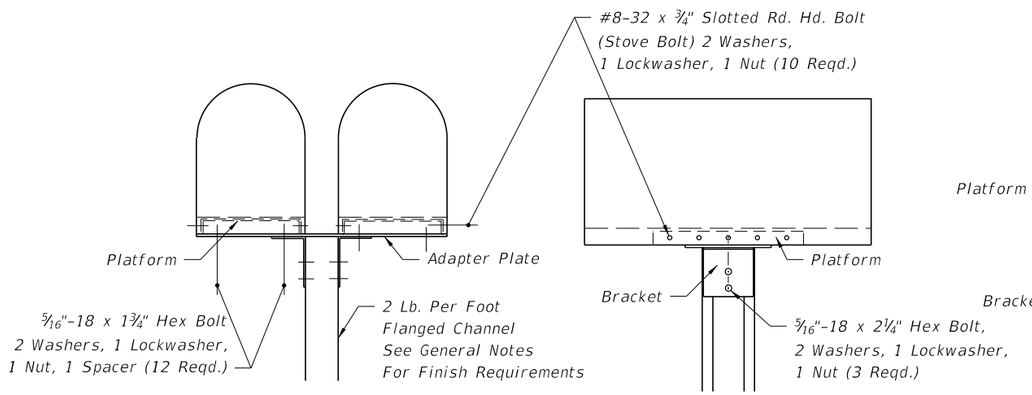

FRONT VIEW

SIDE VIEW

FLANGED CHANNEL

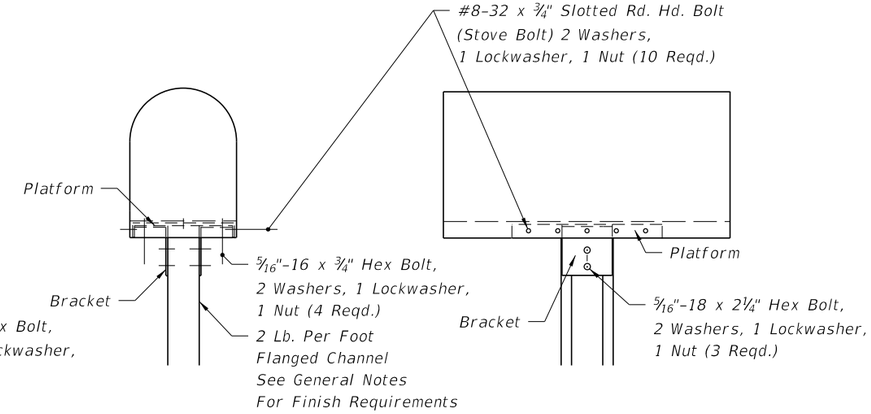

FRONT VIEW

SIDE VIEW

FLANGED CHANNEL

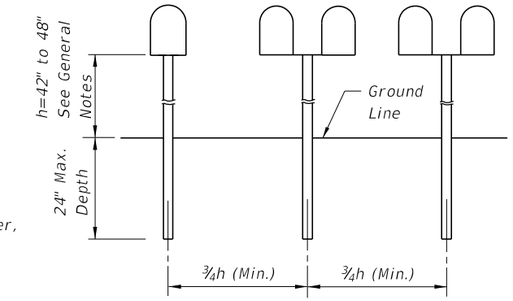

ELEVATION

SINGLE OR COMBINED WOOD, FLANGED CHANNEL
OR PIPE POST TYPES SHOWN ON THIS INDEX

POST SPACING

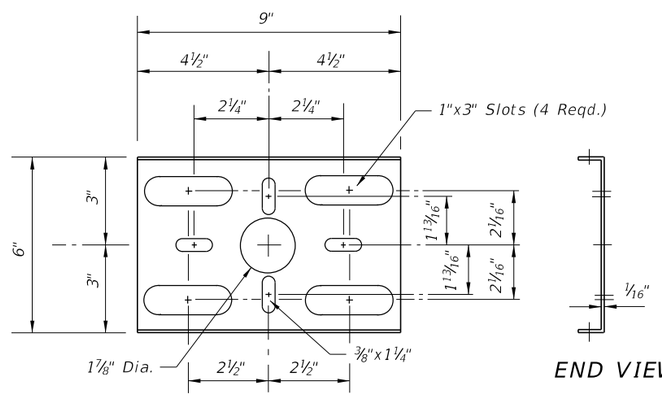

END VIEW

BOTTOM VIEW

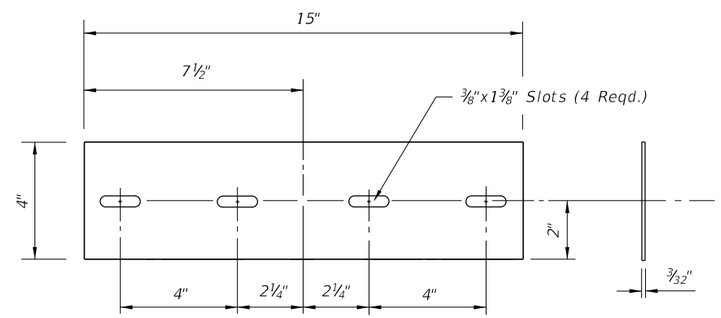

TOP VIEW

END VIEW

STEEL ADAPTER PLATE

Note: See General Notes for finish requirements.

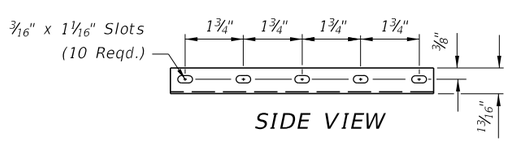

SIDE VIEW

STEEL PLATFORM

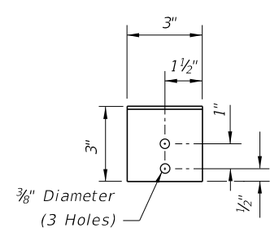

FRONT VIEW

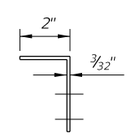

END VIEW

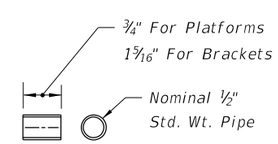

STEEL SPACER

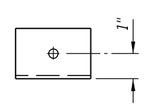

TOP VIEW

STEEL BRACKET

STEEL FLANGED CHANNEL SUPPORT POSTS

10/25/2018 8:48:41 AM

LAST REVISION	REVISION	DESCRIPTION:			INDEX	SHEET
11/01/17			FDOT FY 2019-20 STANDARD PLANS	MAILBOXES	110-200	2 of 3

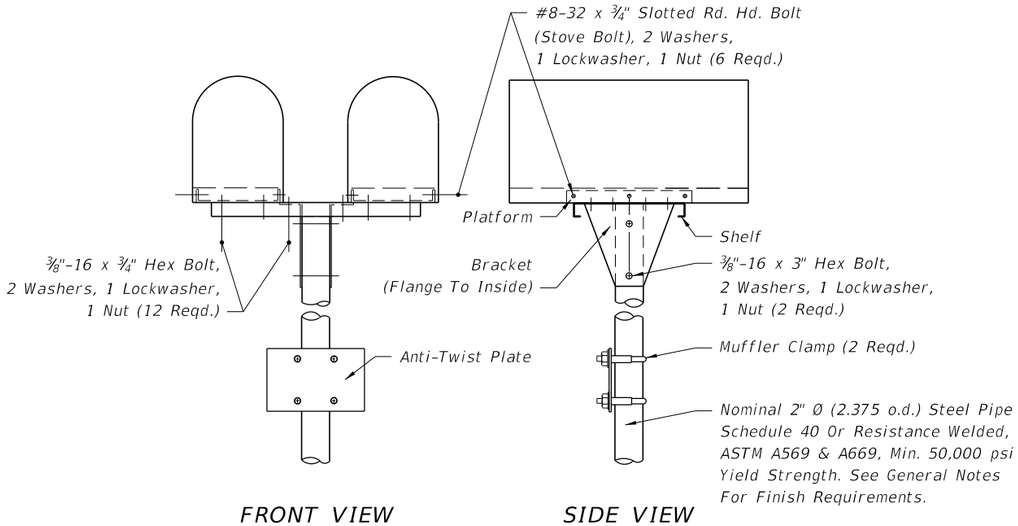

FRONT VIEW SIDE VIEW

2" Ø PIPE POST

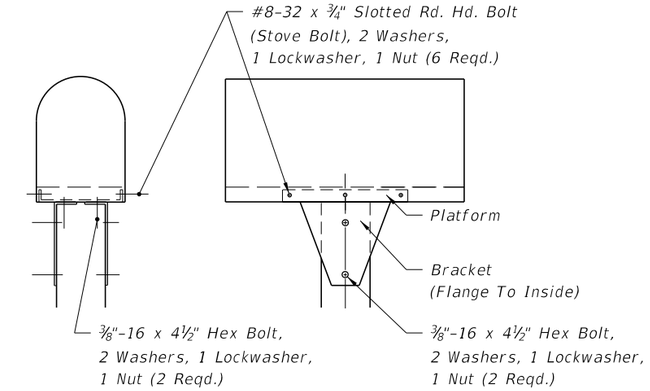

FRONT VIEW SIDE VIEW

4" X 4" WOOD POST

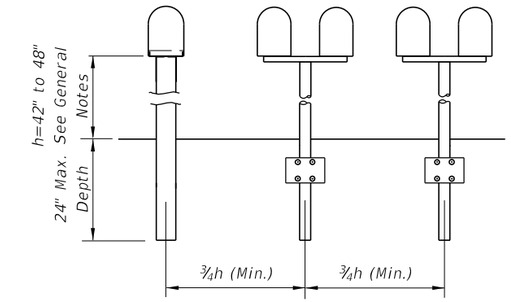

SINGLE OR COMBINED WOOD, FLANGED CHANNEL OR PIPE POST TYPES SHOWN ON THIS INDEX

ELEVATION

POST SPACING

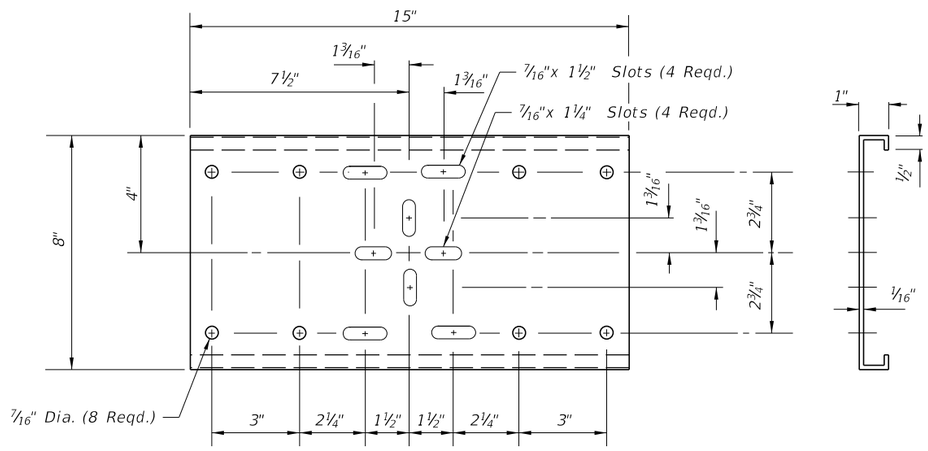

TOP VIEW END VIEW

STEEL SHELF

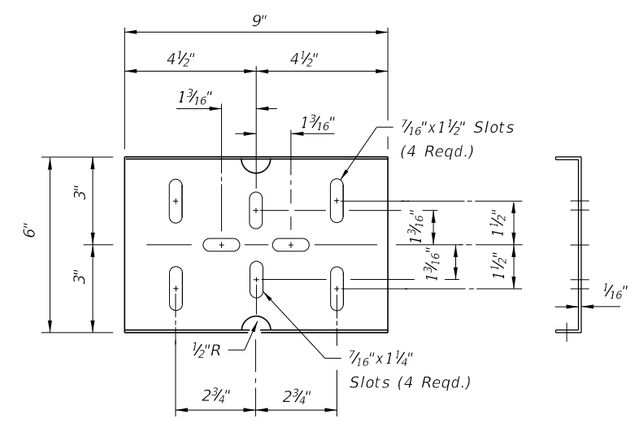

BOTTOM VIEW END VIEW

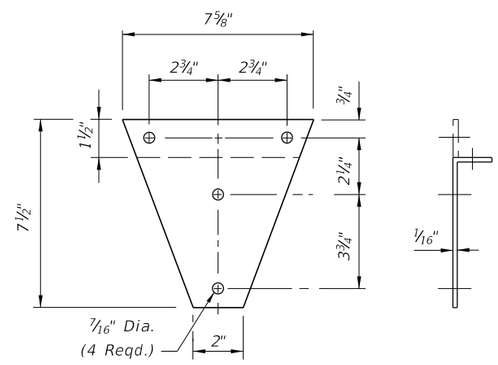

SIDE VIEW END VIEW

STEEL BRACKET

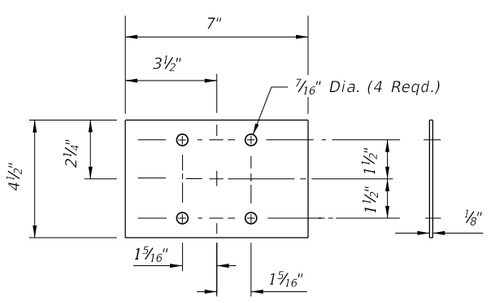

FRONT VIEW END VIEW

STEEL ANTI-TWIST PLATE

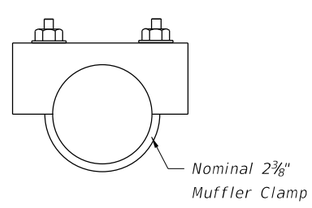

TOP VIEW

STEEL CLAMP

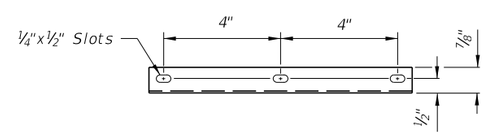

SIDE VIEW

STEEL PLATFORM

Note: See General Notes for finish requirements

STEEL PIPE AND WOOD SUPPORT POSTS

10/25/2018 8:48:42 AM

LAST REVISION	REVISION	DESCRIPTION:			INDEX	SHEET
11/01/17			FDOT FY 2019-20 STANDARD PLANS	MAILBOXES	110-200	3 of 3

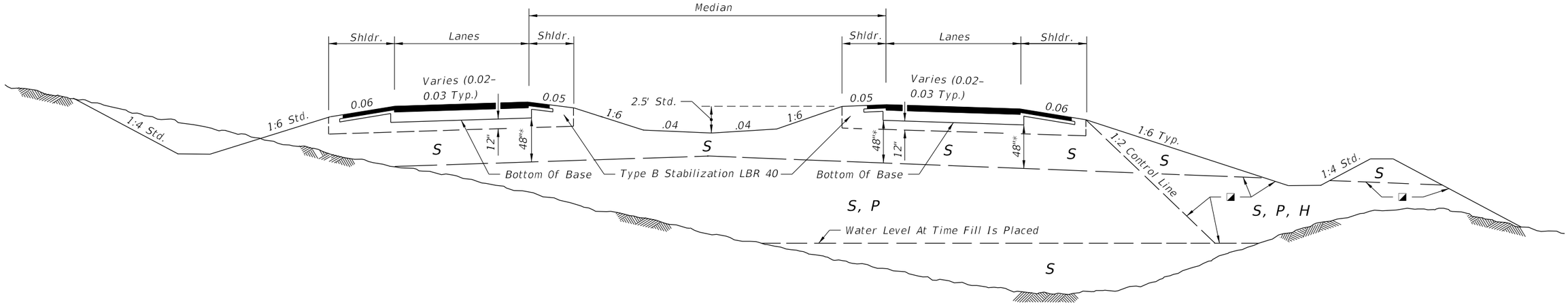

DIVIDED ROADWAYS

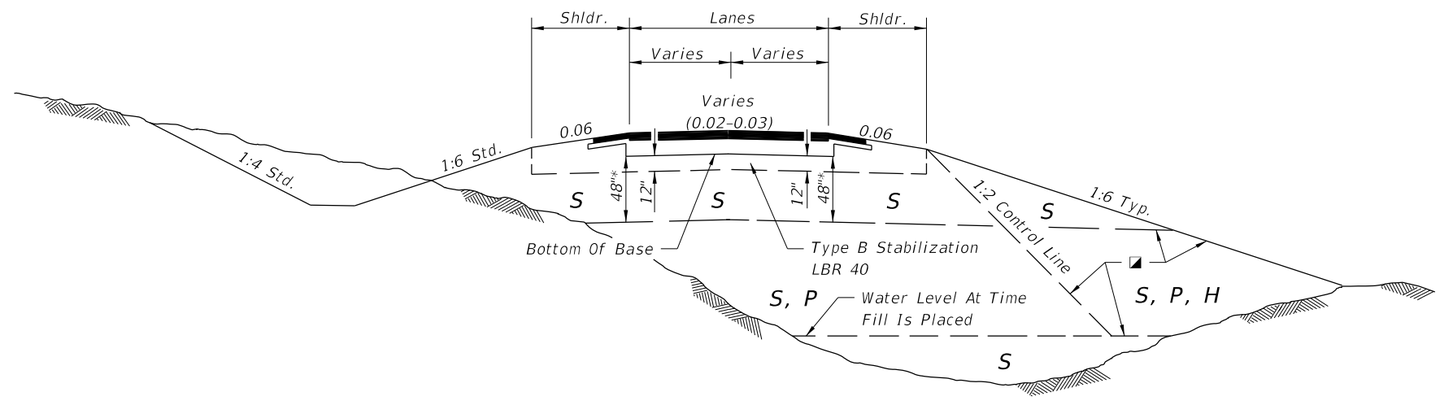

UNDIVIDED ROADWAY

GENERAL NOTES:

1. Roadway dimensions are representative. Subgrade dimensions and control lines are standard. The details shown on this Index do not supersede the details shown in the Plans or Indexes 120-002 and 160-001.

2. Plastic (P) soils may be placed above the existing water level (at the time of construction) to within 4 feet of the proposed base. It should be placed uniformly in the lower portion of the embankment for some distance along the project rather than full depth for short distances.

3. High Plastic (H) soils excavated within the project limits may be used in embankment construction as indicated on this Index. High Plastic soils are not to be used for embankment construction when obtained from outside the project limits.

4. Select (S) soils having an average organic content of more than two and one-half (2.5) percent, or having an individual test value which exceeds four (4) percent, are not permitted in the subgrade portion of the roadbed. Select (S), Plastic (P), or High Plastic (H) soils having an average organic content of more than five (5) percent, or an organic content individual test result which exceeds seven (7) percent, are not permitted in the portion of embankment inside the control line, unless written authorization is provided by the District Geotechnical Engineer; these soils may be used for embankment construction outside the control line, unless restricted by the Plans or otherwise specified in the Plans, provided they can be compacted sufficiently to sustain a drivable surface for operational vehicles as approved by the Engineer. Determine average organic content from the test results from a minimum of three randomly selected samples from each stratum or stockpile of a particular material. Perform tests in accordance with AASHTO T 267 on the portion of a sample passing the No. 4 sieve.

5. Highly organic soils, composed primarily of partially decayed organic matter, often dark brown or black in color with an odor of decay, and sometimes fibrous, are designated as muck. Further, any stratum or stockpile of soil which contains pockets of highly organic material may be designated as Muck (M). Highly organic soils are not permitted within the subgrade or embankment portion of the roadbed.

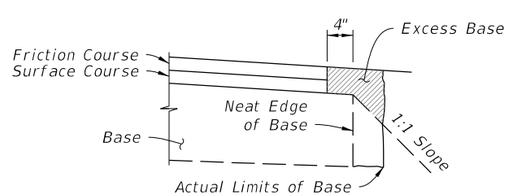

NOTES:

1. All material in the shaded area is excess base to be removed.

2. There is no additional payment for removal of excess base material.

REMOVAL OF EXCESS BASE MATERIAL

SYMBOL	SOIL	CLASSIFICATION (AASHTO M 145)
S	Select	A-1, A-3, A-2-4 **
P	Plastic	A-2-5, A-2-6, A-2-7, A-4, A-5, A-6, A-7 (ALL WITH LL < 50)
H	High Plastic	A-2-5, A-2-7, A-5 Or A-7 (ALL WITH LL > 50)
M	Muck	A-8

Classification listed left to right in order of preference.

◪ See General Notes Nos. 4 & 5 for utilization of soils classified as organic material or muck.

** Certain types of A-2-4 material are likely to retain excess moisture and may be difficult to dry and compact. They should be used in the embankment above the water level existing at time of construction. They may be used in the subgrade portion of the roadbed when approved by the District Materials Engineer. A-2-4 material placed below the existing water level must be nonplastic and contain less than 15% passing the No. 200 U.S. Standard sieve.

* For cut sections this dimension may be reduced to 24"; see Index 120-002. For minor collectors and local facilities this dimension may be reduced to 18".

GENERAL NOTES AND FLEXIBLE PAVEMENT

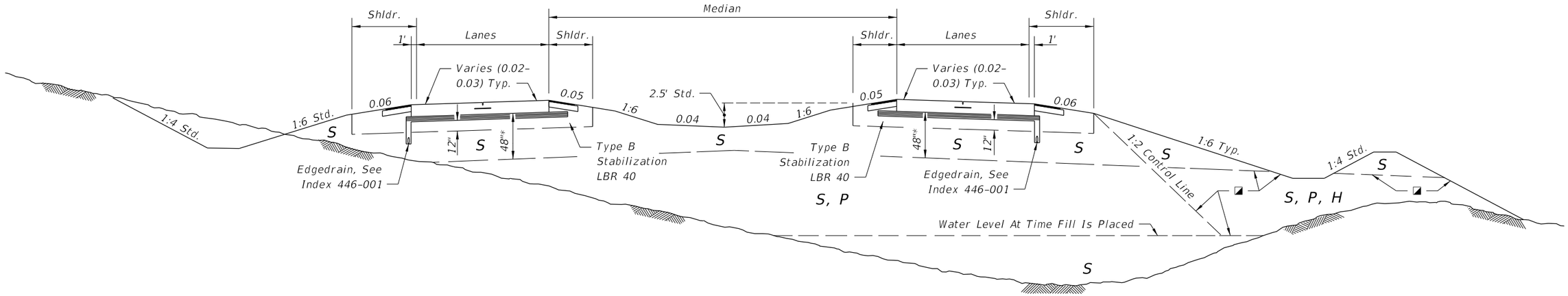

DIVIDED ROADWAYS

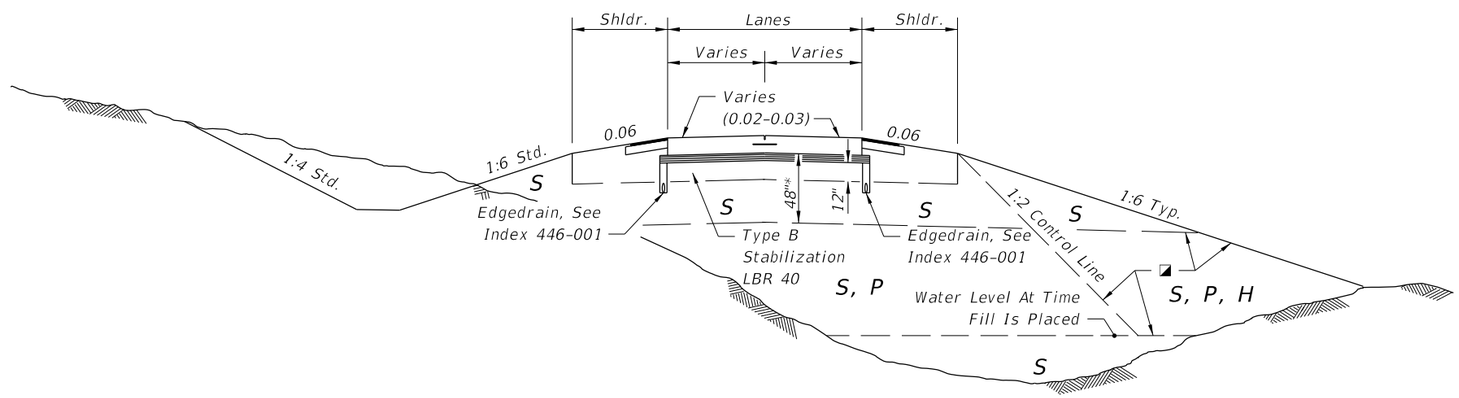

UNDIVIDED ROADWAY

SYMBOL	SOIL	CLASSIFICATION (AASHTO M 145)
S	Select	A-1, A-3, A-2-4 **
P	Plastic	A-2-5, A-2-6, A-2-7, A-4, A-5, A-6, A-7 (ALL WITH LL < 50)
H	High Plastic	A-2-5, A-2-7, A-5 Or A-7 (ALL WITH LL > 50)
M	Muck	A-8

Classification listed left to right in order of preference.

◪ See General Notes Nos. 4 & 5 for utilization of soils classified as organic material or muck.

** Certain types of A-2-4 material are likely to retain excess moisture and may be difficult to dry and compact. They should be used in the embankment above the water level existing at time of construction. They may be used in the subgrade portion of the roadbed when approved by the District Materials Engineer. A-2-4 material placed below the existing water level must be nonplastic and contain less than 15% passing the No. 200 U.S. Standard sieve.

* For cut sections this dimension may be reduced to 24"; see Index 120-002. For minor collectors and local facilities this dimension may be reduced to 18".

RIGID PAVEMENT - ASPHALT BASE OPTION

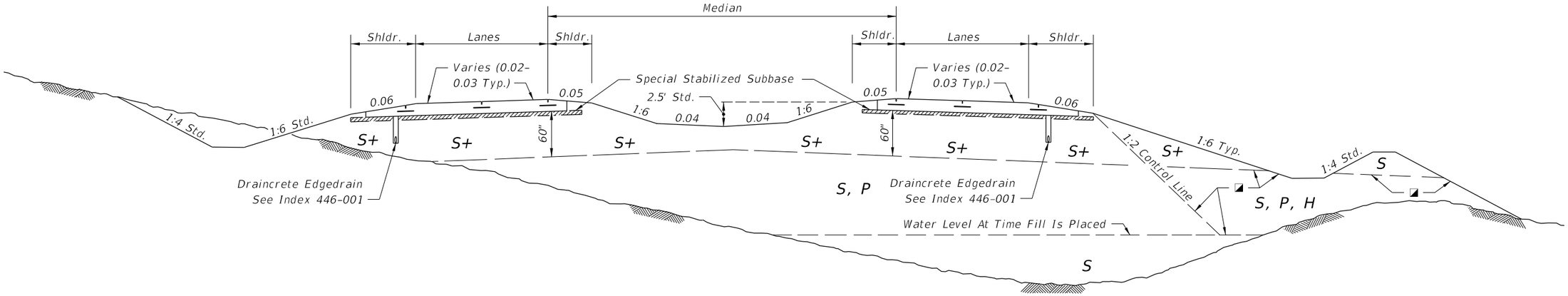

DIVIDED ROADWAYS

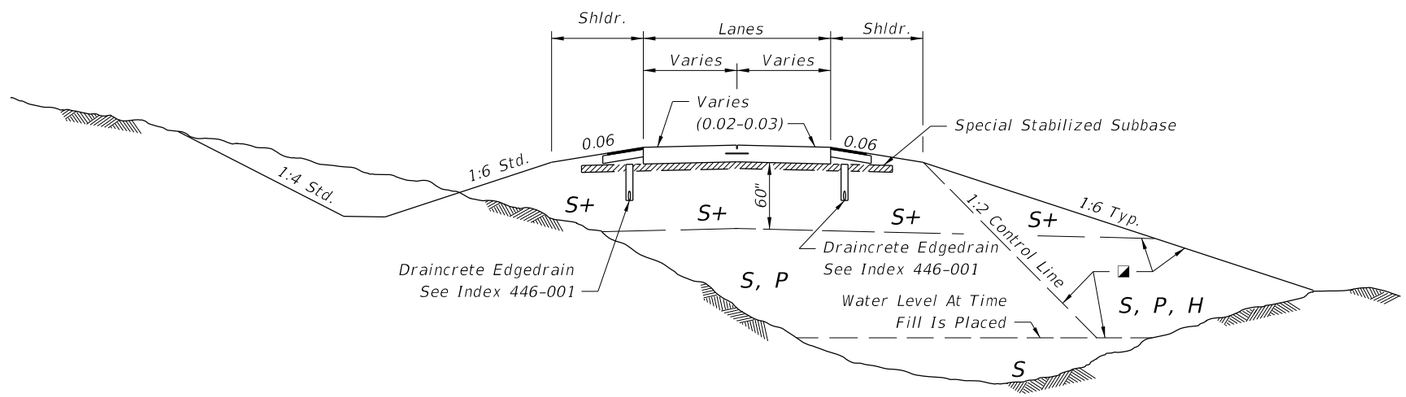

UNDIVIDED ROADWAY

SYMBOL	SOIL	CLASSIFICATION (AASHTO M 145)
S	Select	A-1, A-3, A-2-4 **
S+	Special Select	A-3 *** With Minimum Average Lab Permeability of $5x10^{-5}$ cm/sec. (0.14 ft./day) as per AASHTO T 215
P	Plastic	A-2-5, A-2-6, A-2-7, A-4, A-5, A-6, A-7 (ALL WITH LL<50)
H	High Plastic	A-2-5, A-2-7, A-5 Or A-7 (ALL WITH LL>50)
M	Muck	A-8

Classification listed left to right in order of preference.

◪ See General Notes Nos. 4 & 5 for utilization of soils classified as organic material or muck.

*** When called for in the Plans, some types of A-2-4 material may be approved in writing by the District Materials Engineer. This material must meet the minimum lab permeability requirement, be nonplastic, and not exceed 12% passing the No. 200 U.S. Standard sieve.

** Certain types of A-2-4 material are likely to retain excess moisture and may be difficult to dry and compact. They should be used in the embankment above the water level existing at time of construction. A-2-4 material placed below the existing water level must be nonplastic and contain less than 15% passing the No. 200 U.S. Standard sieve.

Special Stabilized Subbase: 3" of #57 or #89 Coarse Aggregate Mixed Into Top 6".

RIGID PAVEMENT - SPECIAL SELECT SOIL OPTION

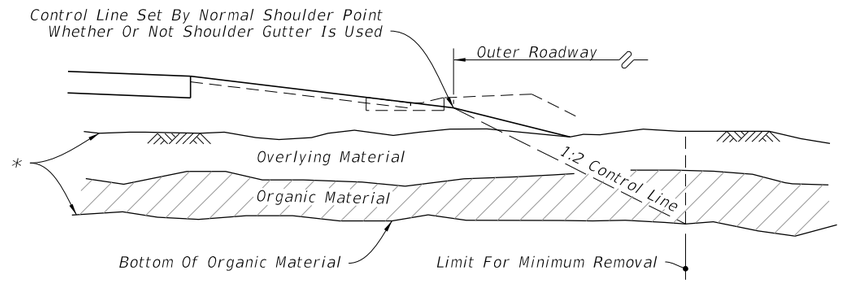

WITH OVERBURDEN - HALF SECTION

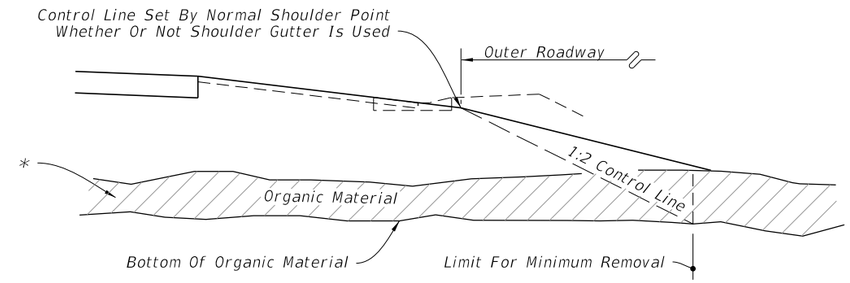

WITHOUT OVERBURDEN - HALF SECTION

CONSTRUCTION OF FLUSH SHOULDER ROADWAY

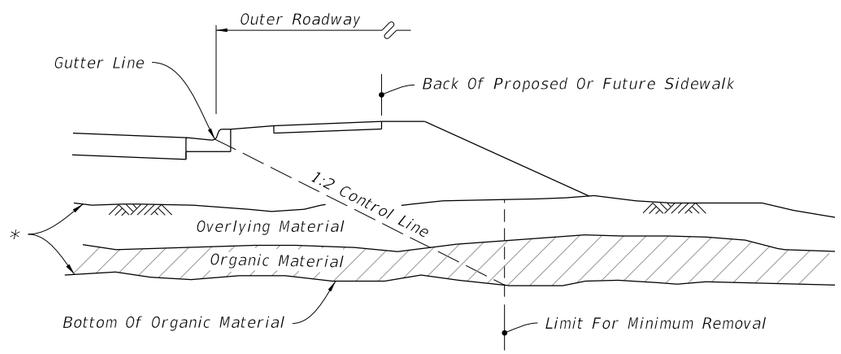

WITH OVERBURDEN - HALF SECTION

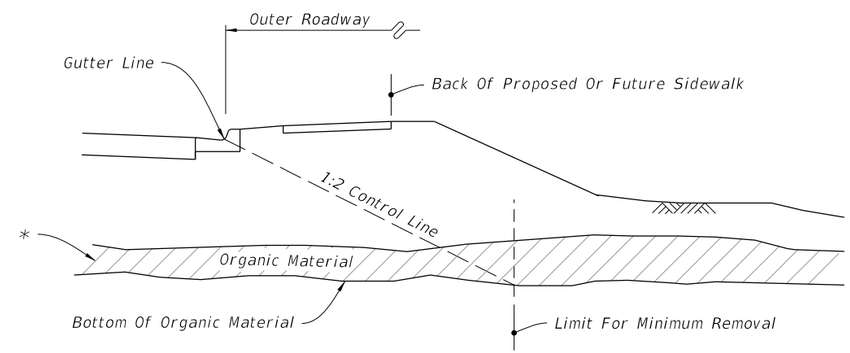

WITHOUT OVERBURDEN - HALF SECTION

CONSTRUCTION OF CURBED ROADWAY

* Remove overlying material and organic material within the limits shown and backfill in accordance with Index 120-001, unless approved otherwise by the District Geotechnical Engineer; The limits include full median width when applied to divided facilities with median widths up to 64'; When median width is greater than 64' and for bifurcated roadways the organic material removal limits will be set by a 1:2 control line complimentary to the outer roadway that will accommodate one future median lane on each roadway unless specified otherwise by the plans.

GENERAL NOTES:

1. All details shown on this Index for removal of organic and plastic materials apply unless otherwise shown on the plans.
2. Utilize excavated materials in accordance with Index 120-001.
3. Where organic or plastic material is undercut, backfill with suitable material in accordance with Index 120-001, unless otherwise shown on the plans.
4. The term "Plastic Material" used in this Index in conjunction with removal of plastic soil is as defined under soil classifications for Plastic (P) and High Plastic (H) on Index 120-001.
5. See Index 160-001 for miscellaneous earthwork details.
6. The term "Organic Material" as used on this Index is defined as any soil which has an average organic content greater than five (5.0) percent, or an individual organic content test result which exceeds seven (7.0) percent. Remove organic material as shown on this Index and the plans unless directed otherwise by the District Geotechnical Engineer. Determine the average organic content from the test results from a minimum of three randomly selected samples from each stratum. Perform tests in accordance with AASHTO T267 on the portion of a sample passing the No. 4 sieve.
7. In areas of curbed roadway, where underdrain is to be constructed beneath the proposed pavement, the grade of the underdrain filter material will not extend above the bottom of the stabilized section of the subgrade. Gradation of the filter material must conform to Standard Specifications. The minimum grade of underdrain pipe is 0.02.

GENERAL NOTES AND REMOVAL OF ORGANIC MATERIAL

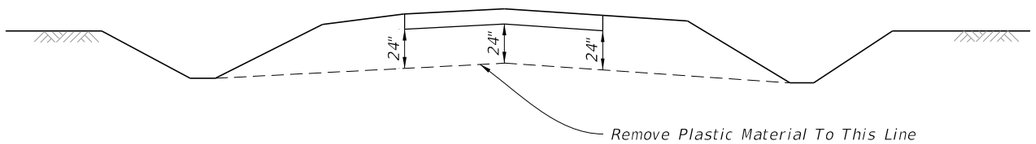

TYPICAL CUT SECTION ON TANGENT

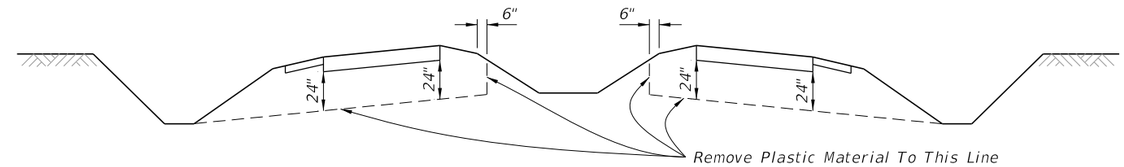

TYPICAL CUT SECTION ON TANGENT

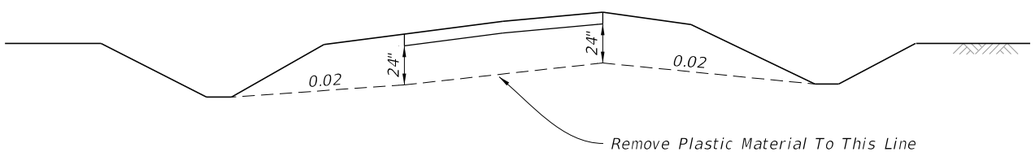

TYPICAL CUT SECTION ON SUPERELEVATION

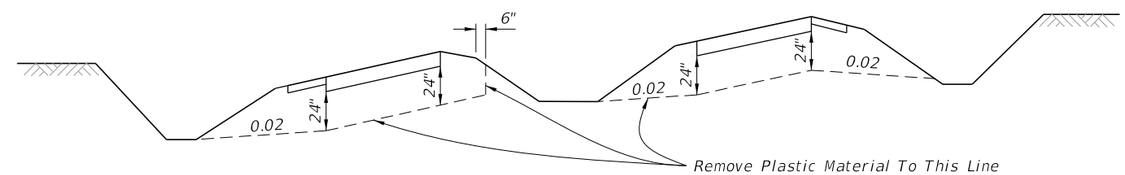

TYPICAL CUT SECTION ON SUPERELEVATION

DIVIDED FREEWAYS, ARTERIALS, MAJOR COLLECTORS HAVING FLUSH MEDIANS, ON UNDIVIDED ARTERIALS AND MAJOR COLLECTORS

INTERSTATE FACILITIES, FREEWAYS, DIVIDED ARTERIALS AND MAJOR COLLECTORS HAVING DEPRESSED MEDIANS

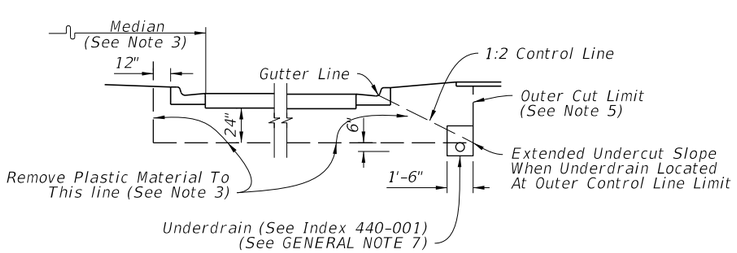

PREFERABLE REMOVAL

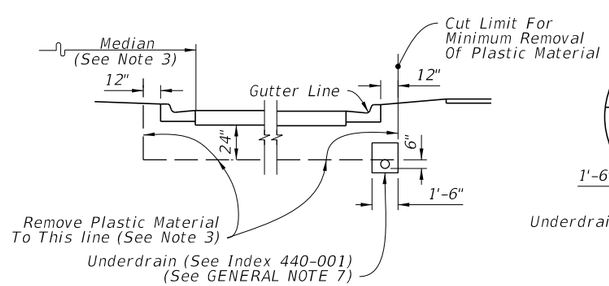

MINIMUM REMOVAL

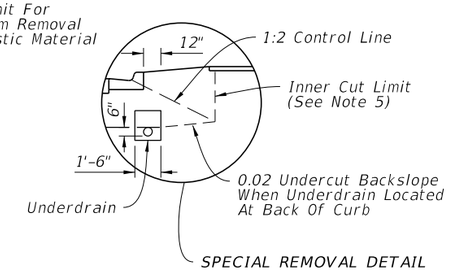

CONSTRUCTION AND LOCATION OF UNDERDRAIN IN CURBED ROADWAY

(See Note 4)

NOTES:

1. See Sheet 1 for the GENERAL NOTES.
2. When the typical cut details are applied to minor collectors and local facilities, the undercut may be reduced from 24" to 18".
3. Where frequency of median breaks indicates that it is impractical to leave plastic material in the median, the designer may elect to indicate total removal of this material. If during construction it becomes apparent, due to normal required construction procedures, that it is impractical to leave the plastic material in the median, total removal of this material shall be approved by the Engineer.
4. Refer to roadway cross sections to determine whether minimum or preferable removal is used.
5. Where the Preferable Removal method is shown in the plans and it is impossible to place the underdrain at the Outer Cut Limit due to conflict with storm drain trunk lines, remove to Inner Cut Limit and place underdrain at location shown for Minimum Removal. (See Special Removal Detail)
6. Cross slopes of 0.02 shown above are minimums. Follow the cross slope of the pavement to the extent possible.

REMOVAL OF PLASTIC MATERIAL

10/25/2018 8:48:45 AM

LAST REVISION	REVISION	DESCRIPTION:			INDEX	SHEET
11/01/17			FDOT FY 2019-20 STANDARD PLANS	SUBSOIL EXCAVATION	120-002	2 of 2

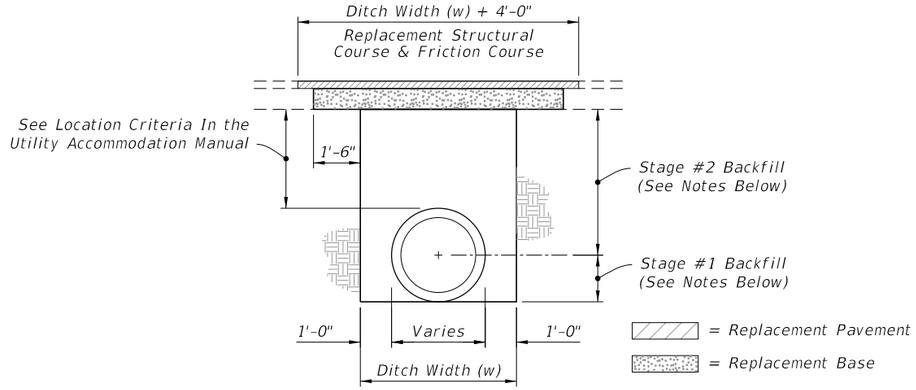

NOTES:

PAVEMENT REMOVAL AND REPLACEMENT

1. Pavement shall be mechanically sawed.
2. The replacement asphalt shall match the existing structural and friction courses for type and thickness in accordance with current FDOT asphalt mix specifications.
3. The new base materials shall be either of the same type and composition as the materials removed or of equal or greater structural adequacy.

BACKFILL OPTION

1. COMPACTED AND STABILIZED FILL

   A. Place backfill material in accordance with Specifications 125.

   B. In Stage #1, construct compacted fill beneath the haunches of the pipe, using mechanical tamps suitable for this purpose. This compaction applies to the material placed beneath the haunches of the pipe and above any bedding.

   C. In Stage #2, construct compacted fill along the sides of the pipe and up to the bottom of the base, with the upper 12" receiving Type B Stabilization. In lieu of Type B Stabilization, the Contractor may construct using Optional Base Group 3.

2. FLOWABLE FILL

   A. If compaction can not be achieved through normal mechanical methods then flowable fill may be used.

   B. Flowable fill is to be placed in accordance with Section 121 of the Specifications, as approved by the Engineer.

   C. Do not allow the utility being installed to float. If a method is provided to prevent flotation from occurring, Stages #1 and #2 can be combined, if approved by the Engineer.

   D. In Stage #1, place flowable fill midway up on both sides of the utility. Allow to harden before placing Stage #2.

   E. In Stage #2, place flowable fill to the bottom of the existing base course.

FLEXIBLE PAVEMENT CUT

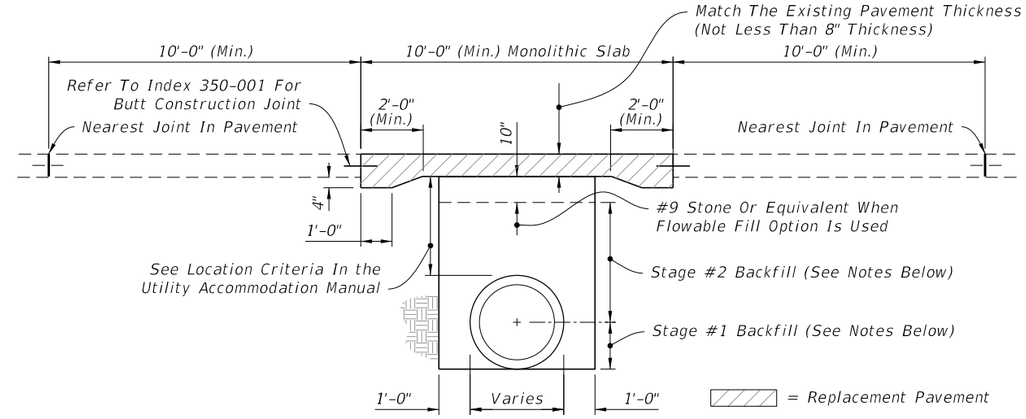

NOTES:

PAVEMENT REMOVAL AND REPLACEMENT

1. High early strength cement concrete (3000 psi) meeting the requirements of Standard Specification 346 shall be used for rigid pavement replacement.
2. Pavement shall be mechanically sawed and restored to conform with existing pavement joints within 12 hours. (See Index 350-001)

BACKFILL OPTION

1. GRANULAR BACKFILL

   A. Any edgedrain system that is removed shall be replaced with the same type materials. Any edgedrain system that is damaged shall be repaired with methods approved by the Engineer.

   B. Fill material shall be placed in accordance with the Standard Specifications. Fill material shall be special select soil in accordance with Index 350-001.

   C. In Stage #1, construct compacted fill beneath the haunches of the pipe, using mechanical tamps suitable for this purpose. This compaction applies to the material placed beneath the haunches of the pipe and above any bedding.

   D. In Stage #2, construct fill along the sides of the pipe and up to the bottom of replacement pavement.

2. FLOWABLE FILL

   A. If mechanical compaction can not be achieved through normal mechanical methods then flowable fill may be used.

   B. Flowable fill is to be placed in accordance with Section 121 of the Specifications, as approved by the Engineer.

   C. Do not allow the utility being installed to float. If a method is provided to prevent flotation from occurring, Stages #1 and #2 can be combined, if approved by the Engineer.

   D. In Stage #1, place flowable fill midway up on both sides of the utility. Allow to harden before placing Stage #2.

   E. In Stage #2, place flowable fill to the bottom of the stone layer.

RIGID PAVEMENT CUT

GENERAL NOTES

1. The details provided in this Index apply to cases in which jack and bore or directional boring methods are not required by the Engineer.
2. Flowable fill shall not be placed directly over loose, or high plastic, or muck material (see Index 120-001) which will cause settlement due to fill weight. Where highly compressible material exists, the amount, shape and depth of flowable fill must be engineered to prevent pavement settlement.
3. These details do not apply to utility cuts longitudinal to the centerline of the roadway which may require the additional use of geotextiles, special bedding and backfill, or other special requirements.
4. Method of construction must be approved by the Engineer.
5. Some pipe may require special granular backfill up to 6" above top of pipe. Geotextiles may be required to encapsulate the special granular material.
6. Where asphalt concrete overlays exist over full slab concrete pavement, the replacement pavement shall have an overlay constructed over the replacement slab. The overlay shall match the existing asphalt pavement thickness. The replacement friction course shall match the existing friction course, except structural course may be used in lieu of dense graded friction course.
7. All shoulder pavement, curb, curb and gutter, and their substructure disturbed by utility trench cut construction shall be restored in kind.
8. The use of flowable fill to reduce the time traffic is taken off a facility is acceptable but must have prior approval by the Engineer. Flowable fill use is allowed only when properly engineered for pavement crossings, whether straight or diagonal, and shall not be installed for significant depths or lengths. The maximum length shall be fifty (50) feet and a maximum depth of six (6) feet unless supported by an engineering document prepared by a registered professional engineer that specializes in soils engineering. The engineering document shall address the evaluation of local groundwater flow interruption and settlement potential.
9. Excavatable flowable fill is to be used when the flowable fill option is selected.

TRENCH CUTS AND RESTORATIONS ACROSS ROADWAYS

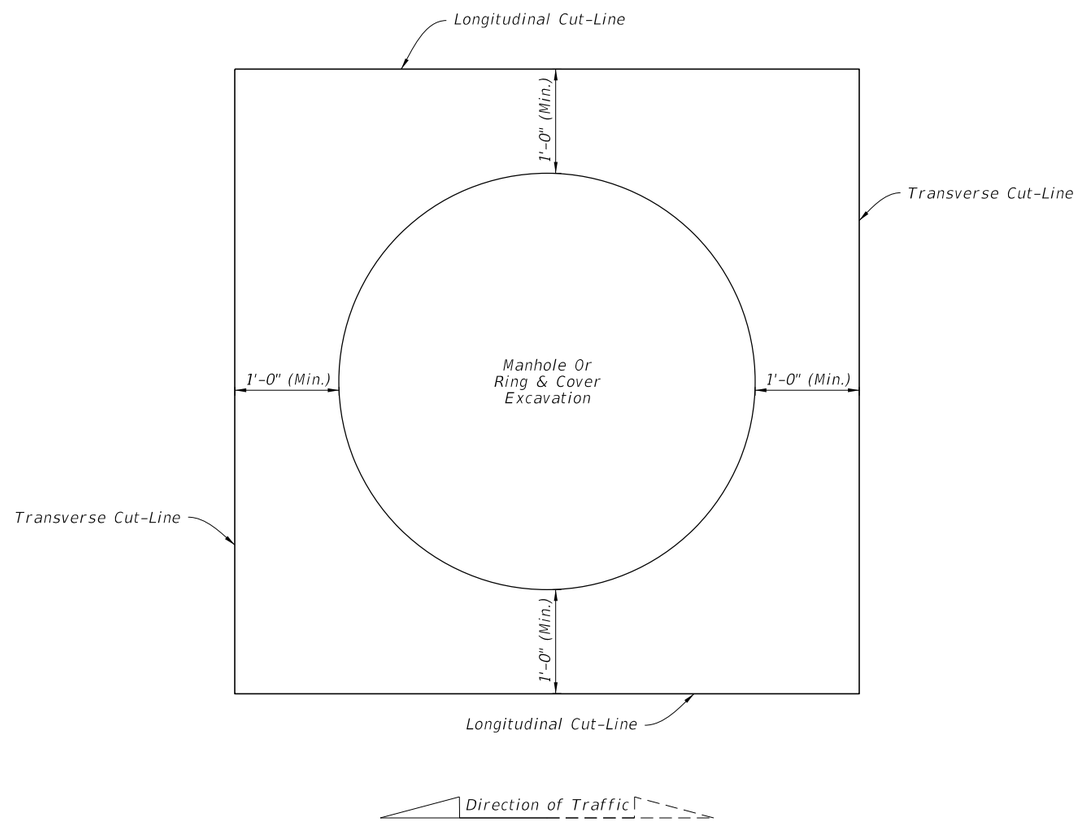

PARTIAL CUTS FOR RING AND COVER ADJUSTMENTS

NOTES

1. Cut-Lines must be straight and cleanly sawed.
2. See Sheet 1 for replacement pavement.
3. Adjust manholes prior to placing friction course when pavement resurfacing is occurring in the area adjacent to the manhole.
4. Align Longitudinal Cut-Lines with pavement joint or center of traffic lane to avoid wheel path.
5. For rigid pavement, align Transverse Cut-Lines with nearest existing joint.

10/25/2018 8:48:50 AM

NONTRENCH PAVEMENT CUTS FOR UNDERGROUND UTILITY STRUCTURES IN PAVEMENT

LAST REVISION	REVISION	DESCRIPTION:			INDEX	SHEET
11/01/17			FDOT FY 2019-20 STANDARD PLANS	UTILITY ADJUSTMENTS THRU EXISTING PAVEMENT	125-001	2 of 2

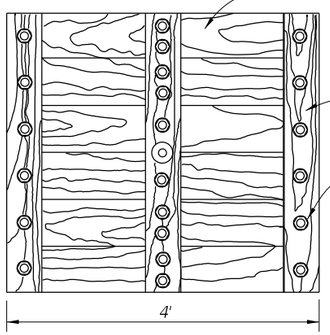

PLAN
TIMBER PLATE

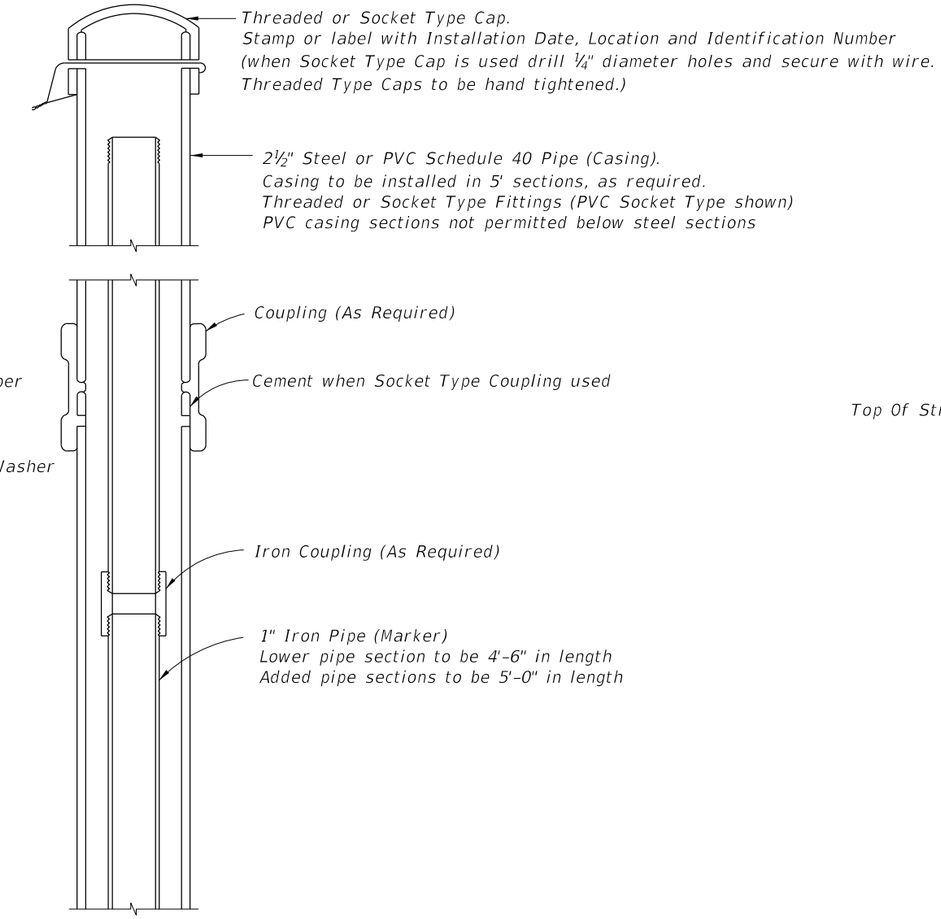

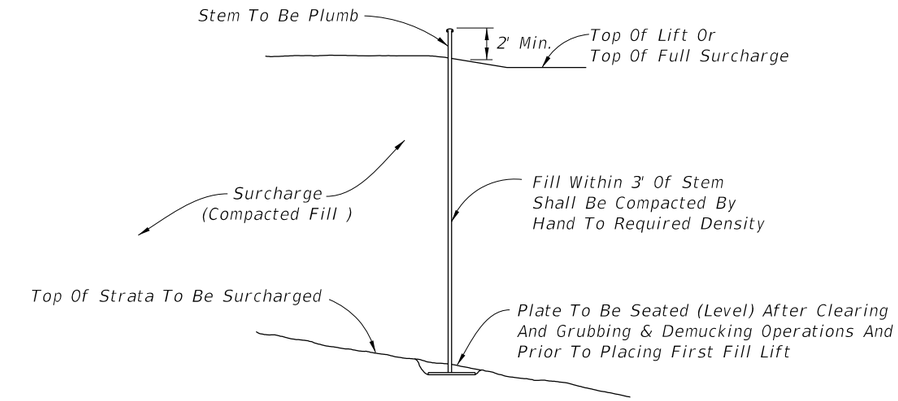

INSTALLATION

NOTES:

1. Elevation of the top of each length of marker pipe shall be determined as soon as it is installed and also immediately before the next length of marker pipe is added.
2. Settlement plate locations shall be flagged and protected from construction vehicles and equipment. If settlement plates are disturbed, they shall be replaced in kind.
3. Oakum used to construct seal should not have a mesh covering (plastic or other synthetic material).
4. The settlement plates shall be paid for under the contract unit price for Settlement Plate Assembly, AS.

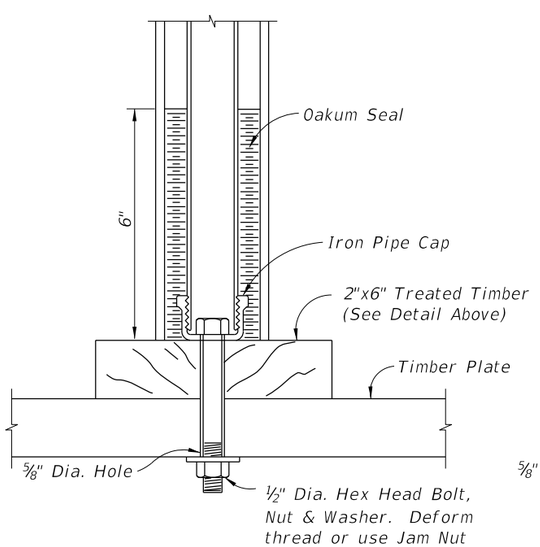

TIMBER PLATE

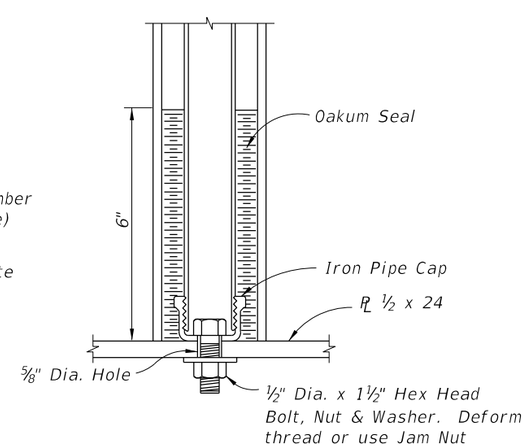

STEEL PLATE

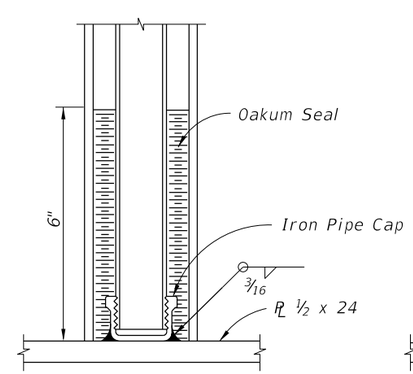

STEEL PLATE

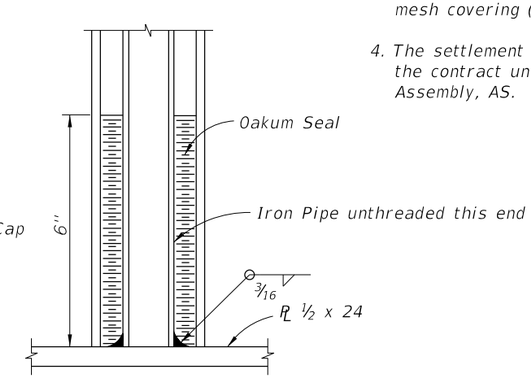

STEEL PLATE

STEM AND PLATE OPTIONS

10/25/2018 8:48:50 AM

LAST REVISION	REVISION	DESCRIPTION:			INDEX	SHEET
01/01/00			FDOT FY 2019-20 STANDARD PLANS	SETTLEMENT PLATE	141-T01	1 of 1

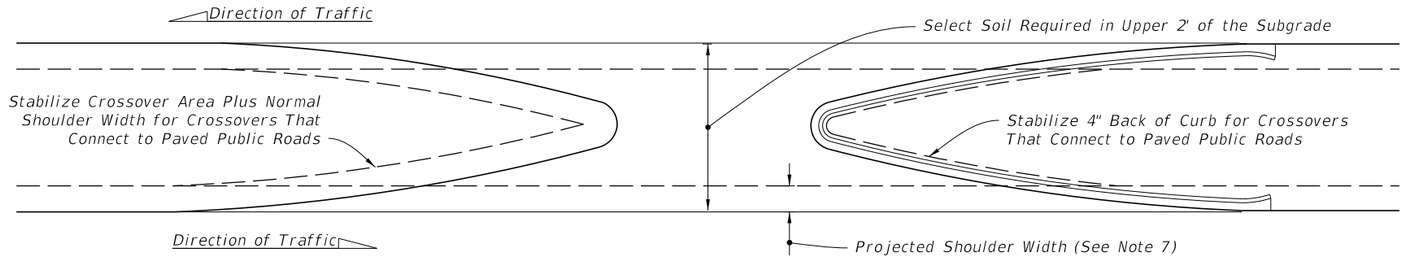

TYPICAL CROSSOVER

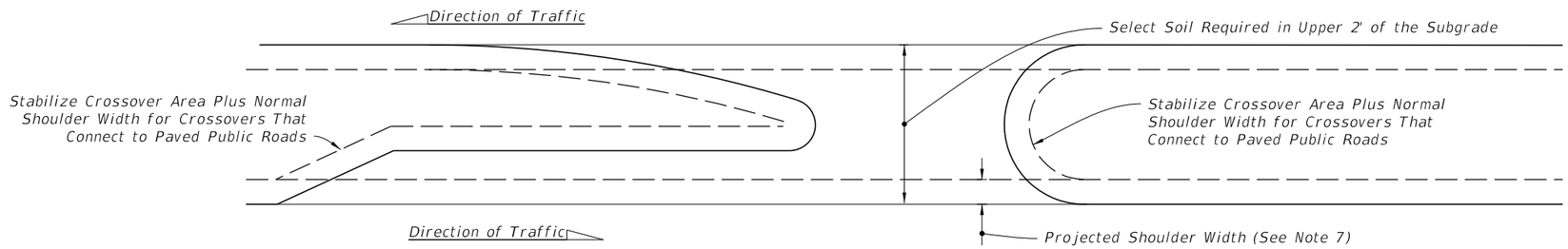

TURN LANE

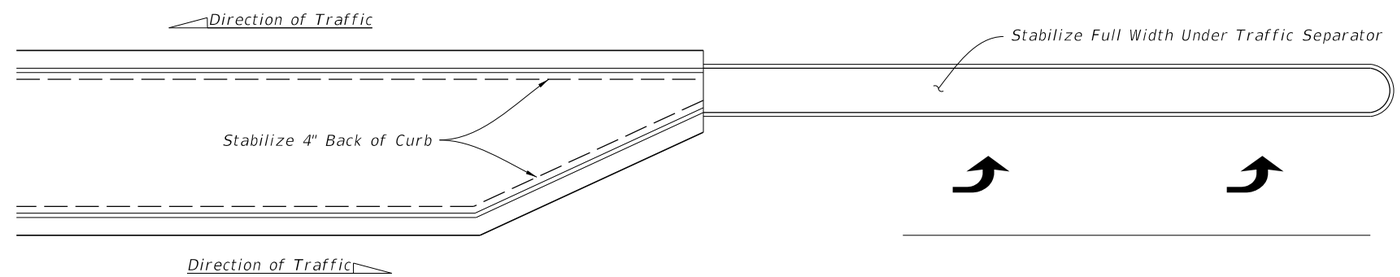

TRAFFIC SEPARATOR

NOTES:

1. When the median has curb or curb and gutter, stabilize 4" back of curb.
2. When the median has shoulder with no curb or curb and gutter, stabilize to normal shoulder width.
3. See the details above for stabilizing requirements at crossroads.
4. Stabilize entire area under all paved traffic islands.
5. Stabilize full width under all traffic separators.
6. Provide select soil where shown above and as defined on Index 120-001. For minor collectors and local facilities the depth of select material thickness may be reduced from 24" to 18".

MEDIAN STABILIZING DETAILS