HIGHMAST LIGHTING NOTES:

1. Poles are designed to support the following:
   - A. One (1) cylindrical head assembly with a maximum effective projected area of 6 sf and 340 lbs (Max.)
   - B. Eight (8) cylindrical luminaires with a maximum effective projected are of 1.5 sf and 77 lbs each.

2. Shop Drawings: This Index is considered fully detailed, only submit shop drawings for minor modifications not detailed in the Plans.

3. High Mast Structure Materials:
   - A. Poles and Backing Rings:
     - a. Less than 3/16": ASTM A1011 Grade 50, 55, 60 or 65
     - b. Greater than or equal to 3/16": ASTM A572 Grade 50, 55, 60 or 65
     - c. ASTM A595 Grade A (55 ksi yield) or Grade B (60 ksi yield)
   - B. Steel Plates: ASTM A709 or ASTM A36
   - C. Pole Caps: ASTM A1011 Grade 50, 55, 60, or 65 or ASTM B209
   - D. Weld Metal: E70XX
   - E. Stainless Steel Screws: AISI 316
   - F. Anchor Bolts, Nuts and Washers:
     - a. Anchor Bolts: ASTM F1554 Grade 55
     - b. Nuts: ASTM A563 Grade A Heavy-Hex (5 per anchor bolt)
     - c. Plate Washer: ASTM A36 (2 per anchor bolt)
   - G. Nut Covers: ASTM B26 (319-F)
   - H. Concrete: Class IV (Drilled Shaft)
   - I. Reinforcing Steel: Specification 415

4. Fabrication:
   - A. Welding:
     - a. Specification Section 460-6.4 and
     - b. AASHTO LRFD Specification for Structural Supports for Highway Signs, Luminaires, and Traffic Signals Section 14.4.4
   - B. Poles:
     - a. Round or 16-sided (Min.)
     - b. Taper pole diameter at 0.14 inches per foot
     - c. Pole shaft may be up to three sections (using telescopic field splices)
     - d. Circumferentially welded pole shafts and laminated pole shafts are not permitted
     - e. Fabricate Pole longitudinal seam welds (2 maximum) with 60 percent minimum penetration or fusion welds except as follows:
       - i. Use a full-penetration groove weld within 6 inches of the circumferential tube-to-plate connection and
       - ii. Use full-penetration groove welds on the female end section of telescopic (i.e., slip type) field splices for a minimum length of 42 inches.
   - C. Identification Tag: (Submit details for approval)
     - a. 2"x 4" (Max.) aluminum tag
     - b. Locate on the inside of the pole and visible from the handhole
     - c. Secure with 1/8" diameter stainless steel rivets or screws.
     - d. Include the following information on the ID Tag:
       1. Financial Project ID
       2. Pole Type
       3. Pole Height
       4. Manufacturers' Name
       5. Yield Strength (Fy of Steel)
       6. Base Wall Thickness
   - D. Except for Anchor Bolts, bolt hole diameters are bolt diameter plus 1/16" and anchor bolts holes are bolt diameter plus ½" (Max) prior to galvanizing.
   - E. Hot Dip Galvanize after fabrication

5. Coating:
   - A. Galvanize Anchor Bolts, Nuts and Washers: ASTM F2329
   - B. Hot Dip Galvanize all other steel items including plate washers: ASTM A123

6. Construction:
   - A. Foundation: Specification 455 Drilled Shaft, except that payment is included in the cost of the Structure.
   - B. After Installation: Place wire screen between top of foundation and bottom of baseplate in accordance with Specification 649-6.

7. Wind Speed by County:

130 MPH
Alachua, Baker, Bradford, Calhoun, Clay, Columbia, Dixie, Duval, Gadsden, Gilchrist, Hamilton, Jackson, Jefferson, Lafayette, Leon, Liberty, Nassau, Madison, Putnam, Suwannee, Taylor, Union and Wakulla Counties.

150 MPH
Bay, Citrus, De Soto, Flagler, Franklin, Glades, Gulf, Hardee, Hendry, Hernando, Highlands, Hillsborough, Holmes, Lake, Levy, Manatee, Marion, Okaloosa, Okeechobee, Orange, Osceola, Pasco, Pinellas, Polk, Santa Rosa, Seminole, St. Johns, Sumter, Volusia, Walton and Washington Counties.

170 MPH
Brevard, Broward, Charlotte, Collier, Escambia, Indian River, Lee, Martin, Miami-Dade, Monroe, Palm Beach, Sarasota and St. Lucie Counties.

10/18/2018 1:22:05 PM

STANDARD POLE DESIGN NOTES

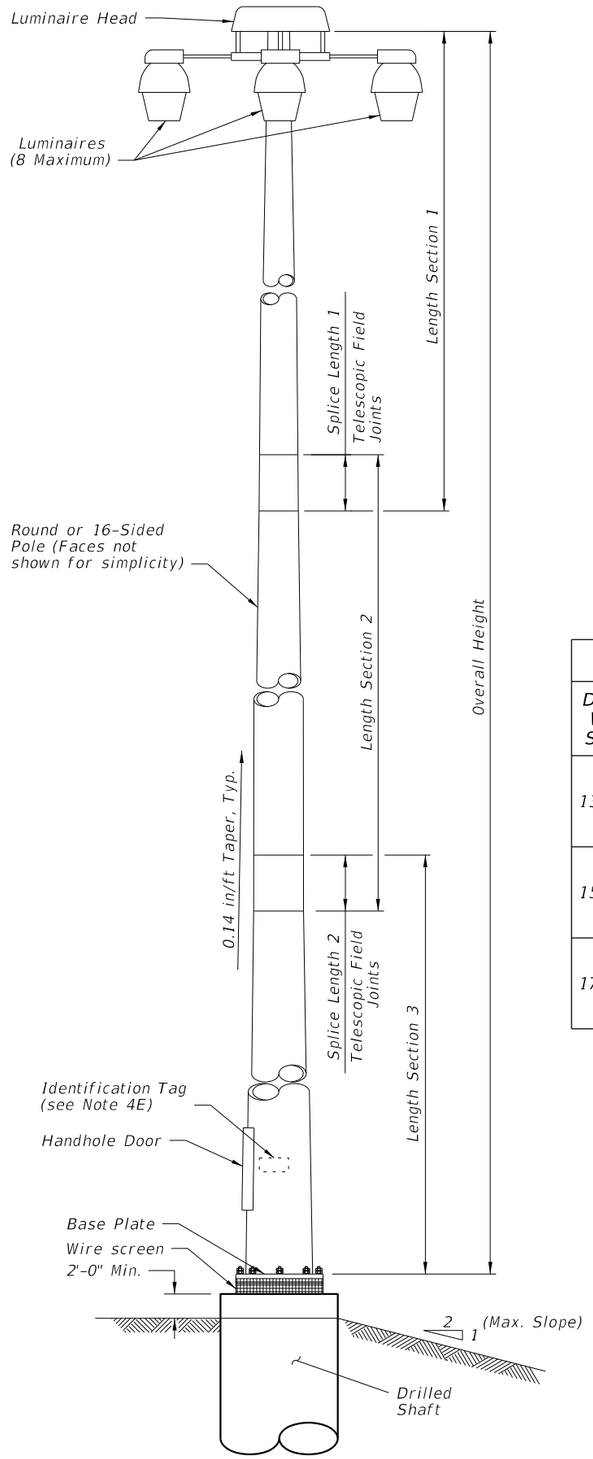

ELEVATION

POLE DESIGN TABLE*												
Design Wind Speed	Pole Overall Height (ft)	SECTION 1 (TOP)				SECTION 2				SECTION 3		
		Length	Wall Thickness (in.)	Minimum Splice Length 1	Base Dia. (in.)	Length	Wall Thickness (in.)	Minimum Splice Length 2	Base Dia. (in.)	Length	Wall Thickness (in.)	Base Dia. (in.)
130 mph	80	41'-0"	0.250	2'-0"	11	42'-0"	0.250	--	16	—	—	—
	100	23'-0"	0.179	2'-0"	10	41'-0"	0.250	2'-6"	15	43'-0"	0.250	20
	120	41'-0"	0.250	2'-0"	12	43'-0"	0.250	2'-9"	17	43'-0"	0.313	22
150 mph	80	41'-0"	0.250	2'-0"	11	42'-0"	0.313	--	16	—	—	—
	100	23'-0"	0.179	2'-0"	10	41'-0"	0.250	2'-6"	15	43'-0"	0.313	20
	120	41'-0"	0.250	2'-6"	16	43'-0"	0.250	3'-0"	21	44'-0"	0.375	26
170 mph	80	40'-0"	0.250	2'-3"	13	43'-0"	0.313	--	18	--	--	—
	100	23'-0"	0.250	2'-0"	11	42'-0"	0.313	2'-6"	16	44'-0"	0.375	21
	120	41'-0"	0.250	3'-0"	18	44'-0"	0.313	3'-6"	23	45'-0"	0.375	28

* Diameter Measured Flat to Flat

BASE PLATE AND BOLTS DESIGN TABLE							
Design Wind Speed	Pole Overall Height (ft)	Base Plate Diameter (in.)	Base Plate Thickness (in.)	Bolt Circle (in.)	No. Bolts	Bolt Diameter (in.)	Bolt Embedment (in.)
130 mph	80	30.0	3.000	23.0	8	1.75	38
	100	34.0	3.000	27.0	8	1.75	42
	120	38.0	3.875	30.0	8	2.00	48
150 mph	80	30.0	3.000	23.0	8	1.75	43
	100	36.0	3.875	28.0	8	2.00	47
	120	44.0	3.875	35.0	8	2.25	52
170 mph	80	32.0	3.000	25.0	8	1.75	47
	100	37.0	3.000	29.0	8	2.00	54
	120	46.0	3.875	37.0	10	2.25	58

SHAFT DESIGN TABLE				
Design Wind Speed	Pole Overall Height (ft)	Shaft Diameter	Shaft Length	Longitudinal Reinforcement
130 mph	80	4'-0"	13'-0"	14-#11
	100	4'-6"	14'-0"	16-#11
	120	4'-6"	16'-0"	16-#11
150 mph	80	4'-0"	14'-0"	14-#11
	100	4'-6"	16'-0"	16-#11
	120	5'-0"	18'-0"	18-#11
170 mph	80	4'-6"	15'-0"	16-#11
	100	4'-6"	17'-0"	16-#11
	120	5'-0"	20'-0"	18-#11

NOTE:
Foundations are assumed to be in level ground. For Foundation with slopes 5H:1V and greater, increase the shaft depth in accordance with the additional shaft depth due to ground slope table. For slope or diameter values in between those shown in the table, use the higher value.

ADDITIONAL SHAFT DEPTH DUE TO GROUND SLOPE (ft)		
Ground Slope	Drilled Shaft Diameter (ft)	
	4	5
5H:1V	3	4
4H:1V	4	5
3H:1V	5	6
2H:1V	7	9

POLE DESIGN TABLES

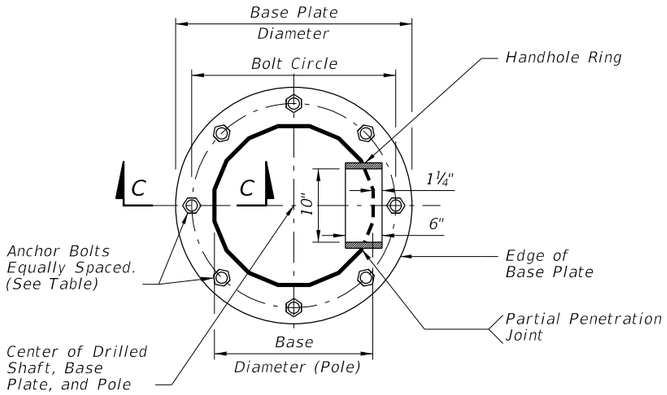

(T = Wall Thickness)

SECTION A-A

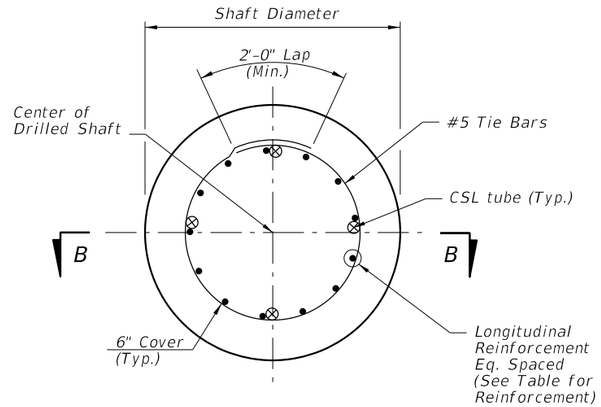

FOUNDATION PLAN

(Anchor Bolts and Conduits Not Shown)

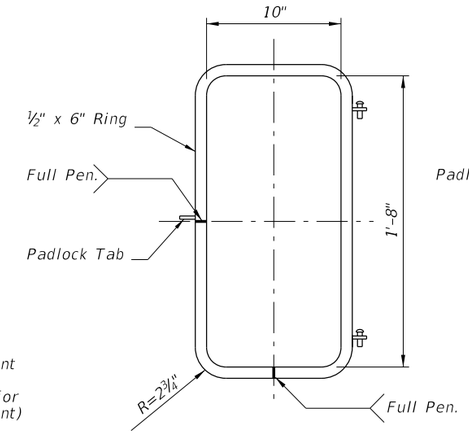

HANDHOLE RING

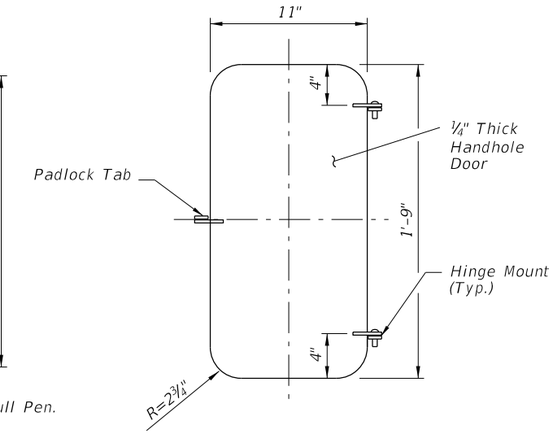

HANDHOLE DOOR

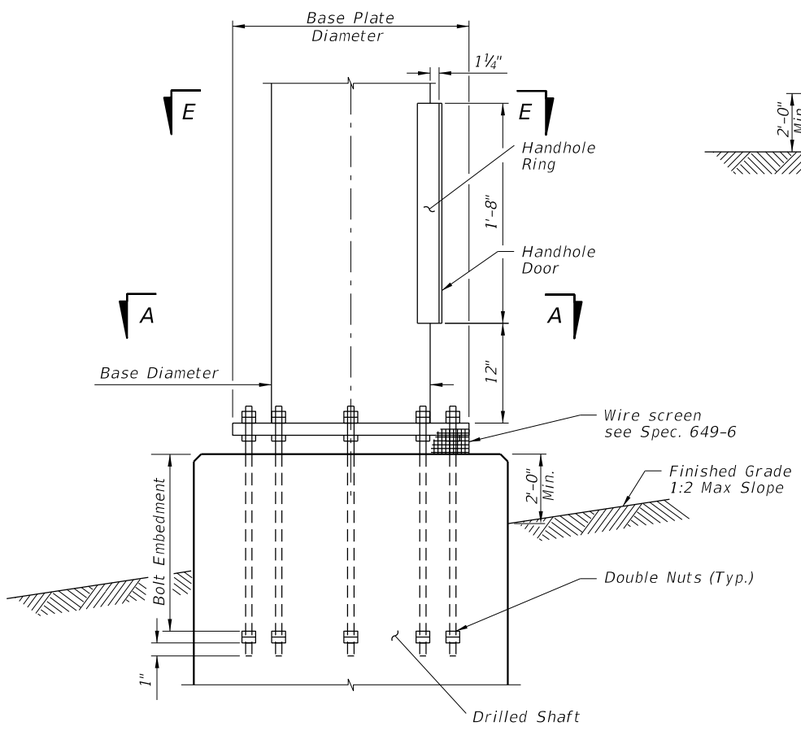

BASE PLATE AND ANCHORAGE ELEVATION

(Conduits Not Shown)

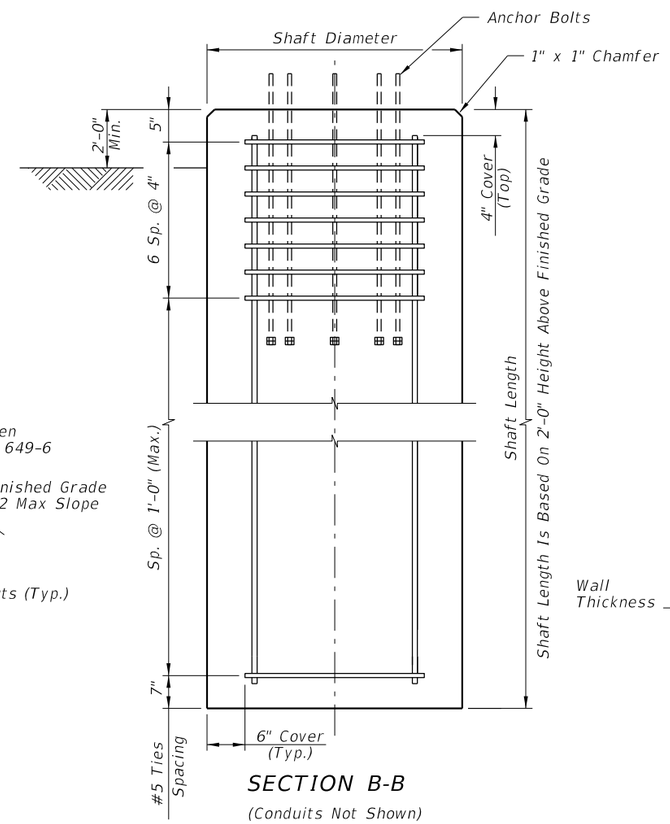

SECTION B-B

(Conduits Not Shown)

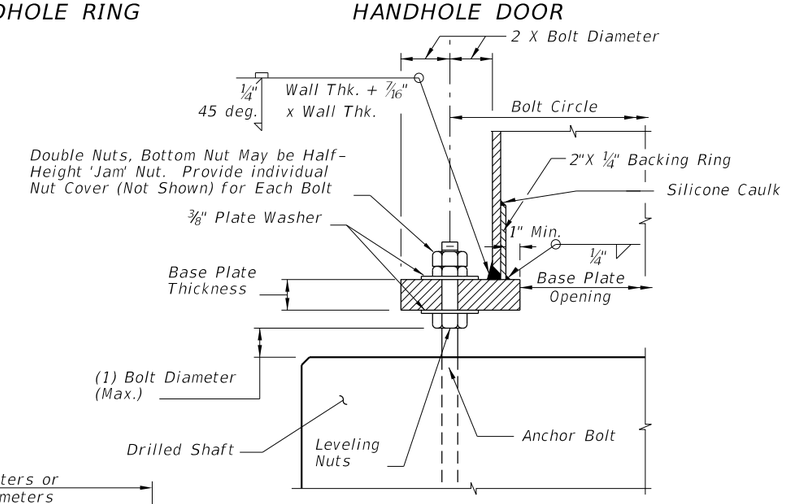

SECTION C-C

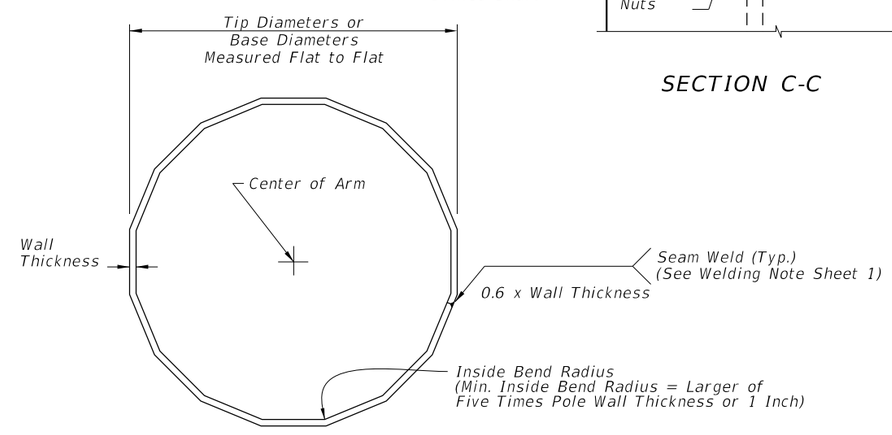

SECTION E-E

POLE FOUNDATION

LAST REVISION	REVISION	DESCRIPTION:			INDEX	SHEET
11/01/18			FDOT FY 2019-20 STANDARD PLANS	HIGH MAST LIGHTING	715-010	3 of 6

10/18/2018 1:22:17 PM

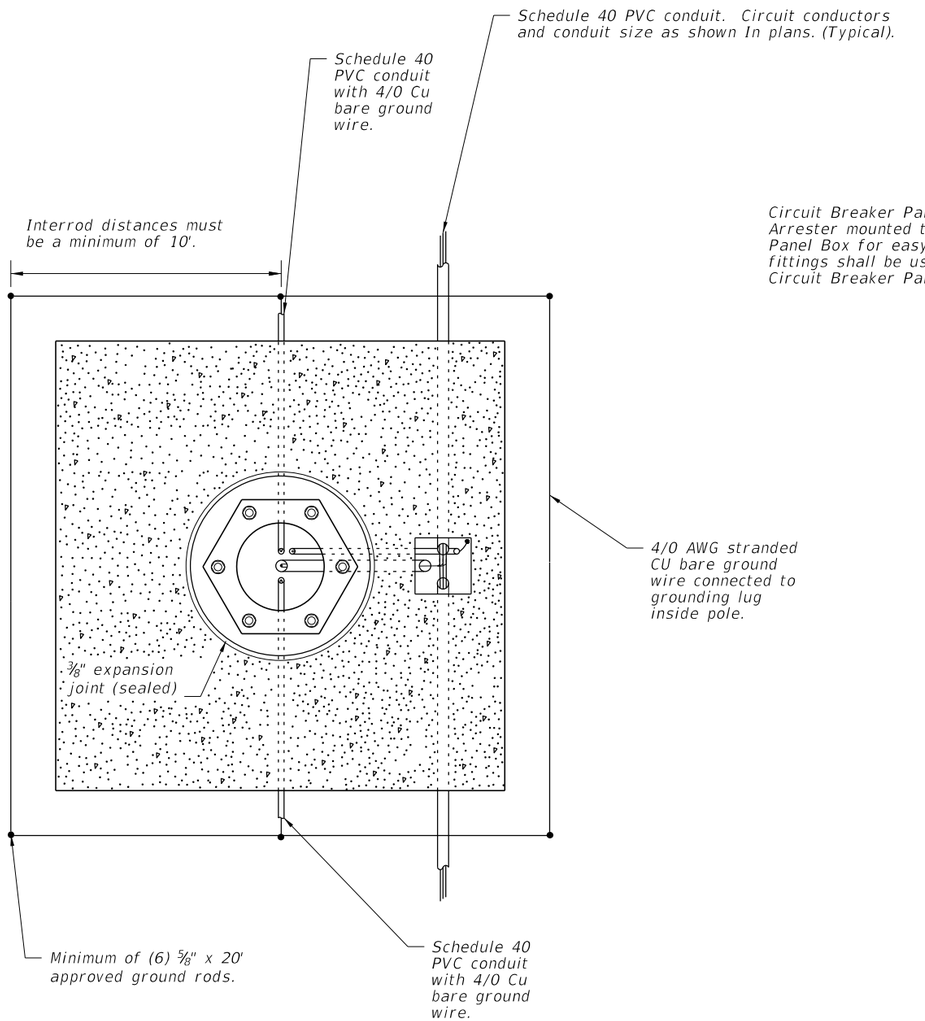

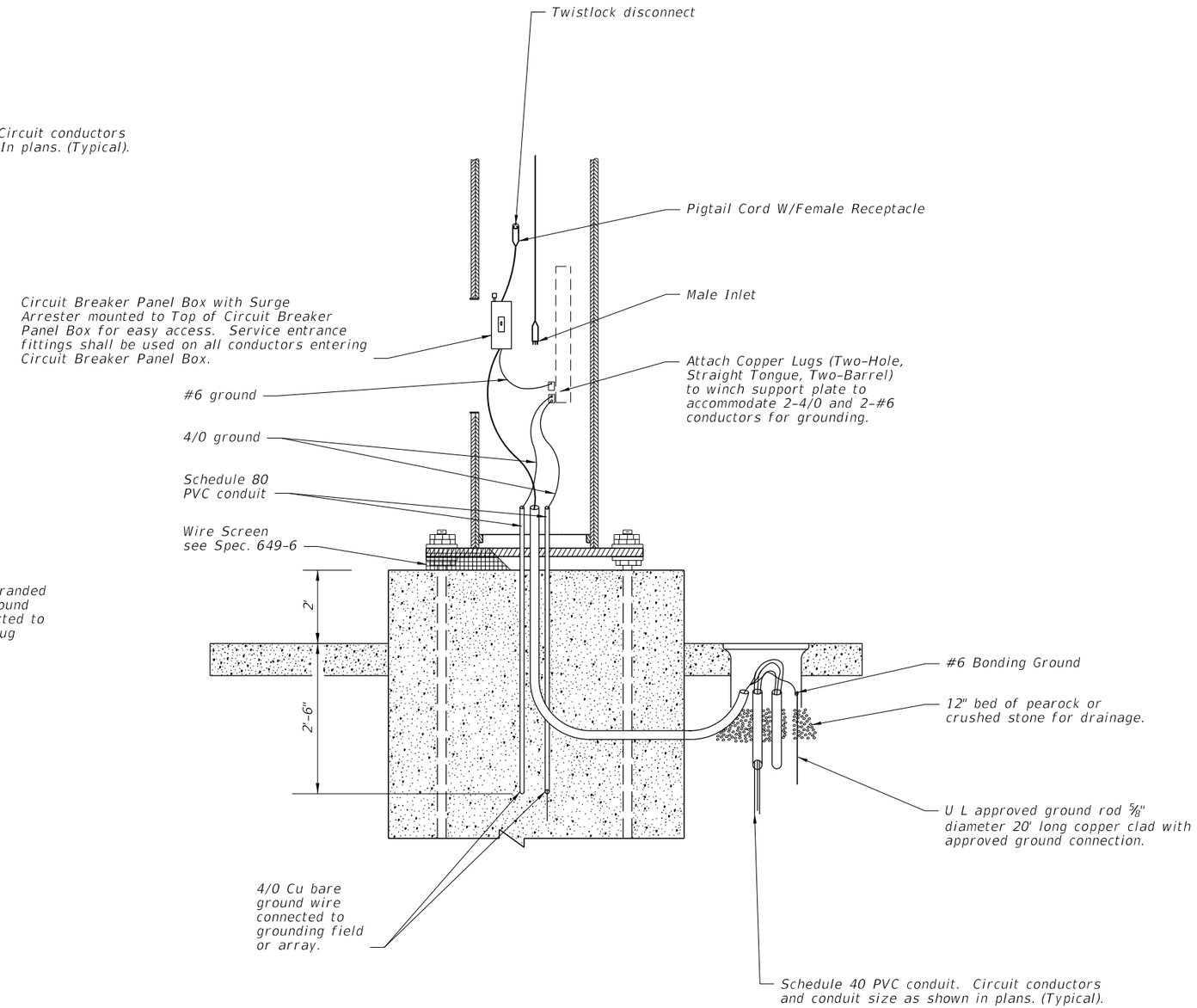

NOTES:

1. At all pull boxes and pole bases, ends of conduit shall be sealed in accordance with Section 630 of the Standard Specifications For Road And Bridge Construction.
2. Slabs to be placed around all Poles and Pull Boxes.
3. For Pull Boxes between Poles refer to Index 715-001.

10/18/2018 1:22:21 PM

WIRING DETAILS

The contractor's attention is directed to those plan sheets detailing the mounting of luminaires at the pole top. Particular attention is directed to alignment of luminaire light distributions. Special attention must be exercised in the physical alignment of these luminaires to ensure that the approved photometric layout is physically produced at each lighting standard in the field. A marking shall be placed on the external face of the refractor to allow visual inspection of alignment. The marking shall correspond to the 0° axis of the refractor.

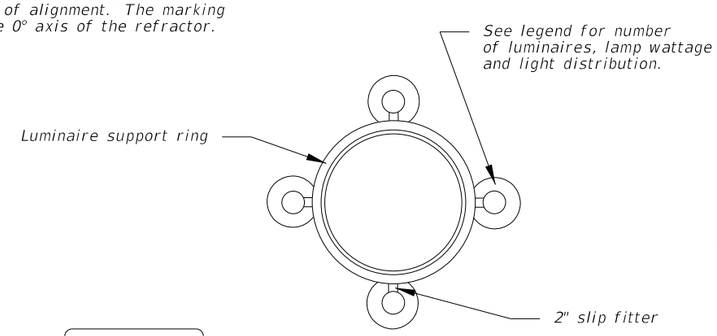

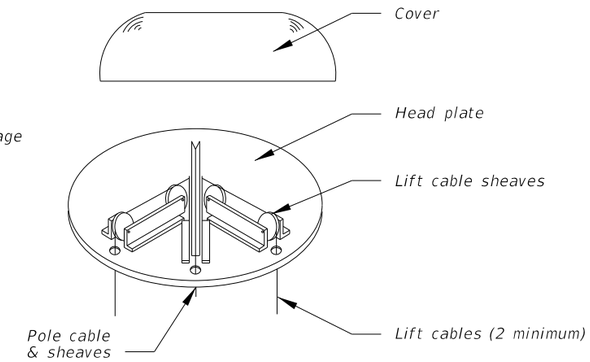

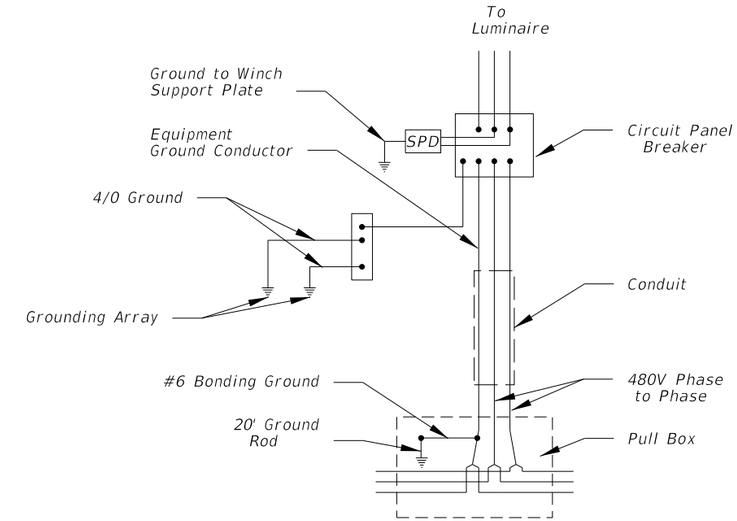

HIGH MAST POLE WIRING DIAGRAM

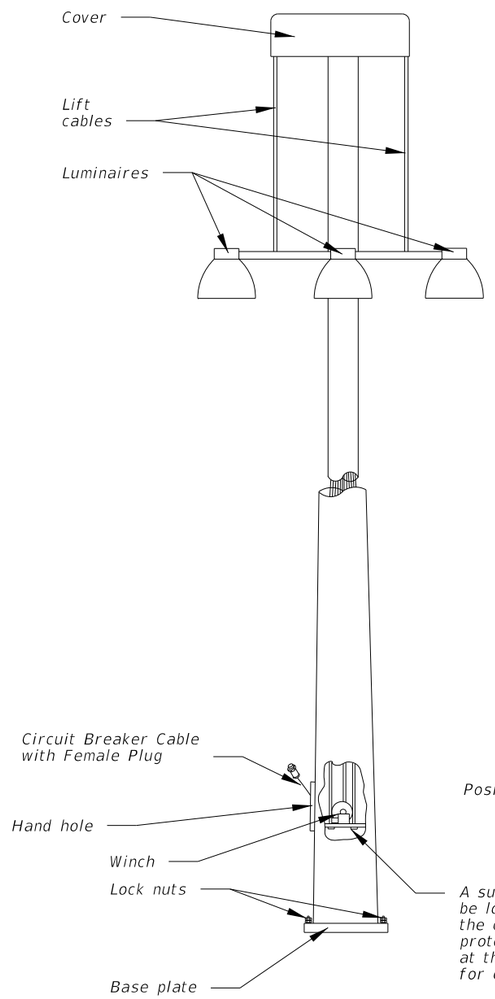

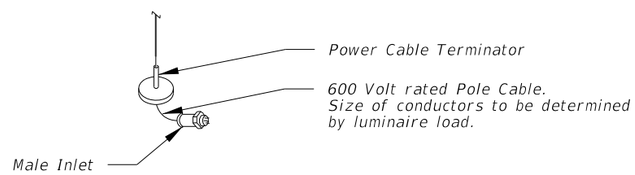

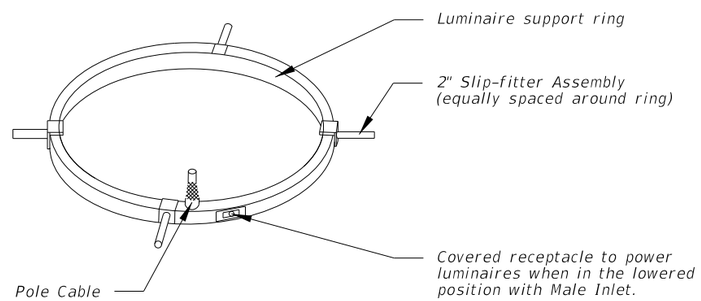

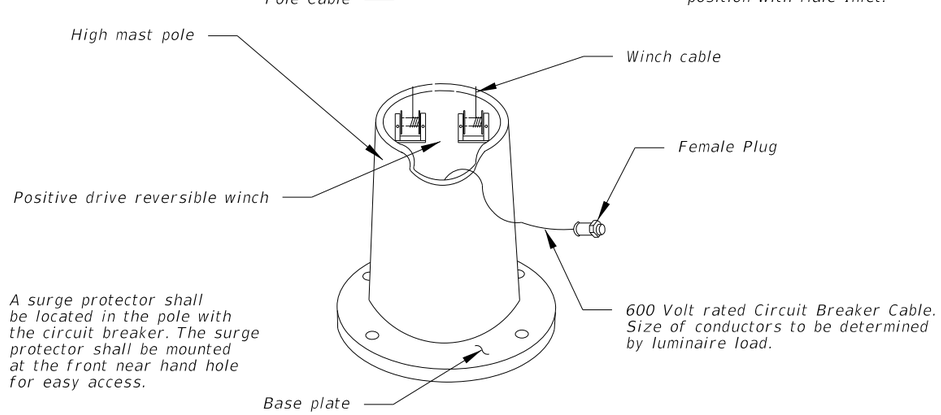

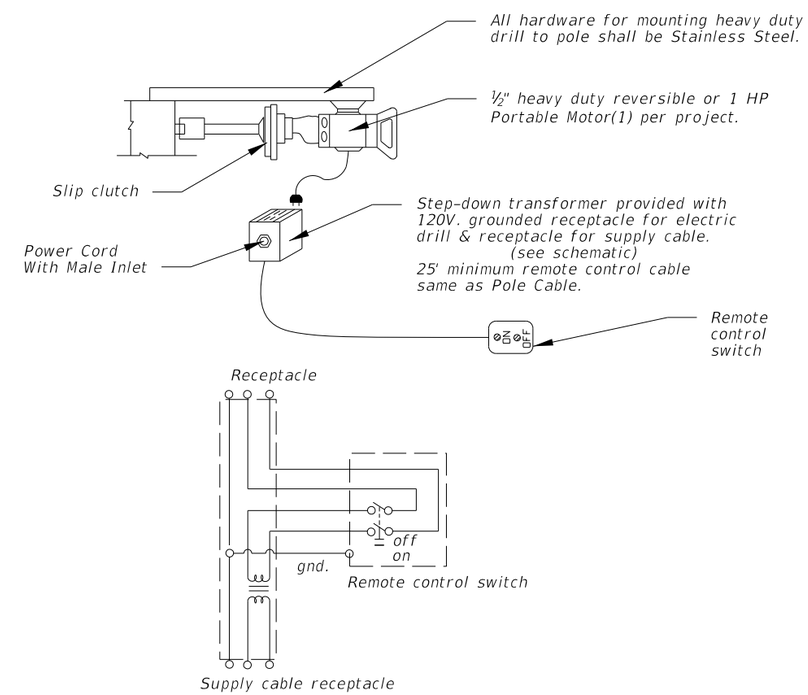

SCHEMATIC OF REMOTE AUXILIARY POWER UNIT

LOWERING DETAILS

10/18/2018 1:22:21 PM

LAST REVISION	REVISION	DESCRIPTION:			INDEX	SHEET
11/01/17			FY 2019-20 STANDARD PLANS	HIGH MAST LIGHTING	715-010	5 of 6

NOTES:

1. Use compacted select material in accordance with Index 120-001.
2. Concrete shall be Class NS with a minimum strength at 28 days of f'c=2.5 ksi.
3. Outside edge of slab shall be cast against formwork.
4. The pull box shown is 13" x 24"; others approved under Specification 635 may be used.
5. Slabs to be placed around all Poles and Pull Boxes. In urban areas or where space is limited slab dimensions may be adjusted as shown in the plans.
6. Concrete for slabs around poles and pull boxes shall be included in the price of pole or pull box.
7. The expansion joint shall consist of ½" of closed-cell polyethylene foam expansion material. The top ½" of expansion material shall be removed after pouring the slab and sealed with an APL approved Type A sealant meeting the requirements of Specification 932.

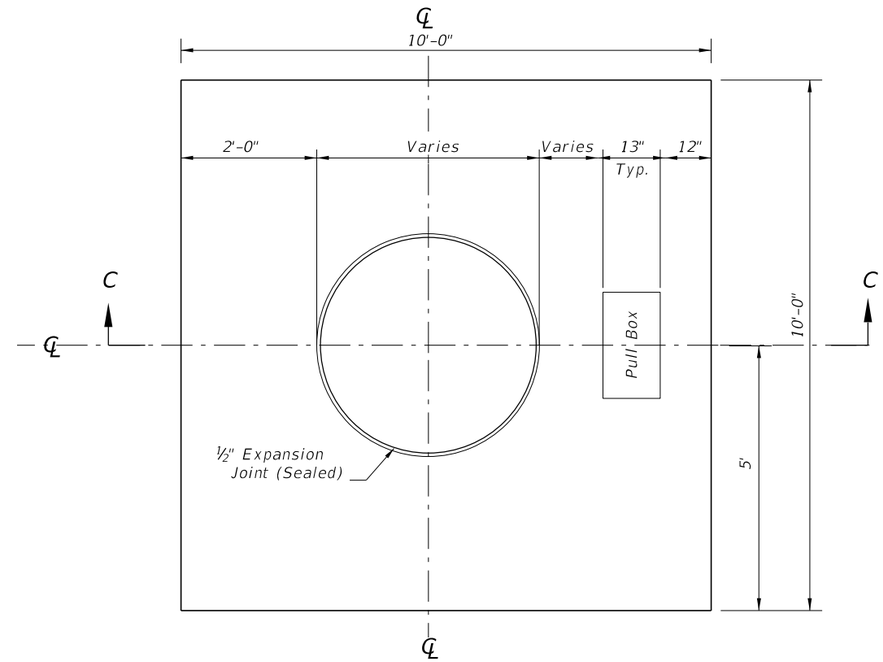

SLAB DIMENSIONS

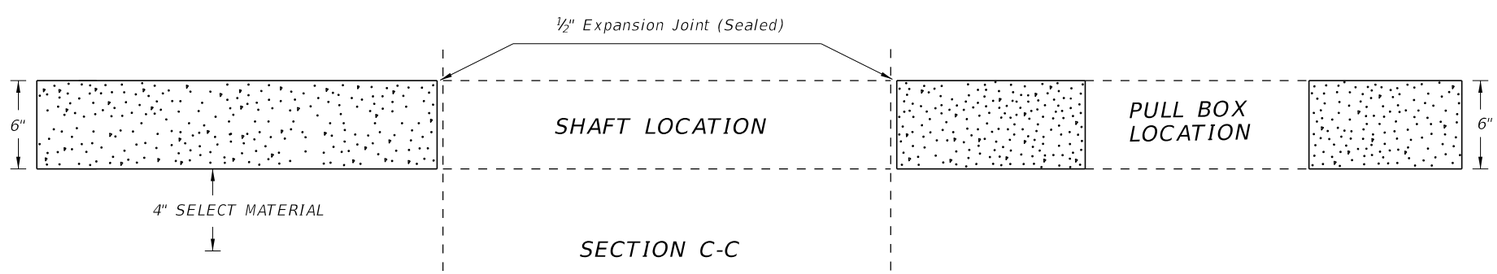

SLAB DETAILS

LAST REVISION	REVISION	DESCRIPTION:			INDEX	SHEET
11/01/17			FY 2019-20 STANDARD PLANS	HIGH MAST LIGHTING	715-010	6 of 6

10/18/2018 1:22:22 PM