GENERAL NOTES:

1. Poles are designed to support the following:
   - A. Luminaire Effective Projected Area (EPA): 1.55 SF
   - B. Weight: 75 lb.

2. Shop Drawings: This Index is considered fully detailed, only submit shop drawings for minor modifications not included in the Plans.

3. Materials:
   - A. Pole, Pole Connection Extrusions and Arm Extrusions: ASTM B221, Alloy 6063-T6 or Alloy 6061-T6
   - B. Bars, Plates, Stiffeners and Backer Ring: ASTM B221, Alloy 6063-T6
   - C. Caps and Covers: ASTM B-26, Alloy 319-F
   - D. Steel Bearing Plate: ASTM A709 or ASTM A36 Grade 36
   - E. Aluminum Weld Material: ER 4043
   - F. Transformer and Frangible Base Materials: ASTM B26 or ASTM B108, Alloy 356-T6
   - G. Bolts, Nuts and Washers:
     - a. Shoe Base Bolts: ASTM F3125, Grade A325, Type 1
     - b. Nuts: ASTM A563 Grade DH Heavy-Hex
     - c. Washer: ASTM F436 Type 1
   - H. Anchor Bolts, Nuts, and Washers:
     - a. Anchor Bolts: ASTM F1554 Grade 55
     - b. Nuts: ASTM A563 Grade A Heavy-Hex
     - c. Plate Washer: ASTM A36
   - I. Stainless Steel Fasteners: ASTM F593 Alloy Group 2, Condition A, CW1 or SH1
   - J. Nut Covers: ASTM B26 (319-F)
   - K. Concrete: Class 1
   - L. Reinforcing Steel: Specification 415

4. Fabrication:
   - A. Weld Arm and Pole (Alloy 6063) in the T4 temper using 4043 filler. Age the Arm and Pole artificially to the T6 temper after welding.
   - B. Transverse welds are only allowed at the base.
   - C. Roadway Light Pole Taper: Taper as required to provide a round top O.D. of 6" and a base O.D. of 10". Portions of the pole near the base shoe and at the arm connections may be held constant at 10" and 6" respectively to simplify fabrication.
   - D. Median Barrier Mounted Light Pole Taper: Taper as required to provide a 6" O.D. round top with an 11" x 7" O.D. oblong base. Portions of the pole near the base and at the arm connections may be held constant at 11"x 7" oblong and 6" round respectively to simplify fabrication.
   - E. Provide 'J', 'S' or 'C' hook at top of pole for electrical wires.
   - F. Equip poles located on bridges, walls and concrete median barriers/Traffic Railings with a vibration damper.
   - G. Perform all welding in accordance with AWS D1.2.
   - H. Embedded Junction Box (EJB):
     - a. Weld all seams continuously and grind smooth.
     - b. Hot Dip Galvanize after Fabrication.
     - c. Provide a watertight cover with neoprene gasket and secure cover with galvanized screws.
   - I. For Median Barrier Mounted Aluminum Light Poles, the fabricator must demonstrate the ability to produce a crack free pole. The fabricator's Department-approved QC Plan must contain the following information prior to fabrication:
     - a. Tests demonstrating a pole with a $\frac{1}{4}$" wall thickness achieves and ultimate moment capacity of 36 kip*ft in the strong axis and 30 kip*ft in the weak axis.
     - b. Tests demonstrating a pole with a $\frac{5}{16}$" wall thickness achieves an ultimate moment capacity of 44 kip*ft in the strong axis and 37 kip*ft in the weak axis.
     - c. Test results showing the pole does not buckle at the shape transition area under the ultimate moment capacity loads.
     - d. Complete details and calculations for the reinforced 4"x 6" (Min.) handhole located 1'-6" above the base plate.
   - J. Identification Tag: (Submit details for approval.)
     - a. 2" x 4" (Max.) aluminum identification tag.
     - b. Locate on the inside of the transformer base and visible from the door opening.
     - c. Secure to transformer base with $\frac{1}{8}$" diameter stainless steel rivets or screws.
     - d. Include the following information on the ID Tag:
       1. Financial Project ID
       2. Pole Height
       3. Manufacturer's Name

5. Coatings/Finish:
   - A. Pole and Arm Finish: 50 grit satin rubbed.
   - B. Galvanize Steel Bolts, Screws, Nuts and Washers: ASTM F2329
   - C. Hot Dip Galvanize EJB and other steel items including poles and plate washers: ASTM A123

6. Construction:
   - A. Foundation: Specification 455, except payment for the foundation is included in the cost of the pole.
   - B. Frangible Base, Base Shoe, and Clamp:
     - a. Certify that the Clamp, Frangible Transformer Base, and Base Shoe Design are capable of providing the required capacity.
     - b. Certify the Base conforms to the current FHWA required AASHTO Frangibility Requirements, tested under NCHRP Report 350 Guidelines (e.g. Akron Foundry TB1-17).
     - c. Do not erect pole without Luminaire attached.

7. Embedded Junction Box (EJB): Install EJBs per Note 4 and in accordance with Specification 635, as shown on the following Sheets.

8. Wind Speed by County:

   120 MPH
   Alachua, Baker, Bradford, Calhoun, Clay, Columbia, Dixie, Duval, Gadsden, Gilchrist, Hamilton, Jackson, Jefferson, Lafayette, Leon, Liberty, Nassau, Madison, Putnam, Suwannee, Taylor, Union and Wakulla Counties.

   140 MPH
   Bay, Citrus, De Soto, Flagler, Franklin, Glades, Gulf, Hardee, Hendry, Hernando, Highlands, Hillsborough, Holmes, Lake, Levy, Manatee, Marion, Okaloosa, Okeechobee, Orange, Osceola, Pasco, Pinellas, Polk, Santa Rosa, Seminole, St. Johns, Sumter, Volusia, Walton and Washington Counties.

   160 MPH
   Brevard, Broward, Charlotte, Collier, Escambia, Indian River, Lee, Martin, Miami-Dade, Monroe, Palm Beach, Sarasota and St. Lucie Counties.

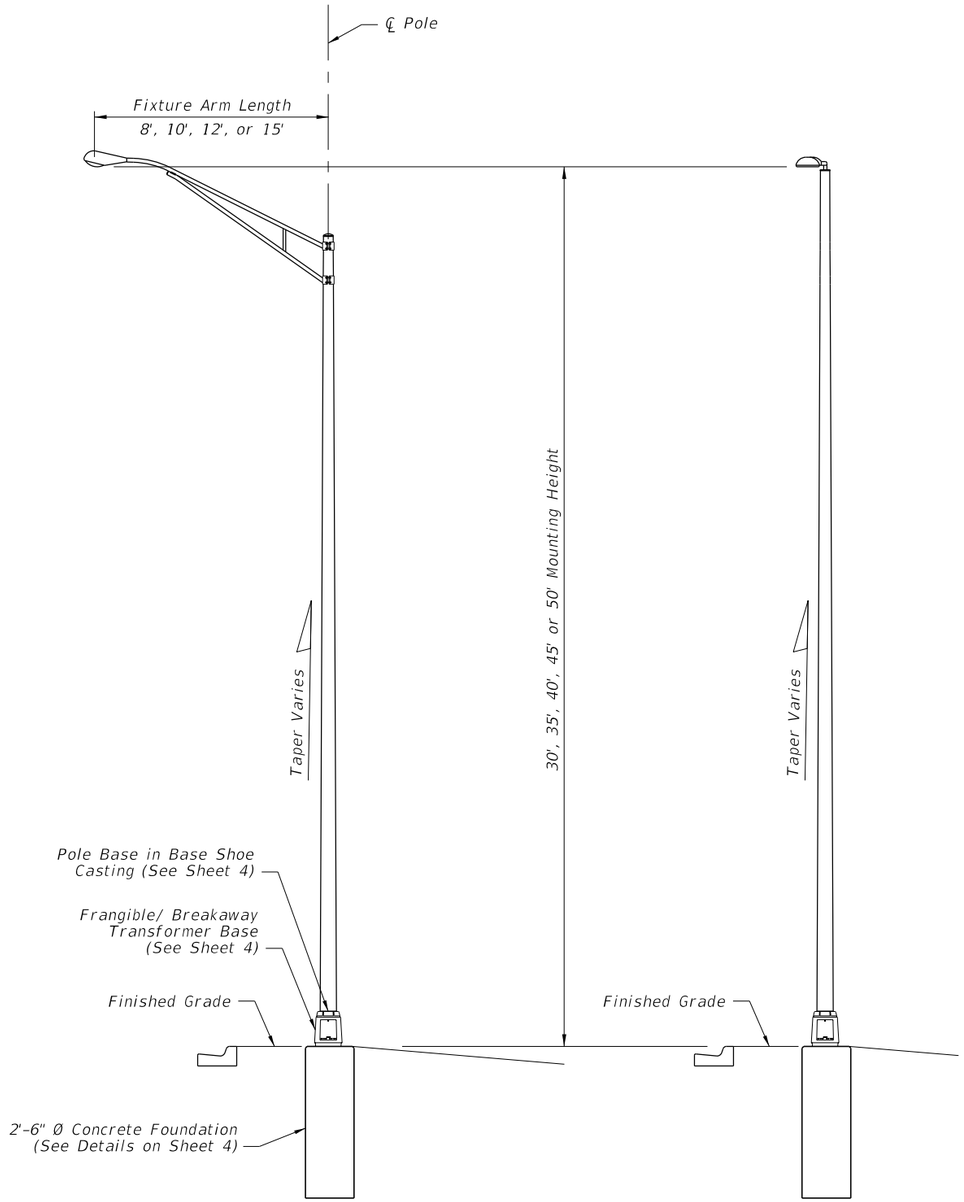

STANDARD ROADWAY ALUMINUM LIGHT POLE W/ARM

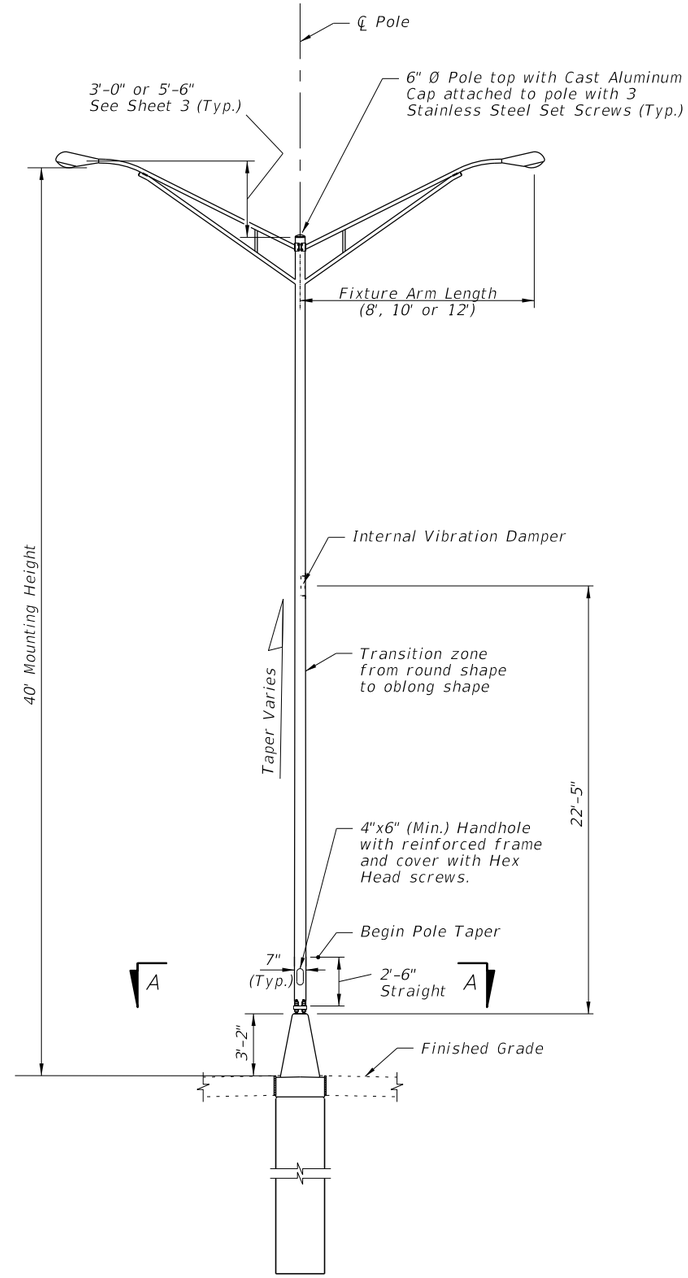

STANDARD ROADWAY ALUMINUM LIGHT POLE W/TOP MOUNT

MEDIAN BARRIER MOUNTED ALUMINUM LIGHT POLE ON CYLINDRICAL FOUNDATION

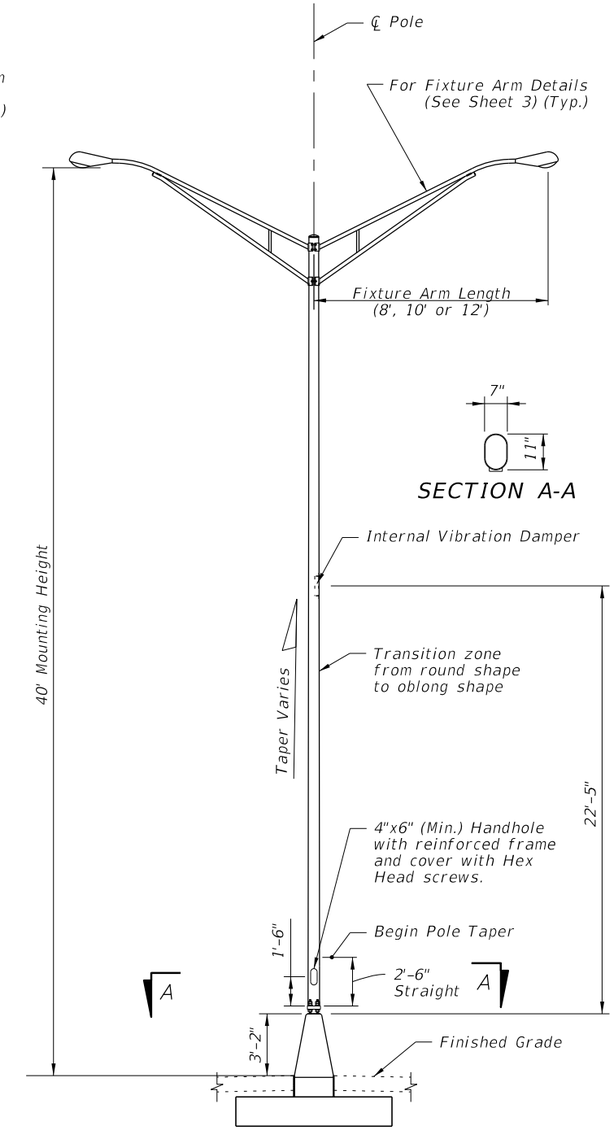

MEDIAN BARRIER MOUNTED ALUMINUM LIGHT POLE ON SPREAD FOOTING FOUNDATION

ELEVATIONS

10/30/2018 2:57:46 PM

LAST REVISION	REVISION	DESCRIPTION:			INDEX	SHEET
04/03/18			FDOT FY 2019-20 STANDARD PLANS	STANDARD ALUMINUM LIGHTING	715-002	2 of 8

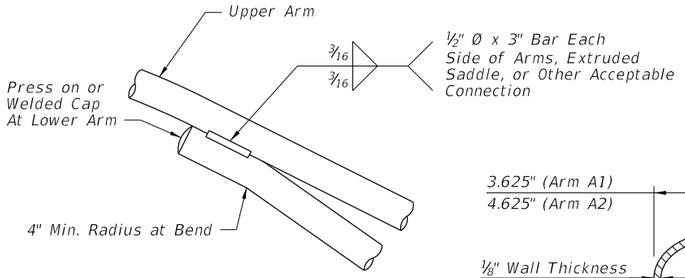

ARM CONNECTION DETAIL

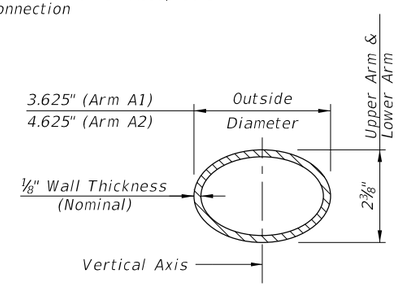

ARM SECTION

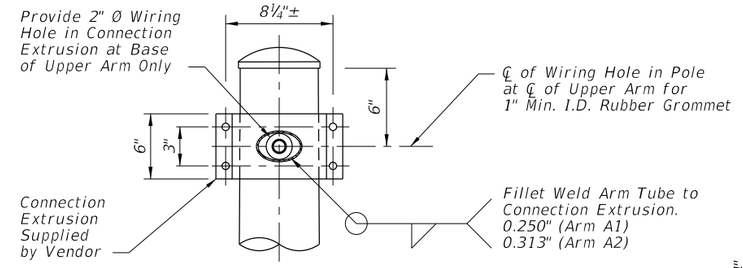

SECTION A-A
(Connection At Lower Arm Similar)

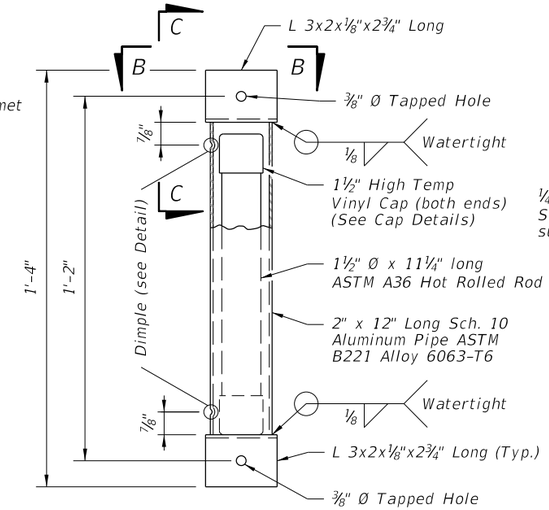

VIBRATION DAMPER ELEVATION

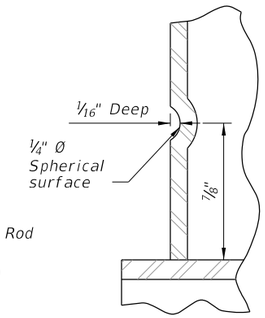

DIMPLE DETAIL

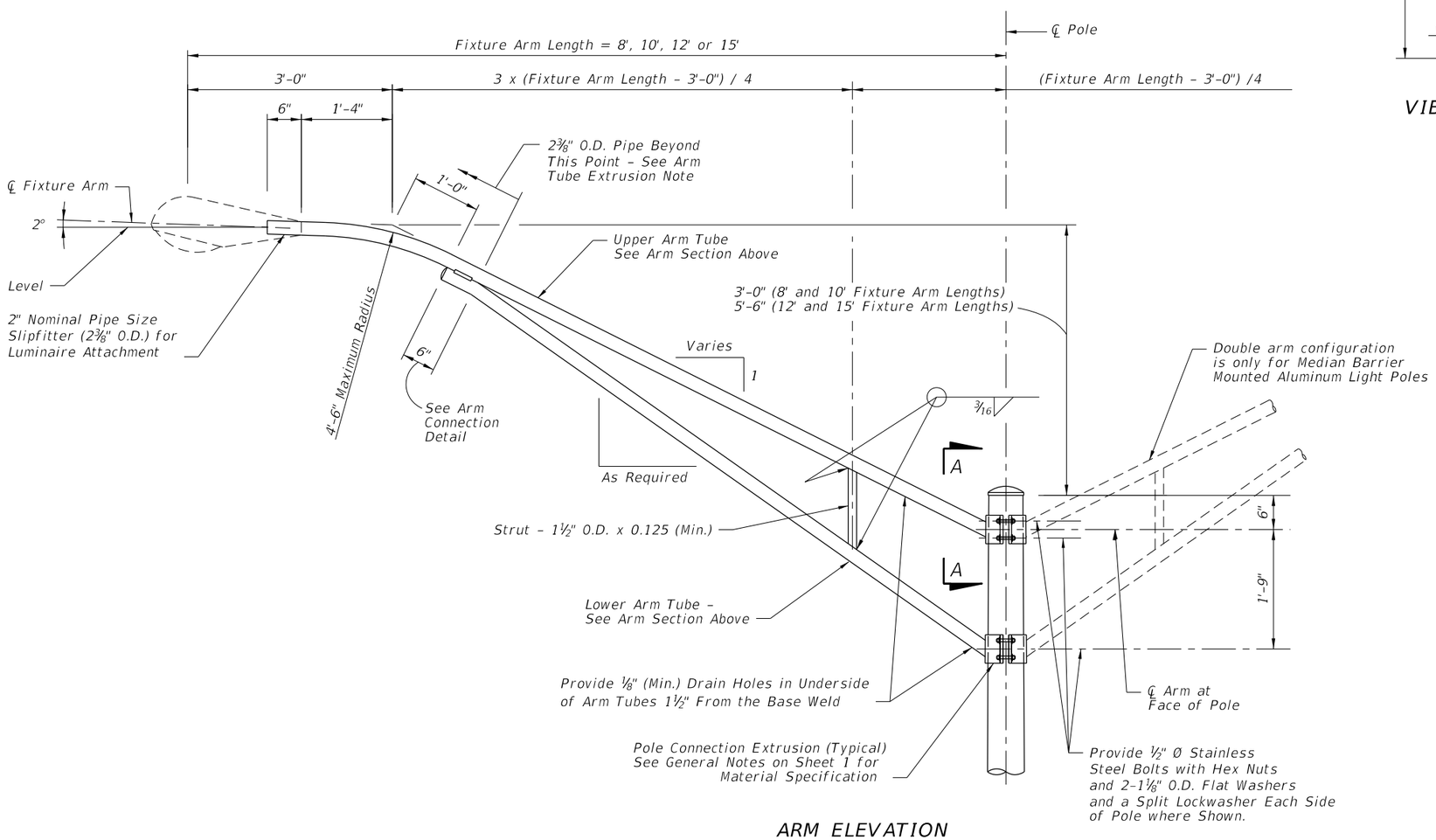

ARM ELEVATION

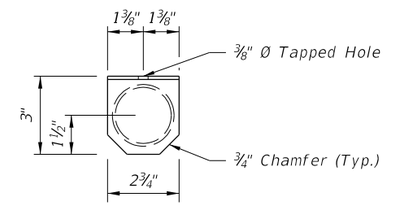

VIEW B-B

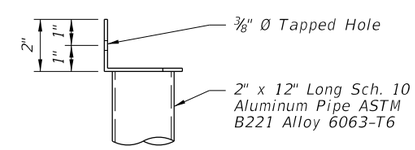

VIEW C-C

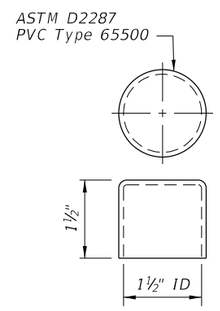

HIGH TEMP VINYL CAP DETAIL

ARM TUBE EXTRUSIONS NOTES:

At the pole connections, provide arm tube extrusions with dimensions as shown. Uniformly transition elliptical section to a cylindrical section at the arm connection.

The fabricator may substitute elliptical cross sections other than those tabulated, provided the section properties about the vertical axis and the area of the section equal or exceed that of the required section, and provide minimum wall thickness of ⅛" nominal and within the Aluminum Association Tolerances.

The outside diameter about the minor axis should be held at 2⅜" at the upper and lower arms.

10/30/2018 2:57:49 PM

ARM & DAMPER DETAILS

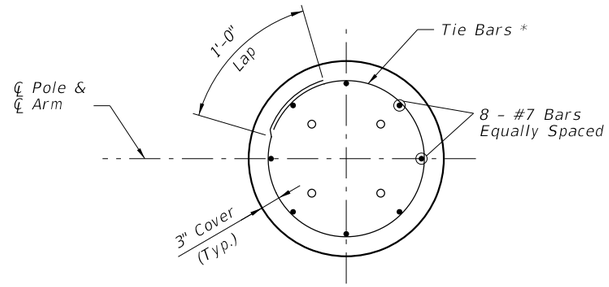

SECTION C-C

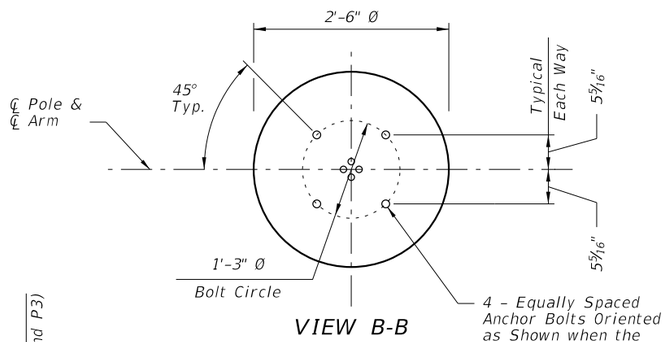

VIEW B-B

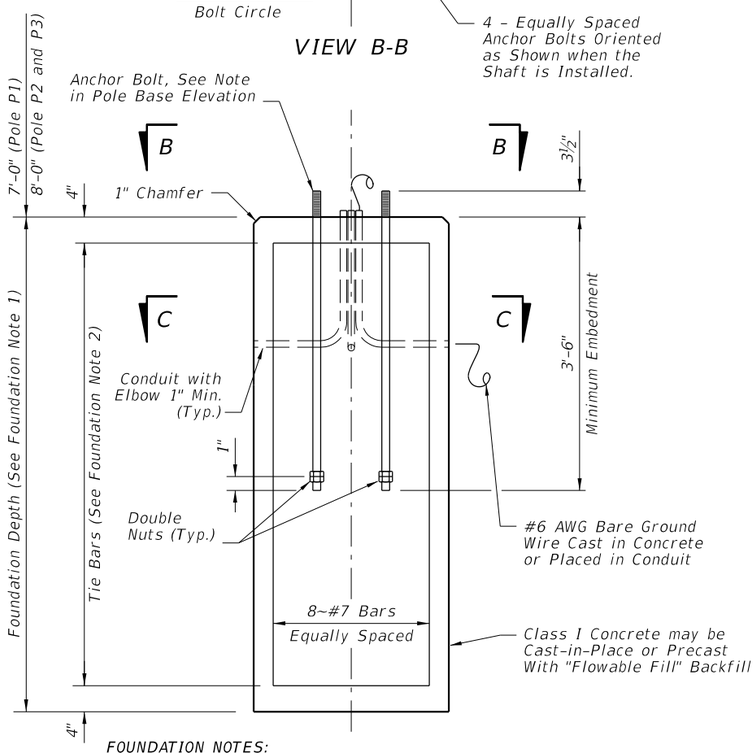

FOUNDATION NOTES:

1. Depths shown are for slopes flatter than 1:4, for slopes 1:2 or flatter, add 2'-6" to foundation depths shown.
2. Foundation Tie Bars: #4 Tie Bars @ 12" centers (max.) or D10 (or W10) spiral @ 6" pitch, 3 flat turns top and 1 flat turn bottom.

FOUNDATION

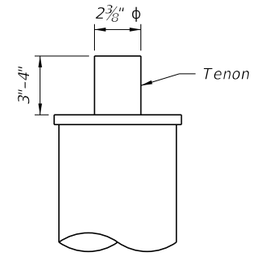

TOP MOUNT TENON

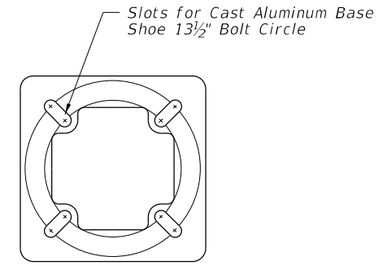

TOP VIEW
TRANSFORMER BASE

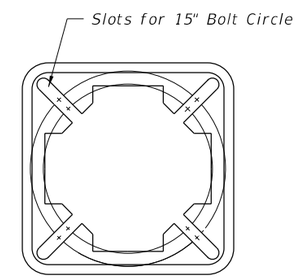

BOTTOM VIEW
TRANSFORMER BASE

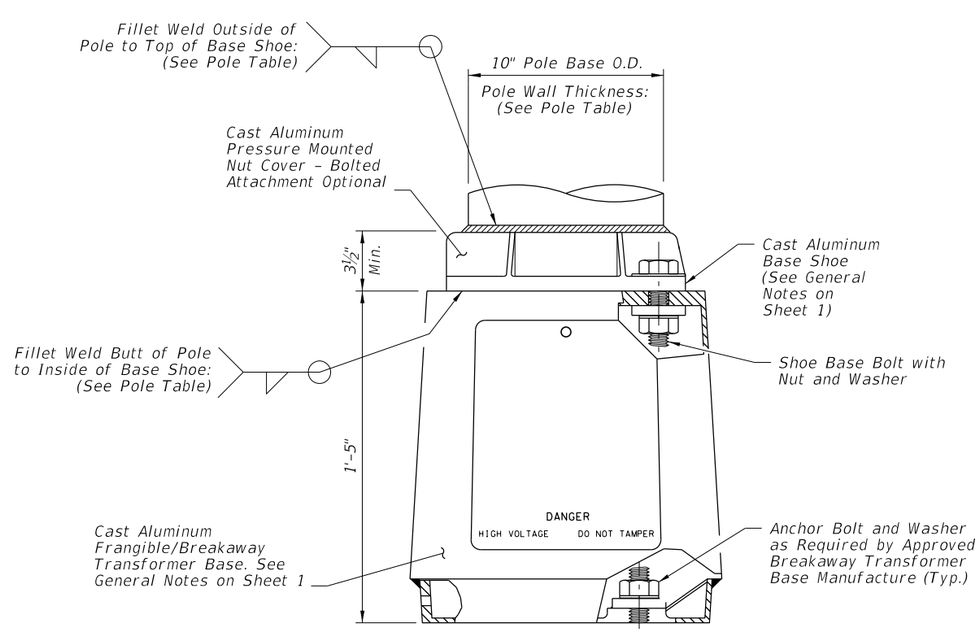

POLE BASE ELEVATION

ARM-POLE TABLE

FOR STANDARD ALUMINUM LIGHT POLES WITH ARM

Assembly Height (ft)	Wind Speed and Arm Lengths (ft)				
	120 mph	140 mph		160 mph	
	8, 10, 12, 15	8, 10, 12	15	8, 10	12, 15
30	A1-P1	A1-P1	A2-P1	A1-P1	A2-P1
35					
40				A1-P2	A2-P2
45	A1-P2	A1-P2	A2-P2		
50				A1-P3	A2-P3

ARM POLE NOTES:

1. See ARM SECTION detail on Sheet 3 for all A1 and A2 Values.
2. See Pole Table for all P1, P2, and P3 values.
3. For Median Barrier Mounted Pole, Use Arm A1.

POLE TABLE

Pole	Pole Wall Thickness	Top of Base Shoe Weld	Inside of Base Shoe Weld
P1	0.156	3/16"	5/32"
P2	0.250	1/4"	1/4"
P3	0.313	5/16"	5/16"

POLE NOTES:

1. Pole wall thicknesses shown are nominal and must be within the Aluminum Association tolerances.
2. Thicker walls are permitted and tapered walls may be used in accordance with the minimum Aluminum Association thicknesses.

TOP MOUNT POLE TABLE

FOR STANDARD ALUMINUM LIGHT POLES WITH TOP MOUNT

Assembly Height (ft)	Wind Speed and Arm Lengths (ft)		
	120 mph	140 mph	160 mph
30	Pole P1	Pole P1	Pole P1
35			
40			Pole P2
45	Pole P2	Pole P2	
50			

POLE AND BASE DETAILS FOR ROADWAY ALUMINUM LIGHT POLE

LAST REVISION	REVISION	DESCRIPTION:			INDEX	SHEET
04/03/18			FY 2019-20 STANDARD PLANS	STANDARD ALUMINUM LIGHTING	715-002	4 of 8

10/30/2018 2:57:52 PM

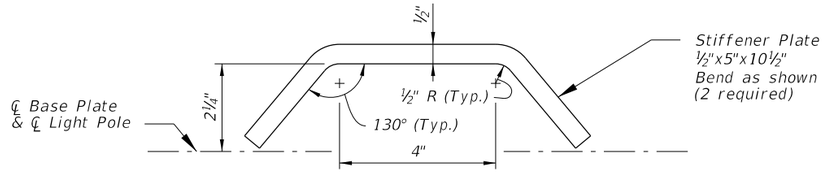

STIFFENER PLATE DETAIL

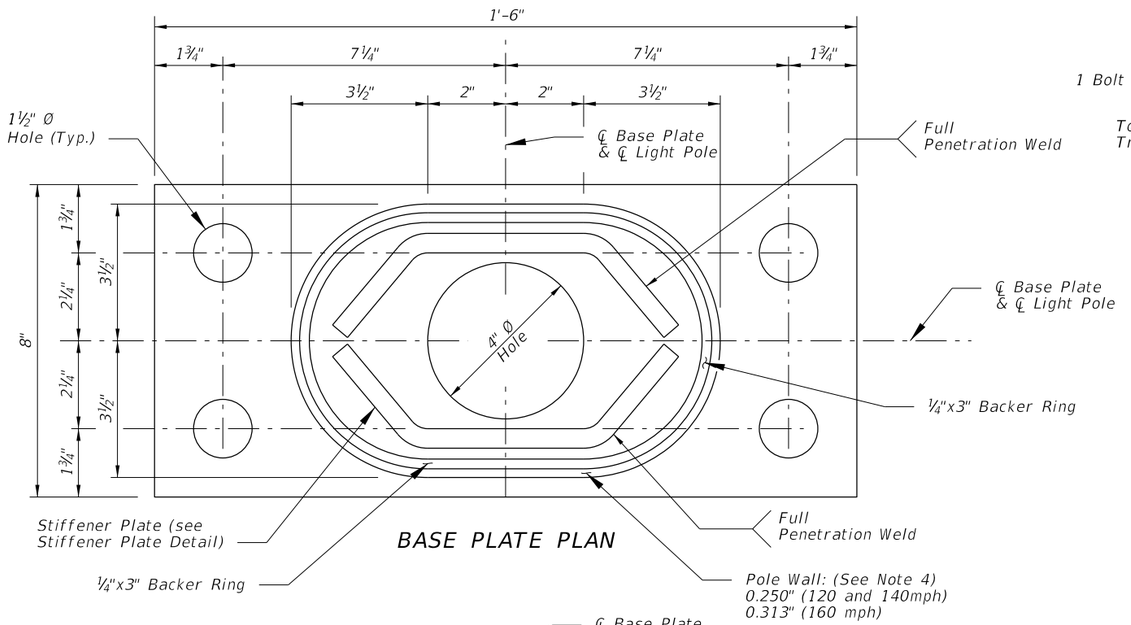

BASE PLATE PLAN

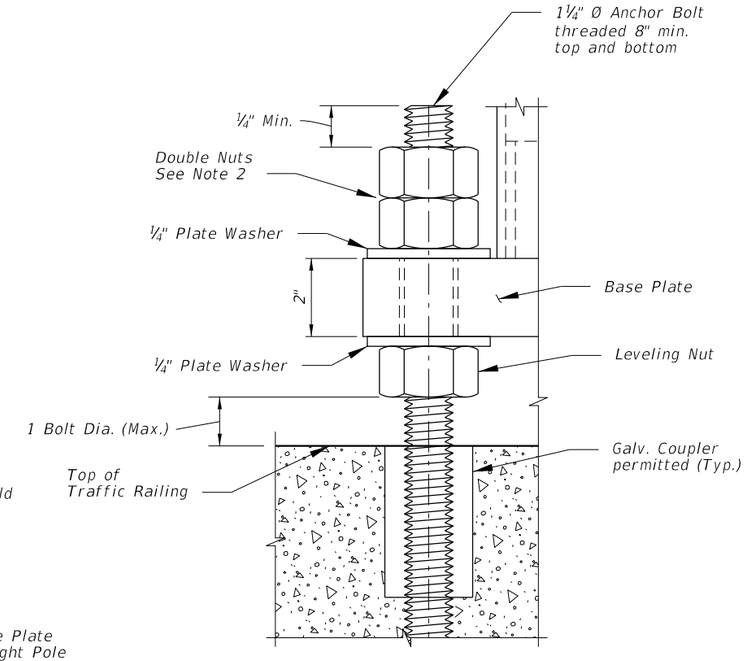

DETAIL 'A'

NOTE:

1. For locations of Bearing Plates, Base Plates and Detail 'A' see Sheets 6 & 7.
2. Double Nuts: The bottom hex nut may be substituted by a half-height 'jam' nut.
3. Provide individual nut covers (not shown) for each bolt.
4. Pole wall thicknesses shown are nominal and shall be within the Aluminum Association Tolerances. Thicker walls are permitted and tapered walls may be used in accordance with the minimum Aluminum Association thicknesses.

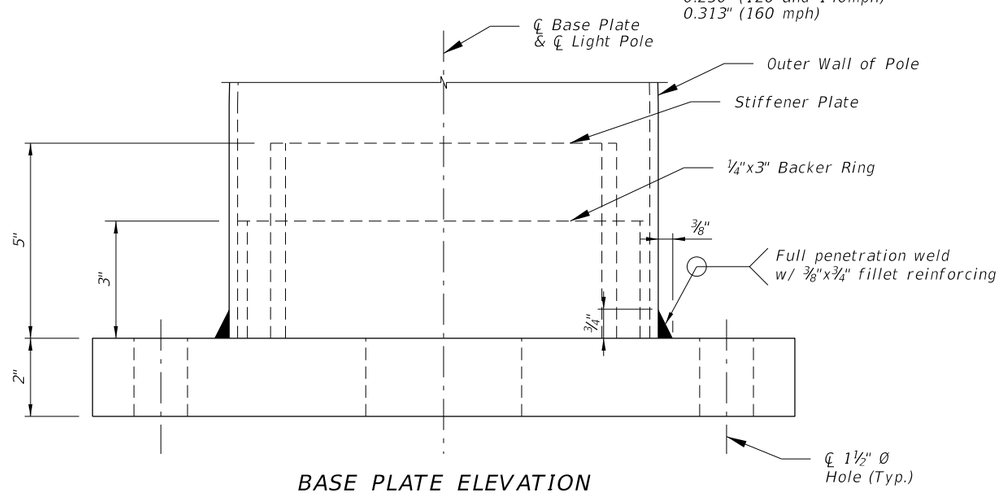

BASE PLATE ELEVATION

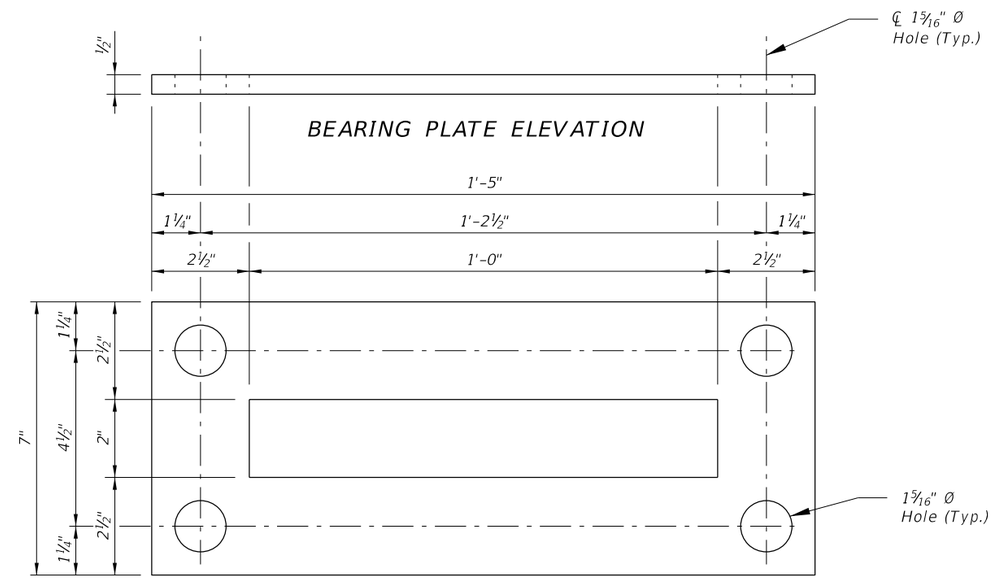

BEARING PLATE ELEVATION

BEARING PLATE PLAN

BASE PLATE DETAILS FOR MEDIAN BARRIER MOUNTED ALUMINUM LIGHT POLE

LAST REVISION	REVISION	DESCRIPTION:			INDEX	SHEET
04/03/18			FDOT FY 2019-20 STANDARD PLANS	STANDARD ALUMINUM LIGHTING	715-002	5 of 8

10/30/2018 2:57:56 PM

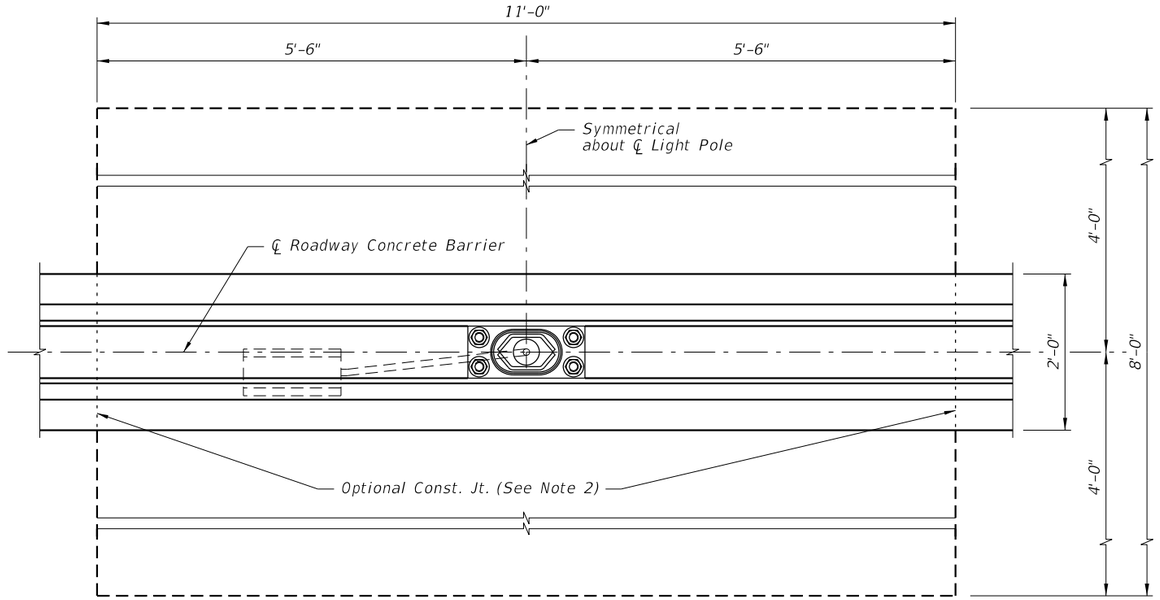

PLAN
(Reinforcing steel not shown)

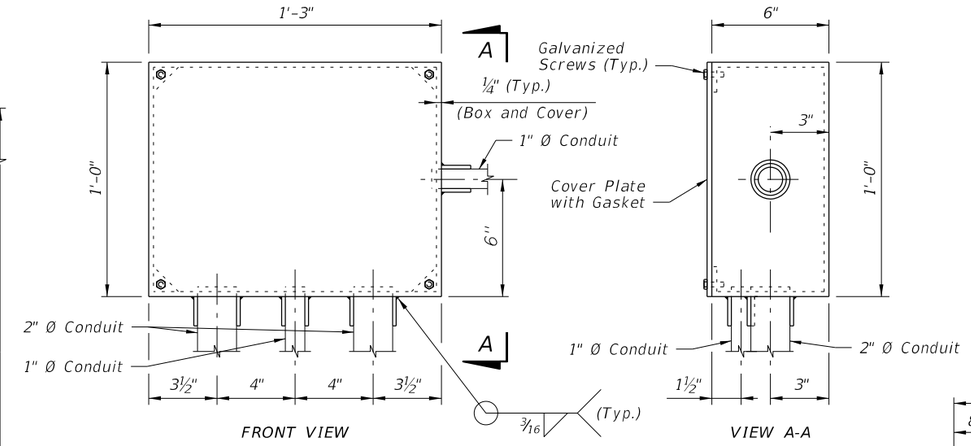

EMBEDDED JUNCTION BOX DETAILS

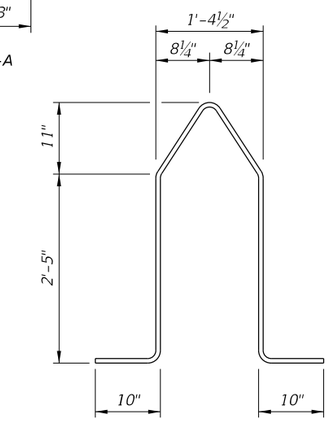

BAR 5W1

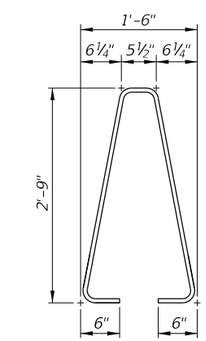

BAR 5V

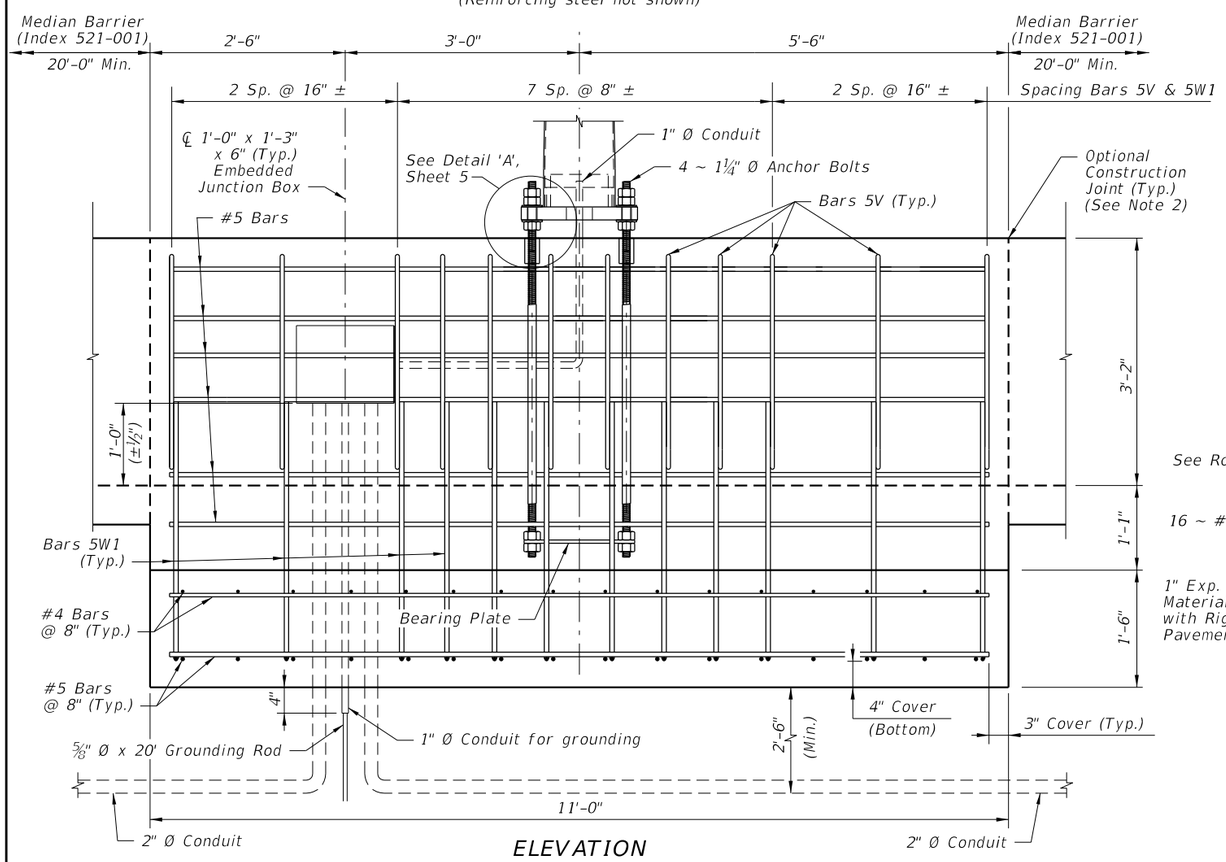

ELEVATION

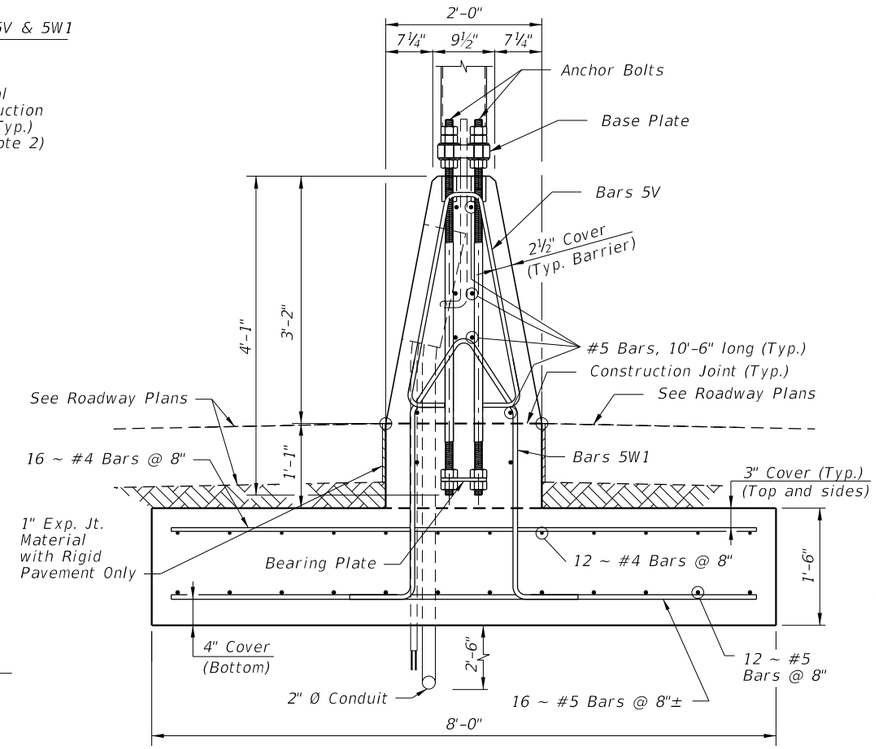

END VIEW

NOTES:

1. For Bearing Plate and Base Plate Details, see Sheet 5.
2. For connections to adjacent Median Barrier, use the Doweled Joint detail per Index 521-001. Alternatively, a continuous concrete pour or a construction joint may be substituted; these alternatives require the Median Barrier's longitudinal steel to lap a minimum of 2'-0" with the longitudinal steel shown herein.

SPREAD FOOTING DETAILS FOR MEDIAN BARRIER MOUNTED ALUMINUM LIGHT POLE

10/30/2018 2:57:59 PM

LAST REVISION	REVISION	DESCRIPTION:			INDEX	SHEET
11/01/17			FY 2019-20 STANDARD PLANS	STANDARD ALUMINUM LIGHTING	715-002	6 of 8

FOUNDATION TABLE		
WIND SPEED (MPH)	DESIGN MOUNTING HEIGHT (FT)	FOUNDATION DEPTH (FT)
120	40	8
140	40	9
160	40	9

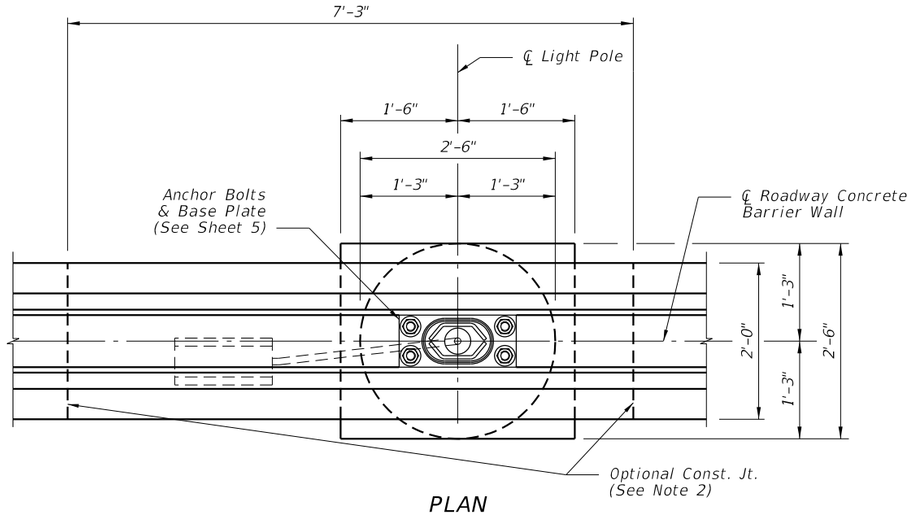

PLAN
(Reinforcing steel not shown)
Provide dowel bars @ construction joint

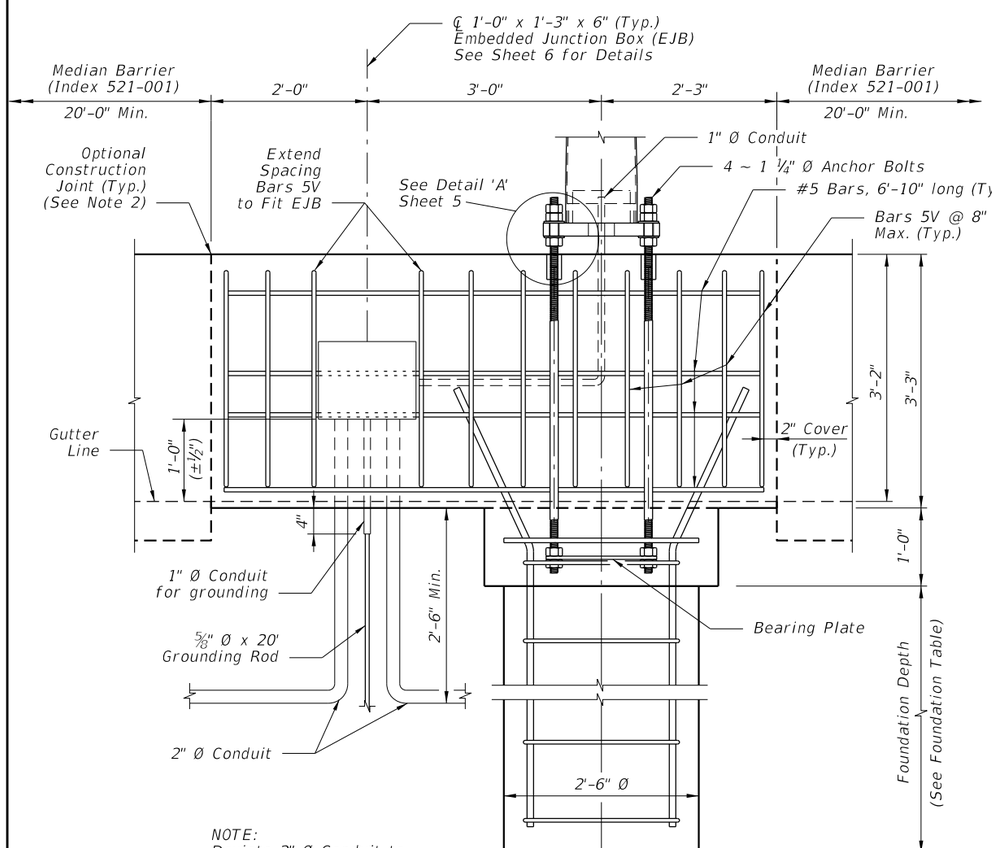

NOTE:
Deviate 2" Ø Conduit to avoid cylindrical foundation.

ELEVATION

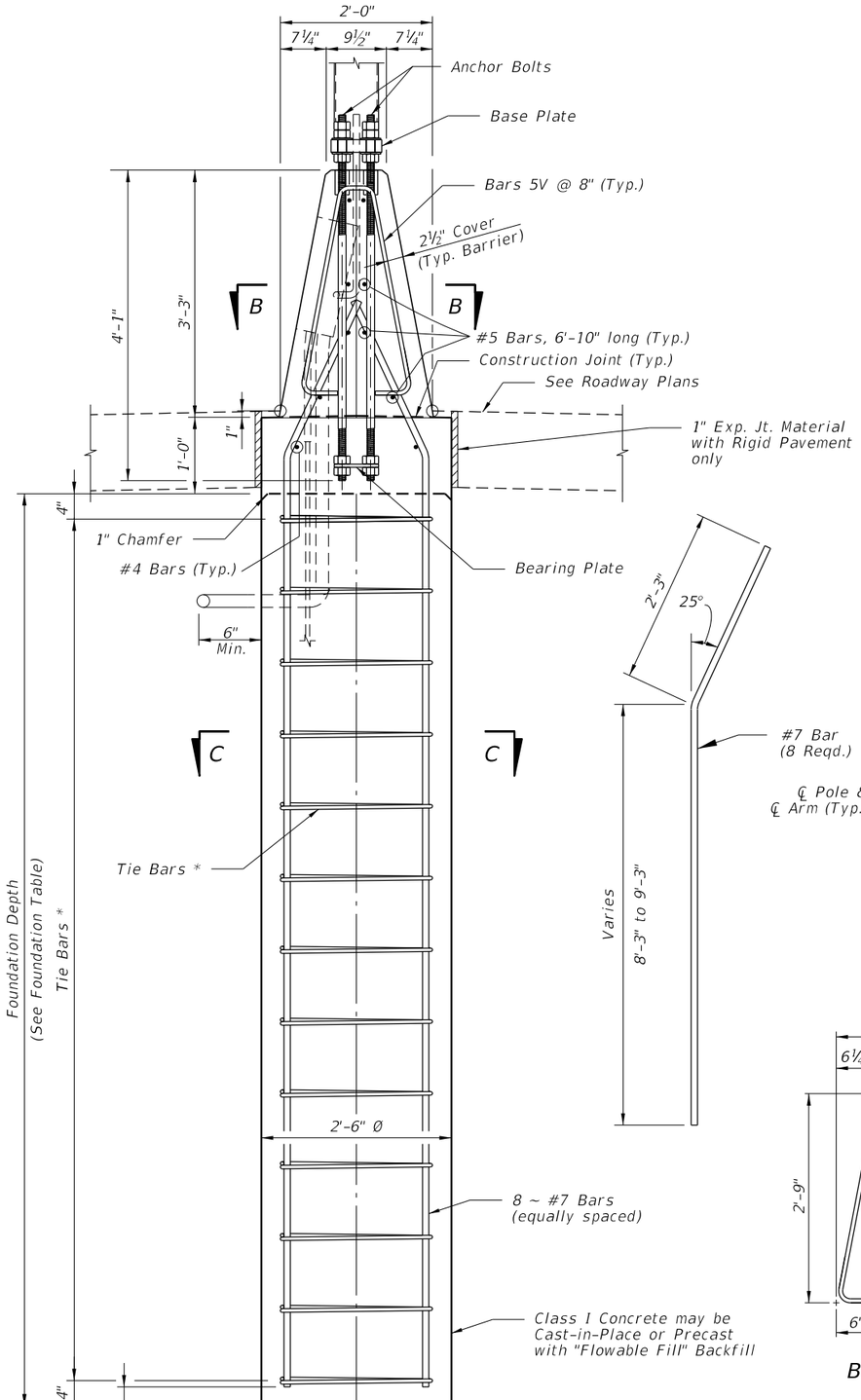

END VIEW

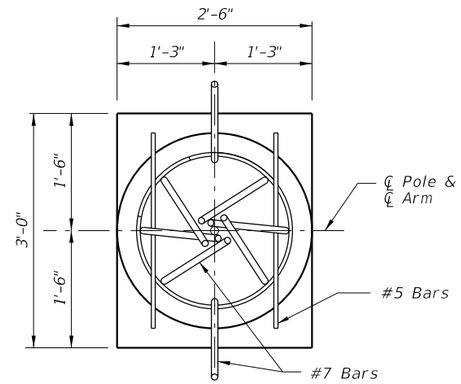

VIEW B-B
(Anchor Bolts and Barrier Longitudinal Steel & Stirrups Not Shown)

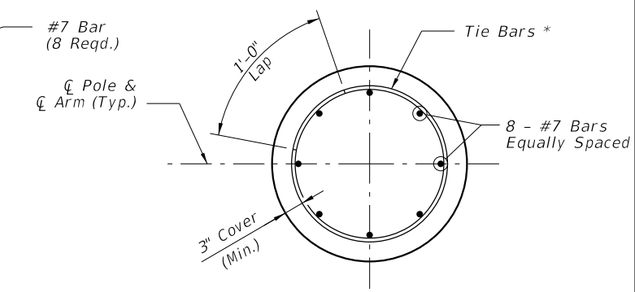

SECTION C-C

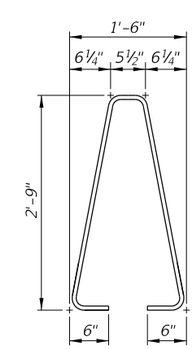

BAR 5V

NOTES:

1. For Bearing Plate and Base Plate Details, see Sheet 5.
2. For connections to adjacent Median Barrier, use the Doweled Joint detail per Index 521-001. Alternatively, a continuous concrete pour or a construction joint may be substituted; these alternatives require the Median Barrier's longitudinal steel to lap a minimum of 2'-0" with the longitudinal steel shown herein.

* #4 Tie Bars @ 12" centers (max.) or D10 (or W10) spiral @ 6" pitch, 3 flat turns top and 1 flat turn bottom.

CYLINDRICAL FOUNDATION DETAILS FOR MEDIAN BARRIER MOUNTED ALUMINUM LIGHT POLE

10/30/2018 2:58:02 PM

LAST REVISION	REVISION	DESCRIPTION:			INDEX	SHEET
11/01/17			FY 2019-20 STANDARD PLANS	STANDARD ALUMINUM LIGHTING	715-002	7 of 8

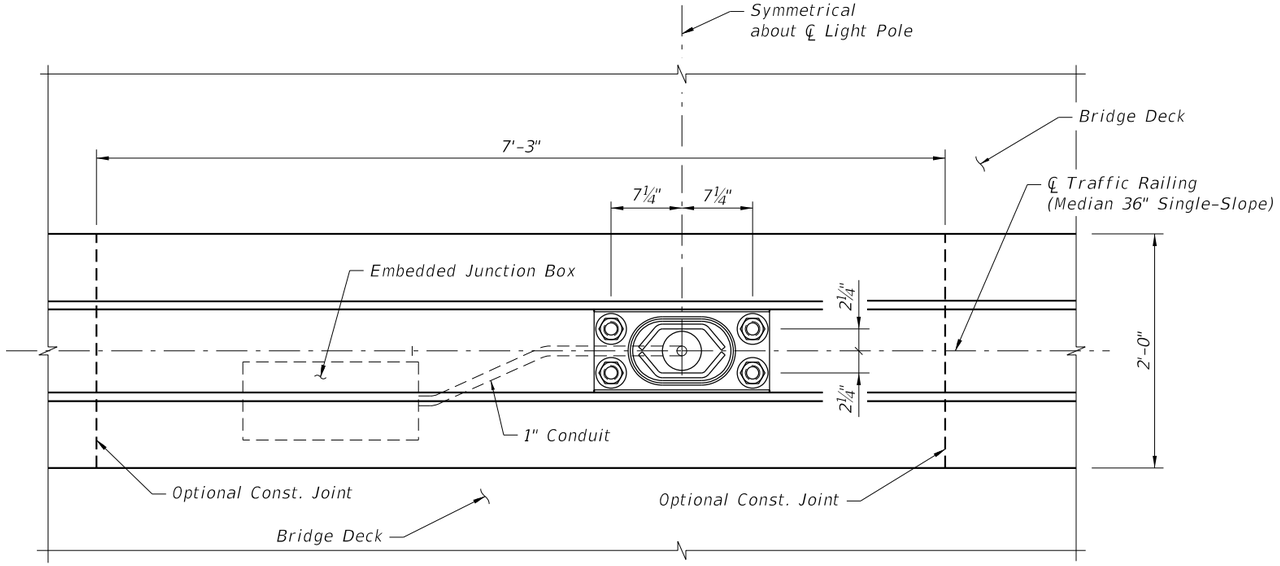

PLAN
(Reinforcing steel and 2" Ø Conduit not shown)

*At the Contractor's option, Bars 5W may be fabricated as a two piece bar with a 1'-2" lap splice at the bottom legs.

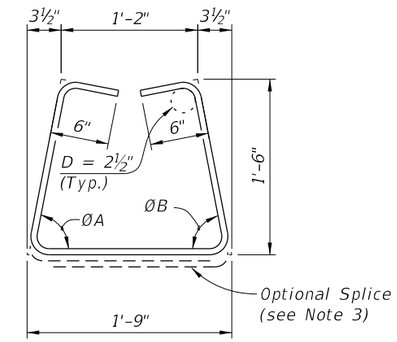

BAR 5W*

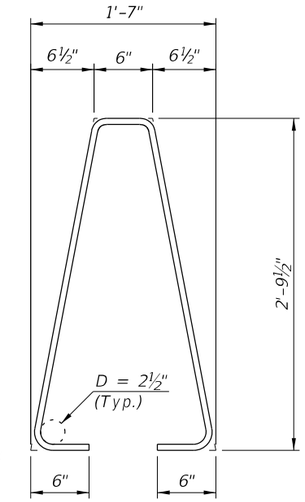

BAR 5R

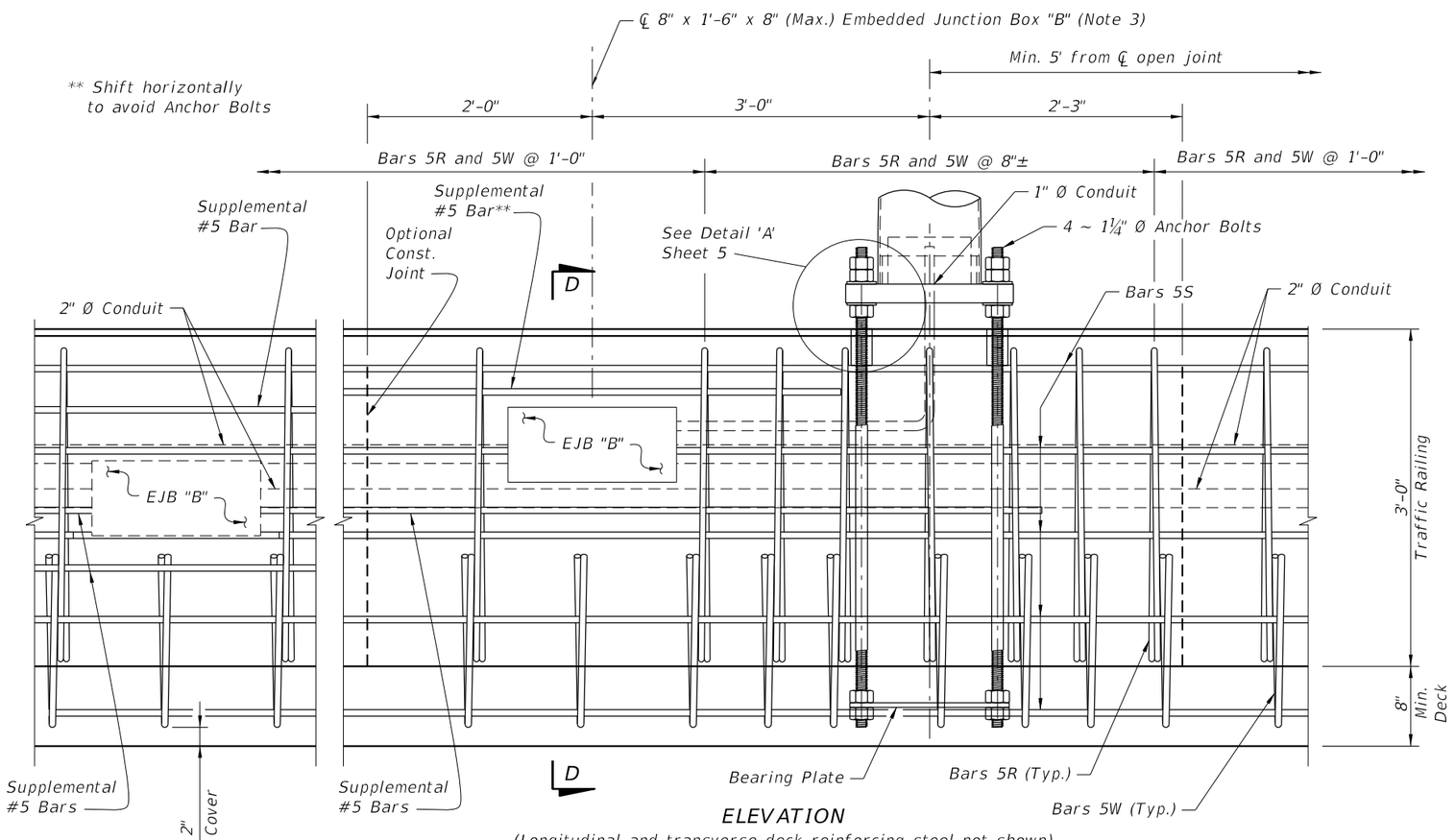

ELEVATION
(Longitudinal and transverse deck reinforcing steel not shown)

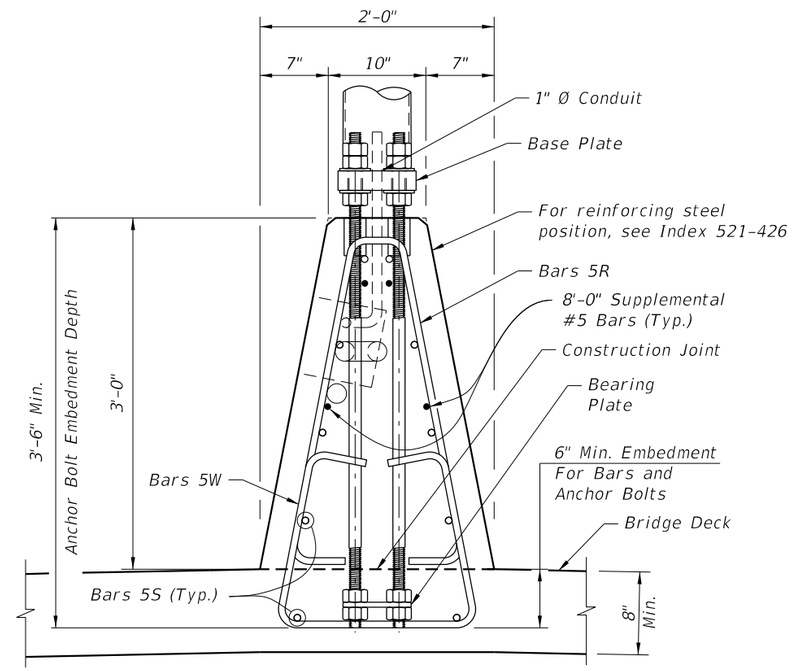

SECTION D-D
(Longitudinal and transverse deck reinforcing steel not shown)

NOTES:

1. For Base Plate Details, Bearing Plate Details, and Detail 'A', see Sheet 5.
2. See Index 521-426 for details of adjacent Traffic Railing (Median 36" Single-Slope) and for angles ∅A and ∅B.
3. See Index 630-010 for Conduit, EJB and supplemental reinforcing details.

DETAILS FOR TRAFFIC RAILING (MEDIAN 36" SINGLE-SLOPE) MOUNTED ALUMINUM LIGHT POLE