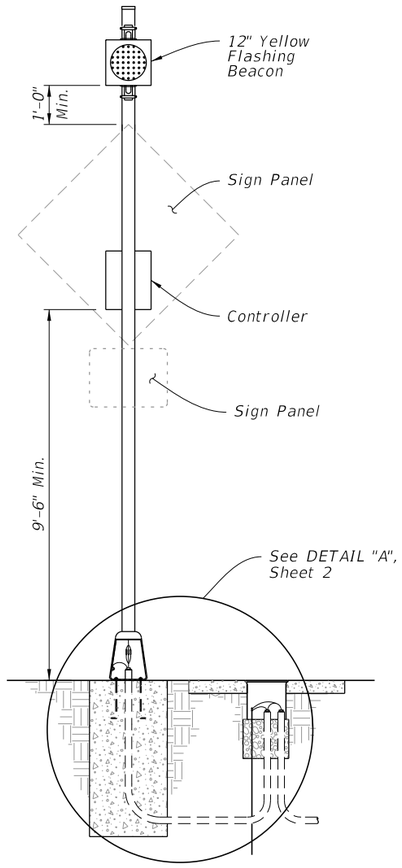

FRONT VIEW

POWER CONFIGURATION 'A'
CONVENTIONALLY-POWERED
(Type A1 Shown)

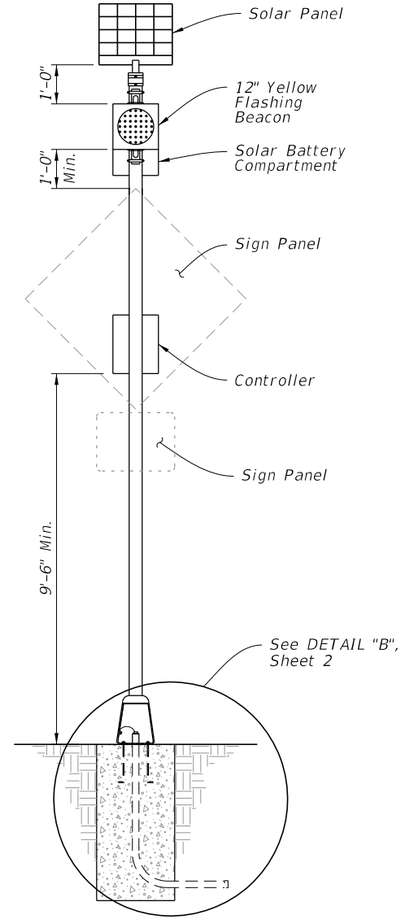

FRONT VIEW

WITHOUT AUXILIARY POLE

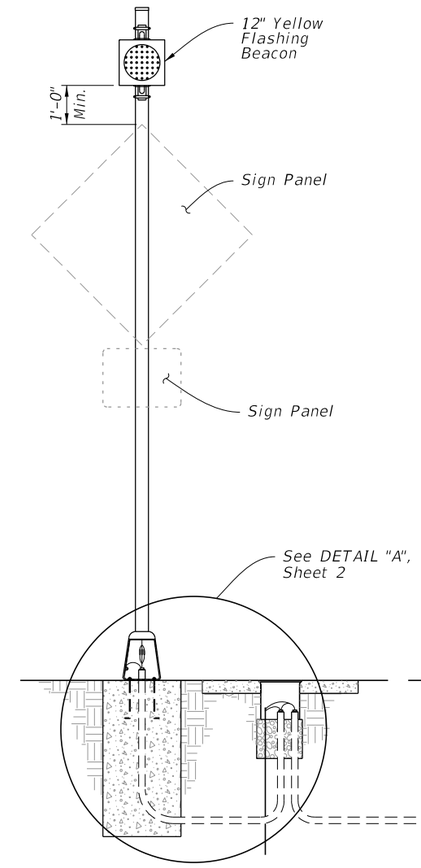

SIGN ASSEMBLY
FRONT VIEW

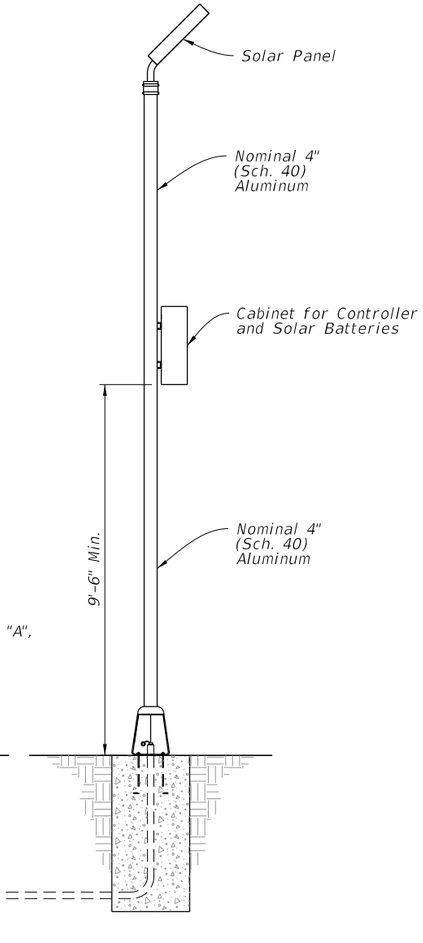

AUXILIARY POLE

WITH AUXILIARY POLE

POWER CONFIGURATION 'B'
SOLAR-POWERED
(Type B1 Shown)

GENERAL NOTES:

1. Install sign assemblies based on Alpha-Numeric Type designation shown in the Plans (e.g., Type A1). Assembly Type is based on Power Configuration 'Alpha' Identification shown above and Numerical Identification shown on Sheet 3 thru 8.
2. Install sign panel and wind beam in accordance with Index 700-010 and Specification 700.
3. Engage all threads on the transformer base and post unless the aluminum post is fully seated into base.
4. Meet the requirements of Specification 646 for aluminum poles and transformer bases.
5. Install a concrete slab around all flashing beacon assemblies on slopes 6:1 or greater. The minimum slab dimension is 4'-0" by 5'-0".
6. When wire entry holes are drilled in the sign column, use a bushing or rubber grommet to protect conductors.

POWER CONFIGURATION 'B' NOTES:

1. Install a separate pole for mounting the solar panel, controller and batteries for all flashing beacon assemblies with solar panels, controllers and batteries weighing more than 170 lbs.
2. Install the auxiliary pole as close to the right of way boundary as possible.
3. Install the auxiliary pole so that the height is the same as the column for the beacon assembly.
4. Orient solar panel to face South for optimal exposure to sunlight.
5. The controller and the solar batteries may be located in the same compartment.

TABLE OF CONTENTS:

Sheet	Description
1	General Notes and Contents
2	Conduit, Wiring, and Foundation Details
3	Roadside Sign Assembly-1
4	Roadside Sign Assembly-2
5	Roadside Sign Assembly-3
6	Roadside Sign Assembly-4
7	Roadside Sign Assembly-5
8	Roadside Sign Assembly-6
9	Overhead Sign Assembly

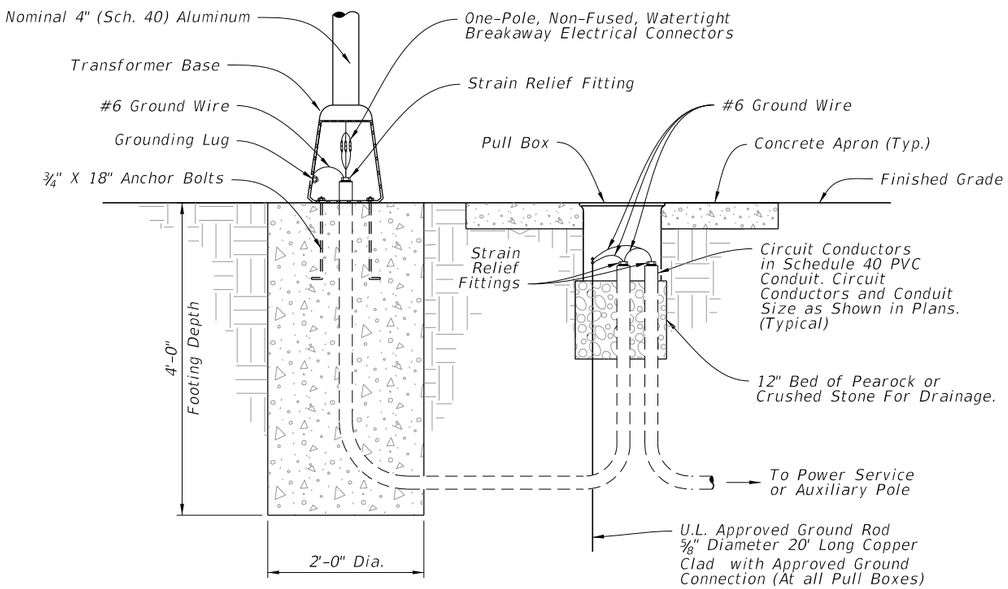

DETAIL "A"

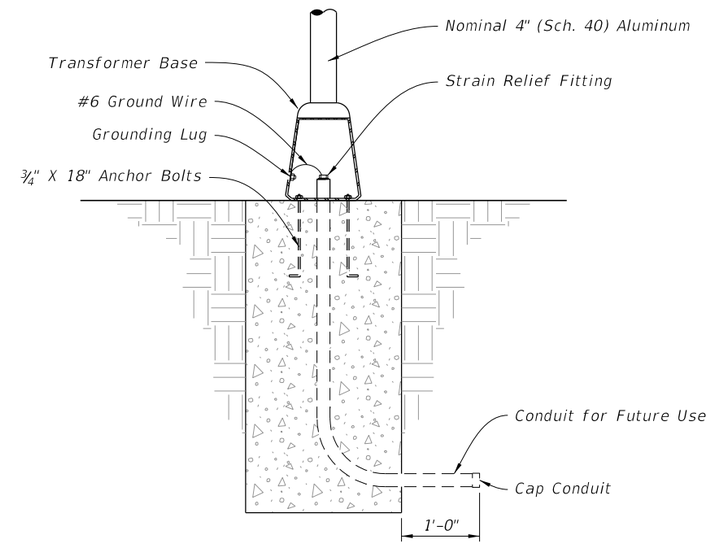

DETAIL "B"

CONDUIT, WIRING, AND FOUNDATION DETAILS

LAST REVISION	REVISION	DESCRIPTION:			INDEX	SHEET
11/01/18			FDOT FY 2019-20 STANDARD PLANS	ENHANCED HIGHWAY SIGNING ASSEMBLIES	700-120	2 of 9

10/18/2018 1:02:01 PM

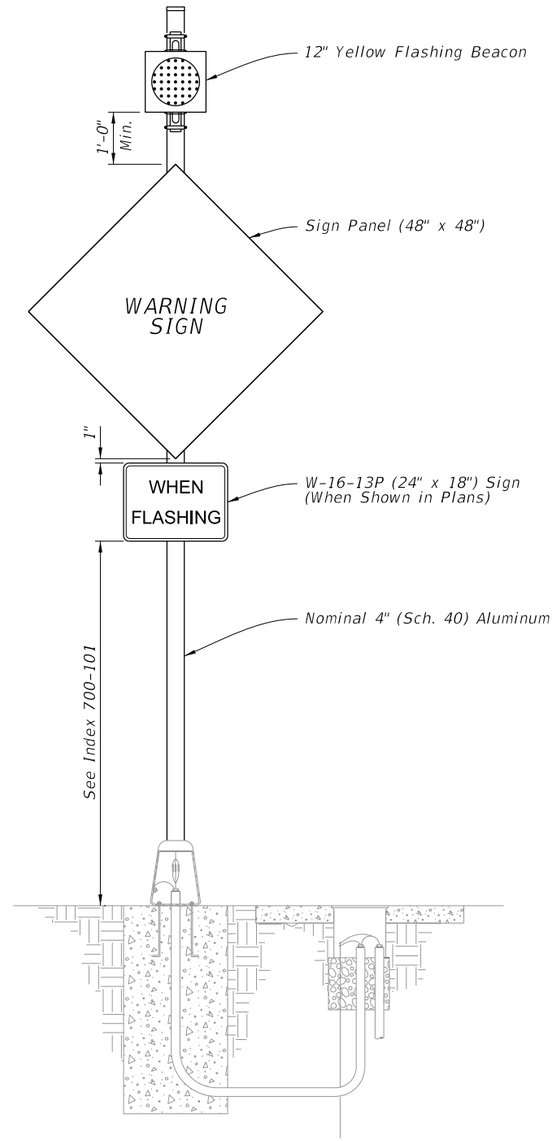

FRONT VIEW

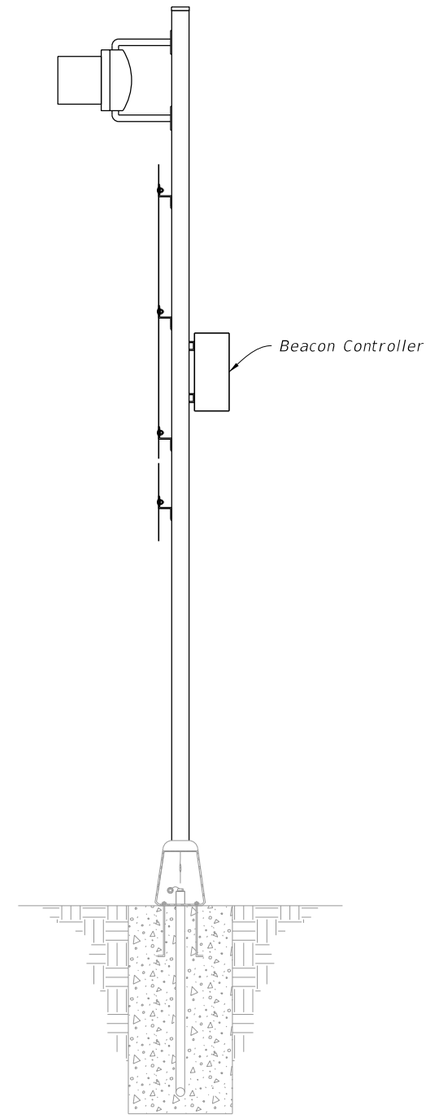

SIDE VIEW

NOTE:

Type A1 Assembly (conventionally-powered) is shown.
Type B1 Assemblies (solar-powered) similar.

ROADSIDE SIGN ASSEMBLY-1

LAST REVISION	REVISION	DESCRIPTION:			INDEX	SHEET
11/01/18			FY 2019-20 STANDARD PLANS	ENHANCED HIGHWAY SIGNING ASSEMBLIES	700-120	3 of 9

10/18/2018 1:02:01 PM

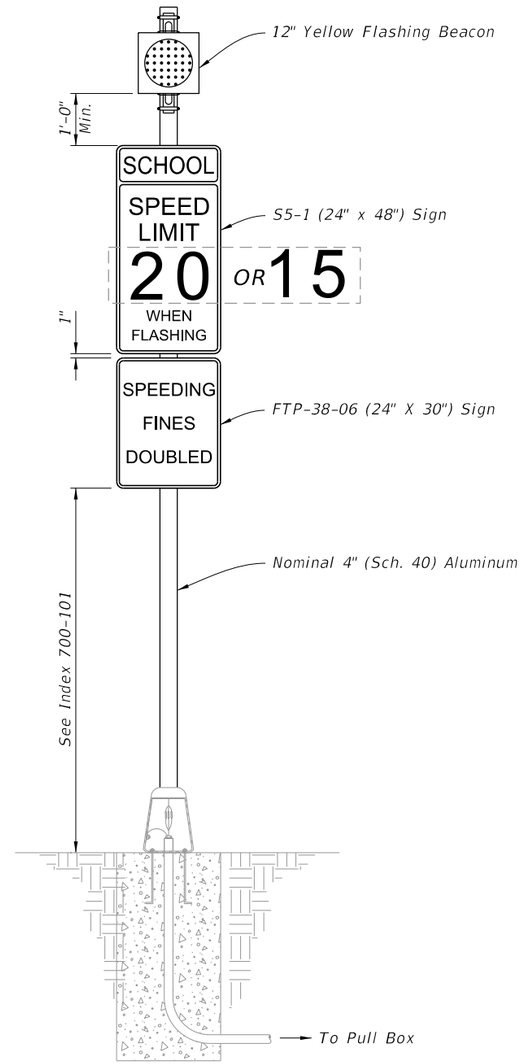

FRONT VIEW

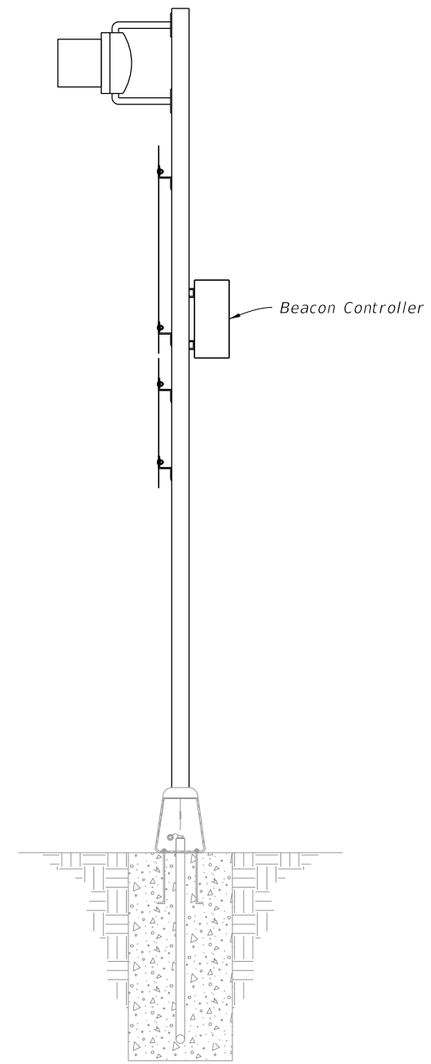

SIDE VIEW

NOTE:

Type A2 Assembly (conventionally-powered) is shown.
Type B2 Assemblies (solar-powered) similar.

ROADSIDE SIGN ASSEMBLY-2

LAST REVISION	REVISION	DESCRIPTION:	FY 2019-20 STANDARD PLANS	ENHANCED HIGHWAY SIGNING ASSEMBLIES	INDEX	SHEET
11/01/18					700-120	4 of 9

10/18/2018 1:02:02 PM

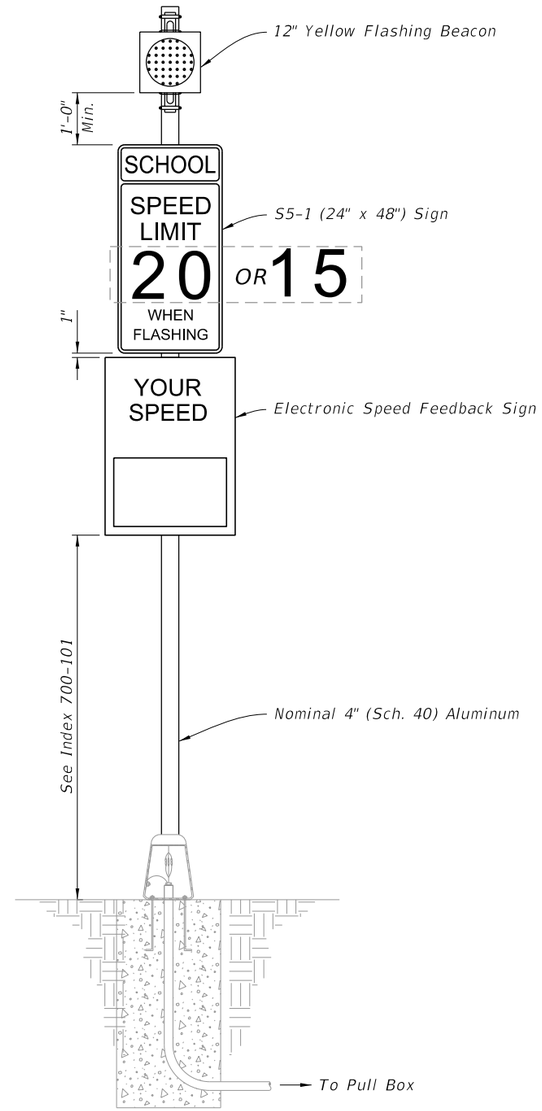

FRONT VIEW

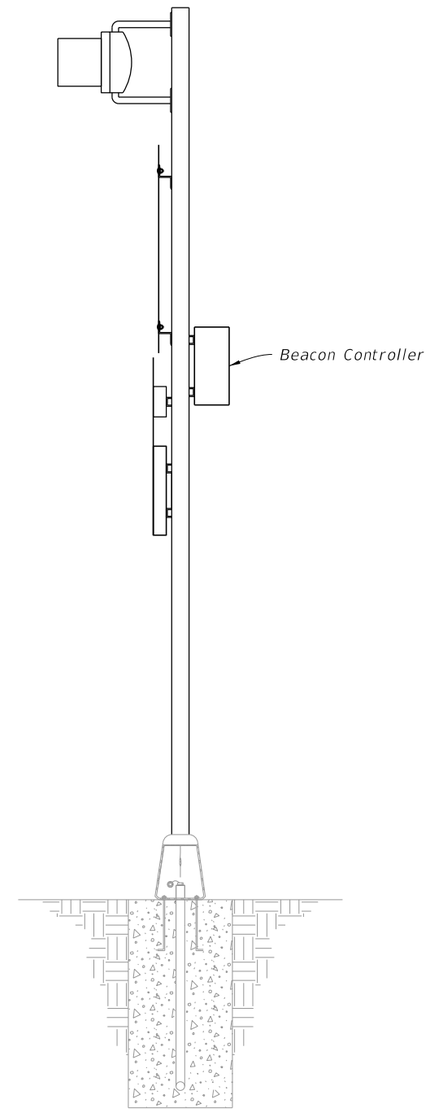

SIDE VIEW

NOTES:

1. Type A3 Assembly (conventionally-powered) is shown. Type B3 Assemblies (solar-powered) similar.

2. Use electronic speed feedback sign with 15" high numerals for posted speed of 45 mph or less, and 18" high numerals for posted speeds greater than 45 mph.

ROADSIDE SIGN ASSEMBLY-3

LAST REVISION	REVISION	DESCRIPTION:	FY 2019-20 STANDARD PLANS	ENHANCED HIGHWAY SIGNING ASSEMBLIES	INDEX	SHEET
11/01/18					700-120	5 of 9

10/18/2018 1:02:02 PM

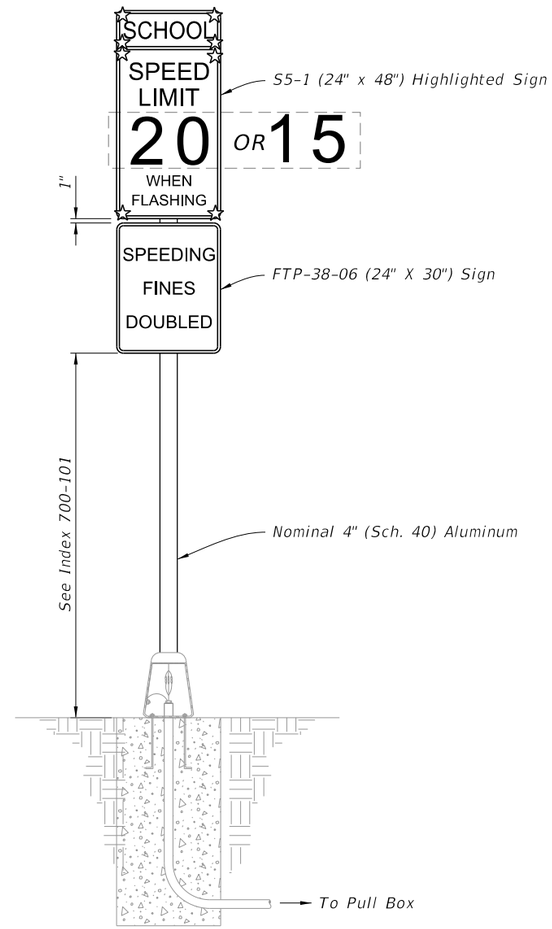

FRONT VIEW

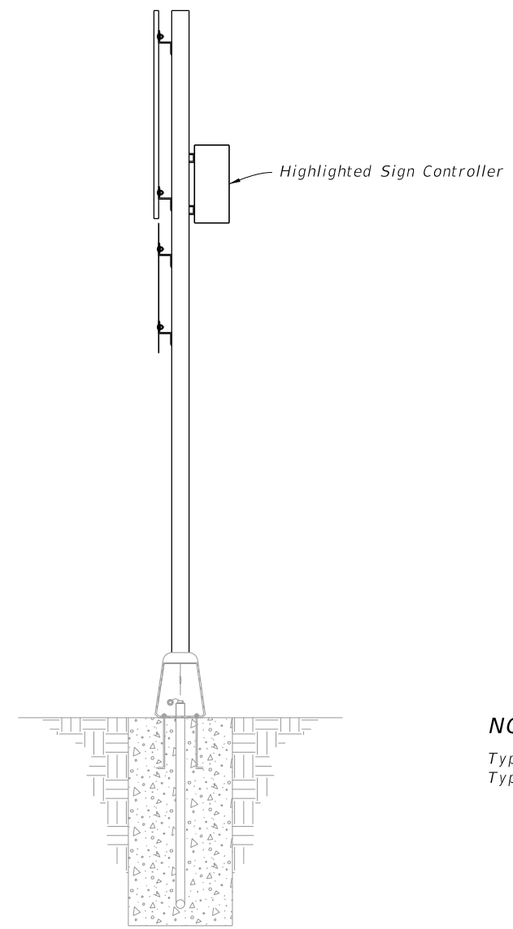

SIDE VIEW

NOTE:

Type A4 Assembly (conventionally-powered) is shown.
Type B4 Assemblies (solar-powered) similar.

ROADSIDE SIGN ASSEMBLY-4

LAST REVISION	REVISION	DESCRIPTION:			INDEX	SHEET
11/01/18			FY 2019-20 STANDARD PLANS	ENHANCED HIGHWAY SIGNING ASSEMBLIES	700-120	6 of 9

10/18/2018 1:02:02 PM

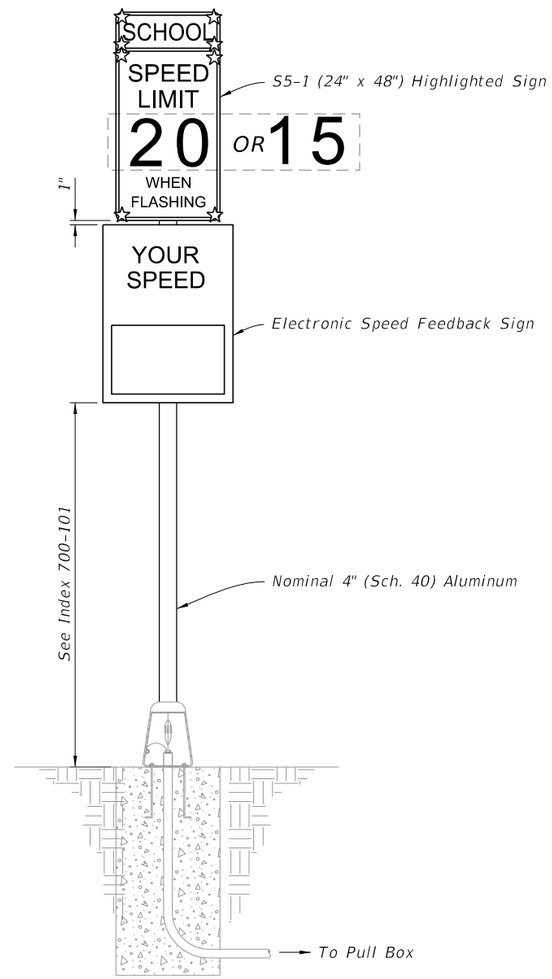

FRONT VIEW

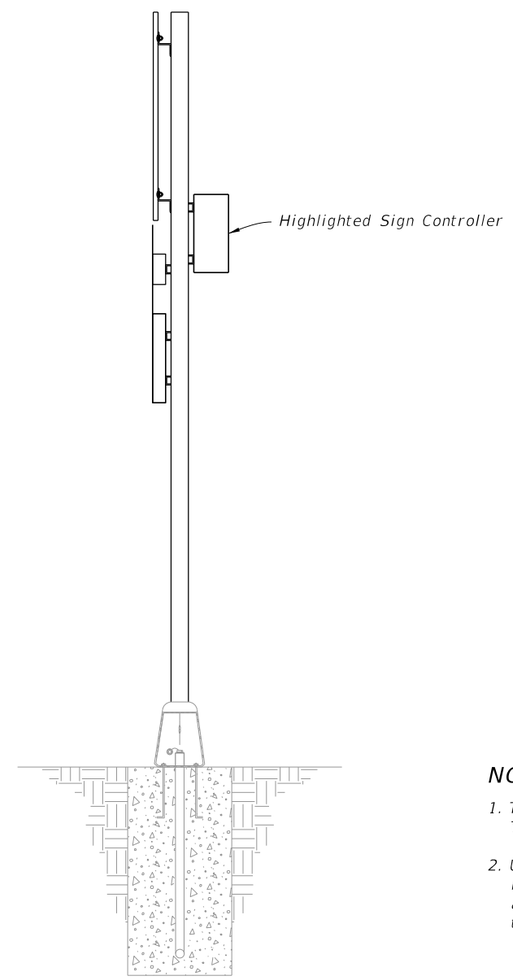

SIDE VIEW

NOTES:

1. Type A5 Assembly (conventionally-powered) is shown. Type B5 Assemblies (solar-powered) similar.

2. Use electronic speed feedback sign with 15" high numerals for posted speed of 45 mph or less, and 18" high numerals for posted speeds greater than 45 mph.

ROADSIDE SIGN ASSEMBLY-5

LAST REVISION	REVISION	DESCRIPTION:			INDEX	SHEET
11/01/18			FY 2019-20 STANDARD PLANS	ENHANCED HIGHWAY SIGNING ASSEMBLIES	700-120	7 of 9

10/18/2018 1:02:03 PM

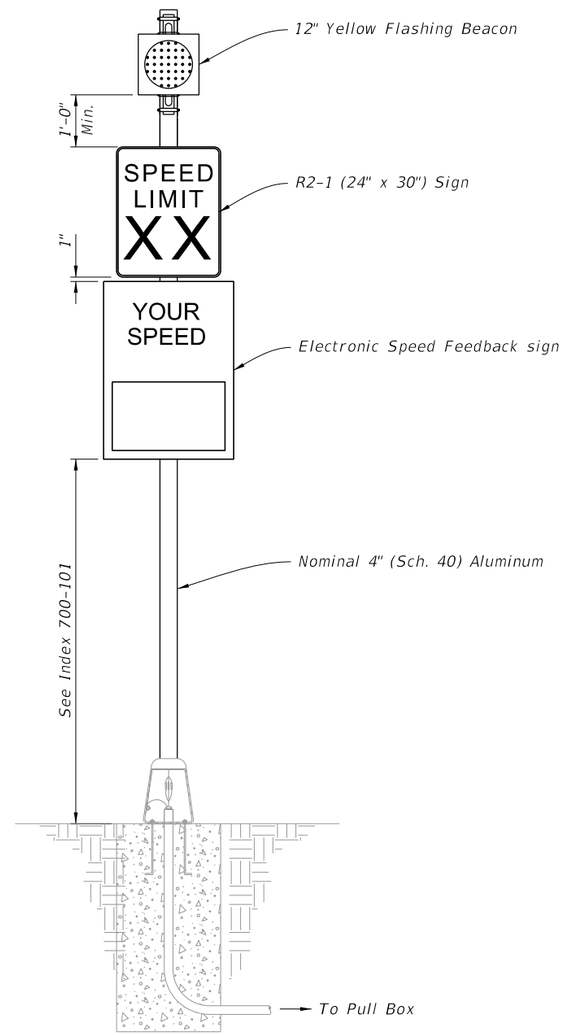

FRONT VIEW

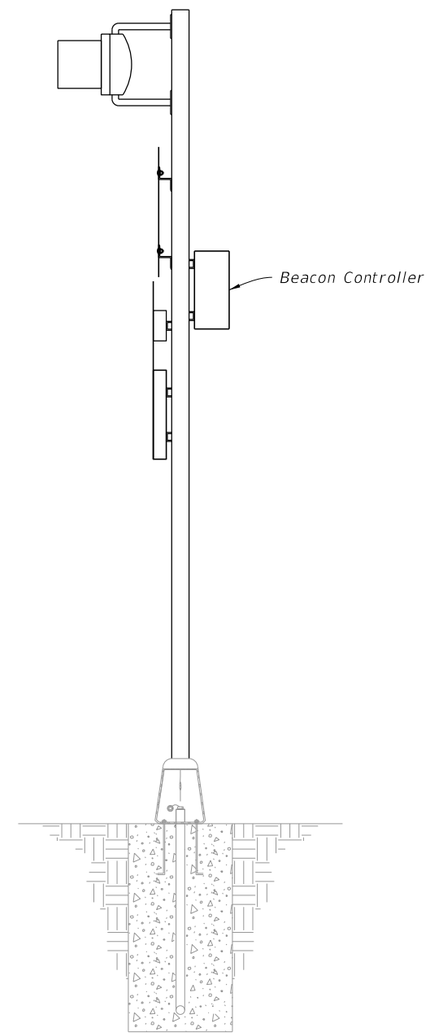

SIDE VIEW

NOTES:

1. Type A6 Assembly (conventionally-powered) is shown. Type B6 Assemblies (solar-powered) similar.

2. Use electronic speed feedback sign with 15" high numerals for posted speed of 45 mph or less, and 18" high numerals for posted speeds greater than 45 mph.

ROADSIDE SIGN ASSEMBLY-6

LAST REVISION	REVISION	DESCRIPTION:	FDOT	FY 2019-20 STANDARD PLANS	ENHANCED HIGHWAY SIGNING ASSEMBLIES	INDEX	SHEET
11/01/18						700-120	8 of 9

10/18/2018 1:02:03 PM

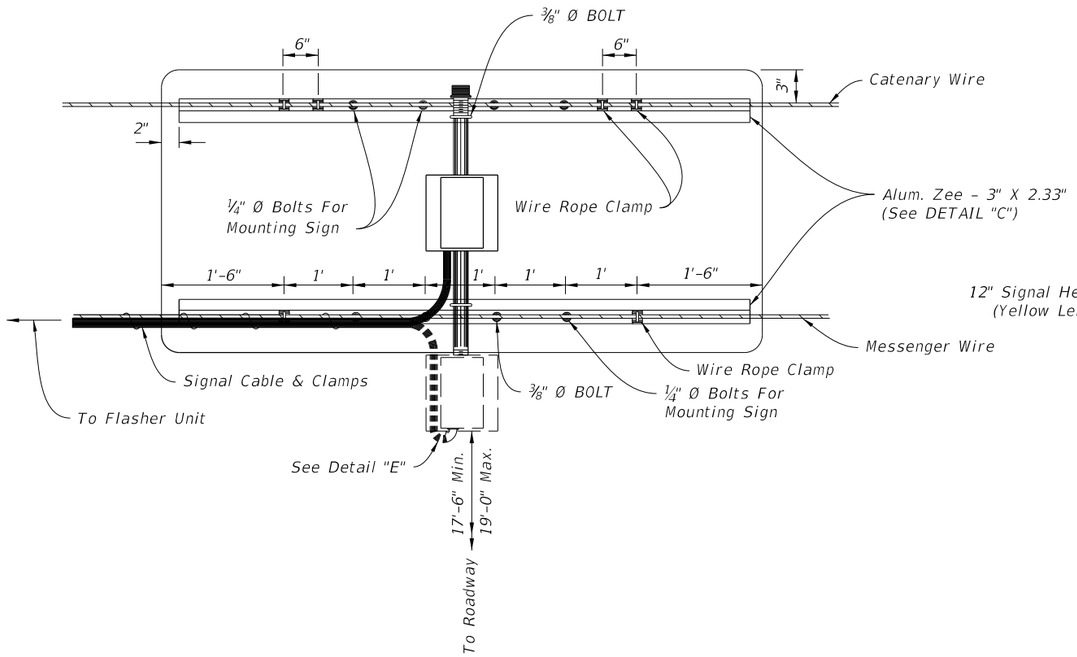

REAR VIEW

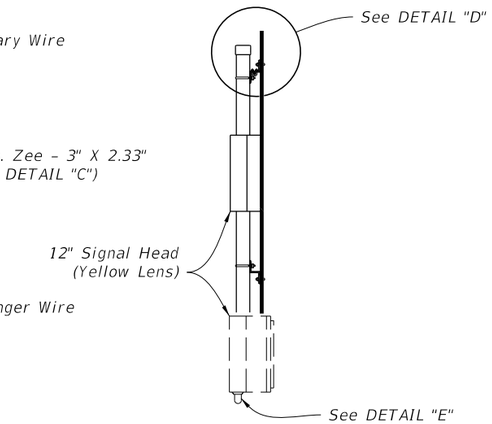

SIDE VIEW

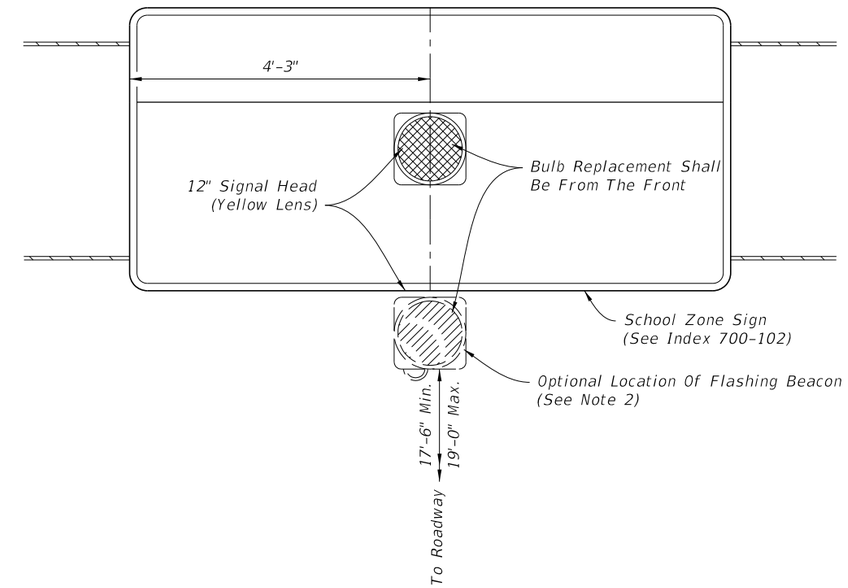

FRONT VIEW

OVERHEAD SCHOOL SIGN ASSEMBLY

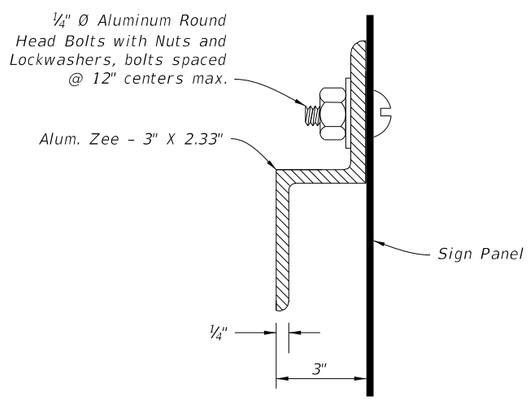

ZEE SECTION DETAIL

DETAIL "C"

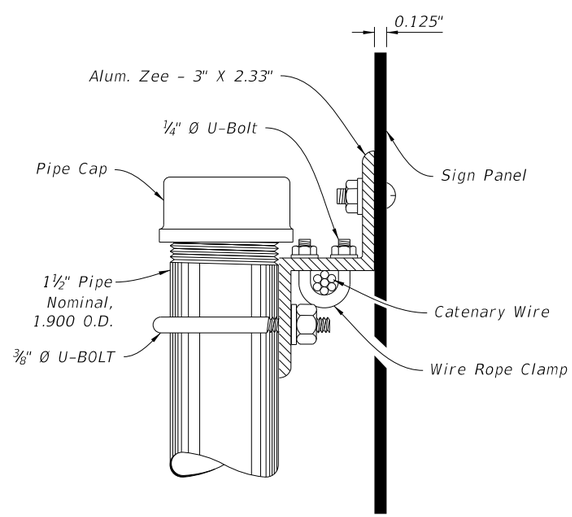

MOUNTING DETAIL

DETAIL "D"

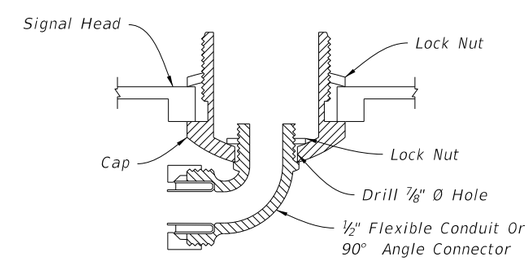

CABLE ENTRY DETAIL

DETAIL "E"

NOTES:

1. Flasher unit and cabinet to be placed on the strain pole supporting overhead sign assembly or on service pole. The flasher unit not to overhang private property or sidewalk.
2. Optional flashing beacon will be called for in the Plans. They may be placed within or below the panel, or face to the rear.

OVERHEAD SIGN ASSEMBLY