GENERAL NOTES:

1. Work this Index with Specification 649.

2. This Index is considered fully detailed; only submit shop drawings for minor modifications not detailed in the Plans.

3. Materials:
   A. Pole: ASTM A1011 Grade 50, 55, 60 or 65 (less than ¼") or ASTM A572 Grade 50, 60 or 65 (greater than or equal to ¼") or ASTM A595 Grade A (55 ksi yield) or Grade B (60 ksi yield).
   B. Steel Plates and Pole Cap: ASTM A36 or ASTM A709 Grade 50.
   C. Weld Metal: E70XX.
   D. Bolts: ASTM F3125, Grade A325, Type 1.
      Nuts: ASTM A563.
      Washers: ASTM F-436.
   E. Anchor Bolts: ASTM F1554 Grade 55 with ASTM A563 Grade A heavy-hex nuts and ASTM A36 plate washers.
   F. Handhole Frame: ASTM A709 Grade 36 or ASTM A36.
   G. Handhole Cover: ASTM A1011 Grade 50, 55, 60 or 65.
   H. Stainless Steel Screws: AISI Type 316.
   I. Reinforcing Steel: ASTM A615 Grade 60.
   J. Galvanization: Bolts, nuts and washers: ASTM F2329 All other steel including plate washer: ASTM A123
   K. Concrete: Class IV (Drilled Shaft) for all environment classifications.

4. Fabrication:
   A. Welding:
      a. Specification Section 460-6.4 and
      b. AASHTO RFD Specification for Structural Supports for Highway Signs, Luminaires, and Traffic Signals Section 14.4.4.
   B. Poles:
      a. Round or 16-sided (Min.)
      b. Taper pole diameter at 0.14 inches per foot
      c. Fabricate Pole longitudinal seam welds (2 maximum) with 60 percent minimum penetration or fusion welds except as follows:
         1. Use a full-penetration groove weld within 6 inches of the circumferential tube-to-plate connection and
         2. Use full-penetration groove welds on the female end section of telescopic (i.e., slip type) field splices for a minimum length of one and one-half times the inside diameter of the female section plus 6 inches.
      d. Pole shaft may be either one or two sections (with telescopic field splice)
      e. Circumferentially welded pole shafts and laminated pole shafts are not permitted
   C. Identification Tag: (Submit details for approval)
      a. 2"x 4" (Max.) aluminum tag
      b. Locate on the inside of the pole and visible from the handhole
      c. Secure with ⅛" diameter stainless steel rivets or screws.
      d. Include the following information on the ID Tag:
         1. Financial Project ID
         2. Pole Type
         3. Pole Height
         4. Manufacturers' Name
         5. Yield Strength (Fy of Steel)
         6. Base Wall Thickness
   D. Except for Anchor Bolts, bolt hole diameters are bolt diameter plus 1/16" and anchor bolt holes are bolt diameter plus ½" (Max) prior to galvanizing.

5. Pole Installation:
   A. Do not install additional wire access holes (not shown in this Index) with a diameter that exceeds 1½" in diameter.
   B. Install Anchor Bolts in accordance with Specification 649-5
   C. Cable Supports: Electrical Cable Guides and Eyebolts.
      a. Locate top and bottom cable guides within the pole aligned with each other.
      b. Position one cable guide 2" below the handhole.
      c. Position other cable guide 1" directly below the top of the tenon.
      d. Position Park Stands 2" below the top of the handhole.

6. Cabinet Installation:
   A. Splice fiber optic cables in cabinet to preterminater patch panel.
   B. Furnish and install Surge Protection Devices (SPDs) on all cabling in cabinet.
   C. Furnish and install secondary SPDs protection on outlets for equipment in cabinet.
   D. Ensure that all electronic equipment power is protected and conditioned with SPDs.
   E. Ensure that equipment cabinet is bonded to CCTV pole grounding system.
   F. Install the pole mounted cabinet with the hinges next to the pole.
   G. Sizes and types of conduits and inner ducts for network communications between the pullbox and cabinet are stated in the Contract Documents.

7. Lowering Device Installation:
   A. Place the lowering cable that moves within the pole in an interior conduit to prevent it from tangling or interfering with any electrical wire that is in the pole. Ensure that any electrical wire within the pole is routed securely and free from slack.
   B. Mount lowering device perpendicular to the roadway or as shown in the plans. Position CC TV pole so that the camera can be safely lowered without requiring lane closures.
   C. Coordinate all lowering device hardware requirements (including Tenon, Tenon mounting plates, parking stands, etc.) with lowering device manufacturer.

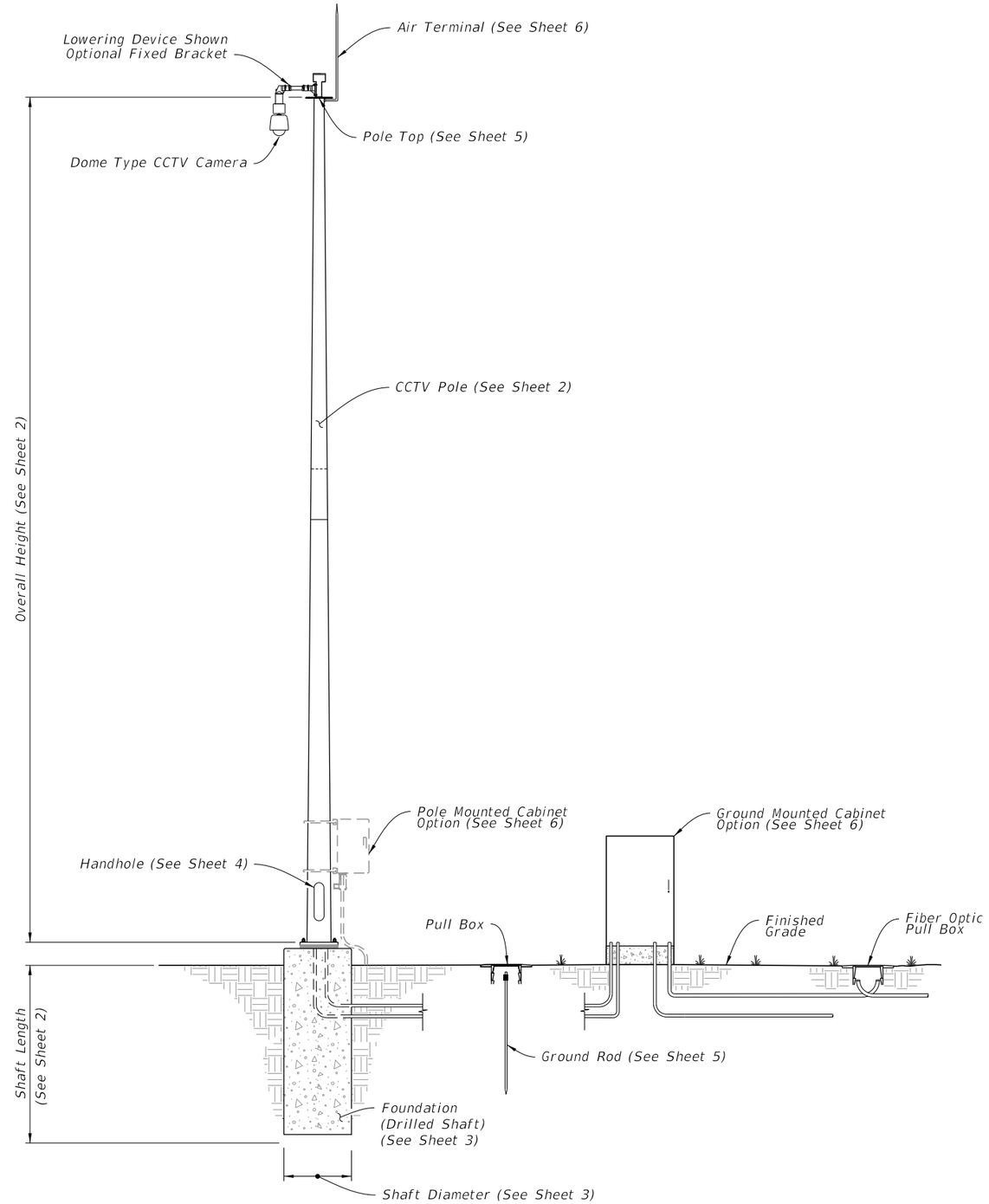

STEEL CCTV POLE ASSEMBLY

10/18/2018 11:55:38 AM

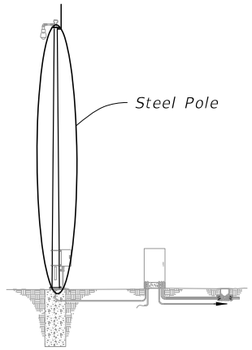

ASSEMBLY

SHAFT DESIGN TABLE			
Pole Overall Height (ft)	Shaft Diameter	Shaft Length	Longitudinal Reinforcement
50	4'-0"	11'-0"	(14) #11
55	4'-0"	12'-0"	(14) #11
60	4'-6"	13'-0"	(16) #11
65	4'-6"	13'-0"	(16) #11
70	5'-0"	14'-0"	(18) #11

ADDITIONAL BURIAL DEPTH DUE TO GROUND SLOPE		
Ground Slope	4'-0" Shaft Diameter	5'-0" Shaft Diameter
1:5	3'-0"	4'-0"
1:4	4'-0"	5'-0"
1:3	5'-0"	6'-0"
1:2	7'-0"	9'-0"

FOUNDATION NOTES:

1. Shaft Length is based on 1'-0" height above the finished grade.

2. Shaft Design Table values are based on level ground (Flatter than 1:5). For foundation within slopes 1:5 and greater, increase the foundation depth in accordance with the Additional Burial Depth Due To Ground Slope table. For values in-between those shown in the table, use the higher value.

BASE PLATE AND ANCHOR BOLT DESIGN TABLE							
Pole Overall Height (ft)	Base Plate Diameter (in.)	Base Plate Thickness (in.)	Anchor Bolt Circle (in.)	Number of Bolts	Anchor Bolt Diameter (in.)	Anchor Bolt Embedment (in.)	Minimum Anchor Bolt Projection (in.)
50	27	2.5	22	6	1.25	31	8.5
55	28	2.5	23	6	1.25	33	8.5
60	33	2.5	27	6	1.50	34	9.5
65	35	2.5	29	6	1.50	35	9.5
70	40	2.5	33	6	1.75	38	10.5

POLE DESIGN TABLE							
Pole Overall Height (ft)	Section 1 (Top)			Section 2 (Bottom)			Joint
	Length	Wall Thickness (in.)	Base Diameter (in.)	Length	Wall Thickness (in.)	Base Diameter (in.)	Minimum Splice Length (in.)
50	---	---	---	50'-0"	0.25	17	---
	25'-0"	0.25	14	28'-0"	0.25	17	27
55	30'-0"	0.25	15	28'-0"	0.3125	18	30
60	35'-0"	0.25	18	29'-0"	0.3125	21	33
65	33'-0"	0.25	19	36'-0"	0.3125	23	33
70	38'-0"	0.25	22	36'-0"	0.3125	26	39

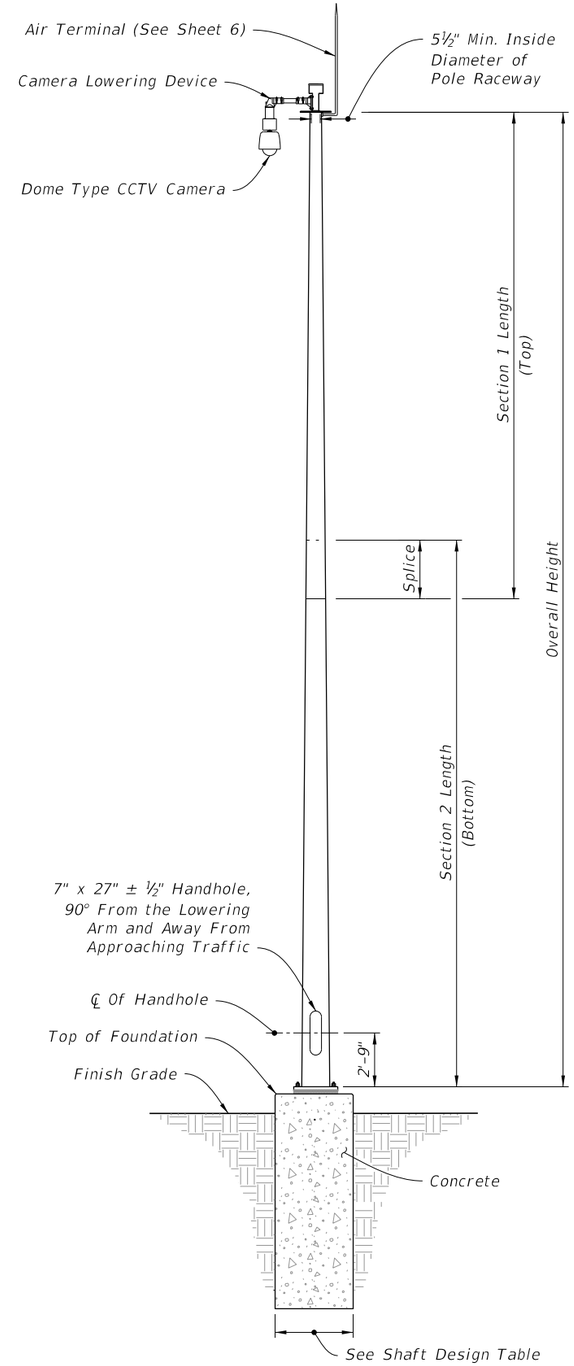

CAMERA LOWERING DEVICE

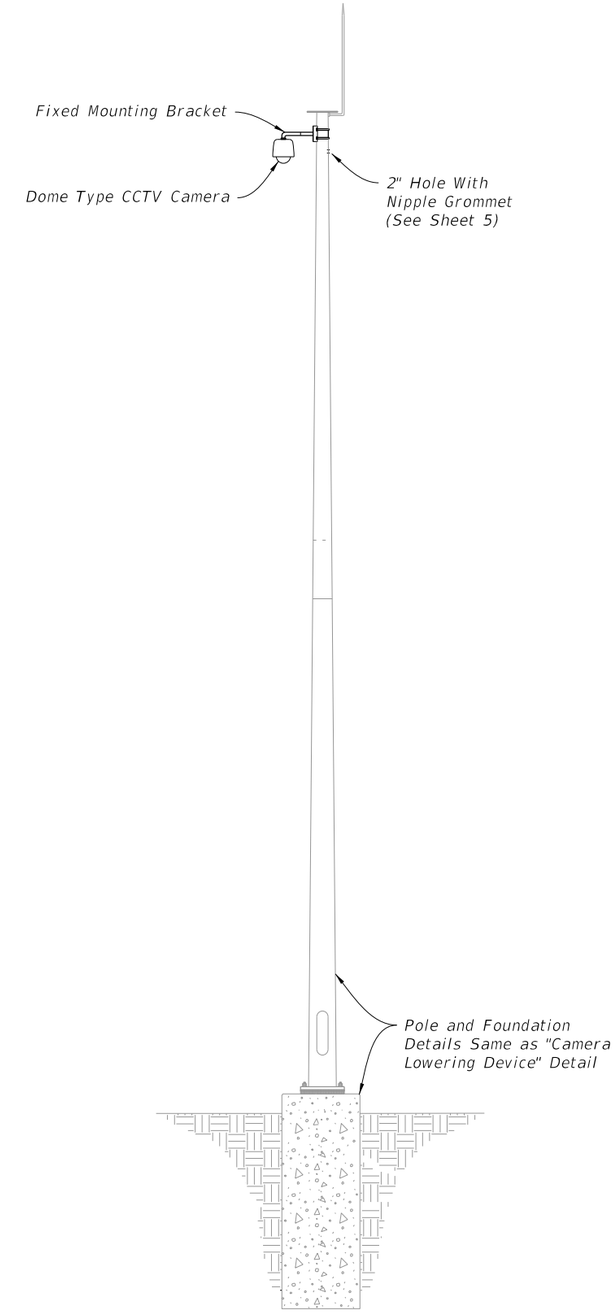

FIXED MOUNTING BRACKET

ELEVATION

10/18/2018 11:55:39 AM

LAST REVISION	REVISION	DESCRIPTION:				
11/01/17			FY 2019-20 STANDARD PLANS	STEEL CCTV POLE	INDEX 649-020	SHEET 2 of 6

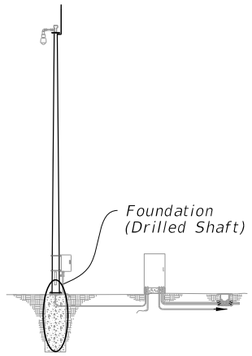

ASSEMBLY

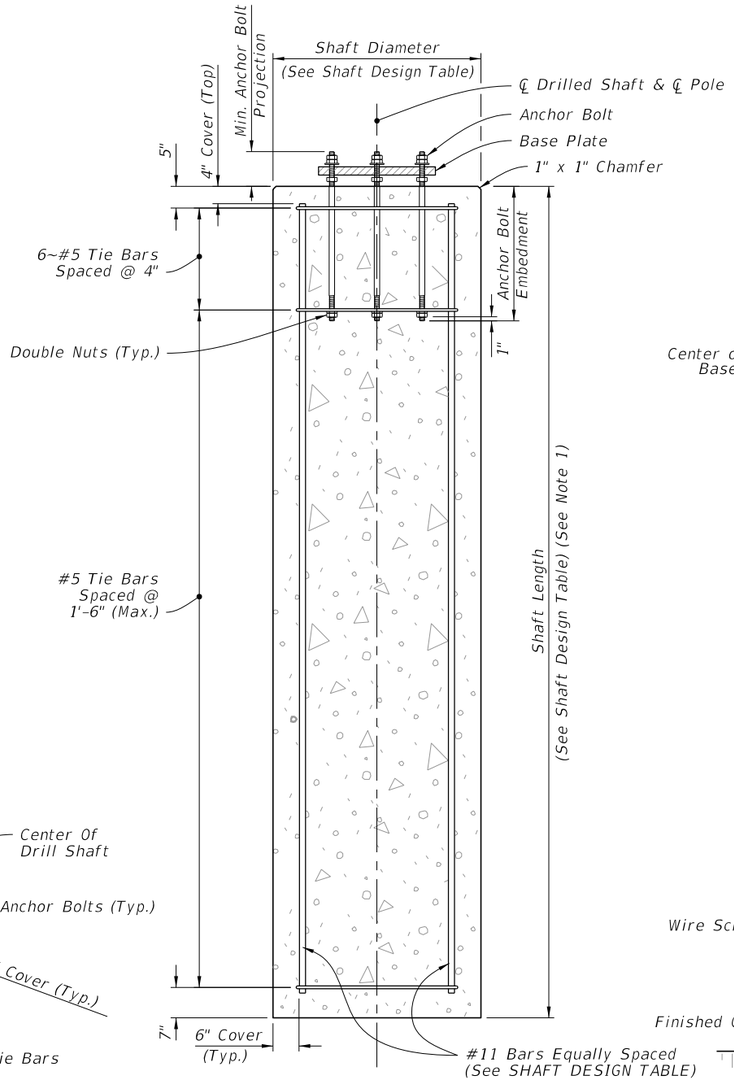

ELEVATION

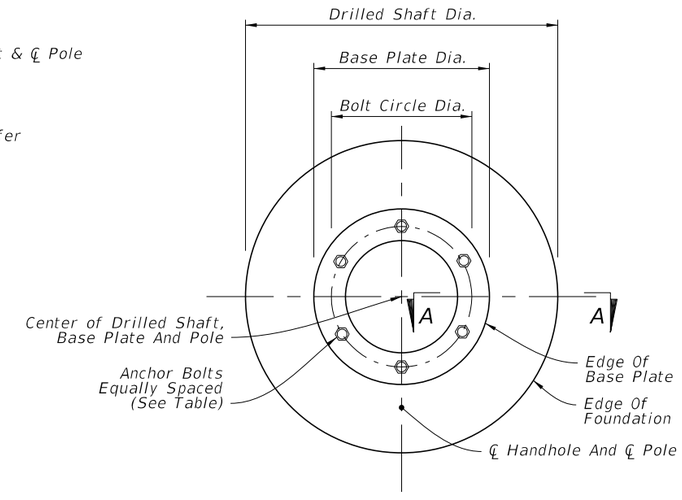

PLAN

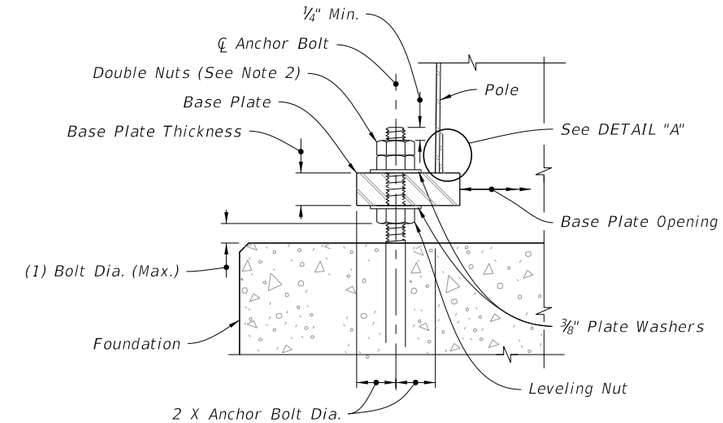

SECTION A-A

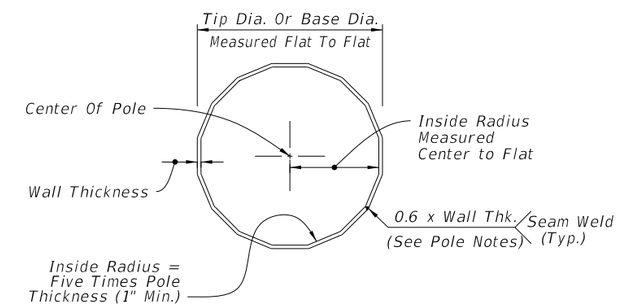

SECTION B-B

NOTES:

1. Shaft Length is based on 1'-0" height above the finished grade.
2. Double Nuts: Bottom nut may be half-height 'jam' nut. Provide individual nut covers (not shown) for each bolt.
3. Conduit and CSL Tubes not shown for clarity.
4. Work these details with Data Table on Sheet 2.

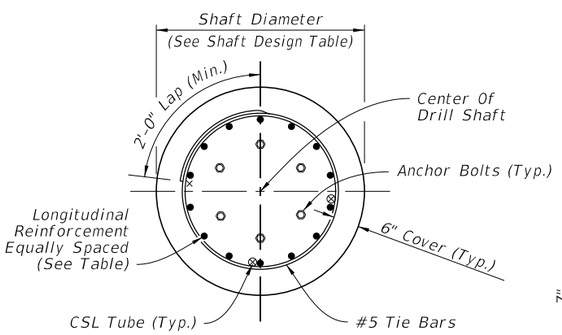

PLAN

FOUNDATION

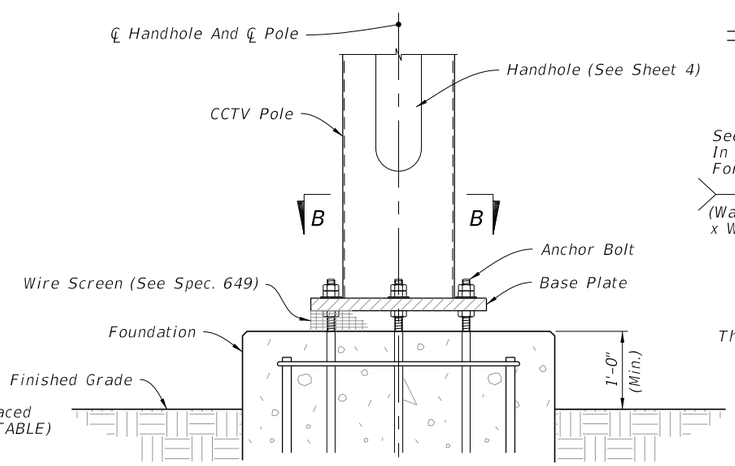

ELEVATION

BASE PLATE

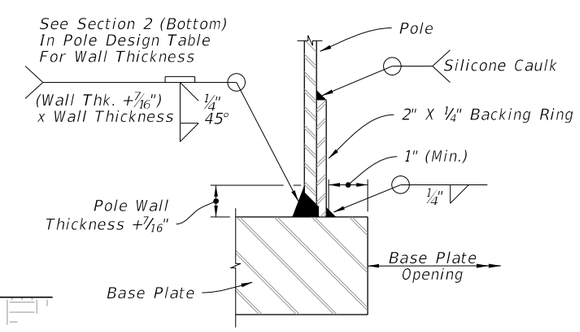

JOINT WELD DETAIL

DETAIL "A"

10/18/2018 11:55:40 AM

LAST REVISION	REVISION	DESCRIPTION:			INDEX	SHEET
11/01/18			FY 2019-20 STANDARD PLANS	STEEL CCTV POLE	649-020	3 of 6

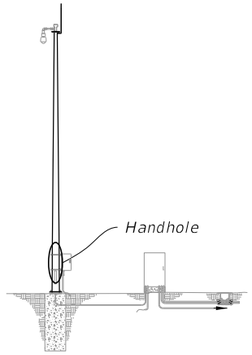

ASSEMBLY

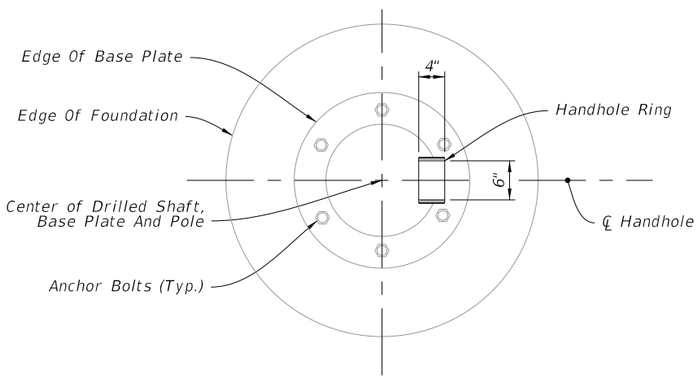

PLAN

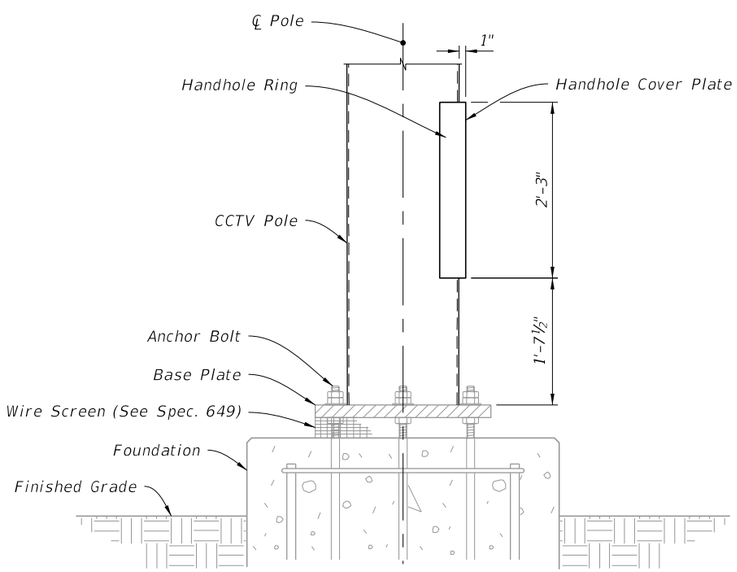

ELEVATION

HANDHOLE LOCATION

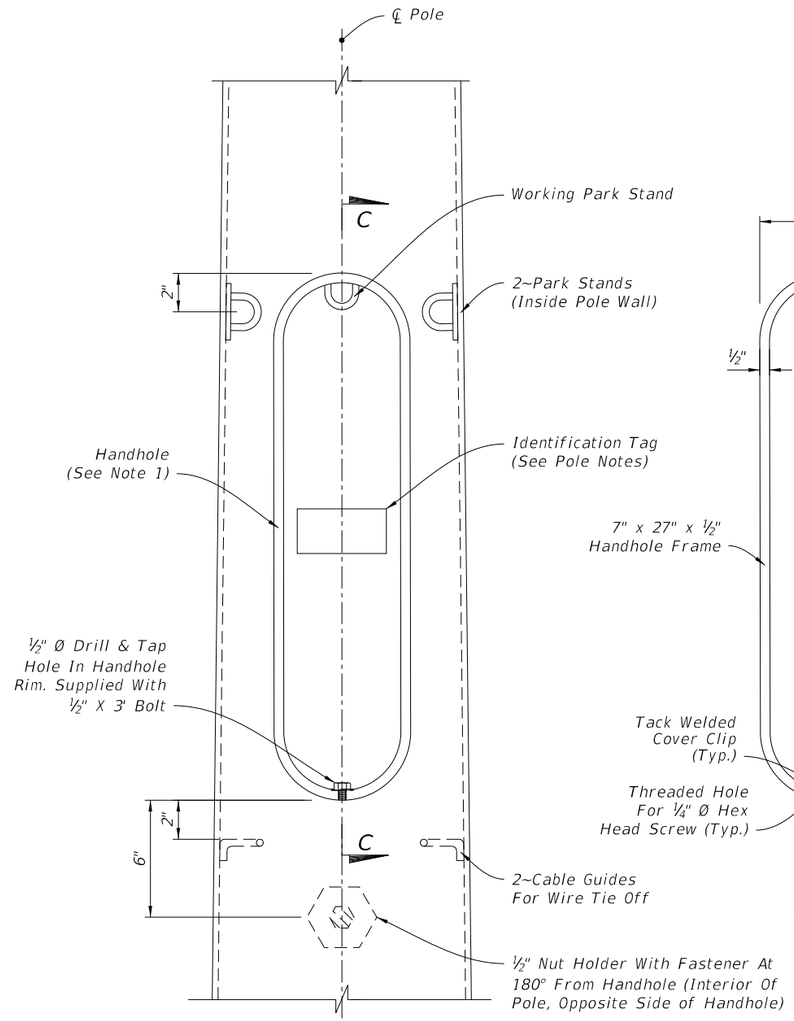

ELEVATION

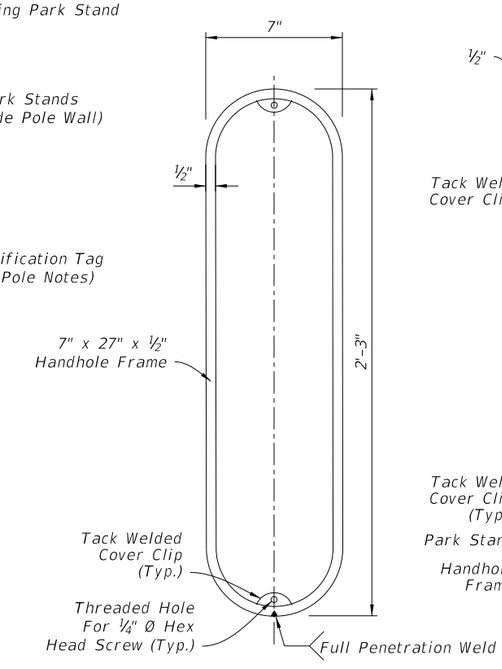

FRAME

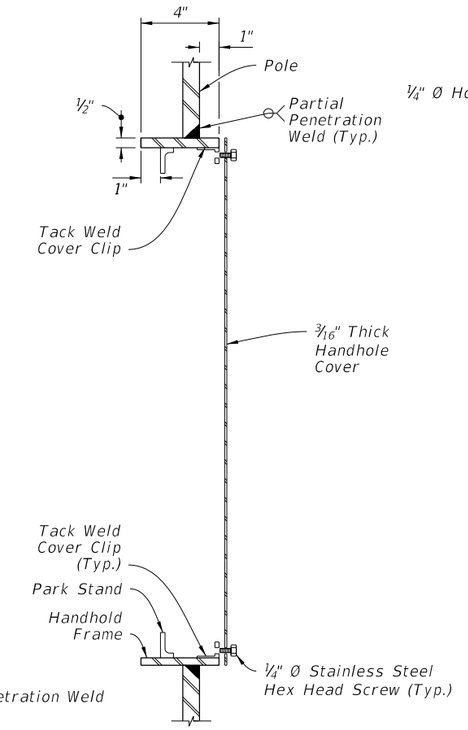

SECTION C-C

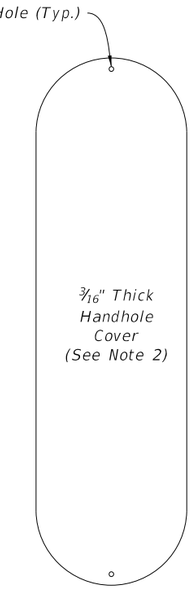

COVER PLATE

NOTE:

To secure the cover plate, install a steel chain from the cover to the pole or by mounting the cover with hinges and install a pad lock tab.

HANDHOLE DETAIL

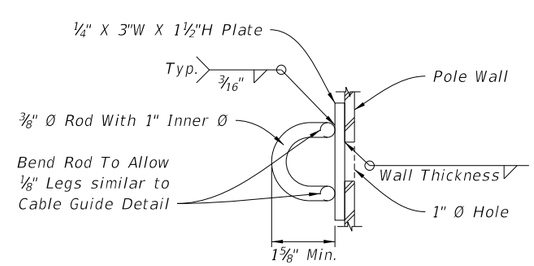

Rod Option

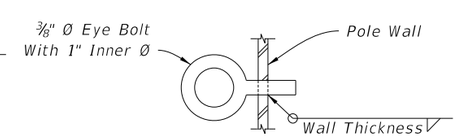

Eye Bolt Option

PARK STAND DETAILS

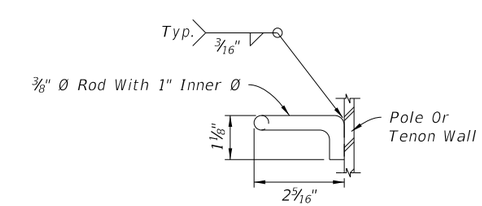

CABLE GUIDE DETAIL

10/18/2018 11:55:40 AM

LAST REVISION	REVISION	DESCRIPTION:			INDEX	SHEET
11/01/17			FY 2019-20 STANDARD PLANS	STEEL CCTV POLE	649-020	4 of 6

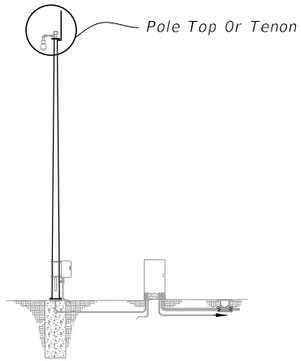

ASSEMBLY

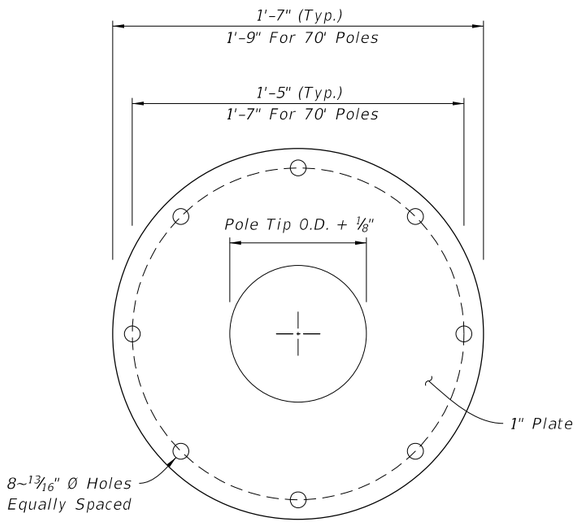

PLAN VIEW

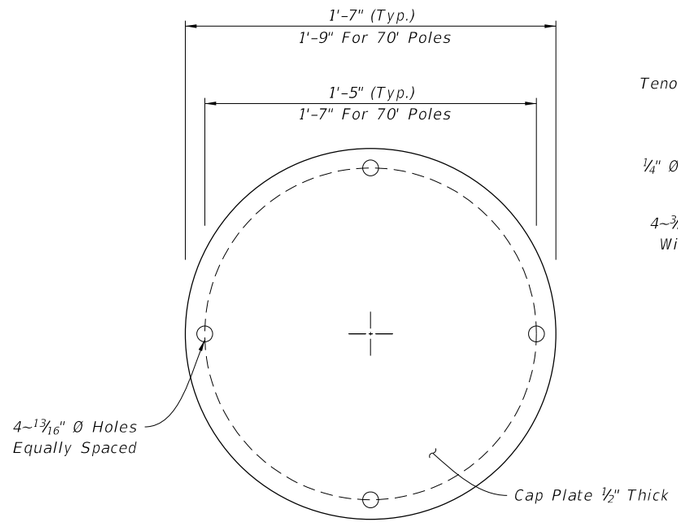

PLAN VIEW

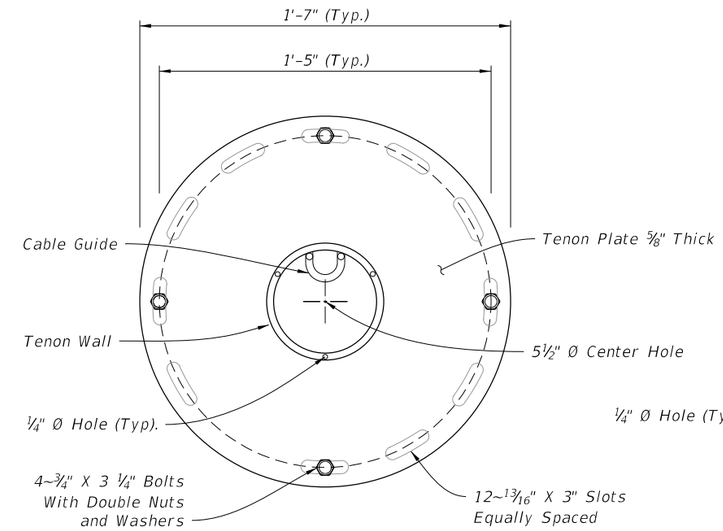

PLAN VIEW

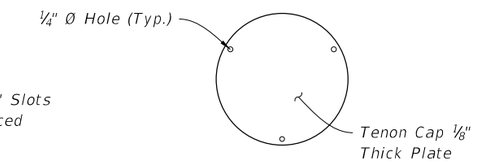

TENON CAP

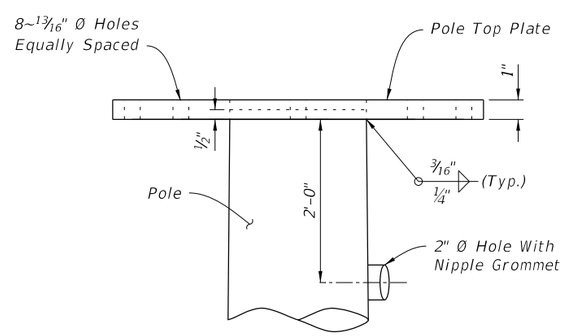

ELEVATION

POLE TOP PLATE

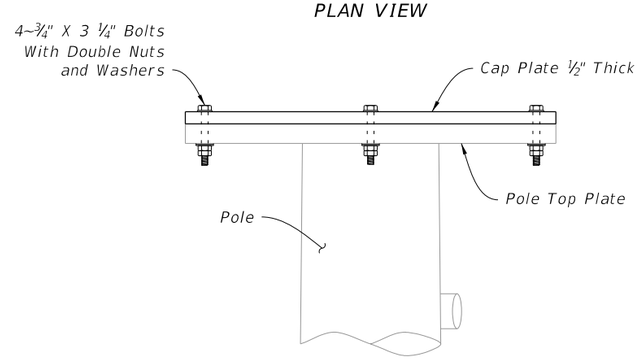

ELEVATION
CAP PLATE DETAIL

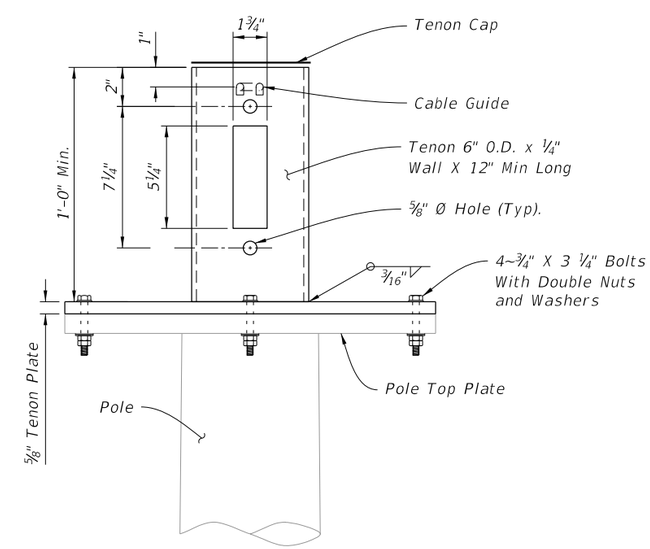

ELEVATION
LOWERING DEVICE TENON

POLE TOP DETAIL

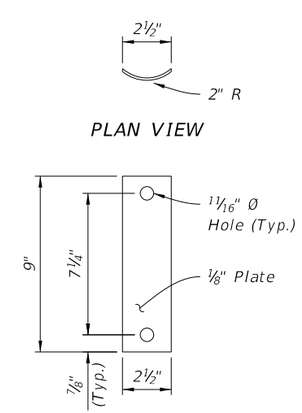

ELEVATION

TENON COVER

10/18/2018 11:55:41 AM

LAST REVISION	REVISION	DESCRIPTION:			INDEX	SHEET
11/01/17			FDOT FY 2019-20 STANDARD PLANS	STEEL CCTV POLE	649-020	5 of 6

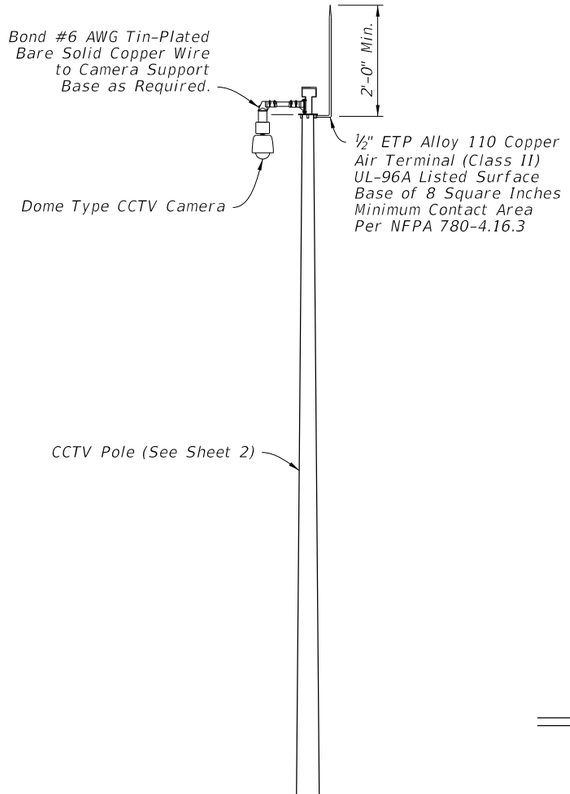

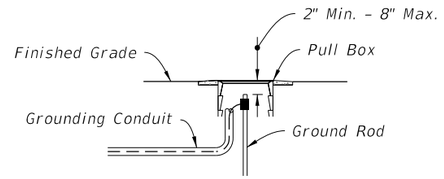

(Pole Mounted Cabinet Configuration Shown)

DETAIL "B"

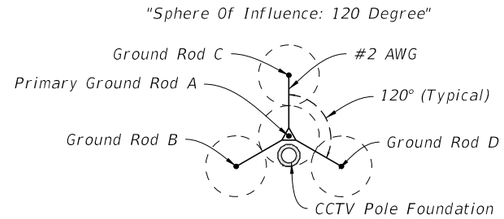

TYPICAL
(20' Rods, 40' Spacing)

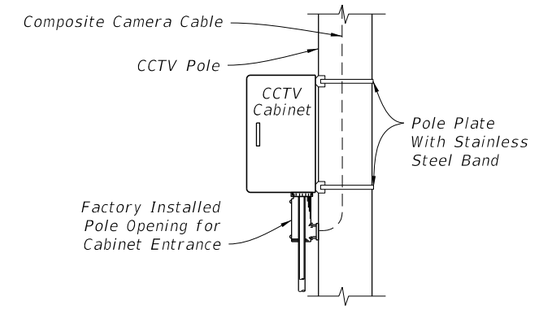

SIDE VIEW

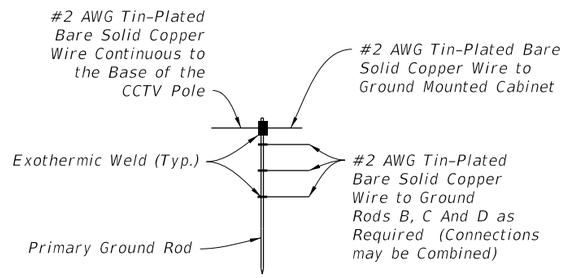

DETAIL "C"

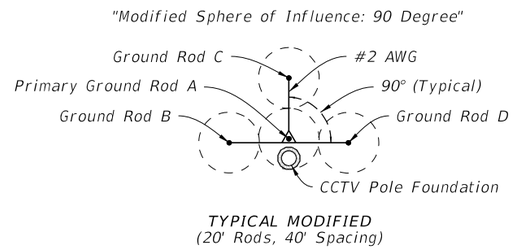

TYPICAL MODIFIED
(20' Rods, 40' Spacing)

GROUND ROD ARRAY PLACEMENT

DETAIL "D"

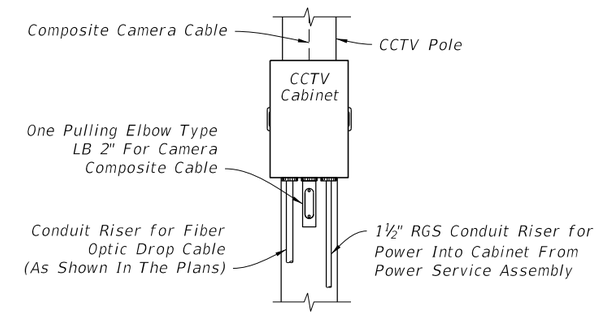

FRONT VIEW

DETAIL "E"

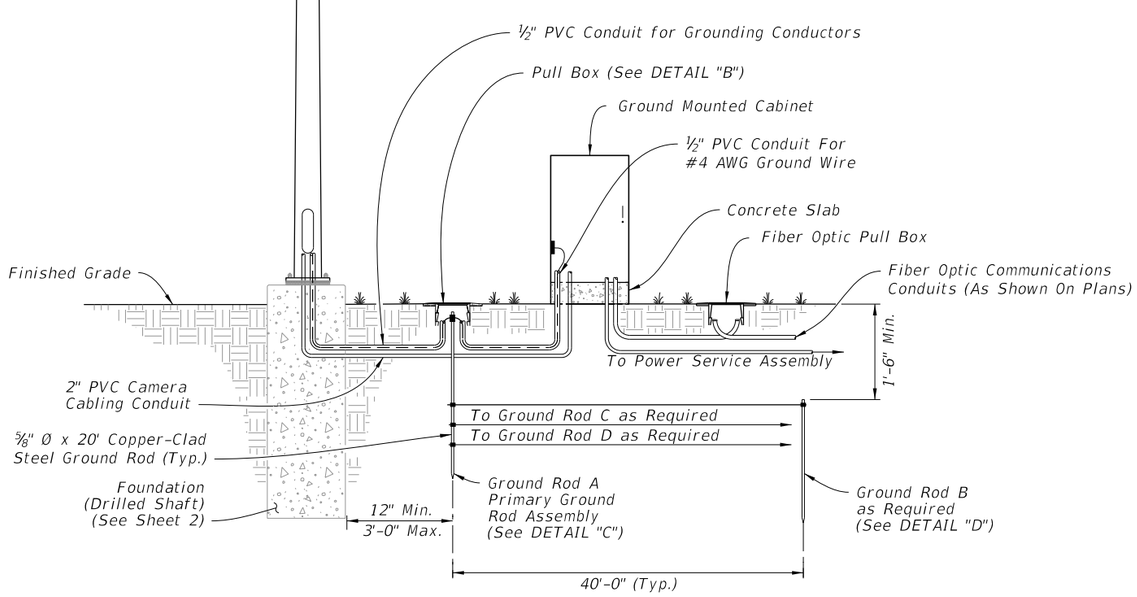

GROUND MOUNTED CABINET

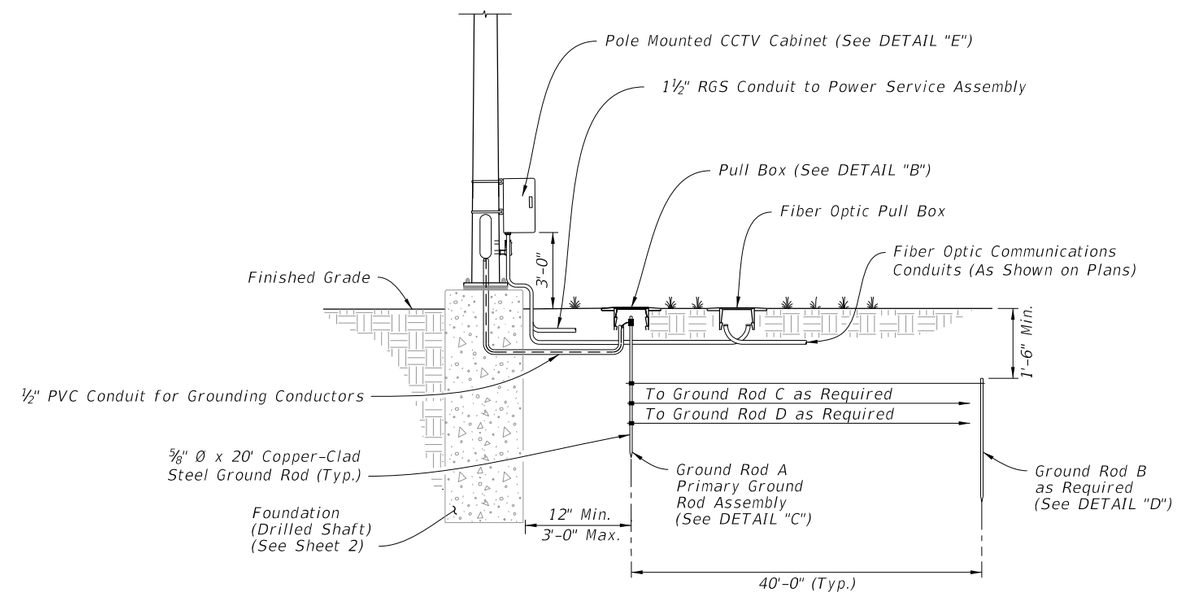

POLE MOUNTED CABINET

STEEL CCTV POLE GROUNDING

10/18/2018 11:55:42 AM

LAST REVISION	REVISION	DESCRIPTION:			INDEX	SHEET
11/01/17			FDOT FY 2019-20 STANDARD PLANS	STEEL CCTV POLE	649-020	6 of 6