GENERAL NOTES:

1. Work this Index with Specifications 641.

2. This Index is considered fully detailed and no shop drawings are necessary. Submit Shop Drawings for minor modifications not detailed in the Plans.

3. Install pole plumb.

4. Provide either round or 12-sided Poles.

5. See Index 635-001 for additional details for Pull Boxes.

6. Materials:

   A. Pole: Use Class VI concrete with 6 ksi minimum strength at transfer.
   B. Prestressing Strands: ASTM A416, Grade 270 low relaxation.
   C. Reinforcing Steel: ASTM A615, Grade 60
   D. Spiral Reinforcing: ASTM A1064 Cold-Drawn
   E. Bolts: ASTM F1554, Grade 55
      Nuts: ASTM A563, Grade A Heavy Hex
      Washers: ASTM F436
   F. Steel plates and Pole Cap: ASTM A36 or ASTM A709, Grade 50
   G. Galvanization: Bolts, nuts and washers: ASTM F2329
      All other steel: ASTM A123

7. Pole Fabrication:

   A. Cut the tip end of the prestressed strand first or simultaneously with the butt end.
   B. For spiral reinforcing, one turn is required for spiral splices and two turns are required at the top and bottom of poles.
   C. For Reinforcing Steel, lap splice to consist of a 3'-0" lap length at each splice. No more than two opposing rebar to be spliced at the same cross section. Stagger lap splices as needed.
   D. Provided a Class 3 surface finish in accordance with Specification 400.
   E. Provide a 1" minimum cover.
   F. Provide handhole and coupler cover plates made of non-corrosive materials. Attach cover plates to poles using lead anchors or threaded inserts embedded in the poles in conjunction with round headed chrome plated screws.
   G. Provide Identification Markings on the poles where indicated on the following sheets. Include the following information using inset numerals with 1" height or as approved in the Producers' Quality Control Program:

      Financial Project ID
      Pole Manufacturer
      Pole Length

   H. Tie ground wires to the interior of reinforcing steel as necessary to prevent displacement during concreting operations.
   I. Storage, Handling and Erection locations shown may vary within ± 3".

8. Cabinet Installation:

   A. Splice fiber optic cables in cabinet to preterminater patch panel.
   B. Furnish and install Surge Protection Devices (SPDs) on all cabling in cabinet.
   C. Furnish and install secondary SPDs protection on outlets for equipment in cabinet.
   D. Ensure that all electronic equipment power is protected and conditioned with SPDs.
   E. Ensure that equipment cabinet is bonded to CCTV pole grounding system.
   F. Install the pole mounted cabinet with the hinges next to the pole.
   G. Sizes and types of conduits and innerducts for network communications between the pullbox and cabinet are stated in the Contract Documents.

9. Lowering Device Installation:

   A. Place the lowering cable that moves within the pole in an interior conduit to prevent it from tangling or interfering with any electrical wire that is in the pole. Ensure that any electrical wire within the pole is routed securely and free from slack.
   B. Mount lowering arm perpendicular to the roadway or as shown in the plans. Position CCTV pole so that the camera can be safely lowered without requiring lane closures.
   C. Coordinate all lowering device hardware requirements (including Tenon, Tenon mounting plates, parking stand, etc.) with lowering device manufacturer.

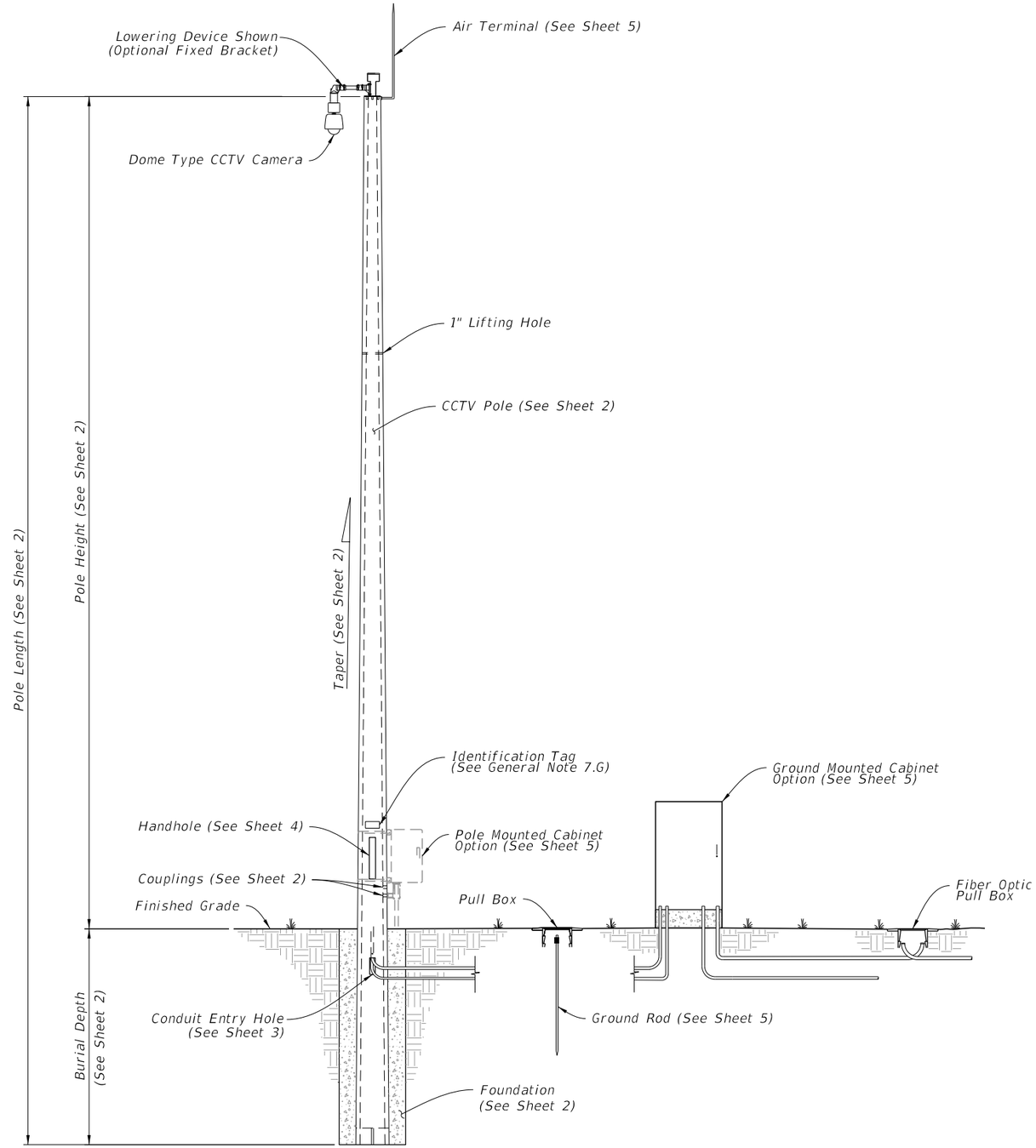

CCTV POLE ASSEMBLY

10/24/2018 12:43:20 PM

LAST REVISION	REVISION	DESCRIPTION:			INDEX	SHEET
11/01/17			FY 2019-20 STANDARD PLANS	CONCRETE CCTV POLE	641-020	1 of 5

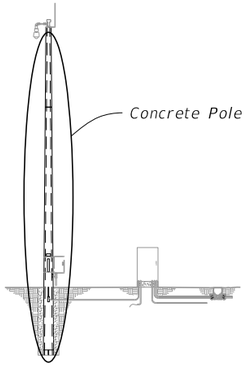

ASSEMBLY

NOTES:

1. Diameter of 12-sided poles are measured flat to flat.
2. Total Taper applies to pole, strands and reinforcing.
3. For 12-Sided Pole and Round Roles Option 2, Stress prestressed strand to 70% of Ultimate before transfer. For Round Pole Option 1, stress prestressed strand to 60% of Ultimate before transfer.
4. Pole Design Tables, Burial Depth is based on level ground (Flatter than 1:5). For poles within slopes 1:5 and greater, increase the burial depth in accordance with the Additional Burial Depth Due To Ground Slope table. For values in-between those shown in the table, use the higher value.

ADDITIONAL BURIAL DEPTH DUE TO GROUND SLOPE

Ground Slope	Additional Burial Depth (feet)
1:5	3
1:4	4
1:3	5
1:2	7

12-SIDED POLE DESIGN TABLE (See Note 1)

Pole Length (ft)	Pole Height (ft)	Burial Depth (ft)	Total Taper (in/ft) (See Note 2)	Void Taper (in/ft)	Min. Wall Thickness Tip (in)	Min. Wall Thickness Butt (in)	Tip Diameter (in)	Butt Diameter (in)	Strand Pattern	Strand Diameter
63	50	13	0.18	0.18	3	3	12	23.34	1	0.6"
69	55	14	0.18	0.18	3	3	12	24.42	1	0.6"
75	60	15	0.18	0.18	3	3	12	25.50	2	0.6"
80	65	15	0.18	0.18	3	3	12	26.40	2	0.6"
86	70	16	0.18	0.18	3	3	12	27.48	2	0.6"

ROUND POLE DESIGN TABLE

Pole Length (ft)	Pole Height (ft)	Burial Depth (ft)	Design Option	Total Taper (in/ft) (See Note 2)	Void Taper (in/ft)	Min. Wall Thickness Tip (in)	Min. Wall Thickness Butt (in)	Tip Diameter (in)	Butt Diameter (in)	Strand Pattern	Strand Diameter
63	50	13	Option 1	0.216	0.192	3	3.76	12.15	25.76	3	0.5"
			Option 2	0.180	0.172	3	3.50	12.00	23.34	4	0.5"
69	55	14	Option 1	0.216	0.192	3	3.83	12.15	27.05	3	0.5"
			Option 2	0.180	0.173	3	3.50	12.00	24.42	4	0.5"
75	60	15	Option 1	0.216	0.192	3	3.90	12.15	28.35	3	0.5"
			Option 2	0.180	0.173	3	3.50	12.00	25.50	4	0.5"
80	65	15	Option 1	0.216	0.192	3	3.96	12.15	29.43	3	0.5"
			Option 2	0.180	0.174	3	3.50	12.00	26.40	4	0.5"
86	70	16	Option 1	0.216	0.192	3	4.03	12.15	30.73	3	0.5"
			Option 2	0.180	0.174	3	3.50	13.00	28.48	4	0.5"

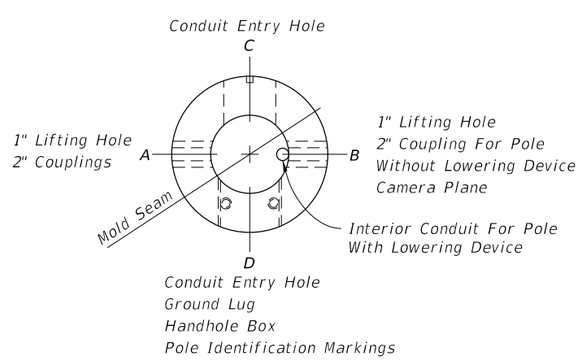

PLAN VIEW

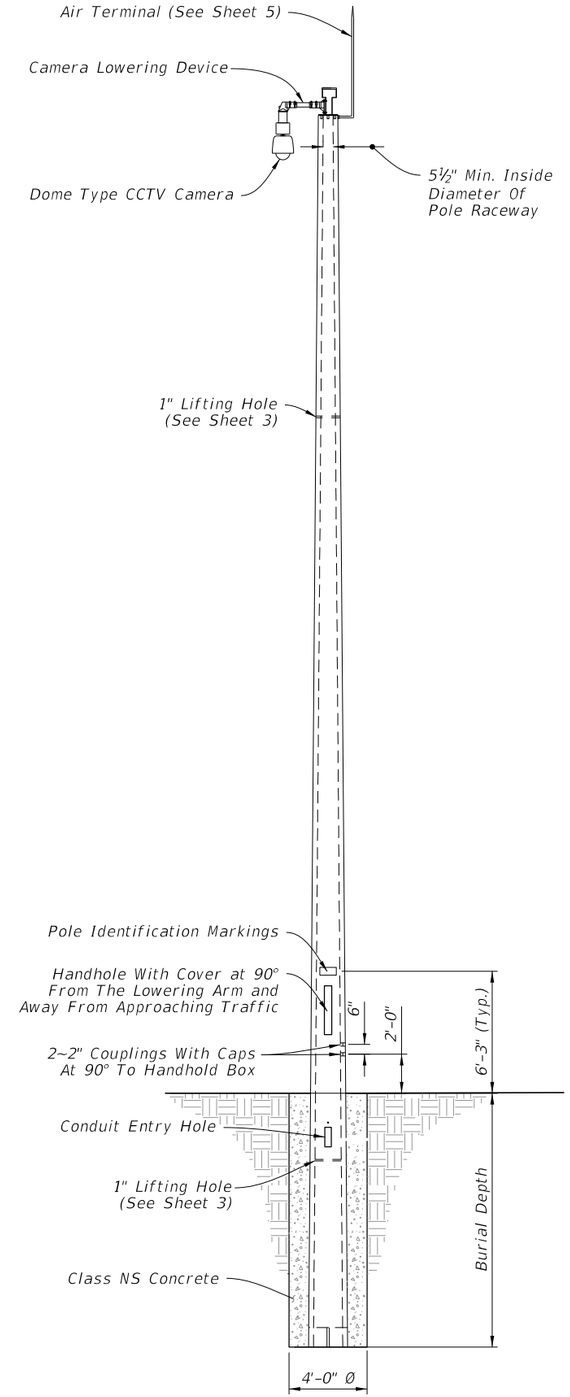

CAMERA LOWERING DEVICE

FIXED MOUNTING BRACKET

ELEVATION

10/24/2018 12:43:21 PM

LAST REVISION	REVISION	DESCRIPTION:			INDEX	SHEET
11/01/17			FDOT FY 2019-20 STANDARD PLANS	CONCRETE CCTV POLE	641-020	2 of 5

*Spiral wire may be wrapped in two directions given that an equivalent area of spiral wire is provided to that shown in this Index and the cover requirements are met.

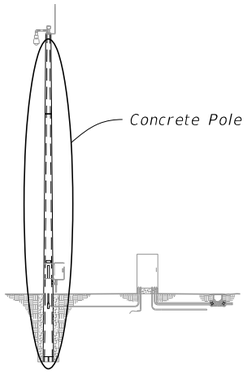

ASSEMBLY

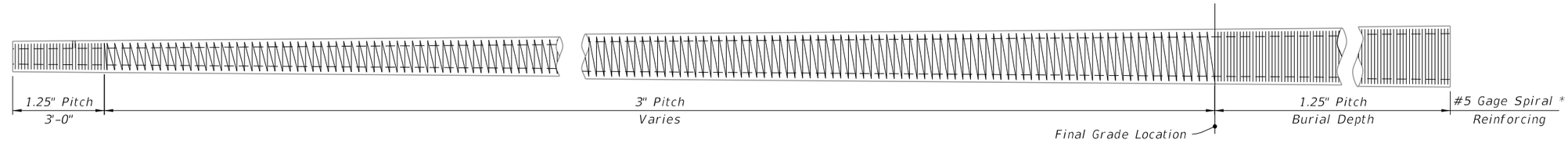

SPIRAL REINFORCING ELEVATION
(Strands, Holes and Fixtures Not Shown)

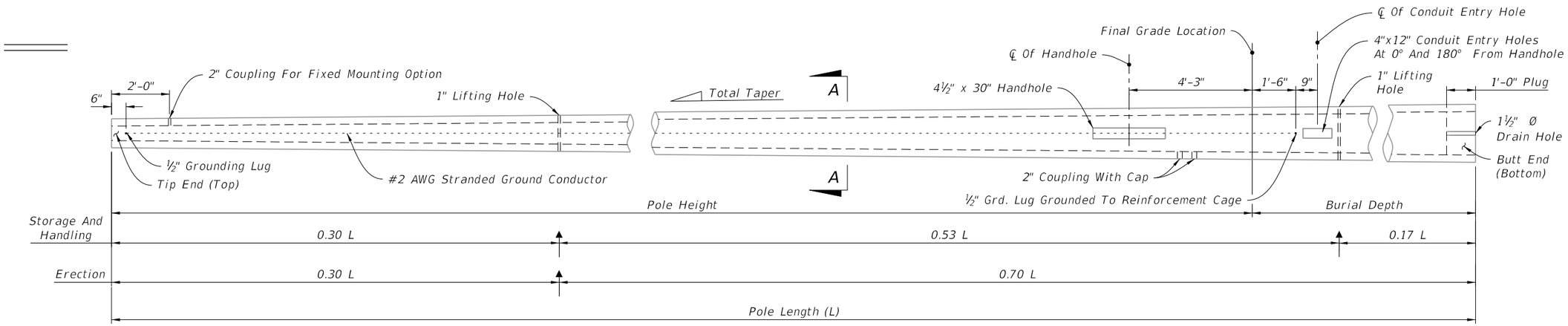

POLE ELEVATION
(Strands And Reinforcing Not Shown)

LEGEND:

- ● Prestressed Strand
- △ (4) #5 Rebar (Shown) or (6) #4 Rebar
- ↑ Lift Points

NOTE:

Strands and rebar shown are continuous from Tip End To Butt End.

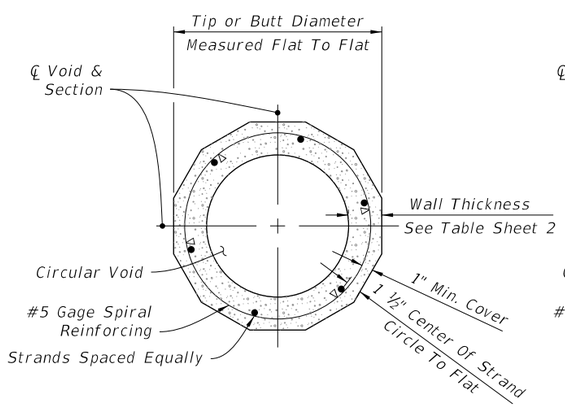

SECTION A-A
STRAND PATTERN 1

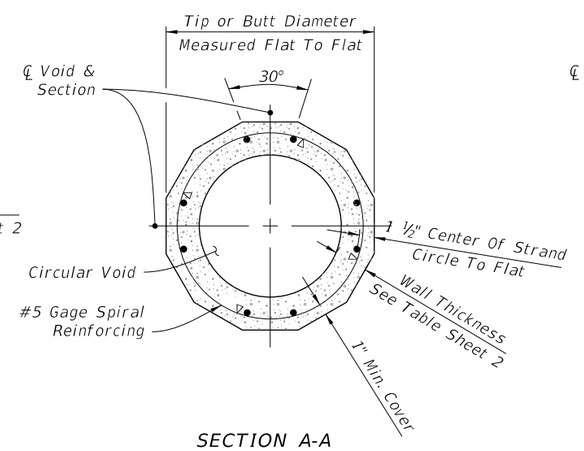

SECTION A-A
STRAND PATTERN 2

12 - SIDED CONCRETE POLE

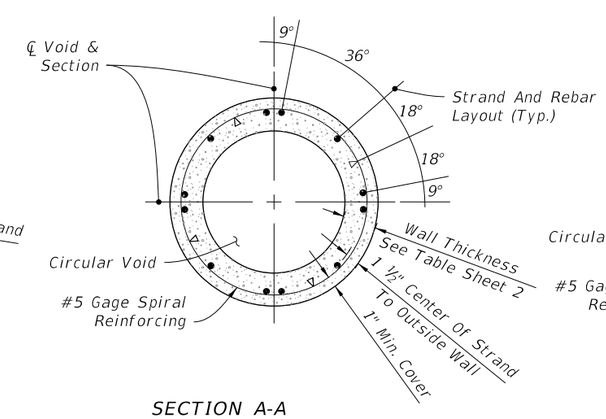

SECTION A-A
STRAND PATTERN 3
(Option 1)

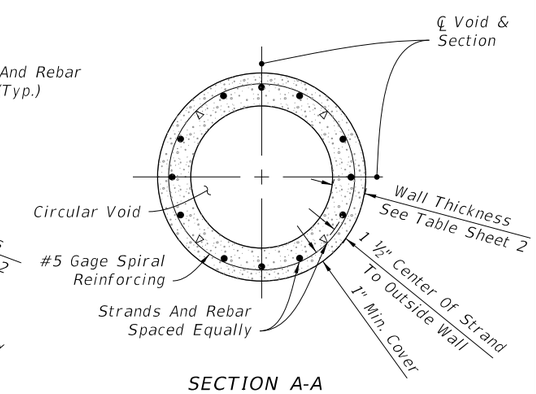

SECTION A-A
STRAND PATTERN 4
(Option 2)

ROUND CONCRETE POLE

10/24/2018 12:43:22 PM

LAST REVISION	REVISION	DESCRIPTION:			INDEX	SHEET
11/01/17			FY 2019-20 STANDARD PLANS	CONCRETE CCTV POLE	641-020	3 of 5

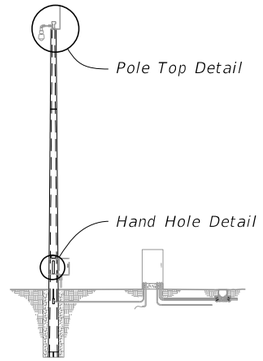

ASSEMBLY

NOTES:

1. Install all handhole and opening covers prior to shipping.
2. Install ½" Ø x 5" long stud with hex nut in insert before shipment.
3. As an alternate, embed 4~½" Ø x 18" stainless steel threaded rods with a threaded nut. At top of rod, thread a coupling nut to attach plate w/ 4~½" x 1¾" stainless steel bolts.
4. Handhole frame may be Cast Aluminum 356.2.

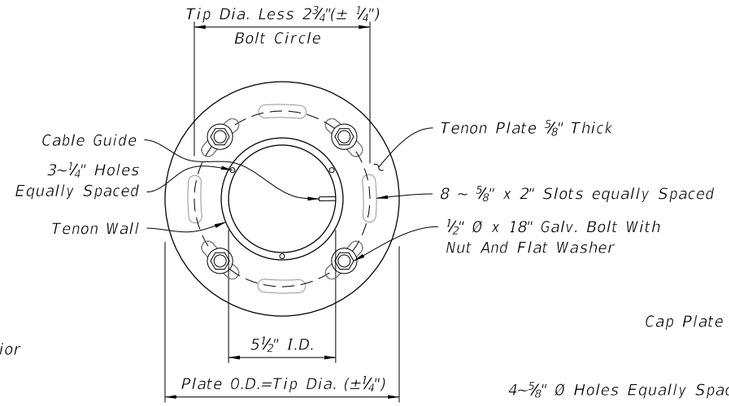

PLAN VIEW

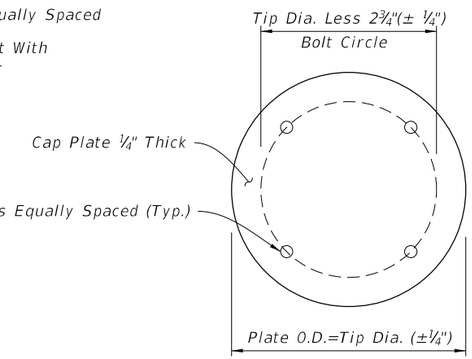

PLAN VIEW

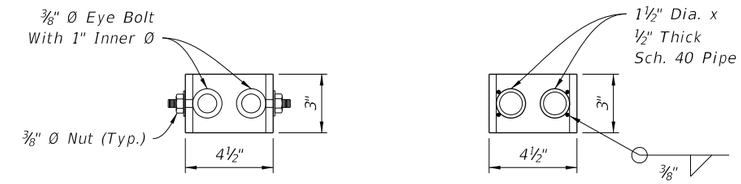

EYE BOLT OPTION

PIPE OPTION

PARK STAND DETAIL

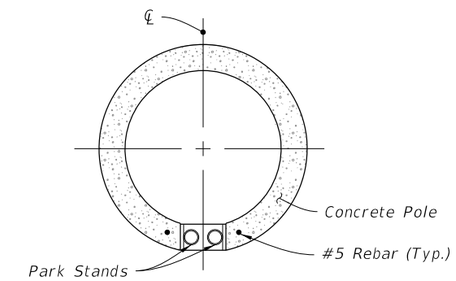

PLAN VIEW

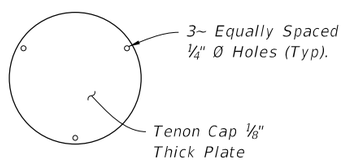

TENON CAP

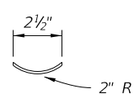

PLAN VIEW

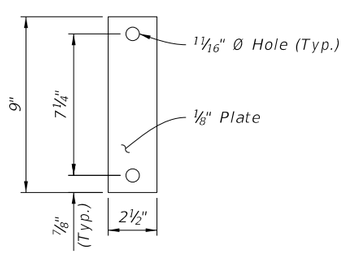

ELEVATION

TENON COVER

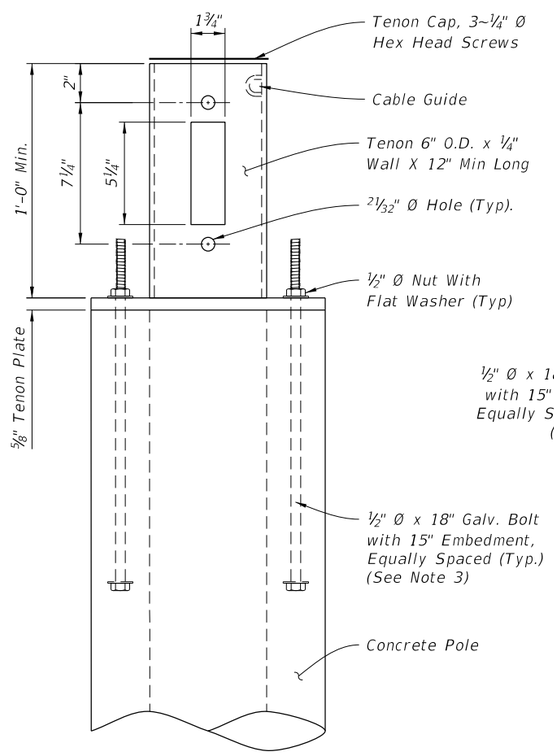

ELEVATION

LOWERING DEVICE TENON

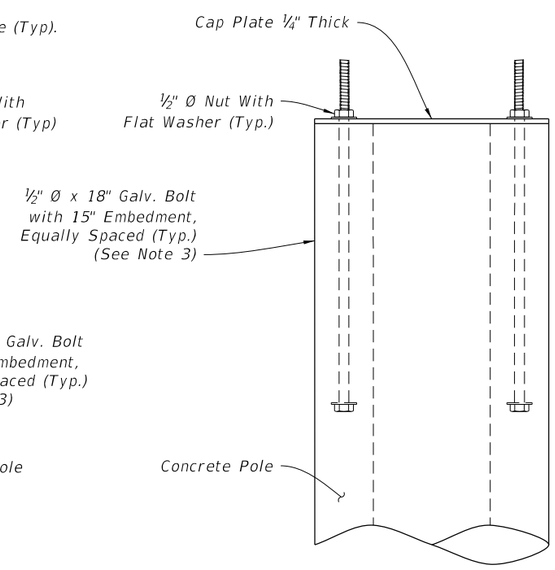

ELEVATION

CAP PLATE DETAIL
(Without Lowering Device)

POLE TOP DETAIL

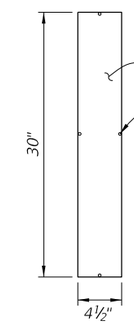

HANDHOLE COVER

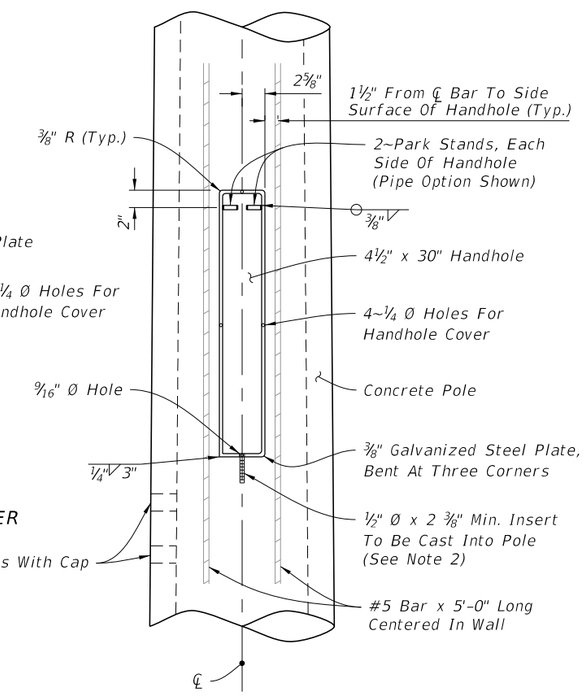

ELEVATION

HANDHOLE DETAIL

10/24/2018 12:43:23 PM

LAST REVISION	REVISION	DESCRIPTION:			INDEX	SHEET
11/01/17			FY 2019-20 STANDARD PLANS	CONCRETE CCTV POLE	641-020	4 of 5

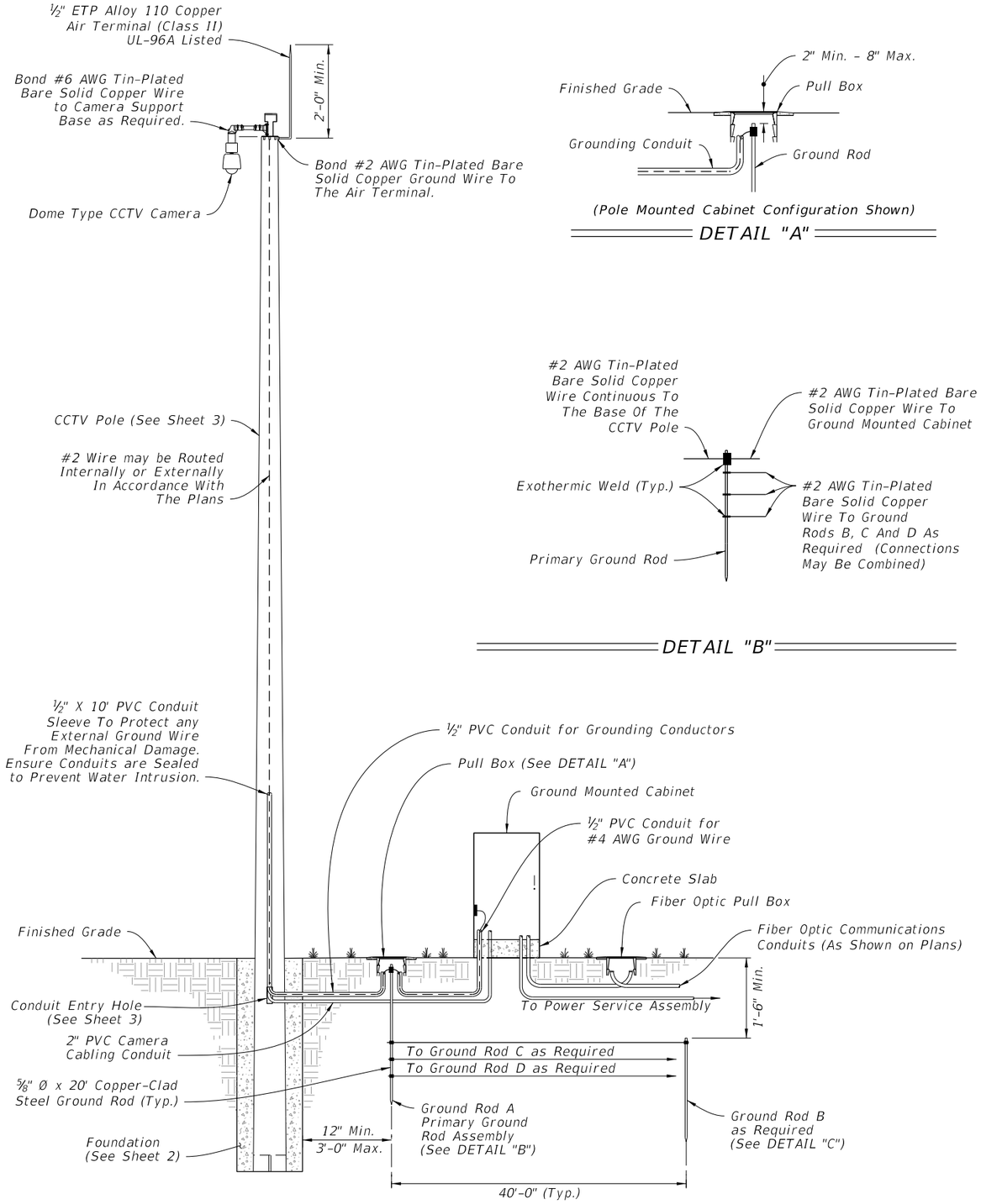

GROUND MOUNTED CABINET

(Pole Mounted Cabinet Configuration Shown)

DETAIL "A"

DETAIL "B"

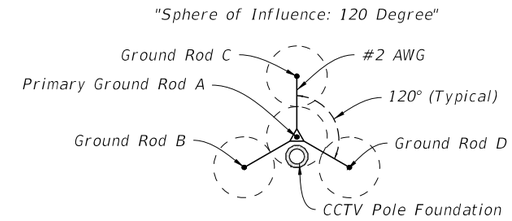

TYPICAL
(20' Rods, 40' Spacing)

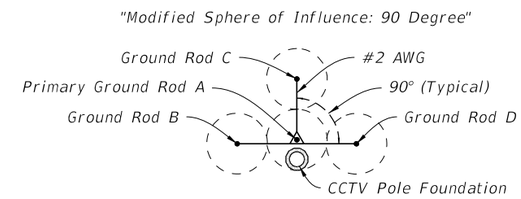

TYPICAL MODIFIED
(20' Rods, 40' Spacing)

GROUND ROD ARRAY PLACEMENT

DETAIL "C"

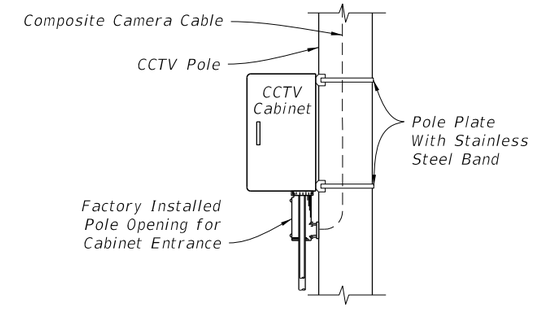

SIDE VIEW

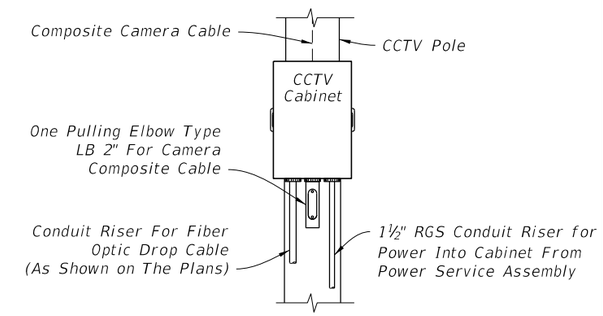

FRONT VIEW

DETAIL "D"

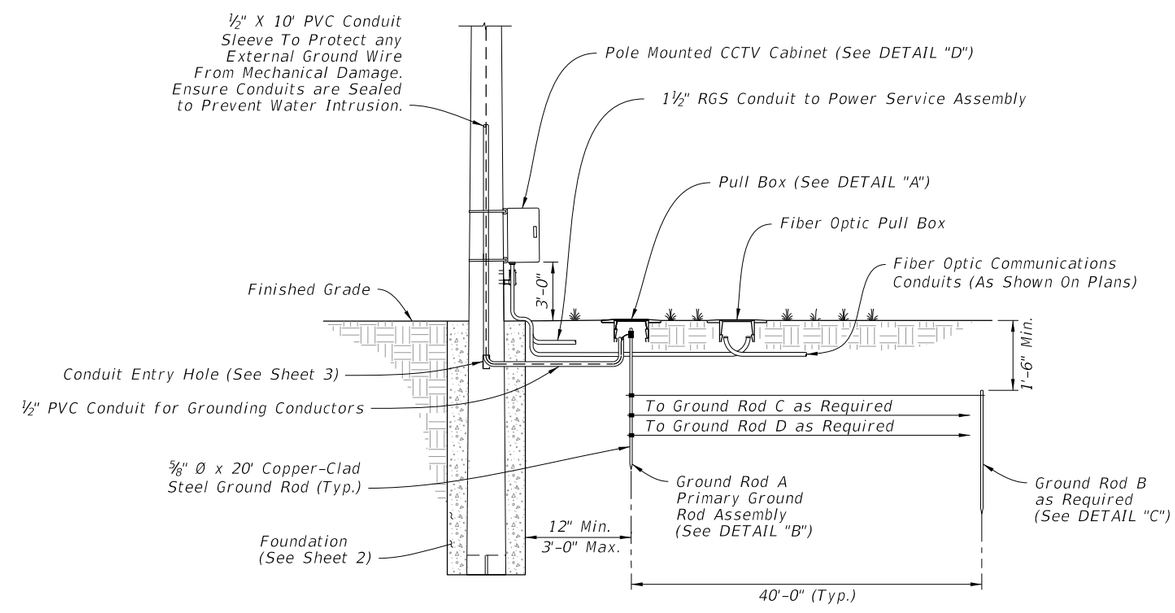

POLE MOUNTED CABINET

CONCRETE CCTV POLE GROUNDING

10/24/2018 12:43:24 PM

LAST REVISION	REVISION	DESCRIPTION:			INDEX	SHEET
11/01/17			FDOT FY 2019-20 STANDARD PLANS	CONCRETE CCTV POLE	641-020	5 of 5