SHEET	CONTENTS
1	General Notes; Index Contents
2	General, TL-3 Guardrail - Installed Plan and Elevation
3	Low-Speed, TL-2 Guardrail - Installed Plan and Elevation
4	W-Beam and Thrie-Beam Panel Details
5	Post and Offset Block Details
6	Guardrail Sections - Heights and Adjacent Slopes
7	End Treatment - Approach Terminal Geometry, Parallel and Flared
8	End Treatment - Approach Terminal Geometry, Curbed and Double Faced
9	End Treatment - Trailing Anchorage
10	End Treatment - Component Details
11	End Treatment - Controlled Release Terminal (CRT) System
12	Layout for CRT System - Side Roads and Driveways
13	Approach Transition Connection to Rigid Barrier - General, TL-3
14	Approach Transition Connection to Rigid Barrier - Low-Speed, TL-2
15	Approach Transition Connection to Rigid Barrier - Details
16	Approach Transition Connection to Rigid Barrier - Double Faced Guardrail
17	Layout to Rigid Barrier - Approach Ends
18	Layout to Rigid Barrier - Approach Ends with Double Faced Guardrail Layout to Rigid Barrier - Trailing Ends
19	Rub Rail Details
20	Pedestrian Safety Treatment - Pipe Rail
21	Modified Mount - Special Steel Post for Concrete Structure Mount; Modified Mount - Encased Post for Shallow Mount; Modified Mount - Frangible Leave-Out for Concrete Surface Mount
22	Barrier Delineators - Post Mounted; Clear Space - Reduced Post Spacing for Hazards; ⅝" Button-Head Bolt System

GENERAL NOTES:

1. INSTALLATION: Construct guardrail in accordance with Specification 536.

   This Index, along with the plans and the manufacturers' drawings on the Approved Products List (APL), is sufficiently detailed for installation of General Guardrail, Low-Speed Guardrail, End Treatment assemblies, and their connecting options shown herein. This precludes requirements for shop drawing submittals unless otherwise specified in the plans.

2. COMPATIBILITY: The General Guardrail in this Index is based on the Midwest Guardrail System (MGS) design, with an approximate height of 31" at the top of the Panel (2'-1" mounting height at vertical ℄ of Panel) and a midspan panel splice as shown on Sheet 2. Guardrail components included on the APL, which are compatible with this Index, may also be identified as 31" or MGS Guardrail.

3. STANDARD COMPONENTS: Standard guardrail components, including posts, panels, and bolt systems, are based upon English unit conversions of the AASHTO-AGC-ARTBA Joint Committee Task Force 13 Report: A Guide to Standardized Highway Barrier Hardware (http://www.aashtotf13.org/Barrier-Hardware.php).

4. BUTTON-HEAD BOLTS: Install Button-Head Bolts where indicated using bolts, nuts, and washers as defined on Sheet 22. Place washers under nuts. Do not place washers between bolt heads and panels, except where otherwise shown in this Index.

5. HEX-HEAD BOLTS: Install Hex-Head Bolts where indicated using bolts, nuts, and washers in accordance with material properties of Specification 967. Place washers under nuts.

6. MISCELLANEOUS ASPHALT PAVEMENT: Install Miscellaneous Asphalt Pavement where indicated with a tolerance of ± ½" depth and in accordance with Specification 339.

7. ADJACENT SIDEWALKS & SHARED USE PATHS: When guardrail posts are placed within 4'-0" of a sidewalk or shared use path, use timber posts, or use steel posts only if treated with Pipe Rail as shown on Sheet 20.

   When timber posts are used, one of the following safety treatments is required for the bolt(s) protruding from the back face of the posts:

   a. After tightening the nut, trim the protruding post bolt flush with the nut and galvanize per Specification 562.
   b. Use post bolts 15" in length and countersink the washer and nut between 1" and 1½" deep into the back face of the post.
   c. Use 15" post bolts with sleeve nuts and washers.

   When End Treatment posts are within 4'-0" of a sidewalk or shared use path, steel posts are not permitted within the End Treatment segment. Terminate the Pipe Rail outside of End Treatment segments, as noted per Sheet 20.

8. NESTED W-BEAM: Where called for in the plans, install two W-Beam Panels mounted flush per location, securing all panels with Button-Head Bolts threaded through aligned slots and holes. 2" Button-Head Bolts are permitted for panel splice locations.

9. CONNECTION TO RIGID BARRIER: The connections to Rigid Barrier in this Index only apply to newly constructed bridge Traffic Railing and Concrete Barrier or where the complete Approach Transition Connection to Rigid Barrier shown herein can be installed without conflicting with existing Traffic Railings, structures, or approach slabs.

   For connecting guardrail to existing bridge Traffic Railings, see the layouts and details of Indexes 536-002, 521-404, and 421-405.

10. CONNECTION TO EXISTING GUARDRAIL: Where a transition to existing guardrail at 27" height is required, linearly transition the guardrail height over a distance ranging from 25'-0" to 31"-3". Provide an immediate transition to the required midspan splice using the available panel options on Sheet 4 (9'-4½" or 15'-7½" panel).

11. PLANS CALLOUTS: Begin/End Station labels are shown throughout this Index as they correspond to the station and offset callouts specified in the plans.

    In the plans, Begin/End Guardrail Station refers to the General TL-3 Guardrail Pay Item, and it may be abbreviated as Begin/End GR. Station. Where the Low-Speed TL-2 Guardrail Pay Item is specifically required, the callout in the plans will then specify Begin/End TL-2 GR. Station.

12. QUANTITY MEASUREMENT: Measure guardrail and corresponding components as defined in Specification 536. The Guardrail length is measured along the centerline of installed Panels, between the points labeled Begin/End Guardrail Station shown on the following Index Sheets and defined in the plans (typically measured from the ℄ of the panel's post bolt slots at the approach/trailing ends).

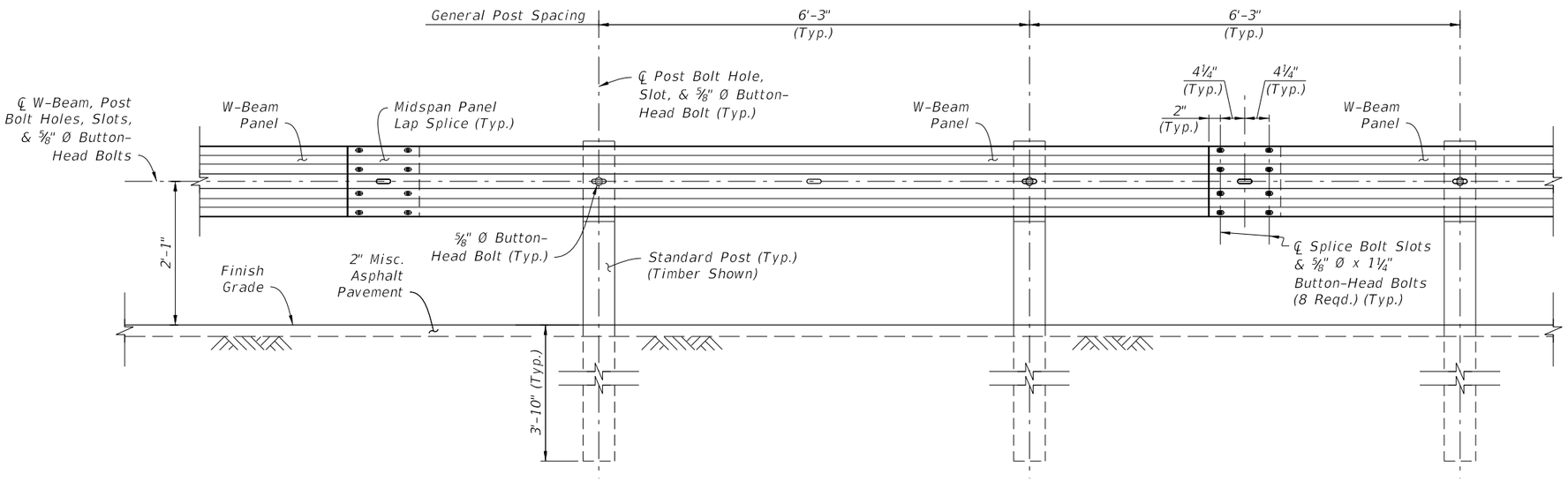

GENERAL GUARDRAIL
INSTALLED ELEVATION

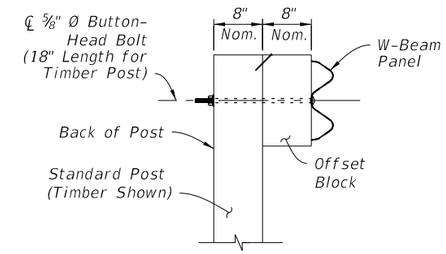

INSTALLED SECTION

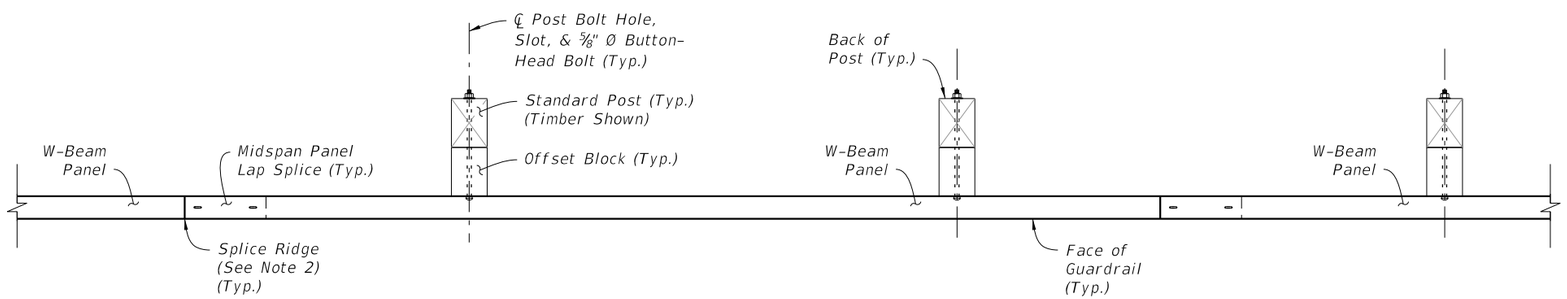

INSTALLED PLAN

NOTES:

1. GENERAL: Install the General Guardrail configuration where indicated in the plans. This may include tapered segments if called for in the plans.

   Use 12'-6" or longer W-Beam Panels. A single 6'-3" Panel may be used at the end of the run to meet the nominal Begin/End Guardrail Sta. requirements.

   Where a differing guardrail configuration is required for constructability beyond the options shown in this Index or the plans, obtain approval from the Engineer prior to installation.

2. MIDSPAN PANEL LAP SPLICE: For proper structural function, place all Lap Splices at midspan unless otherwise indicated.

   Lap the Panels with the Splice Ridge oriented downstream of the final Direction of Traffic in the nearest traffic lane. For reverse lane conditions, orient the Splice Ridge downstream of the lane direction with the highest traffic volume. Orienting Lap Splices for Temporary Traffic Control phasing is not required.

3. CONNECTION DETAILS: Connections to End Treatments, Approach Transitions, or other segment types are defined in the following Index Sheets, APL Drawings, or the plans.

4. W-BEAM PANEL DETAILS: See Sheet 4.

5. POST & OFFSET BLOCK DETAILS: See Sheet 5.

6. GUARDRAIL SECTIONS: For Sections showing typical mounting heights, grading, and lateral offsets in relation to adjacent roadway features, see Sheet 6.

7. MODIFIED MOUNTS: Where concrete structures, concrete sidewalk, or shallow depth conditions are encountered, see Sheet 21 for additional post mounting options.

8. DEFINED SEGMENTS: The General Guardrail shown provides the base configuration, including Post Spacing and splice locations, for Defined Segment modifications where indicated in the plans and using the Guardrail Types, Sections, and/or hardware as shown in this Index (e.g. Double Faced W-Beam, Modified Thrie-Beam, Deep Posts at Slope Breaks, Pipe Rail, Rub Rail, or Reduced Post Spacing for Hazards).

GENERAL, TL-3 GUARDRAIL DETAILS

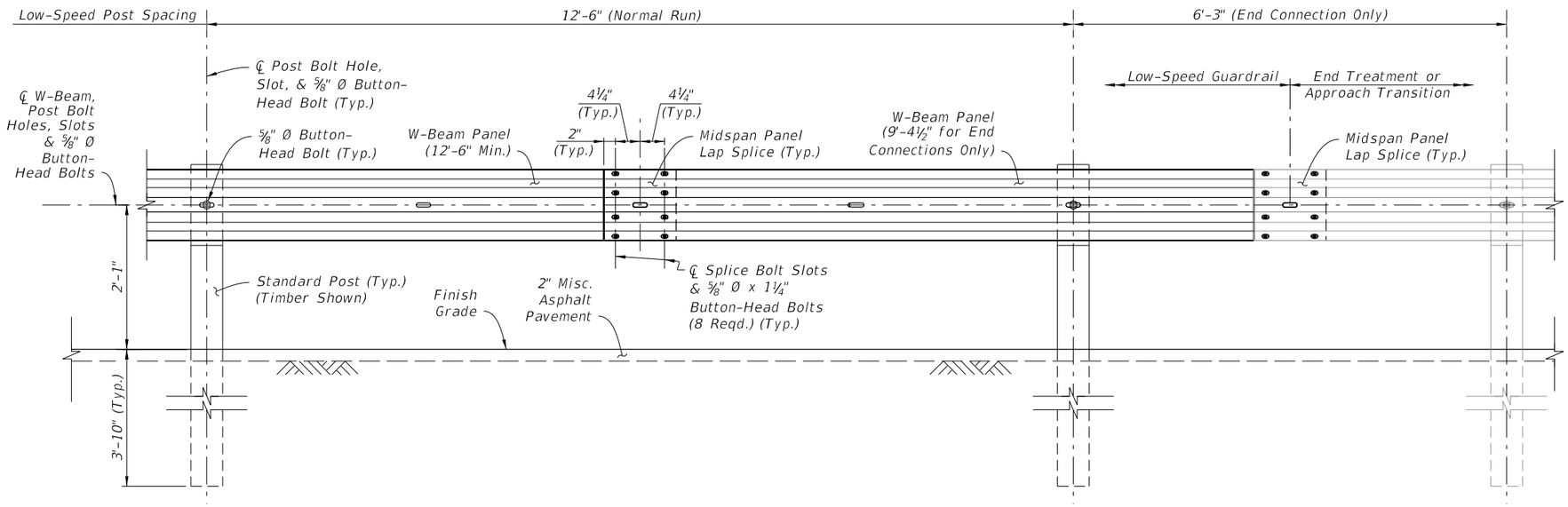

LOW-SPEED GUARDRAIL
INSTALLED ELEVATION

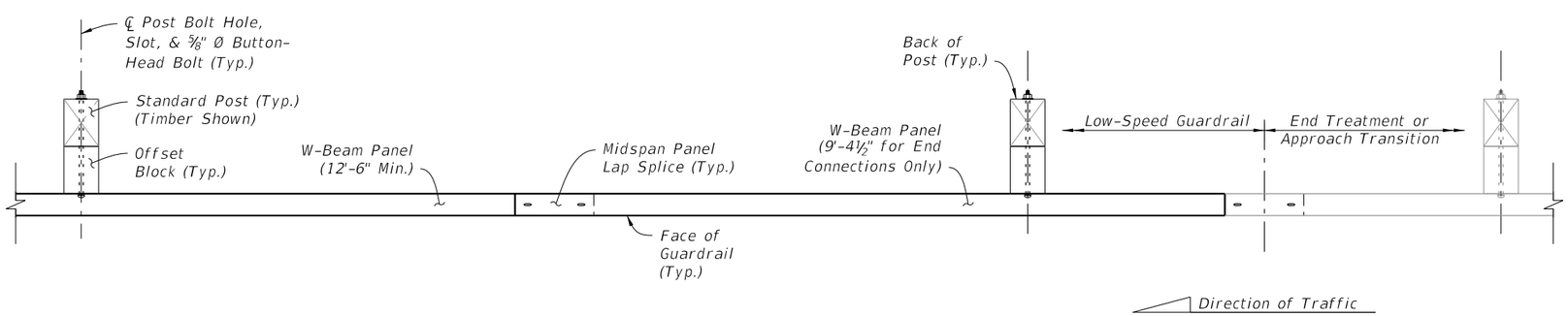

INSTALLED PLAN

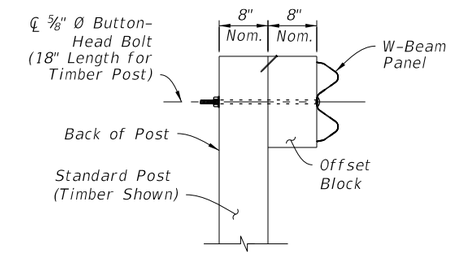

INSTALLED SECTION

NOTES:

1. GENERAL: Install the Low-Speed Guardrail configuration where indicated in the plans. Low-Speed Guardrail may include tapered segments if called for in the plans.

   Use 12'-6" or 25'-0" W-Beam Panels for normal spans, and use 9'-4½" Panels for end connections to adjoining segments as shown. A single 6'-3" Panel may be used at the end of the Low-Speed Guardrail run along with a single reduced 6'-3" post spacing to meet the nominal Begin/End Guardrail Sta. required.

   Where a differing guardrail configuration is required for constructability beyond the options shown in this Index or the Plans, obtain approval from the Engineer prior to installation.

2. MIDSPAN PANEL LAP SPLICE: For proper structural function, place all Lap Splices at midspan unless otherwise indicated.

   Lap the Panels with the Splice Ridge oriented downstream of the final Direction of Traffic in the nearest traffic lane. For reverse lane conditions, orient the Splice Ridge downstream of the lane direction with the highest traffic volume. Orienting Lap Splices for Temporary Traffic Control phasing is not required.

3. CONNECTION DETAILS: Connections to End Treatments, Approach Transitions, or other segment types are defined in the following Index Sheets, APL Drawings, or the plans.

4. W-BEAM PANEL DETAILS: See Sheet 4.

5. POST & OFFSET BLOCK DETAILS: See Sheet 5.

6. GUARDRAIL SECTIONS: For Sections showing typical mounting heights, grading, and lateral offsets in relation to adjacent roadway features, see Sheet 6.

7. MODIFIED MOUNTS: Where concrete structures, concrete sidewalk, or shallow depth conditions are encountered, see Sheet 21 for additional post mounting options.

8. RESTRICTIONS: Low-Speed Guardrail segments are not permitted for use with items including, but not limited to, Double Faced W-Beam, Modified Thrie-Beam, Deep Posts at Slope Breaks, Pipe Rail, and/or Rub Rail.

LOW-SPEED, TL-2 GUARDRAIL DETAILS

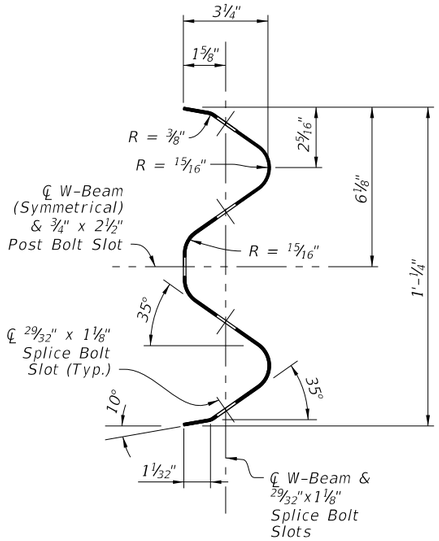

W-BEAM PANEL SECTION

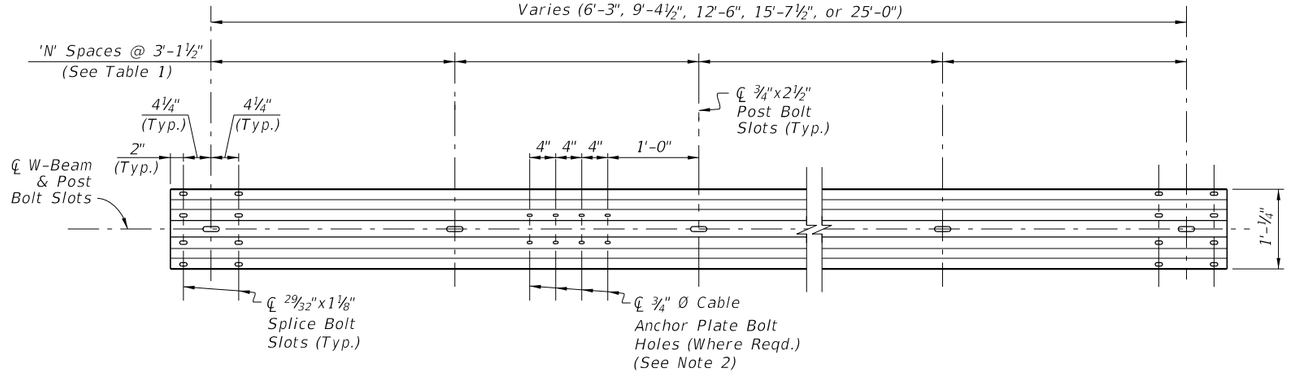

W-BEAM PANEL ELEVATION

PANEL SUMMARY TABLE:

Panel Type	Number of Spaces 'N'	Gauge
6'-3" W-Beam	2	12
9'-4½" W-Beam	3	12
12'-6" W-Beam	4	12
15'-7½" W-Beam	5	12
25'-0" W-Beam	8	12
3'-1½" Thrie-Beam	1	10
6'-3" Thrie-Beam	2	12
12-6" Thrie-Beam	4	12
25-0" Thrie-Beam	8	12
Thrie-Beam Trans.	2	10

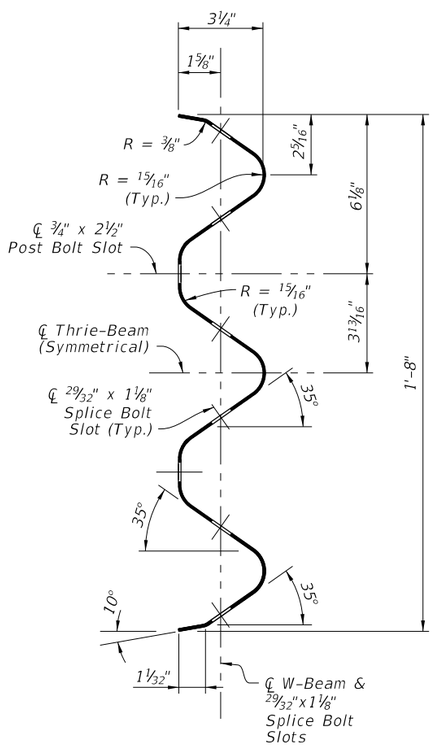

THRIE-BEAM PANEL SECTION

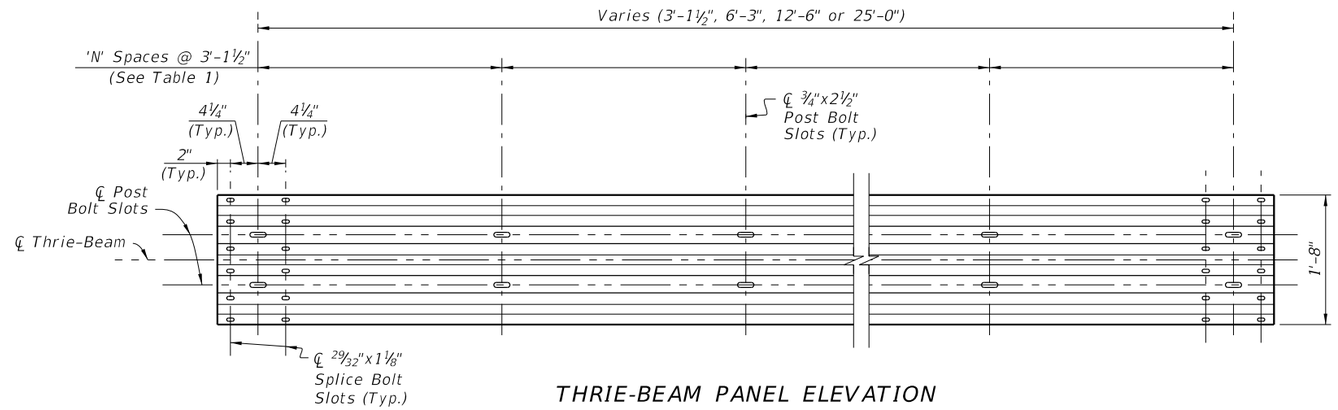

THRIE-BEAM PANEL ELEVATION

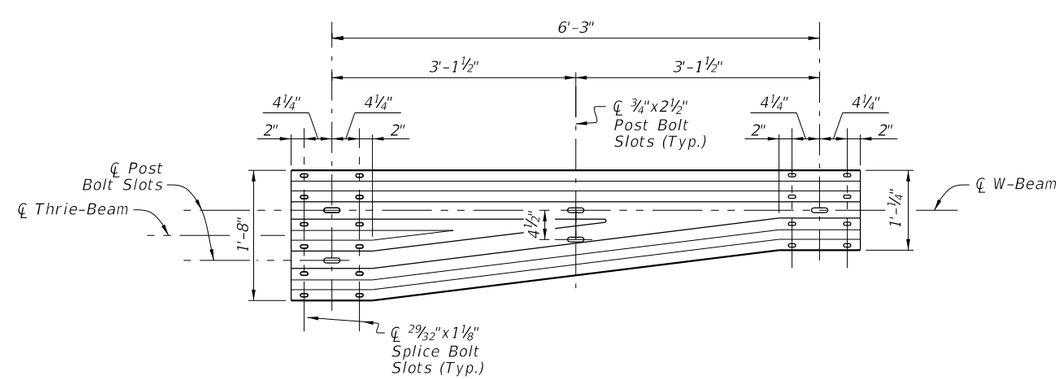

THRIE-BEAM TRANSITION PANEL ELEVATION
(Reverse Direction Similar by Opposite Hand)

NOTES:

1. MATERIALS:
   Use corrugated steel panels in accordance with Specification 967 and made from either Class A, 12 gauge steel or Class B, 10 gauge steel as specified in the 'Panel Summary Table' above.

2. CABLE ANCHOR PLATE BOLT HOLES:
   Include ¾" Ø Cable Anchor Plate Bolt Holes only where required for installation of the Cable Anchor Plate shown on Sheet 9, 10, & 11.

   29/32" x 1⅛" slots may substitute for the ¾" Ø holes shown.

W-BEAM AND THRIE-BEAM PANEL DETAILS

10/25/2018 9:03:04 AM

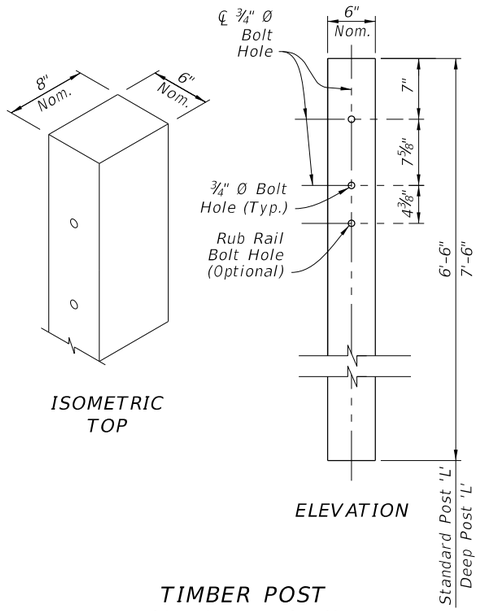

TIMBER POST
(6"X8" Nominal)

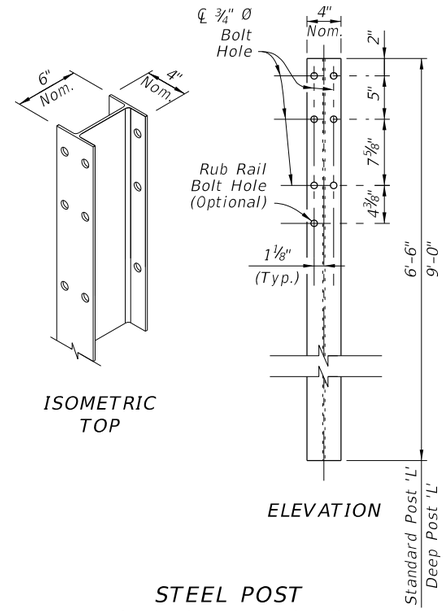

STEEL POST
(W6X8.5 or W6X9)

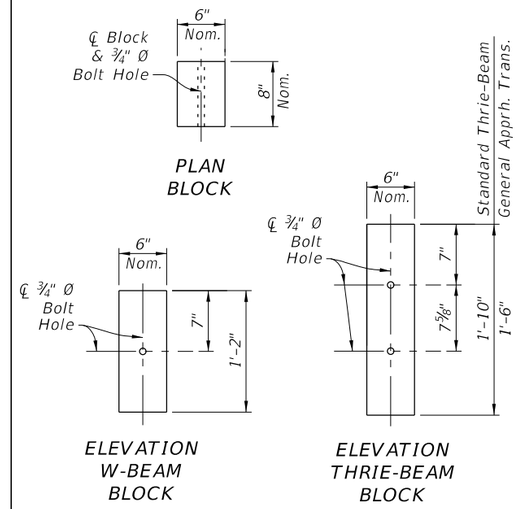

TIMBER OFFSET BLOCK
(6"X8" Nominal)

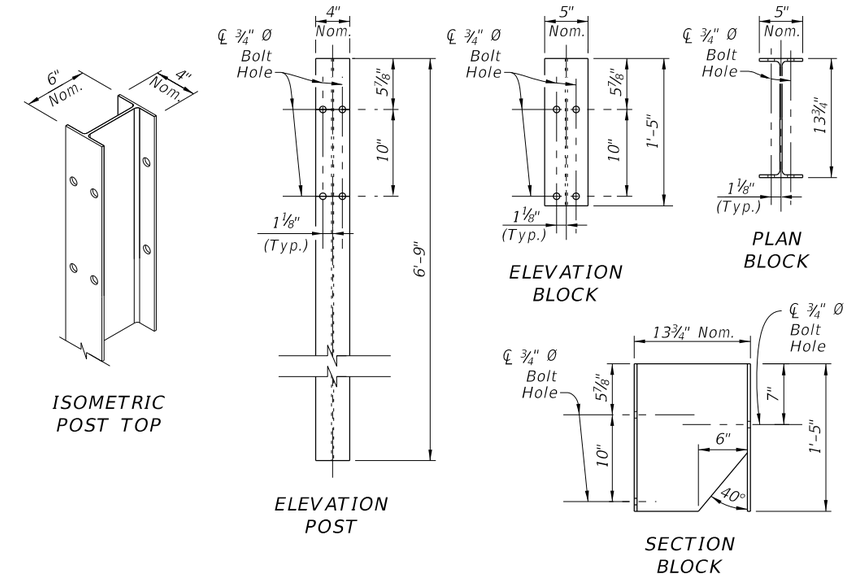

MODIFIED THRIE-BEAM SYSTEM
(W6X8.5 or W6X9 Steel Post & W14X22 Steel Block)

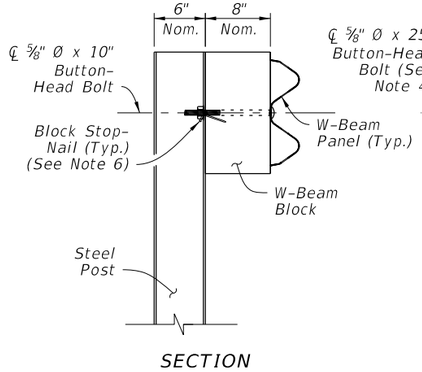

W-BEAM
STEEL POST
(Timber Post
Similar)

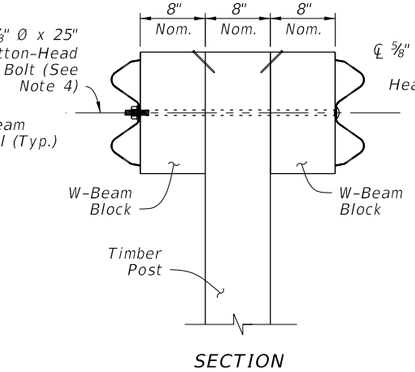

DOUBLE FACED W-BEAM
TIMBER POST
(Thrie-Beam Similar)
(Steel Post Similar)

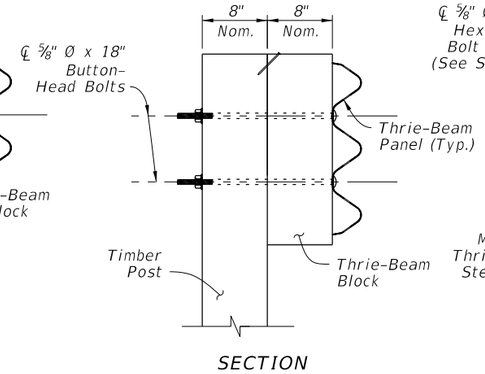

THRIE-BEAM
TIMBER POST
(Steel Post Similar)

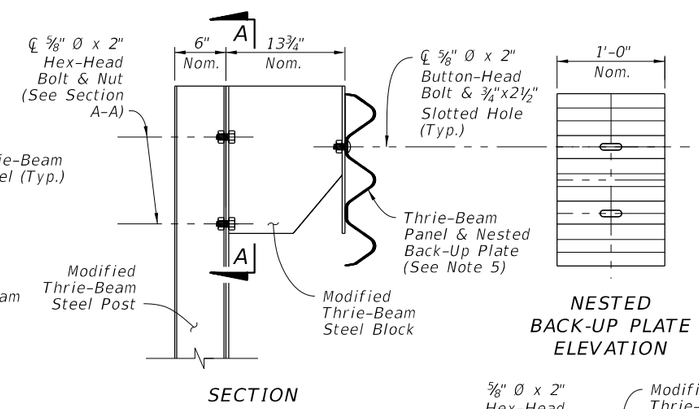

MODIFIED
THRIE-BEAM
(Steel Post Only)

NOTES:

1. STANDARD POSTS: Where Standard Posts are called for in this Index, use either a Timber Post or Steel Post at the Length, 'L', shown for Standard Posts. Use a single post material type consistently per each run of guardrail. Only where specified in the Plans, use the Deep Post 'L' for Slope Break Conditions as shown on Sheet 6.
2. OFFSET BLOCKS: For each Panel type, install the corresponding Offset Block type as shown. For General, TL-3 (Single Faced) Approach Transitions only, use the 1'-6" Thrie-Beam Block (See Sheet 13).
3. BOLT HOLES: ¾" Ø Bolt Holes shown in posts within this Index may be substituted with 13/16" Ø Bolt Holes.
4. DOUBLE FACED GUARDRAIL: Orient Post Bolts with the Button-Head located on the side nearest the traffic lane. The bolt's threaded portion is not permitted to extend beyond ¾" from the face of the tightened nut; trim the threaded portion as needed and galvanize in accordance with Specification 562.
5. MODIFIED THRIE-BEAM NESTED BACK-UP PLATE: At each post connection, install a Nested Back-up Plate between the Thrie-Beam Panel and the post. The Nested Back-up Plate has a cross-section and material matching the Thrie-Beam Panel Section.
6. BLOCK STOP-NAIL: Drive one nail per Standard Offset Block as shown to prevent Block rotation. Use steel 3½" Type 16d nails with ASTM A153 hot-dip galvanization. For steel posts, drive the nail through the unused flange Bolt Hole and bend the nail so its head contacts the flange.
7. MATERIALS: Use timber and steel posts and offset blocks in accordance with Specification 967. Composite offset blocks may be substituted as approved on the APL. Use a single offset block type consistently per each run of guardrail. Steel offset blocks are only permitted for Modified Thrie Beam.

POST AND OFFSET BLOCK DETAILS

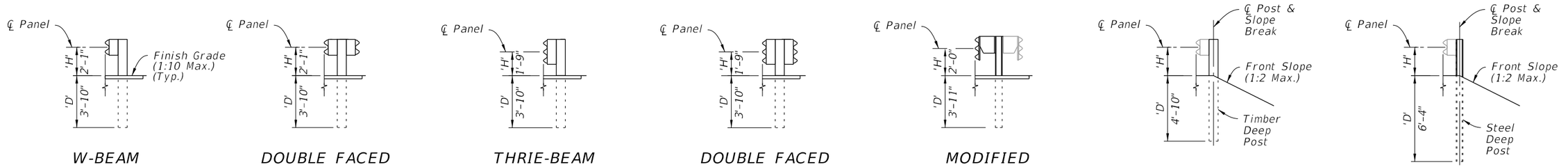

GUARDRAIL TYPES - MOUNTING HEIGHTS & POST DEPTHS

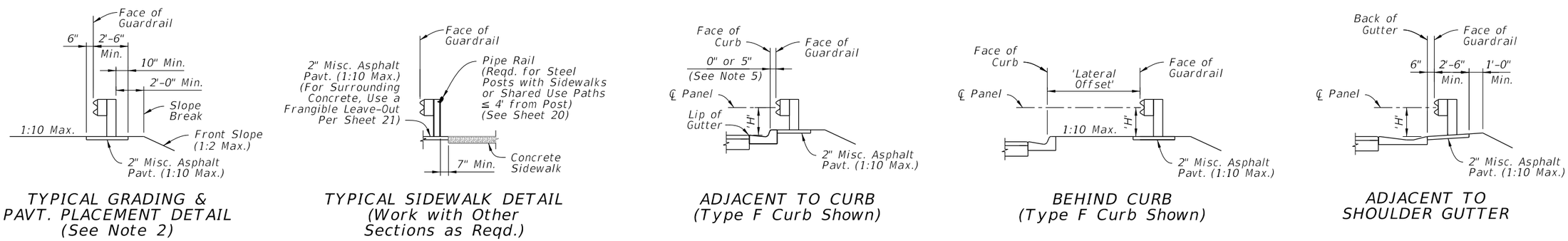

GUARDRAIL SECTIONS - TYPICAL

GUARDRAIL SECTIONS - CURB & GUTTER

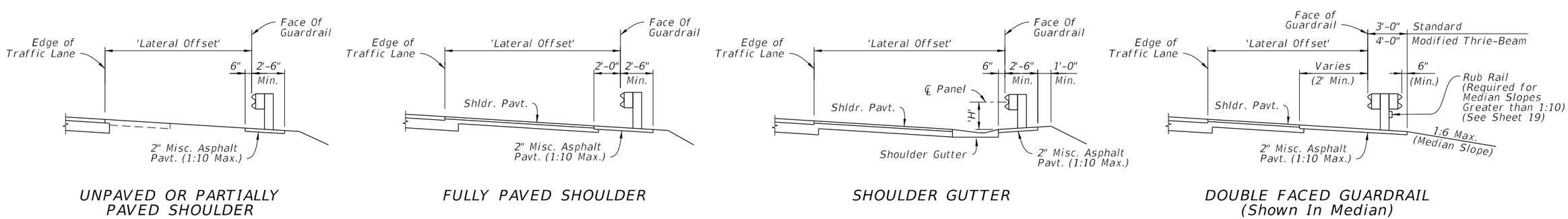

GUARDRAIL SECTIONS - SHOULDERS

GUARDRAIL HEIGHT SUMMARY TABLE:			
Type:	Min. Depth 'D':	Mounting Height 'H':	Post Length 'L':
W-Beam (Single and Double Faced)	3'-10"	2'-1"	6'-6"
Thrie-Beam (Single and Double Faced)	3'-10"	1'-9"	6'-6"
Modified Thrie-Beam	3'-11"	2'-0"	6'-9"
Timber Deep Post	4'-10"	See Above	7'-6"
Steel Deep Post	6'-4"	See Above	9'-0"

NOTES:

1. GUARDRAIL SECTIONS: Construct Sections as indicated in the plans. The details shown herein depict W-Beam Guardrail, but are applicable to the other defined Guardrail Types placed at the corresponding height, 'H'. Use components per Sheets 4 & 5. Steel and timber post types are interchangeable unless otherwise defined. The 1:10 Max. cross slope shown is the maximum slope permitted for proper guardrail function, but project-specific cross slope requirements are governed per the plans.

2. TYPICAL GRADING & PAVEMENT PLACEMENT DETAIL: Construct features as depicted except where superceded by specific Guardrail Sections or the plans. Place the Slope Break a Minimum of 2' behind the post. For Deep Posts, the slope break may be placed at the ℄ Post with the 2" Miscellaneous Asphalt Pavement omitted.

3. SLOPE BREAK CONDITION: Install Deep Posts only where called for in the plans. Deep Posts are only permitted where post spacing is 6'-3" or less.

4. LATERAL OFFSETS: The Lateral Offsets shown are governed by the station and offset call outs for Face of Guardrail, as shown in the plans.

5. ADJACENT TO CURB: Place the Face of Guardrail consistently offset either flush with the Face of Curb or 5" behind the Face of Curb, as indicated by the plans station and offset callout. For offset changes, transition the Face of Guardrail as shown in the plans.

GUARDRAIL SECTIONS

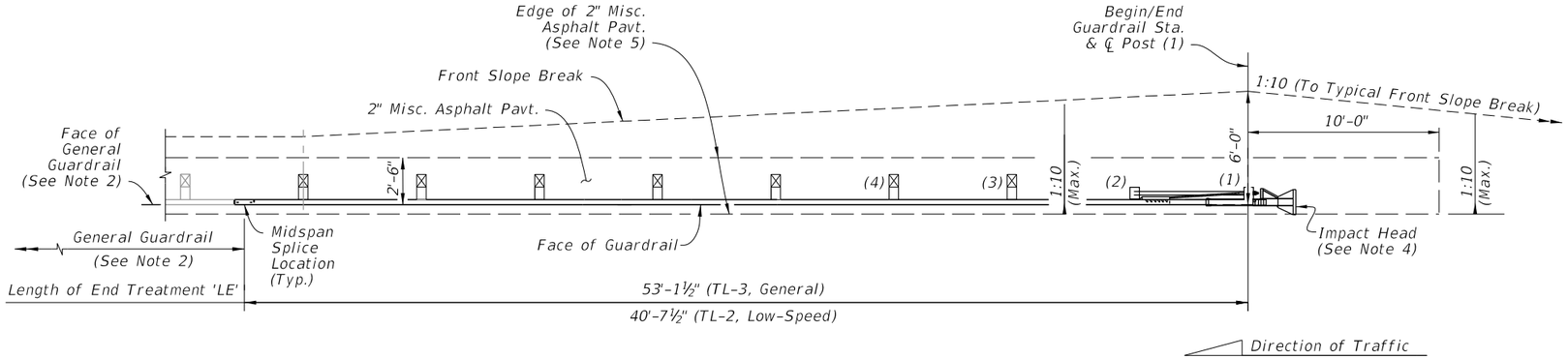

APPROACH TERMINAL ASSEMBLY
'PARALLEL' SEGMENT - PLAN VIEW

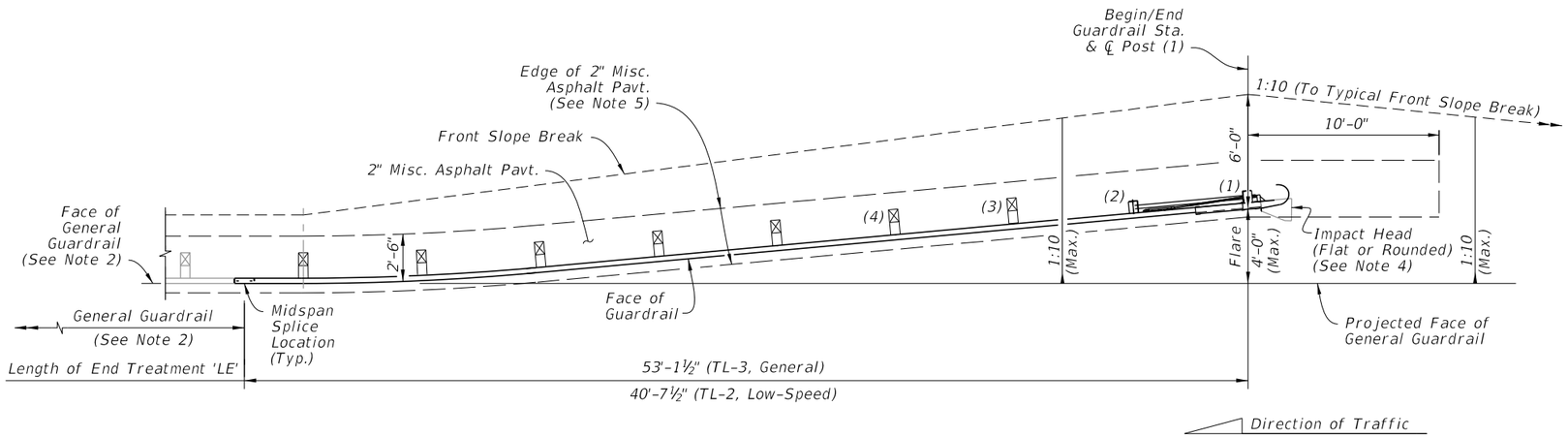

APPROACH TERMINAL ASSEMBLY
'FLARED' SEGMENT - PLAN VIEW

NOTES:

1. INSTALLATION: Locate Approach Terminals where called for in the plans, with the Post (1) ℄ placed at the Begin/End Guardrail Station indicated in the plans.

   The Plan Views shown herein are schematic only, showing basic geometry for Approach Terminals listed on the APL. The predefined Length of End Treatment, 'LE', includes the proprietary portion of various Approach Terminals and provides for more consistent planning of assembly installations across the differing Approach Terminal types. Forward-anchoring style Approach Terminals may vary from the planned lengths shown by up to 3'-0".

   Construct Approach Terminals as shown in the APL and in accordance with the manufacturer's unique drawing details, procedures, and specifications.

   Install posts in accordance with the manufacturer's drawings. The Special Posts on Sheet 21, including Special Steel Posts, Encased Posts, and Frangible Leave-Outs, are not permitted within the Approach Terminal segment unless otherwise called for in the plans.

   Align panel lap splices in accordance with the manufacturer's drawings, regardless of the direction of traffic.

   Install adjacent grading, gutters, and/or curbing as shown herein, unless otherwise specified in the plans.

2. GENERAL GUARDRAIL: General Guardrail typically includes Panels and Post Spacing as shown on Sheet 2, including parallel and tapered segments.

   Approach Transitions, Low-Speed Guardrail, or Reduced Post Spacing Guardrail segments may be substituted for the General Guardrail shown herein if indicated in the plans.

3. APPROACH TERMINAL TEST LEVEL: Install either a Test Level 3 (TL-3) or Test Level 2 (TL-2) Approach Terminal as specified in the plans. TL-3 Approach Terminals may substitute for TL-2 Approach Terminals unless the substitution is specifically prohibited in the plans. TL-2 Approach Terminals may not substitute for TL-3 installations.

4. IMPACT HEAD END DELINEATOR: Apply Yellow Retroreflective Sheeting to the nose of the End Terminal in accordance with Specification 536.

5. 2" MISCELLANEOUS ASPHALT PAVEMENT: The Plan Views shown herein depict the Unpaved Shoulder condition. For Fully Paved Shoulder and Shoulder Gutter conditions, extend the 2" Misc. Asphalt Pavement as shown in the corresponding 'Section at Post (1)' details below.

6. 'CURBED' AND 'DOUBLE FACED' GUARDRAIL SEGMENTS: See Sheet 8.

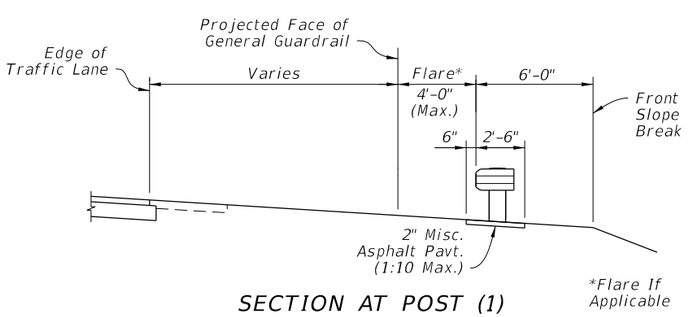

SECTION AT POST (1)
WITH UNPAVED SHOULDER

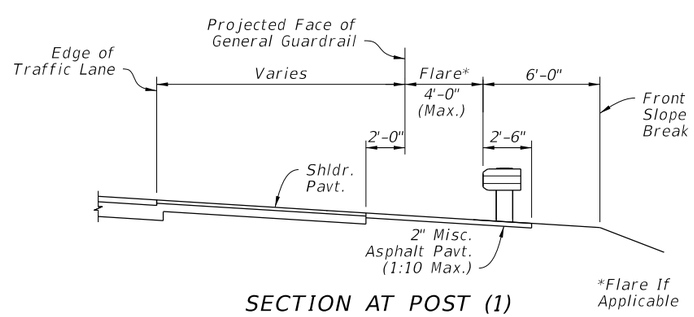

SECTION AT POST (1)
WITH FULLY PAVED SHOULDER

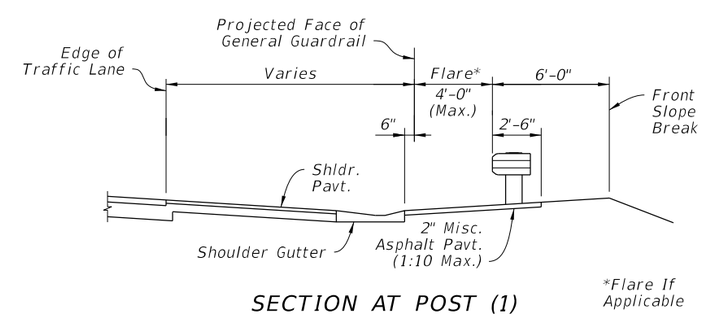

SECTION AT POST (1)
WITH SHOULDER GUTTER

END TREATMENT - APPROACH TERMINAL GEOMETRY PARALLEL AND FLARED

10/25/2018 9:03:07 AM

LAST REVISION	REVISION	DESCRIPTION:			INDEX	SHEET
11/01/17			FY 2019-20 STANDARD PLANS	GUARDRAIL	536-001	7 of 22

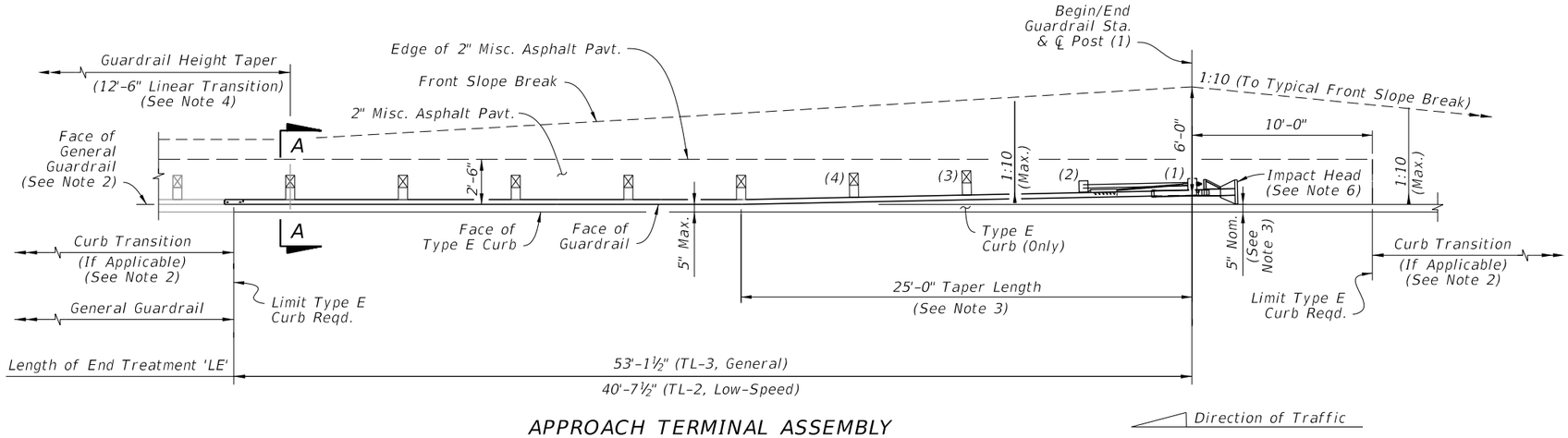

APPROACH TERMINAL ASSEMBLY
'CURBED' SEGMENT - PLAN VIEW

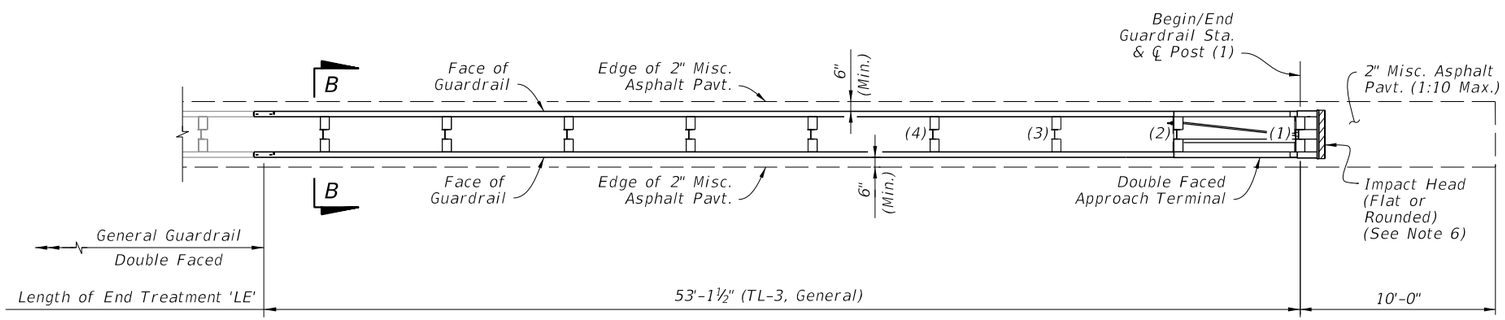

APPROACH TERMINAL ASSEMBLY
'DOUBLE FACED' SEGMENT - PLAN VIEW

NOTES:

1. GENERAL: See Notes 1 through 3 on Sheet 7.

2. CURBED SEGMENTS: Type E curb is required within the limits shown. When a different curb type is called for outside of the Type E curb limits, transition the curb shape linearly, over a nominal distance ranging 5'-0" to 10'-0"

3. TAPER LENGTH: For Curbed Segments, taper the guardrail away from the roadway where shown to place the inside edge of the Impact Head at 5" behind the face of the curb. Where additional lateral offset is required to fit the Approach Terminal Assembly hardware, such as a soil plate, place the Impact Head as close to the curb as the hardware allows, not to exceed 2'-0" from the face of curb.

4. GUARDRAIL HEIGHT TAPER: For Curbed Segments, the connecting General Guardrail Mounting Height, 'H', is typically measured from the Lip of Gutter (See Sheet 6 Guardrail Sections, 'Adjacent to Curb'), while the End Terminal Assembly 'H' is measured from the Misc. Asphalt Pavt. (See Section A-A). Linearly taper the difference in Mounting Height over a minimum length of 12'-6", starting where indicated herein.

5. DOUBLE FACED SEGMENT: Connect to Double Faced General Guardrail. Use consistent Posts and Offset Block types as specified in the APL drawings over the entire Length of End Treatment, 'LE'. Posts and Offset Blocks in the adjoining General Guardrail segment may be different from those inside of the 'LE'. A change in post type between timber and steel is permitted, immediately outside of the 'LE' segment.

   Maintain the 1:10 maximum grading as shown in Section B-B throughout segment 'LE'. Where required, transition to differing adjacent slopes linearly, over a minimum longitudinal length of 25'-0".

6. IMPACT HEAD END DELINEATOR: Apply Yellow Retroreflective Sheeting to the nose of the End Terminal in accordance with Specification 536.

7. SINGLE FACED 'PARALLEL' AND 'FLARED' SEGMENTS: See Sheet 7.

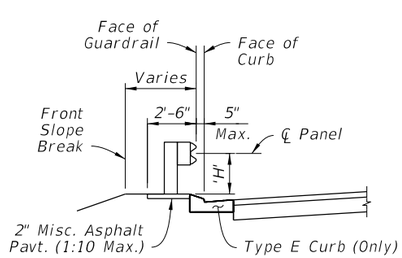

'CURBED' SECTION A-A
(Height, 'H', Measured from
Misc. Asphalt Pavt.)

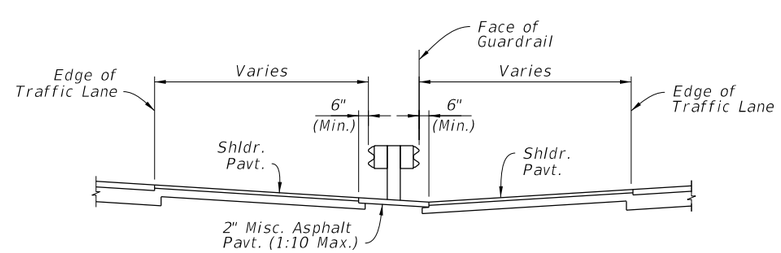

'DOUBLE FACED' SECTION B-B
(1:10 Slope or Flatter Reqd.)

END TREATMENT -
APPROACH TERMINAL GEOMETRY
CURBED AND DOUBLE FACED

10/25/2018 9:03:07 AM

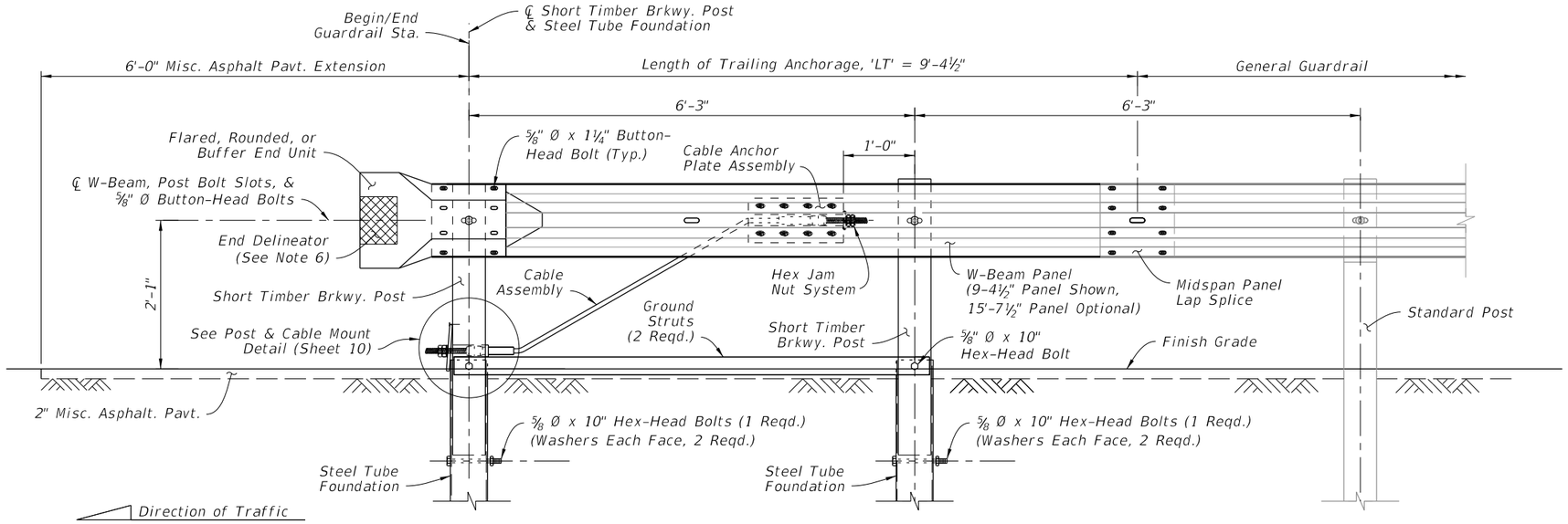

INSTALLED ELEVATION

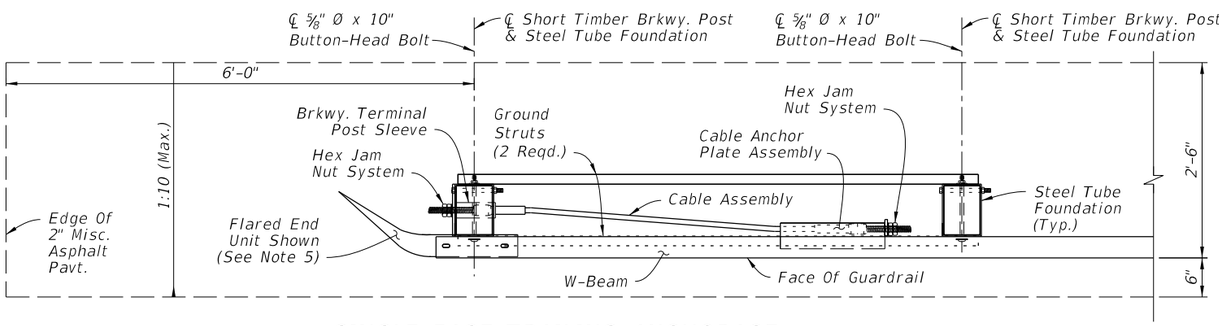

SINGLE FACE TRAILING ANCHORAGE
INSTALLED PLAN

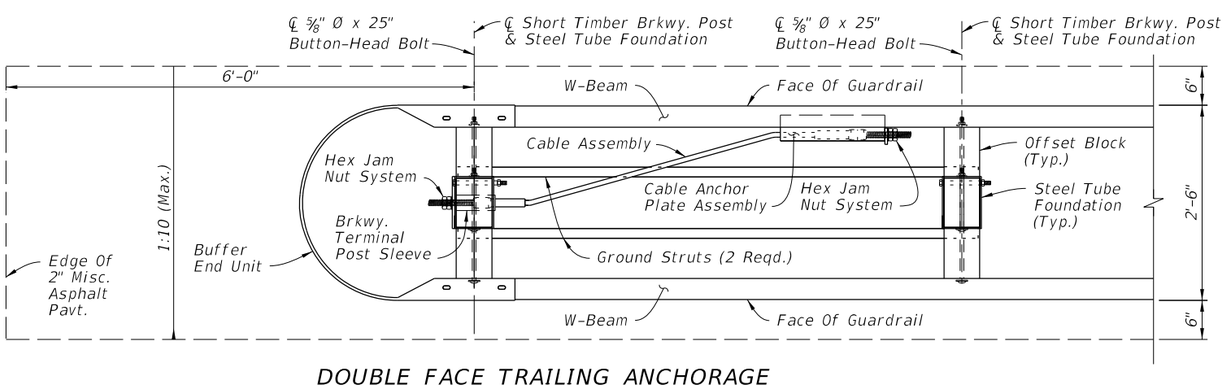

DOUBLE FACE TRAILING ANCHORAGE
INSTALLED PLAN

NOTES:

1. COMPONENT DETAILS: For additional component details, See Sheet 10.
2. END UNITS: Use materials for end units as defined in Specifications Section 967. End Units are referred to as "End or Buffer Sections" in AASHTO M180.

   Lap the Flared End Unit behind the W-Beam; lap the Rounded and Buffered End Units over the face of the W-Beam.
3. FOUNDATIONS: Install Steel Tubes with attached Soil Plates by either of the following methods:

   a. Excavate, backfill, and compact material to provide full passive soil resistance to all surfaces of the Tube and Soil Plate.

   b. Drive the Tube and Soil Plate as a single unit using a dummy timber post to prevent damage to the Breakaway Post.
4. GENERAL GUARDRAIL: General Guardrail typically includes Panels and Post Spacing as shown on Sheet 2, including parallel and tapered segments. Transitions, Low-Speed Guardrail, or Reduced Post Spacing Guardrail segments may be substituted for the General Guardrail shown herein if indicated in the plans.
5. SIDEWALK REQUIREMENTS: When sidewalks are located adjacent to the End Treatment, install a Rounded End Unit (Flared End Unit not permitted for this case).
6. END DELINEATOR: Mount retroreflective sheeting to the approach face of the End Unit in accordance with Specification Sections 536 and 967.

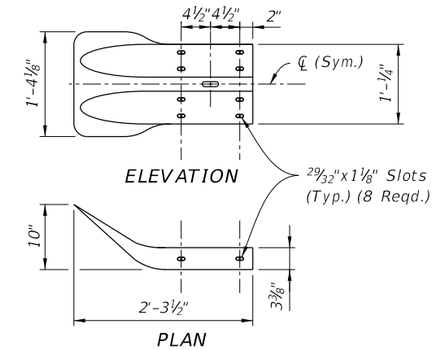

FLARED END UNIT

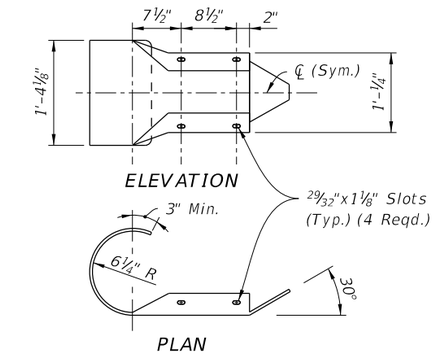

ROUNDED END UNIT

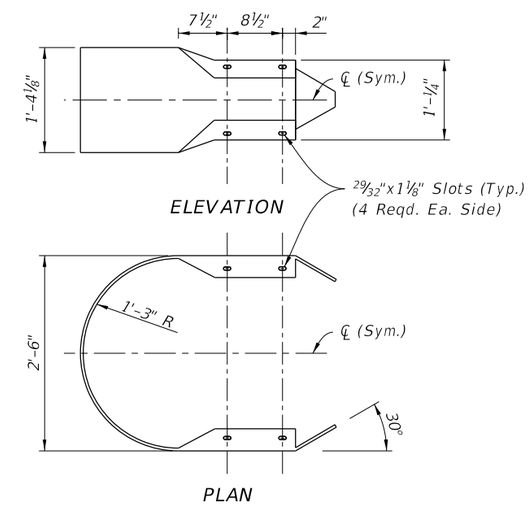

BUFFER END UNIT

END TREATMENT - TRAILING ANCHORAGE

10/25/2018 9:03:08 AM

LAST REVISION	REVISION	DESCRIPTION:			INDEX	SHEET
11/01/18			FDOT FY 2019-20 STANDARD PLANS	GUARDRAIL	536-001	9 of 22

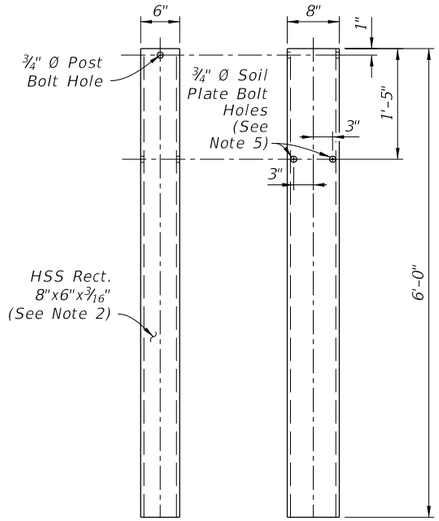

STEEL TUBE FOUNDATION

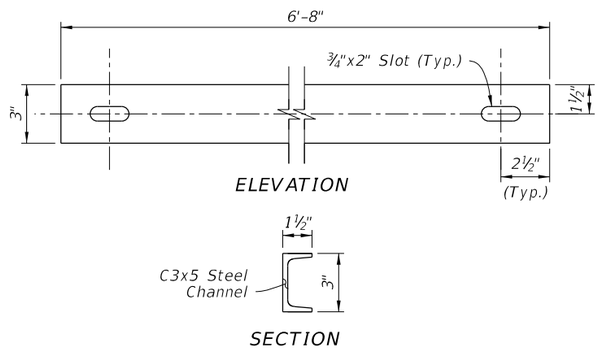

GROUND STRUT

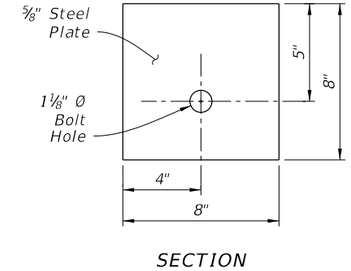

BEARING PLATE

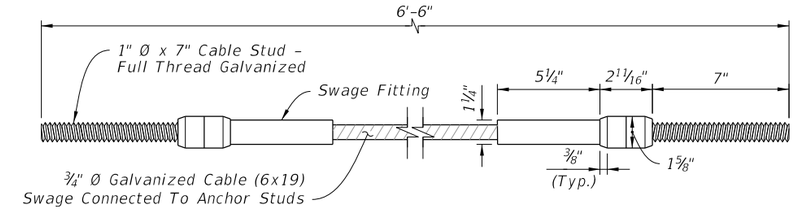

CABLE ASSEMBLY

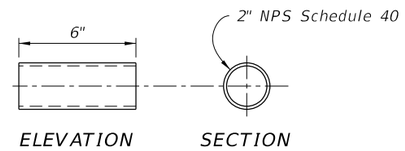

BREAKAWAY TERMINAL POST SLEEVE

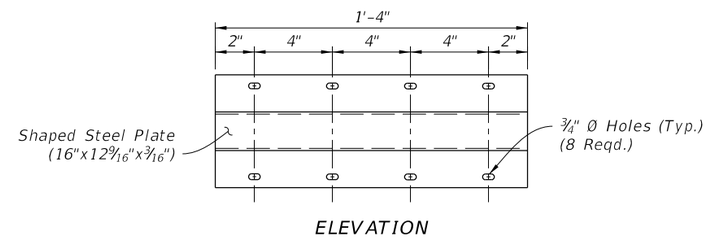

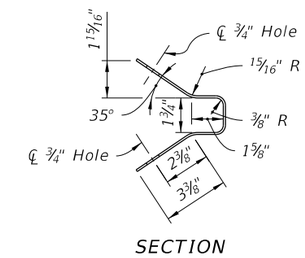

CABLE ANCHOR PLATE

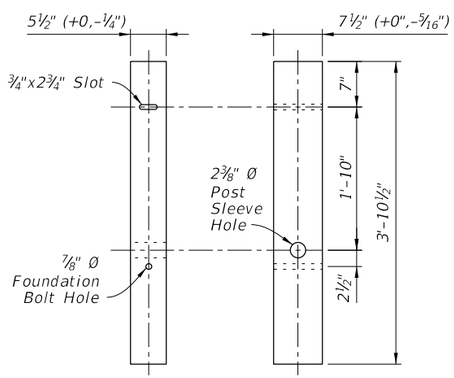

SHORT TIMBER BREAKAWAY POST (6"x8" Nom.)

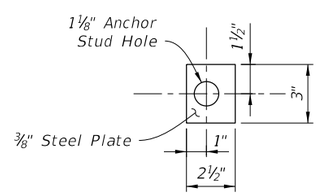

STEEL END PLATE

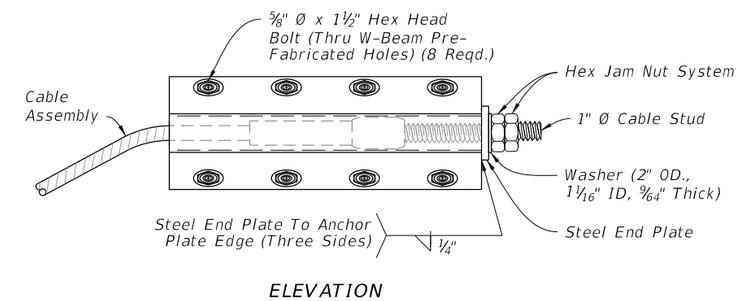

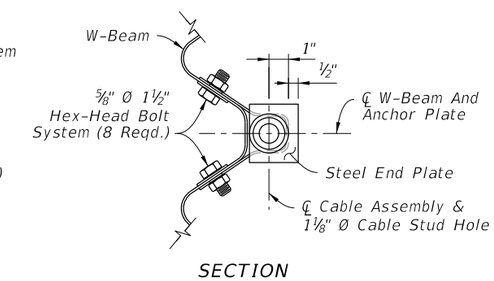

CABLE ANCHOR PLATE ASSEMBLY

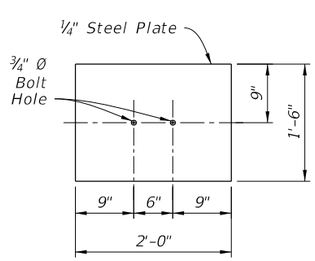

SOIL PLATE

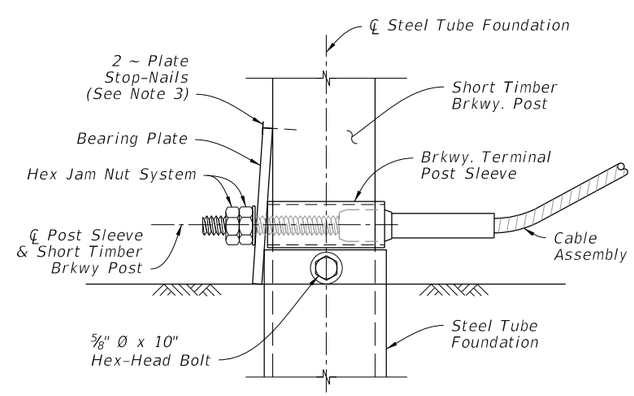

POST & CABLE MOUNT ASSEMBLY

NOTES:

1. INSTALLATION: Use components as shown on Sheets 9 & 11.
2. MATERIALS: Use steel plates, channels, and Cable Assemblies in accordance with Specification 967.

   Use Short Timber Breakaway Posts and Steel Tube Foundations in accordance with Specification 536.

   Use Hex Nuts, Hex Jam Nuts, and Washers in accordance with the AASHTO-AGC-ARTBA Guide to Standardized Barrier Hardware with English unit equivalents of components FNX24a and FWC24a, respectively. Two Hex Nuts may be used for the Hex Jam Nut System.
3. PLATE STOP-NAILS: To prevent rotation of the Bearing Plate, drive steel 2½" Type 8d nails with ASTM A153 hot-dip galvanization.
4. CABLE ANCHOR PLATE ASSEMBLY INSTALLATION: Mount to the pre-fabricated Cable Anchor Plate Bolt Holes in the W-Beam Panel, as shown on Sheet 4. These panel holes are only permitted for this Cable Anchor Plate Assembly application.
5. SOIL PLATE BOLT HOLE(S): For Trailing Anchorage installations as shown on Sheet 9, the two bolt holes shown may be substituted with a single bolt hole located at the tube centerline.

END TREATMENT - COMPONENT DETAILS

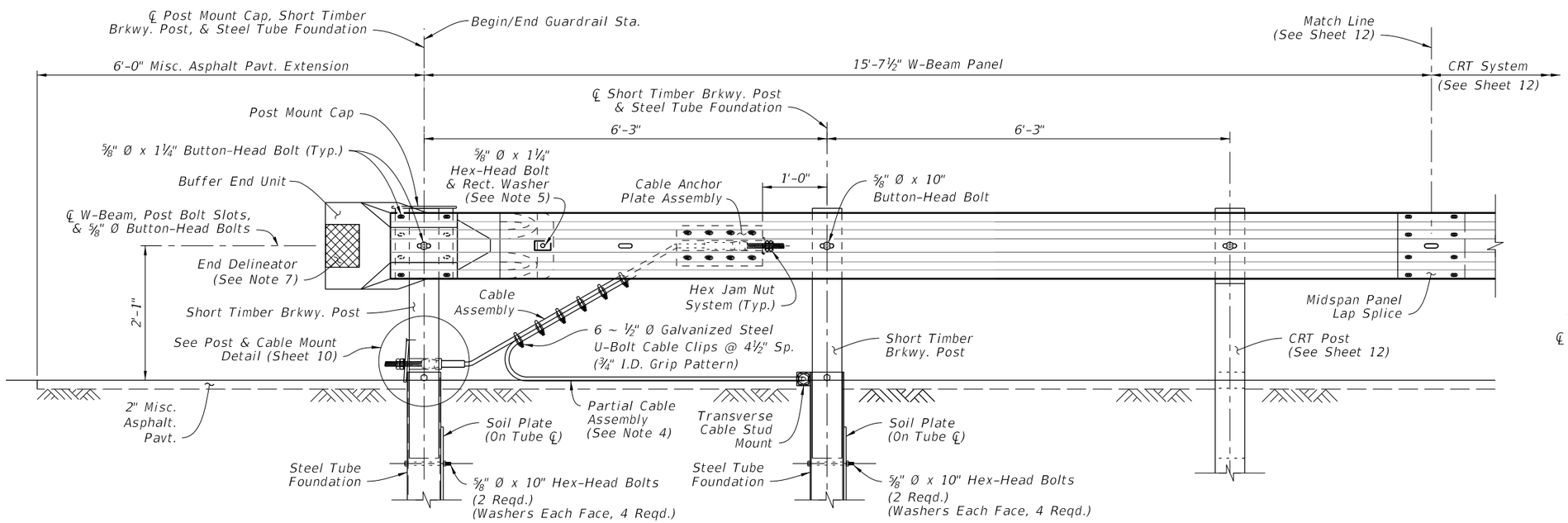

INSTALLED ELEVATION

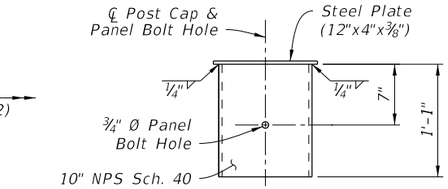

ELEVATION

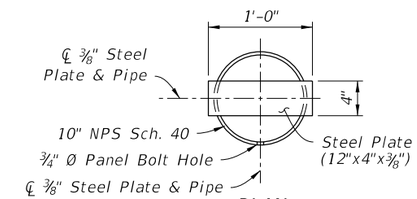

PLAN

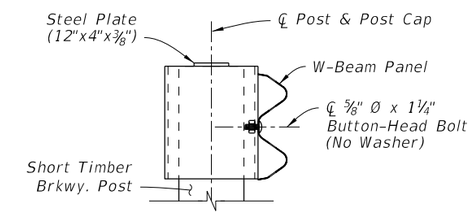

INSTALLED SECTION

POST MOUNT CAP

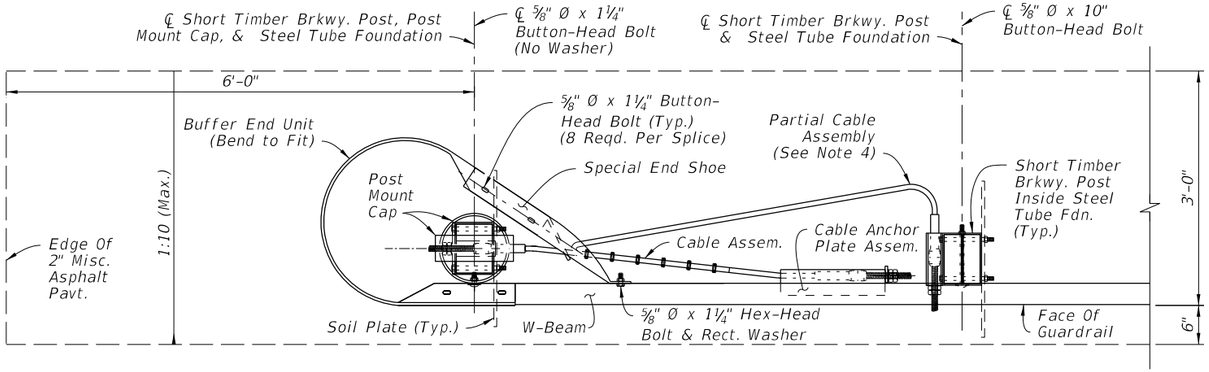

INSTALLED PLAN

CRT END TREATMENT ASSEMBLY

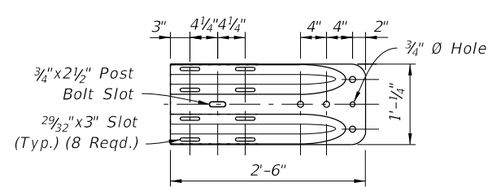

ELEVATION

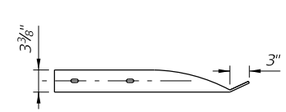

PLAN

SPECIAL END SHOE

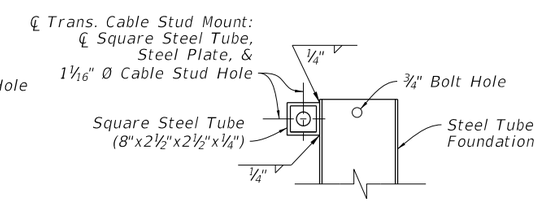

ELEVATION

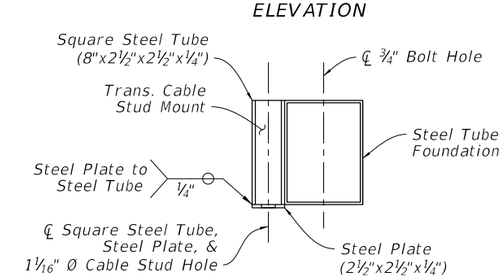

PLAN

TRANSVERSE CABLE STUD MOUNT

NOTES:

1. INSTALLATION: Use with CRT Systems as required on Sheet 12.
2. COMPONENT DETAILS: For additional component details, See Sheet 10 & 12. For the Rectangular Washer detail, see Sheet 22.
3. MATERIALS: Use steel End Shoes, Plates, Tubes, and pipes in accordance with Specifications 967.
4. PARTIAL CABLE ASSEMBLY: The Partial Cable Assembly is similar to the Cable Assembly defined on Sheet 10, except with a 9'-0" total length and the Swage Fitting and Cable Stud omitted from one end.

   Feed the Cable Stud through the Cable Stud Hole of the Transverse Cable Stud Mount as shown, and secure it with the Hex Jam Nut System as defined on Sheet 10.
5. SPECIAL END SHOE MOUNT: Punch a ¾" Ø hole in the W-Beam Panel as needed to secure the Special End Shoe with the ⅝" Ø Hex-Head Bolt. Galvanize hole per Specification 562.
6. FOUNDATIONS: Install Steel Tubes with attached Soil Plates by either of the following methods:

   a. Excavate, backfill, and compact material to provide full passive soil resistance to all surfaces of the tube and soil plate.

   b. Drive the steel tube and soil plate as a single unit using a dummy timber post to prevent damage to the breakaway post.
7. END DELINEATOR: Mount retroreflective sheeting to the approach face of the Buffer End Unit in accordance with Specifications 536 and 967.

END TREATMENT - CONTROLLED RELEASE TERMINAL (CRT) SYSTEM

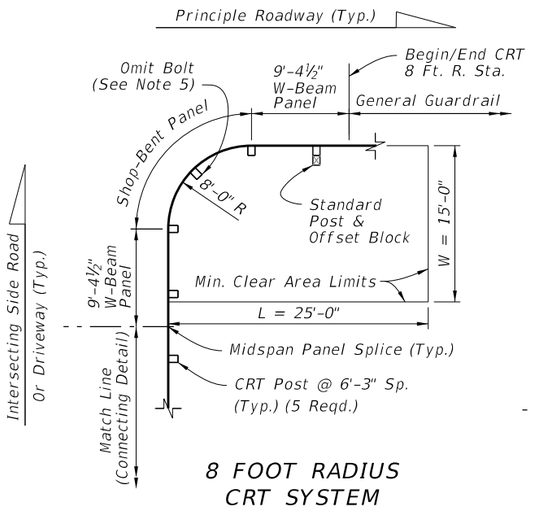

8 FOOT RADIUS CRT SYSTEM PLAN VIEW

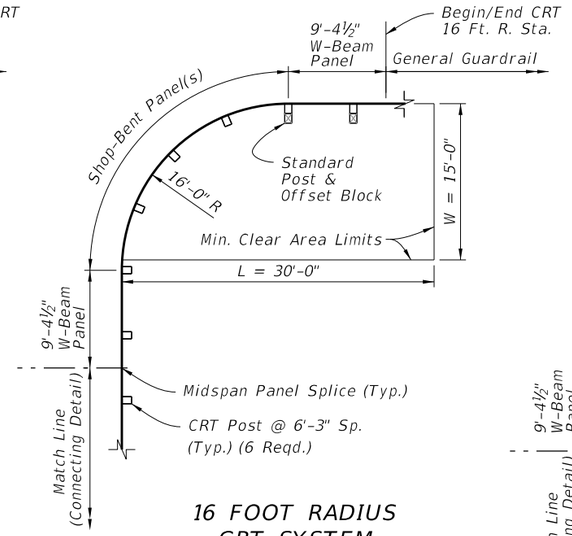

16 FOOT RADIUS CRT SYSTEM PLAN VIEW

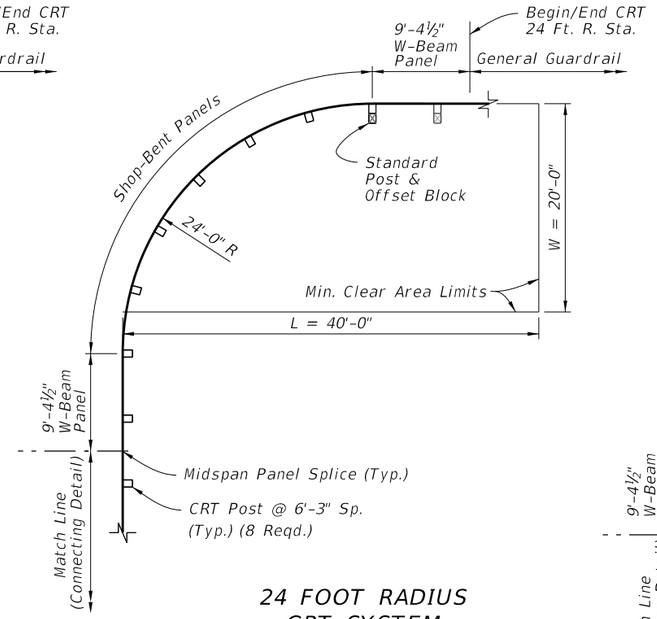

24 FOOT RADIUS CRT SYSTEM PLAN VIEW

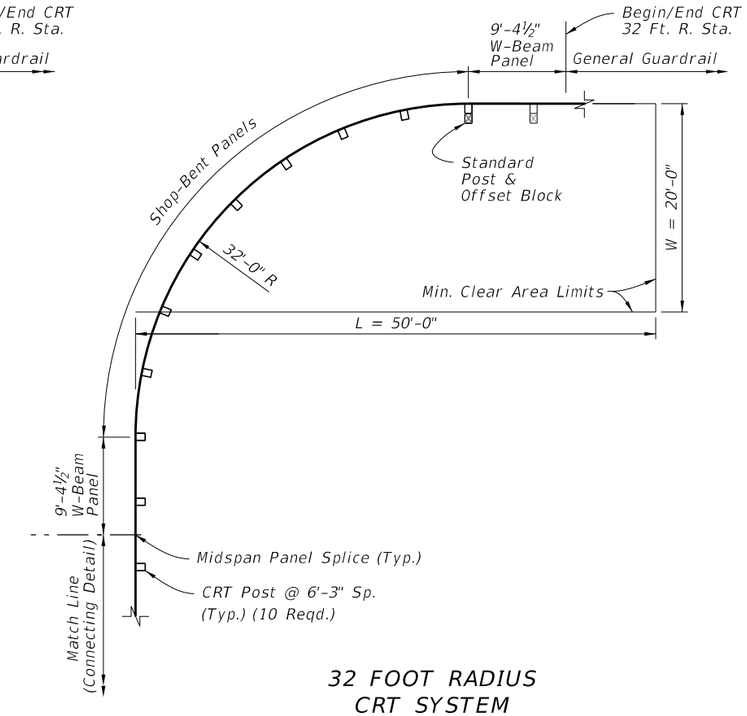

32 FOOT RADIUS CRT SYSTEM PLAN VIEW

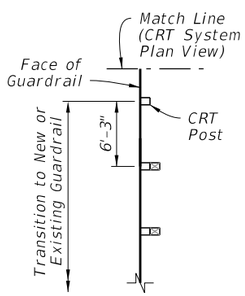

CONTINUING OPTION

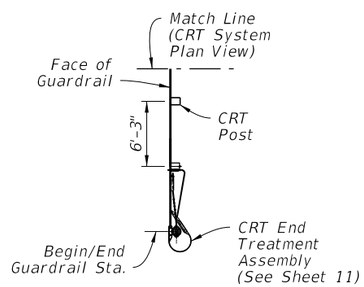

END TREATMENT OPTION

CONNECTING DETAIL

CRT SYSTEM SUMMARY TABLE:

RETURN RADIUS (FT.)	LENGTH OF SHOP-BENT PANEL(S) (FT.)	QUANTITY OF CRT POSTS	AREA CLEAR OF HAZARDS 'L' x 'W' (FT.)
8	12.5	5	25 x 15
16	25.0	6	30 x 15
24	37.5	8	40 x 20
32	50.0	10	50 x 20

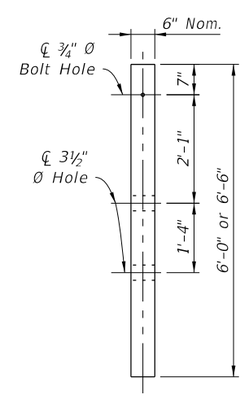

CRT POST ELEVATION (6"x8" Nom. Timber)

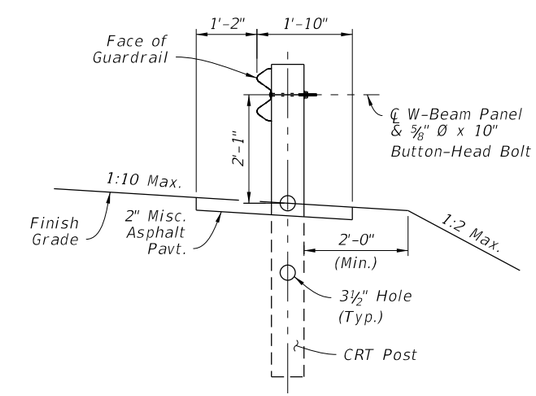

CRT INSTALLED SECTION

NOTES:

1. INSTALLATION: Construct the specified radius layout and Connecting Detail option as shown in the plans.
2. MIN. CLEAR AREA: Keep the area behind the CRT free of fixed objects and aboveground hazards within the Min. Clear Area limits shown. Maintain a slope not steeper than 1:10 for a minimum 2' behind the posts, and maintain a slope not steeper than 1:2 beyond 2' from the posts.
3. APPROACH GRADING: Maintain grading on the roadway side of the guardrail face at a maximum slope of 1:10.
4. MATERIALS: For CRT Posts, use Timber Post material in accordance with Specification 967. Use steel panels and hardware in accordance with Specification 967.
5. BOLT OMISSION: For the 8 Foot Radius CRT System only, do not place a panel-to-post mount bolt at the center CRT Post (omit the ⅝" Button-Head Bolt only at the location shown).
6. SHOP-BENT PANELS: Install Shop-Bent panel(s) where indicated using 12'-0" or 25'-0" W-Beam Panels. Splice at post locations within the CRT radius using the General configuration of ⅝" Ø Button-Head Bolts (8 reqd. per splice).
7. GENERAL GUARDRAIL: General Guardrail typically includes Panels and Post Spacing as shown on Sheet 2, including parallel and tapered segments. Approach Transitions, Low-Speed Guardrail, or Reduced Post Spacing Guardrail segments may be substituted for the General Guardrail shown herein if indicated in the plans.

LAYOUT FOR CONTROLLED RELEASE TERMINAL (CRT) SYSTEMS - SIDE ROADS AND DRIVEWAYS

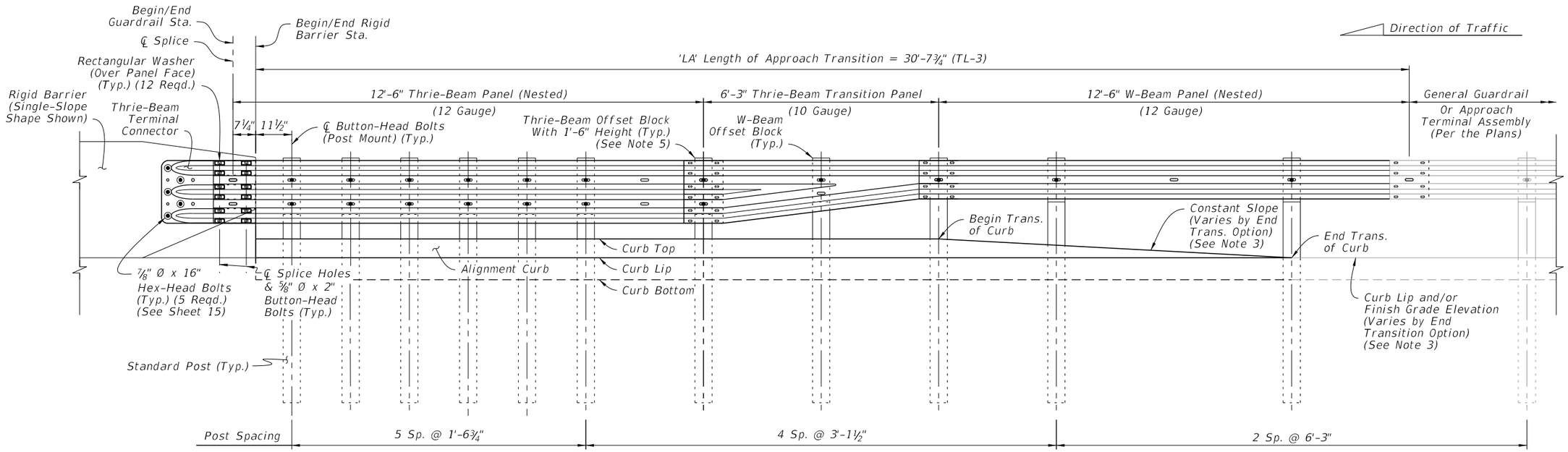

TL-3 APPROACH TRANSITION
INSTALLED ELEVATION

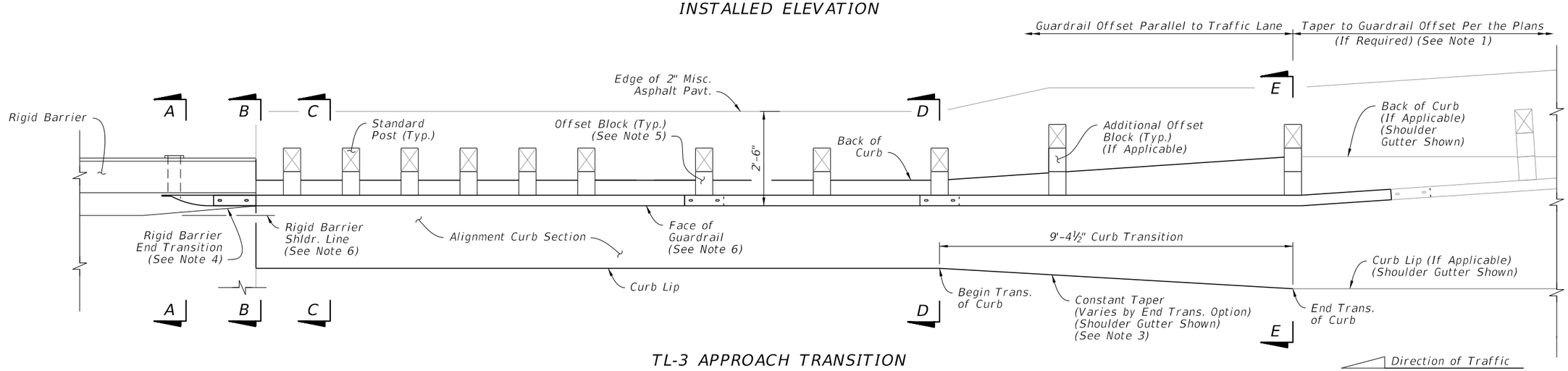

TL-3 APPROACH TRANSITION
INSTALLED PLAN

NOTES:

1. INSTALLATION: Construct the Approach Transition segment where indicated in the plans. The required offset of the connecting adjacent guardrail is shown in the plans.

   The Layouts given on Sheet 17 provide basic schemes for connections to adjacent guardrail, where a taper to a differing guardrail offset may be required. If the adjacent guardrail segment has the same offset as the Approach Transition segment, then no taper is required.

   For existing bridge connection options, see Indexes 536-002, 521-404, and 521-405.

2. SECTION VIEWS & DETAILS: For cross sections and details including the barrier mounting hardware, curb transition, adjacent grading, and installation dimensions, see Sheet 15.

3. END TRANSITION OF CURB OPTION: The Plan and Elevation views depict an example Curb Transition to Shoulder Gutter from Section D-D to E-E, but this transition may require a different shape depending on the End Transition option indicated in the plans (Either a 'Shoulder Gutter Option', 'Raised Curb Option', or 'Flat No Curb Option'). See Sheet 15 for curb shape details.

4. RIGID BARRIER END TRANSITION: Taper the Rigid Barrier toe as shown. See Concrete Barrier, Index 521-001, and Traffic Railing, Indexes 521-422 and 521-428, for details.

5. OFFSET BLOCKS: For Thrie-Beam post locations within the Length of Approach Transition segment, use the Timber Offset Blocks with 1'-6" height shown on Sheet 5.

   For the midspan of the Thrie-Beam Transition Panel and for all other W-Beam locations shown herein, use the W-Beam Offset Blocks with 1'-2" height.

6. OFFSET: The required offset difference between the Face of Guardrail and Rigid Barrier Shoulder Line is considered negligible and may not be shown in the guardrail offset callouts in the plans. A consistent guardrail offset deviation of up to 4 inches outside of the Rigid Barrier Shoulder Line is permitted over the length 'LA'.

7. GENERAL GUARDRAIL: General Guardrail typically includes Panels and Post Spacing as shown on Sheet 2, including parallel and tapered segments. Approach Terminals, Low-Speed Guardrail, or Reduced Post Spacing Guardrail segments may be substituted for the General Guardrail shown herein if indicated in the plans.

APPROACH TRANSITION CONNECTION TO RIGID BARRIER - GENERAL, TL-3

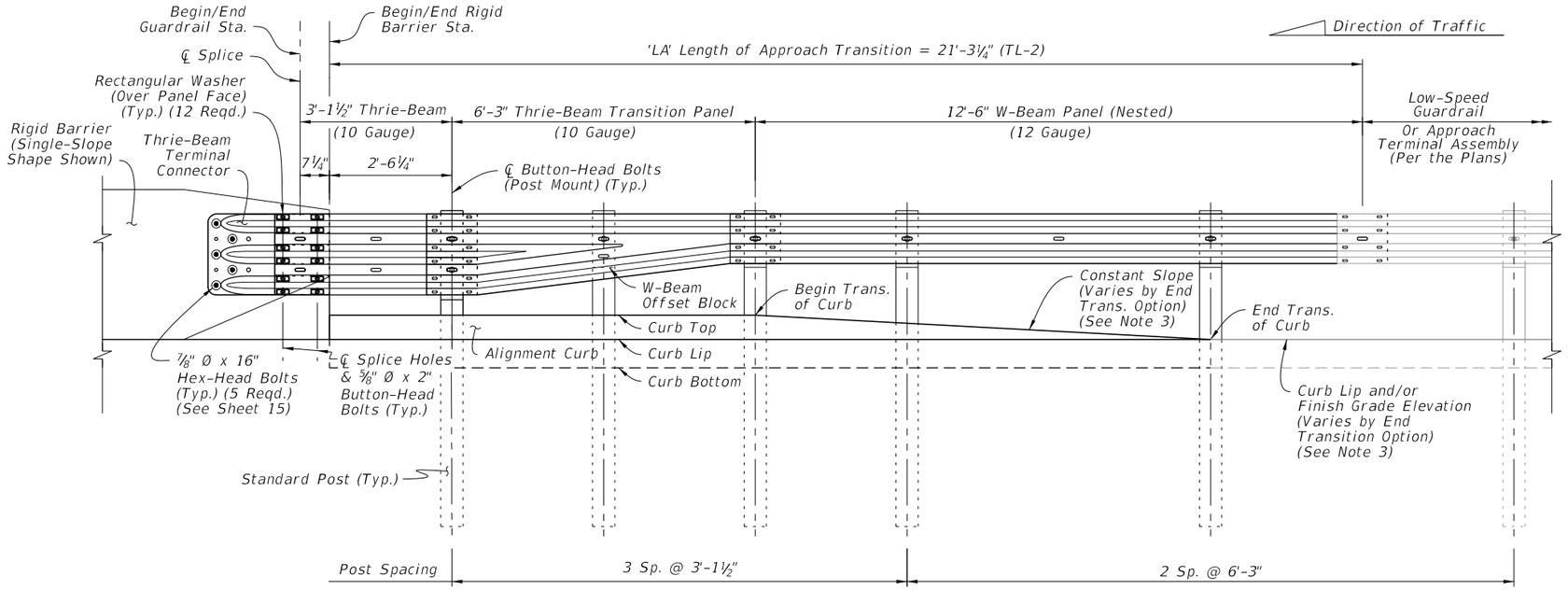

TL-2 APPROACH TRANSITION
INSTALLED ELEVATION

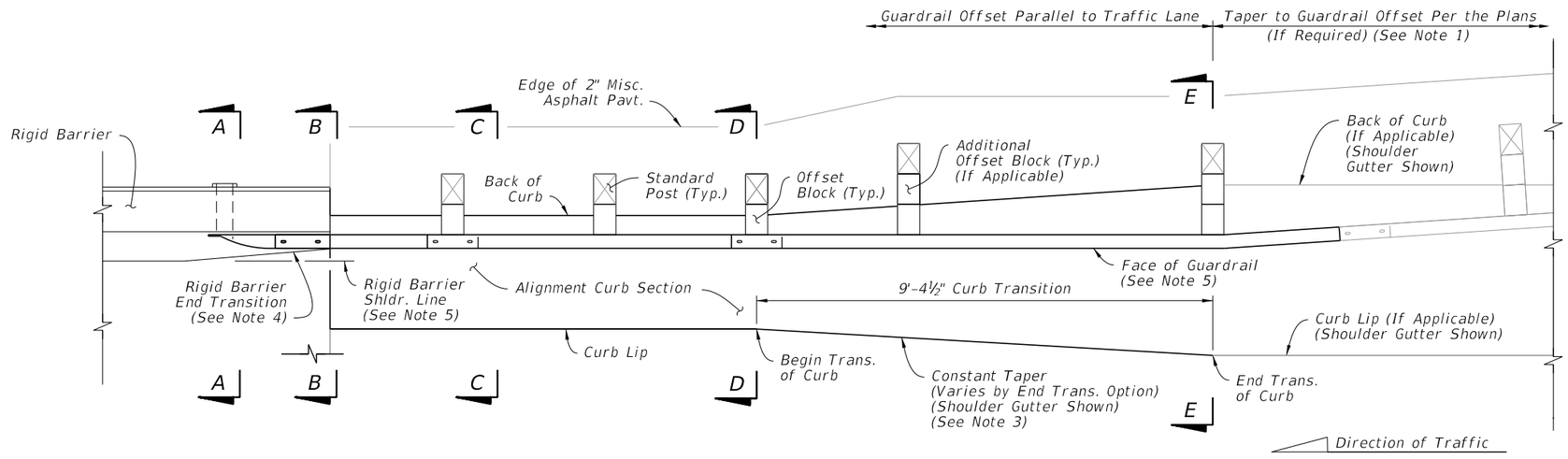

TL-2 APPROACH TRANSITION
INSTALLED PLAN

NOTES:

1. INSTALLATION: Construct the Approach Transition segment where indicated in the plans. The required offset of the connecting adjacent guardrail is shown in the plans.

   The Layouts given on Sheet 17 provide basic schemes for connections to adjacent guardrail, where a taper to a differing guardrail offset may be required. If the adjacent guardrail segment has the same offset as the Approach Transition segment, then no taper is required.

   For existing bridge connection options, see Indexes 536-002, 521-404, and 521-405.

2. SECTION VIEWS & DETAILS: For cross sections and details including the barrier mounting hardware, curb transition, adjacent grading, and installation dimensions, see Sheet 15.

3. END TRANSITION OF CURB OPTION: The Plan and Elevation views depict an example Curb Transition to Shoulder Gutter from Section D-D to E-E, but this transition may require a different shape depending on the End Transition option indicated in the plans (Either a 'Shoulder Gutter Option', 'Raised Curb Option', or 'Flat No Curb Option'). See Sheet 15 for curb shape details.

4. RIGID BARRIER END TRANSITION: Taper the Rigid Barrier toe as shown. See Concrete Barrier, Index 521-001, and Traffic Railing, Indexes 521-422 thru 521-428, for details.

5. OFFSET: The required offset difference between the Face of Guardrail and Rigid Barrier Shoulder Line is considered negligible and may not be shown in the guardrail offset callouts in the plans. A consistent guardrail offset deviation of up to 4 inches outside of the Rigid Barrier Shoulder Line is permitted over the length 'LA'.

6. LOW-SPEED GUARDRAIL: Low-Speed Guardrail typically includes Panels and Post Spacing as shown on Sheet 3, including parallel and tapered segments. Approach Terminals, General Guardrail, or Reduced Post Spacing Guardrail segments may be substituted for the Low-Speed Guardrail shown herein if indicated in the plans.

APPROACH TRANSITION CONNECTION TO RIGID BARRIER - LOW-SPEED, TL-2

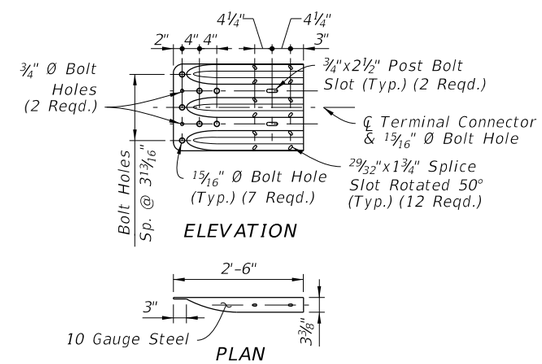

THRIE-BEAM TERMINAL CONNECTOR DETAIL

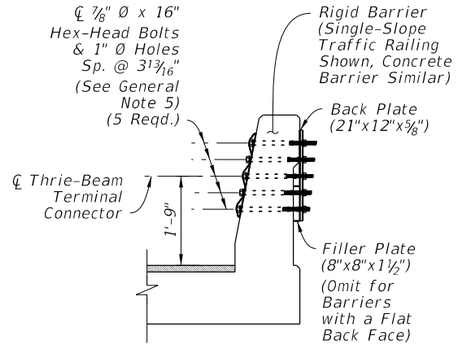

SECTION A-A
RIGID BARRIER TERMINAL CONNECTOR MOUNT

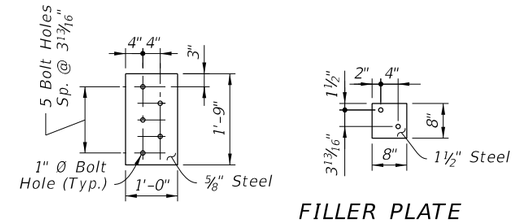

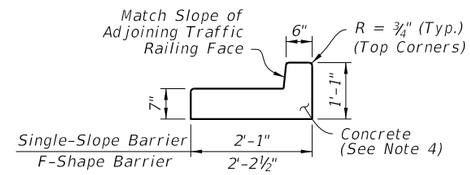

ALIGNMENT CURB SECTION

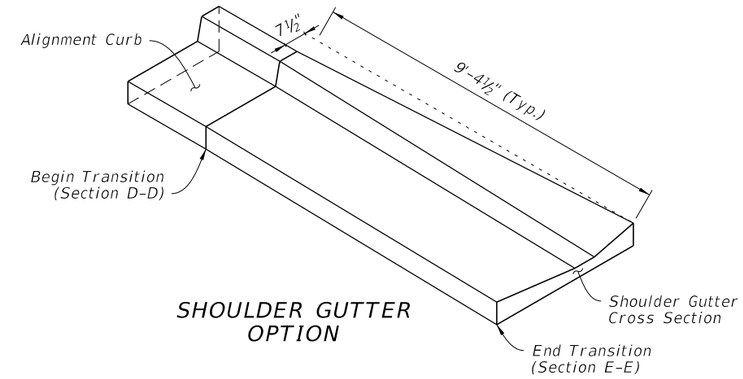

SHOULDER GUTTER OPTION

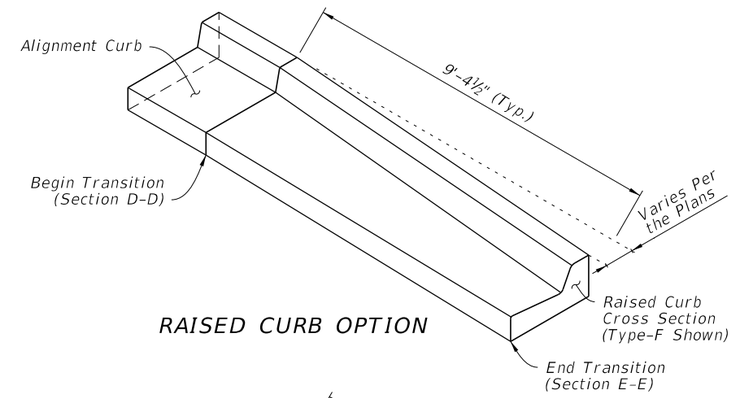

RAISED CURB OPTION

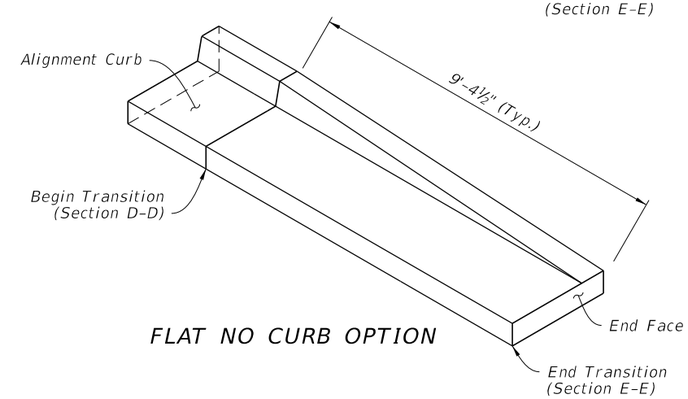

FLAT NO CURB OPTION

CURB TRANSITION ISOMETRIC VIEWS

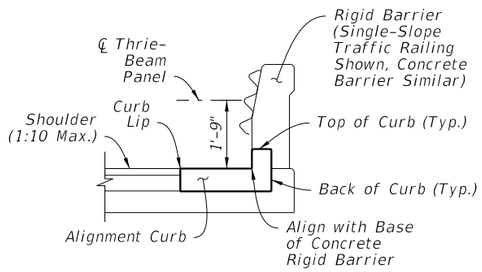

SECTION B-B
BEGIN ALIGNMENT CURB
(Mate to Rigid Barrier)

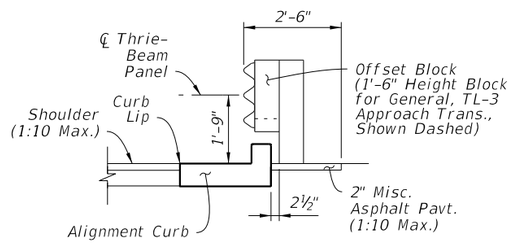

SECTION C-C
ALIGNMENT CURB
(Intermediate)

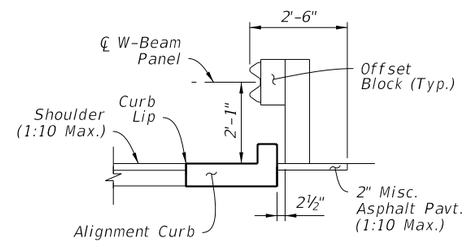

SECTION D-D
BEGIN TRANSITION
(End Alignment Curb)

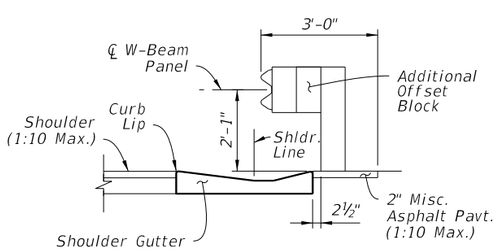

SECTION E-E
END TRANSITION
SHOULDER GUTTER OPTION

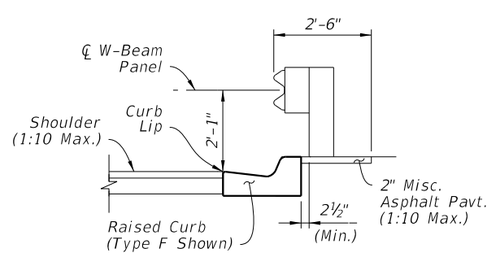

SECTION E-E
END TRANSITION
RAISED CURB OPTION

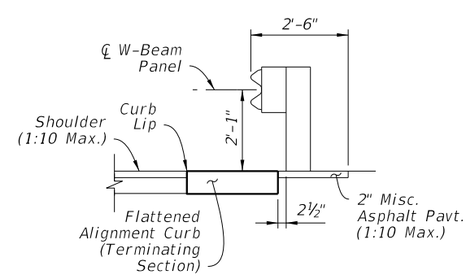

SECTION E-E
END TRANSITION
FLAT NO CURB OPTION

CURB TYPICAL SECTIONS

NOTES:

1. PLAN AND ELEVATION VIEWS: Work with Sheets 13 & 14.
2. END TRANSITION OF CURB OPTION: Install one of the three End Transition types shown per Section E-E as indicated by the plans.
3. GRADING BEHIND POSTS: Place Slope Break a Min. 2'-0" behind the post, per Sheet 6.
4. MATERIALS & CONSTRUCTION: Construct the concrete Aligning Curb and Curb transition in accordance with Specification 520. Use steel Plates and Thrie-Beam Terminal Connectors in accordance with Specification 967.

APPROACH TRANSITION CONNECTION - DETAILS

12/6/2018 1:09:23 PM

LAST REVISION	REVISION	DESCRIPTION:			INDEX	SHEET
11/01/17			FY 2019-20 STANDARD PLANS	GUARDRAIL	536-001	15 of 22

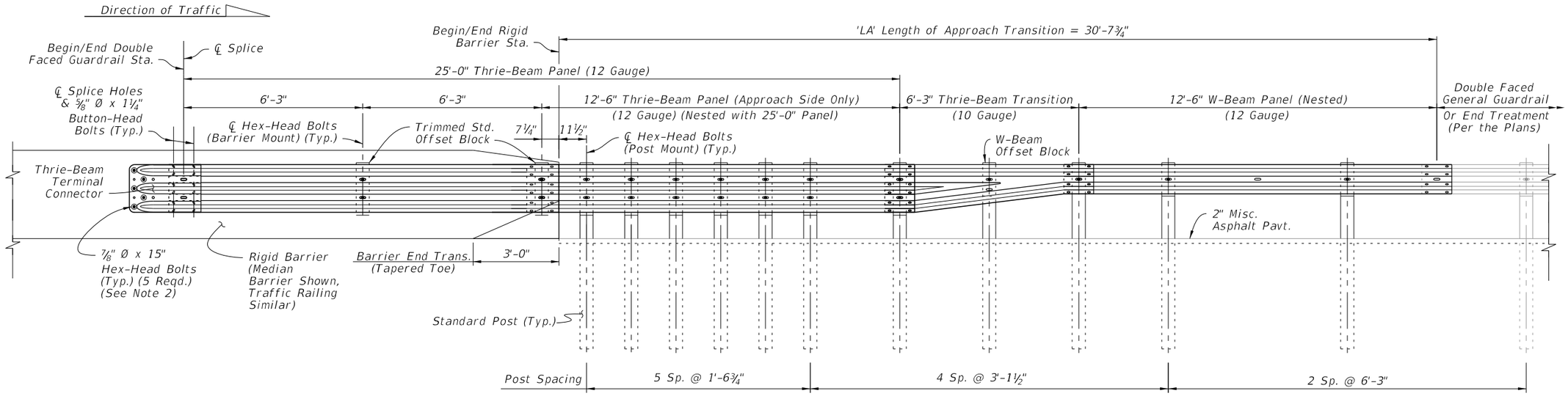

TL-3 DOUBLE FACED APPROACH TRANSITION INSTALLED ELEVATION

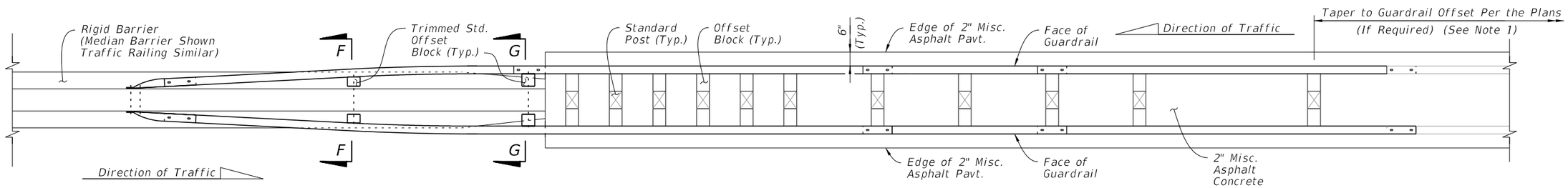

TL-3 DOUBLE FACED APPROACH TRANSITION INSTALLED PLAN

NOTES:

1. INSTALLATION: Construct the Approach Transition segment where indicated in the plans. The required offset of the connecting adjacent guardrail is shown in the plans.

   The Layouts given on Sheet 18 provide basic schemes for connections to adjacent guardrail, where a taper to a differing guardrail offset may be required. If the adjacent guardrail has the same offset as the Approach Transition segment, then no taper is required.

2. THRIE-BEAM TERMINAL CONNECTOR: See Sheet 15 for Details. The installed bolt's threaded portion is not permitted to extend beyond ¾" from the face of the nut; trim the threaded portion as needed and galvanize in accordance with Specification 562.

3. GENERAL GUARDRAIL: General Guardrail typically includes Panels and Post Spacing as shown on Sheet 2, including parallel and tapered segments. End Treatments or Reduced Post Spacing Guardrail segments may be substituted for the General Guardrail shown herein if indicated in the plans.

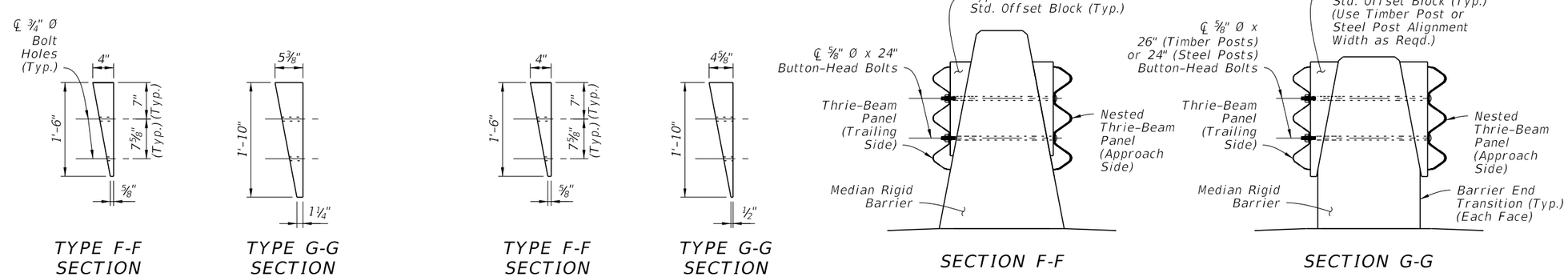

TYPE F-F SECTION | TYPE G-G SECTION | TYPE F-F SECTION | TYPE G-G SECTION | SECTION F-F | SECTION G-G

TRIMMED STD. OFFSET BLOCKS TIMBER POST ALIGNMENT WIDTH

TRIMMED STD. OFFSET BLOCKS STEEL POST ALIGNMENT WIDTH

APPROACH TRANSITION CONNECTION TO RIGID BARRIER WITH DOUBLE FACED GUARDRAIL

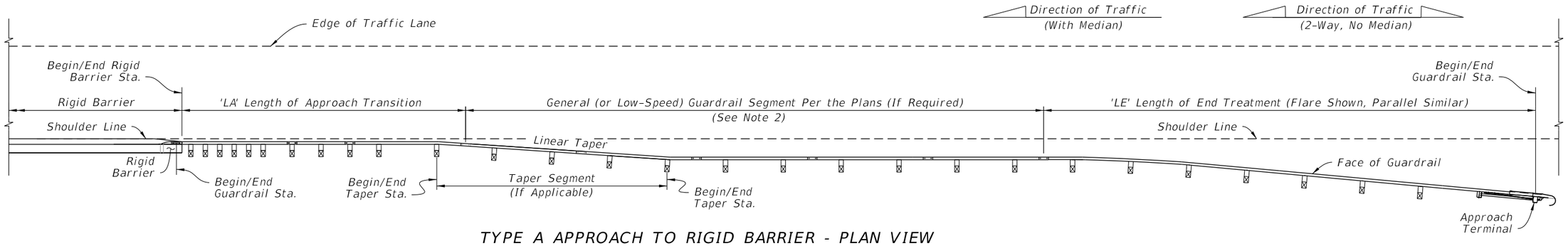

TYPE A APPROACH TO RIGID BARRIER - PLAN VIEW
MEDIAN OR OUTSIDE SHOULDERS
(Mirror Horiz. and/or Vert. for Opposite
Direction and/or Side of Road)

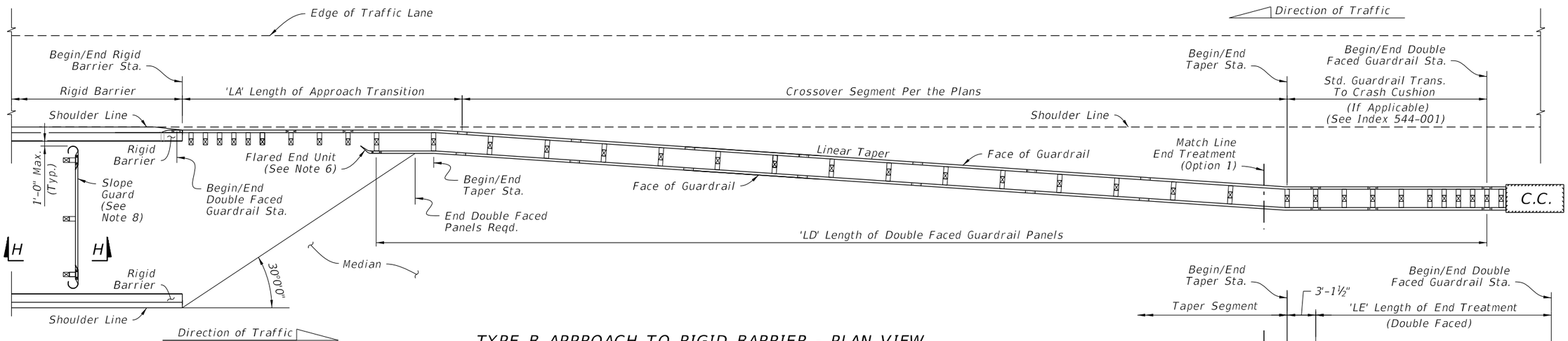

TYPE B APPROACH TO RIGID BARRIER - PLAN VIEW
CROSSOVER GUARDRAIL FOR MEDIAN SHOULDERS ONLY
DUAL BRIDGE APPROACH CONFIGURATION
(Mirror Horiz. and Vert. for Opposite Direction)

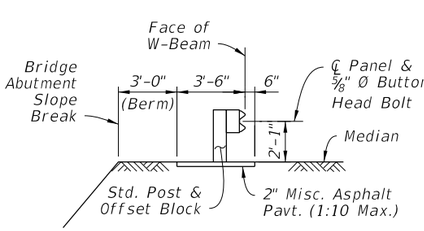

SECTION H-H
BRIDGE ABUTMENT
SLOPE GUARD
(Between Bridges)

NOTES:

1. INSTALLATION: The Plan Views shown are schematic only, showing example geometry for connecting guardrail segments including taper locations and Double Faced Guardrail requirements as applicable. Work this Sheet with the plans, where stationing and offsets for Begin/End Guardrail, Begin/End Rigid Barrier, and Begin/End Taper are specified. For existing bridge layouts, see Index 536-002, 521-404, and 521-405.

2. GENERAL (OR LOW-SPEED) GUARDRAIL SEGMENT: Construct this segment if shown in the plans. For the case where this segment's offset differs from the Approach Transition offset, linearly taper the guardrail between the Begin/End Taper Stations and offsets as specified in the plans.

   For the shortest length case of a direct connection between the End Treatment and the Approach Transition, this segment may be omitted as shown in the plans.

3. LENGTH OF APPROACH TRANSITION 'LA': Install the Approach Transition as shown per Sheet 13 or 14 as called for in the plans.

4. LENGTH OF END TREATMENT 'LE': Install the Approach Terminal End Treatment as shown per Sheet 7 or 8, where called for in the plans. Use the corresponding APL drawings for construction details.

5. CROSSOVER GUARDRAIL (FOR TYPE B APPROACH): Install the Crossover Segment tapering linearly from the Begin Taper Sta. and offset to the End Taper Sta. and offset as specified in the plans.

6. LENGTH OF DOUBLE FACED GUARDRAIL PANELS, 'LD' (FOR TYPE B APPROACH): Terminate the Double Faced Guardrail panels as shown (based upon the 30° line measured from the hazard on the opposite side of the median). Extend the panel segment longer than the dimension 'LD' as needed for the Panel's end Bolt Slot to align with a post Bolt hole.

   Install a Flared End Unit where shown, as defined on Sheet 9.

7. END TREATMENT OPTIONS (FOR TYPE B & C APPROACH): For Double Faced applications, use either a Double Faced Approach Terminal Assembly per Sheet 8 or a Crash Cushion per Index 544-001. For either Option, meet the 1:10 adjacent grading requirements for Approach Terminals as shown on Sheet 8.

8. SLOPE GUARD: Where indicated in the plans, install a Guardrail segment between bridge approaches and offset from the bridge abutment's Slope Break as shown. Install posts at the end bolt slots of the panel system. Use post spacing of either 3'-1½" or 6'-3", as needed to correctly fit system between barriers. The system may also be lengthened to fit by installing two Rounded End Units as defined on Sheet 9.

LAYOUT TO RIGID BARRIER -
APPROACH ENDS

10/25/2018 9:03:15 AM

LAST REVISION	REVISION	DESCRIPTION:	FY 2019-20 STANDARD PLANS	GUARDRAIL	INDEX	SHEET
11/01/18					536-001	17 of 22

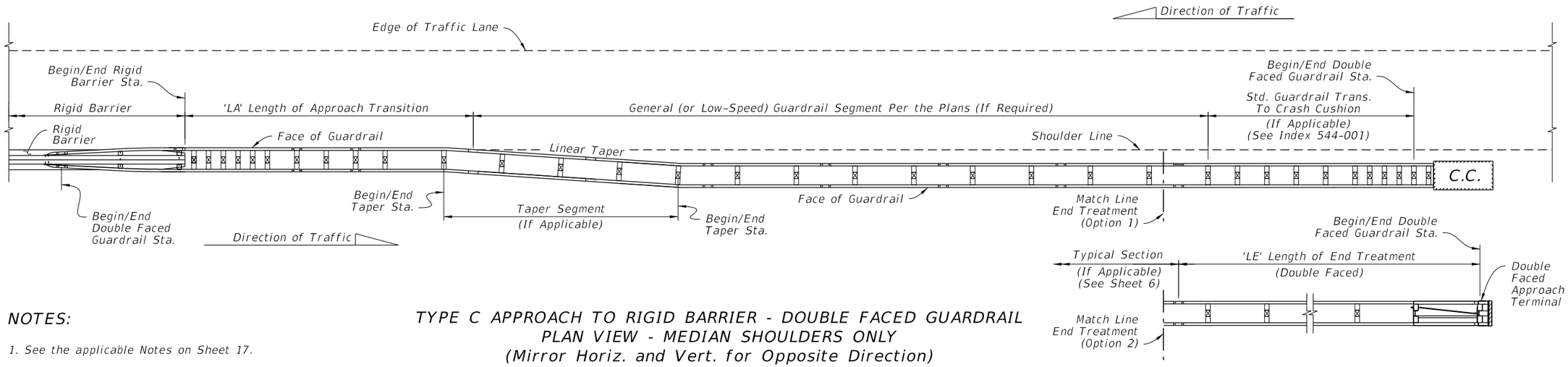

NOTES:

1. See the applicable Notes on Sheet 17.

TYPE C APPROACH TO RIGID BARRIER - DOUBLE FACED GUARDRAIL
PLAN VIEW - MEDIAN SHOULDERS ONLY
(Mirror Horiz. and Vert. for Opposite Direction)

LAYOUT TO RIGID BARRIER - APPROACH ENDS WITH DOUBLE FACED GUARDRAIL

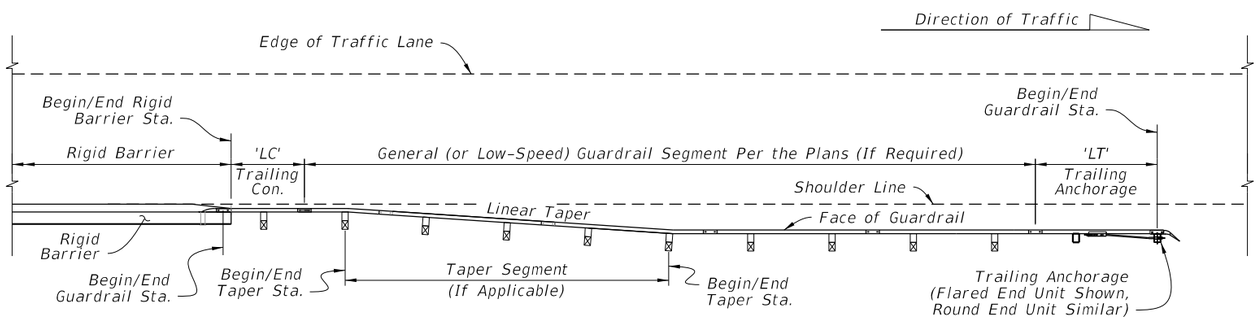

TYPE D TRAILING CONNECTION FROM RIGID BARRIER
PLAN VIEW - MEDIAN OR OUTSIDE SHOULDER
(Mirror Horiz. and/or Vert. for Opposite Direction and/or Side of Road)

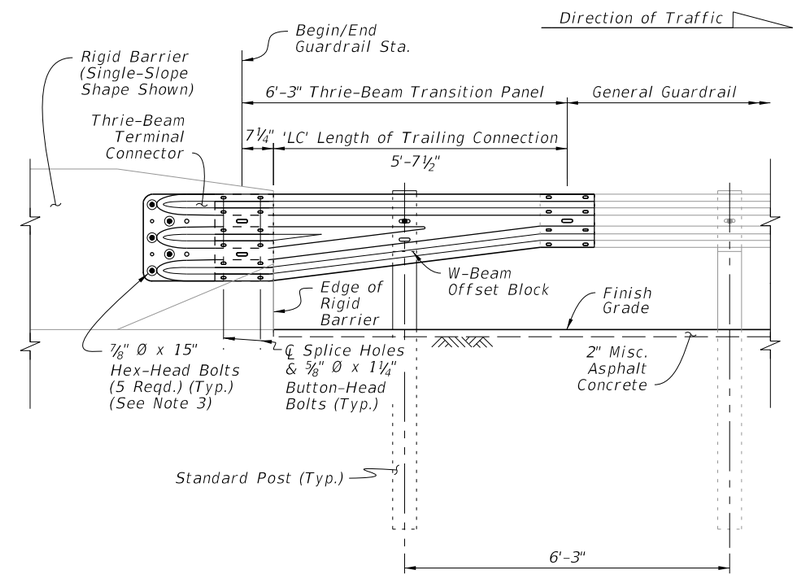

TRAILING END TRANSITION CONNECTION
TO RIGID BARRIER - INSTALLED ELEVATION

NOTES:

1. See the applicable Notes on Sheet 17.
2. LENGTH OF TRAILING ANCHORAGE, 'LT': Install the Trailing Anchorage as shown on Sheet 9, where called for in the plans.
3. THRIE-BEAM TERMINAL CONNECTOR: Install connector and bolts as shown on Sheet 15.
4. RIGID BARRIER SINGLE SLOPE END FACE: See Concrete Barrier Wall, Index 521-001, and Traffic Railing, Indexes 521-422 and 521-423, for details.

LAYOUT TO RIGID BARRIER - TRAILING ENDS

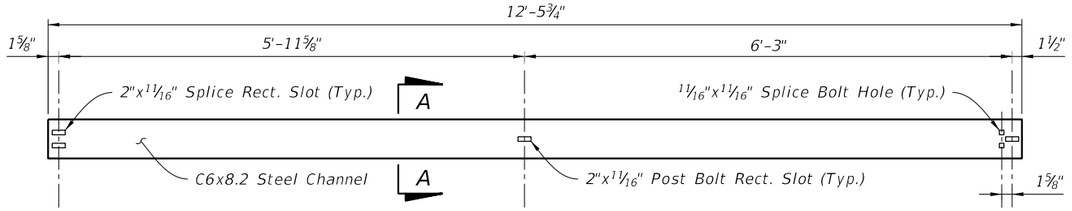

PANEL ELEVATION

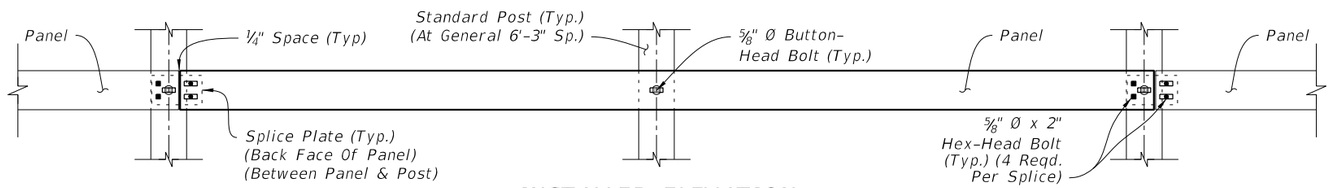

INSTALLED ELEVATION

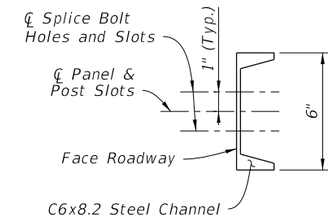

SECTION A-A
(Panel Typical)

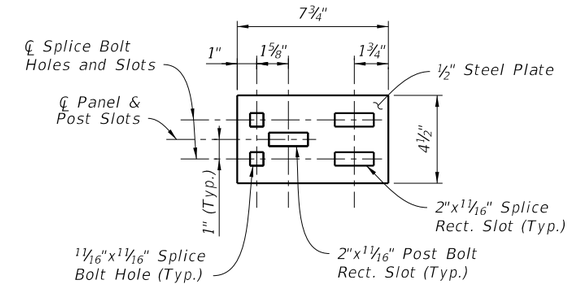

SPLICE PLATE
ELEVATION

CHANNEL SECTION RUB RAIL

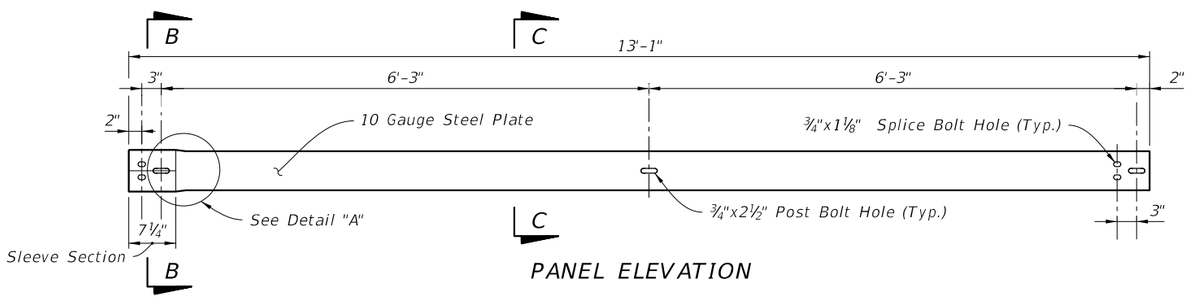

PANEL ELEVATION

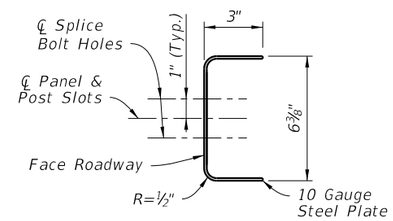

SECTION B-B
(Panel Sleeve End)

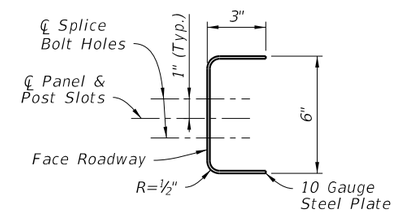

SECTION C-C
(Panel Typical)

PANEL PLAN

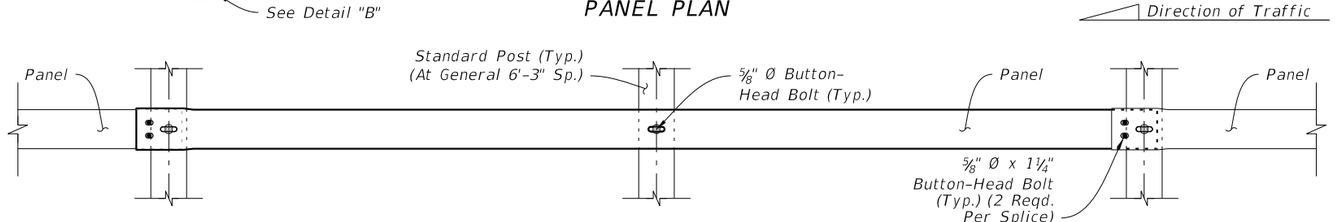

INSTALLED ELEVATION

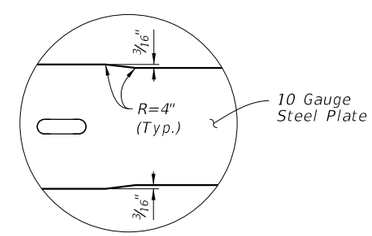

DETAIL "A"
(Sleeve Transition Elevation)

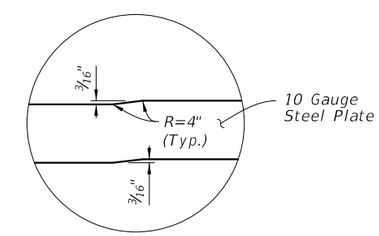

DETAIL "B"
(Sleeve Transition Plan)

BENT-PLATE PANEL RUB RAIL

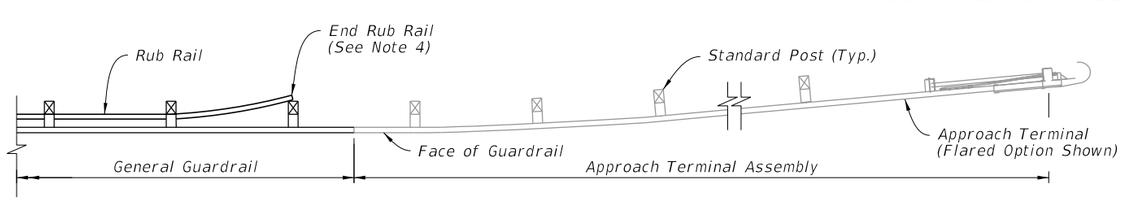

RUB RAIL TERMINATION - SCHEMATIC PLAN VIEW

Direction of Traffic

NOTES:

1. GENERAL: Install Rub Rail where called for in the plans. Position as shown on Sheet 6 unless otherwise shown in the plans. Install the backs of Rub Rail panels flush against Standard Posts. Either of the Channel Section or Bent-Plate Panel Rub Rail options may be used (consistent type per project). Where Double Sided Rub Rail is called for, thread the Button-Head Bolt through the Post Bolt Hole(s) and the panels on either side, and tighten the nut against the face of the panel farthest from adjacent traffic lanes. Trim the bolt's threaded portion in accordance with Note 4 on Sheet 5.

2. MOUNTING HEIGHT: Mount to the Standard Post's Rub Rail Bolt Hole as defined on Sheet 5.

3. MATERIALS: Use steel components in accordance with Specification 967.

4. END RUB RAIL: For Single Sided Rub Rail, terminate the run of Rub Rail by bending the panel behind the post and securing in place (as shown). For Double Sided Rub Rail, terminate the runs of Rub Rail on their respective front face of the post and secure with the typical Button-Head bolt.

RUB RAIL DETAILS

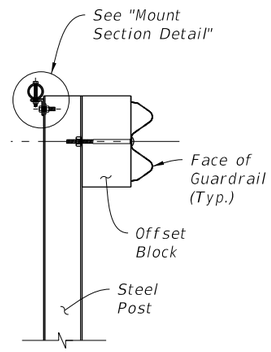

GENERAL PIPE RAIL SECTION

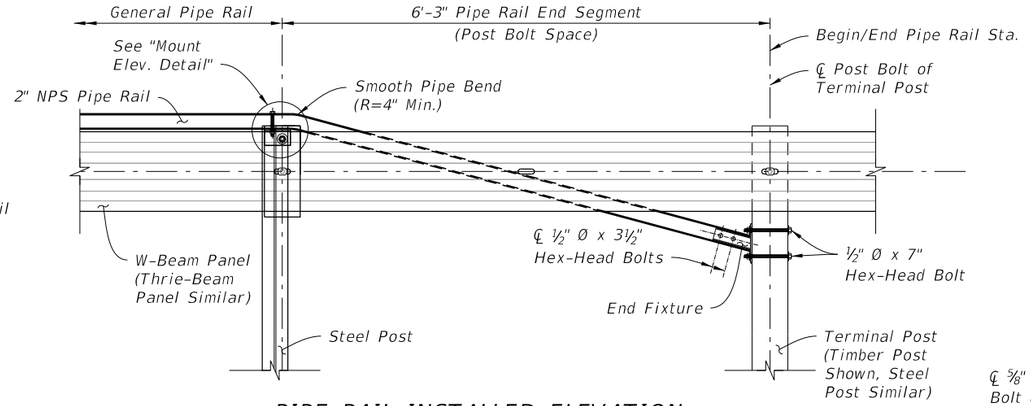

PIPE RAIL INSTALLED ELEVATION
(End Segment Shown)

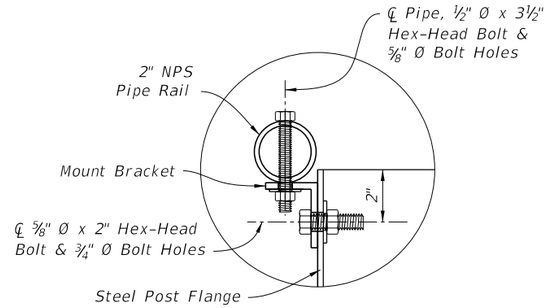

MOUNT SECTION DETAIL

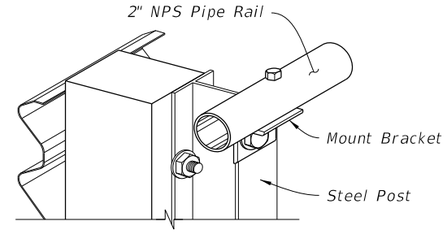

MOUNT ISOMETRIC
CUT-AWAY

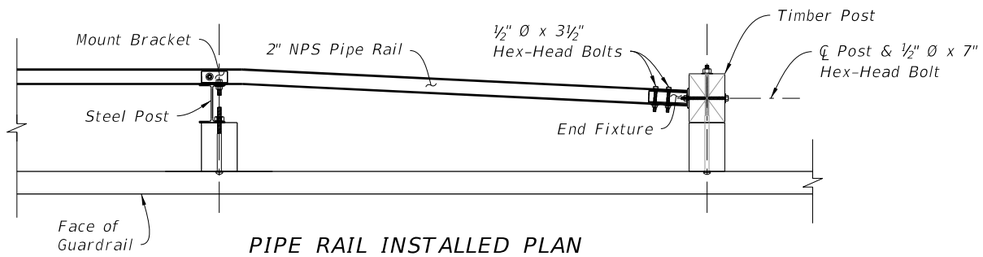

PIPE RAIL INSTALLED PLAN
END AT TIMBER POST OPTION

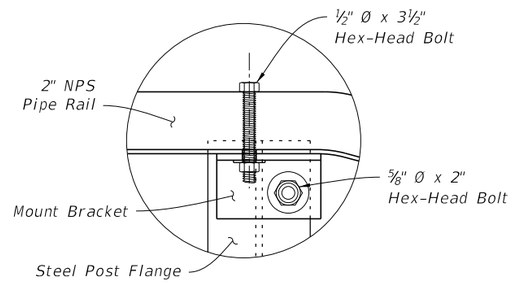

MOUNT ELEVATION DETAIL
(Back View - Mirrored)

NOTES:

1. GENERAL: Install General Pipe Rail where indicated in the plans or when existing sidewalks or shared use paths are located less than 4'-0" from the back of Steel Posts as shown on Sheet 6.
2. PIPE RAIL END SEGMENTS: Place End Segments on both ends of General Pipe Rail runs, with End Fixtures mounted to Terminal Posts located outside of Approach Terminal Assembly ('LE'), Trailing Anchorage Assembly ('LT'), and Approach Transition ('LA') segments.
3. MATERIALS: Use steel brackets, fixtures, and pipes in accordance with Specification 967.
4. RAIL SPLICES: Install Rail Splices to join pieces of 2" NPS Pipe Rail into a continuous system. Place splices as needed, at a spacing of 18'-0" or greater. Orient the head of bolt on the top of the pipe.

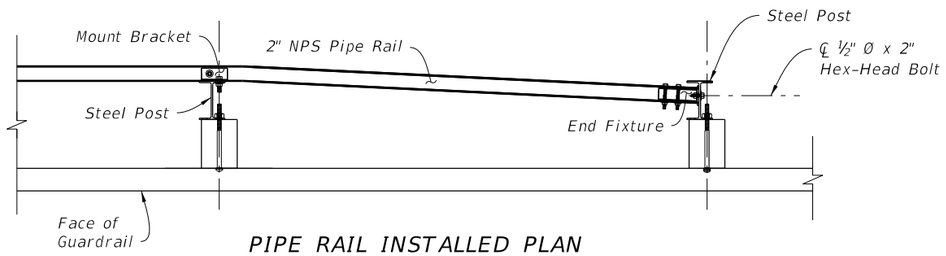

PIPE RAIL INSTALLED PLAN
END AT STEEL POST OPTION

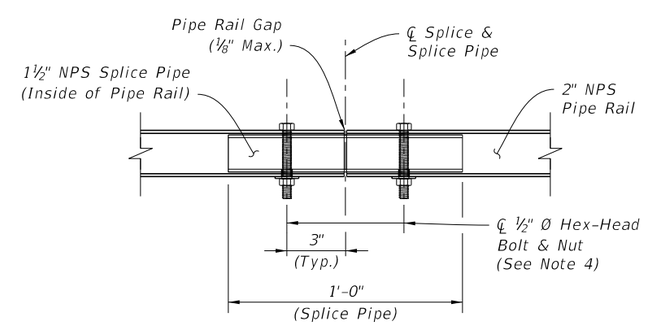

RAIL SPLICE DETAIL

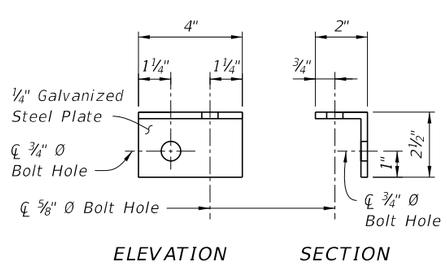

MOUNT BRACKET DETAIL

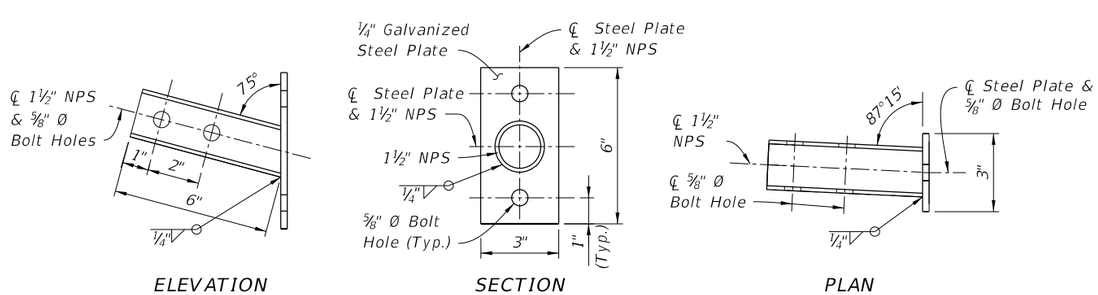

END FIXTURE DETAIL

PEDESTRIAN SAFETY TREATMENT - PIPE RAIL

10/25/2018 9:03:17 AM

LAST REVISION	REVISION	DESCRIPTION:			INDEX	SHEET
11/01/17			FDOT FY 2019-20 STANDARD PLANS	GUARDRAIL	536-001	20 of 22

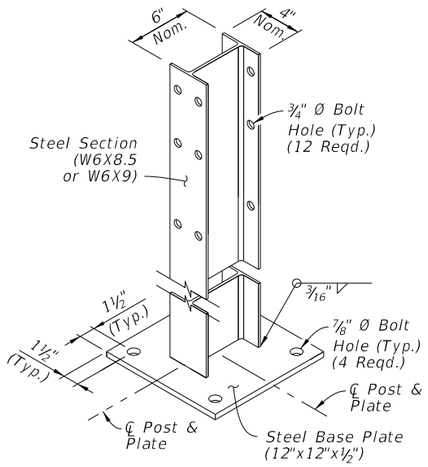

ISOMETRIC VIEW

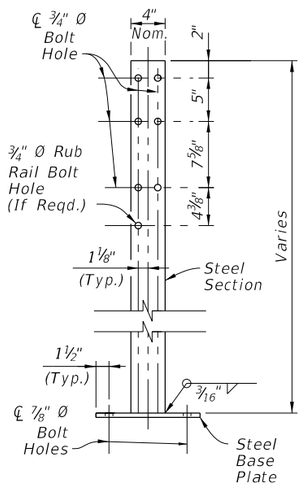

ELEVATION

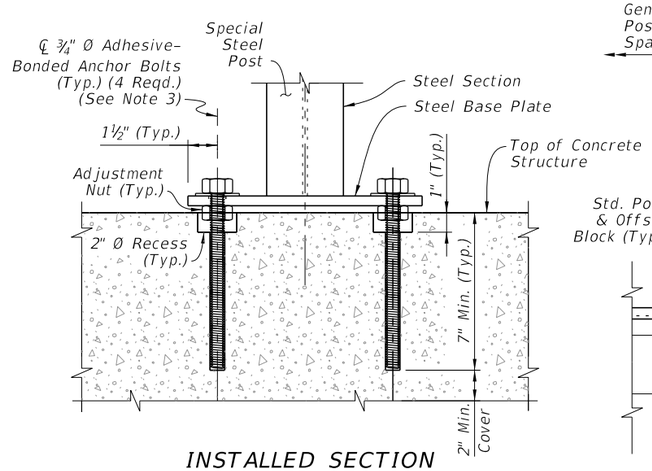

INSTALLED SECTION
(Option 2, Special Post)

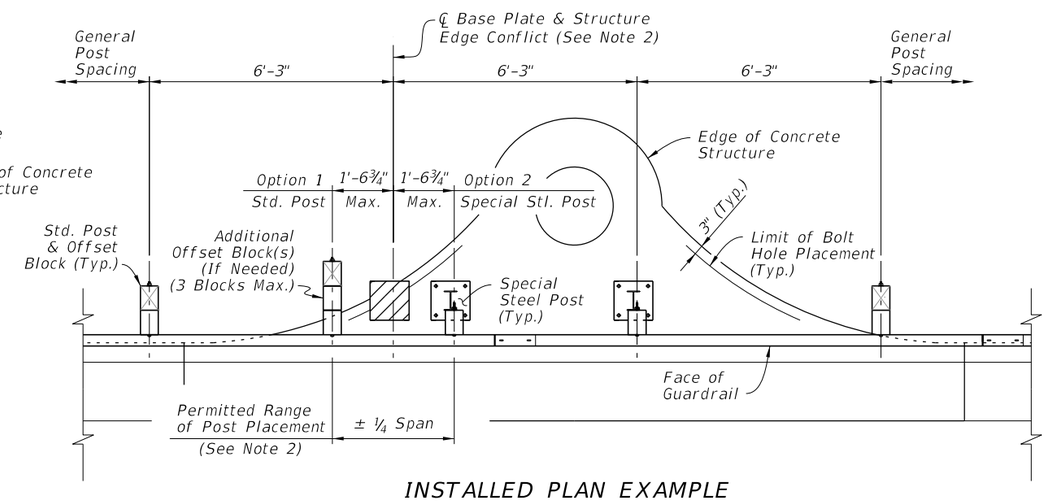

INSTALLED PLAN EXAMPLE
(Curb Inlet Top Type 2 Shown)

SPECIAL STEEL POST

STRUCTURE MOUNTING

NOTES:

1. INSTALLATION: When the construction of Guardrail at the required post spacing results in post(s) located atop culverts, inlets, pier footings, or similar concrete structures, a Special Steel Post may be substituted for a Standard Post. Install where shown in the plans and/or as-needed, in accordance with Specification 536.

2. EDGE CONFLICT: When a required post location causes an Edge Conflict with the structure, where the Steel Base Plate is not located entirely on the structure at least 3" from the Edge of Concrete, the longitudinal post location may be altered by up to 1'-6¾" (Quarter Span) from the original required spacing location to prevent the Edge Conflict. With the post location adjusted, use a Std. Post mounted in soil (Option 1) or a Special Steel Post with its Base Plate mounted entirely on the structure (Option 2). Maintain the original required spacing locations upstream and downstream of the structure.

3. BASE PLATE MOUNT: Install Special Steel Posts as shown using steel Adhesive-Bonded Anchor Bolts in accordance with Specifications 536. Use ¾" Hex-Head Bolts for structures less than 9" deep as defined in the Specification.

4. PANEL MOUNT TO ADJUSTED POST: Punch additional ¾"x2½" Post Bolt Slot(s) in the W-Beam or Thrie-Beam Panel only where needed to mount the panel to a post in an adjusted location. Meet the Panel Post Bolt Slots requirements of Specification 536.

5. MATERIALS: Use steel base plates in accordance with Specification 536.

SPECIAL STEEL POST FOR CONCRETE STRUCTURE MOUNT

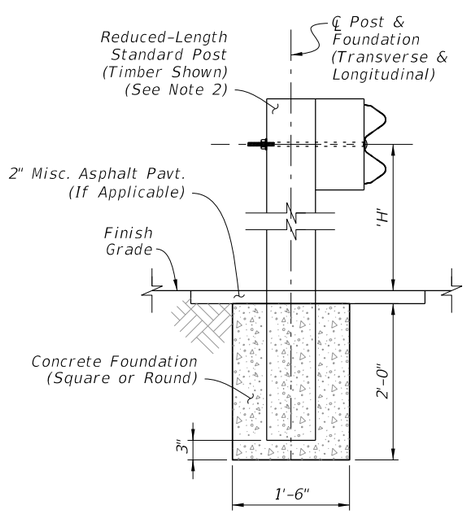

INSTALLED SECTION

NOTES:

1. INSTALLATION: When the construction of Guardrail at the required post spacing results in post(s) conflicting with underground utilities or other underground obstructions, an Encased Post may be used where a 2'-0" depth will avoid the conflict. Install where shown in the plans and/or as-needed, in accordance with Specification 536.

2. REDUCED-LENGTH STANDARD POST: Use a Standard Post with reduced Length such that the Panel Height 'H' is maintained while the post bottom terminates 3" from the bottom of the Concrete Foundation. Typically, the Post Length 'L' is 4'-7" for W-Beam Guardrail.

3. FOUNDATION: Use non-reinforced Class NS Concrete material in accordance with Specification 347. After casting the concrete, ensure the surrounding soil material is completely backfilled and tamped to provide full passive resistance.

4. LIMIT: Encased Posts are not permitted for consecutive posts unless otherwise shown in the plans.

ENCASED POST FOR SHALLOW MOUNT

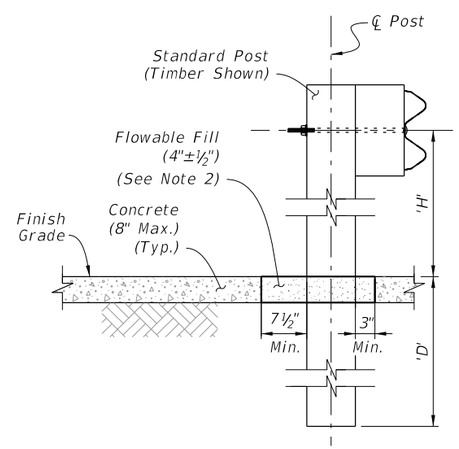

INSTALLED SECTION

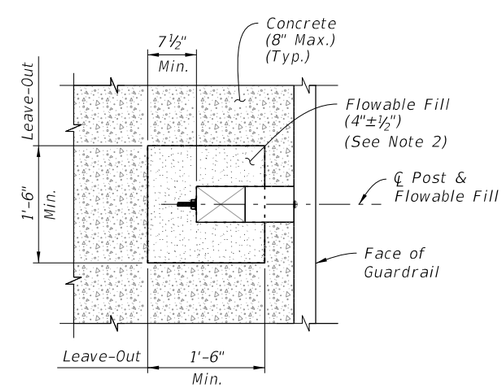

INSTALLED PLAN

NOTES:

1. INSTALLATION: When the construction of Guardrail at the required post spacing results in post(s) placed within a concrete surface (typically a sidewalk), use a Frangible Leave-Out around the post base as shown. Install where shown in the plans and/or as-needed, in accordance with Specification 536.

   For the required 1'-6" x 1'-6" Leave-Out, smoothly cut the existing concrete surface or form-up the square shape when an application has new surrounding concrete.

   Ensure Flowable Fill surface is smooth and even with the adjacent concrete surface.

2. MATERIALS: Use Non-Excavatable Flowable Fill in accordance with Specification 121, not to exceed 150 psi.

FRANGIBLE LEAVE-OUT FOR CONCRETE SURFACE MOUNT

10/25/2018 9:03:20 AM

LAST REVISION	REVISION	DESCRIPTION:				
11/01/17			FY 2019-20 STANDARD PLANS	GUARDRAIL	INDEX 536-001	SHEET 21 of 22

NOTES:

1. INSTALLATION: Install Barrier Delineators as shown in accordance with the plans, with Specifications 536 and 705, and with the manufacturer's design as approved on the APL.
2. MATERIALS: Use materials of the size and type defined for Barrier Delineators in Specifications 993.
3. COLOR: Use either white or yellow retroreflective sheeting to match the color of the nearest lane's edgeline.
4. MOUNT LOCATIONS: Mount Barrier Delineators atop posts as shown, starting with Post (3) of Approach Terminals and incrementally increasing spacing towards the downstream direction. Install the Barrier Delineators at the following spacing:

   S1 = 25' x 1 Space
   S2 = 50' x 1 Space
   S3 = 75' x 1 Space
   S4 = 100' x for the Remaining Run

   Additionally, place a Barrier Delineator on Post (2) of the Trailing Anchorage or on the post nearest the Rigid Barrier.
5. MEDIAN GUARDRAIL: Install retroreflective sheeting on both sides of the barrier delineator for Guardrail on medians.

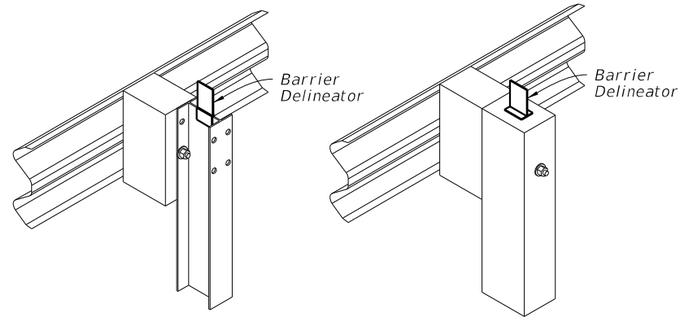

STEEL POSTS TIMBER POSTS

MOUNT LOCATION - ISOMETRIC VIEWS

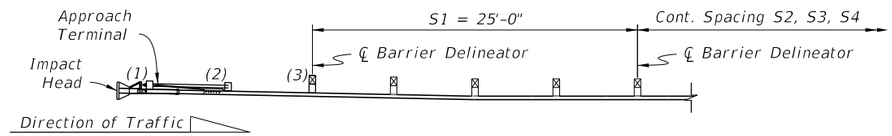

MOUNT LOCATION - PLAN VIEW

BARRIER DELINEATORS

NOTES:

1. INSTALLATION:
   Work these details with the plans, where Stationing for Begin/End Half Spacing and Begin/End Quarter Spacing are indicated if required.

   Where the Begin/End Stations indicated in the plans do not correspond exactly to post locations in construction, extend the Reduced Post Spacing segment to the nearest post(s) before the Begin Station and/or after the End Station called for.
2. PANEL SPLICES: Midspan Panel Splices are not required in Transition and Reduced Post Spacing segments, however they are required for General segments. To place midspan splices in General segments, use one Non-General panel length (9'-4½" or 15'-7½") or add an additional Transition spaced post where required.
3. LOW-SPEED GUARDRAIL: For Reduced Post Spacing with Low-Speed Guardrail (12'-6" post spacing), the Reduced Spacing pattern requires a 6'-3" space between the 12'-6" and 3'-1½" spaces.
4. PANEL POST BOLT SLOTS:
   For Quarter Spacing configurations, punch additional ¾"x2½" Post Bolt Slots in the panels only where required for mounting and in accordance with Specification 536.

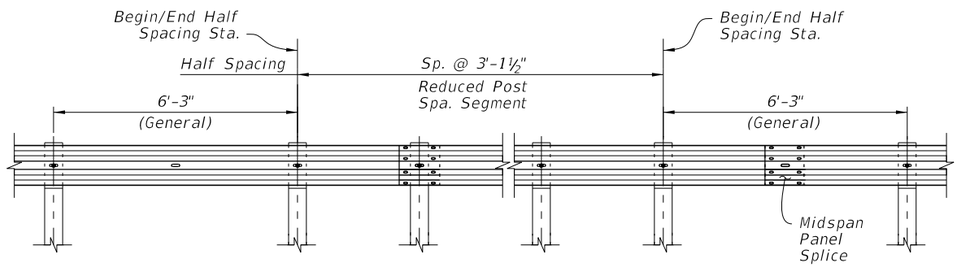

DETAIL 'S' - HALF SPACING ELEVATION
(AS REQD. PER THE PLANS)

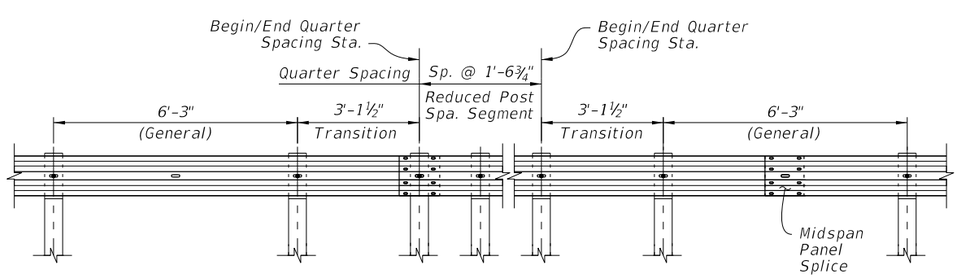

DETAIL 'S' - QUARTER SPACING ELEVATION
(AS REQD. PER THE PLANS)

REDUCED POST SPACING FOR HAZARDS

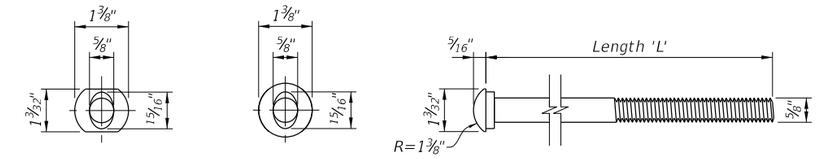

ELEVATION OPTION 1 ELEVATION OPTION 2 PROFILE (Option 1 Shown)

BUTTON-HEAD BOLT

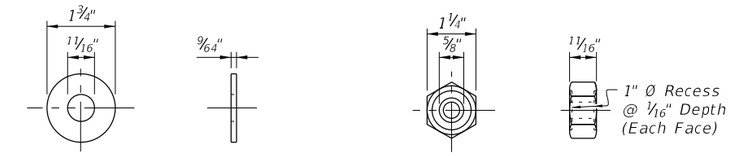

ELEVATION PROFILE ELEVATION PROFILE

WASHER HEX-NUT

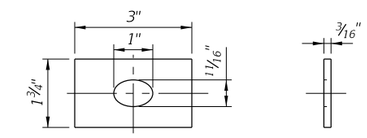

ELEVATION PROFILE

RECTANGULAR WASHER
(For CRT & Terminal Connectors Where Shown - Install Over Panel Face)

BUTTON-HEAD BOLT LENGTHS:

Application(s):	Length 'L':	Min. Thread Length:
Panel Splice	1¼"	Full Length
Steel Post Mount - Single Faced Guardrail	10"	4"
Timber Post Mount - Single Faced Guardrail	18"	4"
Steel or Timber Post Mount - Double Faced Guardrail	25"	4"
Modified Thrie-Beam Panel / Terminal Connector Splice	2"	Full Length

NOTES:

1. Use nuts, bolts, and washers in accordance with Specification 967.
2. For Steel Posts with Double Faced Guardrail, the single 25" Length bolt (one bolt thru both post flanges) may be replaced with two 10" Length bolts (one bolt per post flange).
3. Use bolts listed in Table 2 in corresponding locations shown in this Index.

⅝" BUTTON-HEAD BOLT SYSTEM