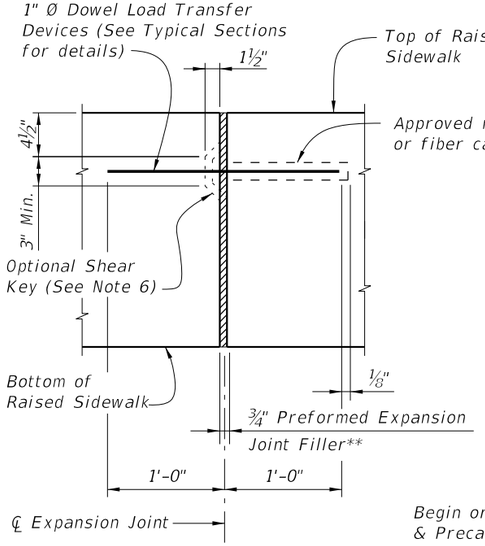

EXPANSION JOINT DETAIL

(Raised Sidewalk expansion joints are to coincide with ¾" open joints in Concrete Barrier)

** Stay-In-Place Plastic Preformed Bond Breakers are permitted to form joints.

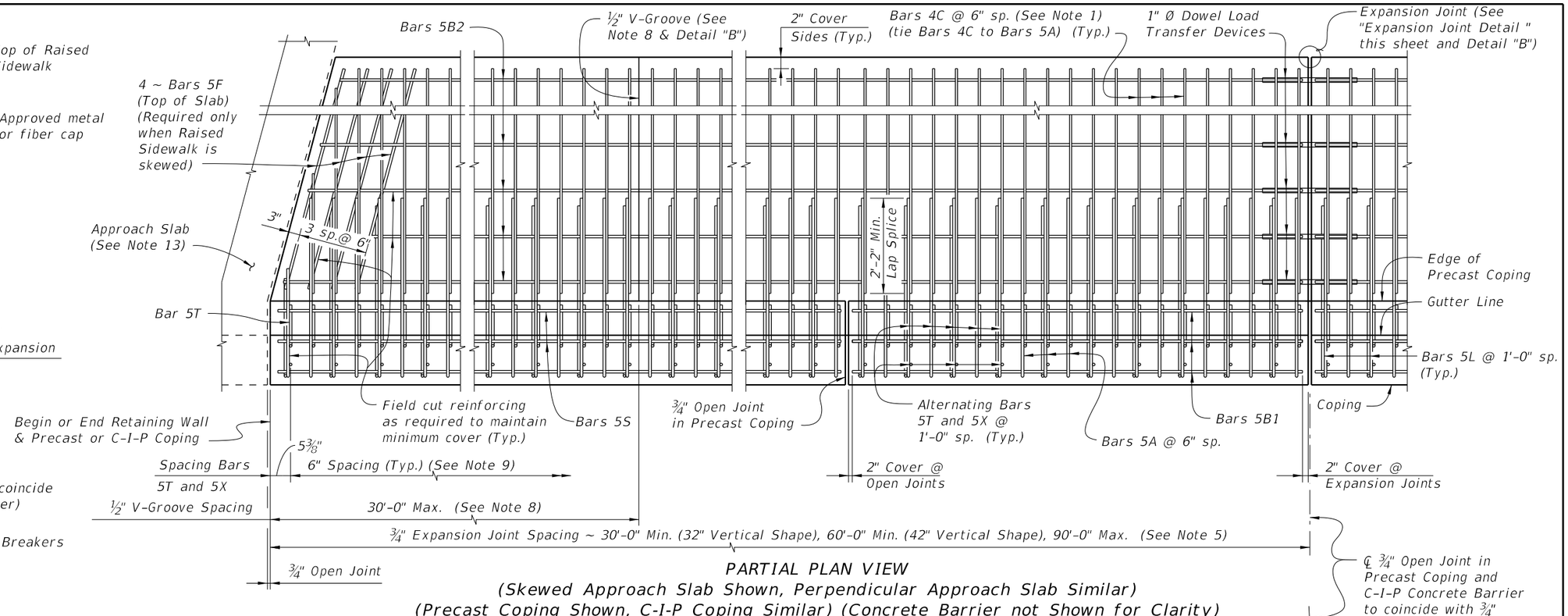

PARTIAL PLAN VIEW

(Skewed Approach Slab Shown, Perpendicular Approach Slab Similar)
(Precast Coping Shown, C-I-P Coping Similar) (Concrete Barrier not Shown for Clarity)

RAISED SIDEWALK NOTES:

1. When a 42" Vertical Shape is used with a precast coping, increase Bars 4C to Bars 5C or provide Bars 4C @ 4" spacing within 6'-0" of Expansion Joints.
2. Construct the expansion joints, V-Grooves and face of coping plumb.
3. Provide Class II concrete for slightly aggressive environments or Class IV for moderately or extremely aggressive environments.
4. Dowel Load Transfer Devices will be hot-dip galvanized ASTM A 36 smooth round bar, or GFRP smooth round bars with a minimum shear strength of 22 ksi in accordance with ASTM D7617. Install Dowel Load Transfer Devices in accordance with Specification Section 350.
5. Construct ¾" Expansion Joints in raised sidewalk and C-I-P copings perpendicular or radial to the Gutter Line. Provide at 90'-0" maximum intervals as shown.
6. Shear Keys in Junction Slab are required when GFRP bars are used for Dowel Transfer Devices and are optional with steel dowel bars. Tongue Slope on Shear Key must be constant and between 5° to 45° from horizontal.
7. Provide and install Preformed Expansion Joint Filler in accordance with Specification Section 932.
8. Construct ½" V-Grooves in raised sidewalk and C-I-P coping at 30'-0" maximum intervals as shown. Space V-Grooves equally between ¾" Expansion Joints and/or Begin or End Raised Sidewalk. V-Groove locations are to coincide with V-Groove locations in the Concrete Barrier.
9. Spacing shown is along the Gutter Line.
10. For Precast Coping only, provide Dowel Bars 4D embedded 1'-0" and extend 9" above the top of MSE wall panels. Field cut as necessary to maintain 2" minimum cover to the top of the buildup concrete. See Wall Company Drawings for number and spacing of Dowel Bars 4D.
11. Finish Sidewalks in accordance with Specification Section 522.
12. The following Indexes contain details of the intersection of the retaining wall at approach slabs:
    Index 400-090 - Approach Slabs (Flexible Pavement Approaches)
    Index 400-091 - Approach Slabs (Rigid Pavement Approaches)

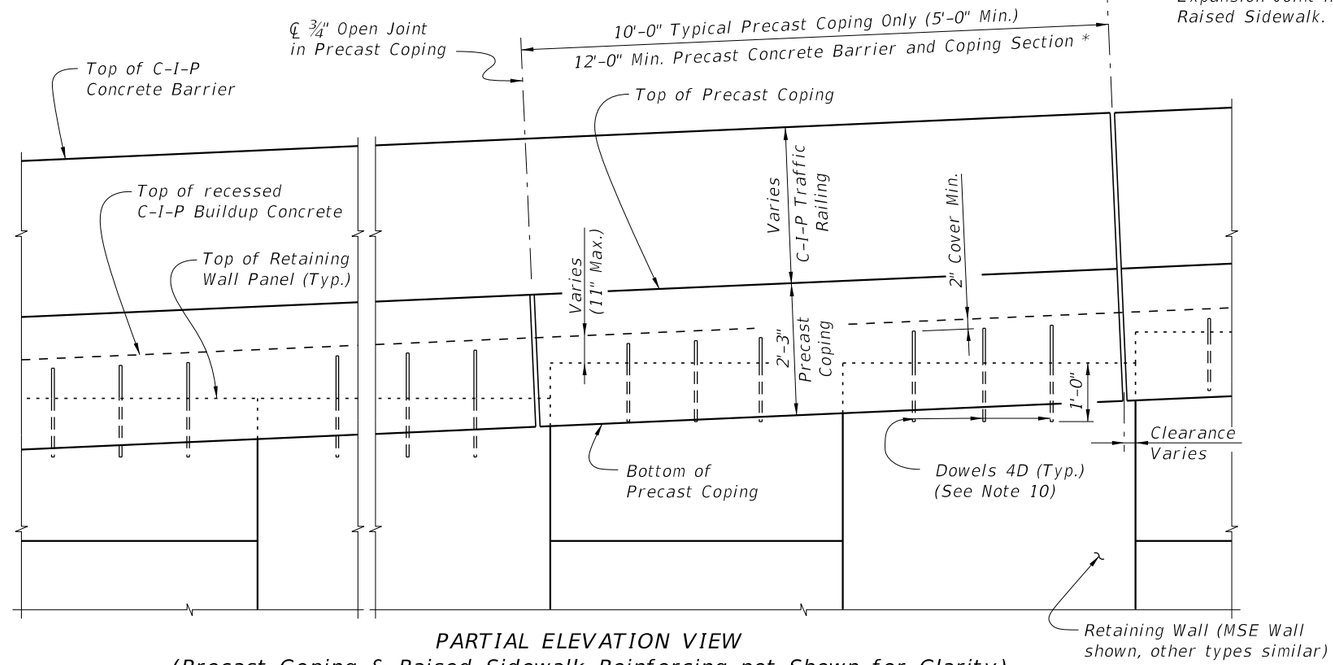

PARTIAL ELEVATION VIEW

(Precast Coping & Raised Sidewalk Reinforcing not Shown for Clarity)
(Precast Coping Shown, C-I-P Coping Similar)

* C-I-P End Section must be ≥ 12'-0".

CROSS REFERENCE: For Detail "B", see Sheet 4.

VERTICAL SHAPE

10:58:20 AM
10/30/2018

LAST REVISION	REVISION	DESCRIPTION:			INDEX	SHEET
11/01/18			FDOT FY 2019-20 STANDARD PLANS	CONCRETE BARRIER/RAISED SIDEWALK - WALL COPING	521-620	1 of 4

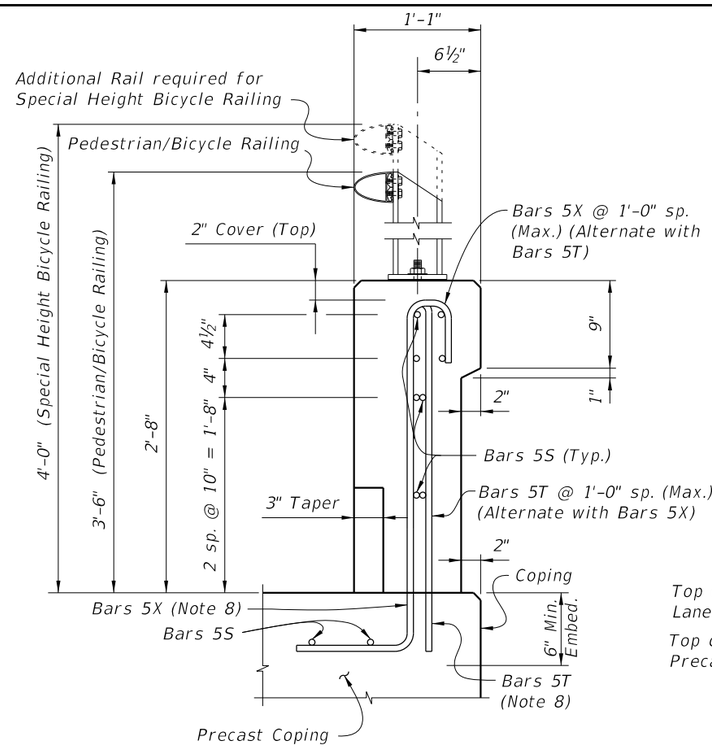

END VIEW OF 32" VERTICAL SHAPE END TRANSITION FOR GUARDRAIL ATTACHMENT
(Showing Bars 5S, Bars 5T and Bars 5X)
(Precast Coping Shown, C-I-P Coping Similar)

NOTE: See Sheet 4 for End Transition Elevation.

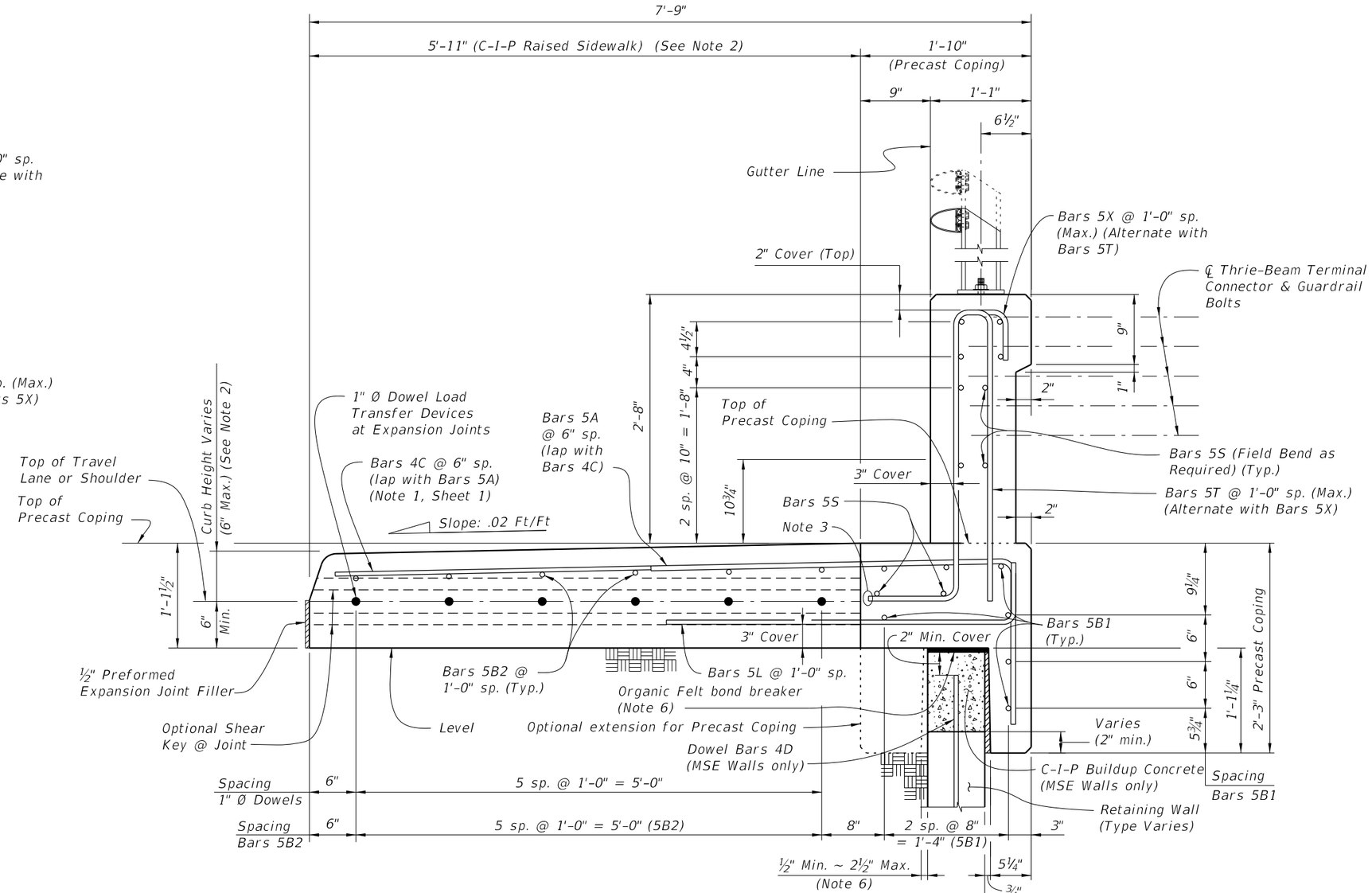

TYPICAL SECTION THRU PRECAST COPING WITH C-I-P RAISED SIDEWALK AND RETAINING WALL AT EXPANSION JOINTS
(32" Vertical Shape Shown, 42" Vertical Shape Similar)

ESTIMATED QUANTITIES FOR PRECAST COPING		
ITEM	UNIT	QUANTITY
Concrete (Precast Coping)	CY/LF	0.095
Concrete (C-I-P Raised Sidewalk)	CY/LF	0.232
Reinforcing Steel (Precast Coping) excluding Bars 5T, 5X and 5S (Typ.)	LB/LF	23.90
Reinforcing Steel (C-I-P Raised Sidewalk) (Typ.)	LB/LF	13.50
Additional Reinf. @ Expansion Joints (Steel Dowels)	LB	32.04

The above concrete quantities are based on a Type D Concrete Curb (See Note 2).

NOTES:
1. Actual width varies depending on type of Retaining Wall used.
2. Match roadway curb shape (Type) and height. See Roadway Plans and Index 520-001. 5'-11" dimension is based on a 32" Vertical Shape with a Type D curb adjacent to a 6'-0" wide sidewalk. Adjust this dimension as required for other curb types or transitions at Begin or End Retaining Wall.
3. Trim end of Bars 5T and 5X to clear construction joint for 42" Vertical Shape.
4. At the Contractor's option, mechanical couplers may be used to splice reinforcing. Complete details, including reinforcement lengths are required in the Shop Drawings. Mechanical couplers shall develop 125% of the bar yield strength.
5. Contractor to maintain stability of precast coping prior to junction slab completion.
6. When the air gap between the precast coping extension and retaining wall exceeds 2½", fill gap with full depth Expanded Polystyrene to provide a maximum 2½" air gap.
7. For Bullet Railings, see Index 515-821 and 515-822.
8. Begin placing Railing Bars 5T and 5X at the railing end and proceed toward Retaining Wall to avoid conflict with guardrail bolt holes. If required, adjustments to the bar spacing for Bars 5T and 5X shall be made immediately adjacent to Begin or End Bridge. Cut, shift and rotate Bars 5T and 5X as required to maintain cover in End Transition.

32" VERTICAL SHAPE

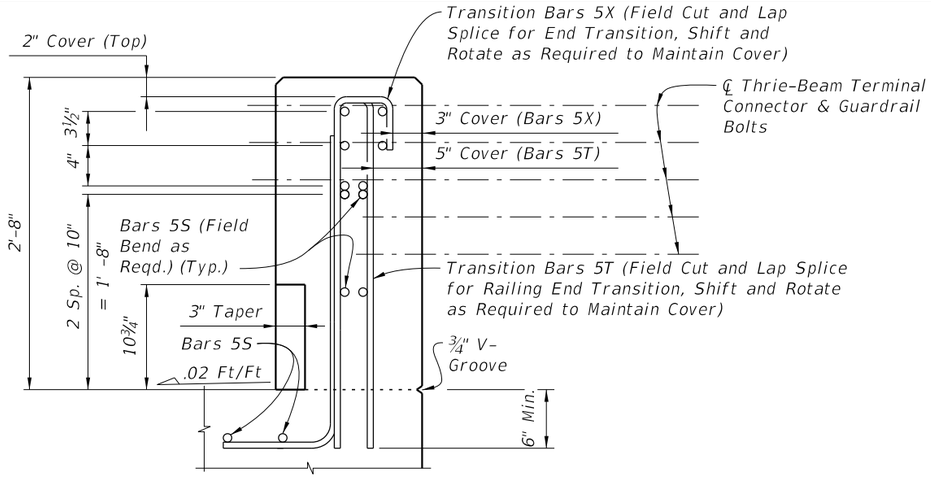

END VIEW OF VERTICAL FACE END TRANSITION

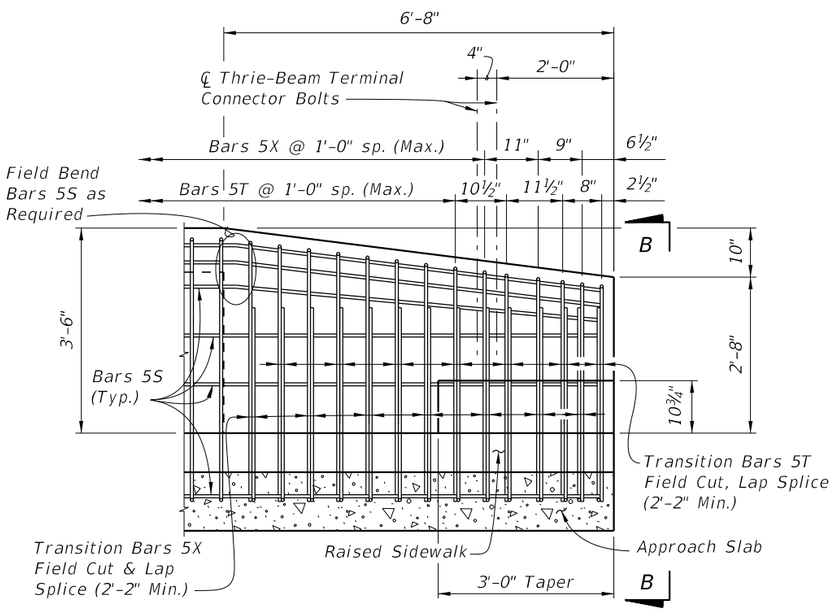

ELEVATION
END TRANSITION
(Guardrail Not Shown For Clarity)

ESTIMATED QUANTITIES FOR C-I-P COPING		
ITEM	UNIT	QUANTITY
Concrete	CY/LF	0.326
Reinforcing Steel (Typical) excluding Bars 5T, 5X and 5S (Typ.)	LB/LF	35.38
Additional Reinf. @ Expansion Joints (Steel Dowels)	LB	32.04

The above concrete quantities are based on a Type D Concrete Curb on a level Retaining Wall (See Note 1).

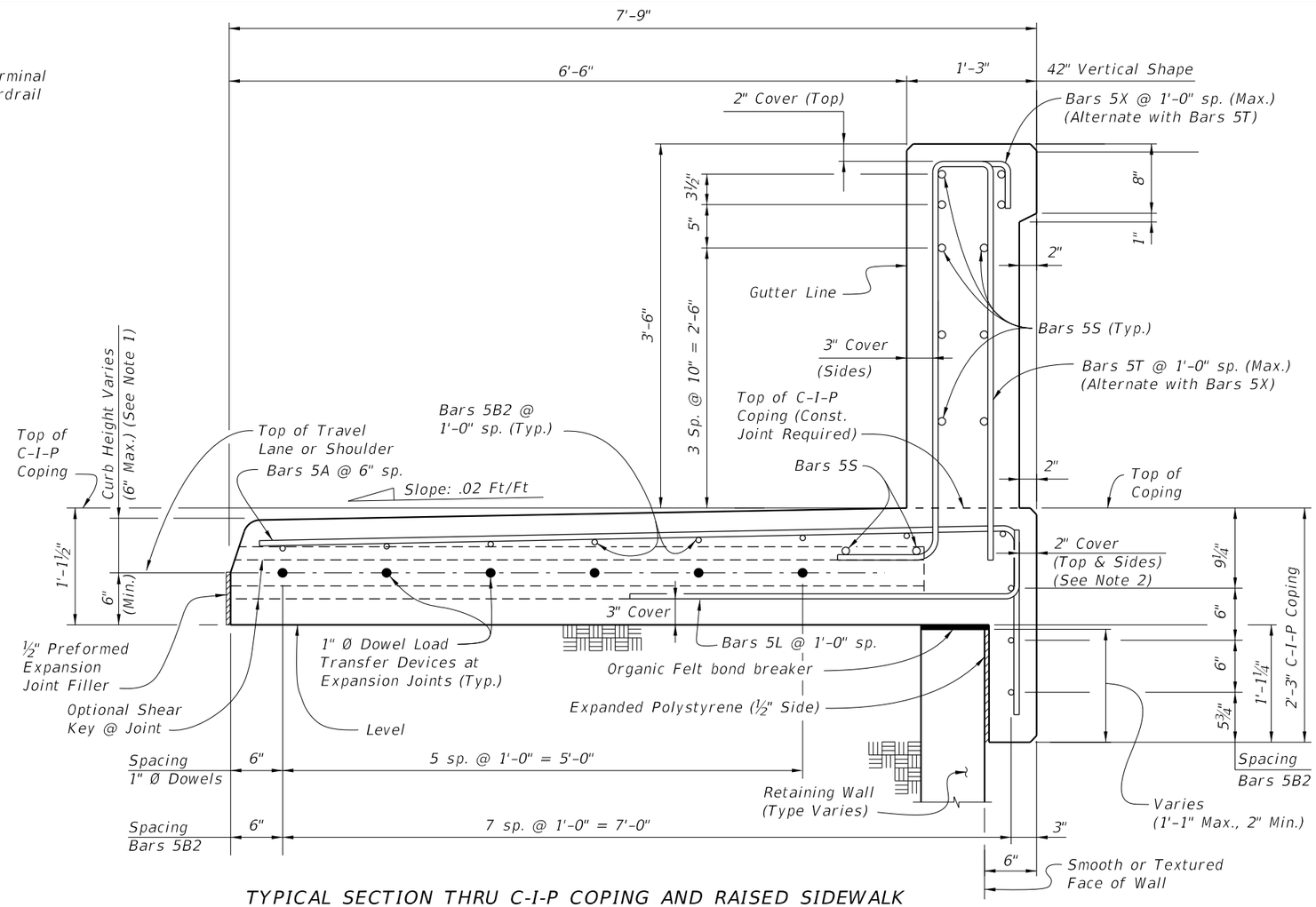

TYPICAL SECTION THRU C-I-P COPING AND RAISED SIDEWALK
AND RETAINING WALL AT EXPANSION JOINTS
(42" Vertical Face Shown, 32" Vertical Face Similar)

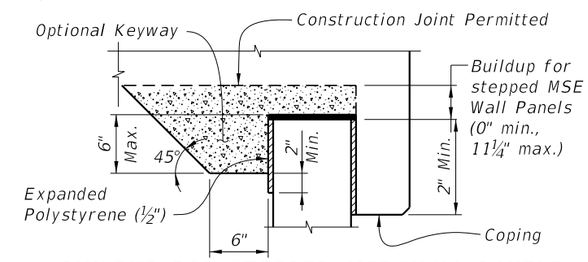

BUILDUP FOR STEPPED MSE WALL PANELS
AND C-I-P COPING

NOTES:
1. Match roadway curb shape (Type) and height. See Roadway Plans and Index 520-001. 6'-6" dimension is based on a 42" Vertical Shape with a Type D curb adjacent to a 6'-0" wide sidewalk. Adjust this dimension as required for other curb types or transitions at Begin or End Retaining Wall.
2. If slip forming is used, submit shop drawings for approval showing 3" side cover with the Typical Section dimensions adjusted.
3. Begin placing Railing Bars 5T and 5X at the railing end and proceed toward Retaining Wall to avoid conflict with guardrail bolt holes. If required, adjustments to the bar spacing for Bars 5T and 5X shall be made immediately adjacent to Begin or End Retaining Wall. Cut, shift and rotate Bars 5T and 5X as required to maintain cover in End Transition.

42" VERTICAL SHAPE

CONVENTIONAL REINFORCING STEEL BENDING DIAGRAMS

BILL OF REINFORCING STEEL

MARK	SIZE	LENGTH	
		PRECAST COPING/ RAILING	C-I-P COPING
A	5	5'-11"	9'-1"
B1	5	9'-6"/11'-6"	N/A
B2	5	AS REQD.	AS REQD.
C	4	5'-5"	N/A
F	5	5'-0"	5'-0"
L	5	4'-5"	4'-5"
1" Ø Dowel	Smooth Bar	2'-0"	2'-0"
		32"	42"
T	5	7'-4"	9'-2"
X	5	5'-1"	6'-0"

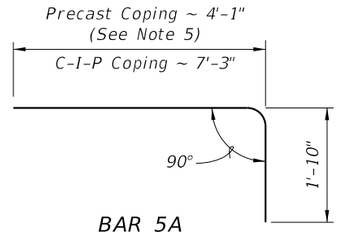

BAR 5A

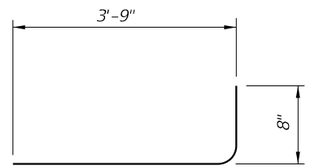

BAR 5L

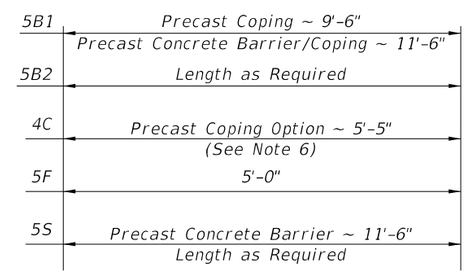

BARS 5B1, 5B2, 4C, 5F & 5S

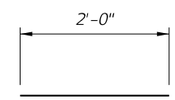

1" Ø DOWEL

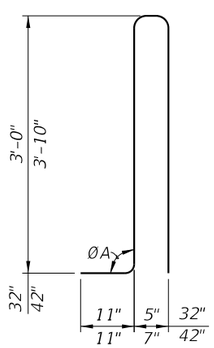

STIRRUP BAR 5T

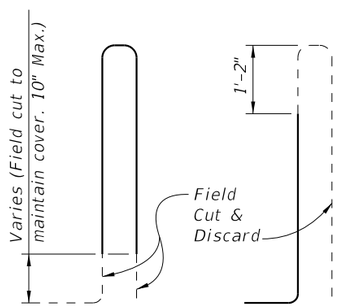

END TRANSITION STIRRUP BARS 5T FOR 42"

To Be Field Cut (7 of each required per Railing End Transition)

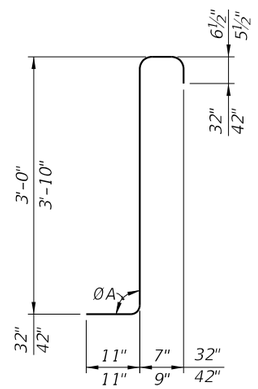

STIRRUP BAR 5X

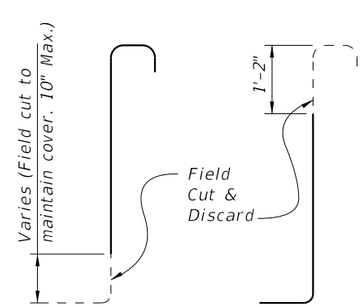

END TRANSITION STIRRUP BARS 5X FOR 42"

To Be Field Cut (7 of each required per Railing End Transition)

REINFORCING STEEL NOTES:

1. All bar dimensions in the bending diagrams are out to out.
2. All reinforcing steel at expansion joints will have a 2" minimum cover.
3. Lap splices for Bars 5B and 5S will be a minimum of 2'-2".
4. Lap splice Bars 5A with Bars 4C will be a minimum of 2'-2".
5. Dimension shown is for lap splice option. For mechanical coupler option, this dimension is 1'-8".
6. Dimension shown is for lap splice option. For mechanical coupler option, this dimension is 5'-8", and reinforcing size must be increased to #5 bars (Bars 5C).
7. The Contractor may use deformed WWR when approved by the Engineer. WWR must meet the requirements of Specification Section 931.

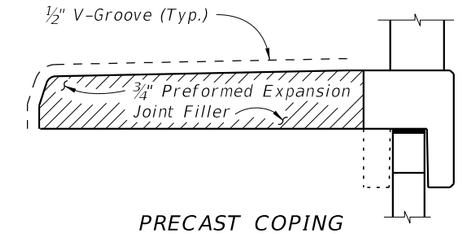

PRECAST COPING

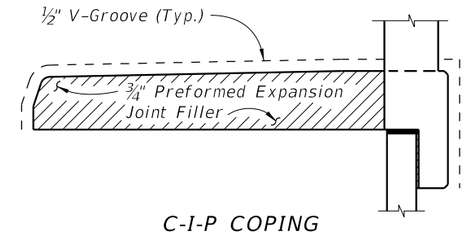

C-I-P COPING

DETAIL "B"

(Showing Locations of ½" V-Grooves and ¾" Preformed Expansion Joint Filler)

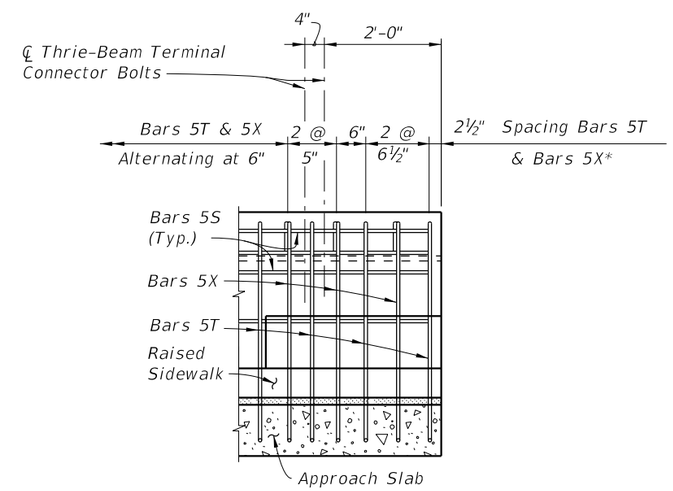

END TRANSITION ELEVATION FOR 32" VERTICAL SHAPE (Guardrail Not Shown For Clarity)

* See Sheet 3 Note 3.

ESTIMATED CONCRETE BARRIER QUANTITIES

ITEM	UNIT	QUANTITY 32"	QUANTITY 42"
Concrete	CY/LF	0.095	0.145
Reinforcing Steel	LB/LF	23.38	28.33

VERTICAL SHAPE

10/30/2018 10:58:31 AM