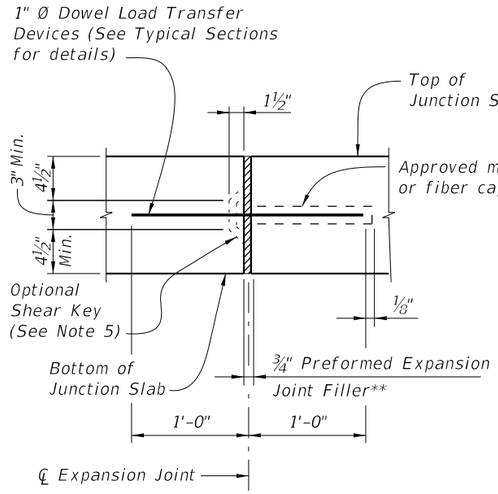

EXPANSION JOINT DETAIL

(Junction Slab expansion joints are to coincide with ¾" open joints in Concrete Barrier)

** Stay-In-Place Plastic Preformed Bond Breakers are permitted to form joints.

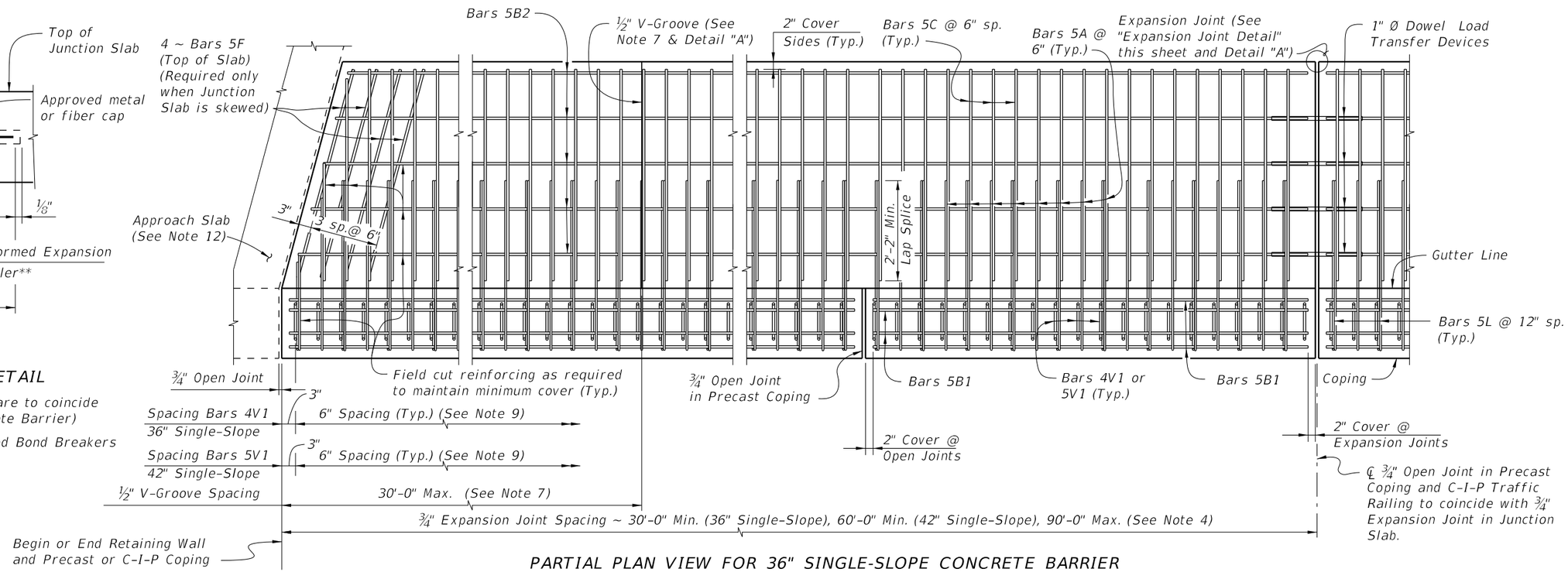

PARTIAL PLAN VIEW FOR 36" SINGLE-SLOPE CONCRETE BARRIER

(Skewed Approach Slab Shown, Perpendicular Approach Slab Similar)
(Precast Coping Shown, C-I-P Coping Similar) (Concrete Barrier not Shown for Clarity)

JUNCTION SLAB NOTES:

1. Construct the expansion joints, V-Grooves and face of coping plumb.
2. Provide Class II concrete for slightly aggressive environments or Class IV for moderate or extremely aggressive environments.
3. Dowel Load Transfer Devices will be hot-dip galvanized ASTM A 36 smooth round bar, or GFRP smooth round bars with a minimum shear strength of 22 ksi in accordance with ASTM D7617. Install Dowel Load Transfer Devices in accordance with Specification Section 350.
4. Construct ¾" Expansion Joints in junction slabs and C-I-P copings plumb and perpendicular or radial to the Gutter Line. Provide at 90'-0" maximum intervals as shown. Provide 3"x3" Mortar plugs in open joints at the base of Concrete Barriers to contain runoff.
5. Shear Keys in Junction Slab are required when GFRP bars are used for Dowel Transfer Devices and are optional with steel dowel bars. Tongue Slope on Shear Key must be constant and between 5° to 45° from horizontal.
6. Provide and install Preformed Expansion Joint Filler in accordance with Specification Section 932.
7. Construct ½" V-Grooves in junction slabs and C-I-P copings at 30'-0" maximum intervals as shown. Space V-Grooves equally between ¾" Expansion Joints and/or Begin or End Junction Slab. V-Groove locations are to coincide with V-Groove locations in the Concrete Barrier.
8. Shoulder or Roadway Pavement is required on top of the junction slab for its entire length on the traffic side of the Concrete Barrier. See Typical Sections on Sheets 2 and 3 for details.
9. Spacing shown is along the Gutter Line.
10. For Precast Coping only, provide Dowel Bars 4D embedded 1'-0" and extended 9" above the top of MSE wall panels. Field cut as necessary to maintain 2" minimum cover to the top of the buildup concrete. See Wall Company Drawings for number and spacing of Dowel Bars 4D.
11. The following Indexes contain details of the intersection of the retaining wall at approach slabs:
    Index 400-090 – Approach Slabs (Flexible Pavement Approaches)
    Index 400-091 – Approach Slabs (Rigid Pavement Approaches)

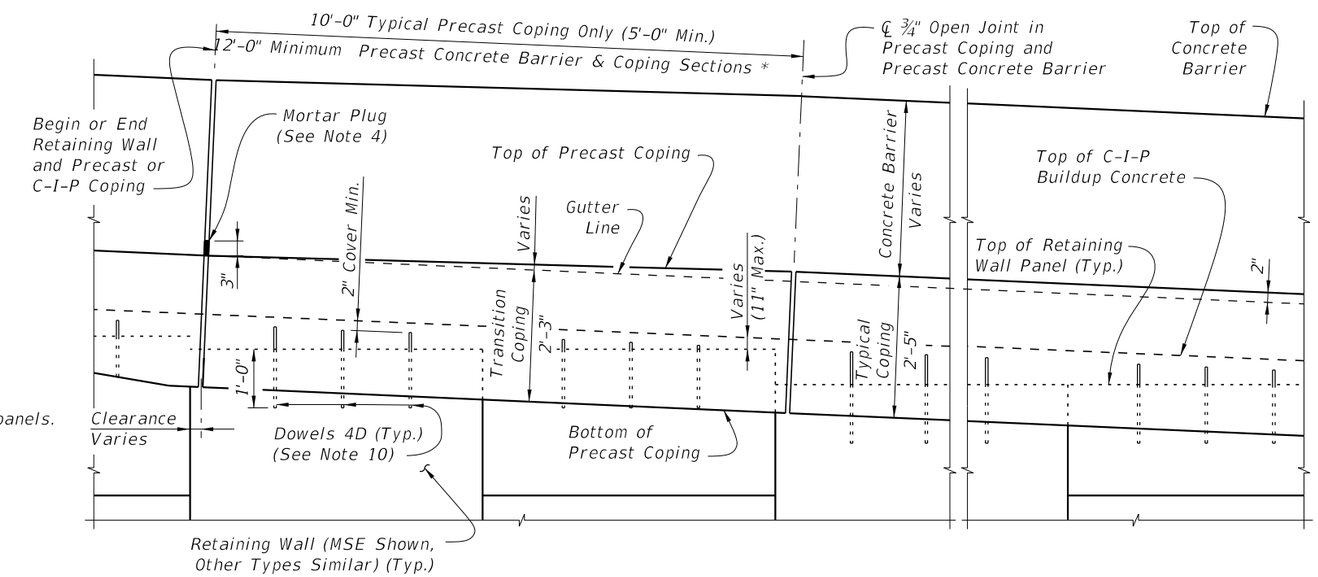

PARTIAL ELEVATION VIEW

(Precast Coping and Junction Slab Reinforcing not Shown for Clarity)
(Precast Coping Shown, C-I-P Coping Similar)

* C-I-P End Section must be ≥ 12'-0".

CROSS REFERENCE: For Detail "A", see Sheet 2.

SINGLE-SLOPE CONCRETE BARRIERS

LAST REVISION	REVISION	DESCRIPTION:				
11/01/17			FDOT FY 2019-20 STANDARD PLANS	CONCRETE BARRIER/JUNCTION SLAB - WALL COPING	INDEX 521-610	SHEET 1 of 3

10/24/2018 2:34:18 PM

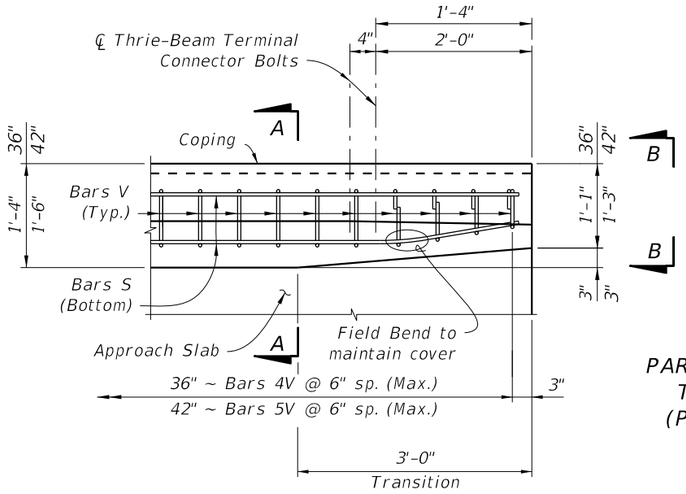

PLAN - RAILING END TRANSITION
(Showing Bars V and S)

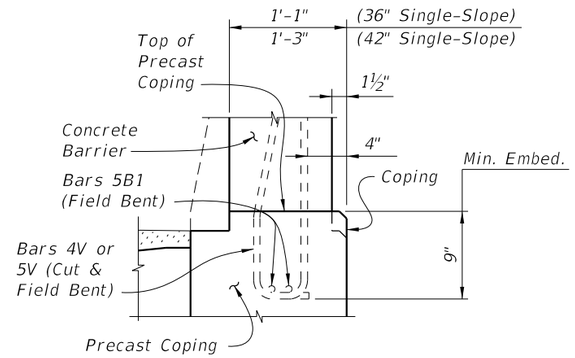

PARTIAL END VIEW OF CONCRETE BARRIER END TRANSITION FOR GUARDRAIL ATTACHMENT
(Precast Coping Shown, C-I-P Coping Similar)

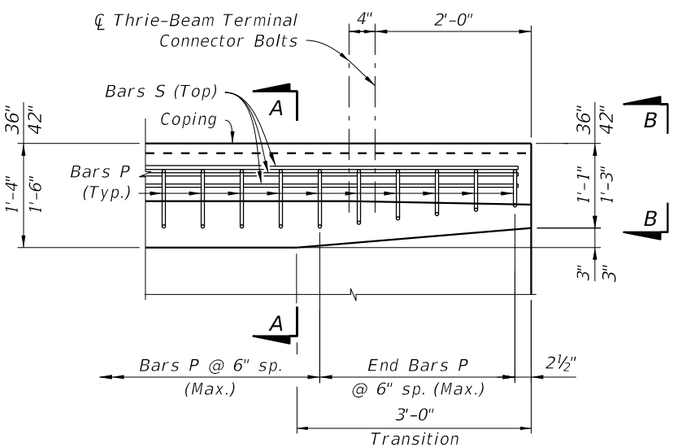

PLAN - RAILING END TRANSITION
(Showing Bars P and S)

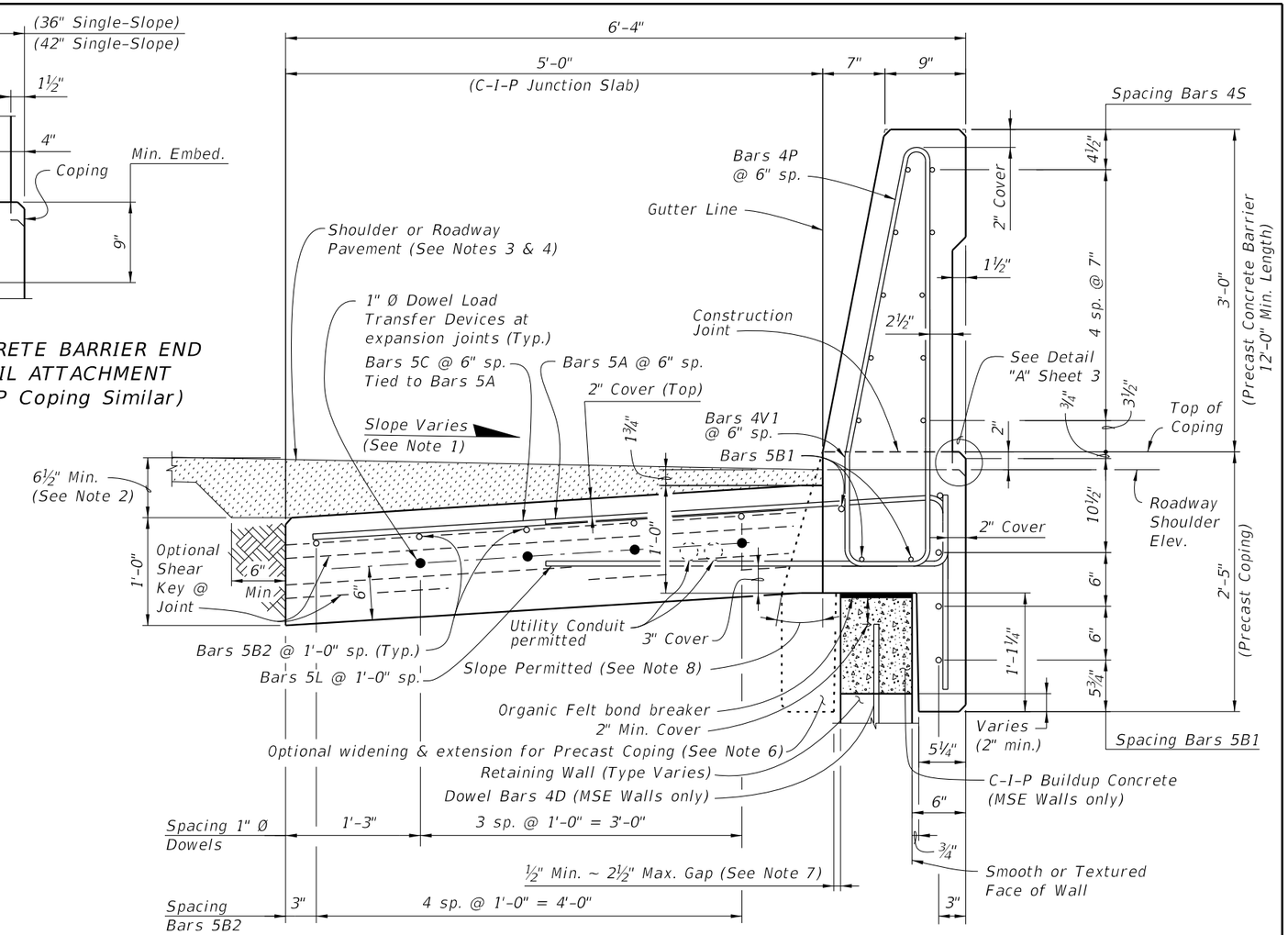

TYPICAL SECTION THRU PRECAST 36" SINGLE-SLOPE
CONCRETE BARRIER AND COPING WITH C-I-P JUNCTION SLAB

DETAIL "A"

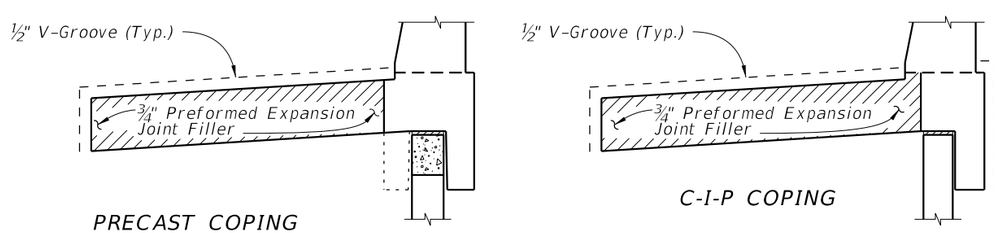

DETAIL "A"
(Showing Locations of ½" V-Grooves and ¾" Preformed Expansion Joint Filler)

NOTES:

1. Match Cross Slope of Travel Lane or Shoulder.
2. Vary Junction Slab slope based on roadway cross slope to maintain a minimum 6" asphalt depth at the edge of the slab as shown.
3. For Rigid Pavement (Concrete), Junction Slab may be thickened to match finished grade. Vary the Junction Slab slope to maintain a minimum 1'-6" thickness at the edge of the slab.
4. For Asphalt: Shoulder or Roadway Pavement will be SuperPave Structural asphalt. Variable thickness asphalt will be structural overbuild.
5. Minimum length of Junction Slab between expansion joints is 30'-0".
6. At the Contractor's option, mechanical couplers may be used to splice reinforcing. Complete details, including reinforcement lengths are required in the Shop Drawings. Provide mechanical couplers in accordance with Specification Section 415. Mechanical couplers shall develop 125% of the bar yield strength.
7. Contractor to maintain stability of precast coping/Concrete Barrier prior to junction slab completion. In the Shop Drawings, show reinforcement for optional extension required for stability, shipping and handling. Maintain 2" minimum concrete cover.
8. When the air gap between the precast coping extension and retaining wall exceeds 2½", fill gap with full depth Expanded Polystyrene to provide a maximum 2½" air gap.
9. Angle varies ~ 0° min., 25° max.

REINFORCING STEEL BENDING DIAGRAMS

BILL OF REINFORCING STEEL

MARK	SIZE	LENGTH			
		PRECAST COPING FOR SINGLE-SLOPE		C-I-P COPING FOR SINGLE-SLOPE	
		(36")	(42")	(36")	(42")
A	5	5'-3"	5'-5"	7'-10"	8'-0"
B1	5	11'-6"	9'-6"	AS REQD.	AS REQD.
B2	5	AS REQD.	AS REQD.	AS REQD.	AS REQD.
C	5	4'-10"	4'-10"	N/A	N/A
F	5	4'-10"	4'-10"	4'-10"	4'-10"
L	5	4'-5"	4'-5"	4'-5"	4'-5"
P	4	5'-11"	N/A	5'-11"	N/A
P	5	N/A	7'-0"	N/A	7'-0"
S	4	11'-6"	N/A	AS REQD.	N/A
S	6	N/A	9'-6"	N/A	AS REQD.
V1	4	5'-9"	N/A	5'-9"	N/A
V1	5	N/A	6'-4"	N/A	6'-4"
1" Ø Dowel	Smooth Bar	2'-0"	2'-0"	2'-0"	2'-0"

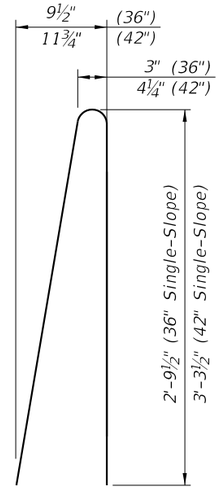

STIRRUP BAR
4P (36") 5P (42")

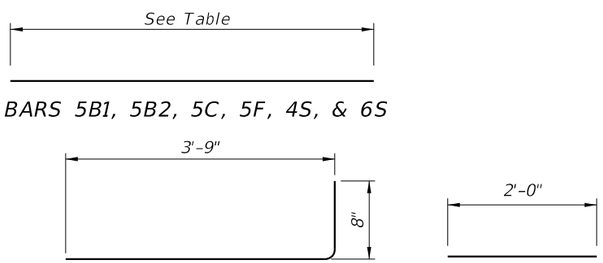

BARS 5B1, 5B2, 5C, 5F, 4S, & 6S

BARS 5L

1" Ø DOWEL

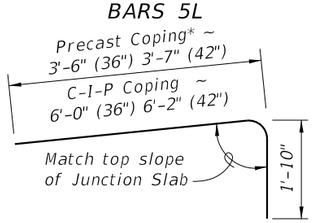

BAR 5A

* See Note 5 & 6

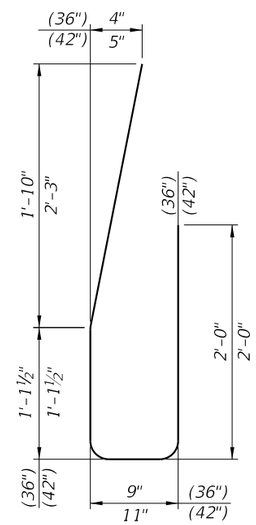

STIRRUP BAR
4V1 (36") 5V1 (42")

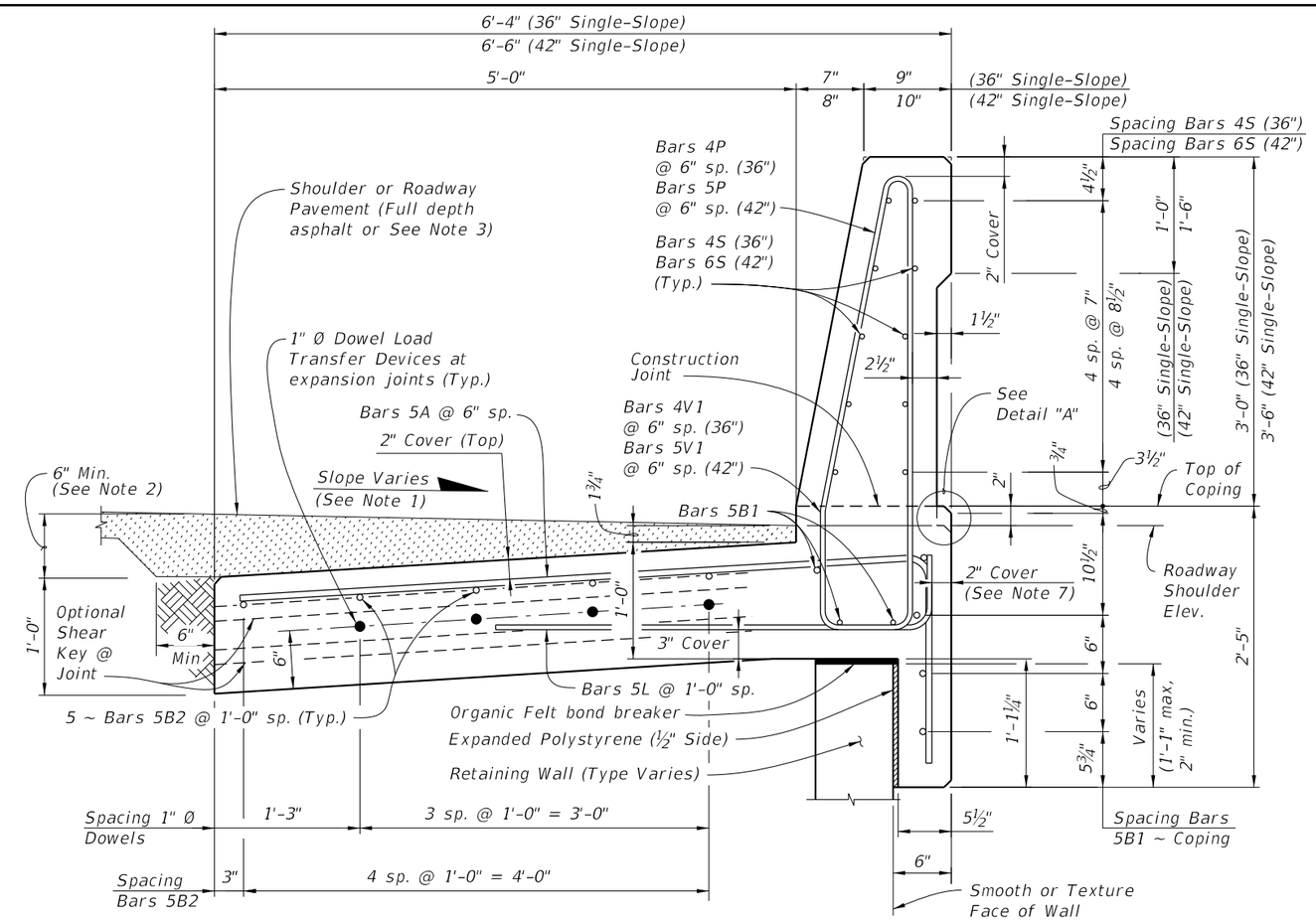

TYPICAL SECTION THRU C-I-P CONCRETE BARRIER WITH C-I-P JUNCTION SLAB AND C-I-P COPING
(PRECAST COPING SIMILAR WITH C-I-P BUILDUP)

NOTES:

1. Match Cross Slope of Travel Lane or Shoulder.
2. Vary the Junction Slab slope based on the roadway cross slope to maintain a minimum 6" asphalt depth at the edge of the slab.
3. For Rigid Pavement (Concrete), Junction Slab may be thickened to match finish grade. Vary the Junction Slab slope to maintain a minimum 1'-6" thickness at the inside edge of the slab.
4. Minimum length of Junction Slab between expansion joints is 30'-0" for 36" Single-Slope or 60'-0" for 42" Single-Slope.
5. Contractor to maintain stability of precast coping prior to junction slab completion. In the Shop Drawings, show reinforcement for optional extension required for stability, shipping and handling. Maintain 2" minimum concrete cover.
6. If slip forming is used, submit shop drawings for approval showing 2½" side cover with the Typical Section dimensions adjusted.

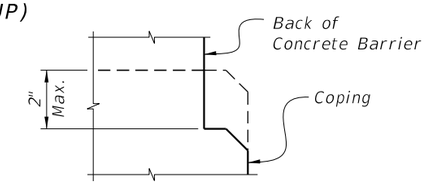

DETAIL "A"
OPTIONAL NOTCH AT TOP OF COPING

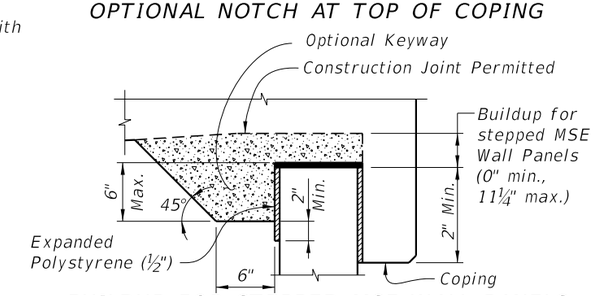

BUILDUP FOR STEPPED MSE WALL PANELS
AND C-I-P COPING

SINGLE-SLOPE CONCRETE BARRIERS

ESTIMATED QUANTITIES FOR C-I-P			
ITEM	UNIT	QUANTITY (36")	QUANTITY (42")
Concrete	CY/LF	0.376	0.420
Reinforcing Steel (Typical) (excludes Bars 5C & 5F)	LB/LF	62.45	82.17
Additional Reinf. @ Expansion Joint (Steel Dowels)	LB	21.36	21.36

(The above concrete quantities are based on a max. superelevation of 6.25%)

REINFORCING STEEL NOTES:

1. All bar dimensions in the bending diagrams are out to out.
2. All reinforcing steel at expansion and open joints will have a 2" minimum cover.
3. Lap splices for Bars 5B & 5S will be a minimum of 2'-2".
4. For Precast Copings only, lap splice Bars 5A with Bars 5C. Lap splices will be a minimum of 2'-2".
5. The Contractor may use either full length Bars 5A or lap splice with Bars 5C at Bars 5A for C-I-P Copings.
6. Dimension shown is for lap splice option. For mechanical coupler option, this dimension is 1'-2½" (36" Single-Slope) or 1'-4½" (42" Single-Slope).
7. Dimension shown is for lap splice option. For mechanical coupler option, this dimension is 4'-8".
8. When approved by the Engineer, the Contractor may use deformed Welded Wire Reinforcement (WWR) meeting the requirements of Specification Section 931.
9. Contractor may use a single #5 stirrup in lieu of two bars for 4P and 4V1.

10/24/2018 2:34:21 PM