SHEET NO.	CONTENTS
1	Index Contents; General Notes
2	Example Layouts - Footing Placement and Connections
3	Barrier Plan and Elevation - Connection to Concrete Barrier - Connection to Guardrail
4	Barrier Details - Connection to Concrete Barrier
5	Barrier Details - Connection to Guardrail
6	Barrier Footing Options
7	Crash Wall Details
8	Reinforcing Bar Bending Diagrams

GENERAL NOTES:

1. CONCRETE: Use Class III or IV concrete unless otherwise called for in the Plans.

2. CONSTRUCTION JOINTS: Maintain continuity of reinforcement steel across Construction Joints; reinforcement lap splices are permitted immediately adjacent to joints. Construct all Pier Protection Barrier continuously, with no expansion or contraction joints. Construction Joints are classified herein as Transverse Joints or Longitudinal Joints.

   Transverse Joints are permitted at 40 foot or greater intervals along the barrier.

   Longitudinal Joints may only be installed where indicated in the following details and notes, with a location tolerance of ± 1" from the locations shown.

3. FOUNDATION: Compact the top 12" of the foundation subgrade to at least 95% of the maximum density determined by FM 1-T180, Method D.

4. DRAINAGE INLETS: See Index 425-001 for Shoulder Barrier Inlets, and isolate these structures from Pier Protection Barriers and Footings with 1" Preformed Joint Filler.

5. BARRIER END MARKERS: For all free ends of barriers that are not connected to guardrail or concrete barrier, install a Type 3 Object Marker on the end face per Specification 705.

6. BARRIER DELINEATORS: Install Barrier Delineators in accordance with Specification 705. Mount the delineators on the top face of the barrier, with the roadway side of the delineator located 2" from the front face of the barrier and the reflective sheeting facing traffic of the nearest approach.

7. CRACK CONTROL: Provide ½" depth crack control V-Grooves at 15' to 30' spacing. Locate V-Grooves above any joint or discontinuity in the barrier footing. Align V-Grooves perpendicular to the longitudinal axis of the Pier Protection Barrier and make continuous across the top surface and both side faces. For slip formed barriers, score ½" V-Grooves while the concrete is still plastic, otherwise pre-form the joints when stationary forms are utilized.

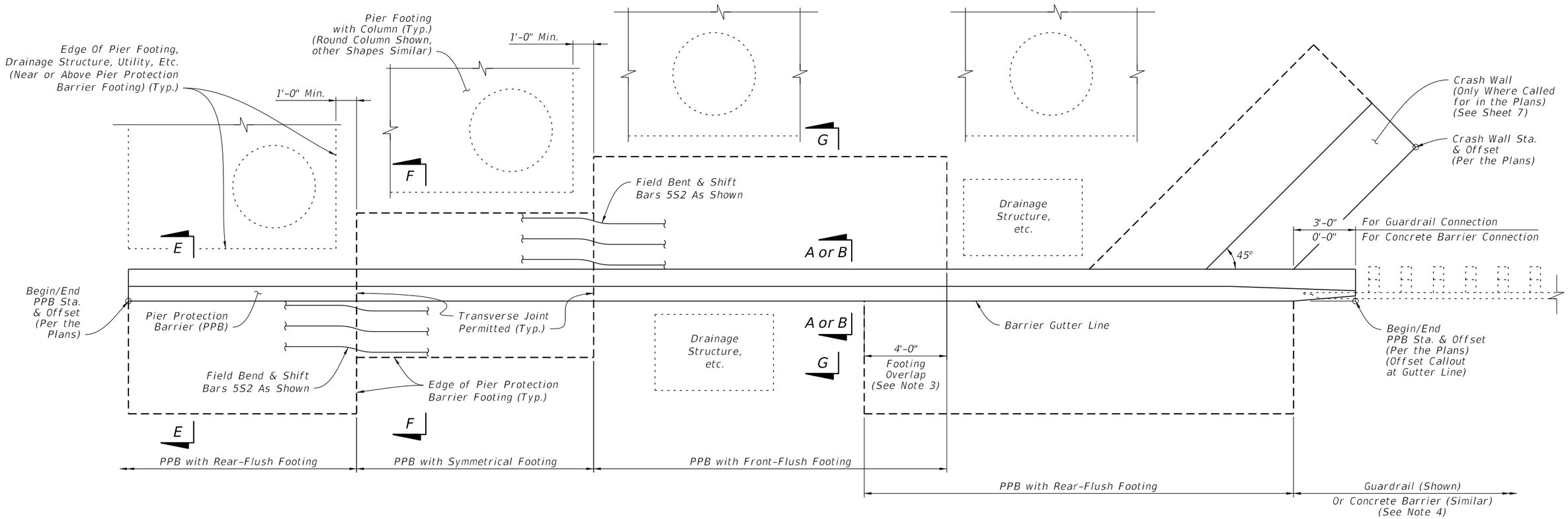

EXAMPLE PLAN VIEW

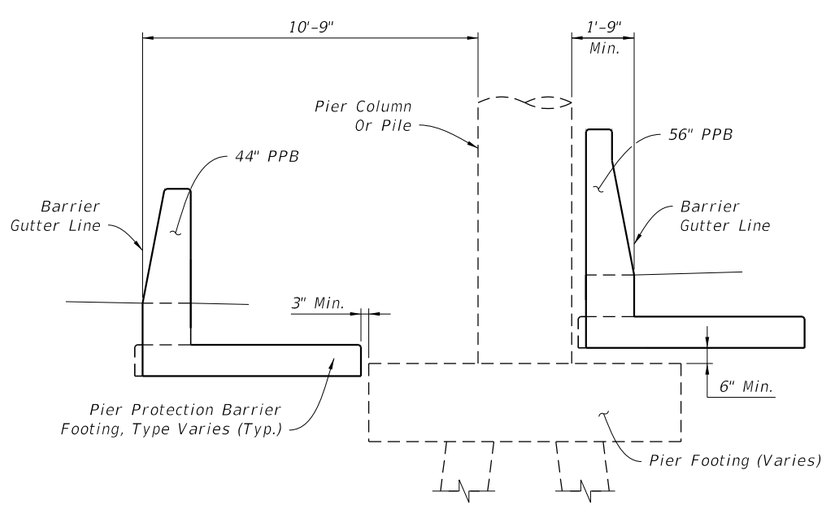

EXAMPLE SECTION VIEW

NOTES:

1. GENERAL: The views shown herein are schematic only, showing example layouts for Pier Protection Barrier (PPB) footings and Crash Wall placement in relation to adjacent miscellaneous structures (including bridge piers, footings, drainage structures, etc.). The actual PPB footing placement depends on the project-specific configuration of adjacent structures and obstacles. For project-specific locations of PPB and adjacent features, see the Plans.

2. MINIMUM FOOTING LENGTH: The minimum length of a single footing option (i.e. Symmetrical Footing, Rear-Flush Footing, Front-Flush Footing), is 8'-0", measured longitudinally. See Sheet 6 for the footing option details.

3. FOOTING OVERLAP: When a Front-Flush Footing section connects to a Rear-Flush Footing section, a 4'-0" footing overlap is required as shown. In footing overlap segments, place all lateral steel reinforcement continuously for the entire width of the combined footing while maintaining the cover requirements per Sheet 6.

4. CONNECTING GUARDRAIL OR CONCRETE BARRIER: Connect the PPB to either Guardrail or Concrete Barrier as specified in the Plans. For additional Guardrail Details, see Sheet 3 and Index 536-001. For additional Concrete Barrier Details, see Sheet 3 and Index 521-001.

EXAMPLE LAYOUTS - FOOTING PLACEMENT AND CONNECTIONS

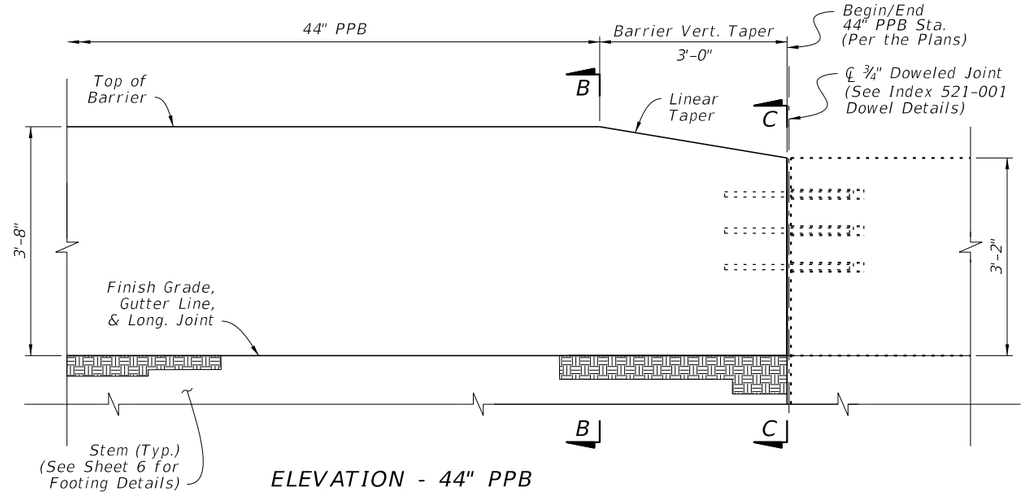

ELEVATION - 44" PPB
(See Sheet 4)

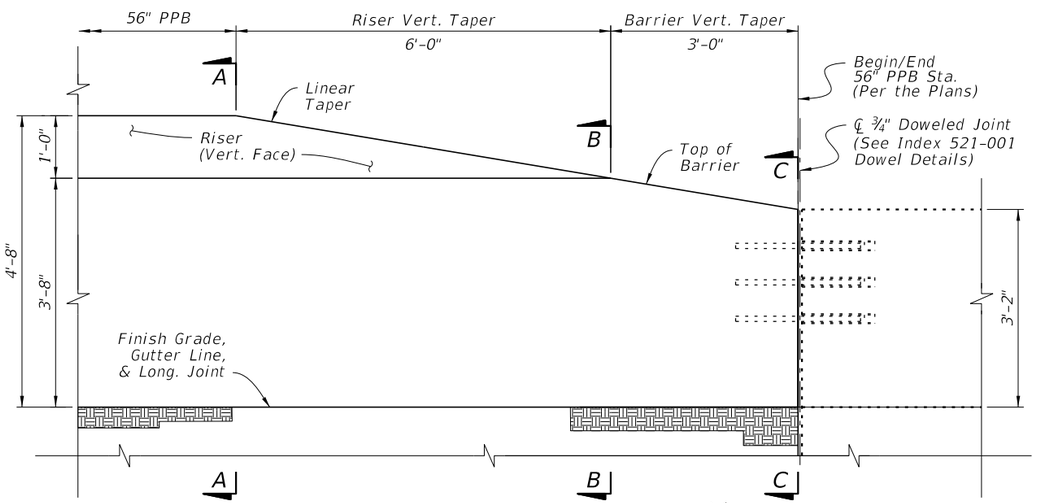

ELEVATION - 56" PPB
(See Sheet 4)

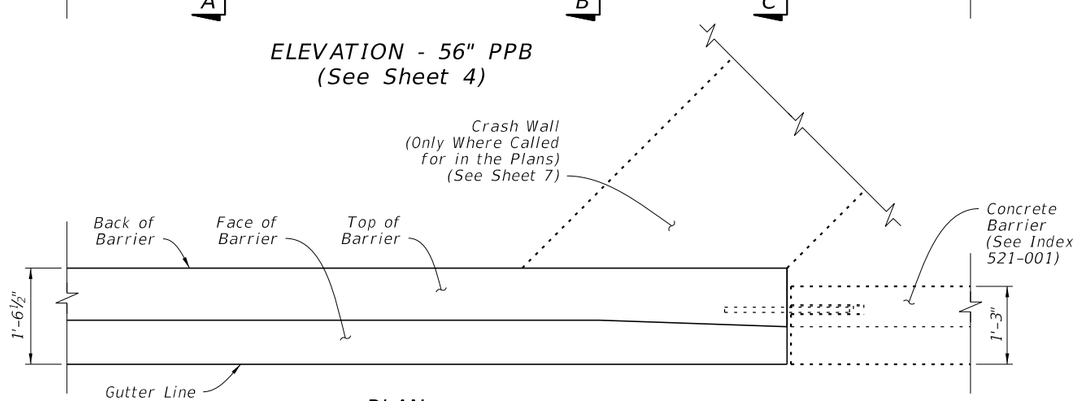

PLAN
(Footing Not Shown,
See Sheet 6 for Options)

CONNECTION TO
CONCRETE BARRIER

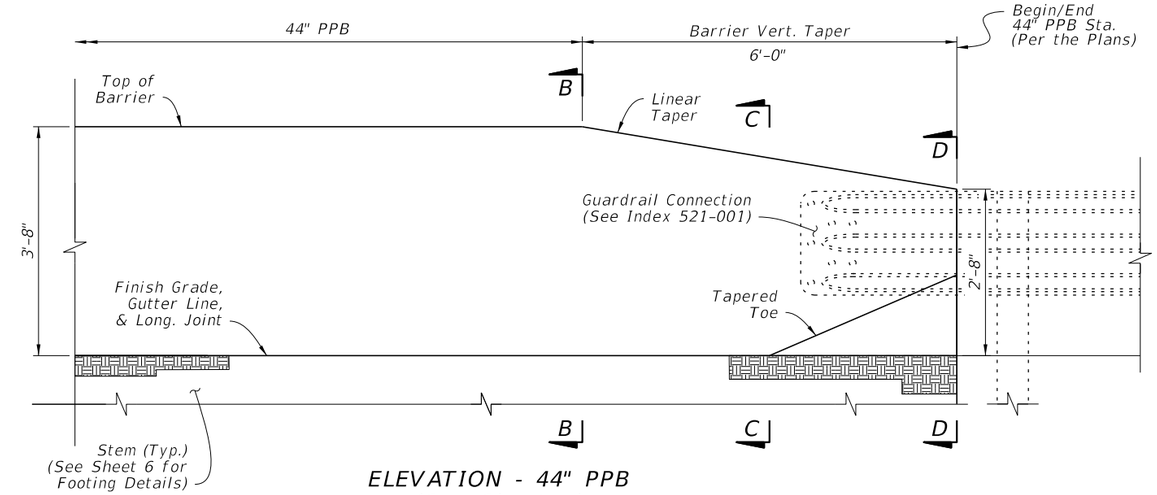

ELEVATION - 44" PPB
(See Sheet 5)

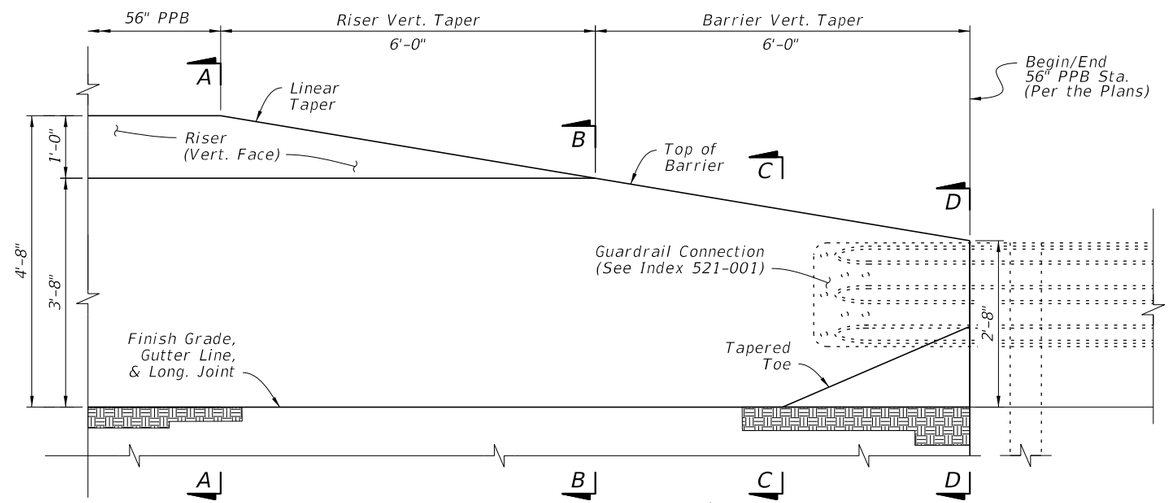

ELEVATION - 56" PPB
(See Sheet 5)

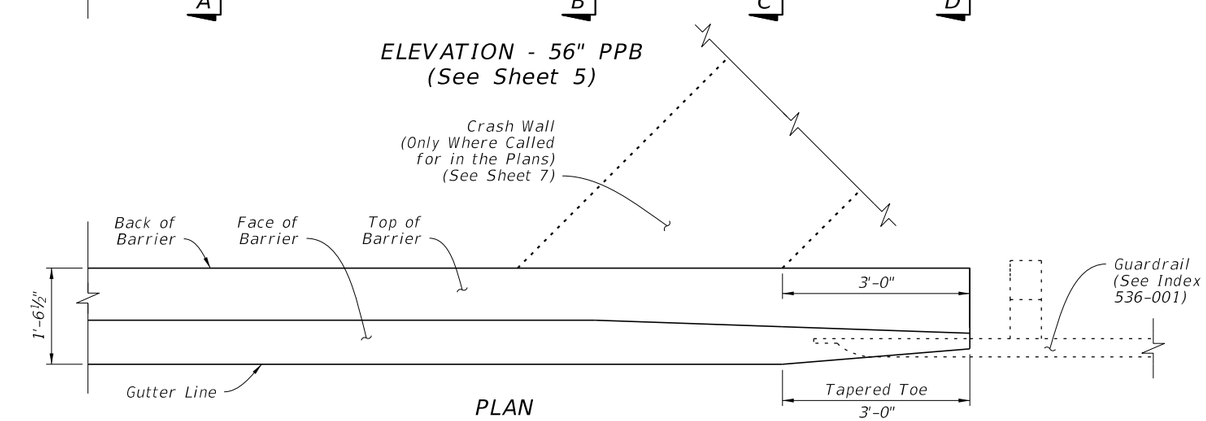

PLAN
(Footing Not Shown,
See Sheet 6 for Options)

CONNECTION TO
GUARDRAIL

9/18/2018 3:18:24 PM

LAST REVISION	REVISION	DESCRIPTION:				
11/01/17			FY 2019-20 STANDARD PLANS	PIER PROTECTION BARRIER	INDEX 521-002	SHEET 3 of 8

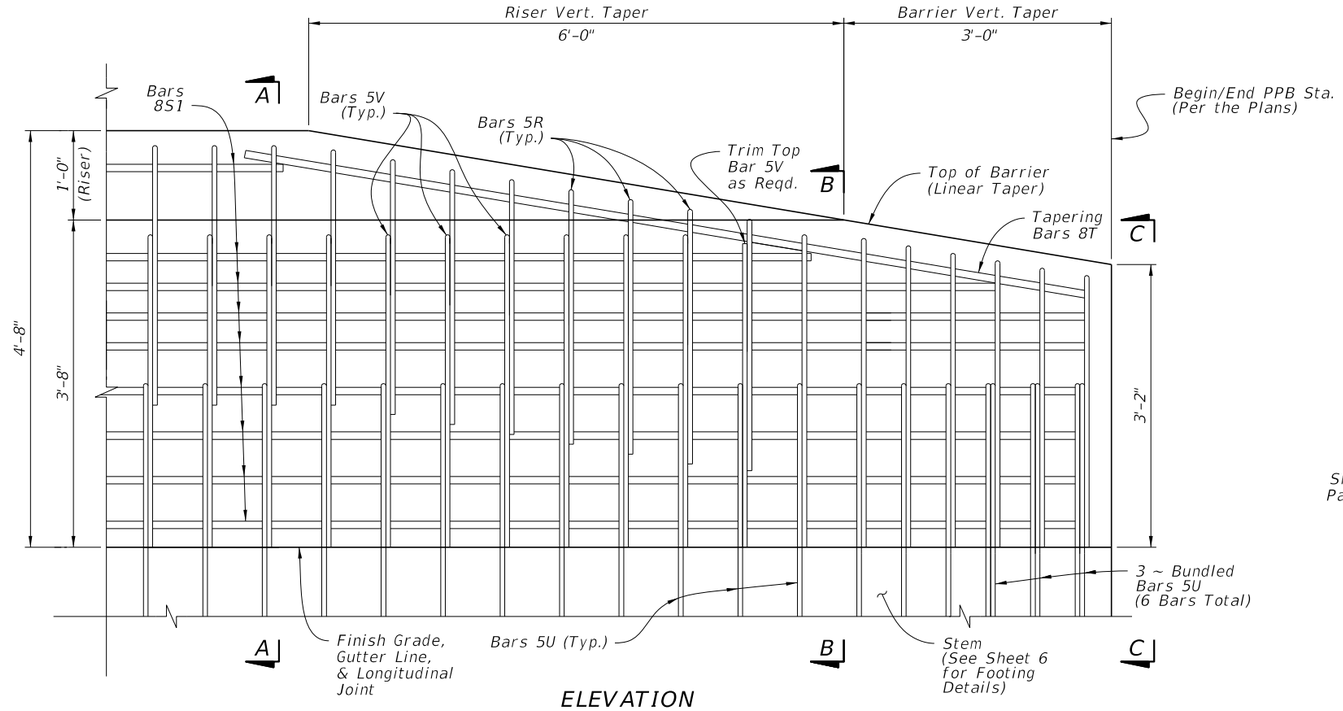

ELEVATION
(56" PPB Shown, 44" PPB Similar with 1'-0" Riser and Related Reinforcing Removed)

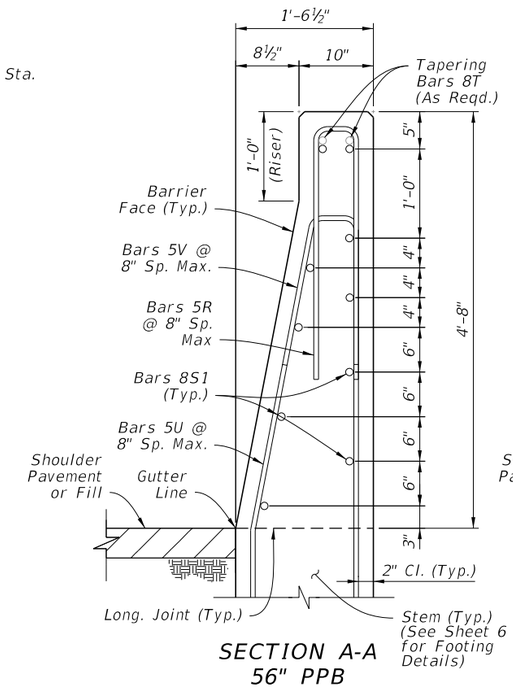

SECTION A-A
56" PPB

Concrete Qty. = 0.19 CY/FT (Above Gutter Line)
Steel Qty. = 47.7 LB/FT (Excluding Bars 5U & 8T)

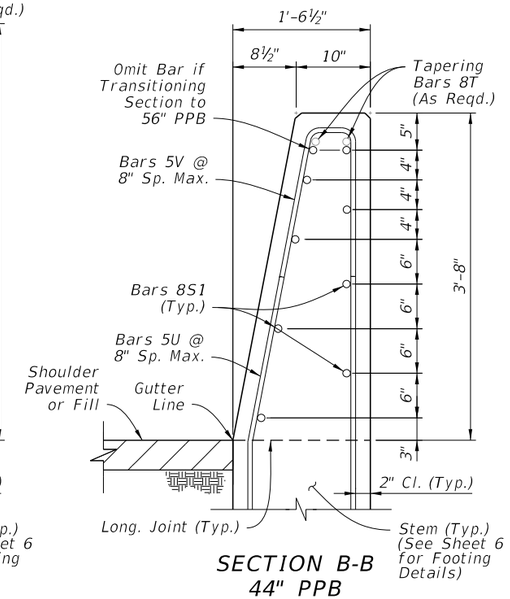

SECTION B-B
44" PPB

Concrete Qty. = 0.16 CY/FT (Above Gutter Line)
Steel Qty. = 35.7 LB/FT (Excluding Bars 5U & 8T)

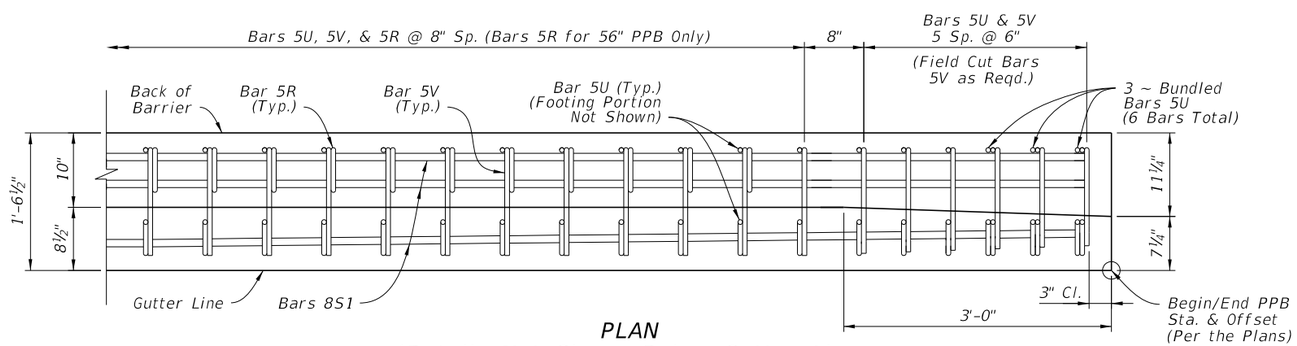

PLAN
(Details Not Shown Below Gutter Line, See Sheet 6 for Footing and Stem Details)
(Only Top & Bottom Longitudinal Steel Shown, See Section Views for All Steel Locations)

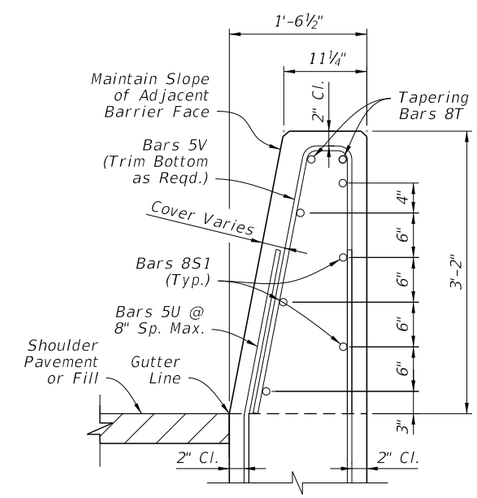

END VIEW C-C
(Connects to Adjacent Concrete Barrier, Aligned at Gutter Line)

NOTES:

1. GENERAL: Construct either the 56" PPB or the 44" PPB height as called for in the Plans. See Sheets 2 & 3 for additional plan and elevation details.

2. FOOTING OPTIONS: See Sheet 6 for the supporting stem and footing details.

BARRIER DETAILS - CONNECTION TO CONCRETE BARRIER

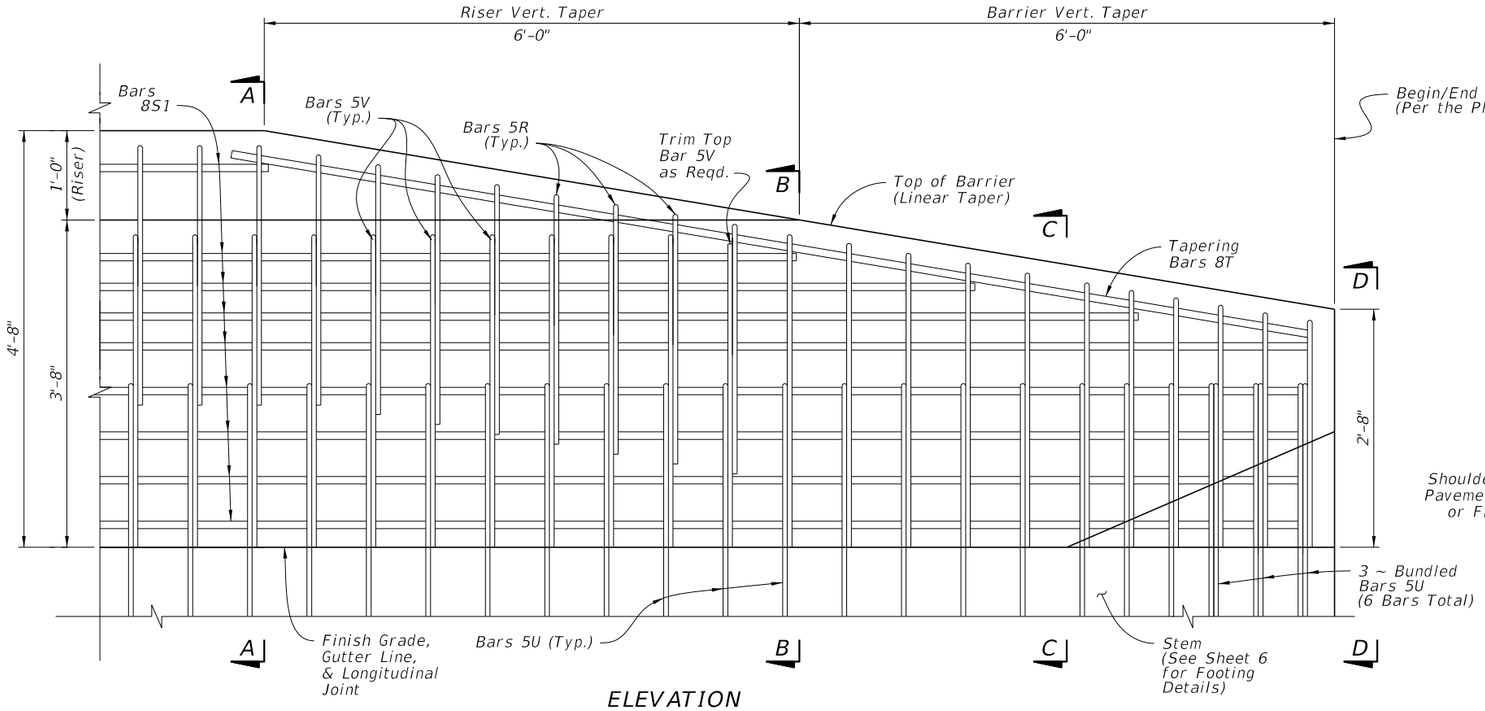

ELEVATION
(56" PPB Shown, 44" PPB Similar with 1'-0" Riser and Related Reinforcing Removed)

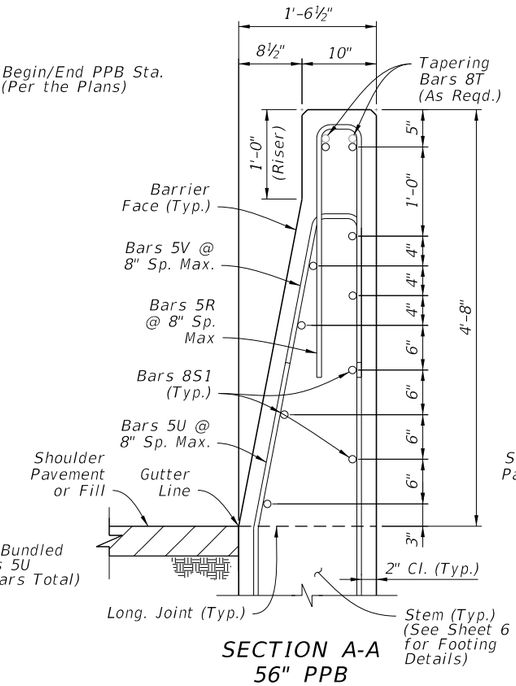

SECTION A-A
56" PPB

Concrete Qty. = 0.19 CY/FT (Above Gutter Line)
Steel Qty. = 47.7 LB/FT (Excluding Bars 5U & 8T)

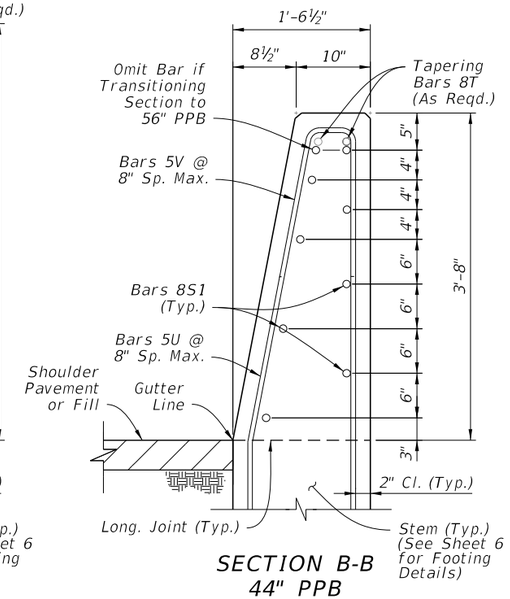

SECTION B-B
44" PPB

Concrete Qty. = 0.16 CY/FT (Above Gutter Line)
Steel Qty. = 35.7 LB/FT (Excluding Bars 5U & 8T)

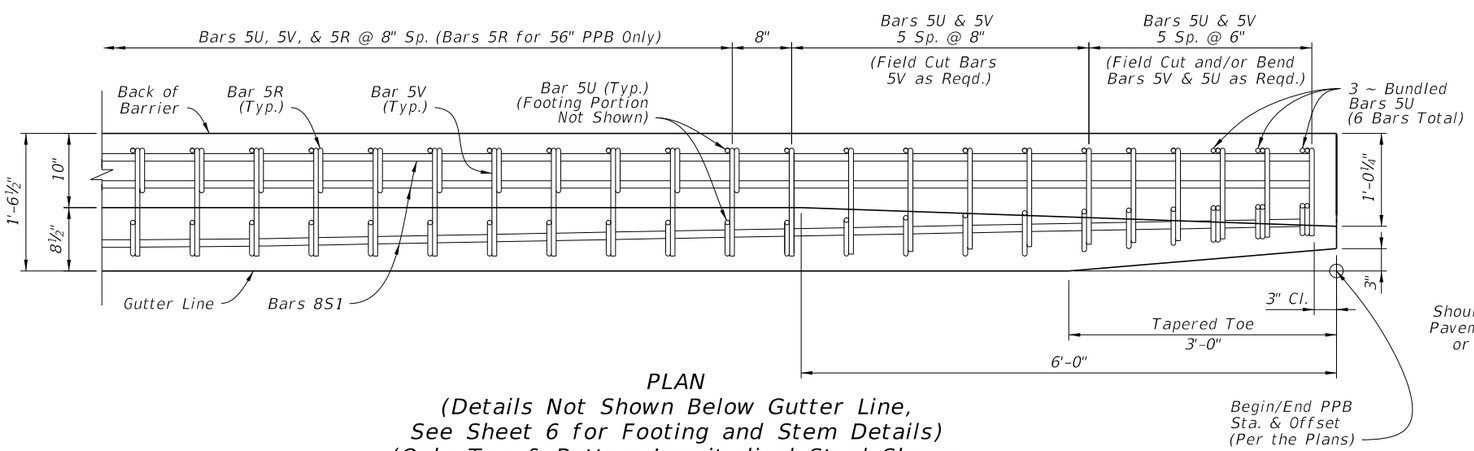

PLAN
(Details Not Shown Below Gutter Line, See Sheet 6 for Footing and Stem Details)
(Only Top & Bottom Longitudinal Steel Shown, See Section Views for All Steel Locations)

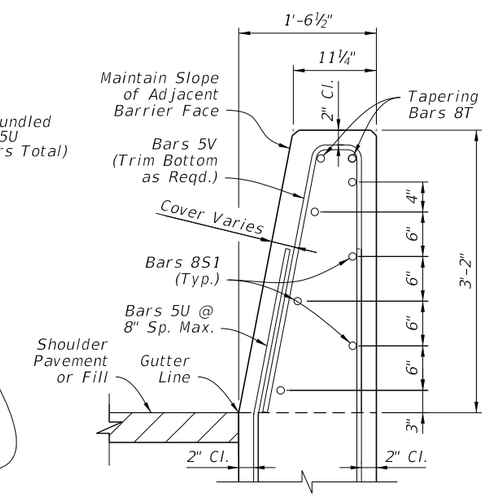

END VIEW C-C
(Begin Tapered Toe for Guardrail)

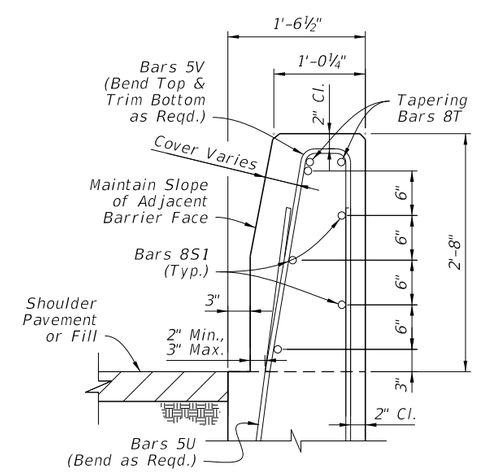

END VIEW D-D
(End Tapered Toe for Guardrail)

NOTES:

1. GENERAL: Construct either the 56" PPB or the 44" PPB height as called for in the Plans. See Sheets 2 & 3 for additional plan and elevation details.

2. FOOTING OPTIONS: See Sheet 6 for the supporting stem and footing details.

BARRIER DETAILS - CONNECTION TO GUARDRAIL

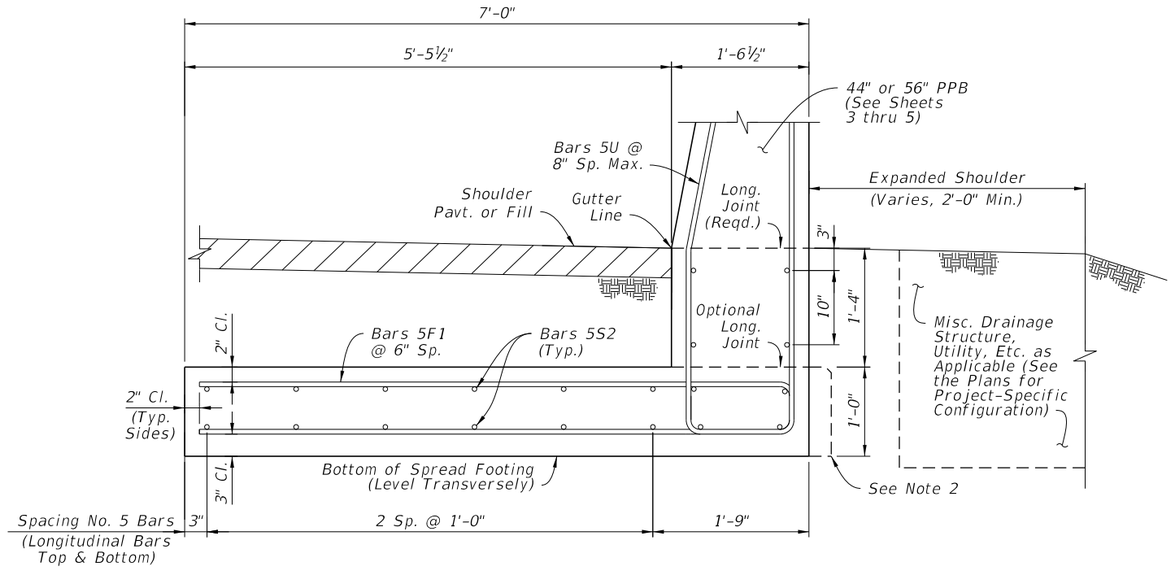

SECTION E-E
FRONT-FLUSH FOOTING OPTION

Concrete Qty. = 0.34 CY/FT (Below Gutter Line)
Steel Qty. = 63.5 LB/FT (Including Bars 5U)

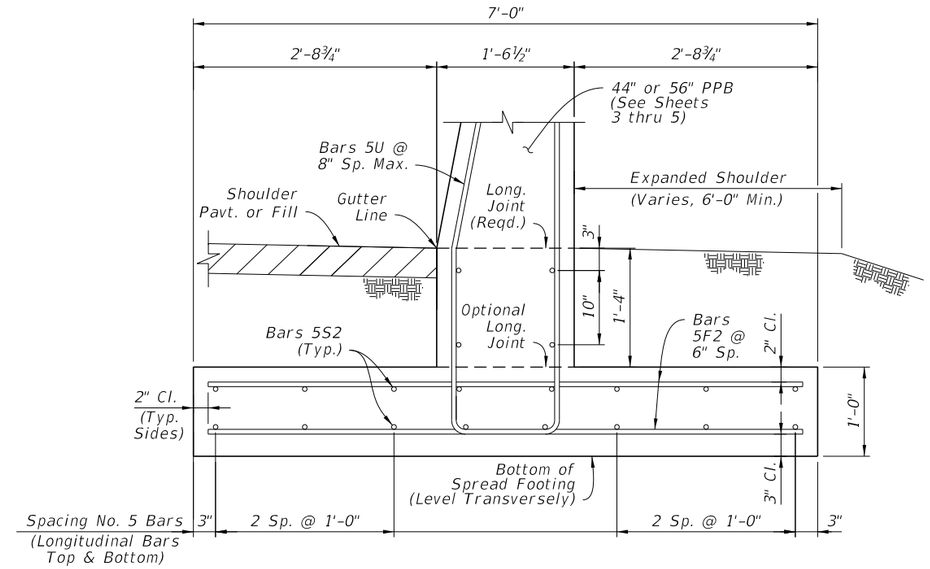

SECTION F-F
SYMMETRICAL FOOTING OPTION

Concrete Qty. = 0.34 CY/FT (Below Gutter Line)
Steel Qty. = 62.6 LB/FT (Including Bars 5U)

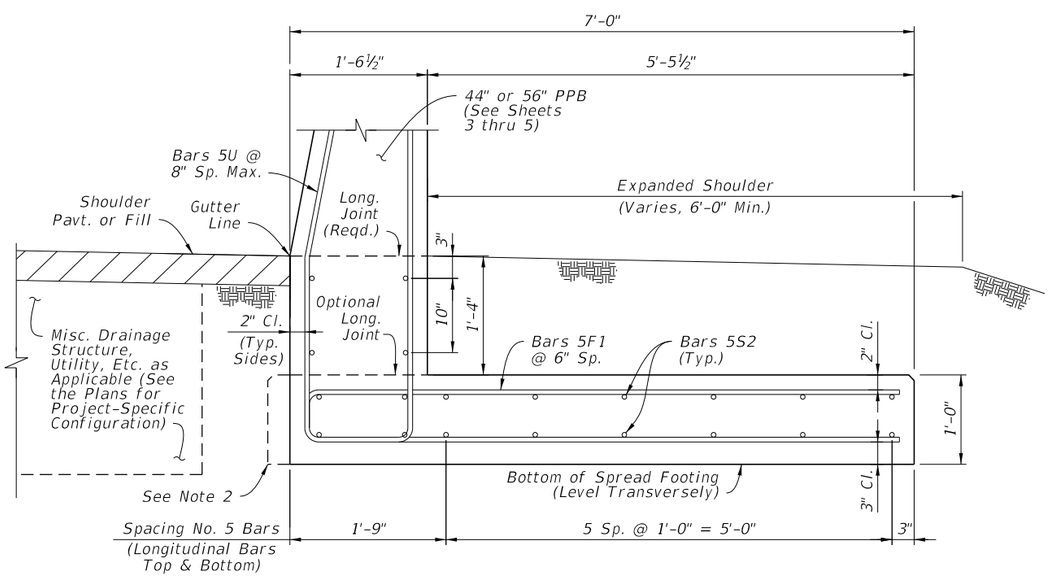

SECTION G-G
REAR-FLUSH FOOTING OPTION

Concrete Qty. = 0.34 CY/FT (Below Gutter Line)
Steel Qty. = 63.5 LB/FT (Including Bars 5U)

NOTES:

1. GENERAL: Install the footing options per project-specific requirements, as defined on Sheet 2 and specified per the Plans.

   Work with the supported 44" PPB and 56" PPB as shown on Sheets 3, 4, & 5.

2. OPTIONAL SLIP FORMING SUPPORT: The 1'-0" depth spread footing may be extended by 3" laterally beyond the face of the stem to provide support for a subsequent slip forming operation above. Do not adjust the steel reinforcement location for the additional concrete.

3. GUARDRAIL CONNECTION TAPERED TOE: For tapering the barrier as shown on Sheet 5, View D-D, bend Bars U away from the stem face as required. For this case, the cover requirement is variable for one side of the stem (only at the tapered toe locations).

BARRIER FOOTING OPTIONS

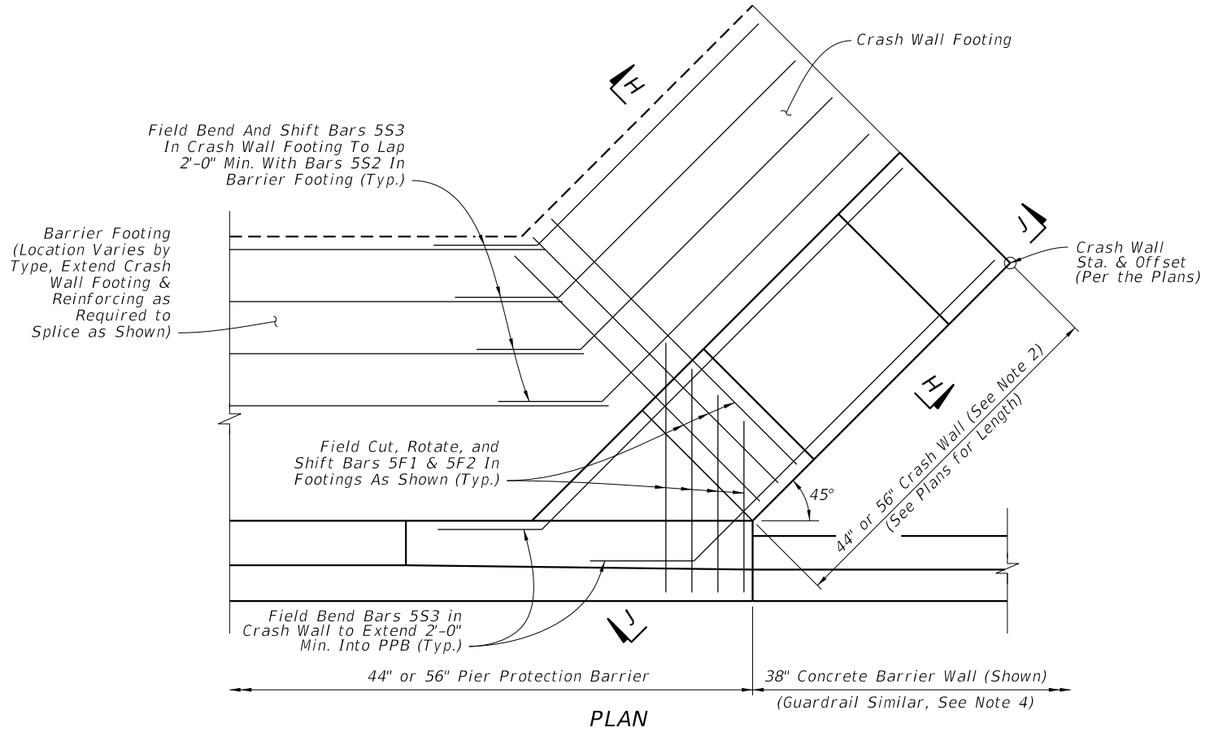

PLAN
(Schematic View - See Note 3)

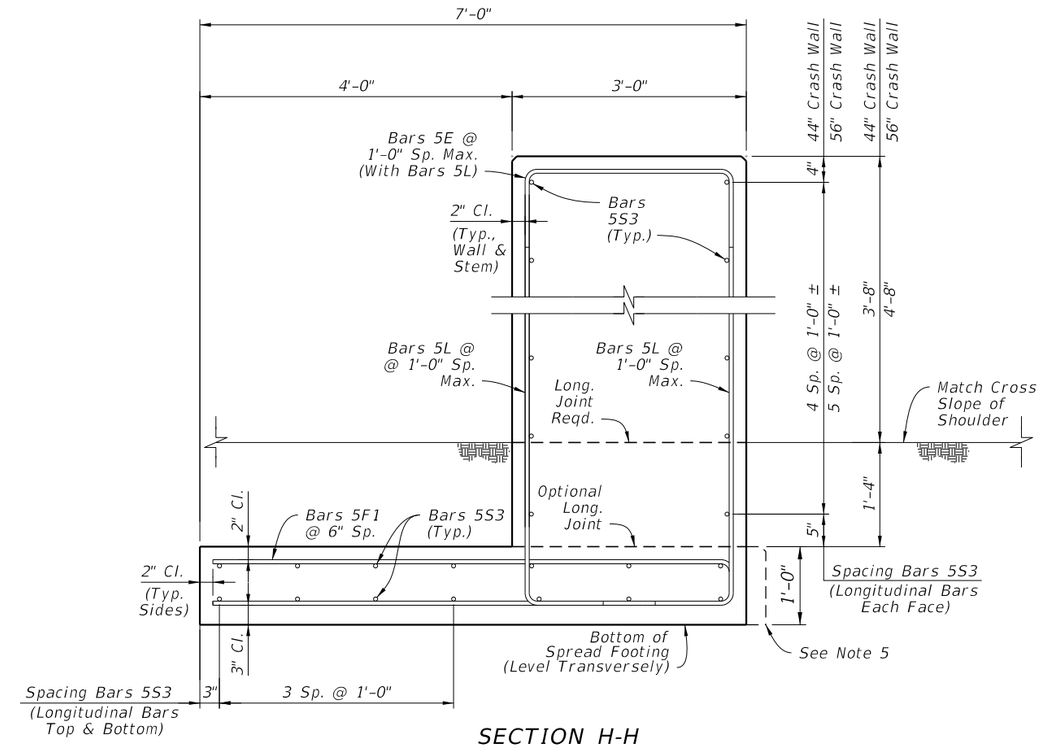

SECTION H-H
CRASH WALL

Concrete Qty. = 0.82 CY/FT (44" Crash Wall) or 0.93 CY/FT (56" Crash Wall)
Steel Qty. = 71.8 LB/FT (44" Crash Wall) or 76.0 LB/FT (56" Crash Wall)

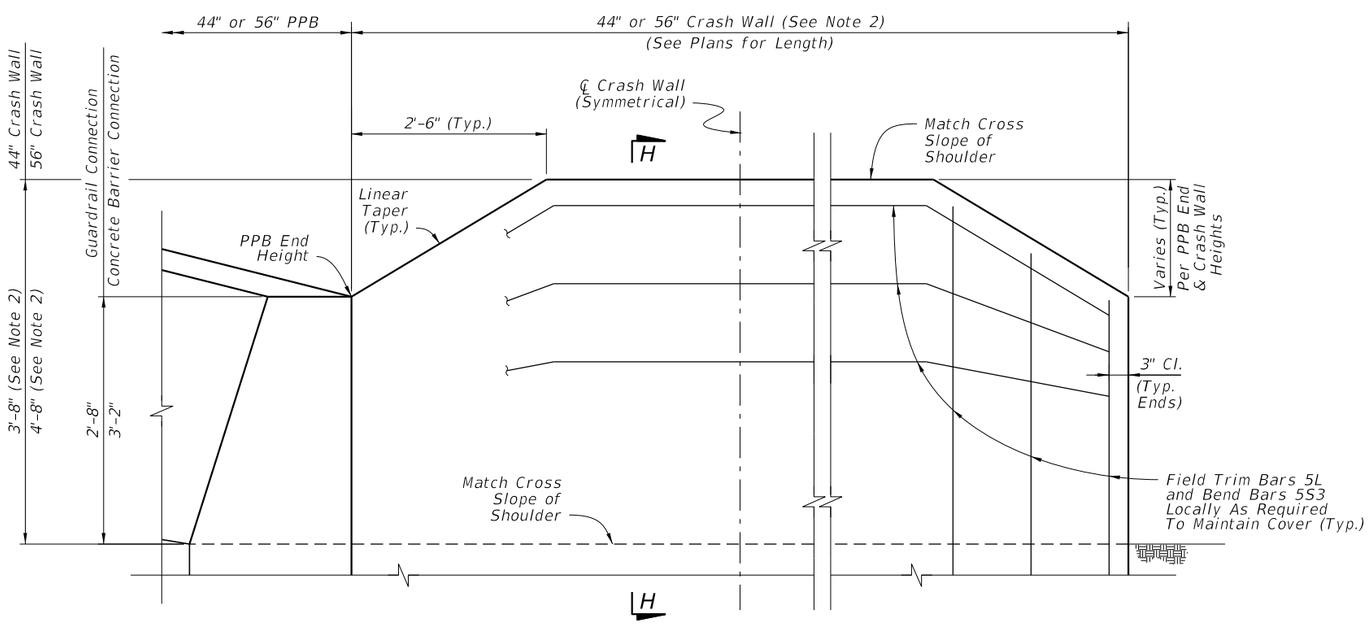

VIEW J-J CRASH WALL ELEVATION
(Schematic View - See Note 3)

NOTES:

1. GENERAL: Only where called for in the Plans, install the Crash Wall as a supplement for PPB. If applicable, see the Plans for the corresponding Station and Offset required.

   For additional layout details, see Sheets 2 & 3.

2. CRASH WALL HEIGHT: Install the Crash Wall at a height which matches the adjacent PPB (either 44" or 56").

3. SCHEMATIC VIEWS: Only partial reinforcing is shown in the Schematic Views to establish a trend while keeping clarity. For all reinforcing steel locations and spacing requirements, see Section H-H.

4. GUARDRAIL CONNECTIONS: To facilitate guardrail connections, shift the Crash Wall 3 feet from the end of the PPB as shown on Sheets 2 & 3.

5. OPTIONAL SLIP FORMING SUPPORT: The 1'-0" depth spread footing may be extended by 3" laterally beyond the face of the wall to provide support for a subsequent slip forming operation above. Do not adjust the steel reinforcement location for the additional concrete.

CRASH WALL DETAILS

9/18/2018 3:18:26 PM

LAST REVISION	REVISION	DESCRIPTION:			INDEX	SHEET
11/01/17			FDOT FY 2019-20 STANDARD PLANS	PIER PROTECTION BARRIER	521-002	7 of 8

BILL OF REINFORCING STEEL		
MARK	SIZE	LENGTH
V	5	7'-5"
U	5	8'-11"
R	5	6'-0"
F1	5	13'-9"
F2	5	Varies (Straight)
L	5	6'-5" / 7'-5"
E	5	4'-6"
S1	8	Varies (Straight)
S2, S3	5	Varies (Straight)

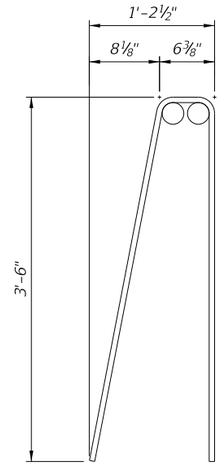

BARS 5V

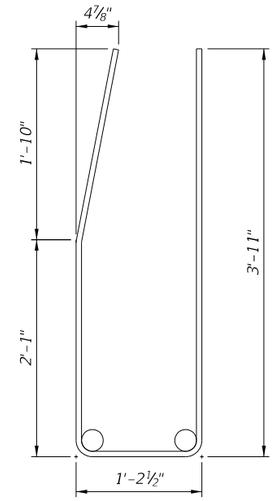

BARS 5U

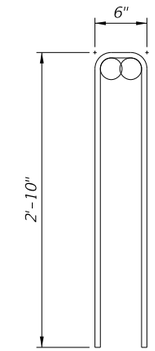

BARS 5R

NOTES:

1. Work with the Standard Bar Bending Details per Index 415-001.
2. All bar dimensions in the bending diagrams are out to out.

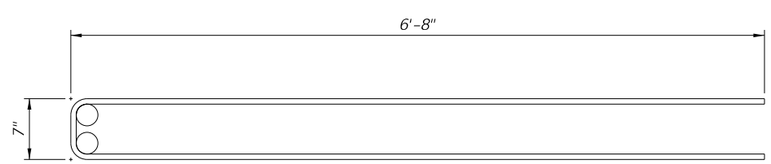

BARS 5F1

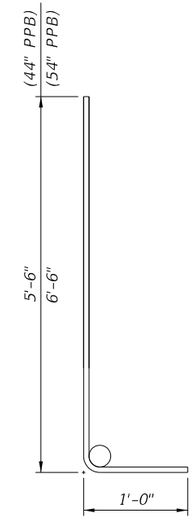

BARS 5L

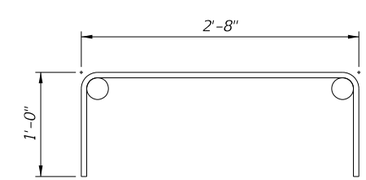

BARS 5E

BAR BENDING DIAGRAMS

9/18/2018 3:18:27 PM

LAST REVISION	REVISION	DESCRIPTION:			INDEX	SHEET
11/01/17			FY 2019-20 STANDARD PLANS	PIER PROTECTION BARRIER	521-002	8 of 8