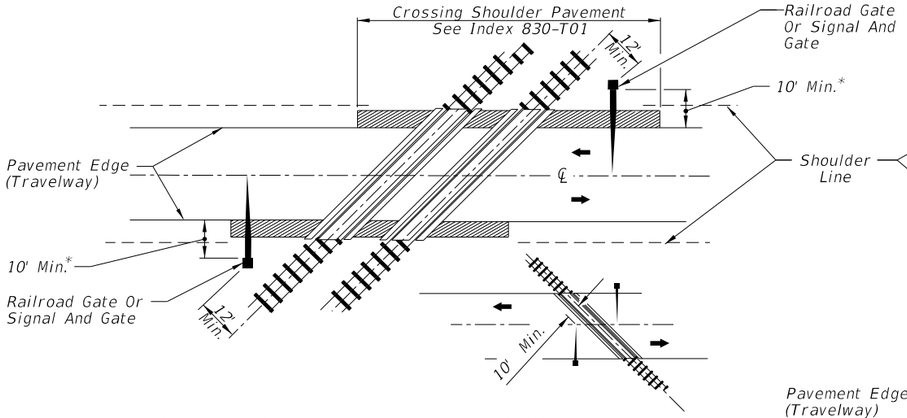

SIGNAL PLACEMENT AT RAILROAD CROSSING

(2 - LANE DESIGN)

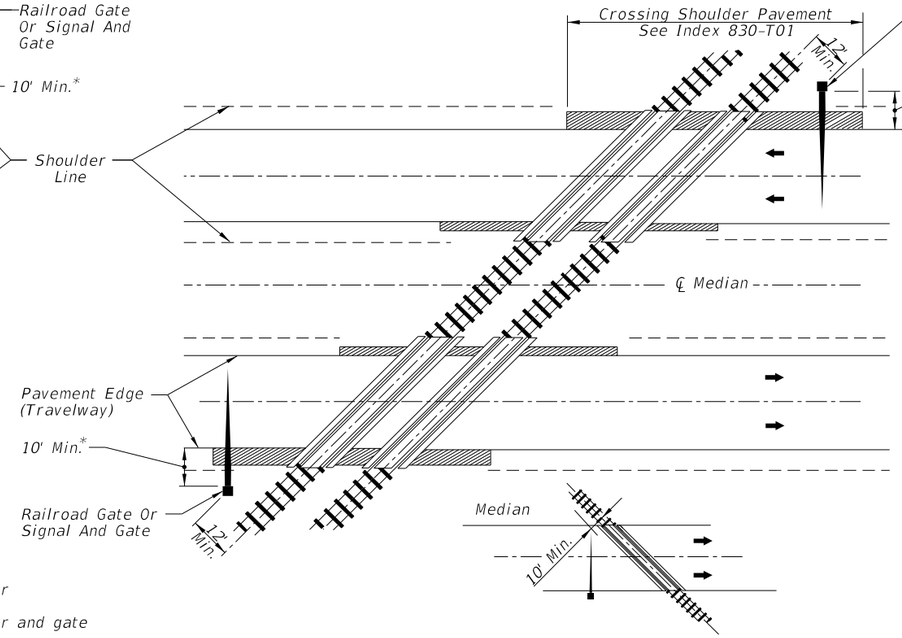

SIGNAL PLACEMENT AT RAILROAD CROSSING

(4 - LANE DESIGN)

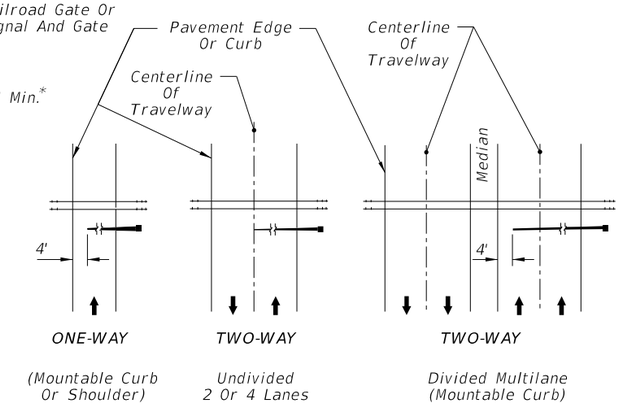

Note:
Arrows denote direction of travel not pavement markings.
Gate Length Requirements See Note 5 Sheet 3.

FIGURE 1

GENERAL NOTES:

1. No guardrail is proposed for signals; however, some form of impact attenuation device may be specified for certain locations.
2. Advance flasher to be installed when and if called for in plans or specifications.
3. Top of foundation shall be no higher than 4" above finished shoulder grade.
4. Type of traffic control device
   - I Flashing warning devices
   - II Flashing warning devices with cantilever
   - III Flashing warning devices with gate
   - IV Flashing warning devices with cantilever and gate
   - V Gate
5. Class of traffic control devices (Not Shown)
   - I 2 Quadrant flashing warning devices-one track
   - II 2 Quadrant flashing warning devices-multiple tracks
   - III 2 Quadrant flashing warning devices and gates-one track
   - IV 2 Quadrant flashing warning devices and gates-multiple tracks
   - V 3-4 Quadrant flashing warning devices and gates-one track
   - VI 2-4 Quadrant flashing warning devices and gates-multiple tracks

Note:
Two separate foundations may be required (one for signals, one for gate), depending on type of equipment used.

* When 10' is deemed impractical the control device can be located as close as 2' from the edge of a paved shoulder but not less than 6' from the edge of the near traffic lane.

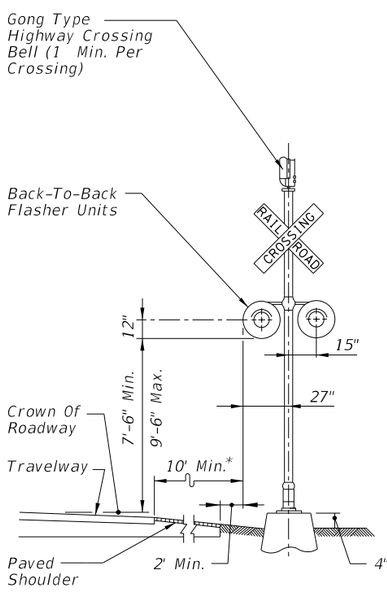

TYPE I

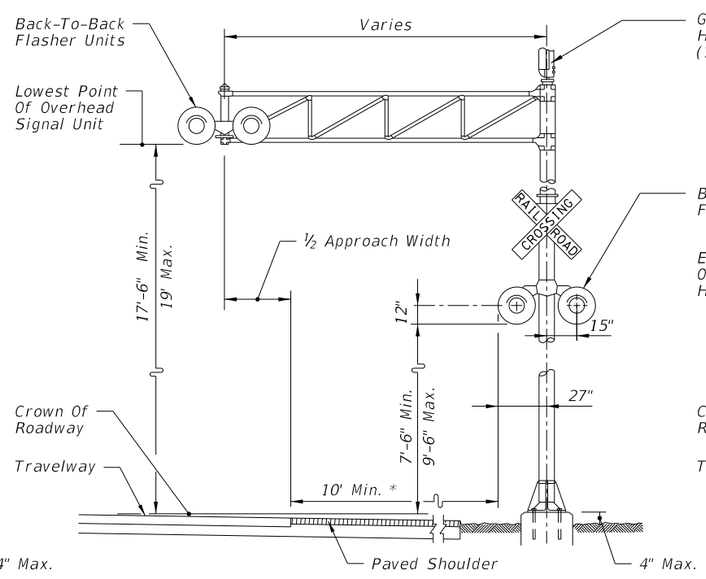

TYPE II

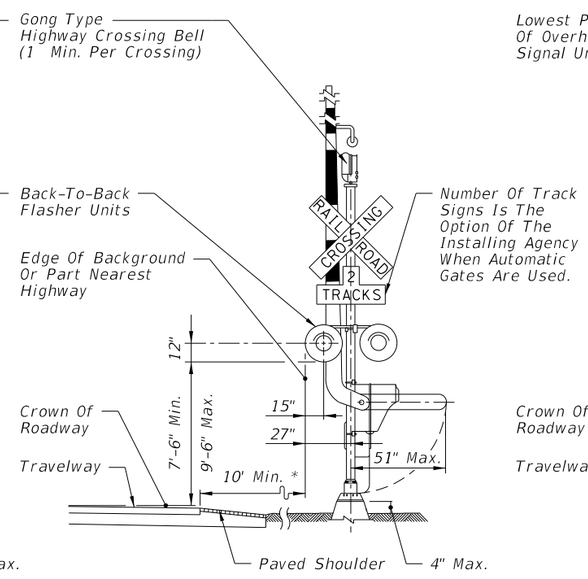

TYPE III AND TYPE V

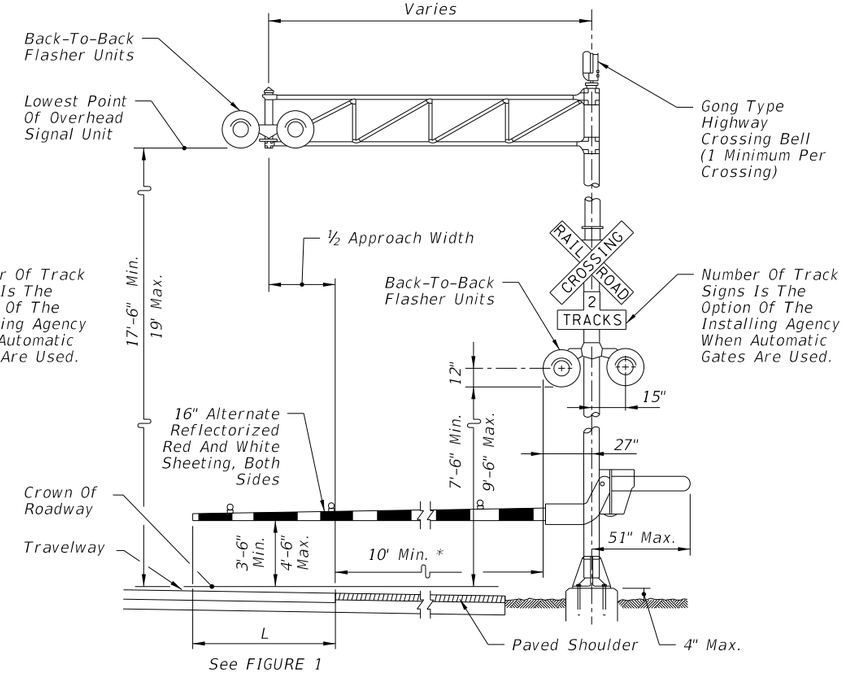

TYPE IV AND TYPE VI

TRAFFIC CONTROL DEVICES FOR FLUSH SHOULDER ROADWAY

LAST REVISION	REVISION	DESCRIPTION:			INDEX	SHEET
11/01/17			FY 2019-20 STANDARD PLANS	RAILROAD GRADE CROSSING TRAFFIC CONTROL DEVICES	509-070	1 of 4

10/18/2018 11:04:03 AM

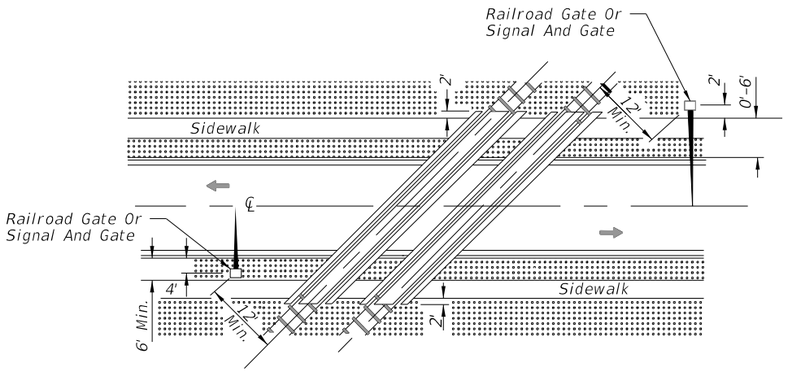

ACUTE ANGLE (AND RIGHT ANGLE)

SIGNAL PLACEMENT AT RAILROAD CROSSING

(2 LANES, CURB & GUTTER)

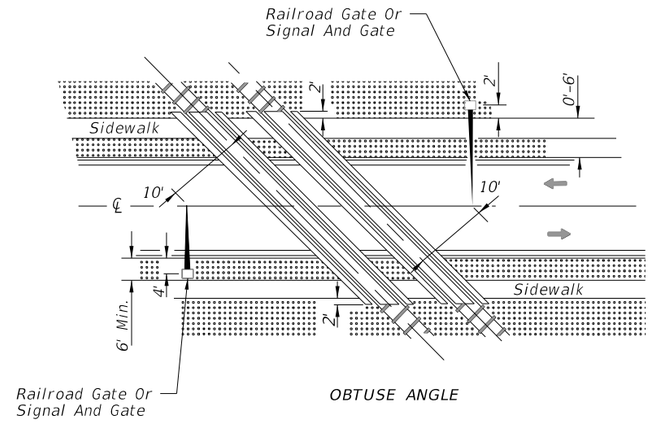

OBTUSE ANGLE

SIGNAL PLACEMENT AT RAILROAD CROSSING

(2 LANES, CURB & GUTTER)

NOTES:

1. The location of flashing warning devices and stop lines shall be established based on future (or present) installation of gate with appropriate track clearances.
2. Where plans call for railroad traffic control devices to be installed in curbed medians, the minimum median width shall be 12'-6".
3. Location of railroad traffic control device is based on the distance available between face of curb & sidewalk. 0' to 6' - Locate device outside sidewalk. Over 6' - Locate device between face of curb and sidewalk.
4. Stop line to be perpendicular to edge of roadway, approx. 15' from nearest rail; or 8' from and parallel to gate when present.
5. When a cantilevered-arm flashing warning device is used, the minimum vertical clearance shall be 17'-6" from above the Crown of Roadway to the Lowest Point of the Overhead Signal Unit.

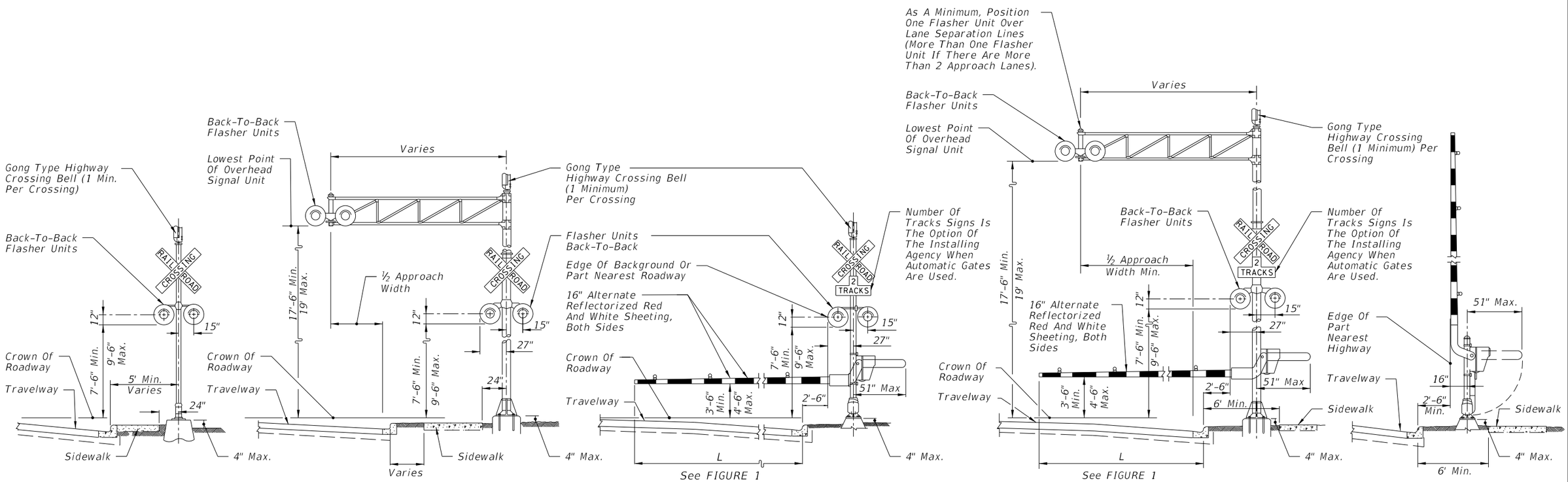

TRAFFIC CONTROL DEVICES FOR CURBED ROADWAY

LAST REVISION	REVISION	DESCRIPTION:				INDEX	SHEET
11/01/17			FDOT	FY 2019-20 STANDARD PLANS	RAILROAD GRADE CROSSING TRAFFIC CONTROL DEVICES	509-070	2 of 4

10/18/2018 11:04:04 AM

NOTES:

1. Place an additional W10-1 sign where intersections occur between the R/R pavement message and the tracks.
2. Place FTP-61-06 or FTP-62-06 sign 100' in advance of crossing for urban conditions and 300' in advance of crossing for rural conditions. See Index 700-102 for sign details.

Design Speed (mph)	Distance "A" (ft)
60	400
55	325
50	250
45	175
40	125
35	100
URBAN	85 Min.

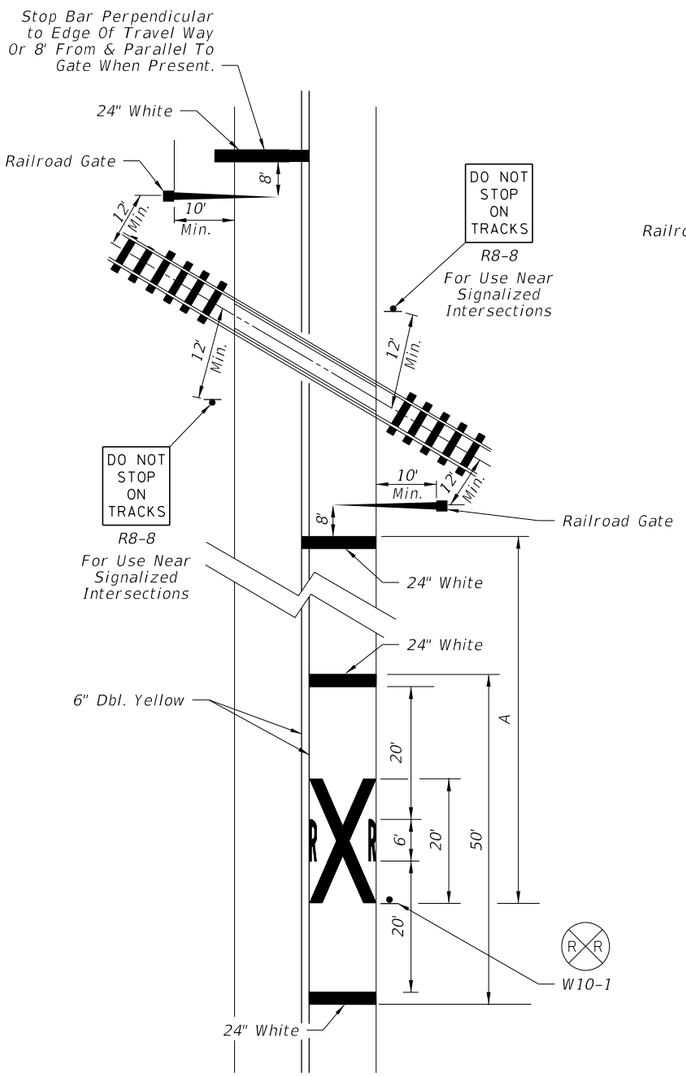

RAILROAD CROSSING AT TWO-LANE ROADWAY

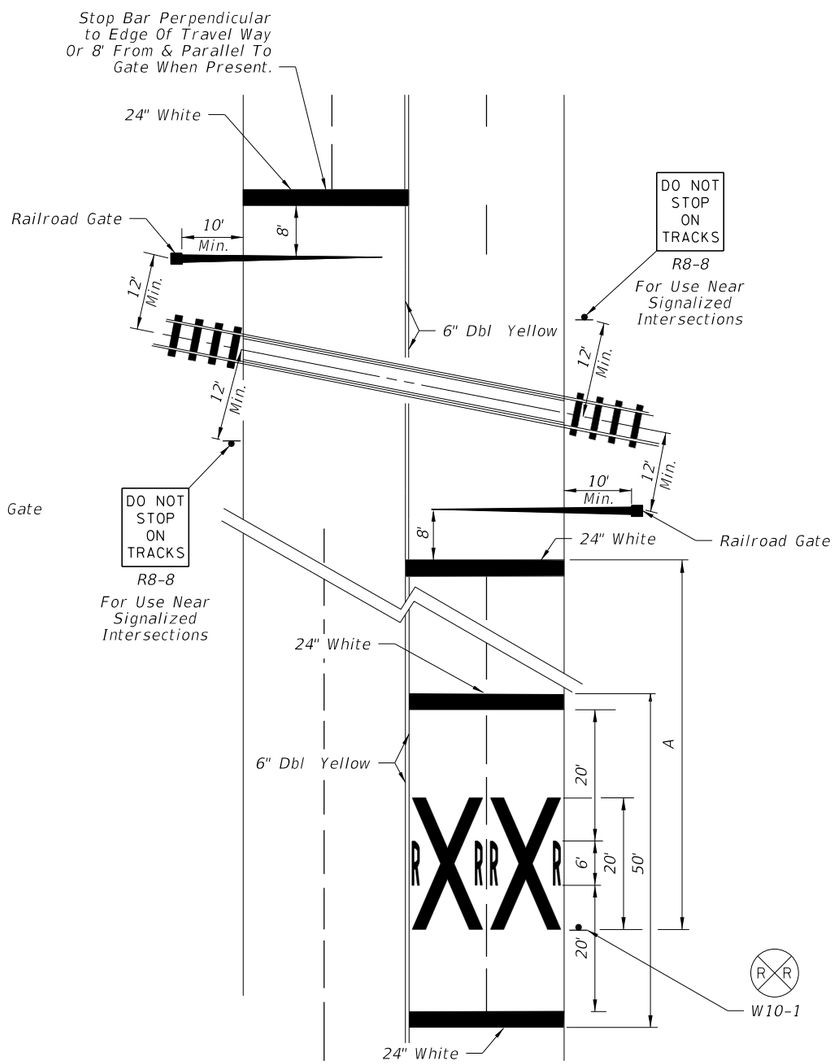

RAILROAD CROSSING AT MULTILANE ROADWAY

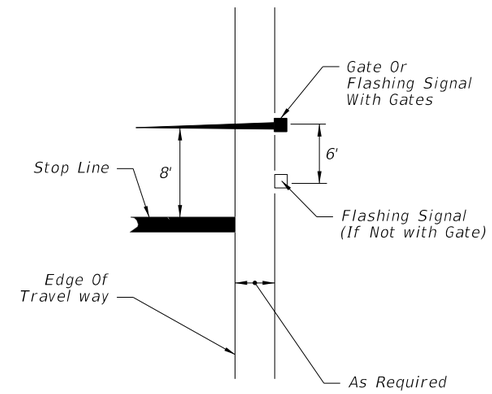

RELATIVE LOCATION OF CROSSING TRAFFIC CONTROL DEVICES

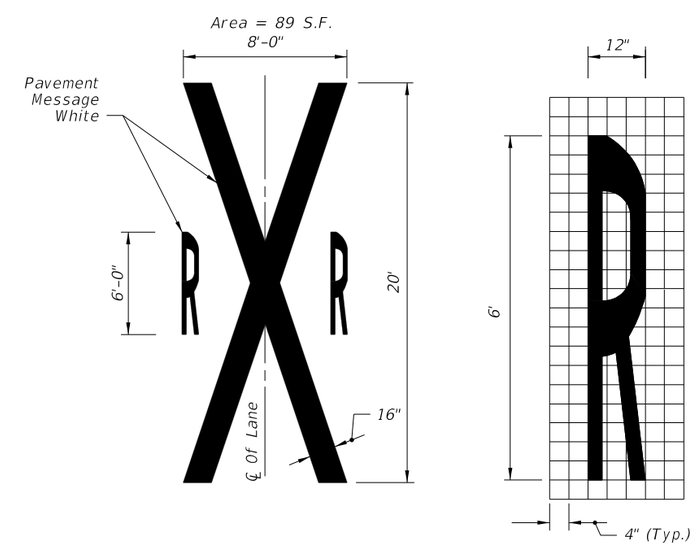

RAILROAD CROSSING PAVEMENT MESSAGE

LAST REVISION	REVISION	DESCRIPTION:			INDEX	SHEET
11/01/18			FY 2019-20 STANDARD PLANS	RAILROAD GRADE CROSSING TRAFFIC CONTROL DEVICES	509-070	3 of 4

10/18/2018 11:04:04 AM

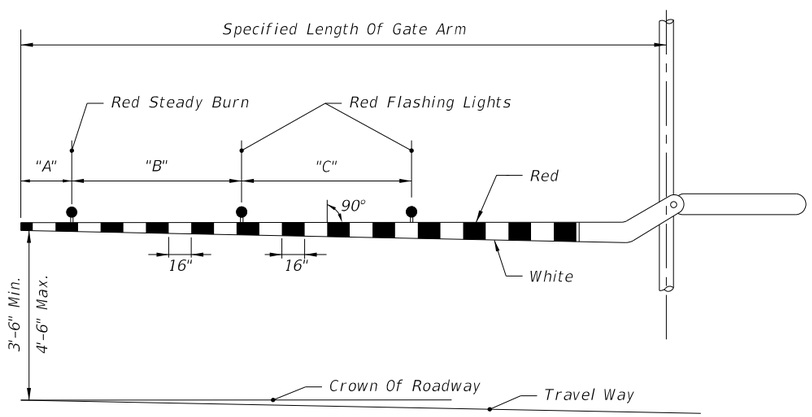

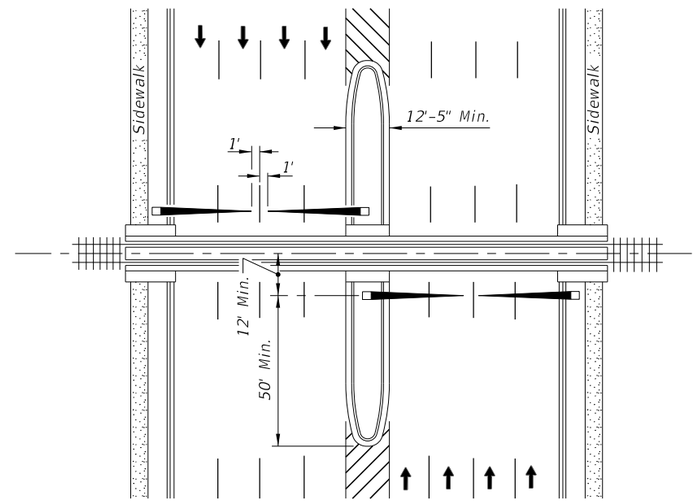

PLAN

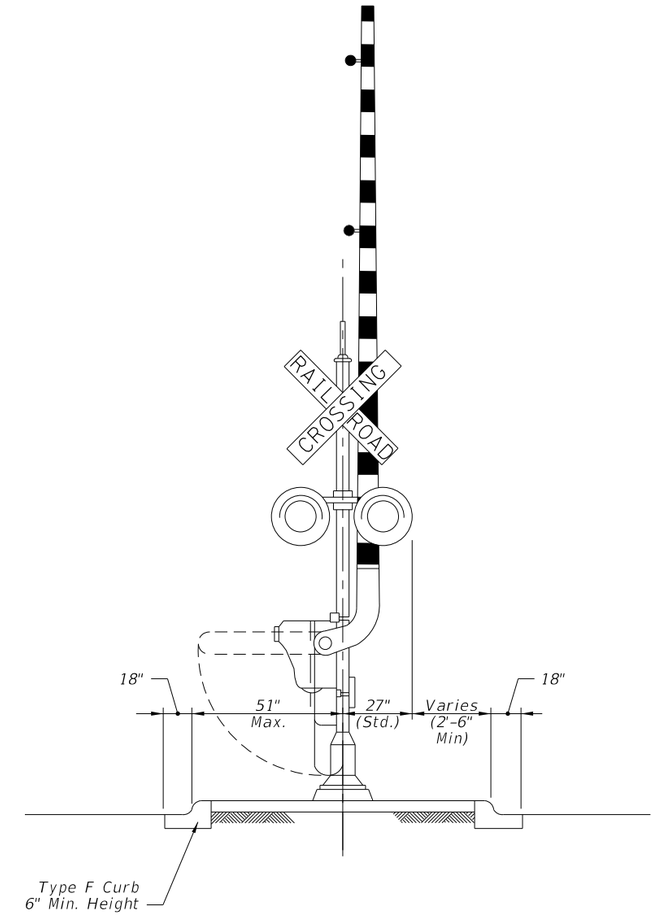

MEDIAN SECTION AT SIGNAL GATES

RAILROAD GATE ARM LIGHT SPACING

Specified Length Of Gate Arm	Dimension "A"	Dimension "B"	Dimension "C"
14 Ft.	6"	36"	5'
15 Ft.	18"	36"	5'
16-17 Ft.	24"	36"	5'
18-19 Ft.	28"	41"	5'
20-23 Ft.	28"	4'	5'
24-28 Ft.	28"	5'	5'
29-31 Ft.	36"	6'	6'
32-34 Ft.	36"	7'	7'
35-37 Ft.	36"	9'	9'
38 And Over	36"	10'	10'

NOTE:
For additional information see the "Manual On Uniform Traffic Control Devices", Part 8; The "Traffic Control Handbook" , Part VIII; and AASHTO "A Policy On Geometric Design Of Streets And Highways".

MEDIAN SIGNAL GATES FOR

MULTILANE UNDIVIDED URBAN SECTIONS

(THREE OR MORE DRIVING LANES IN ONE DIRECTION, 45 MPH OR LESS)

10/18/2018 11:04:05 AM