CROSS REFERENCES:
For Dimensions L and X see Sheet
Pile Wall Data Table in Structures Plans.

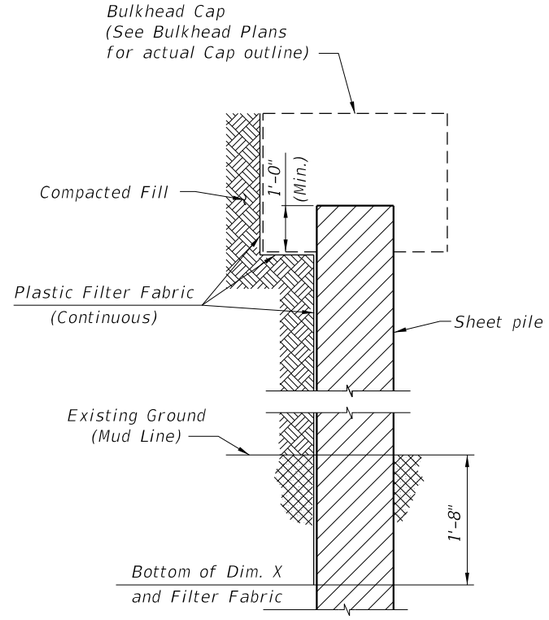

SECTION THRU BULKHEAD

(Showing Plastic Filter Fabric)

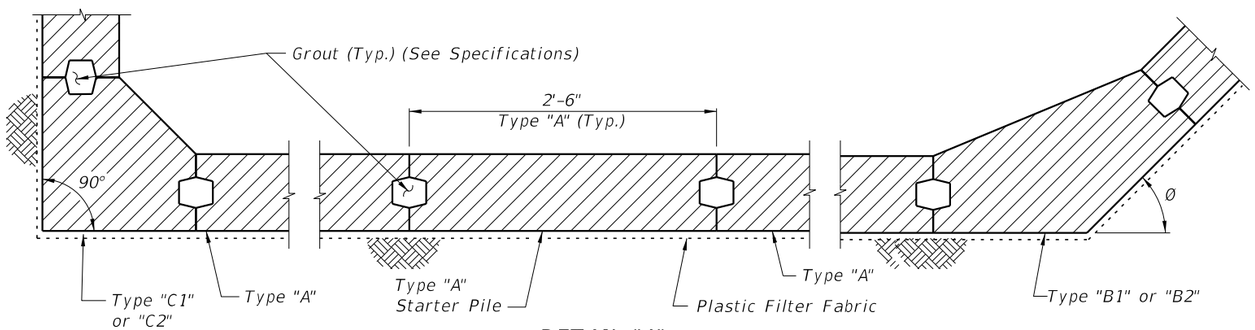

DETAIL "A"

(Cap and Anchoring System Not Shown)
(Section Taken Above Dimension X)

NOTE: Detail "A" shows a Part-Plan View of an assumed bulkhead.
See Bulkhead plans for actual Plan View.

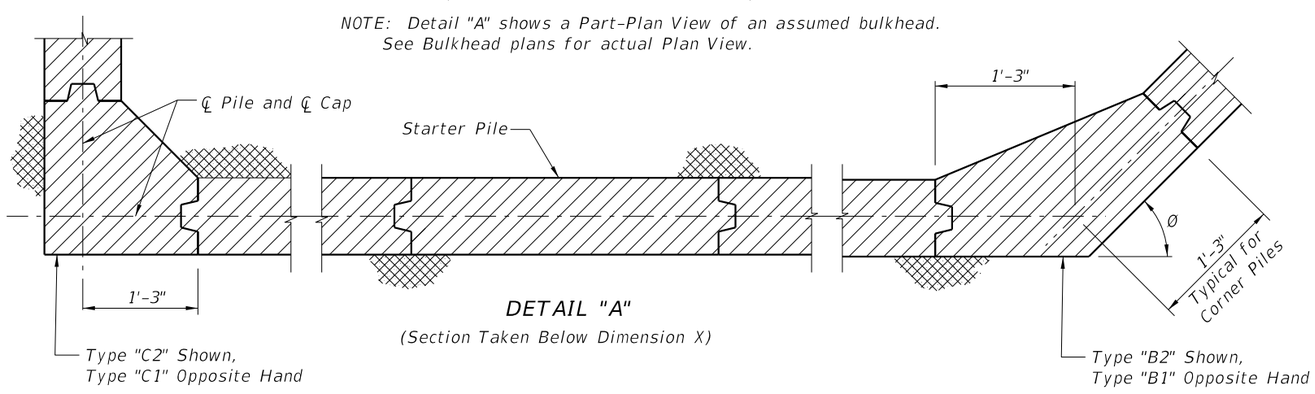

DETAIL "A"

(Section Taken Below Dimension X)

CFRP/GFRP SHEET PILE DESIGN CRITERIA AND NOTES

DESCRIPTION:
This Index includes details for six types of piles with two thicknesses.
Type "A" is prestressed concrete construction with CFRP or HSSS strands.
Types "B1", "B2", "C1" and "C2" piles (corner piles) are reinforced concrete construction.
Manufacture, cure and install Sheet Piles in accordance with the requirements of the contract documents.

MATERIALS: (for materials not listed refer to the Specifications)

CONCRETE

Class:	V (Special)
Unit weight:	145 pcf
Modulus of Elasticity:	Based on the use of Florida limerock aggregate concrete

REINFORCING BARS
Glass Fiber Reinforced Polymer (GFRP) bars meeting the requirements of Specification Section 932.

PRESTRESSING STRAND
Stainless Steel: Prestressing steel shall be seven-wire HSSS, UNS S32205 (Type 2205) or UNS S31803 strand, meeting the requirements of Specification Section 933.
Carbon FRP: Prestressing strand shall be CFRP strand, meeting the requirements of Specification Section 933.

DESIGN PARAMETERS:

Type "A"

Concrete Compressive Strength at release of prestressing:	4000 psi minimum
Uniform compression after prestressing losses:	700 psi minimum
Pick-up, Storage and Transportation:	450 psi tension with 1.5 times pile self weight for single-point pick-up at f'c ≥ 6000 psi

Types "B1", "B2", "C1" & "C2"
Pick-up, Storage and Transportation: Minimum compressive strength f'ci ≥ 4000 psi required for two-point pick-up; f'c ≥ 6000 psi for single-point pick-up.

PLASTIC FILTER FABRIC:
The plastic filter fabric shall extend to the bottom of the "X" dimension.

PILE PICK-UP AND HANDLING:
Two-point pick-up for lifting out of forms & two-point support for storage & transportation.
Single-point pick-up for installation only.

PILE FIT-UP:
The 2'-6" Sheet Pile dimension is nominal. This dimension may be shortened by the Manufacturer up to ½" to allow for Sheet Pile fit-up in its final position. Minimum Sheet Pile width is 2'-5½". No changes shall be made to the tongues or grooves.

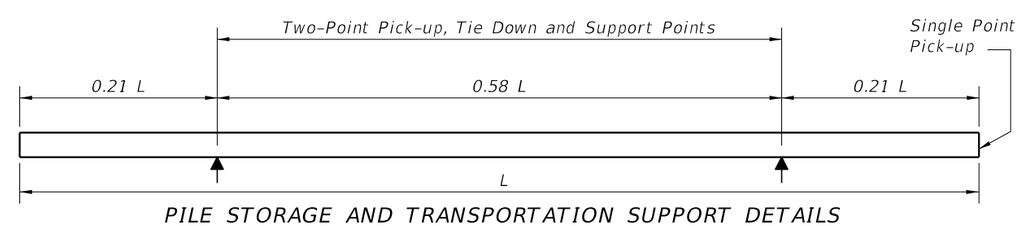

PILE STORAGE AND TRANSPORTATION SUPPORT DETAILS

NOTES AND DETAILS

10/23/2018 12:48:13 PM

LAST REVISION	REVISION	DESCRIPTION:	FDOT	FY 2019-20 STANDARD PLANS	PRECAST CONCRETE SHEET PILE WALL (CFRP/GFRP & HSSS/GFRP)	INDEX	SHEET
11/01/16						455-440	1 of 4

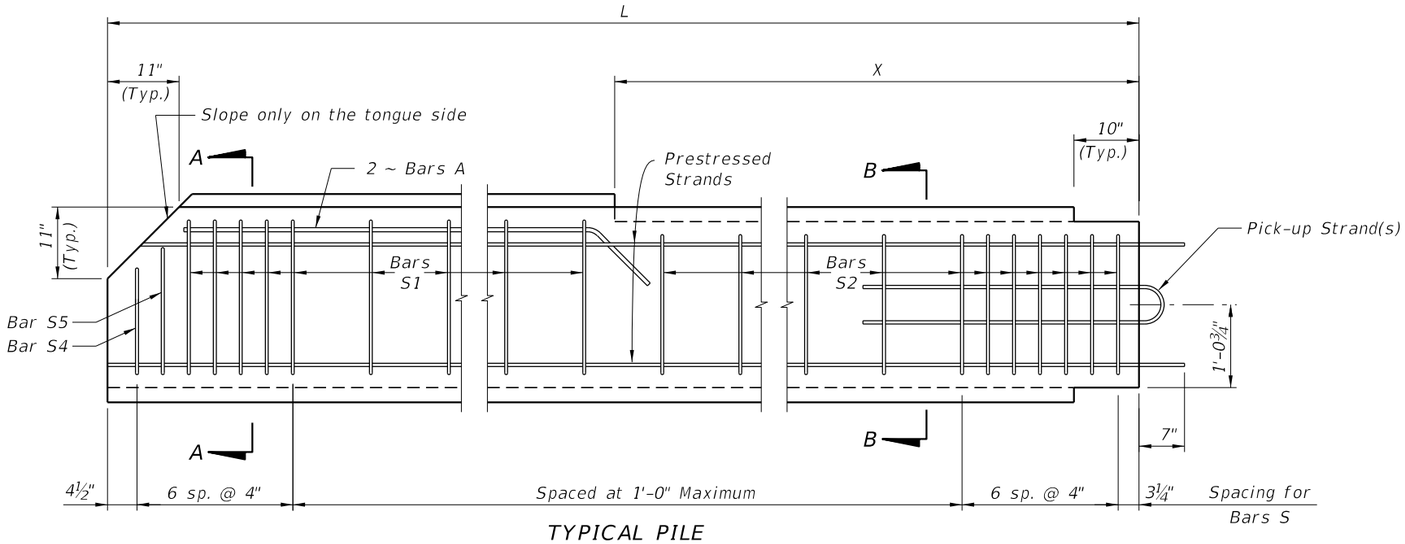

TYPICAL PILE

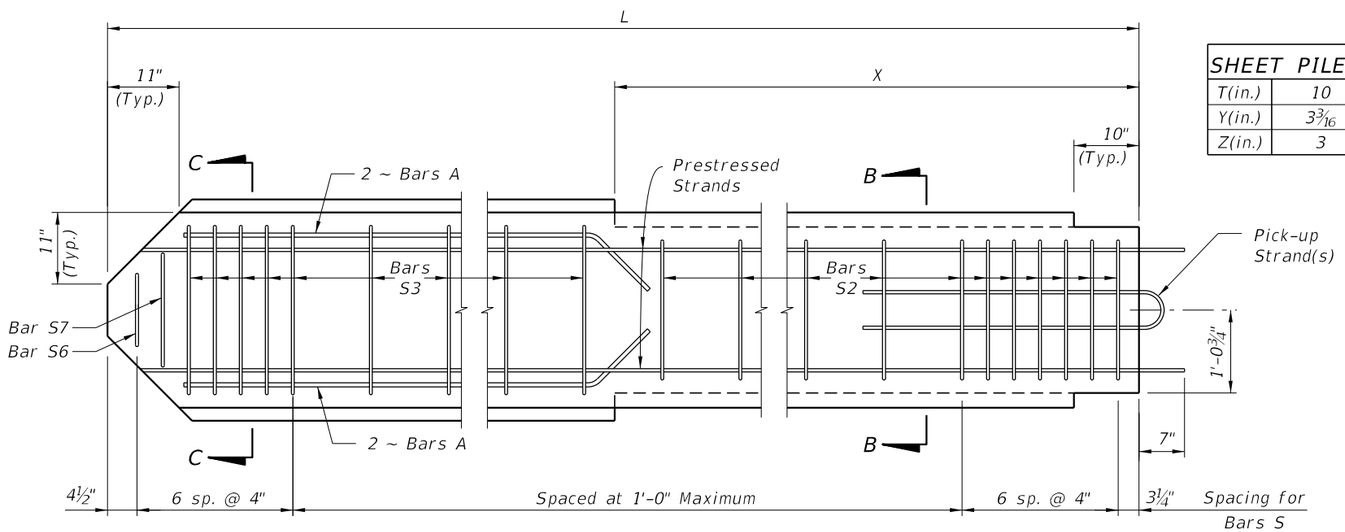

STARTER PILE

SHEET PILE DIMENSIONS		
T(in.)	10	12
Y(in.)	3 3/16	4 3/16
Z(in.)	3	4

BAR BENDING DIAGRAMS

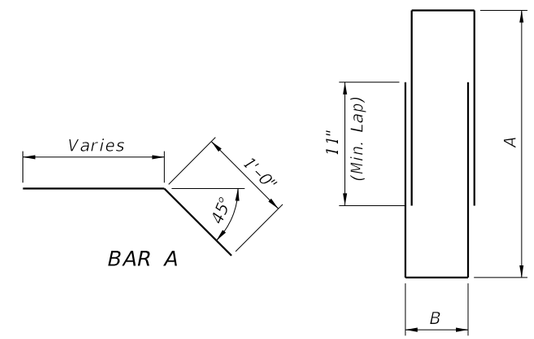

BAR S (2-PIECE)
(See Note 4)

DIMENSION A	
S1	1'-11¾"
S2	1'-9½"
S3	2'-2"
S4	1'-5¼"
S5	1'-9¼"
S6	1'-1"
S7	1'-9"

DIMENSION B	
T=10 in.	4"
T=12 in.	6"

NOTES:
1. Intermediate Prestress Strands not shown in Elevations and Sections.
2. All bar dimensions are out-to-out.
3. Bars A are GFRP #5
4. Bars S are GFRP #4 and may be a single closed bar (hoop) with equivalent area and tensile strength.
5. For Dimensions L and X see Sheet Pile Data Table in Structures Plans.

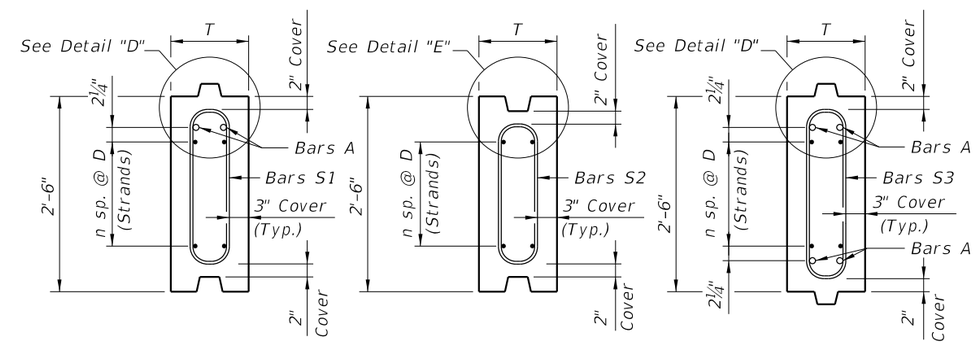

SECTION A-A SECTION B-B SECTION C-C

Strand Material	Wall Thickness	STRAND DIA. (in.)	MAXIMUM L *	n	D (in.)	TOTAL # OF STRANDS	Initial (Jacking) FORCE (Kip)
CFRP Strand	T=10 in.	0.49 (12.5mm)	26'-0"	4	4	10	28.7
		0.5 (12.7mm)	27'-0"	3	5¼ (2)	8	41.3
		0.6 (15.2mm)	27'-0"	3	5¼ (2)	8	42.7
	T=12 in.	0.49 (12.5mm)	31'-0"	5	3¼ (1)	12	28.7
		0.5 (12.7mm)	31'-0"	3	5¼ (2)	8	41.3
		0.6 (15.2mm)	31'-0"	3	5¼ (2)	8	42.7
HSSS Strand	T=10 in.	0.5 (12.7mm)	27'-0"	5	3¼ (1)	12	25.7
		0.6 (15.2mm)	26'-0"	3	5¼ (2)	8	36.5
	T=12 in.	0.5 (12.7mm)	32'-0"	6	2¾ (3)	14	25.7
		0.6 (15.2mm)	32'-0"	4	4	10	36.5

Alternate symmetrical strand patterns:
(1) 4 sp. @ 2" & 1 sp. @ 8"
(2) 2 sp. @ 4" & 1 sp. @ 8"
(3) 4 sp. @ 2" & 2 sp. @ 4"

* Based on lifting using single point pick-up.

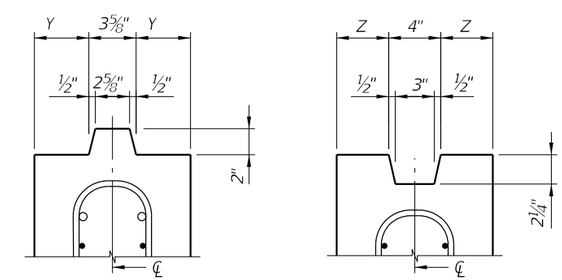

DETAIL "D" (Typical Tongue)

DETAIL "E" (Typical Groove)

TYPE "A" STANDARD SECTION

10/23/2018 12:48:14 PM

LAST REVISION	REVISION	DESCRIPTION:			INDEX	SHEET
11/01/18			FY 2019-20 STANDARD PLANS	PRECAST CONCRETE SHEET PILE WALL (CFRP/GFRP & HSSS/GFRP)	455-440	2 of 4

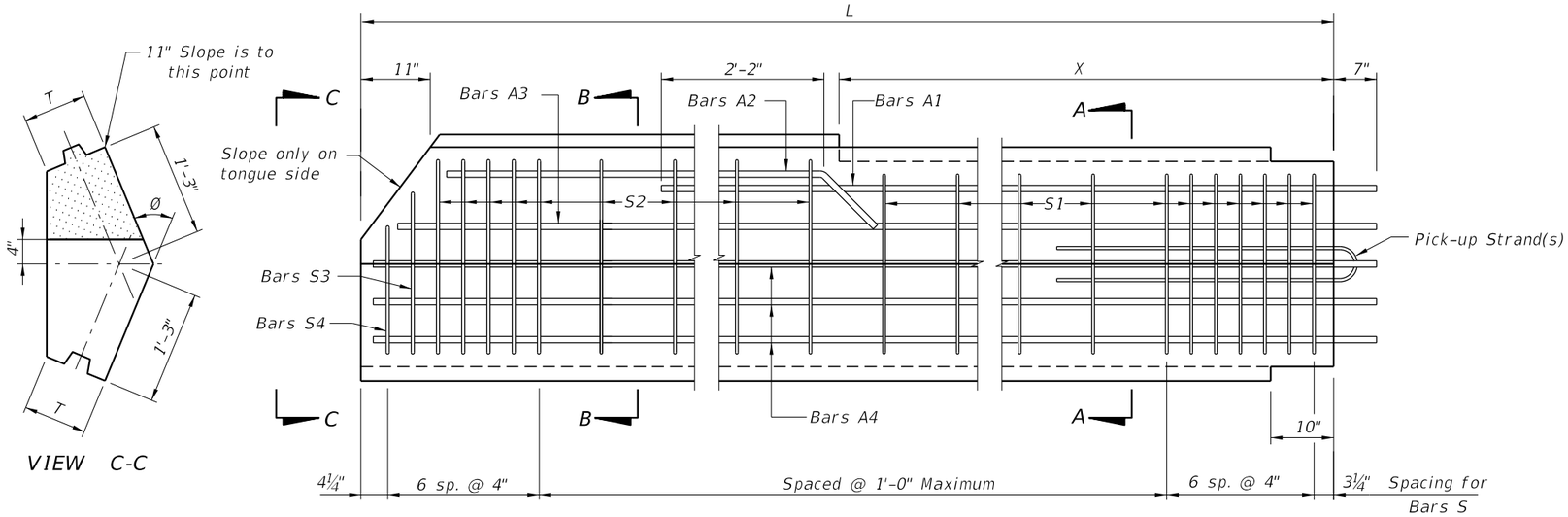

ELEVATION
(TYPE "B1" PILE SHOWN, TYPE "B2" PILE OPPOSITE HAND)

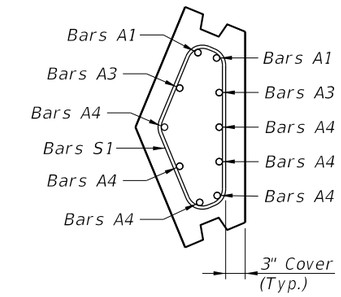

SECTION A-A

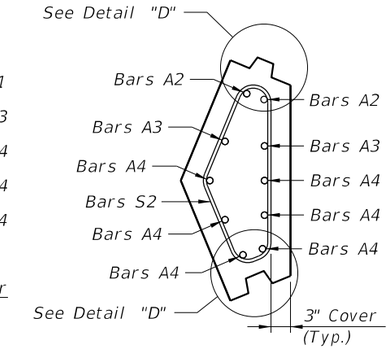

SECTION B-B

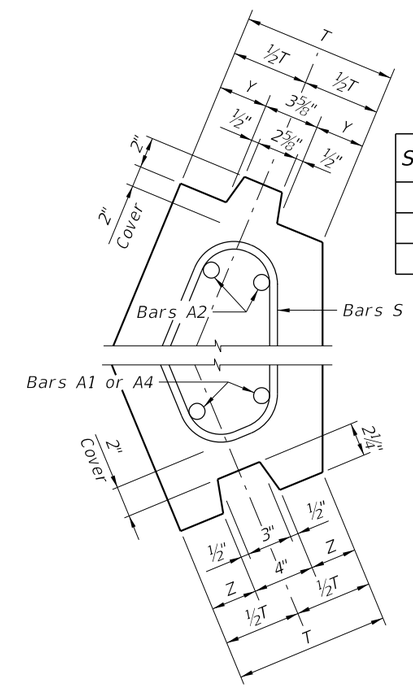

SHEET PILE DIMENSIONS		
T (in.)	10	12
Y (in.)	3 3/16	4 3/16
Z (in.)	3	4

DETAIL "D"
(TYPE "B1" PILE SHOWN, TYPE "B2" PILE OPPOSITE HAND)

BAR BENDING DIAGRAMS

STIRRUP DIMENSIONS (T = 10")

Ø	BAR MARK	R1	R2	R3	R4	R5	R6	R7	R8
30°	S1	11¼"	9¾"	1'-6½"	2½"	5"	4¾"	5½"	4¼"
	S2	1'-1½"	9¾"	1'-8¾"	2½"	4½"	5½"	5¾"	4¼"
	S3	11¼"	8"	1'-6"	1¼"	5"	4½"	4½"	5"
	S4	11¼"	4¼"	1'-1¾"	1¾"	5"	3¾"	2½"	6¼"
45°	S1	11½"	8"	1'-4"	4"	5½"	6½"	8"	4"
	S2	1'-1¾"	8"	1'-5¾"	4"	4½"	7½"	8"	4"
	S3	11½"	6¾"	1'-4"	2¼"	5½"	6¾"	6¾"	5½"
	S4	11½"	3½"	1'-0"	3"	5½"	5"	3½"	7"
60°	S1	1'-0"	6"	1'-0¾"	5¼"	6"	7¼"	10¼"	3"
	S2	1'-2"	6"	1'-2¾"	5¼"	4¾"	8¾"	10½"	3"
	S3	1'-0"	4¾"	1'-1½"	3¼"	6"	8"	8¾"	5¼"
	S4	1'-0"	2½"	10"	4½"	6"	5¾"	4"	7½"

STIRRUP DIMENSIONS (T = 12")

Ø	BAR MARK	R1	R2	R3	R4	R5	R6	R7	R8
30°	S1	11½"	10"	1'-6"	3½"	7"	4¾"	5¾"	6"
	S2	1'-1¾"	10"	1'-8¼"	3½"	6½"	5¼"	5¾"	6"
	S3	11½"	8¼"	1'-5¾"	2"	7"	4¾"	4½"	7¼"
	S4	11½"	4"	1'-1¼"	2¼"	7"	3¾"	2½"	8¼"
45°	S1	1'-0"	8½"	1'-3¼"	5¼"	7½"	6¼"	8½"	5¼"
	S2	1'-2¼"	8½"	1'-5½"	5¼"	6½"	7¼"	8½"	5¼"
	S3	1'-0"	7"	1'-4"	3"	7½"	6¾"	7"	7¼"
	S4	1'-0"	3½"	11¾"	3¾"	7½"	5"	3½"	9"
60°	S1	1'-0½"	6¼"	11¾"	7"	8"	6¾"	10¾"	4"
	S2	1'-2¾"	6¼"	1'-2"	7"	6¾"	8"	10¾"	4"
	S3	1'-0½"	5"	1'-1½"	4"	8"	8"	9"	7"
	S4	1'-0½"	2½"	9½"	5½"	8"	5½"	4¼"	9¼"

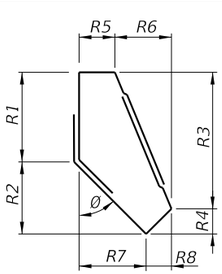

BARS S1 & S2
(2 - PIECE)

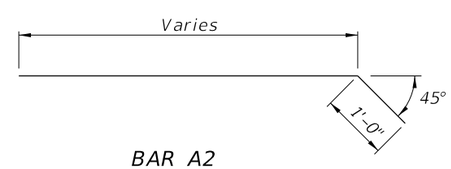

BAR A2

NOTES:
1. This drawing includes details for precast concrete corner piles for 10" and 12" thick sheet pile systems. The details apply equally to both thicknesses.
2. The bar configurations shown in Sections A-A and B-B shall be used for Ø angles between 15° and 75°. For Ø angles not shown, the reinforcing bar dimensions may be interpolated or extrapolated from the stirrup dimensions shown.
3. All bar dimensions are out-to-out.
4. Bars A are GFRP #8 and Bars S are GFRP #4.
5. Values for Stirrup Dimensions are shown for Ø equal to 30°, 45° & 60° only.
6. Bars S are fabricated as a 2 piece stirrup with a minimum lap length of 8", as shown in Bar Bending Diagrams, or a single closed bar (hoop) when approved by the Engineer.
7. If Type "B1" or "B2" pile is used as a Starter Pile show tongue on both sides of pile from Dim. X down. Show dimensions for Bars S2, S3 & S4 in shop drawings.
8. If tongue must be on the opposite side from that shown all dimensions and Bars A, S2, S3 and S4 will be the same but opposite hand.
9. For Dimensions L, X and Angle Ø, see Sheet Pile Data Table in Structures Plans.

TYPE "B1" AND "B2" - VARIABLE ANGLE CORNER PILE

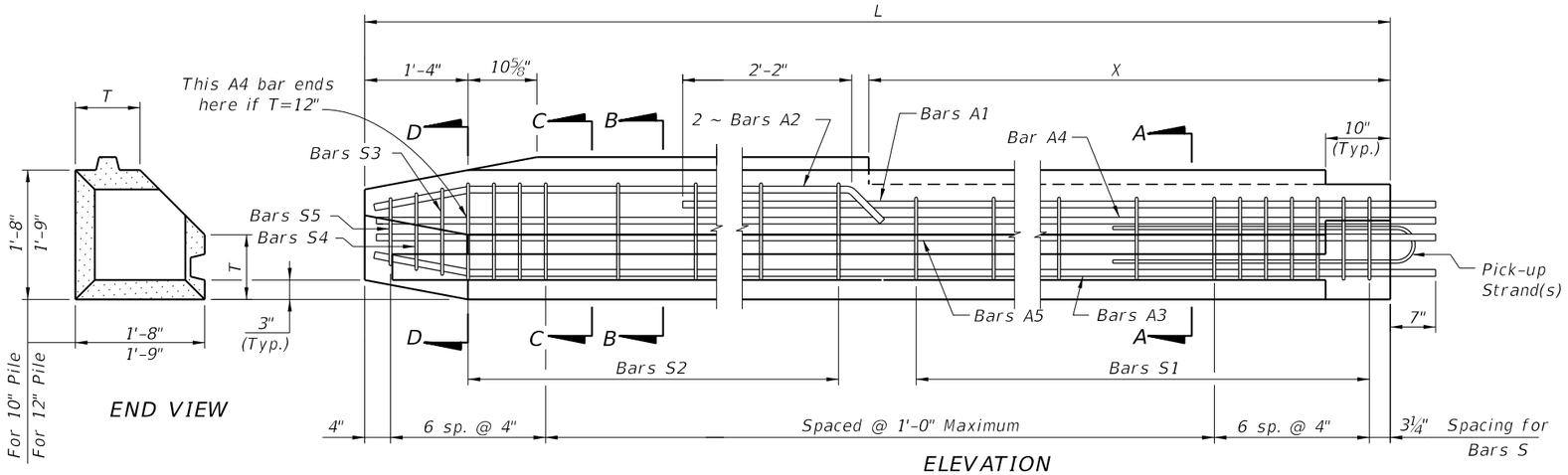

ELEVATION
(TYPE "C1" PILE SHOWN, TYPE "C2" PILE OPPOSITE HAND)

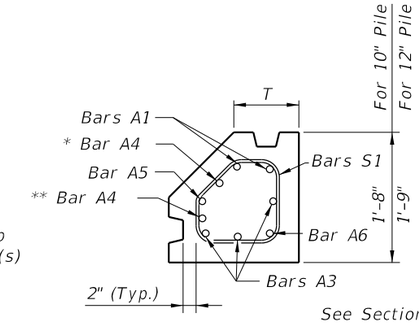

SECTION A-A

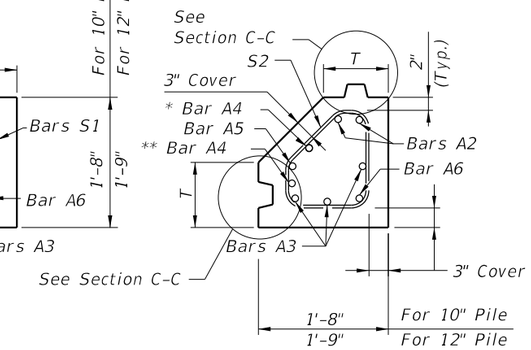

SECTION B-B

* This Bar A4 shall be 1'-2" shorter than other A4 bars for T = 12".

** This Bar A4 (not shown in elevation) is included only if T = 12".

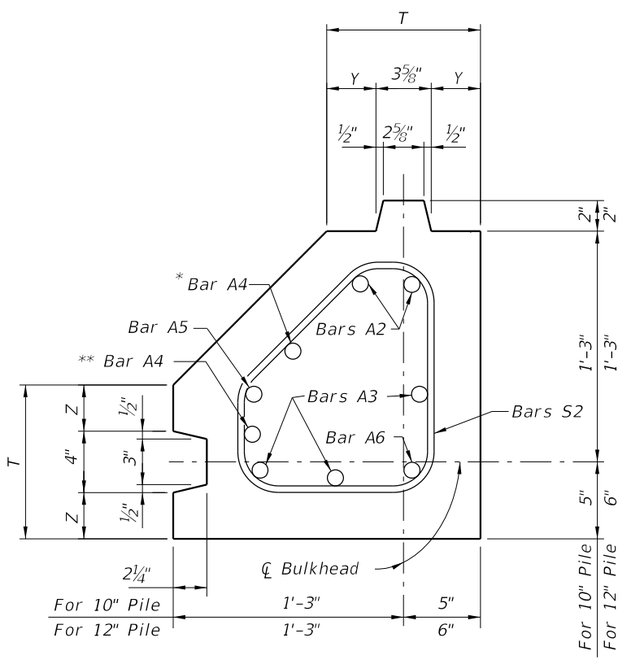

SECTION C-C (T=10" or 12")

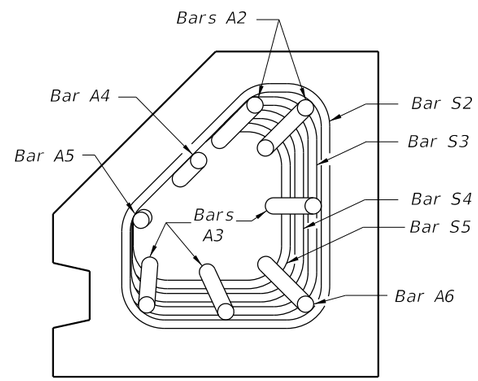

SECTION D-D (T=10")

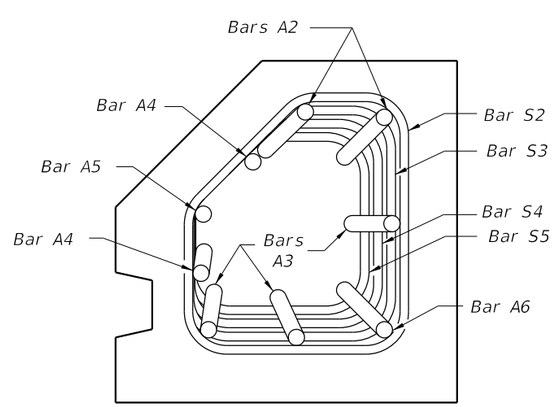

SECTION D-D (T=12")

STIRRUP DIMENSIONS					
θ	T (in.)	BAR MARK	R1	R2	R3
90°	10	S1	7"	5¾"	7"
		S2	7"	8"	4¾"
		S3	6¼"	7¼"	4¾"
		S4	5½"	6½"	4¾"
		S5	4¾"	5¾"	4¾"
	12	S1	9"	4¾"	9"
		S2	9"	7"	6¾"
		S3	8¼"	6¼"	6¾"
		S4	7½"	5½"	6¾"
		S5	6¾"	4¾"	6¾"

SHEET PILE DIMENSIONS		
T (in.)	10	12
Y (in.)	3 3/16	4 3/16
Z (in.)	3	4

BAR BENDING DIAGRAMS

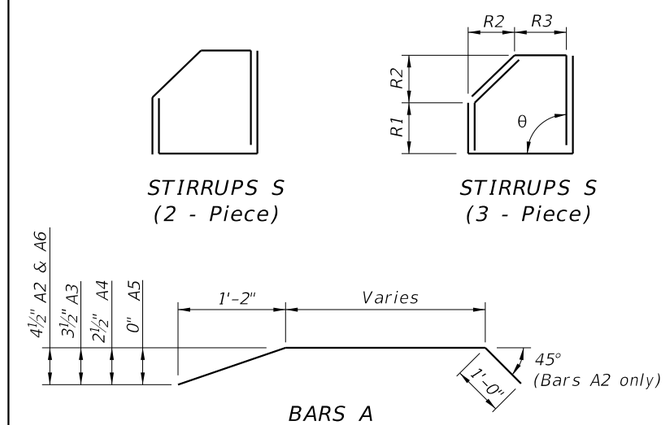

Note: All Bar dimensions are out-to-out.

NOTES:
1. All bar dimensions are out-to-out.
2. Bars A are GFRP #8 and Bars S are GFRP #4.
3. This drawing includes information for precast Corner Piles for 10" and 12" thick Sheet Pile systems. The details apply to both thicknesses but the bar configurations change slightly according to the thickness values used.
4. If Type "C1" or "C2" pile is used as a Starter Pile show tongue on both sides of pile from Dim. X down. Show dimensions for Bars S2, S3, S4 & S5 in shop drawings.
5. At the Contractor's option Bars S may be fabricated as a 2 piece or 3 piece bar with a minimum lap length of 8", as shown in Bar Bending Diagrams, or as a single closed bar (hoop) when approved by the Engineer.
6. If tongue must be on opposite side (Groove Side) from that shown, all dimensions and reinforcement shall follow the corresponding Tongue or Groove side.
7. For Dimensions L and X see Sheet Pile Data Table in Structures Plans.

TYPE "C1" AND "C2" - RIGHT ANGLE CORNER PILE