## GENERAL NOTES:

1. Meet the requirements of Index 102-100.

2. For fabrication details see Sheets 15 thru 17.

3. HANDLING: Do not lift or move the Barrier Units by using Bars 6D that extend from the ends of the units. Approximate weight of one unit equals 2.7 tons.

4. CONNECTION PIN ASSEMBLY: Use steel for Connection Pin and Top Plate assemblies in accordance with ASTM A36 or ASTM A709 Grade 36. Nondestructive testing of welds is not required. At the Contractor's option, a 3/8" diameter hole may be provided at the bottom of the Connection Pin, as shown, for the installation of a vandal resistance bolt.

5. CONNECTION PIN INSTALLATION: Initially set Barrier Units by using a 3 5/8" wooden block between ends of adjacent units. Install Connection Pin between adjacent Barrier Units as shown, then pull newly placed Barrier Unit away from adjacent Barrier Unit to remove slack between Connection Pin and Bars 6D (except as shown on Sheet 2). Do not use Barrier Units unconnected.

6. REUSE OF CONNECTION PINS AND STAKES: Connection pins and stakes may be reused if they have the structural integrity of new pins.

7. REMOVAL OF BOLTS, STAKES AND KEEPER PINS: Upon removal or relocation of Barrier Units, remove all Anchor Bolts and completely fill the remaining holes in bridge decks, approach slabs and roadway rigid pavements that are to remain with Magnesium Ammonium Phosphate Concrete in accordance with Specification 930 or with an Epoxy Resin Compound, Type F or Q, in accordance with Specification 926. If a flexible pavement is present and is to remain, completely fill the remaining holes in the flexible pavement with hot or cold patch asphalt material.

8. Type K Anchored to Free-Standing transitions: Use the 3-3-2-1 Anchorage Transition Detail when transitioning Free-Standing and Anchored Units or when connecting Free-Standing runs to Crash Cushions, as shown in this Index.

## NOTES FOR THRIE-BEAM GUARDRAIL SPLICE INSTALLATIONS:

1. THRIE-BEAM GUARDRAIL: Provide Thrie-Beam Guardrail for splices meeting the requirements of specification 967 and as follows: Two panels per splice (One panel per side) of Class B (10 Gauge), or Four panels per splice (Two nested panels per side) of Class A (12 Gauge). Use a 12'-6" guardrail panel. Provide and install all other associated metallic guardrail components (Terminal Connectors, Shoulder Bolts, Hex Bolts and Nuts, Filler Plates, etc.) in accordance with Index 536-001. Install five Guardrail Anchor Bolts at each end of each splice in any of the standard seven anchor bolt holes in the Thrie-Beam Terminal Connector. If reinforcing steel is encountered when drilling holes for Guardrail Anchor Bolts in Type K Barrier Units, shift Thrie-Beam Terminal Connector so as to clear reinforcing steel within the given tolerances or select a different bolt hole to use. Do not drill or cut through reinforcing steel within Type K Barrier Units. Drilling or cutting through reinforcing steel within permanent concrete traffic railings is permitted.

2. GUARDRAIL OFFSET BLOCKS: Provide and install timber Offset Blocks meeting the requirements of Specification 967. Field trim Offset Blocks as required for proper fit. Utilize Offset Blocks as shown and required in order to prevent bending or kinking of Thrie-Beam Guardrail panels.

3. CONCRETE FOR FILLING TAPERED TRAFFIC RAILING TOES: Provide concrete for filling tapered toes of Traffic Railings as shown meeting the material requirements of Specification 346, any Class, or a commercially available pre-bagged concrete mix (3000 psi minimum compressive strength). Sampling, testing, evaluation and certification of the concrete in accordance with Specification 346 is not required. Saturate with water the surfaces upon and against which the concrete fill will be placed prior to placing concrete. Place and finish concrete fill using forms or by hand methods to the general configurations shown so as to provide a smooth shape transition between the Type K Barrier and the adjacent traffic railing. A low slump is desirable if placing and finishing concrete by hand methods. Cure the concrete fill by application of a curing compound, or by covering with a wet tarp or burlap for a minimum of 24 hours. Completely remove the concrete fill upon relocation or removal of the Type K Temporary Concrete Barrier.

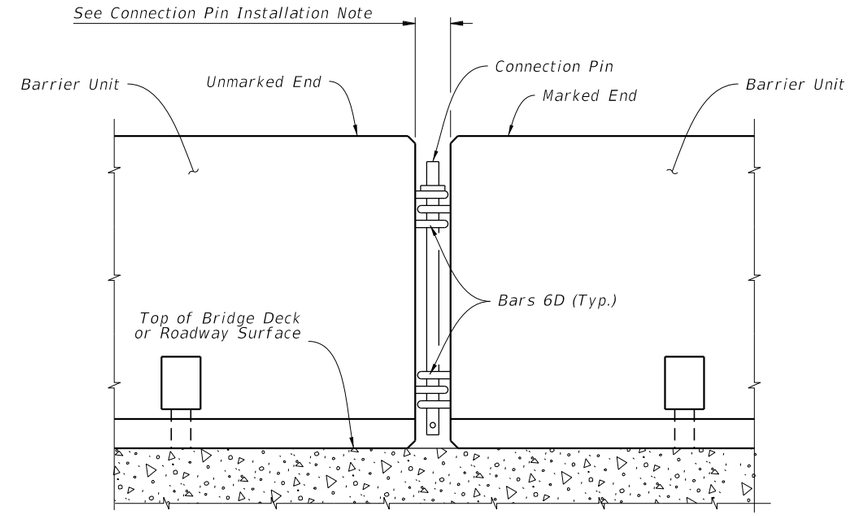


DETAIL OF CONNECTION BETWEEN BARRIER UNITS

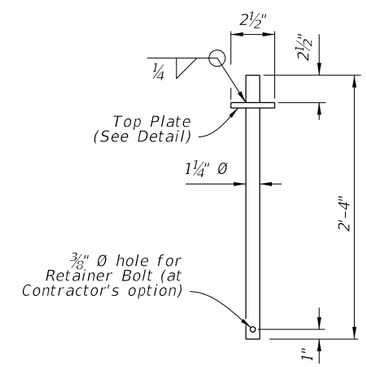


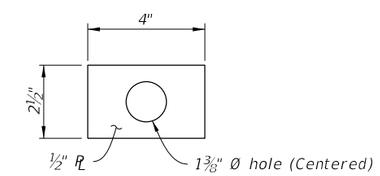


TOP PLATE DETAIL

CONNECTION PIN DETAIL

LEGEND:

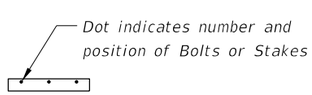


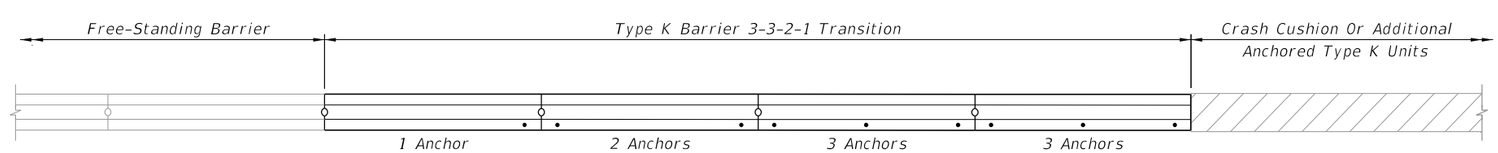


3-3-2-1 ANCHORAGE TRANSITION DETAIL

9/18/2018 10:18:35 AM

| LAST REVISION | REVISION | DESCRIPTION: | | | INDEX | SHEET |
|---|---|---|---|---|---|---|
| 11/01/17 | | | FDOT FY 2019-20 STANDARD PLANS | TYPE K TEMPORARY CONCRETE BARRIER SYSTEM | 102-110 | 1 of 17 |

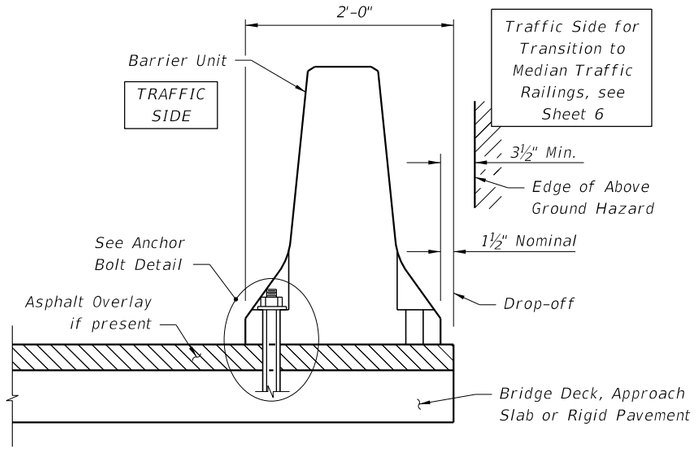


TYPICAL SECTION

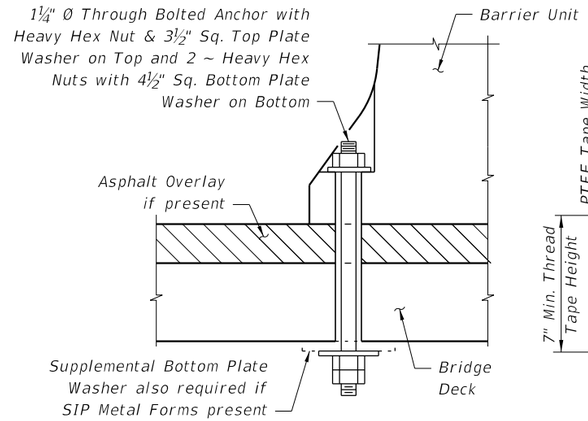


THROUGH BOLTED ANCHOR

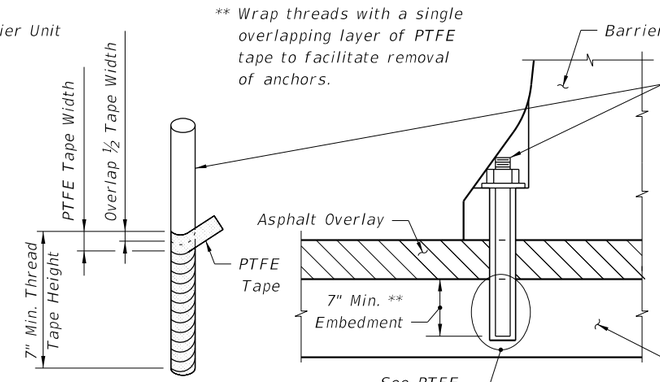


PTFE TAPING DETAIL




WITH ASPHALT OVERLAY

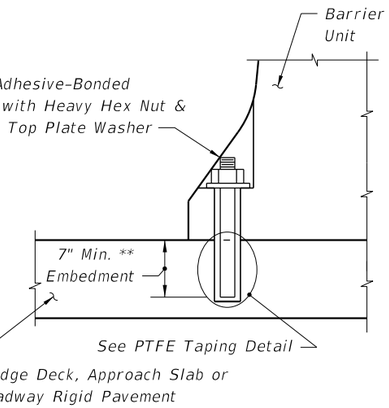


WITHOUT ASPHALT OVERLAY

ADHESIVE BONDED ANCHOR INSTALLATION

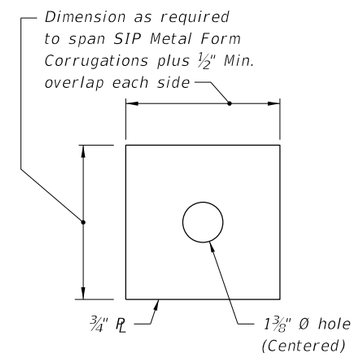


SUPPLEMENTAL BOTTOM PLATE WASHER DETAIL

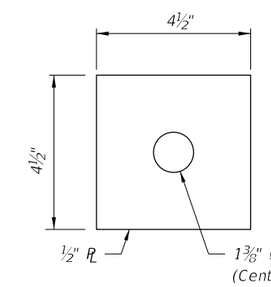


BOTTOM PLATE WASHER DETAIL

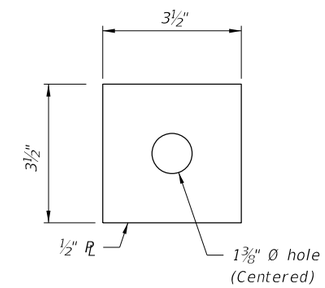


TOP PLATE WASHER DETAIL

## NOTES FOR BOLTED INSTALLATIONS:

Bridge deck shown, approach slab or rigid pavement similar; installation adjacent to drop-off shown, median transition installation similar.

LIMITATION OF USE: This installation technique can only be used on rigid pavement and concrete bridge decks as shown. Anchor Bolts must not be installed on both sides of the Barrier Units. Do not bolt down Barrier Units across bridge finger or modular expansion joints.

ANCHOR BOLTS, NUTS AND WASHERS: When using Adhesive-Bonded Anchor Bolts, use fully threaded rods in accordance with ASTM F 1554 Grade 36. Install Anchor Bolts for through bolting in accordance with ASTM A 307 or ASTM F 1554 Grade 36. Install nuts in accordance with ASTM A 563 or ASTM A 194. Install Flat Washers in accordance with ASTM F 436 and Plate Washers in accordance with ASTM A 36 or ASTM A 709 Grade 36.

Install three (3) Anchor Bolts per Barrier Unit on the traffic side of the Barrier Units as shown, except for Transition Installations. For the number and positions of Anchor Bolts required in Transition Installations see Sheets 8 and 9 and Index 102-100. Drilling through deck reinforcing steel to install Anchor Bolts is permitted. Unless otherwise shown in the Plans, at the Contractor's option Barrier Units may be installed by through bolting (where geometrically possible) or by the use of Adhesive-Bonded Anchor Bolts. Do not drill into or otherwise damage the tops of supporting beams or girders, bridge deck expansion joints or drains. Install Anchor Bolts and Nuts so that the maximum extension beyond the face of the Barrier Units is ½". Snug tighten the Nuts on the Anchor Bolts. For through bolted installations, snug tighten the double Nuts on the underside of the deck against each other to minimize the potential for loosening.

Omit one (1) Anchor Bolt within a single Barrier Unit if a conflict exists between the Anchor Bolt location and a bridge deck expansion joint or drain. The adjacent Barrier Units must each be installed with the standard three (3) Anchor Bolts.

Omit one (1) Anchor Bolt within a single Barrier Unit as shown in the Treatment at Bridge Deck Expansion Joint Schematic if the Barrier Unit straddles a bridge deck expansion joint. The adjacent Barrier Units must each be installed with the standard three (3) Anchor Bolts.

ADHESIVE-BONDING MATERIAL SYSTEMS: When using Adhesive Bonding Material Systems for Anchor Bolts, Use Type HSHV in accordance with Specification 937 and installed them in accordance with Specification 416. Prior to installation of the Barrier Units in the Plan location(s), install a demonstration Barrier Unit using the proposed production installation method, at a location approved by the Engineer. In lieu of the production test requirements of Specification 416, install six (6) Adhesive-Bonded Anchor Bolts in the demonstration Barrier Unit and test each Anchor Bolt with a 29,800 pound tensile proof load. Install and test additional demonstration Barrier Units when requested by the Engineer. Remove the demonstration Barrier Unit prior to testing the Anchor Bolts. Remove the test Anchor Bolts after testing as directed by the Engineer.

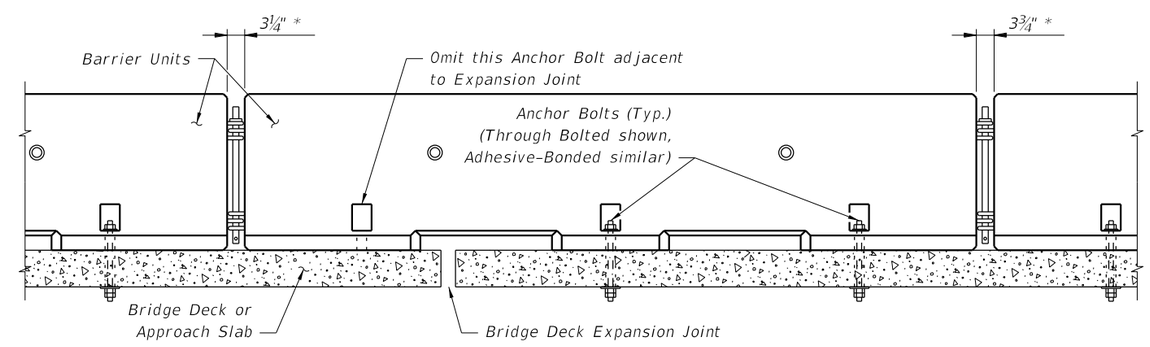


* To accommodate movement at Expansion Joint, set Barrier Units with 3¾" gap at locations shown.

TREATMENT AT BRIDGE DECK EXPANSION JOINT SCHEMATIC

ANCHORED INSTALLATIONS - BOLTED

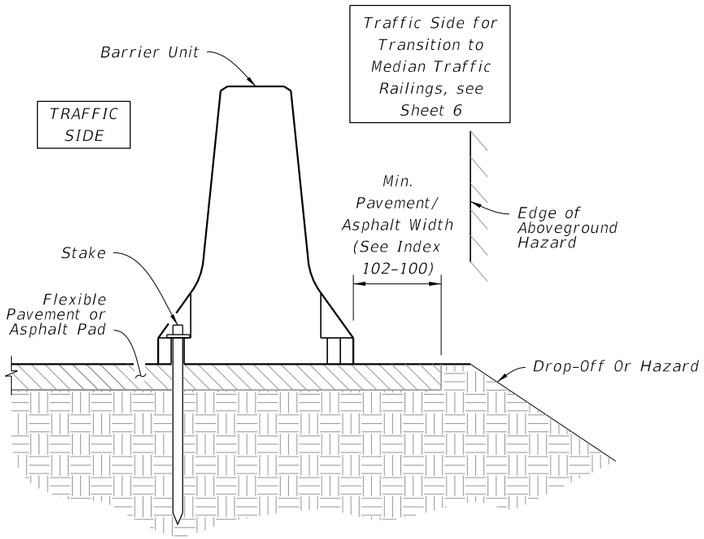


TYPICAL SECTION

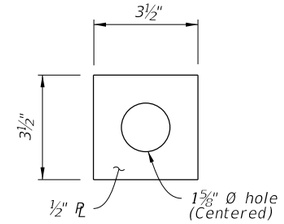


STOP PLATE DETAIL

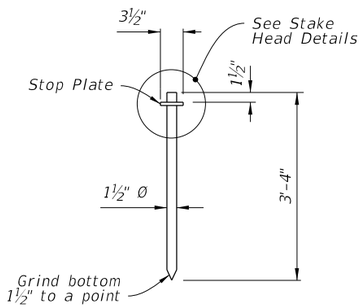


STAKE DETAIL

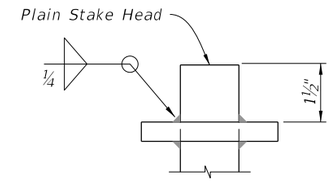


PLAIN STAKE HEAD DETAIL

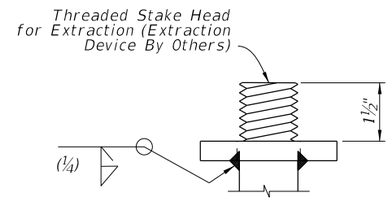


OPTIONAL EXTRACTION STAKE HEAD DETAIL

## NOTES FOR STAKED INSTALLATIONS:

LIMITATION OF USE: This installation technique can only be used on flexible pavement or an Asphalt Pad as shown. Stakes must not be installed on both sides of the Barrier Units.

STAKES: Provide steel for Stake assemblies in accordance with ASTM A 36 or ASTM A 709 Grade 36. Weld in accordance with the American Welding Society Structural Welding Code (Steel) ANSI/AWS D1.1 (current edition). Welding metal are E60XX or E70XX. Nondestructive testing of welds is not required.

Install three (3) Stakes on the traffic side of the Barrier Units as shown, except for Transition Installations. For the number and positions of stakes required in Transition Installations see Sheets 4, 5 and 6 and Index 102-100. Install Stakes so that the Stop Plate is snug against the bottom of the Anchor Blockout.

BURIED UTILITIES: Prior to installation of Stakes verify locations of all adjacent buried utilities, drainage structures, pipes, etc. If conflicts between Stake locations and buried elements exist, a maximum of two (2) Stakes within a single Barrier Unit may be omitted if the adjacent Barrier Units are installed with the standard three (3) Stakes.

## ANCHORED INSTALLATIONS - STAKED

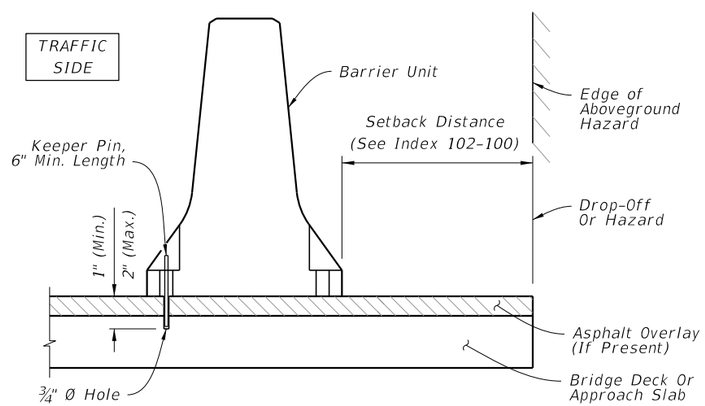


(Bridge Deck Shown, Approach Slab Similar)

TYPICAL BRIDGE SECTION

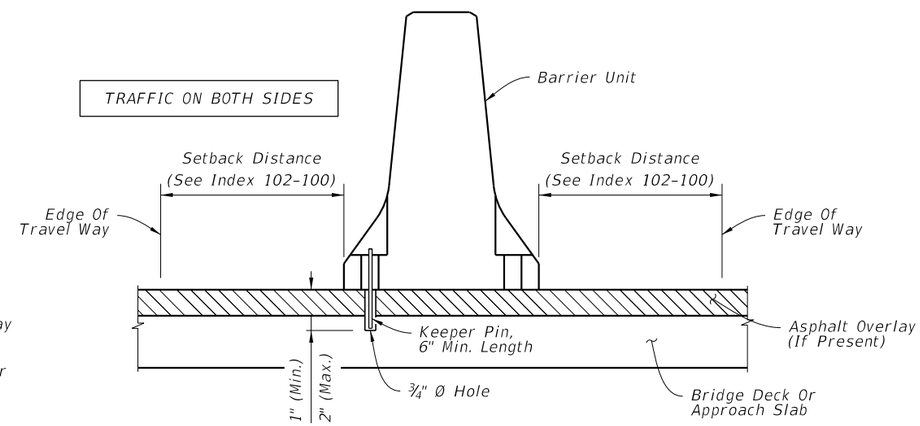


TYPICAL MEDIAN SECTION

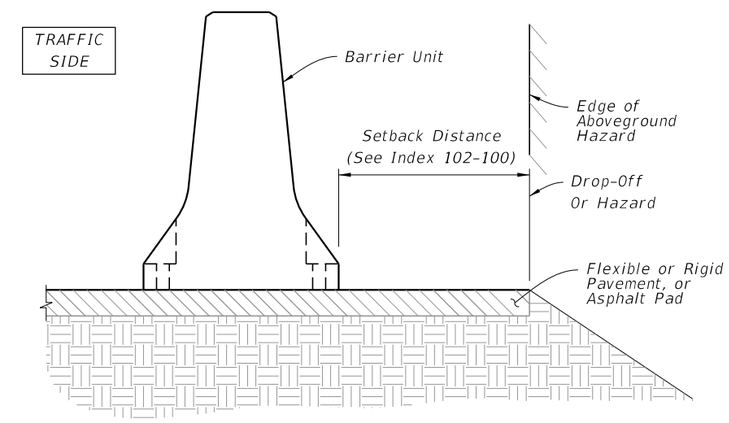


TYPICAL ROADWAY SECTION

## NOTES FOR FREE-STANDING INSTALLATION:

1. For Bridge Decks only, use Keeper Pins that are ½" diameter, smooth steel bar in accordance with ASTM A36 or ASTM A709 Grade 36. As directed by the Engineer in order to limit vibration induced translation of the Barrier Units, install one (1) Keeper Pin per Barrier Unit as shown.
2. If traffic is on both sides of the Barrier (i.e. Median Installation), alternate Keeper Pin locations from side to side of Barrier Units along the length of the installation. If traffic is on only one side of the barrier install keeper pins on the traffic side as shown.
3. Do not drill into or otherwise damage bridge deck expansion joints or drains.

## FREE-STANDING INSTALLATION

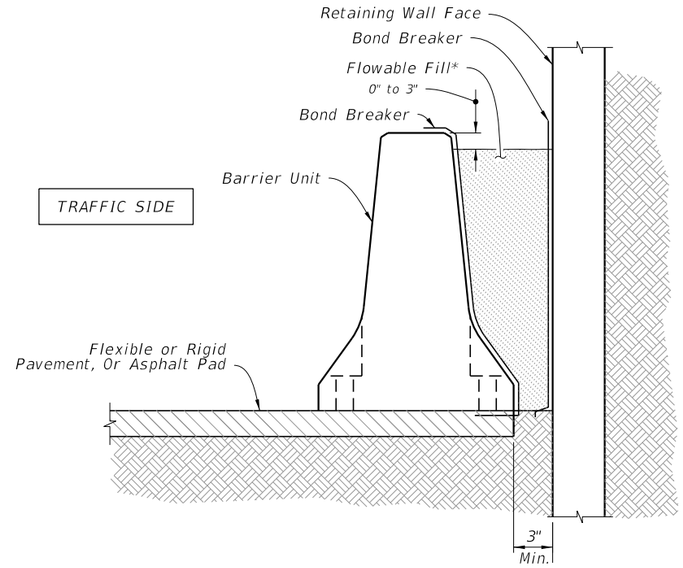


TYPICAL SECTION
ADJACENT TO RETAINING WALL WITH FLOWABLE FILL BACK-FILL

*FLOWABLE FILL: Provide Excavatable Flowable Fill in accordance with Specification 121.

## FLOWABLE FILL BACK-FILL ROADSIDE INSTALLATIONS

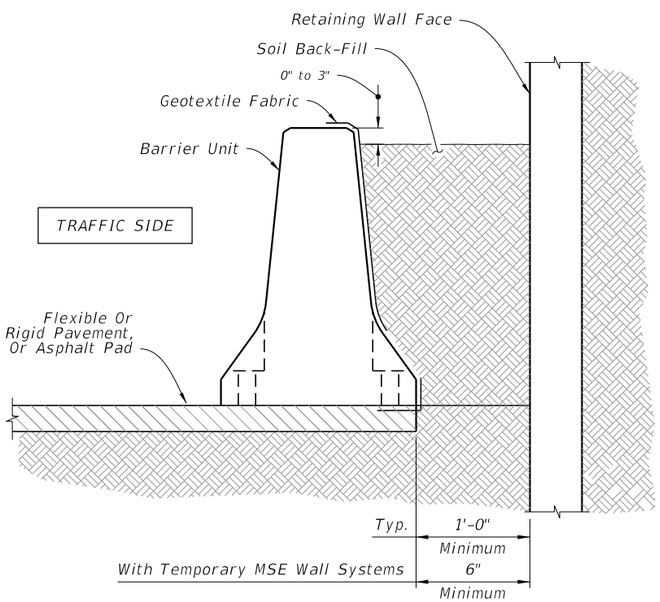


TYPICAL SECTION
ADJACENT TO RETAINING WALL WITH SOIL BACK-FILL

### NOTES FOR SOIL BACK-FILLED ROADWAY INSTALLATIONS:

SOIL BACK-FILL MATERIAL: Provide Back-Fill Material consisting of any available clean soil. Compact Back-Fill Material until the soil mass is firm and unyielding. Provide erosion control as specified in the Plans. If none is specified in the Plans, provide erosion control as required to maintain the integrity of the Back Fill embankment.

GEOTEXTILE FABRIC: Provide Type D-5 Geotextile Fabric in accordance with Specification 985 to contain Back Fill Material behind Barrier Units. Geotextile Fabric may be continuous over the length and height of the installation or may be individual pieces as required to cover the Lift / Drain Slots and open vertical joints between Barrier Units.

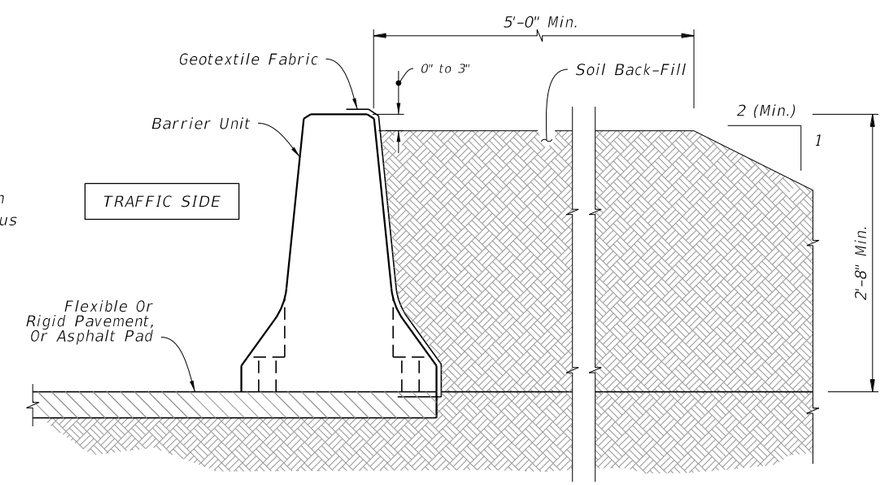


TYPICAL SECTION
WITH SOIL BACK-FILL

## SOIL BACK-FILLED ROADSIDE INSTALLATIONS

9/18/2018 10:18:39 AM

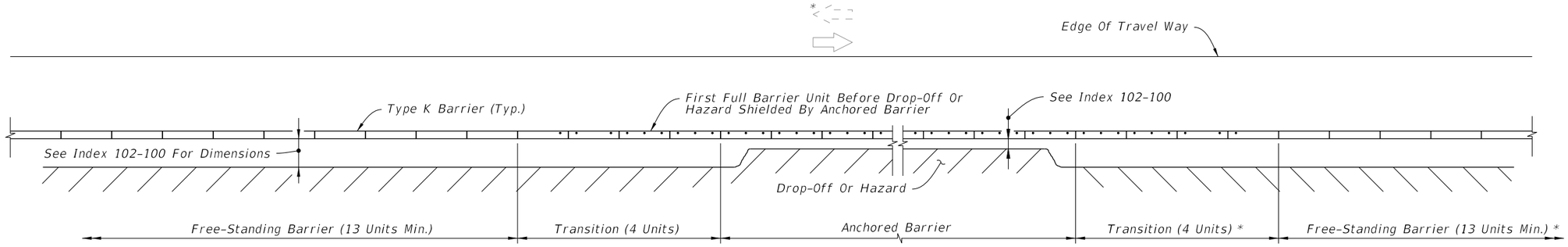


## APPROACH TRANSITION FROM FREE-STANDING TO ANCHORED TYPE K TEMPORARY CONCRETE BARRIERS

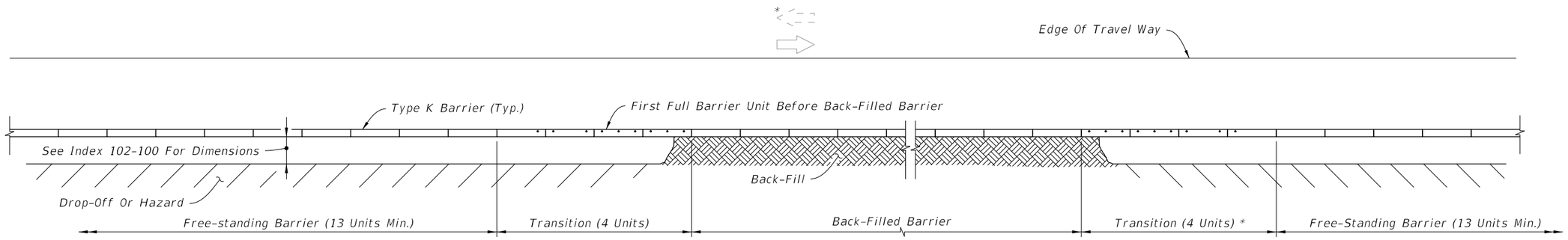


## APPROACH TRANSITION FROM FREE-STANDING TO BACK-FILLED TYPE K TEMPORARY CONCRETE BARRIERS

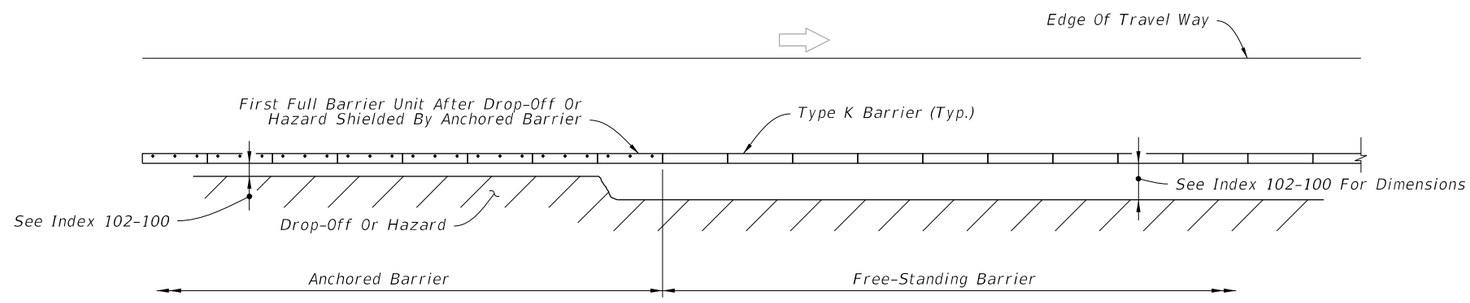


## TRAILING END TRANSITION FROM ANCHORED TO FREE-STANDING TYPE K TEMPORARY CONCRETE BARRIERS

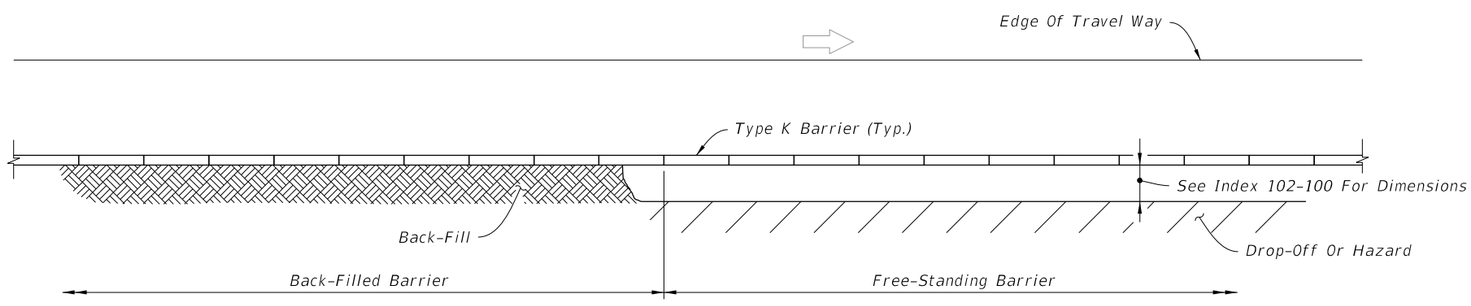


## TRAILING END TRANSITION FROM BACK-FILLED TO FREE-STANDING TYPE K TEMPORARY CONCRETE BARRIERS

* **NOTE:**
Where Barrier is located within Clear Zone of opposing traffic, Approach Transition is required.

**LEGEND:**

Dot indicates number and position of Bolts or Stakes

9/18/2018 10:18:39 AM

| LAST REVISION | REVISION | DESCRIPTION: | | | INDEX | SHEET |
|---|---|---|---|---|---|---|
| 11/01/17 | | | FY 2019-20 STANDARD PLANS | TYPE K TEMPORARY CONCRETE BARRIER SYSTEM | 102-110 | 5 of 17 |

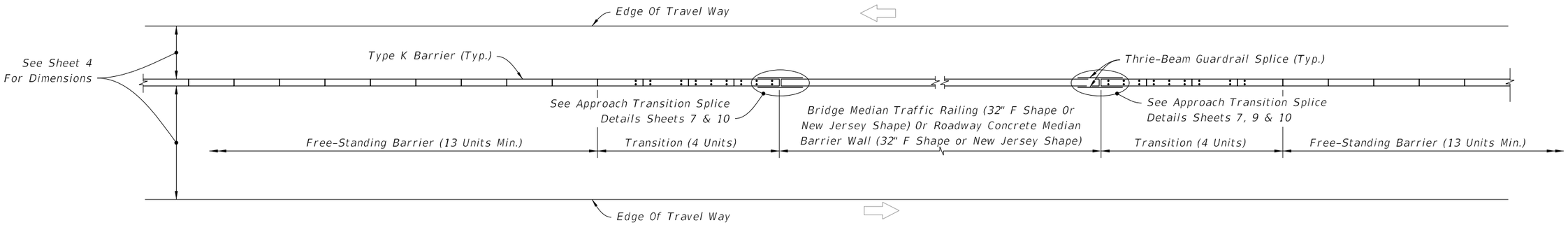


TRANSITION FROM FREE-STANDING TYPE K TEMPORARY CONCRETE BARRIERS TO BRIDGE MEDIAN TRAFFIC RAILING OR ROADWAY MEDIAN CONCRETE BARRIER WALL

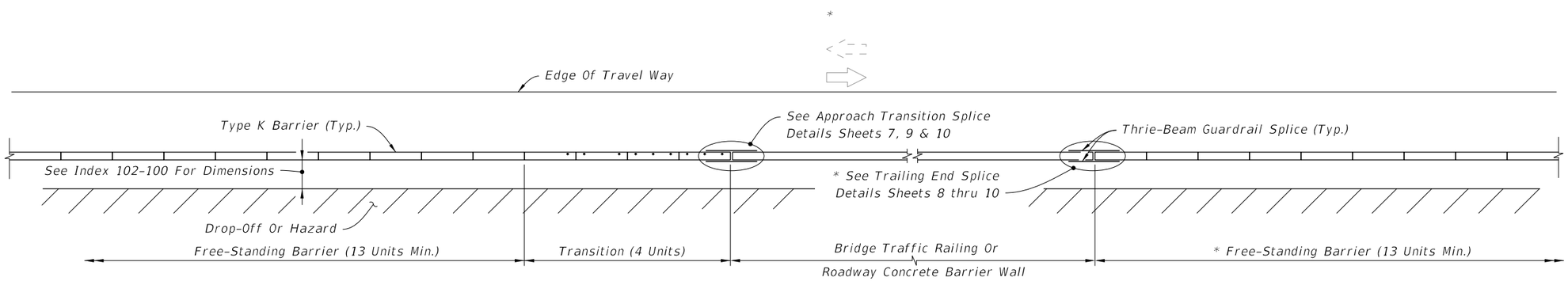


TRANSITION FROM FREE-STANDING TYPE K TEMPORARY CONCRETE BARRIERS TO BRIDGE TRAFFIC RAILING OR ROADWAY CONCRETE BARRIER WALL

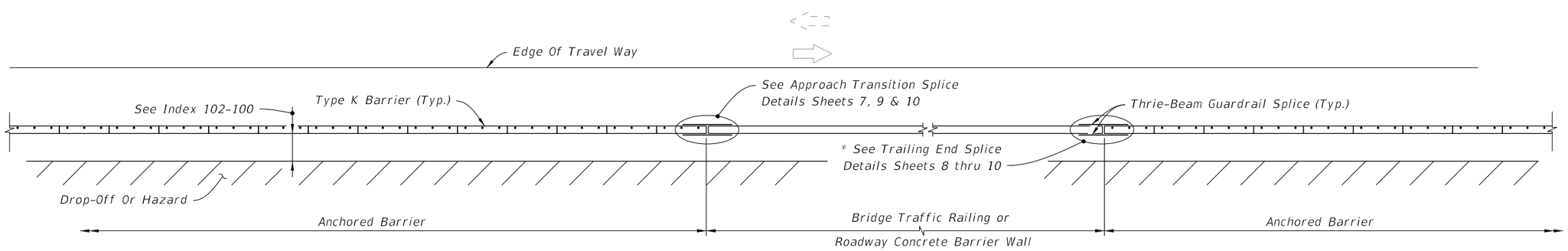


TRANSITION FROM ANCHORED TYPE K TEMPORARY CONCRETE BARRIERS TO BRIDGE TRAFFIC RAILING OR ROADWAY CONCRETE BARRIER WALL

* NOTE:
Where barrier is located within clear zone of opposing traffic, approach transition is required.

LEGEND:
Dot indicates number and position of Bolts or Stakes

9/18/2018 10:18:40 AM

| LAST REVISION | REVISION | DESCRIPTION: | | | INDEX | SHEET |
|---|---|---|---|---|---|---|
| 11/01/17 | | | FDOT FY 2019-20 STANDARD PLANS | TYPE K TEMPORARY CONCRETE BARRIER SYSTEM | 102-110 | 6 of 17 |

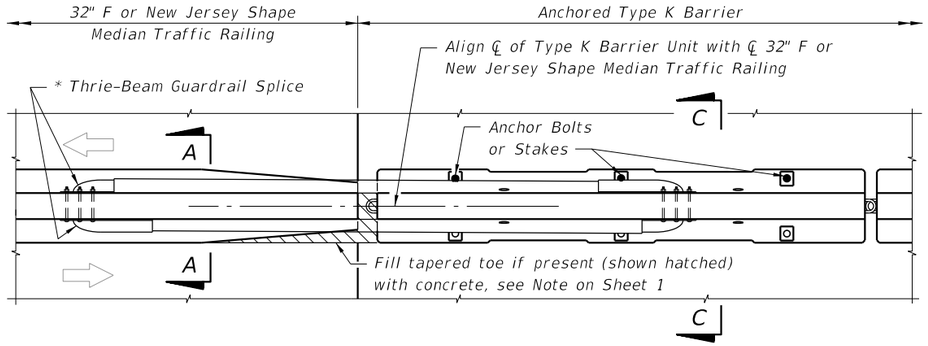


PARTIAL PLAN VIEW AT MEDIAN TRAFFIC RAILING

Cross References:
See Sheet 10 for Section A-A,
Section B-B and Section C-C.

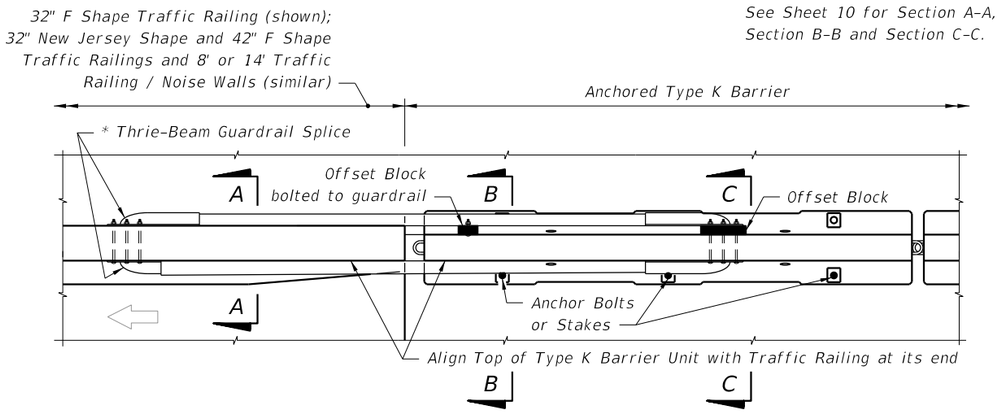


PARTIAL PLAN VIEW AT SHOULDER TRAFFIC RAILING

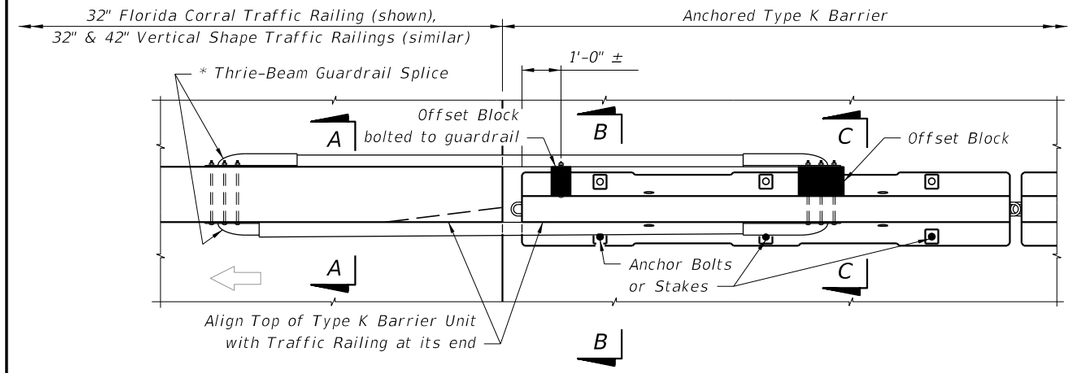


PARTIAL PLAN VIEW

Cross References:
See Sheet 10 for Section A-A,
Section B-B and Section C-C.

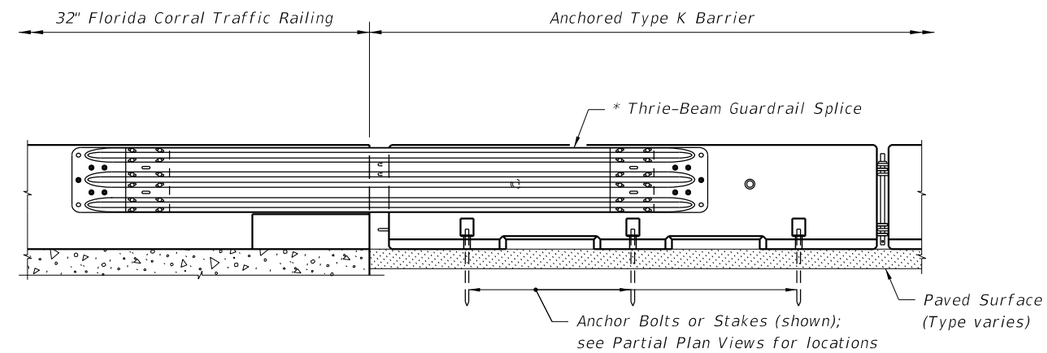


PARTIAL ELEVATION VIEW - FLORIDA CORRAL TRAFFIC RAILING

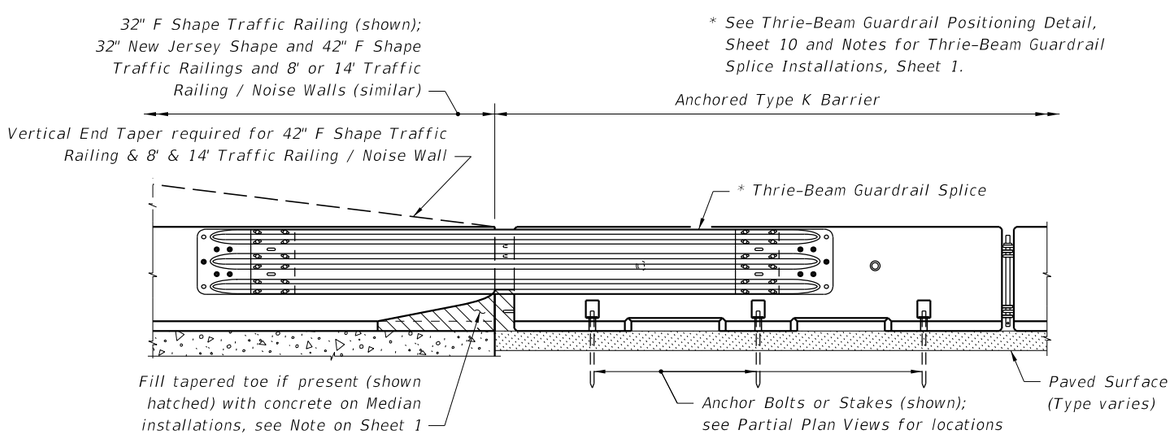


PARTIAL ELEVATION VIEW

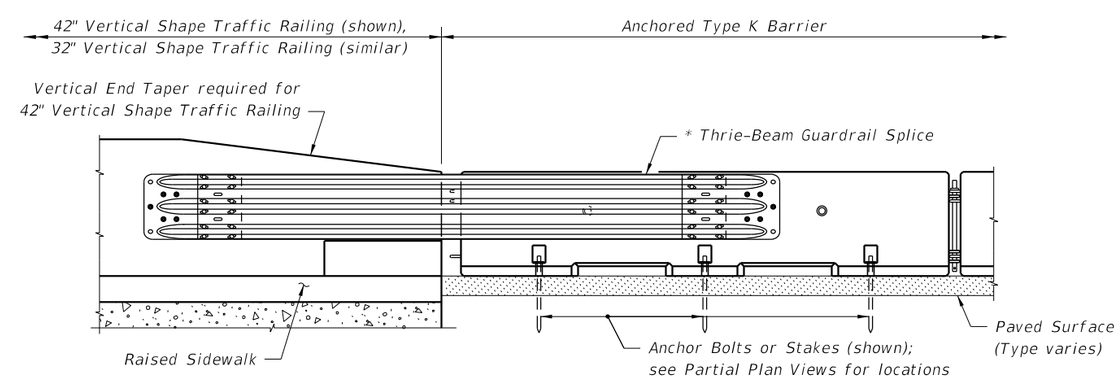


PARTIAL ELEVATION VIEW - VERTICAL SHAPE TRAFFIC RAILINGS

## APPROACH TRANSITION SPLICE DETAIL
## FOR F AND NEW JERSEY SHAPE TRAFFIC RAILINGS AND 8' & 14' TRAFFIC RAILING / NOISE WALLS (CONCRETE BARRIER WALL SIMILAR)

## APPROACH TRANSITION SPLICE DETAIL
## FOR FLORIDA CORRAL AND VERTICAL SHAPE TRAFFIC RAILINGS

9/18/2018 10:18:40 AM

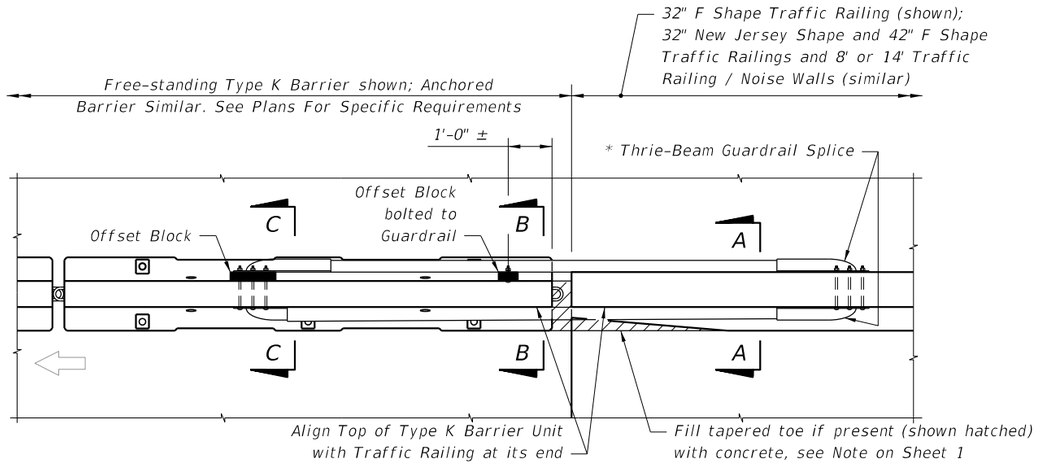


PARTIAL PLAN VIEW

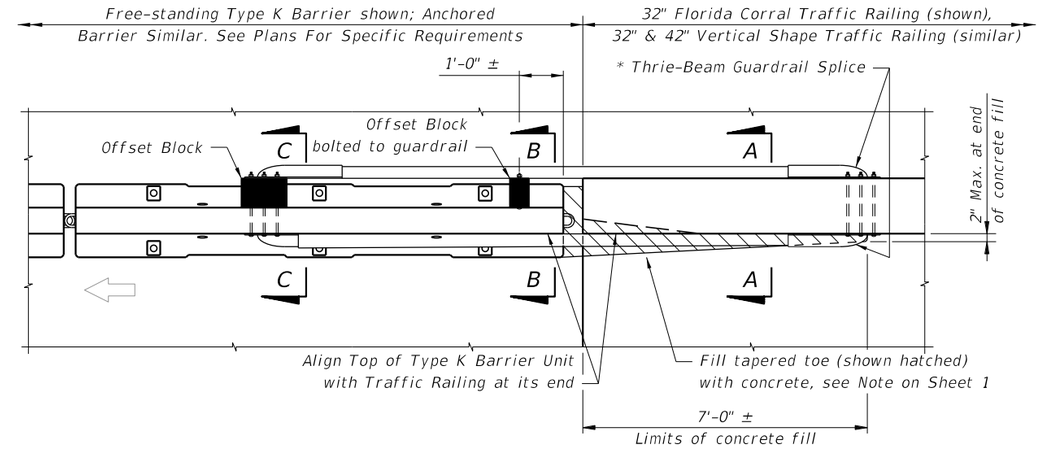


PARTIAL PLAN VIEW

* See Thrie-Beam Guardrail Positioning Detail, Sheet 10 and Notes for Thrie-Beam Guardrail Splice Installations, Sheet 1.

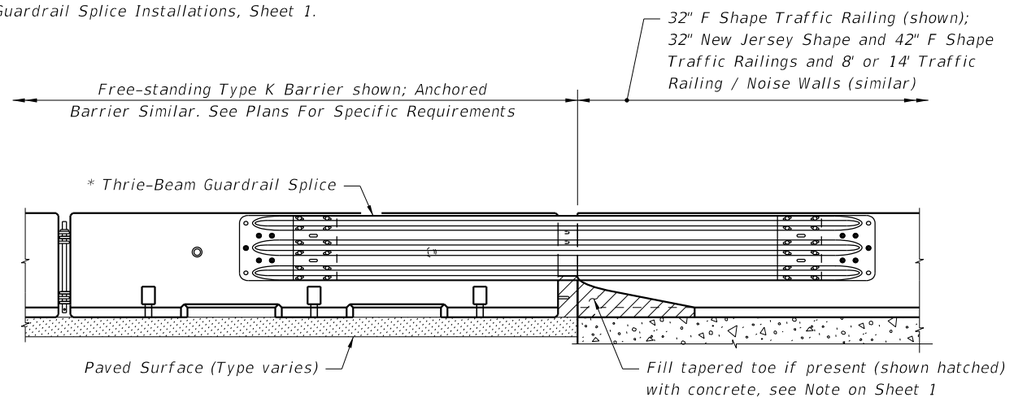


PARTIAL ELEVATION VIEW

Cross References:
See Sheet 10 for Section A-A,
Section B-B and Section C-C.

## TRAILING END SPLICE DETAIL
## FOR F AND NEW JERSEY SHAPE TRAFFIC RAILINGS AND 8' & 14' TRAFFIC RAILING / NOISE WALLS

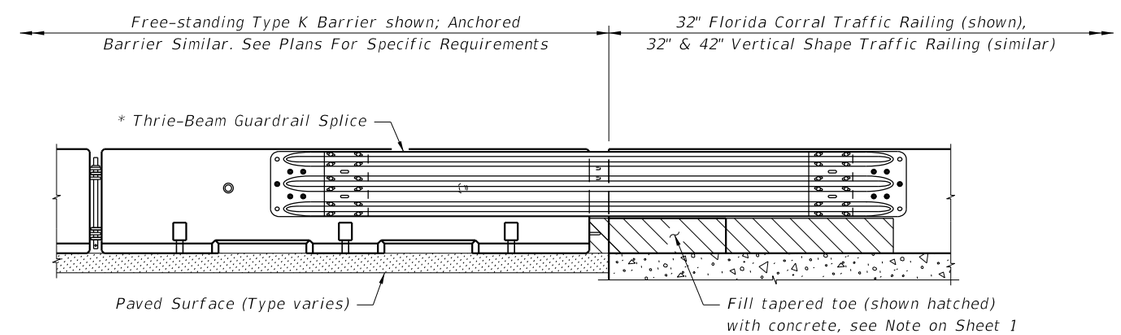


PARTIAL ELEVATION VIEW

Cross References:
See Sheet 10 for Section A-A,
Section B-B and Section C-C.

## TRAILING END SPLICE DETAIL
## FOR FLORIDA CORRAL AND VERTICAL SHAPE TRAFFIC RAILINGS

9/18/2018 10:18:41 AM

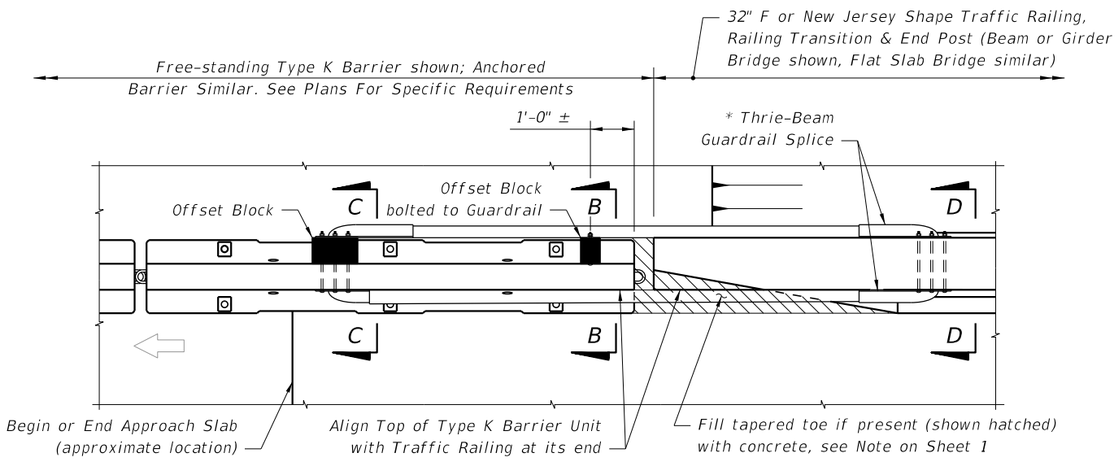


PARTIAL PLAN VIEW

* See Thrie-Beam Guardrail Positioning Detail, Sheet 10 and Notes for Thrie-Beam Guardrail Splice Installations, Sheet 1.

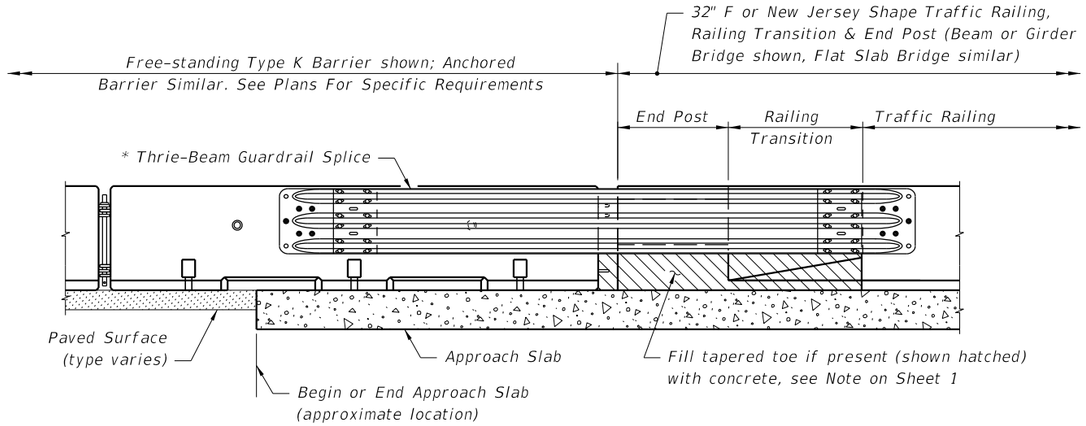


PARTIAL ELEVATION VIEW

Cross References:
See Sheet 10 for Section B-B, Section C-C and Section D-D.

## TRAILING END SPLICE DETAIL
## FOR 32" F AND NEW JERSEY SHAPE TRAFFIC RAILINGS WITH RAILING TRANSITION AND END POST

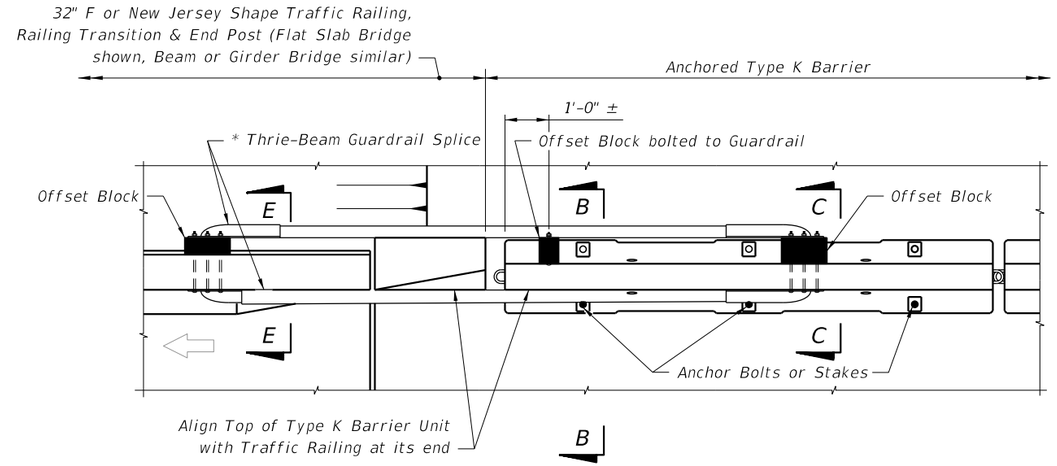


PARTIAL PLAN VIEW

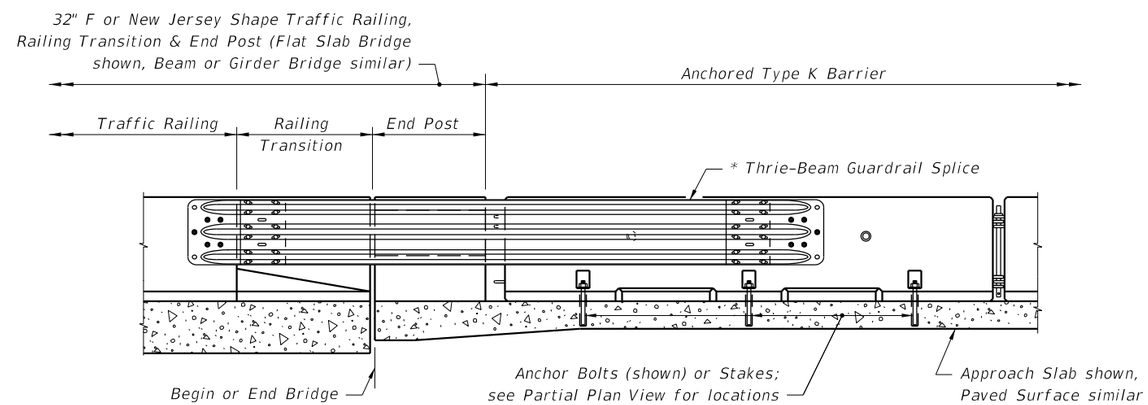


PARTIAL ELEVATION VIEW

Cross References:
See Sheet 10 for Section B-B, Section C-C and Section E-E.

## APPROACH TRANSITION SPLICE DETAIL
## FOR 32" F AND NEW JERSEY SHAPE TRAFFIC RAILINGS WITH RAILING TRANSITION AND END POST

9/18/2018 10:18:42 AM

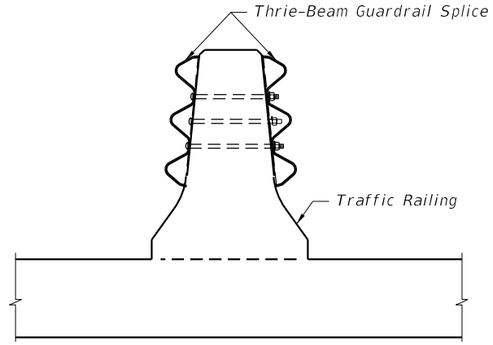


SECTION A-A
32" F Shape Median Traffic Railing (shown), Median Concrete Barrier Wall (similar)

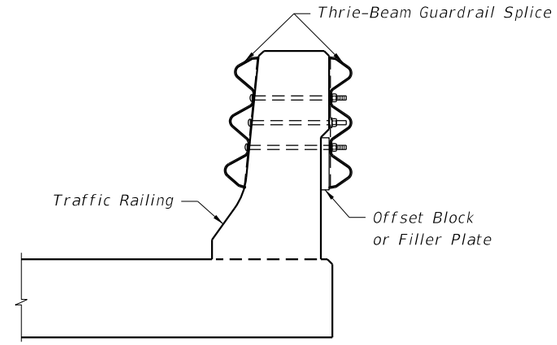


SECTION A-A
32" F Shape Traffic Railing (shown), 42" Traffic Railing and 8' & 14' Traffic Railing / Noise Walls (similar)

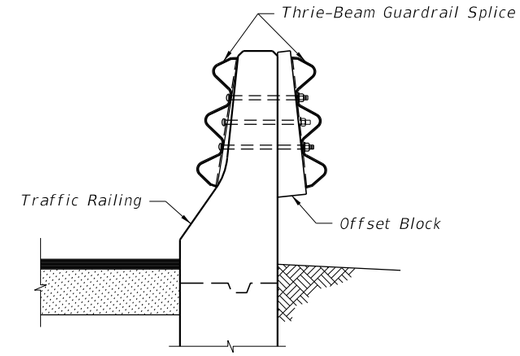


SECTION A-A
32" New Jersey Shape Concrete Barrier Wall (shown), 32" New Jersey Shape Traffic Railing & other Narrow Traffic Railings (similar)

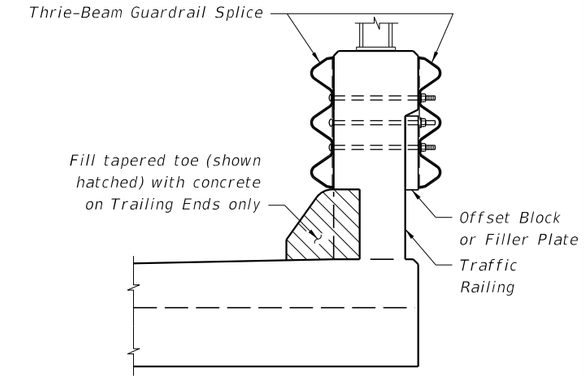


SECTION A-A
32" & 42" Vertical Shape Traffic Railing (shown), Florida Corral Traffic Railing (similar)

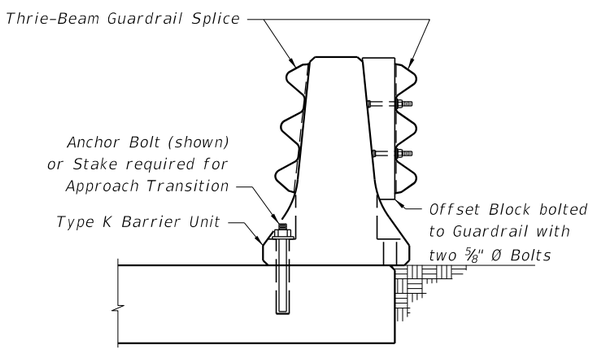


SECTION B-B
Adjacent to Shoulder Traffic Railings

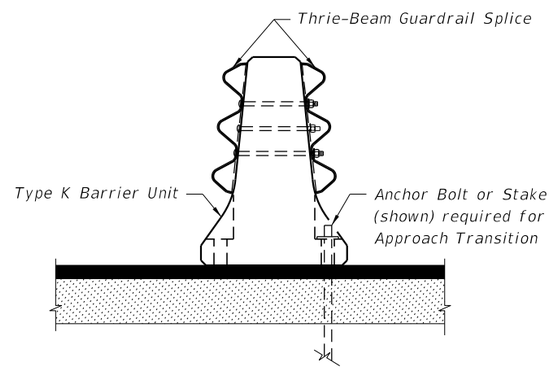


SECTION C-C
Adjacent to 32" F or New Jersey Shape Median Traffic Railing or Median Concrete Barrier Wall

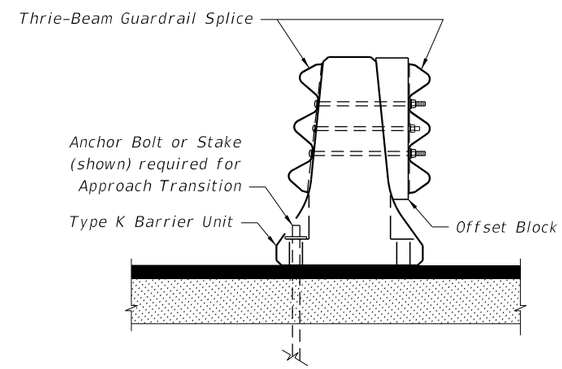


SECTION C-C
Adjacent to Shoulder Traffic Railings

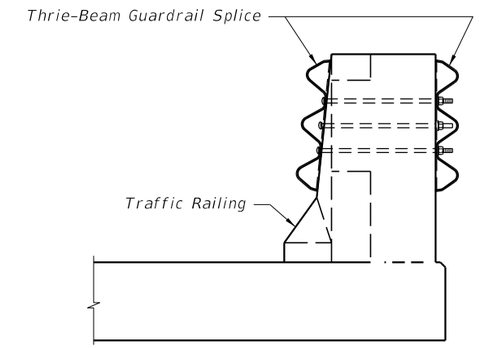


SECTION D-D
32" F or New Jersey Shape Traffic Railing, Railing Transition & End Post

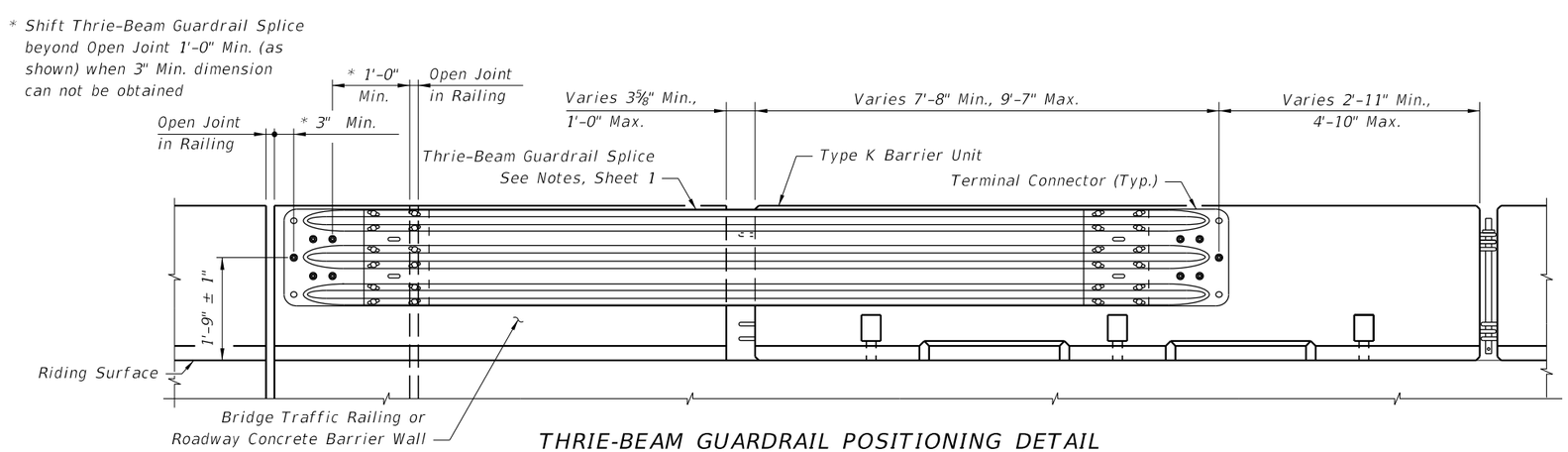


THRIE-BEAM GUARDRAIL POSITIONING DETAIL

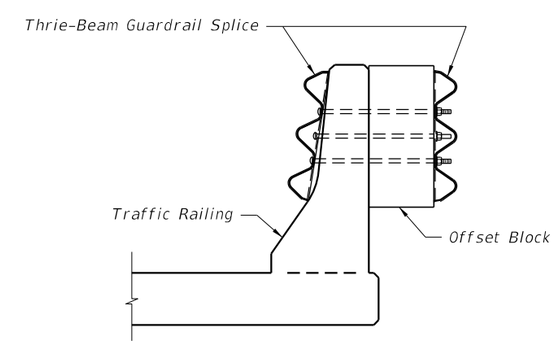


SECTION E-E
32" New Jersey Shape Traffic Railing (shown), 32" F Shape Traffic Railing (similar)

9/18/2018 10:18:42 AM

| LAST REVISION | REVISION | DESCRIPTION: | | | INDEX | SHEET |
|---|---|---|---|---|---|---|
| 11/01/17 | | | FDOT FY 2019-20 STANDARD PLANS | TYPE K TEMPORARY CONCRETE BARRIER SYSTEM | 102-110 | 10 of 17 |

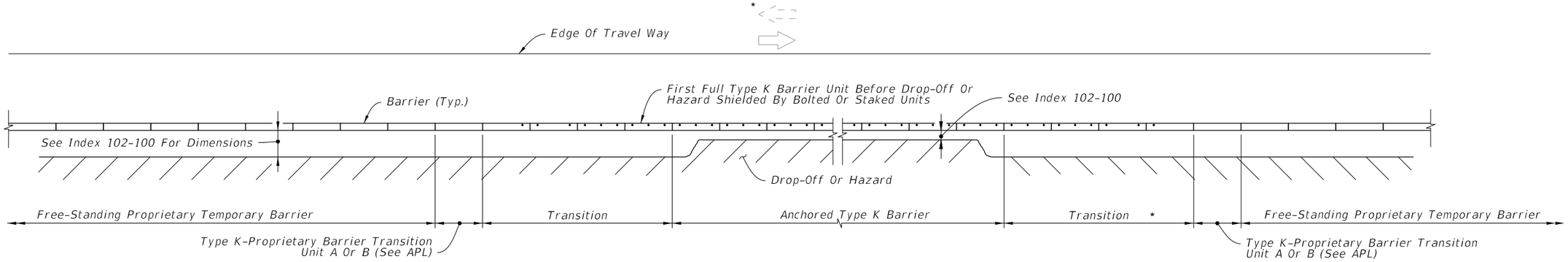


APPROACH TRANSITION FROM FREE-STANDING PROPRIETARY TEMPORARY BARRIERS TO ANCHORED TYPE K TEMPORARY CONCRETE BARRIERS

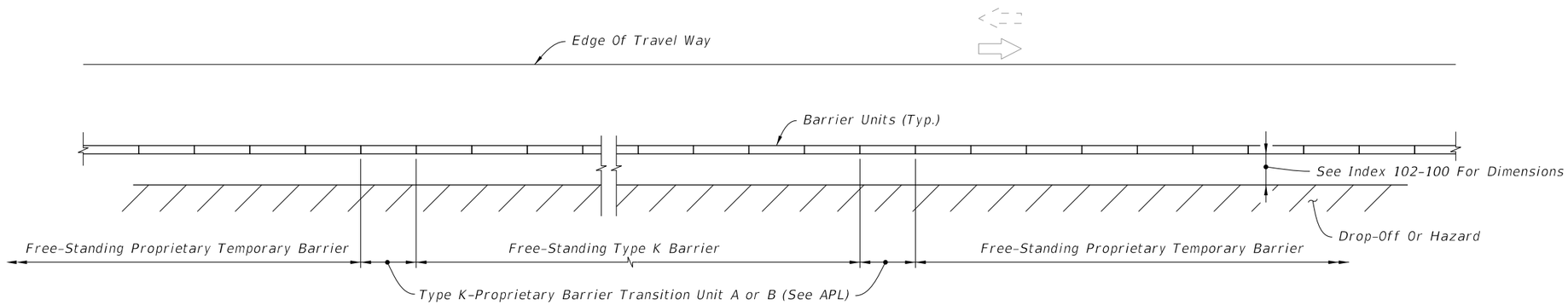


APPROACH AND TRAILING END TRANSITIONS FROM FREE-STANDING TYPE K TEMPORARY CONCRETE BARRIERS TO FREE-STANDING PROPRIETARY TEMPORARY BARRIERS

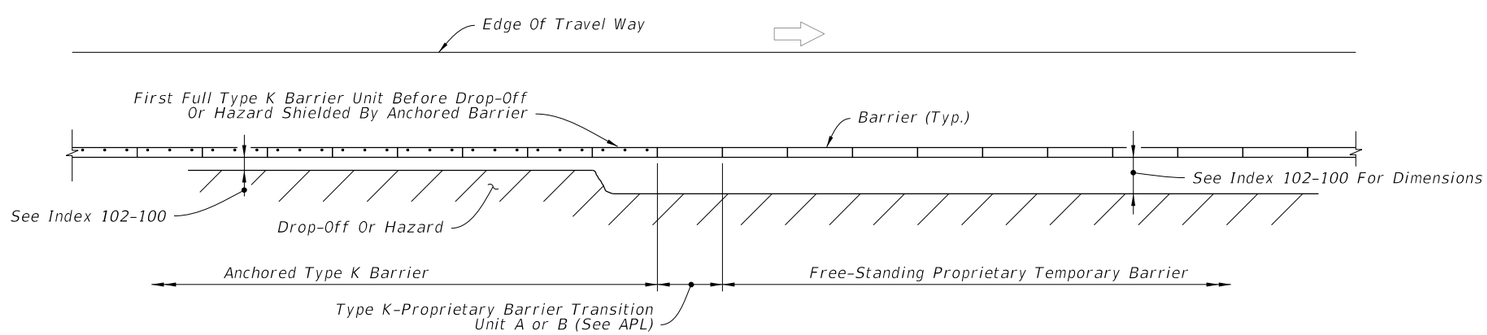


TRAILING END TRANSITION FROM ANCHORED TYPE K TEMPORARY CONCRETE BARRIERS TO FREE-STANDING PROPRIETARY TEMPORARY BARRIERS

* **NOTE:**

Where Barrier is located within Clear Zone of opposing traffic, Approach Transition is required.

**LEGEND:**

Dot indicates number and position of Bolts or Stakes

# TYPE K-PROPRIETARY TEMPORARY CONCRETE BARRIER TRANSITIONS

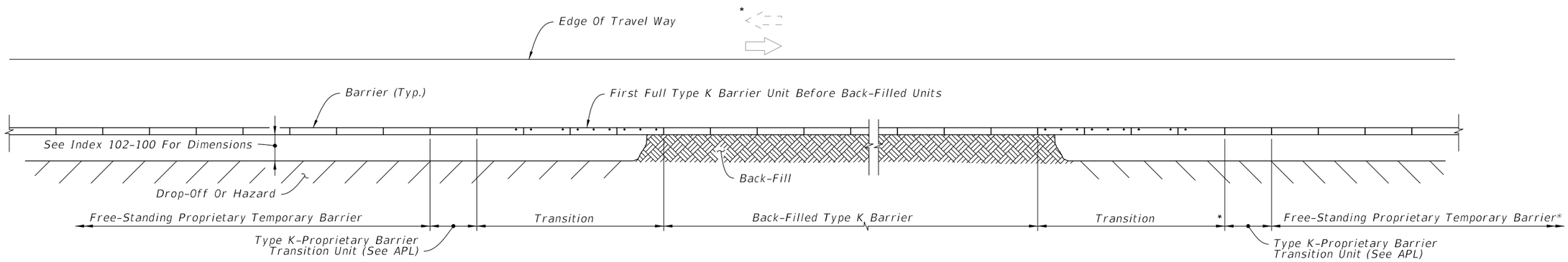


APPROACH TRANSITION FROM FREE-STANDING PROPRIETARY TEMPORARY BARRIERS TO BACK-FILLED TYPE K TEMPORARY CONCRETE BARRIERS

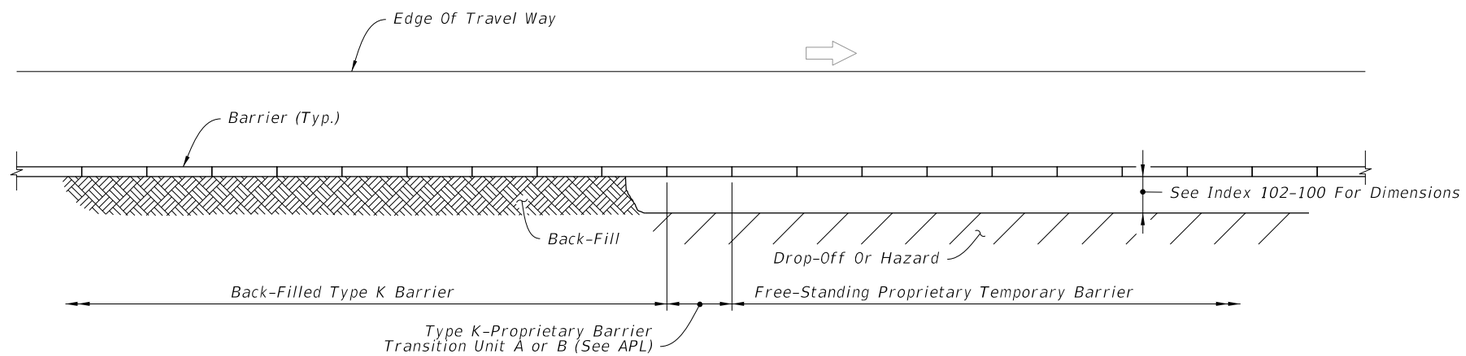


TRAILING END TRANSITION FROM BACK-FILLED TYPE K TEMPORARY CONCRETE BARRIERS TO FREE-STANDING PROPRIETARY TEMPORARY BARRIERS

NOTE:

Where Barrier is located within Clear Zone of opposing traffic, Approach Transition is required.

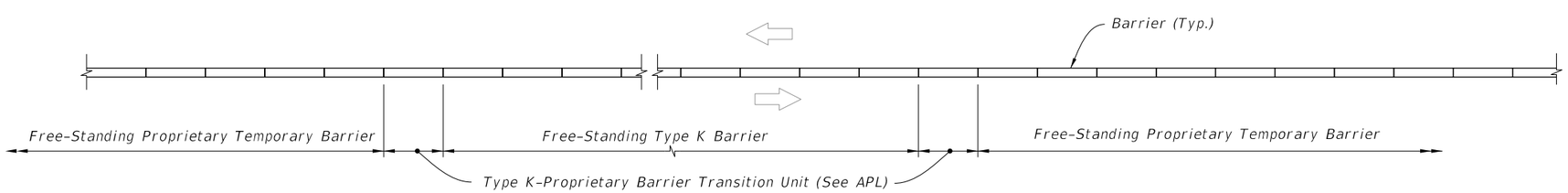


LEGEND:

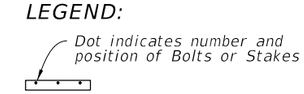


MEDIAN APPROACH AND TRAILING END TRANSITIONS FROM FREE-STANDING TYPE K TEMPORARY CONCRETE BARRIERS TO FREE-STANDING PROPRIETARY TEMPORARY BARRIERS

## TYPE K-PROPRIETARY TEMPORARY CONCRETE BARRIER TRANSITIONS

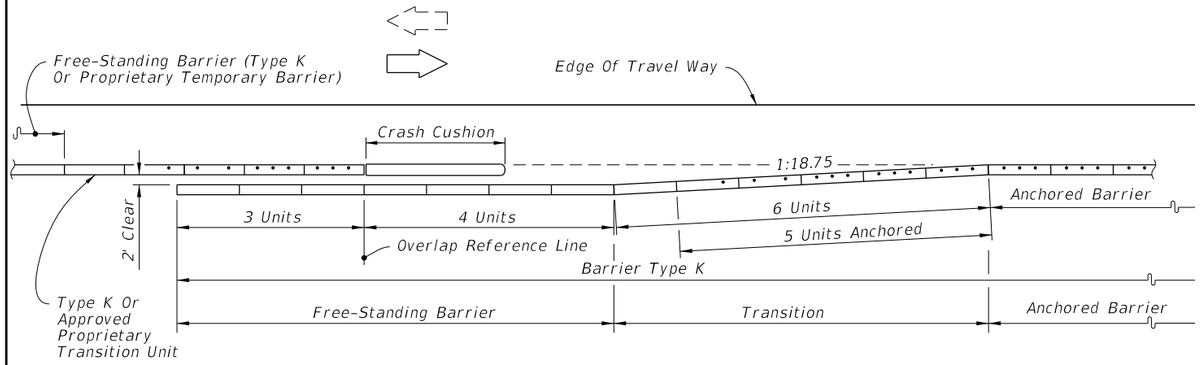


APPROACH SHOULDER BARRIER ON UNDIVIDED FACILITIES

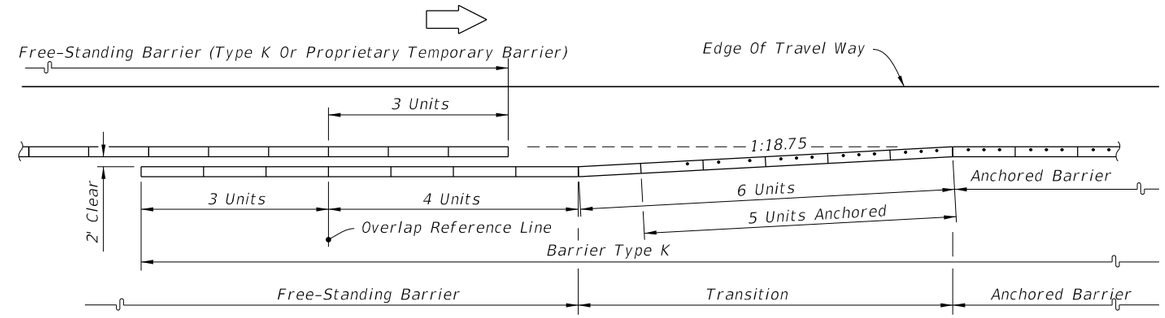


APPROACH SHOULDER BARRIER ON DIVIDED FACILITIES

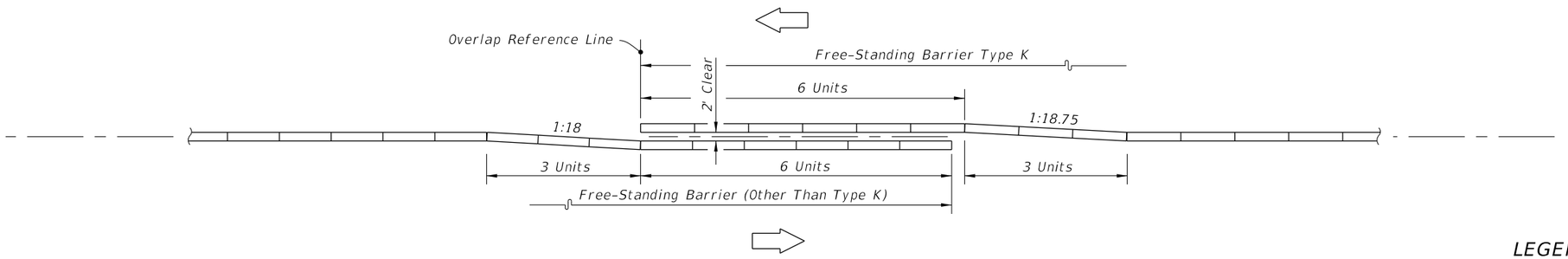


INTERIOR MEDIAN BARRIER

LEGEND

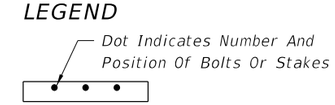


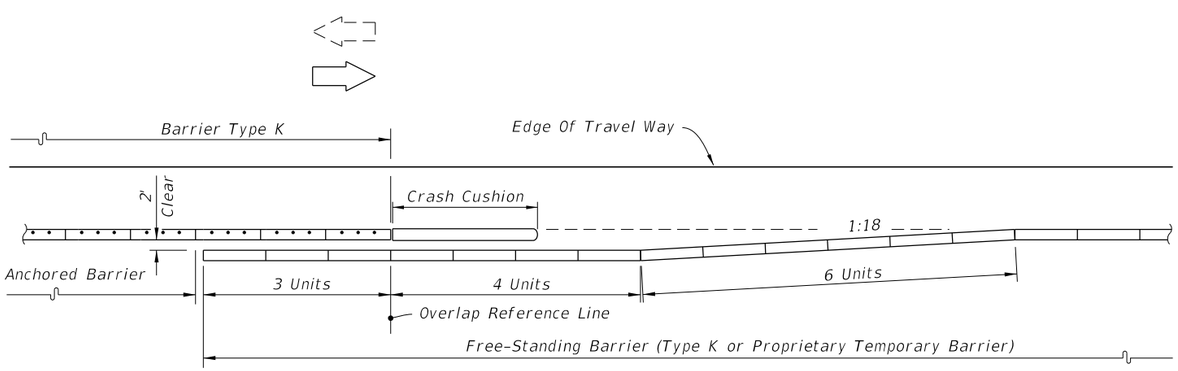


DEPARTURE (TRAILING) SHOULDER BARRIER ON UNDIVIDED FACILITIES
(BARRIER TYPE K ON BRIDGES AND APPROACH SLABS)

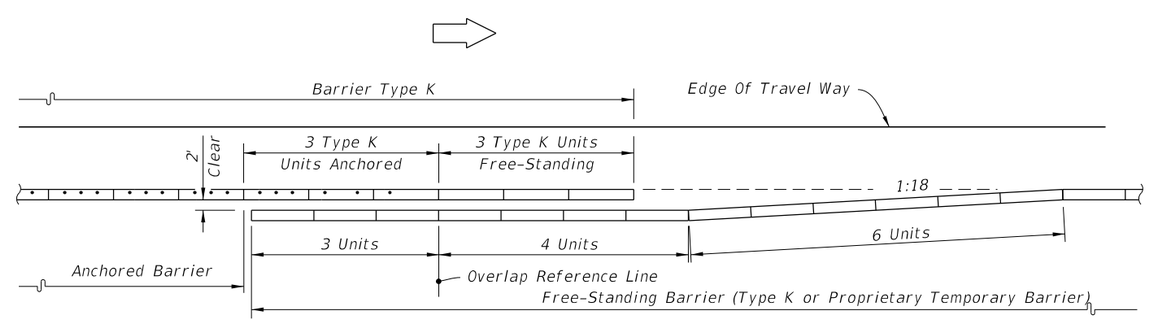


DEPARTURE (TRAILING) SHOULDER BARRIER ON DIVIDED FACILITIES
(BARRIER TYPE K ON BRIDGES AND APPROACH SLABS)

CONTINUATION OF BARRIER • FROM OTHER TYPE BARRIERS TO BARRIER TYPE K

9/18/2018 10:18:44 AM

| LAST REVISION | REVISION | DESCRIPTION: | | | INDEX | SHEET |
|---|---|---|---|---|---|---|
| 11/01/17 | | | FDOT FY 2019-20 STANDARD PLANS | TYPE K TEMPORARY CONCRETE BARRIER SYSTEM | 102-110 | 13 of 17 |

## NOTE:

When subjected to reverse direction hits, construct Transition Panels from Temporary Barrier to Crash Cushions; for additional details refer to the applicable crash cushion drawings on the APL.

## LEGEND:

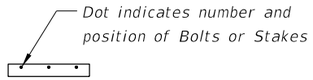


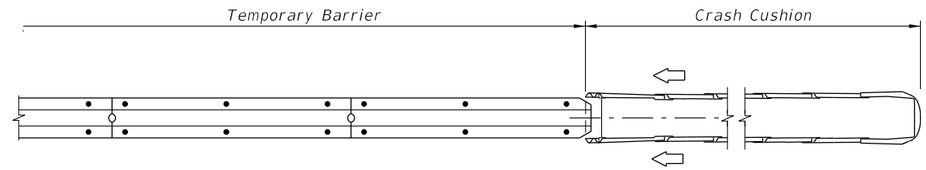


UNIDIRECTIONAL - SEPARATED TRAFFIC

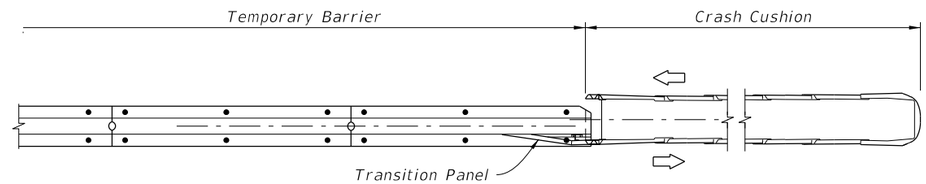


BIDIRECTIONAL - SEPARATED TRAFFIC

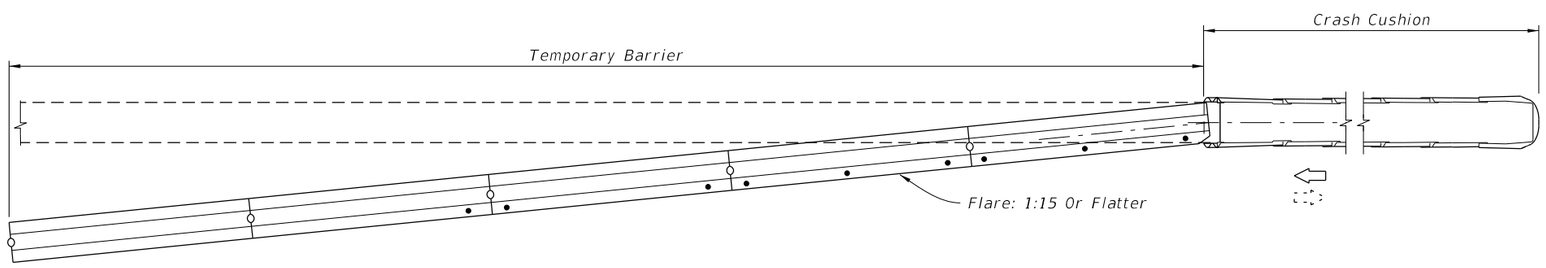


TWO-WAY TRAFFIC WITH CRASH CUSHION LOCATED
OUTSIDE OPPOSING LANE CLEAR ZONE OR ONE-WAY TRAFFIC

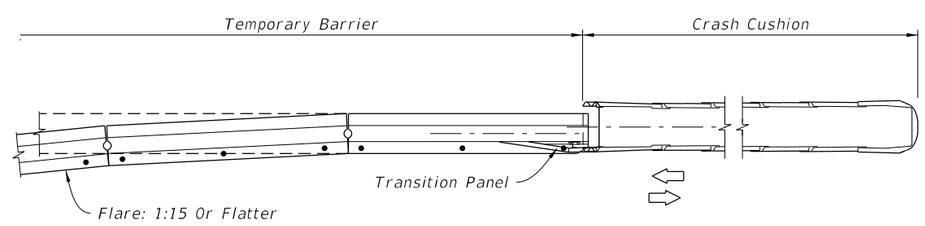


TWO-WAY TRAFFIC WITH CRASH CUSHION LOCATED WITHIN OPPOSING LANE CLEAR ZONE

END TREATMENT WHEN SHIELDED BY A CRASH CUSHION

SHOULDER - RIGHT OR LEFT (RIGHT SIDE SHOWN)

# SHIELDING ENDS WITH REDIRECTIVE CRASH CUSHIONS (REDIRECTIVE OPTION)

FABRICATION NOTES:

In order to maintain crashworthiness of the Barrier System, do not substitute different grades, sizes, shapes or types of reinforcing steel for those shown for constructing Type K Barrier Units. Also, do not substitute different type, size, length or material grade anchor bolts, nuts, washers, adhesives, connector pins, stakes, keeper pins, or guardrail components for installing Type K Barrier Units.

FABRICATOR PREQUALIFICATIONS:

A. The Concrete Plant that meets the requirements;
   a. Specifications 450 for prestressed concrete
   b. Specification 105 for precast.

CONCRETE:

A. Construct Barrier Units with Class IV concrete in accordance with Specification 346.
B. Specification 346-10.2 through 346-10.4 are not applicable.
C. Barrier Units represented by concrete acceptance strength tests which fall below 5000 psi will be rejected.

REINFORCING STEEL:

A. Use only steel reinforcing that meet ASTM A 615, Grade 60, with the exception of Bars 6D1, 6D2 and 6D3.
B. Bars 6D1, 6D2 and 6D3 use steel reinforcing that meets ASTM A 706, with the exception that a 2¾" diameter pin must be used for the 180 degree bend test.
C. After steel reinforcing fabrication, hot dip galvanized in accordance with Specification 962 or coated with a cold galvanizing compound in accordance with Specification 562, all or part of Bars 6D.
D. At the Fabricator's option, the entire length of Bars 6D may be galvanized or coated.
E. The minimum limit of galvanizing or coating is shown in the Bending Diagrams.
F. Install Bars 6D within ⅛" of the plan dimensions.
G. Correct placement of Bars 6D is critical for proper fit up and performance of individual Barrier Units.
H. At the option of the Fabricator, Deformed Welded Wire Fabric in accordance with Specification Section 931 and the details shown on Sheet 15 may be utilized in lieu of Bars 4A and 5B.
I. All dimensions in the Bending Diagrams are out to out.
J. Install all reinforcing steel with a 2" minimum cover, except as noted.

LIFTING SLEEVE ASSEMBLY:

A. Inclusion of the Lifting Sleeve Assemblies is optional.
B. Use steel in accordance with ASTM A 53 for the Pipe Sleeve.
C. Hot-dip galvanize the Lifting Sleeve Assemblies after their fabrication in accordance with the Specifications.

SURFACE FINISH:

A. Construct Barrier Units in accordance with Specification Sections 400 and 521.
B. Finish the top and sides of the Barrier Units with a General Surface Finish.
C. Finish the bottom of the Barrier Units to a dense uniform surface by floating in lieu of the General Surface Finish.
D. Use stationary metal forms or stationary timber forms with a form liner.

MARKING:

A. Permanently mark the top left end of each Barrier Unit by the use of an embedded and anchored metallic plate with letters and figures a minimum of 0.5" tall.
B. Ink stamps are not allowed.
C. Permanently mark with the following information:
   - Type K1
   - Fabricator's name or symbol
   - Date of manufacture (day, month and year)

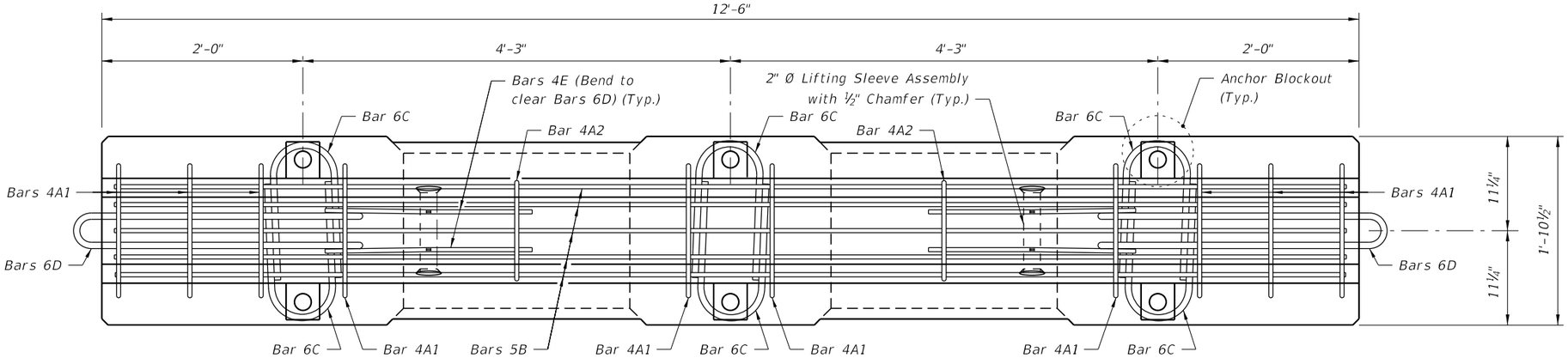


PLAN VIEW

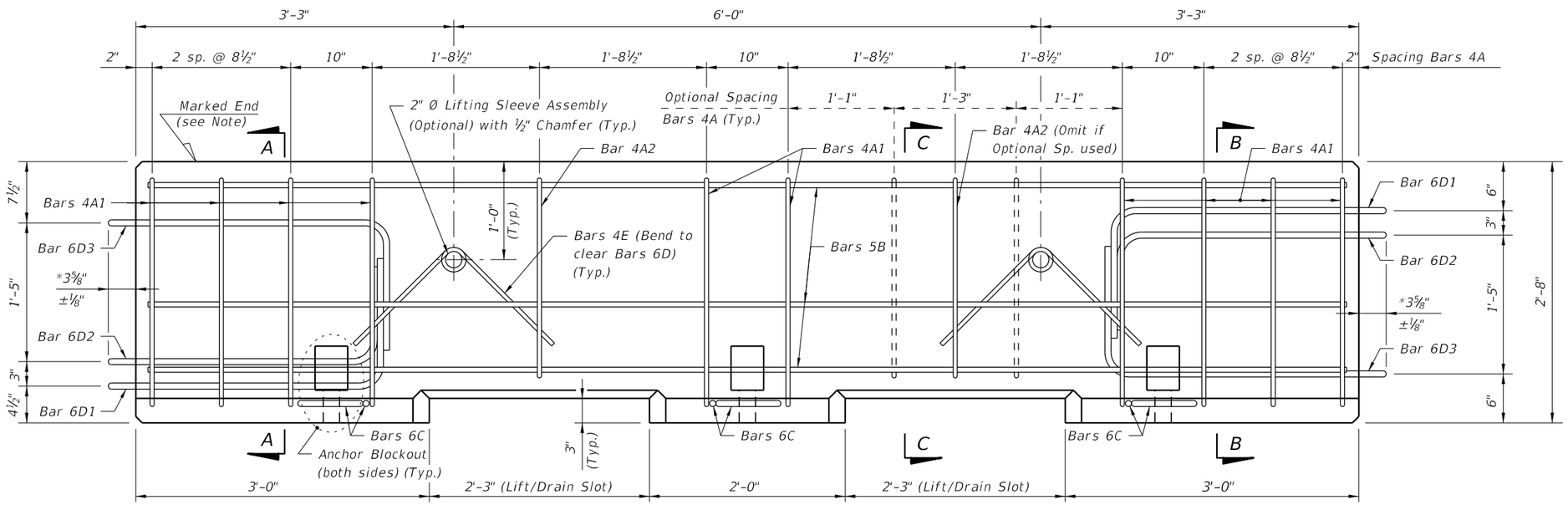


ELEVATION VIEW

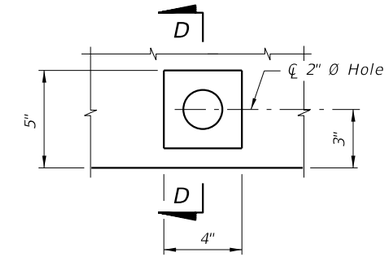


ANCHOR BLOCKOUT DETAIL

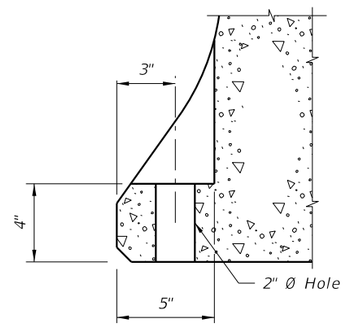


SECTION D-D
(Reinforcement not shown for clarity)

* Measured from end of Barrier Unit to outside edge of Bars 6D.

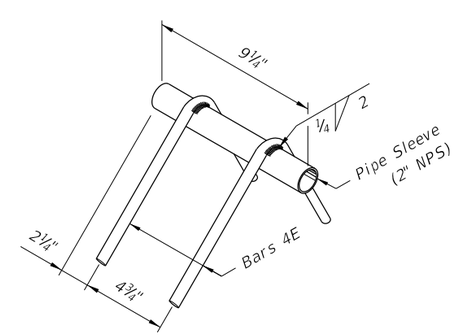


LIFTING SLEEVE
ASSEMBLY DETAIL (OPTIONAL)

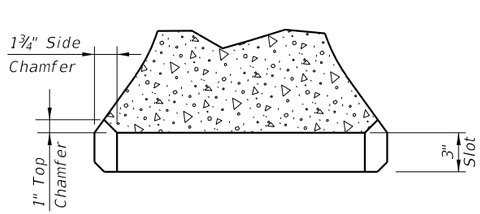


SECTION THRU LIFT/DRAIN SLOT

| ESTIMATED TEMPORARY CONCRETE BARRIER QUANTITIES | | |
|---|---|---|
| ITEM | UNIT | QUANTITY |
| Concrete | CY | 1.29 |
| Reinforcing Steel | LB | 218 |

The above quantities are for one Barrier Unit.

Cross References:
For Section A-A, Section B-B and Section C-C see Sheet 16.

9/18/2018 10:18:45 AM

| LAST REVISION | REVISION | DESCRIPTION: | | | INDEX | SHEET |
|---|---|---|---|---|---|---|
| 11/01/17 | | | FY 2019-20 STANDARD PLANS | TYPE K TEMPORARY CONCRETE BARRIER SYSTEM | 102-110 | 16 of 17 |

## ALTERNATE REINFORCING STEEL DETAIL
## WELDED WIRE REINFORCEMENT

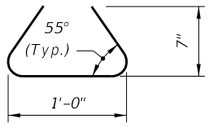


NO. 4 DRAIN BAR OVER DRAIN SLOTS (CONVENTIONAL STEEL)

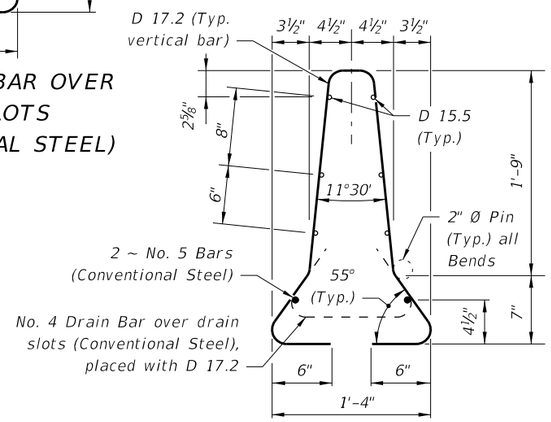


NOTES:
Place 2 ~ No. 5 Bars (12'-3" long) in bottom of Welded Wire Reinforcement cage as shown.
Match D17.2 spacing to Bars 4A in the Elevation View, Sheet 15.
Field trim D17.2 to clear drain slot by 2".

CONFIGURATION ONE

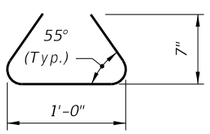


NO. 4 DRAIN BAR OVER DRAIN SLOTS (CONVENTIONAL STEEL)

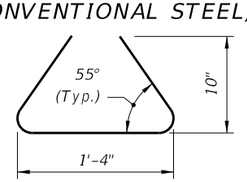


NO. 4 TYPICAL BAR (CONVENTIONAL STEEL)

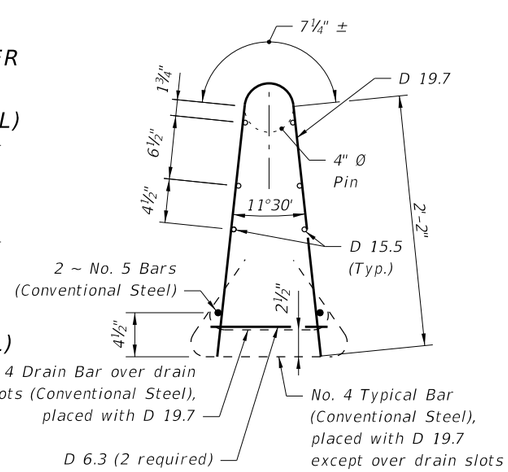


NOTES:
Place 2 ~ No. 5 Bars (12'-3" long) tied to D 19.7 inside of bottom Welded Wire Reinforcement cage as shown.
Match D19.7 spacing to Bars 4A in the Elevation View, Sheet 15.
Field trim D19.7 to clear drain slot by 2".

CONFIGURATION TWO

## CONVENTIONAL REINFORCING STEEL BENDING DIAGRAMS

### BILL OF REINFORCING STEEL

| MARK | SIZE | NUMBER | LENGTH |
|---|---|---|---|
| A1 | 4 | 10 | 6'-1" |
| A2 | 4 | 2 | 5'-5" |
| B | 5 | 5 | 12'-3" (Straight) |
| C | 6 | 6 | 3'-1" |
| D1 | 6 | 2 | 8'-4" |
| D2 | 6 | 2 | 7'-6" |
| D3 | 6 | 2 | 8'-6" |
| E | 4 | 4 | 2'-0" |

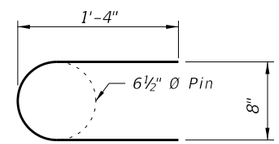


BAR 6C

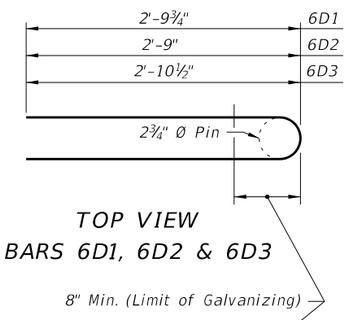


TOP VIEW
BARS 6D1, 6D2 & 6D3

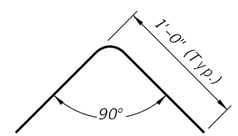


BAR 4E

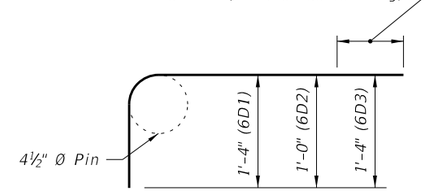


SIDE VIEW
BARS 6D1, 6D2 & 6D3

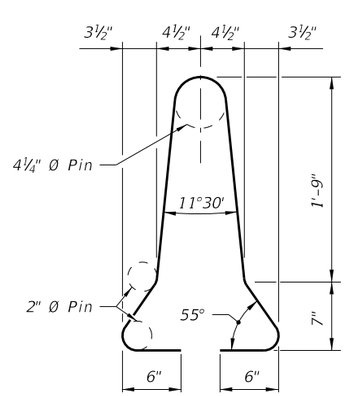


STIRRUP BAR 4A1

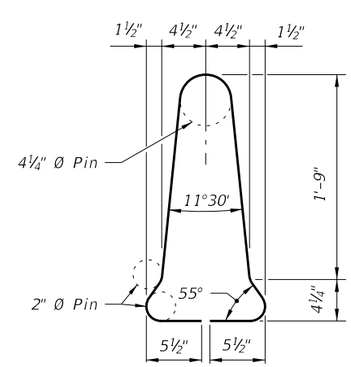


STIRRUP BAR 4A2

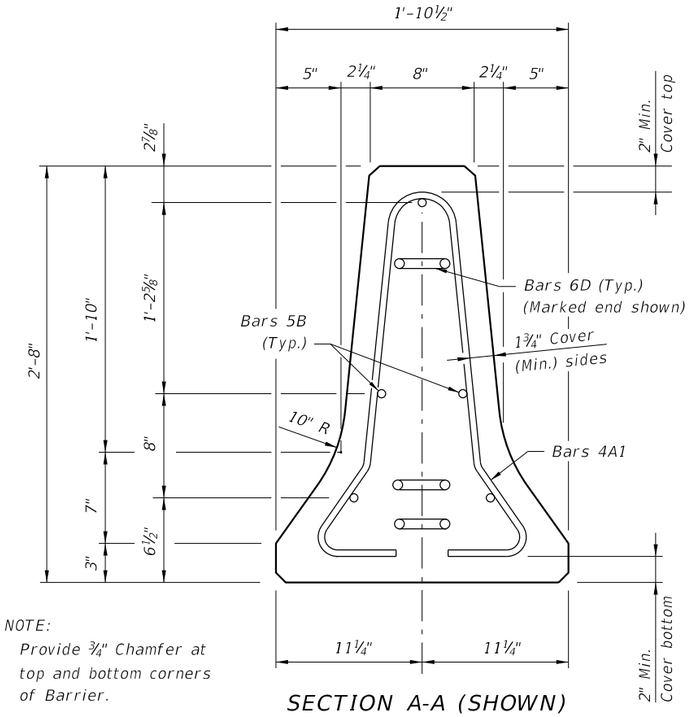


NOTE:
Provide ¾" Chamfer at top and bottom corners of Barrier.

SECTION A-A (SHOWN)
(SECTION B-B SIMILAR)

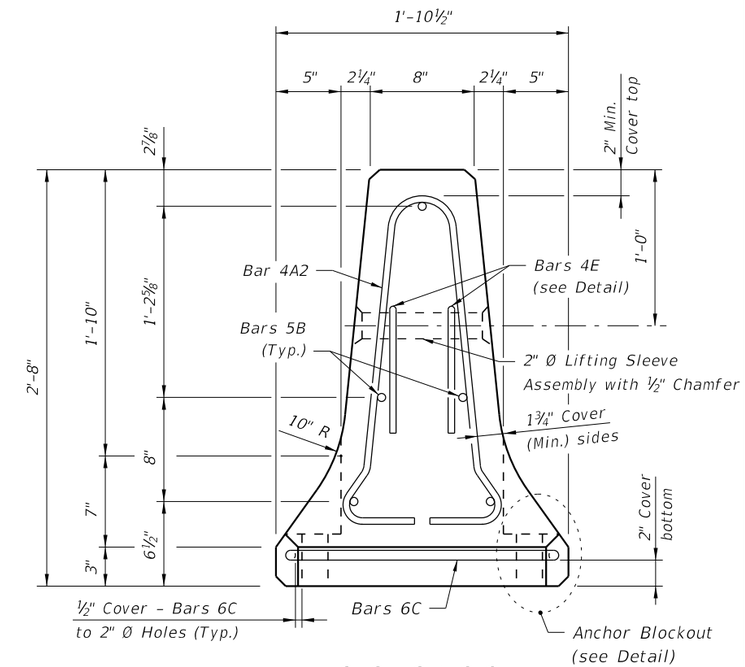


SECTION C-C
(Bars 6D not shown for clarity)

| LAST REVISION | REVISION | DESCRIPTION: | | | INDEX | SHEET |
|---|---|---|---|---|---|---|
| 11/01/17 | | | FY 2019-20 STANDARD PLANS | TYPE K TEMPORARY CONCRETE BARRIER SYSTEM | 102-110 | 17 of 17 |

9/18/2018 10:18:47 AM