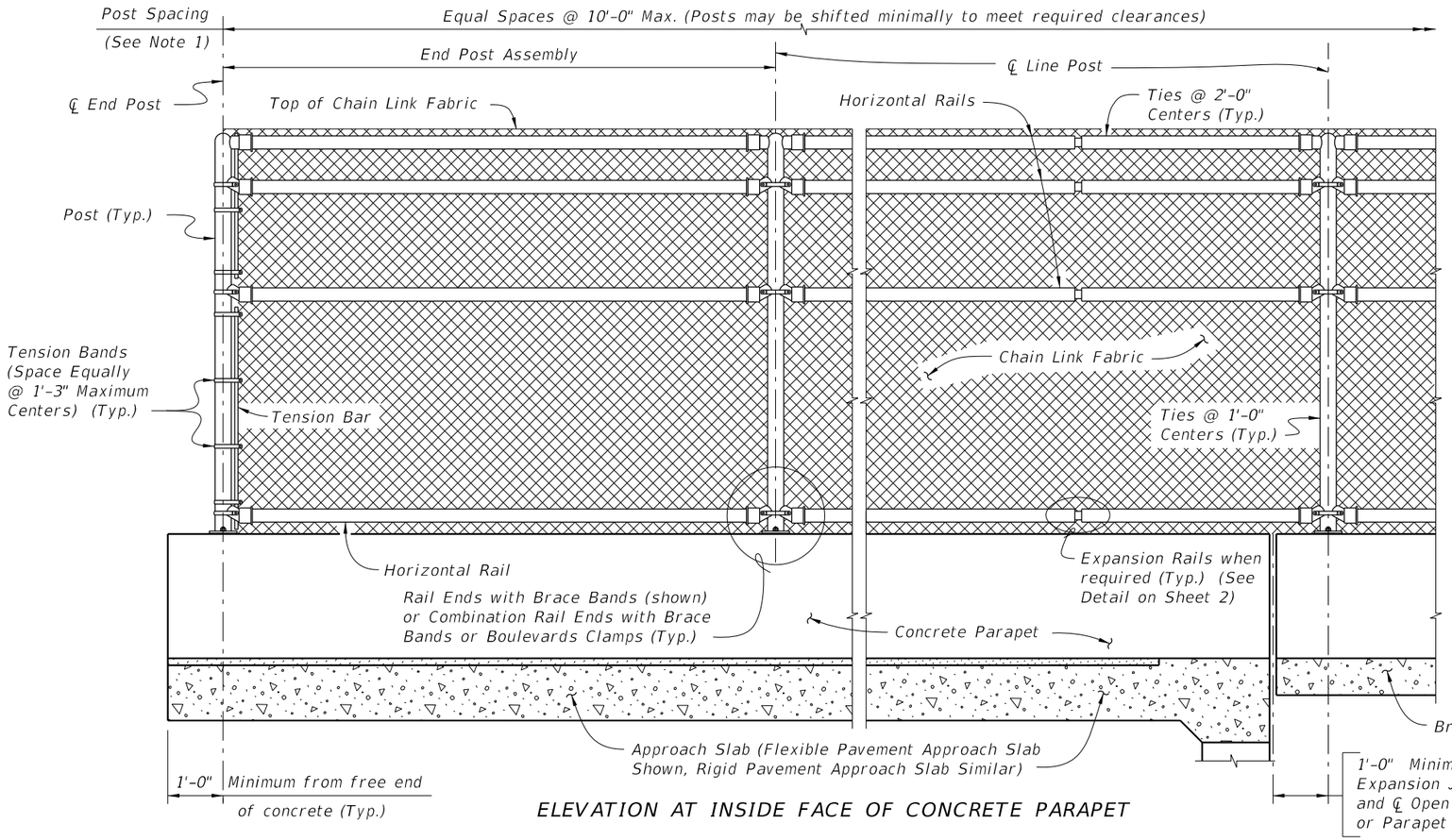

ELEVATION AT INSIDE FACE OF CONCRETE PARAPET

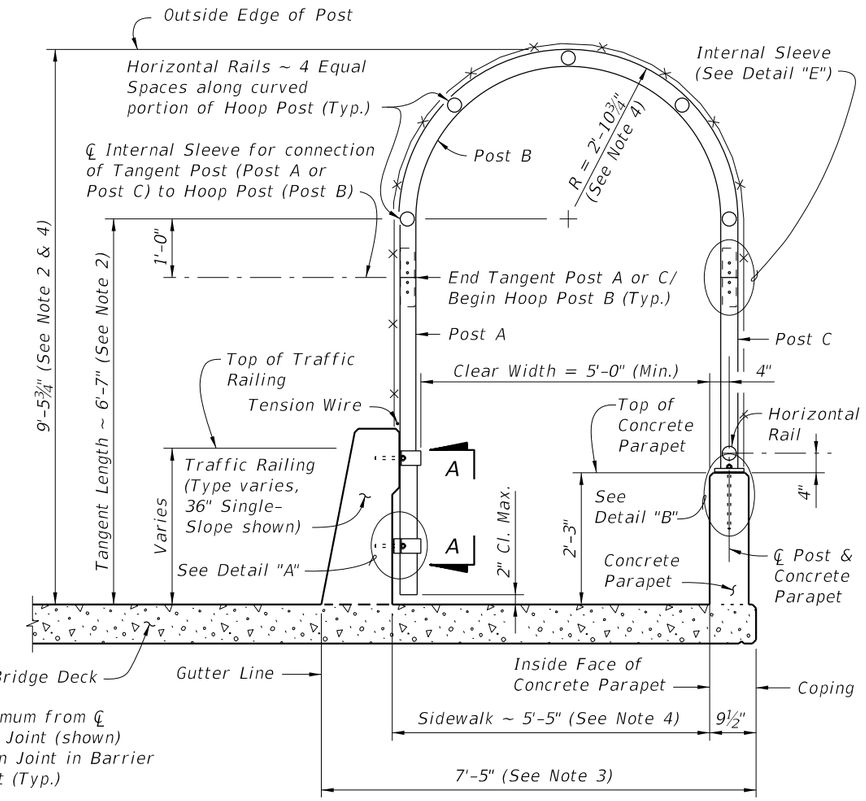

TYPICAL SECTION

NOTES:

1. A Pull Post Assembly is required at maximum intervals of 500'-0". See Sheet 3.
2. Dimension is measured along Inside Face of Concrete Parapet.
3. Dimension shown is for 36" Single-Slope Traffic Railings as shown in Index 521-427. Adjust as required for other Traffic Railing Barriers and sidewalk widths.
4. For sidewalk clear widths greater than 5'-0", increase the radius and height of the curved portion of the Hoop Post at the rate of 6" for every one foot increase in sidewalk width.

FENCING NOTES

FENCE INSTALLATION:
Install posts plumb (within a tolerance of ± 1½"). Use shim plates as required to achieve plumb. The required quantity and thickness of shim plates will be determined in the field. Install chain link fence in accordance with ASTM F567 as applicable.

TRAFFIC RAILING DETAILS:
See Superstructure Sheets for Traffic Railing details.

CONCRETE PARAPET DETAILS:
See Index 521-820 - Pedestrian/Bicycle Railing for Concrete Parapet details. Provide fencing in lieu of aluminum bullet railing as shown on Index 521-820.

LIMITS OF FENCING:
Limits of fencing are from begin of approach slab at Begin Bridge to end of approach slab at End Bridge, unless otherwise shown in the plans.

PAYMENT:
Payment will be made under Fencing, Type R. Payment includes posts, horizontal and expansion rails, brace bands, rail ends, combination rail ends, boulevard clamps, chain link fabric, tension wire, ties, hog rings, tension bars and bands, pipe clamps, base plates, anchor rods, bolts, nuts, washers, shim plates, spacers, neoprene pads, miscellaneous fence fittings and hardware and all incidental materials and labor required to complete installation of the fence.

CROSS REFERENCE:
For Table of Fence Components and Table of Post Attachment Components see Sheet 2.
For Pull Post Assembly Detail, View A-A and Detail "A" see Sheet 3.
For Detail "B" and "E" see Sheet 4.

TABLE OF CHAIN LINK FENCE COMPONENTS		
COMPONENT	ASTM DESIGNATION	COMPONENT INFORMATION
Posts	F1083	Galvanized Steel Pipe – 3" NPS, Schedule 40 Regular Grade
Horizontal Rails and Internal Sleeves	F1083	Galvanized Steel Pipe – 2½" NPS, Schedule 40 Regular Grade
Expansion Rails	F1083	Galvanized Steel Pipe – 2" NPS, Schedule 40 Regular Grade
Chain Link Fabric (2" mesh with knuckled bottom selvages)	A392	Zinc Coated Steel – 9 gage (coated wire diameter), Class 2 Coating
	A491	Aluminum Coated Steel – 9 gage (coated wire diameter)
	F668	Polyvinyl Chloride (PVC) Coated Steel – 9 gage Class 2b Zinc Coated Wire
Tension Wire	A824 & A817	Type II (Zinc Coated Steel Wire) – 7 gage, Class 4 Coating
		Type I (Aluminum Coated Steel Wire) – 7 gage
Tie Wires	F626	Zinc Coated Steel Wire – 9 gage
Hog Rings	F626	Zinc Coated Steel Wire – 12 gage
Brace Bands	F626	12 gage (Min. thickness) x ¾" (Min. width) Steel Bands (Beveled or Heavy)
Tension Bars	F626	3/16" (Min. thickness) x ¾" (Min. width) x Variable Height Steel Bars ~ Height = Tangent or Hoop Length – Barrier or Parapet Height – 2" max.
Tension Bands	F626	14 gage (Min. thickness) x ¾" (Min. width) Steel Bands
Miscellaneous Fence Components	F626	Zinc Coated Steel ~ (includes horizontal rail ends, combination rail ends, boulevard clamps and all other miscellaneous fittings and hardware)
Bolts	A307	⅜" Ø x 4¼" Hex Head Bolts for Internal Sleeve connections ¼" Ø x 4¼" Hex Head Bolts for Expansion Rail connections
Nuts	A563	Hex Nuts for Internal Sleeve and Expansion Rail connections
Washers	F436	Flat Washers for Internal Sleeve and Expansion Rail connections

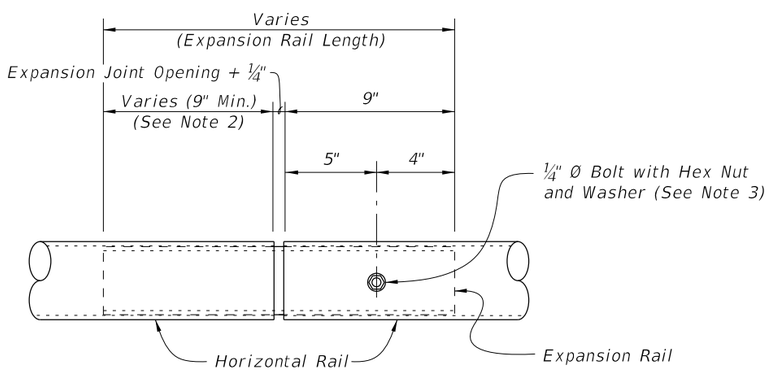

EXPANSION RAIL DETAIL

NOTES:

1. Expansion Rails are required at expansion joint locations where the total movement exceeds 1". Install expansion rails midway between the fence posts spanning the expansion joint.
2. An Expansion Assembly is required where the total joint movement exceeds 6". Expansion Assembly includes Expansion Rails and two pull posts (see Sheet 3). When the Expansion Joint Opening is greater than 9" add an additional length to the free end of the Expansion Rail equal to the difference between the Expansion Joint Opening and 9".
3. Install nut for the expansion rail finger-tight. The nut will fully engage bolts with a minimum of one bolt thread extending beyond the nuts. Distort the first thread on the outside of the nut to prevent loosening.

TABLE OF POST ATTACHMENT COMPONENTS			
COMPONENT		ASTM DESIGNATION	COMPONENT INFORMATION
Pipe Clamps		A36 or A709 Grade 36	¼" Steel PL
Base Plates		A36 or A709 Grade 36	¾" Steel PL
Shim Plates		A36 or A709 Grade 36 or B209 Alloy 6061-T6 or B221 Alloy 6063-T5	Plate thicknesses as required; Holes in shim plates will be ¾" Ø
Spacers		–	Plate thickness varies based on Traffic Railing type. (See Detail "A")
Pipe Clamp Connection	Adhesive Anchor Rods	F1554 Grade 36	Fully threaded Headless Anchor Rods ~ ⅝" Ø x 6" (no spacer) or ⅝" Ø x (6" + spacer thickness)
	C-I-P Anchor Rods	F1554 Grade 36	Hex Head Anchor Rods ~ ⅝" Ø x 6" (no spacer) or ⅝" Ø x (6" + spacer thickness)
Base Plate Connection	Adhesive Anchor Rods	F1554 Grade 36	Fully threaded Headless Anchor Rods ~ ⅞" Ø x 14½"
	C-I-P Anchor Rods	F1554 Grade 36	Hex Head Anchor Rods ~ ⅞" Ø x 14½"
Bolts		A307	⅜" Ø x 4¾" Hex Head Bolts for Pipe Clamp Connections to Posts
Nuts		A563	Hex Nuts for Pipe Clamp and Base Plate Connections
Washers		F436	Flat Washers for Pipe Clamp and Base Plate Connections
Bearing Pads (Plain)		–	In accordance with Specification Section 932 for Ancillary Structures

POST ATTACHMENT NOTES

ANCHOR RODS, NUTS AND WASHERS:
After the nuts have been tightened, distort the Anchor Rod threads to prevent removal of the nuts. Coat distorted threads and exposed trimmed ends of anchors with a galvanizing compound in accordance with Specification Section 562.

COATINGS:
Hot-dip galvanize all Nuts, Washers, Bolts, C-I-P Anchor Rods, Adhesive Anchors and Fence Framework (Posts, Internal Sleeves, Shim Plates, Base Plates, Pipe Clamps and Spacers) in accordance with Specification Section 962. Hot-dip galvanize Fence Framework after fabrication.

ADHESIVE-BONDED ANCHORS AND DOWELS:
Adhesive Bonding Material Systems for Anchors and Dowels will comply with Specification Section 937 and be installed in accordance with Specification Section 416. Cutting of reinforcing steel is permitted for drilled hole installation.

WELDING:
All welding will be in accordance with the American Welding Society Structural Welding Code (Steel) ANSI/AWS D1.1 (current edition). Weld metal will be E60XX or E70XX. Nondestructive testing of welds is not required.

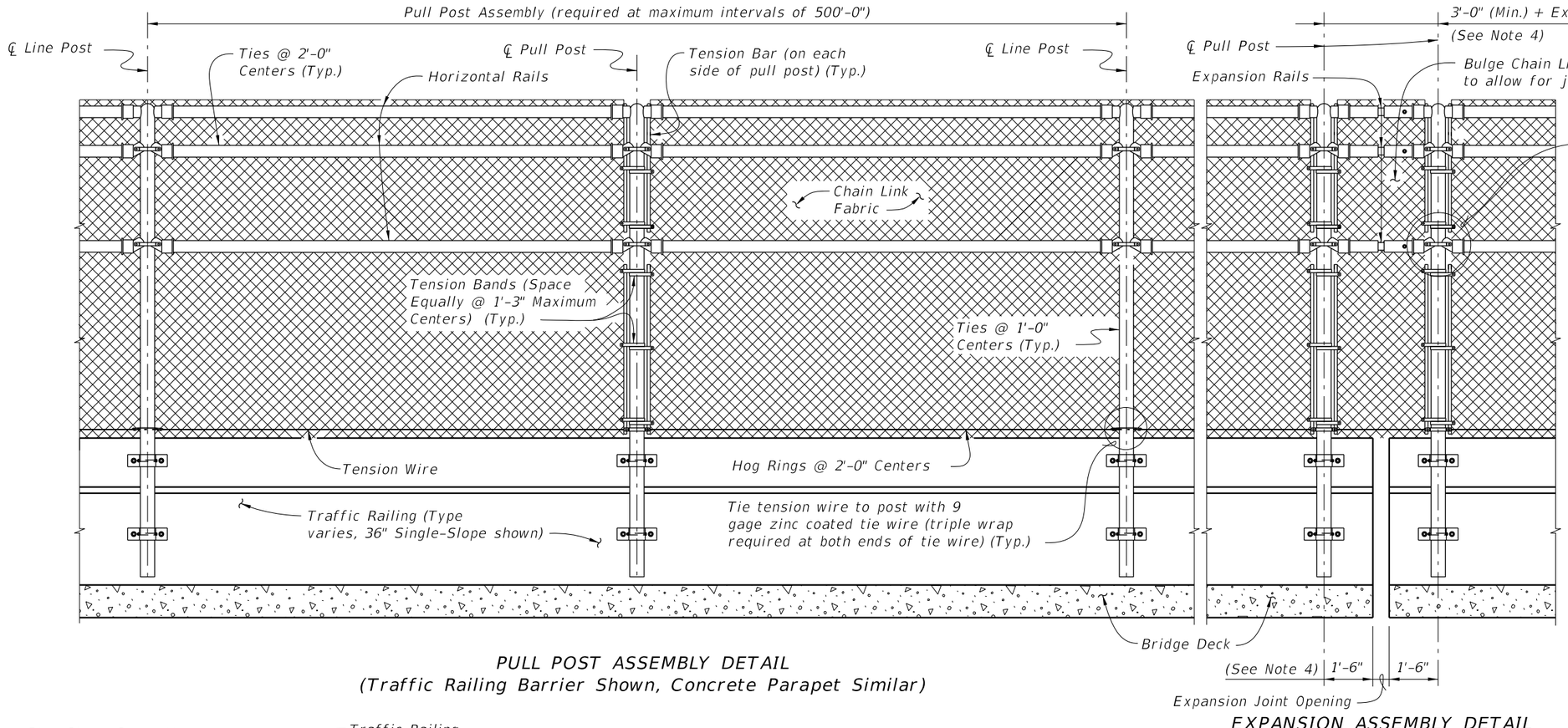

PULL POST ASSEMBLY DETAIL
(Traffic Railing Barrier Shown, Concrete Parapet Similar)

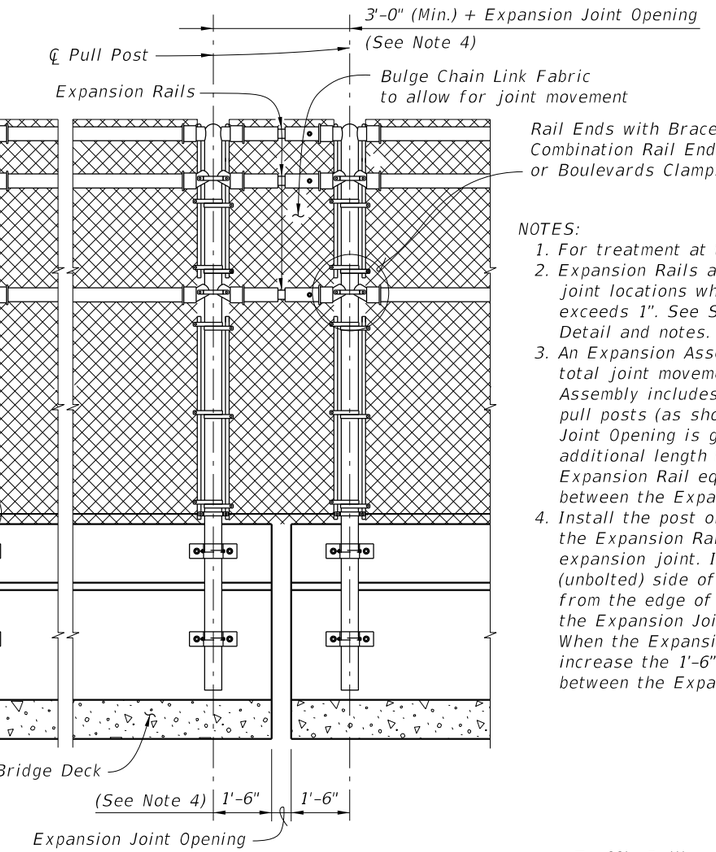

EXPANSION ASSEMBLY DETAIL
(Required only at expansion joint locations where total movement exceeds 6")

NOTES:

1. For treatment at the bridge ends, see Sheet 1.
2. Expansion Rails are required at expansion joint locations where the total movement exceeds 1". See Sheet 2 for Expansion Rail Detail and notes.
3. An Expansion Assembly is required where the total joint movement exceeds 6". Expansion Assembly includes Expansion Rails and two pull posts (as shown). When the Expansion Joint Opening is greater than 9" add an additional length to the free end of the Expansion Rail equal to the difference between the Expansion Joint Opening and 9".
4. Install the post on the fixed (bolted) side of the Expansion Rail 1'-6" from the edge of the expansion joint. Install the post on the slip (unbolted) side of the Expansion Rail 1'-6" from the edge of the expansion joint unless the Expansion Joint Opening is greater than 9". When the Expansion Joint Opening exceeds 9" increase the 1'-6" dimension by the difference between the Expansion Joint Opening and 9".

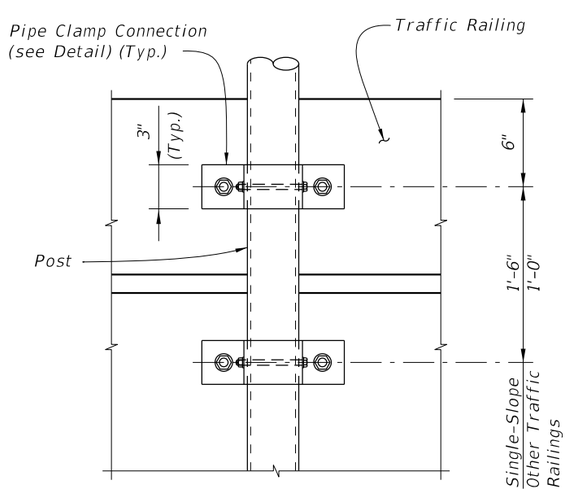

VIEW A-A

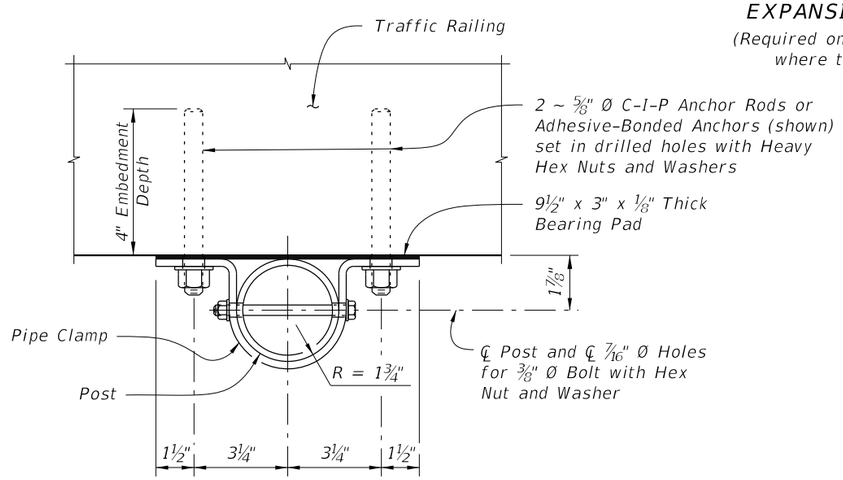

PIPE CLAMP CONNECTION DETAIL
(Connection without spacer shown, Connection with spacer similar)

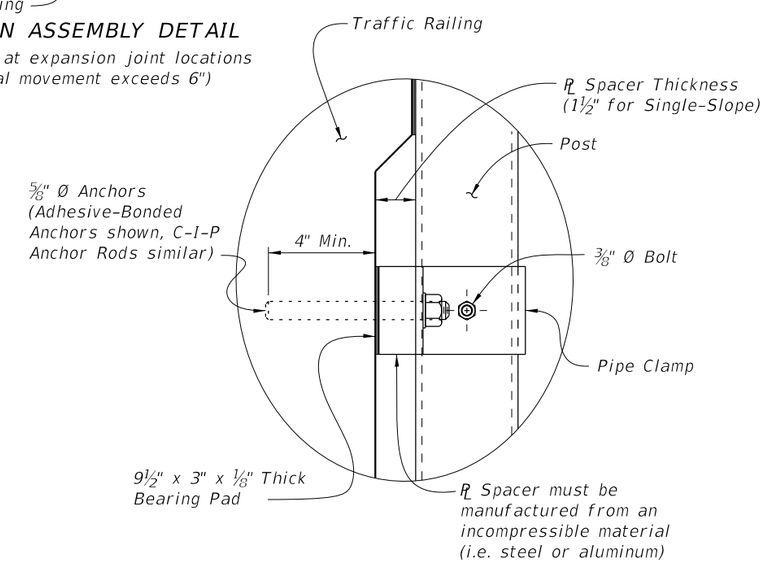

DETAIL "A"

CROSS REFERENCE:
For location of View A-A and Detail "A" see Sheet 1.

10/25/2017 3:45:48 PM

LAST REVISION	REVISION	DESCRIPTION:			INDEX	SHEET
11/01/17			FDOT FY 2018-19 STANDARD PLANS	BRIDGE FENCING (ENCLOSED)	550-012	3 of 4

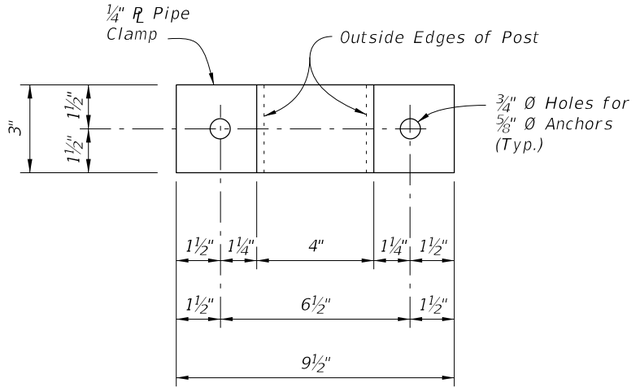

PIPE CLAMP DETAIL

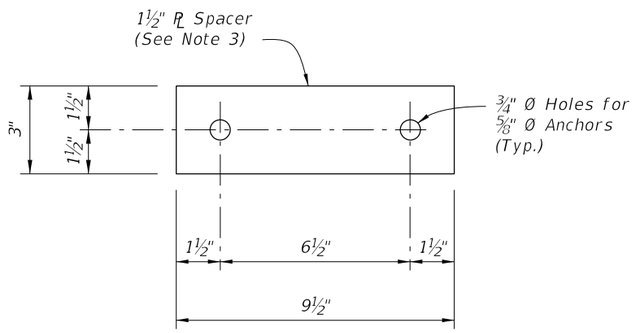

SPACER DETAIL

(Must be manufactured from an incompressible material (i.e. steel or aluminum))

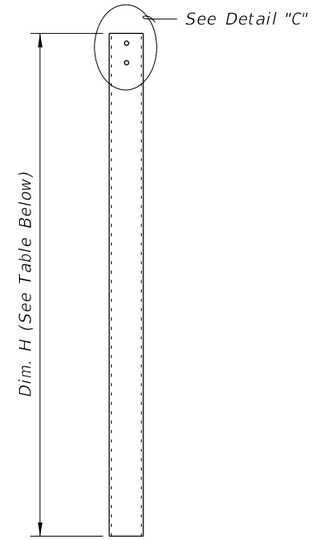

POST A DETAIL

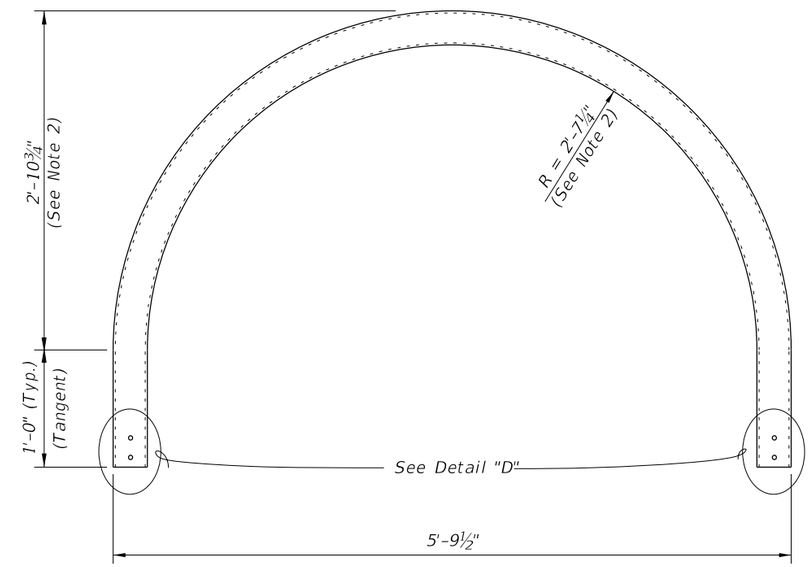

POST B DETAIL

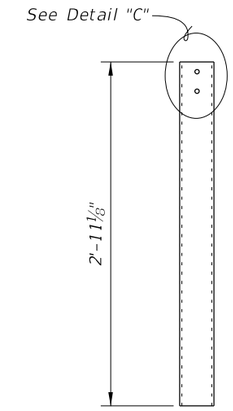

POST C DETAIL

SIDEWALK CROSS-SLOPE	DIM. H (See Note 1)
2% Left	5'-6¼"
2% Right	5'-3¾"

NOTES:
1. Values shown for Dim. H are for a 5'-0" clear sidewalk width. Adjust as required for clear sidewalk widths greater than 5'-0".
2. For clear sidewalk widths greater than 5'-0" increase radius and height by 6" for every one foot increase in sidewalk width.
3. Spacer plate thickness shown is for Single-Slope Traffic Railings. Adjust thickness as required for other Traffic Railings.

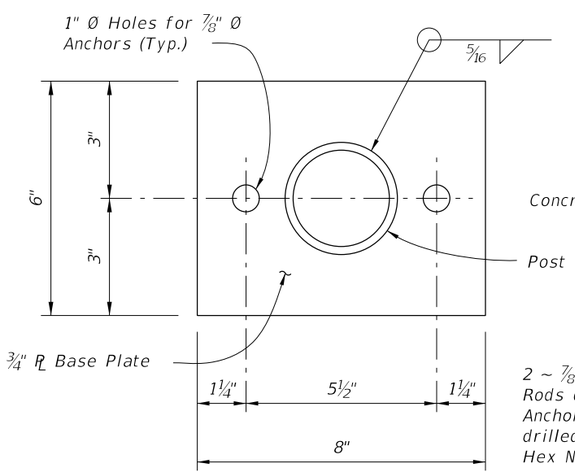

BASE PLATE DETAIL

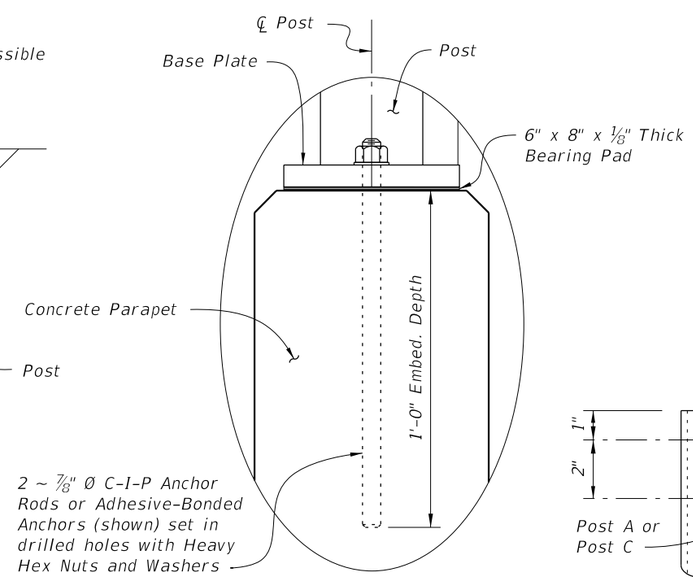

DETAIL "B"

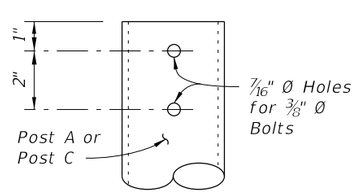

DETAIL "C"

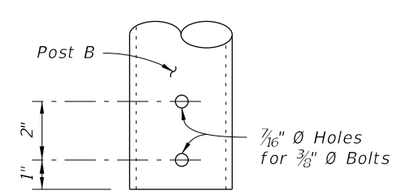

DETAIL "D"

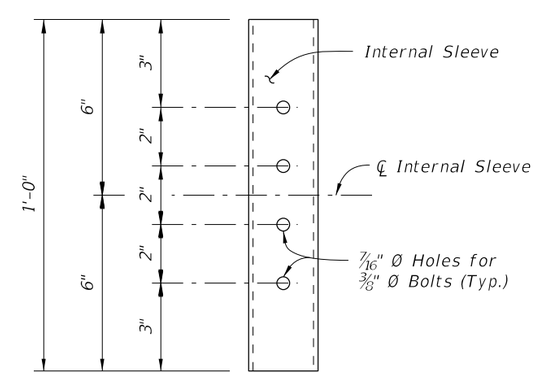

DETAIL "E"
(INTERNAL SLEEVE DETAIL)

CROSS REFERENCE:
For location of Details "B" and "E" see Sheet 1.

10/25/2017 3:45:48 PM

LAST REVISION	REVISION	DESCRIPTION:			INDEX	SHEET
11/01/17			FDOT FY 2018-19 STANDARD PLANS	BRIDGE FENCING (ENCLOSED)	550-012	4 of 4