DIMENSIONS AND QUANTITIES

	D	X	A	B	C	E	F	G	H ■	M Single Pipe	M Double Pipe	M Triple Pipe	M Quad. Pipe	N	5½" CONCRETE SLAB (CY) ◪ Single Pipe	Double Pipe	Triple Pipe	Quad. Pipe	SODDING (SY) Single Pipe	Double Pipe	Triple Pipe	Quad. Pipe
1:2 Slope	15"	2'-7"	1.92'	2.18'	4.10'	2.06'	5'	1.22'	2.9'	4.63'	7.21'	9.79'	12.37'	1.19'	0.38	0.58	0.77	0.96	21	24	27	30
	18"	2'-10"	1.97'	2.74'	4.71'	2.56'	6'	1.41'	3.4'	4.92'	7.75'	10.58'	13.42'	1.21'	0.44	0.65	0.87	1.09	22	25	28	31
	24"	3'-5"	2.06'	3.85'	5.91'	3.56'	7'	1.73'	3.4'	5.50'	8.92'	12.33'	15.75'	1.25'	0.54	0.83	1.12	1.42	24	28	32	35
	30"	4'-3"	2.15'	4.95'	7.10'	4.56'	8'	2.00'	3.4'	6.08'	10.33'	14.58'	18.83'	1.29'	0.66	1.09	1.50	1.91	26	31	35	40
	36"	5'-1"	2.25'	6.08'	8.33'	5.56'	9'	2.24'	3.4'	6.67'	11.75'	16.83'	21.92'	1.33'	0.81	1.38	1.95	2.51	28	34	39	45
	42"	6'-0"	2.34'	7.21'	9.55'	6.56'	10'	2.45'	3.4'	7.25'	13.25'	19.25'	25.25'	1.38'	0.97	1.70	2.45	3.19	30	37	43	50
	48"	6'-9"	2.43'	8.33'	10.76'	7.56'	11'	2.65'	3.4'	7.83'	14.58'	21.33'	28.08'	1.42'	1.13	2.04	2.93	3.84	32	39	47	54
	54"	7'-8"	2.52'	9.44'	11.96'	8.56'	12'	2.83'	3.4'	8.42'	16.08'	23.75'	31.42'	1.46'	1.31	2.44	3.58	4.72	34	42	51	59
	60"	8'-6"	2.62'	10.56'	13.18'	9.56'	14'	3.00'	4.4'	9.00'	17.50'	26.00'	34.50'	1.50'	1.51	2.89	4.28	5.68	36	45	55	64
	66"	9'-2"	2.71'	11.68'	14.39'	10.56'	15'	3.18'	4.4'	9.58'	18.75'	27.92'	37.08'	1.54'	1.68	3.25	4.84	6.43	38	48	58	68
	72"	10'-0"	2.80'	12.80'	15.60'	11.56'	16'	3.30'	4.4'	10.16'	20.16'	30.16'	40.16'	1.58'	1.89	3.74	5.59	7.45	40	51	62	73
1:4 Slope	15"	2'-7"	2.27'	4.09'	6.36'	4.03'	8'	1.22'	4.0'	4.63'	7.21'	9.79'	12.37'	1.19'	0.57	0.87	1.15	1.44	23	26	29	32
	18"	2'-10"	2.36'	5.12'	7.48'	5.03'	9'	1.41'	4.0'	4.92'	7.75'	10.58'	13.42'	1.21'	0.66	0.99	1.31	1.65	25	28	31	35
	24"	3'-5"	2.53'	7.18' △	9.71'	7.03' △	11'	1.73'	4.0'	5.50'	8.92'	12.33'	15.75'	1.25'	0.85	1.30	1.75	2.20	28	32	36	40
	30"	4'-3"	2.70'	9.25'	11.95'	9.03'	13'	2.00'	4.0'	6.08'	10.33'	14.58'	18.83'	1.29'	1.10	1.74	2.39	3.05	31	36	41	46
	36"	5'-1"	2.87'	11.31' ◇	14.18'	11.03' ◇	15'	2.24'	4.0'	6.67'	11.75'	16.83'	21.92'	1.33'	1.32	2.21	3.08	3.96	34	40	46	52
	42"	6'-0"	3.05'	13.37'	16.42'	13.03'	17'	2.45'	4.0'	7.25'	13.25'	19.25'	25.25'	1.38'	1.58	2.76	3.91	5.09	38	44	51	58
	48"	6'-9"	3.22'	15.43'	18.65'	15.03'	19'	2.65'	4.0'	7.83'	14.58'	21.33'	28.08'	1.42'	1.85	3.30	4.73	6.17	41	48	56	63
	54"	7'-8"	3.39'	17.49'	20.88'	17.03'	21'	2.83'	4.0'	8.42'	16.08'	23.75'	31.42'	1.46'	2.14	3.95	5.77	7.58	44	52	61	69
	60"	8'-6"	3.56'	19.55'	23.11'	19.03'	23'	3.00'	4.0'	9.00'	17.50'	26.00'	34.50'	1.50'	2.45	4.66	6.87	9.07	47	56	66	75
	66"	9'-2"	3.73'	21.62'	25.35'	21.03'	25'	3.18'	4.0'	9.58'	18.75'	27.92'	37.08'	1.54'	2.88	5.54	8.18	10.84	49	59	69	80
	72"	10'-0"	3.91'	23.68'	27.59'	23.03'	27'	3.30'	4.0'	10.16'	20.16'	30.16'	40.16'	1.58'	3.54	6.61	9.87	13.13	52	63	74	85

◪ See General Note No. 5.
See Sheet 5 For 3" Slab Quantities

■ Values shown for estimating pipe quantities and are for information only.

B	E	
△ 6.42'	△ 6.25'	Dimensions permitted to allow use of 8' standard pipe lengths.
◇ 10.40'	◇ 10.10'	Dimensions permitted to allow use of 12' standard pipe lengths.

△ ◇ Concrete slab shall be deepened to form bridge across crown of pipe. See section below.

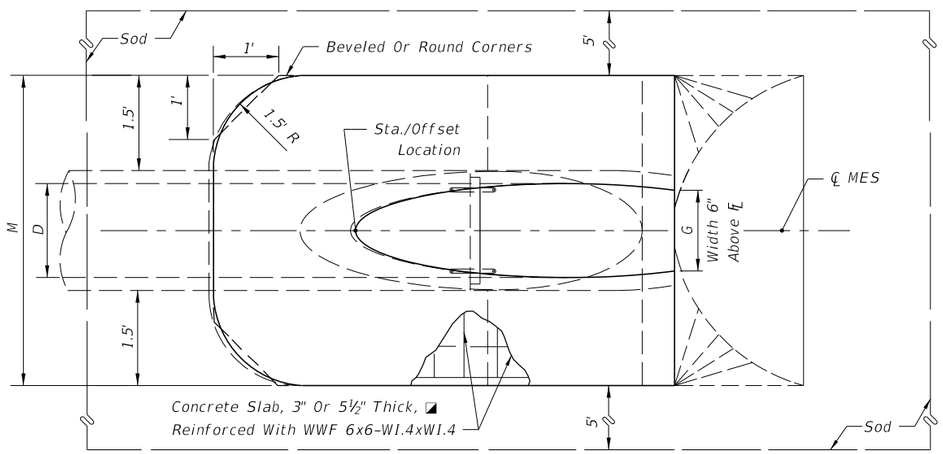

TOP-VIEW SINGLE PIPE

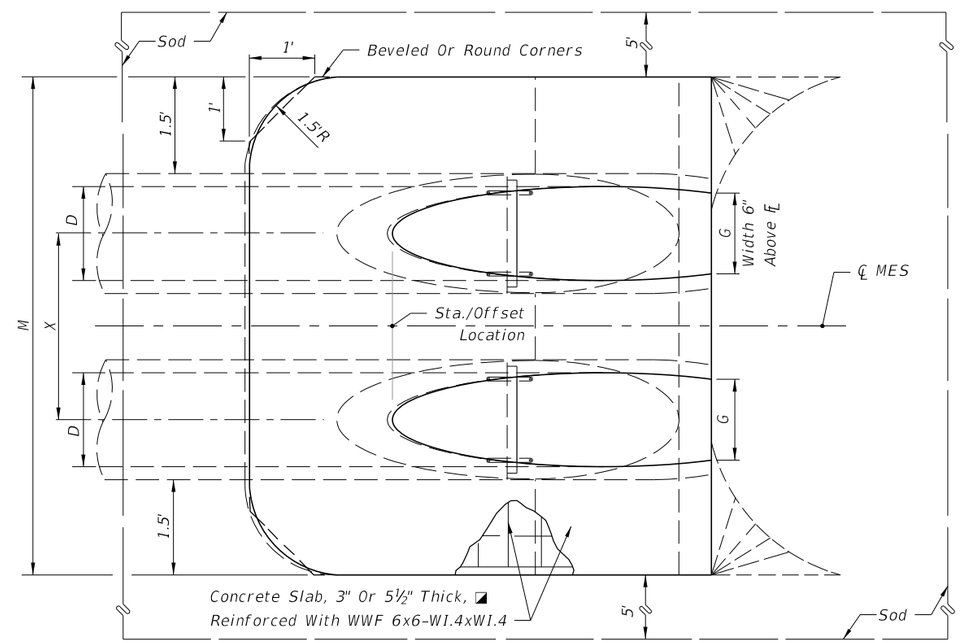

TOP-VIEW MULTIPLE PIPE

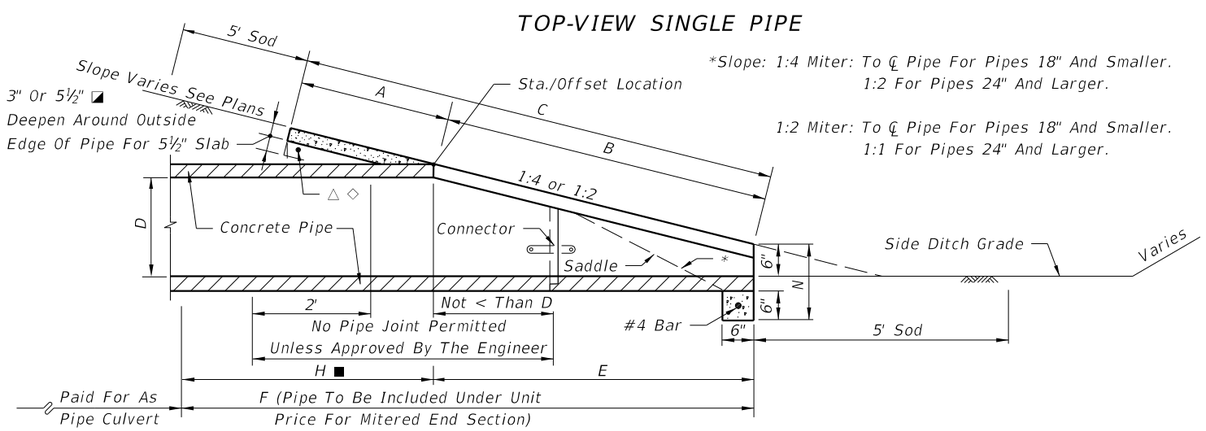

*Slope: 1:4 Miter: To ℄ Pipe For Pipes 18" And Smaller.
1:2 For Pipes 24" And Larger.

1:2 Miter: To ℄ Pipe For Pipes 18" And Smaller.
1:1 For Pipes 24" And Larger.

SECTION

NOTE: See sheet 6 for details and notes.

SINGLE AND MULTIPLE ROUND CONCRETE PIPE

9:01:50 AM
7/31/2018

LAST REVISION	REVISION	DESCRIPTION:			INDEX	SHEET
11/01/17			FY 2018-19 STANDARD PLANS	CROSS DRAIN MITERED END SECTION	430-021	1 of 6

DIMENSIONS AND QUANTITIES

	D	X	A	B	C	E	F	G	H ■	M Single Pipe	M Double Pipe	M Triple Pipe	M Quad. Pipe	N	5½" CONCRETE SLAB (CY) ◪ Single Pipe	5½" CONCRETE SLAB (CY) ◪ Double Pipe	5½" CONCRETE SLAB (CY) ◪ Triple Pipe	5½" CONCRETE SLAB (CY) ◪ Quad. Pipe	SODDING (SY) Single Pipe	SODDING (SY) Double Pipe	SODDING (SY) Triple Pipe	SODDING (SY) Quad. Pipe
1:2 Slope	15"	2'-7"	2.5'	1.68'	4.18'	1.5'	5.0'	1.23'	3.5'	4.33'	6.92'	9.50'	12.08'	1.04'	0.35	0.54	0.74	0.94	21	24	27	29
	18"	2'-10"	2.5'	2.24'	4.74'	2.0'	6.0'	1.41'	4'	4.58'	7.42'	10.25'	13.08'	1.04'	0.38	0.62	0.87	1.12	22	25	28	31
	24"	3'-5"	2.5'	3.35'	5.85'	3.0'	7.0'	1.73'	4'	5.08'	8.50'	11.92'	15.33'	1.04'	0.47	0.76	1.05	1.34	23	27	31	35
	30"	4'-3"	2.5'	4.47'	6.97'	4.0'	8.0'	2.00'	4'	5.58'	9.83'	14.08'	18.33'	1.04'	0.57	0.96	1.37	1.77	25	30	35	39
	36"	5'-1"	2.5'	5.59'	8.09'	5.0'	9.0'	2.24'	4'	6.08'	11.17'	16.25'	21.33'	1.04'	0.67	1.19	1.72	2.26	27	33	38	44
	42"	6'-0"	2.5'	6.71'	9.21'	6.0'	10.0'	2.45'	4'	6.58'	12.58'	18.58'	24.58'	1.04'	0.78	1.48	2.17	2.87	29	36	42	49
	48"	6'-9"	2.5'	7.83'	10.33'	7.0'	11.0'	2.65'	4'	7.08'	13.83'	20.58'	27.33'	1.04'	0.89	1.71	2.54	3.36	31	38	46	53
	54"	7'-8"	2.5'	8.94'	11.44'	8.0'	12.0'	2.83'	4'	7.58'	15.25'	22.92'	30.58'	1.04'	1.02	2.06	3.10	4.14	33	41	50	58
	60"	8'-6"	2.5'	10.06'	12.56'	9.0'	13.0'	3.00'	4'	8.08'	16.58'	25.08'	33.58'	1.04'	1.14	2.38	3.63	4.89	34	44	53	63
1:4 Slope	15"	2'-7"	2.5'	3.09'	5.59'	3.0'	7.0'	1.23'	4'	4.33'	6.92'	9.50'	12.08'	1.04'	0.44	0.68	0.91	1.15	22	25	28	31
	18"	2'-10"	2.5'	4.12'	6.62'	4.0'	8.0'	1.41'	4'	4.58'	7.42'	10.25'	13.08'	1.04'	0.49	0.77	1.03	1.31	24	27	30	33
	24"	3'-5"	2.5'	6.18'	8.68'	6.0'	10.0'	1.73'	4'	5.08'	8.50'	11.92'	15.33'	1.04'	0.65	1.09	1.38	1.77	27	30	34	38
	30"	4'-3"	2.5'	8.25'	10.75'	8.0'	12.0'	2.00'	4'	5.58'	9.83'	14.08'	18.33'	1.04'	0.81	1.34	1.90	2.44	29	34	39	44
	36"	5'-1"	2.5'	10.31'	12.81'	10.0'	14.0'	2.24'	4'	6.08'	11.17'	16.25'	21.33'	1.04'	0.97	1.68	2.41	3.14	32	38	44	49
	42"	6'-0"	2.5'	12.37'	14.87'	12.0'	16.0'	2.45'	4'	6.58'	12.58'	18.58'	24.58'	1.04'	1.13	2.08	3.06	4.02	35	42	48	55
	48"	6'-9"	2.5'	14.43'	16.93'	14.0'	18.0'	2.65'	4'	7.08'	13.83'	20.58'	27.33'	1.04'	1.29	2.49	3.69	4.88	38	46	53	60
	54"	7'-8"	2.5'	16.49'	18.99'	16.0'	20.0'	2.83'	4'	7.58'	15.25'	22.92'	30.58'	1.04'	1.48	2.98	4.47	5.98	41	49	58	66
	60"	8'-6"	2.5'	18.55'	21.05'	18.0'	22.0'	3.00'	4'	8.08'	16.58'	25.08'	33.58'	1.04'	1.66	3.49	5.31	7.13	44	53	63	72

◪ See General Note No. 5. See Sheet 5 For 3" Slab Quantities

■ Values shown for estimating pipe quantities and are for information only

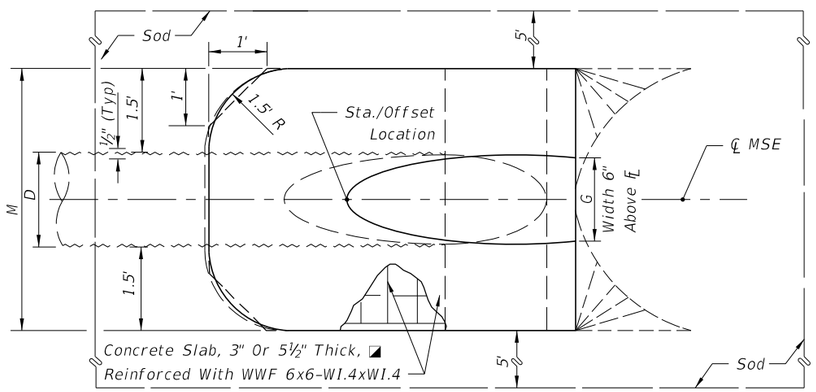

TOP VIEW-SINGLE PIPE

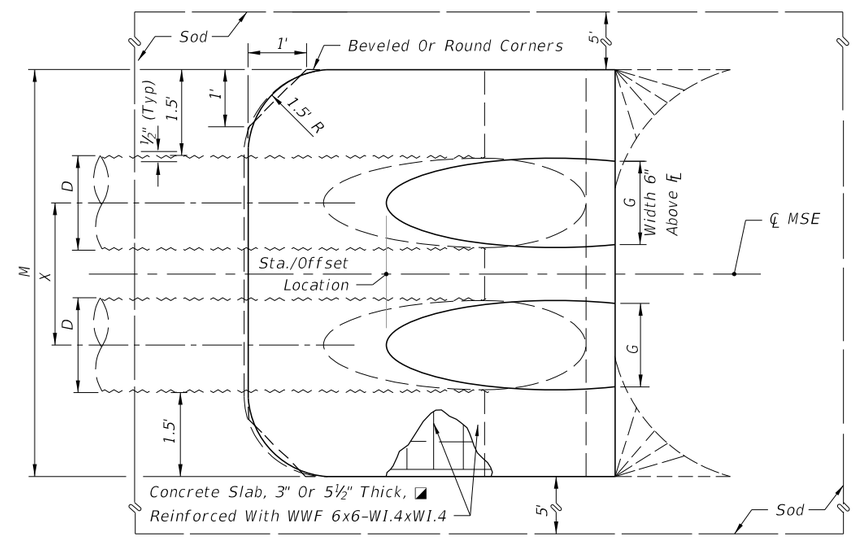

TOP VIEW-MULTIPLE PIPE

*Slope: 1:4 Miter: To ℄ Pipe For Pipes 18" And Smaller.
1:2 For Pipes 24" And Larger.

1:2 Miter: To ℄ Pipe For Pipes 18" And Smaller.
1:1 For Pipes 24" And Larger.

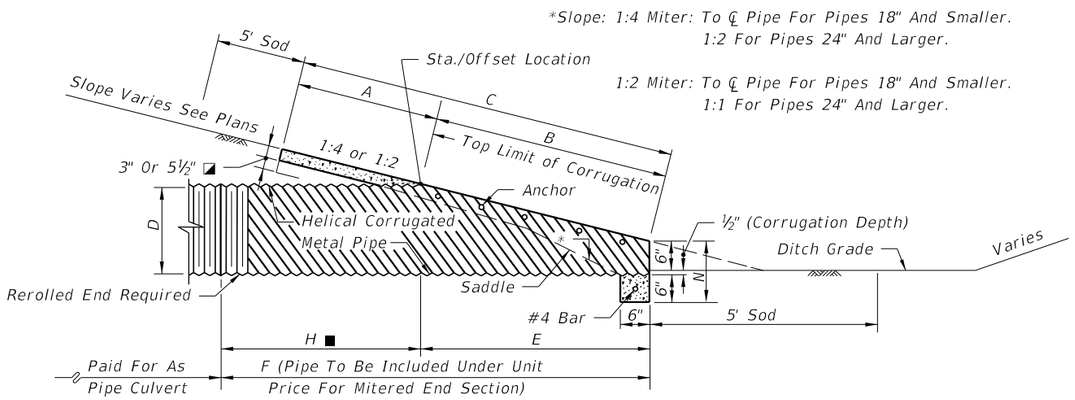

SECTION

NOTE: See Sheet 6 For Details And Notes.

SINGLE AND MULTIPLE ROUND CORRUGATED METAL PIPE

9:01:53 AM
7/31/2018

LAST REVISION	REVISION	DESCRIPTION:	FY 2018-19 STANDARD PLANS	CROSS DRAIN MITERED END SECTION	INDEX	SHEET
11/01/17					430-021	2 of 6

1974 AASHTO			DIMENSIONS AND QUANTITIES																			
											M					5½" CONCRETE SLAB (CY) ◪				SODDING (SY)			
	SPAN	RISE	X	A	B	C	E	F	G	H ■	Single Pipe	Double Pipe	Triple Pipe	Quad. Pipe	N	Single Pipe	Double Pipe	Triple Pipe	Quad. Pipe	Single Pipe	Double Pipe	Triple Pipe	Quad. Pipe
1:2 Slope	17"	13"	2'-6"	2.5'	1.30'	3.80'	1.17'	4'	1.39'	2.8'	4.50'	7.00'	9.50'	12.00'	1.04'	0.41	0.61	0.81	1.02	21	23	26	29
	21"	15"	2'-10"	2.5'	1.68'	4.17'	1.50'	5'	1.76'	3.5'	4.83'	7.67'	10.50'	13.33'	1.04'	0.43	0.66	0.88	1.10	22	25	28	31
	28"	20"	3'-5"	2.5'	2.61'	5.11'	2.33'	6'	2.22'	3.7'	5.42'	8.83'	12.25'	15.67'	1.04'	0.51	0.78	1.06	1.33	23	27	30	34
	35"	24"	4'-0"	2.5'	3.35'	5.85'	3.00'	7'	2.55'	4.0'	6.00'	10.00'	14.00'	18.00'	1.04'	0.57	0.90	1.22	1.55	24	29	33	38
	42"	29"	4'-9"	2.5'	4.29'	6.79'	3.83'	8'	2.97'	4.2'	6.58'	11.33'	16.08'	20.83'	1.04'	0.64	1.04	1.46	1.87	26	31	37	42
	49"	33"	5'-6"	2.5'	5.03'	7.53'	4.50'	9'	3.34'	4.5'	7.17'	12.67'	18.17'	23.67'	1.04'	0.73	1.23	1.72	2.22	28	34	40	46
	57"	38"	6'-4"	2.5'	5.96'	8.46'	5.33'	10'	3.65'	4.7'	7.83'	14.17'	20.50'	26.83'	1.04'	0.83	1.44	2.04	2.64	29	36	44	51
	64"	43"	7'-1"	2.5'	6.89'	9.39'	6.17'	11'	3.89'	4.8'	8.42'	15.50'	22.58'	29.67'	1.04'	0.95	1.67	2.39	3.11	31	39	47	55
	71"	47"	7'-10"	2.5'	7.64'	10.14'	6.83'	12'	4.14'	5.2'	9.00'	16.83'	24.67'	32.50'	1.04'	1.05	1.89	2.74	3.57	33	41	50	59
1:4 Slope	17"	13"	2'-6"	2.5'	2.41'	4.91'	2.33'	7'	1.39'	4.7'	4.50'	7.00'	9.50'	12.00'	1.04'	0.48	0.71	0.95	1.18	22	25	27	30
	21"	15"	2'-10"	2.5'	3.09'	5.59'	3.00'	8'	1.76	5.0'	4.83'	7.67'	10.50'	13.33'	1.04'	0.52	0.80	1.09	1.31	23	26	29	32
	28"	20"	3'-5"	2.5'	4.81'	7.31'	4.67'	9'	2.22'	4.3'	5.42'	8.83'	12.25'	15.67'	1.04'	0.61	0.92	1.27	1.59	25	29	33	37
	35"	24"	4'-0"	2.5'	6.18'	8.68'	6.00'	11'	2.55'	5.0'	6.00'	10.00'	14.00'	18.00'	1.04'	0.73	1.14	1.55	1.97	28	32	37	41
	42"	29"	4'-9"	2.5'	7.90'	10.40'	7.67'	12'	2.97'	4.3'	6.58'	11.33'	16.08'	20.83'	1.04'	0.87	1.39	1.92	2.45	30	35	41	46
	49"	33"	5'-6"	2.5'	9.28'	11.78'	9.00'	14'	3.34'	5.0'	7.17'	12.67'	18.17'	23.67'	1.04'	1.00	1.66	2.30	2.96	32	38	45	51
	57"	38"	6'-4"	2.5'	11.00'	13.50'	10.67'	16'	3.65'	5.3'	7.83'	14.17'	20.50'	26.83'	1.04'	1.18	2.00	2.82	3.64	35	42	49	56
	64"	43"	7'-1"	2.5'	12.71'	15.21'	12.33'	17'	3.89'	4.7'	8.42'	15.50'	22.58'	29.67'	1.04'	1.36	2.39	3.38	4.38	38	45	53	61
	71"	47"	7'-10"	2.5'	14.09'	16.59'	13.67'	19'	4.14'	5.3'	9.00'	16.83'	24.67'	32.50'	1.04'	1.50	2.65	3.81	4.97	40	48	57	66

◪ See General Note No. 5.
See Sheet 5 For 3" Slab Quantities

■ Values shown for estimating pipe quantities and are for information.

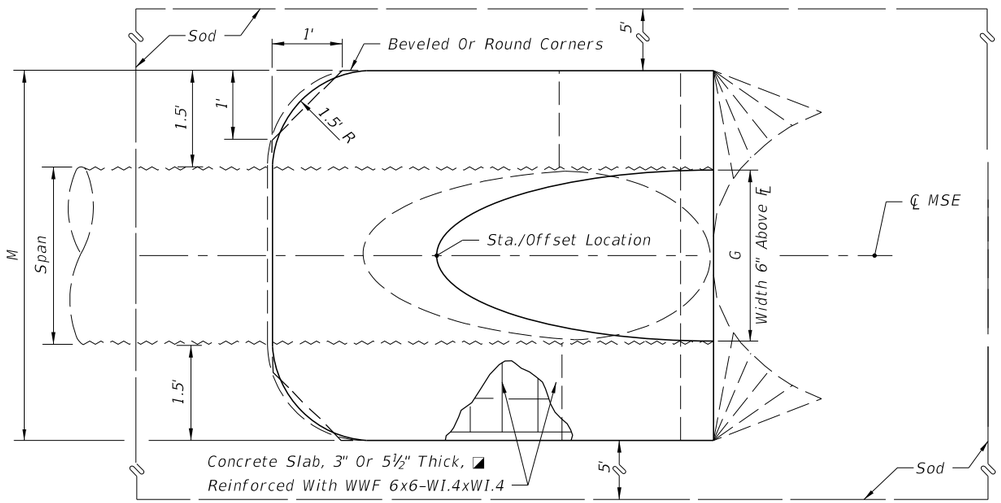

TOP VIEW-SINGLE PIPE

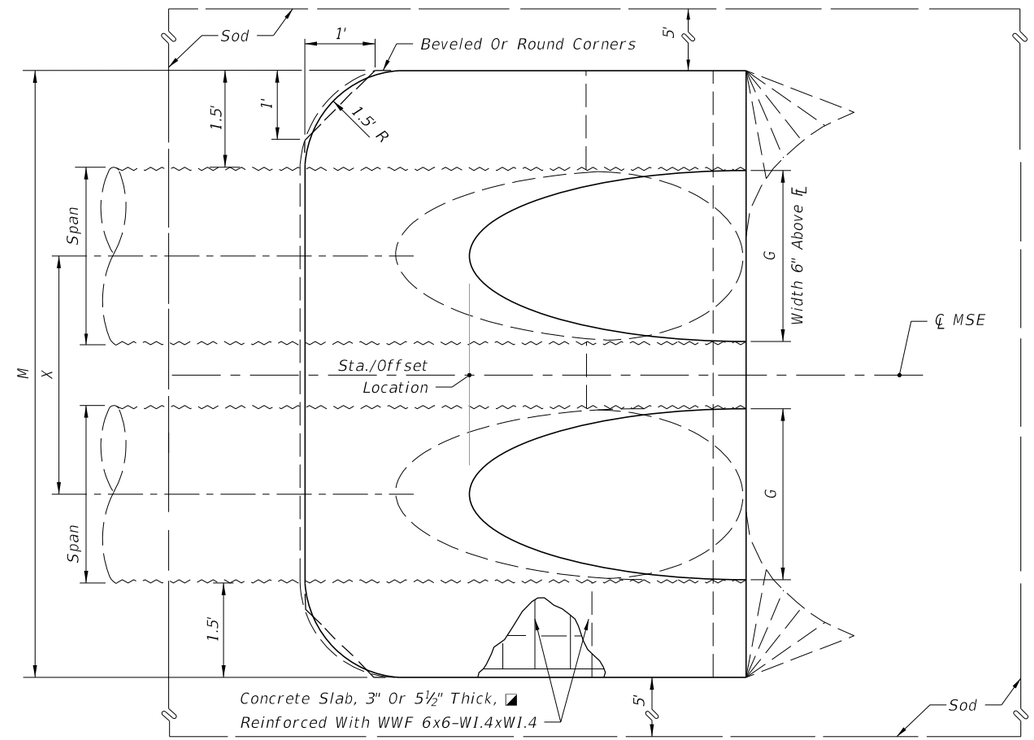

TOP VIEW-MULTIPLE PIPE

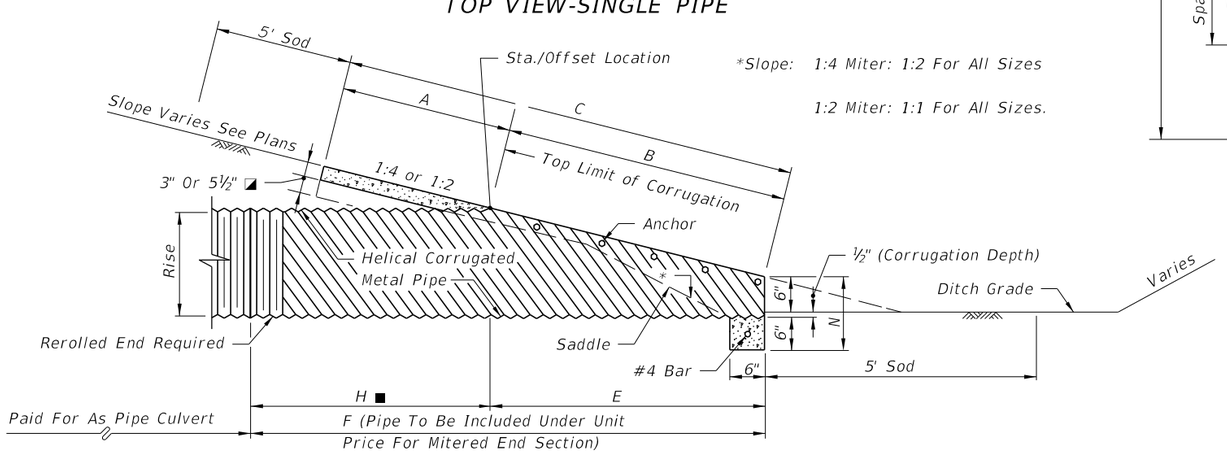

*Slope: 1:4 Miter: 1:2 For All Sizes

1:2 Miter: 1:1 For All Sizes.

SECTION

NOTE: See Sheet 6 For Details And Notes.

SINGLE AND MULTIPLE CORRUGATED METAL PIPE-ARCH

9:01:58 AM

7/31/2018

LAST REVISION	REVISION	DESCRIPTION:					
11/01/17			FDOT	FY 2018-19 STANDARD PLANS	CROSS DRAIN MITERED END SECTION	INDEX 430-021	SHEET 3 of 6

DIMENSIONS & QUANTITIES

	Rise R	Span S	X	A	B	C	E	F	G	H ■	M Single Pipe	M Double Pipe	M Triple Pipe	M Quad. Pipe	N	5½" CONC. SLAB (CY) ◪ Single Pipe	5½" CONC. SLAB (CY) ◪ Double Pipe	5½" CONC. SLAB (CY) ◪ Triple Pipe	5½" CONC. SLAB (CY) ◪ Quad. Pipe	SODDING (SY) Single Pipe	SODDING (SY) Double Pipe	SODDING (SY) Triple Pipe	SODDING (SY) Quad. Pipe
1:2 Slope	12"	18"	2'-10"	1.97'	1.62'	3.59'	1.56'	4'	1.50'	2.4'	4.92'	7.75'	10.58'	13.42'	1.21'	0.30	0.49	0.67	0.85	21	24	27	30
	14"	23"	3'-4"	2.01'	1.99'	4.00'	1.89'	5'	1.90'	3.1'	5.38'	8.71'	12.04'	15.38'	1.23'	0.37	0.59	0.81	1.02	22	26	29	33
	19"	30"	4'-0"	2.11'	2.92'	5.03'	2.73'	6'	2.37'	3.3'	6.04'	10.04'	14.04'	18.04'	1.27'	0.50	0.80	1.09	1.39	24	28	33	37
	24"	38"	5'-0"	2.20'	3.85'	6.05'	3.56'	7'	2.85'	3.4'	6.79'	11.79'	16.79'	21.79'	1.31'	0.62	1.03	1.45	1.86	26	31	37	42
	29"	45"	5'-11"	2.34'	4.79'	7.13'	4.39'	8'	3.19'	3.6'	7.50'	13.42'	19.33'	25.25'	1.38'	0.75	1.30	1.84	2.39	28	34	41	47
	34"	53"	7'-0"	2.43'	5.72'	8.15'	5.23'	9'	3.57'	3.8'	8.25'	15.25'	22.25'	29.25'	1.42'	0.90	1.61	2.32	3.03	30	37	45	53
	38"	60"	7'-10"	2.52'	6.46'	8.98'	5.89'	9'	3.95'	3.1'	8.92'	16.75'	24.58'	32.42'	1.46'	1.03	1.89	2.74	3.60	31	40	49	57
	43"	68"	8'-11"	2.62'	7.39'	10.01'	6.73'	10'	4.28'	3.3'	9.67'	18.58'	27.50'	36.42'	1.50'	1.19	2.26	3.33	4.40	33	43	53	63
	48"	76"	9'-11"	2.71'	8.33'	11.04'	7.56'	11'	4.59'	3.4'	10.42'	20.33'	30.25'	40.17'	1.54'	1.38	2.65	3.93	5.21	35	46	57	68
	53"	83"	10'-8"	2.80'	9.26'	12.06'	8.39'	12'	4.77'	3.6'	11.08'	21.75'	32.42'	43.08'	1.58'	1.55	3.03	4.50	5.96	37	49	61	73
	58"	91"	11'-8"	2.90'	10.19'	13.09'	9.23'	13'	5.01'	3.8'	11.83'	23.50'	35.17'	46.83'	1.63'	1.75	3.47	5.20	6.93	39	52	65	78
1:4 Slope	12"	18"	2'-10"	2.36'	3.06'	5.42'	3.03'	5'	1.50'	2.0'	4.92'	7.75'	10.58'	13.42'	1.21'	0.45	0.68	0.92	1.14	23	26	29	32
	14"	23"	3'-4"	2.44'	3.75'	6.19'	3.70'	6'	1.90'	2.3'	5.38'	8.71'	12.04'	15.38'	1.23'	0.53	0.83	1.13	1.42	24	28	32	35
	19"	30"	4'-0"	2.62'	5.47'	8.09'	5.36'	8'	2.37'	2.6'	6.04'	10.04'	14.04'	18.04'	1.27'	0.74	1.15	1.57	1.98	27	32	36	40
	24"	38"	5'-0"	2.79'	7.18'	9.97'	7.03'	10'	2.85'	3.0'	6.79'	11.79'	16.79'	21.79'	1.31'	0.97	1.57	2.19	2.81	30	36	41	47
	29"	45"	5'-11"	3.05'	8.90'	11.95'	8.70'	12'	3.19'	3.3'	7.50'	13.42'	19.33'	25.25'	1.38'	1.22	2.07	2.92	3.77	33	40	46	53
	34"	53"	7'-0"	3.22'	10.62'	13.84'	10.36'	13'	3.57'	2.6'	8.25'	15.25'	22.25'	29.25'	1.42'	1.48	2.62	3.77	4.92	36	44	52	59
	38"	60"	7'-10"	3.39'	11.99'	15.38'	11.70'	15'	3.95'	3.3'	8.92'	16.75'	24.58'	32.42'	1.46'	1.72	3.12	4.53	5.92	38	47	56	65
	43"	68"	8'-11"	3.56'	13.71'	17.27'	13.36'	17'	4.28'	3.6'	9.67'	18.58'	27.50'	36.42'	1.50'	2.02	3.78	5.56	7.32	41	51	61	71
	48"	76"	9'-11"	3.73'	15.43'	19.16'	15.03'	19'	4.59'	4.0'	10.42'	20.33'	30.25'	40.17'	1.54'	2.34	4.49	6.64	8.79	44	55	66	77
	53"	83"	10'-8"	3.91'	17.15'	21.06'	16.70'	20'	4.77'	3.3'	11.08'	21.75'	32.42'	43.08'	1.58'	2.66	5.17	7.66	10.16	47	59	71	83
	58"	91"	11'-8"	4.08'	18.87'	22.95'	18.36'	22'	5.01'	3.6'	11.83'	23.50'	35.17'	46.83'	1.63'	3.02	5.98	8.95	11.90	50	63	76	89

◪ See General Note No. 3.
See Sheet 5 For 3" Slab Quantities

■ Values shown for estimating pipe quantities and are for information only.

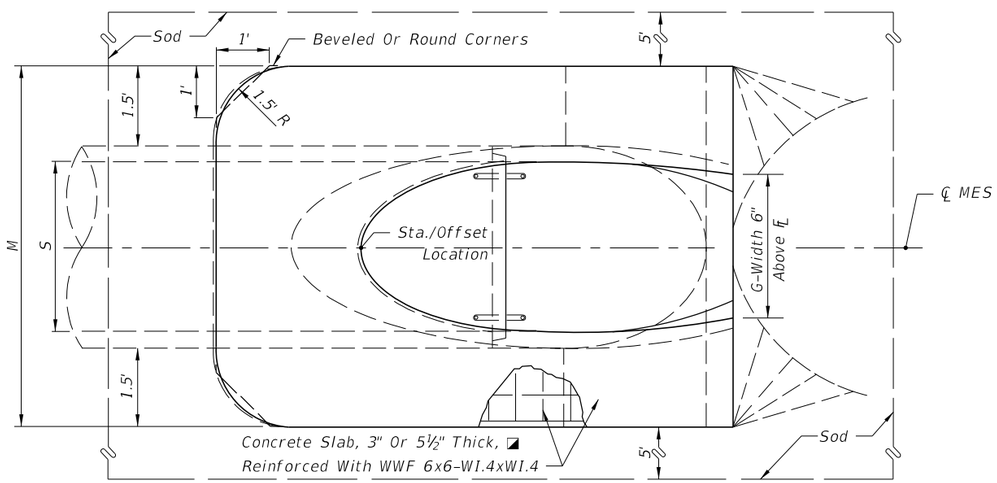

TOP VIEW-SINGLE PIPE

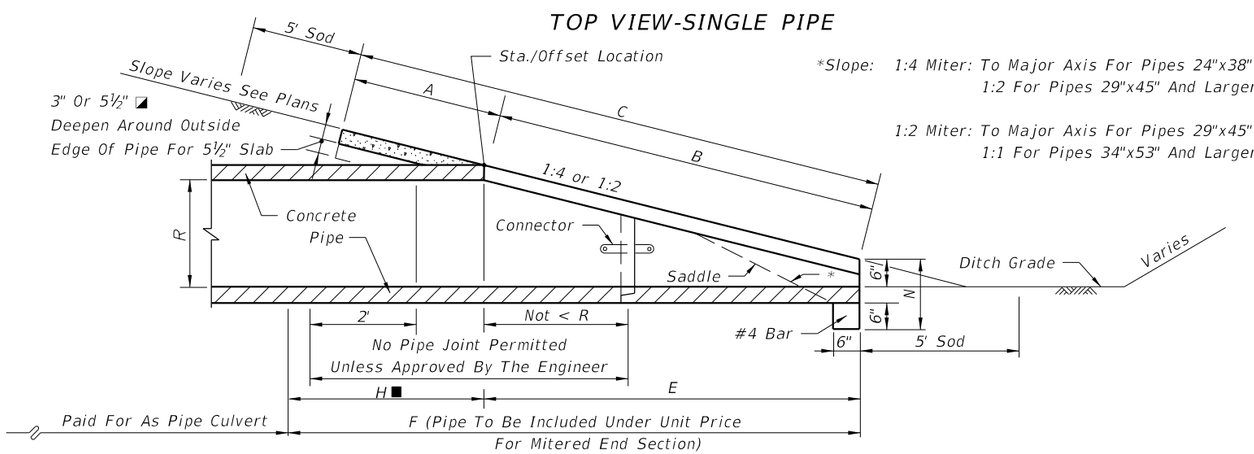

*Slope: 1:4 Miter: To Major Axis For Pipes 24"x38" And Smaller.
1:2 For Pipes 29"x45" And Larger.

1:2 Miter: To Major Axis For Pipes 29"x45" And Smaller.
1:1 For Pipes 34"x53" And Larger.

SECTION

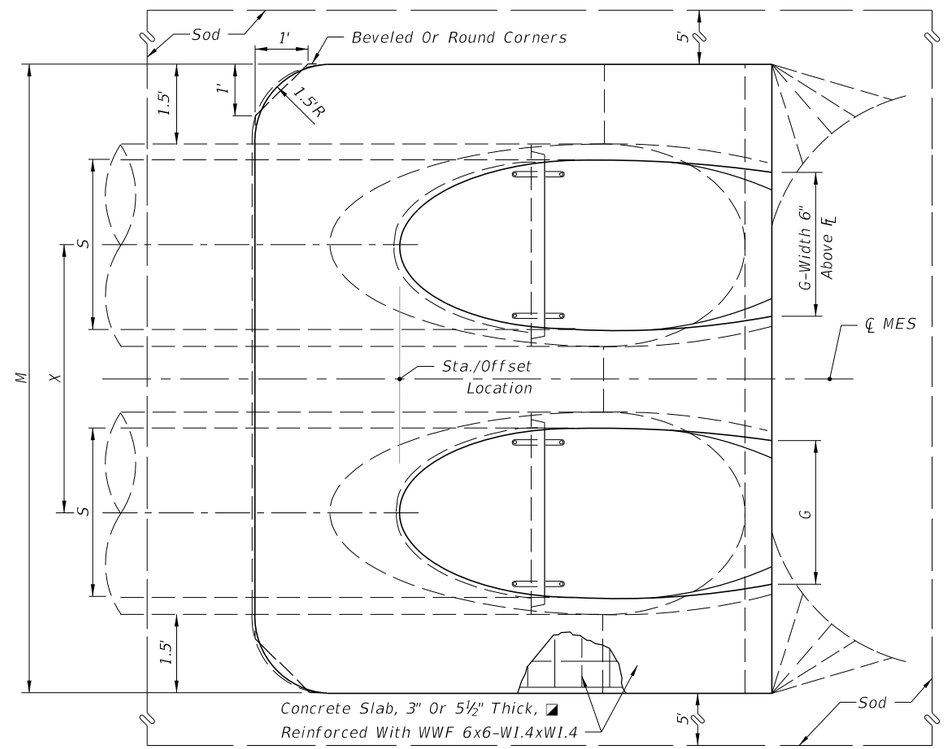

NOTE: See Sheet 6 For Details And Notes.

TOP VIEW - MULTIPLE PIPE

SINGLE AND MULTIPLE ELLIPTICAL CONCRETE PIPE

LAST REVISION	REVISION	DESCRIPTION:			INDEX	SHEET
11/01/17			FY 2019-20 STANDARD PLANS	CROSS DRAIN MITERED END SECTION	430-021	4 of 6

7/31/2018 9:02:12 AM

QUANTITIES FOR 3" THICK CONCRETE SLABS (CY)

	D	ROUND-CONCRETE			
		Single Pipe	Double Pipe	Triple Pipe	Quad. Pipe
1:2 Slope	15"	0.27	0.41	0.54	0.67
	18"	0.31	0.45	0.60	0.75
	24"	0.39	0.59	0.79	1.00
	30"	0.46	0.76	1.04	1.32
	36"	0.55	0.94	1.33	1.71
	42"	0.66	1.15	1.66	2.15
	48"	0.76	1.37	1.96	2.57
	54"	0.87	1.62	2.38	3.14
	60"	0.99	1.90	2.81	3.73
	66"	1.11	2.15	3.21	4.27
	72"	1.24	2.46	3.68	4.90
1:4 Slope	15"	0.40	0.61	0.80	1.00
	18"	0.47	0.69	0.91	1.14
	24"	0.60	0.90	1.21	1.52
	30"	0.76	1.19	1.63	2.07
	36"	0.89	1.48	2.05	2.63
	42"	1.05	1.82	2.57	3.34
	48"	1.21	2.15	3.07	4.00
	54"	1.39	2.55	3.72	4.88
	60"	1.59	3.02	4.44	5.86
	66"	1.91	3.66	5.40	7.15
	72"	2.12	4.18	6.24	8.30

	D	ROUND-CMP			
		Single Pipe	Double Pipe	Triple Pipe	Quad. Pipe
1:2 Slope	15"	0.24	0.37	0.51	0.64
	18"	0.26	0.43	0.61	0.78
	24"	0.32	0.52	0.72	0.91
	30"	0.38	0.64	0.91	1.18
	36"	0.44	0.78	1.13	1.48
	42"	0.51	0.96	1.41	1.87
	48"	0.57	1.09	1.63	2.15
	54"	0.65	1.32	1.99	2.66
	60"	0.71	1.49	2.28	3.07
1:4 Slope	15"	0.31	0.47	0.63	0.79
	18"	0.34	0.53	0.71	0.90
	24"	0.44	0.69	0.92	1.18
	30"	0.53	0.88	1.25	1.60
	36"	0.62	1.07	1.53	2.00
	42"	0.71	1.30	1.92	2.52
	48"	0.80	1.54	2.29	3.02
	54"	0.91	1.83	2.74	3.67
	60"	1.02	2.15	3.27	4.39

	Span	Rise	CMP-ARCH			
			Single Pipe	Double Pipe	Triple Pipe	Quad. Pipe
1:2 Slope	17"	13"	0.33	0.49	0.65	0.81
	21"	15"	0.33	0.50	0.67	0.83
	28"	20"	0.37	0.56	0.76	0.95
	35"	24"	0.40	0.62	0.84	1.07
	42"	29"	0.43	0.70	0.98	1.25
	49"	33"	0.49	0.82	1.15	1.48
	57"	38"	0.55	0.95	1.35	1.75
	64"	43"	0.62	1.10	1.57	2.05
	71"	47"	0.69	1.24	1.80	2.35
1:4 Slope	17"	13"	0.38	0.56	0.74	0.92
	21"	15"	0.39	0.59	0.80	0.95
	28"	20"	0.43	0.64	0.88	1.10
	35"	24"	0.49	0.77	1.05	1.33
	42"	29"	0.57	0.92	1.27	1.62
	49"	33"	0.65	1.08	1.50	1.93
	57"	38"	0.76	1.30	1.83	2.37
	64"	43"	0.87	1.55	2.18	2.83
	71"	47"	0.95	1.68	2.43	3.17

	Rise	Span	ELLIPTICAL-CONCRETE			
			Single Pipe	Double Pipe	Triple Pipe	Quad. Pipe
1:2 Slope	12"	18"	0.19	0.33	0.45	0.57
	14"	23"	0.25	0.40	0.55	0.69
	19"	30"	0.34	0.55	0.75	0.95
	24"	38"	0.43	0.71	1.00	1.28
	29"	45"	0.52	0.90	1.27	1.65
	34"	53"	0.62	1.11	1.60	2.09
	38"	60"	0.70	1.29	1.87	2.46
	43"	68"	0.81	1.54	2.26	2.99
	48"	76"	0.93	1.79	2.66	3.53
	53"	83"	1.04	2.04	3.03	4.02
	58"	91"	1.17	2.33	3.49	4.66
1:4 Slope	12"	18"	0.30	0.45	0.61	0.76
	14"	23"	0.36	0.56	0.76	0.95
	19"	30"	0.51	0.79	1.08	1.36
	24"	38"	0.68	1.10	1.53	1.96
	29"	45"	0.86	1.45	2.04	2.63
	34"	53"	1.02	1.81	2.60	3.39
	38"	60"	1.18	2.14	3.10	4.05
	43"	68"	1.38	2.58	3.79	4.99
	48"	76"	1.59	3.05	4.51	5.97
	53"	83"	1.80	3.50	5.19	6.88
	58"	91"	2.04	4.04	6.05	8.05

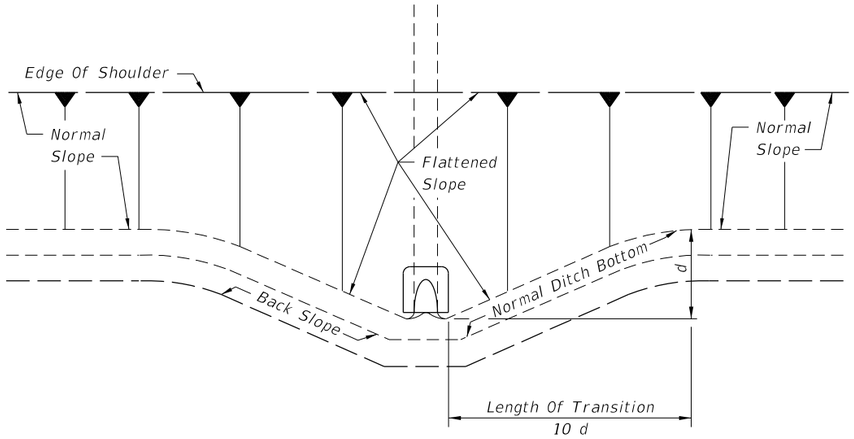

PLAN

NOTE: See General Note 4

SLOPE AND DITCH TRANSITIONS

GENERAL NOTES

1. Unless otherwise designated in the plans, concrete pipe mitered end sections may be used with any type of cross drain pipe; corrugated steel pipe mitered end sections may be used with any type of cross drain pipe except aluminum pipe; and, corrugated aluminum mitered end sections may be used with any type of cross drain pipe except steel pipe. When bituminous coated metal pipe is specified for cross drain pipe, construct the mitered end sections with like pipe or concrete pipe. When the mitered end section pipe is dissimilar to the cross drain pipe, construct a concrete jacket in accordance with Index 430-001.

2. Use either corrugated metal or concrete mitered end sections for corrugated polyethylene pipe (HDPE), polyvinyl-chloride pipe (PVC) and polypropylene pipe (PPP). When used in conjunction with corrugated mitered end sections, make connection using either a formed metal band specifically designated to join HDPE or PVC pipe, with metal pipe or other coupler approved by the State Drainage Engineer. When used in conjunction with a concrete mitered end sections, concrete jacket constructed in accordance with Index 430-001.

3. Class NS concrete cast-in-place reinforced slabs are required for all sizes of cross drain pipes. Unless 3" thickness called for in plans, construct slabs at 5½" thick.

4. Select lengths of concrete pipe that avoid excessive connections in the assembly of the mitered end section.

5. Repair corrugated metal pipe galvanizing that is damaged during beveling and perforating.

6. Prior to placing concrete slab apply a bituminous coating to any portion of corrugated metal pipe in direct contact with concrete. Extend the coating 12" beyond the concrete slab.

7. When existing multiple cross drain pipes are spaced other than the dimensions shown in this Index, have nonparallel axes, or non-uniform sections, either construct the mitered end sections separately as single pipe or collectively as multiple pipe end sections as directed by the Engineer.

DESIGN NOTES

1. Mitered end sections for pipe sizes 15", 18" and 24" round or equivalent pipe arch or elliptical pipe are permitted within the clear zone. When the slope intersection permits, the mitered end section may be located with the culvert opening as close as 8' beyond the outside edge of the shoulder.

2. Include slope and ditch transitions when the normal roadway slope must be flattened to place end section outside clear zone. See Slope and Ditch Transitions detail.

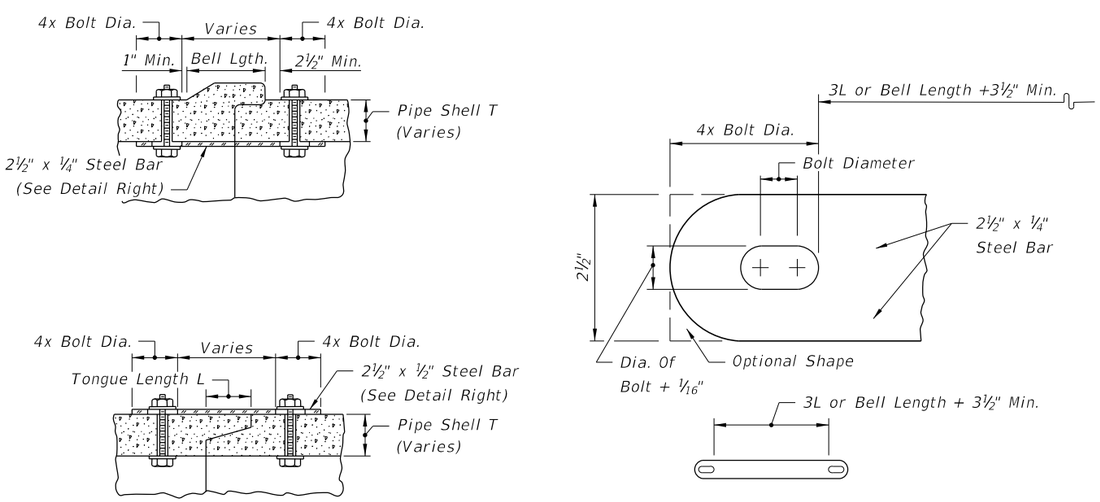

All bars, bolts, nuts and washers are to be galvanized steel.
Bolt diameters shall be ⅜" for 15" to 36" pipe and ⅝" for 42" to 72" pipe.
Two connectors required per joint, located 60° right and left of bottom center of pipe.
Bolt holes in pipe shell are to be drilled.

CONCRETE PIPE CONNECTOR

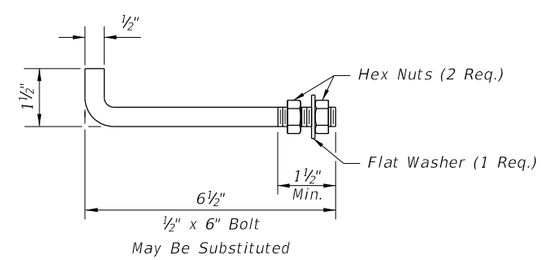

Anchors required for CMP only.

Anchor, washer and nuts to be galvanized steel.

Bend anchor where required to center in concrete slab. Damaged surfaces to be repaired after bending. Anchors are to be spaced a distance equal to four (4) corrugations. Place the anchors in the outside crest of corrugation.

Flat washers to be placed on inside wall of pipe.

Holes in the mitered end pipe are to be drilled or punched; burning not permitted.

ANCHOR DETAIL

SPECIAL DETAILS AND NOTES