5th ANNUAL FDOT STRUCTURES RESEARCH UPDATE

Evaluation of Positive Grip Span Locks

PROJECT No. C9290

Presented to FDOT 5th Annual Structures Research Update, August 4th 2015

By Michael Sileno, P.E.
Hardesty & Hanover

Acknowledgements:
Alberto Sardinas
FDOT D4 Structures Maintenance

Angel Rodriguez, P.E.
FDOT Structures Design Office

Michael & Steve Hanley
Electro Hydraulic Machinery Co.

Agenda

- Span Locks for Double Leaf Bascule Spans
- Study Objective
- Approach to Study
- Selected Concept
- Future Study and Testing

Hardesty & Hanover

Span Locks for Double Leaf Bascule Spans

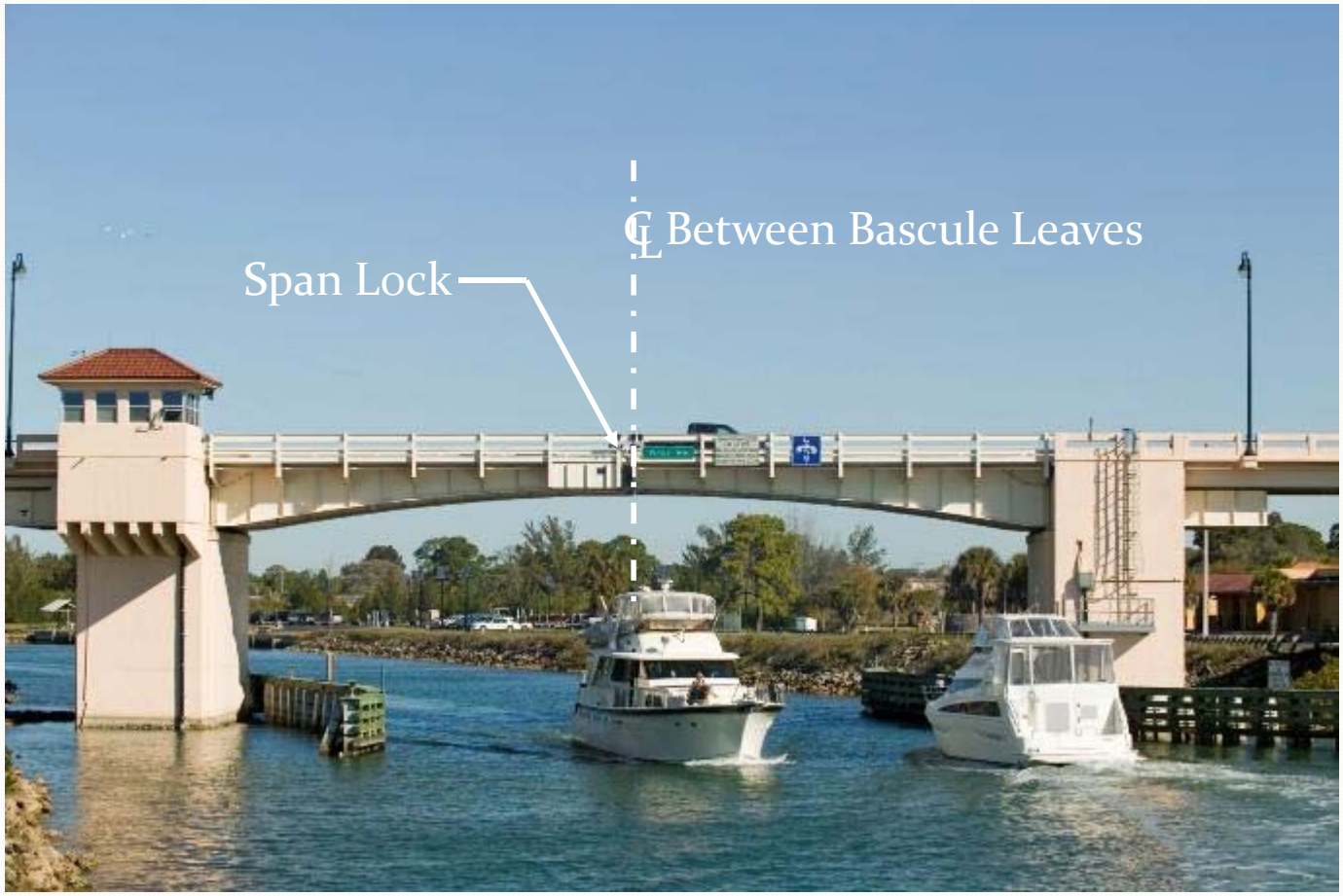

Typical Florida Double Leaf Bascule

Hardesty & Hanover

Span Locks for Double Leaf Bascule Spans

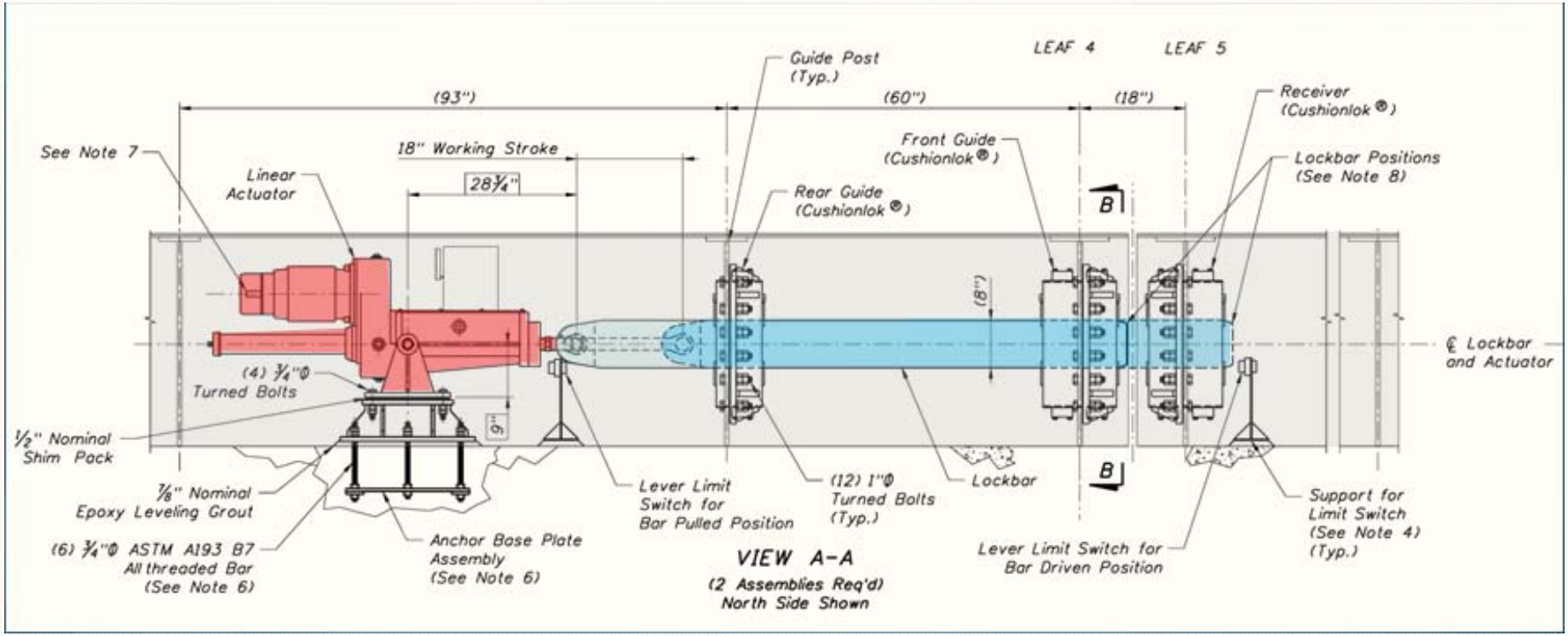

Hardesty & Hanover

Span Locks for Double Leaf Bascule Spans

Transfers Live
Load Shear Loads
Between Opposing
Bascule Leaves

Hardesty & Hanover

Span Locks for Double Leaf Bascule Spans

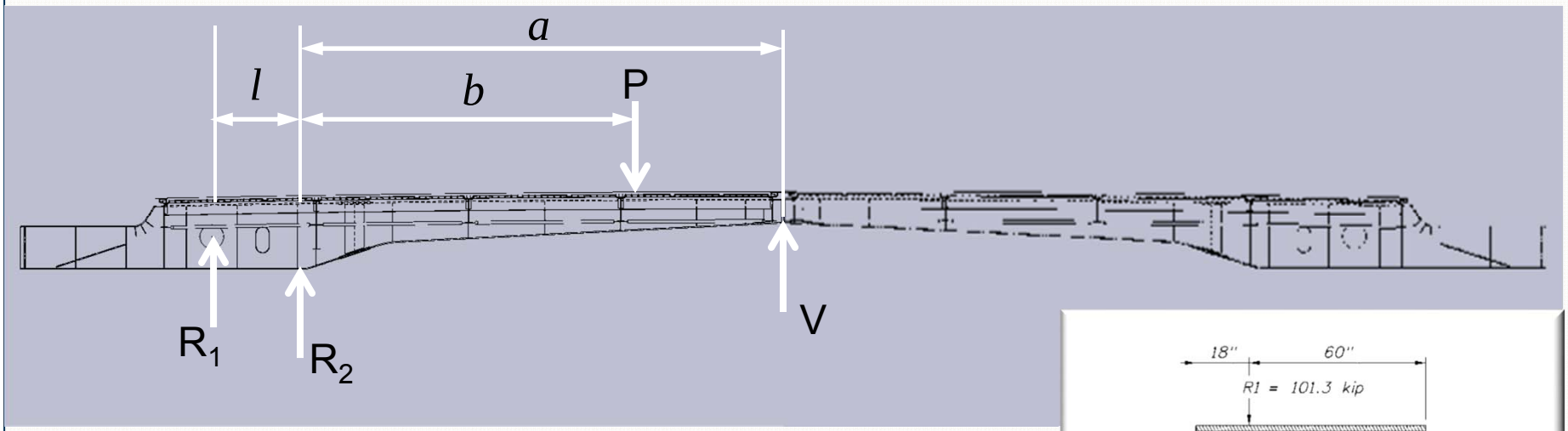

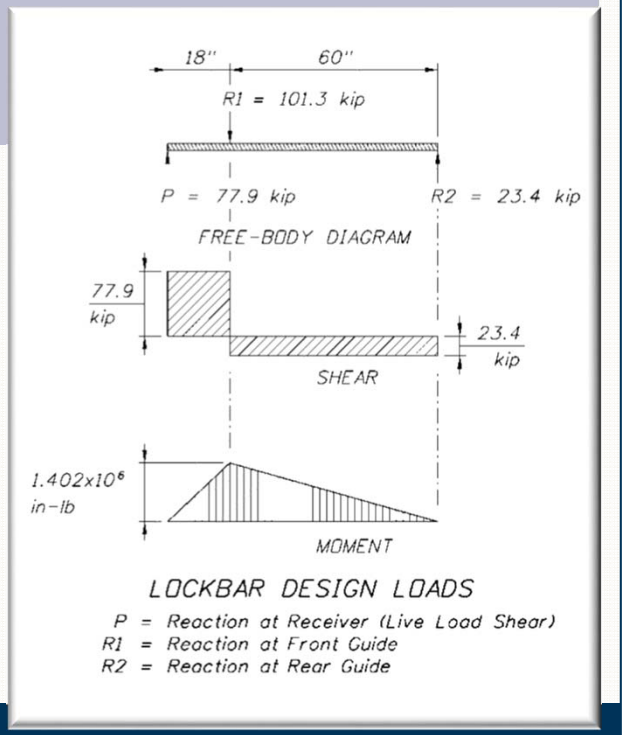

For each contributing load, P:

$$V = \frac{Pb\left[-b^2 + 3ab + 2al\right]}{4a^2\left(l + a\right)}$$

Span Locks for Double Leaf Bascule Spans

Can be located in a variety of locations:

- Floorbeams
- Sidewalk Brackets
- Barrier Mounted

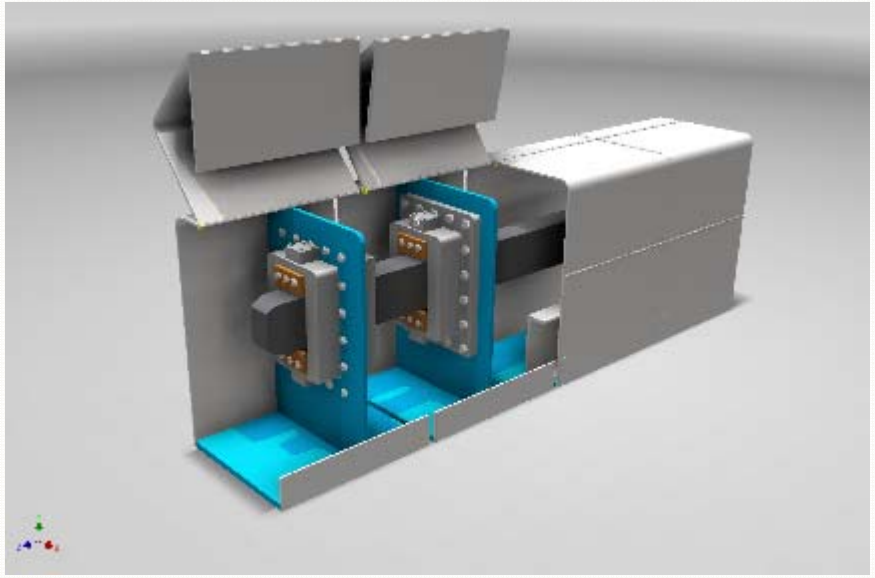

Span Locks for Double Leaf Bascule Spans

Barrier Mounted Span Locks - Simplified Maintenance Access

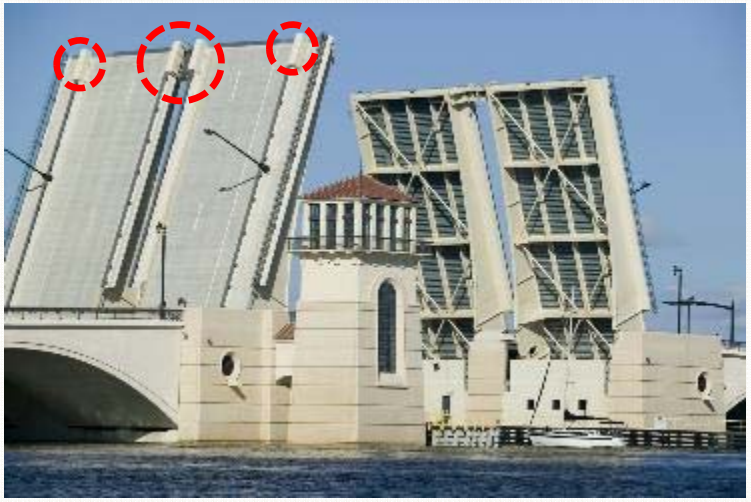

Span Locks for Single Leaf Bascule Spans

- Not designed to transfer shear
- "Safety Latch" - Holds Leaf Down for Unanticipated Uplift/Raising of the Leaf

Span Locks for Double Leaf Bascule Spans

MOMENT LOCK

- Transfers Moment
- Limits Deflection at Center Joint (Advantageous for Light-Rail Traffic)
- Uncommon
- Requires Long Bar or Multiple Bars (i.e.. Woodrow Wilson Bridge)

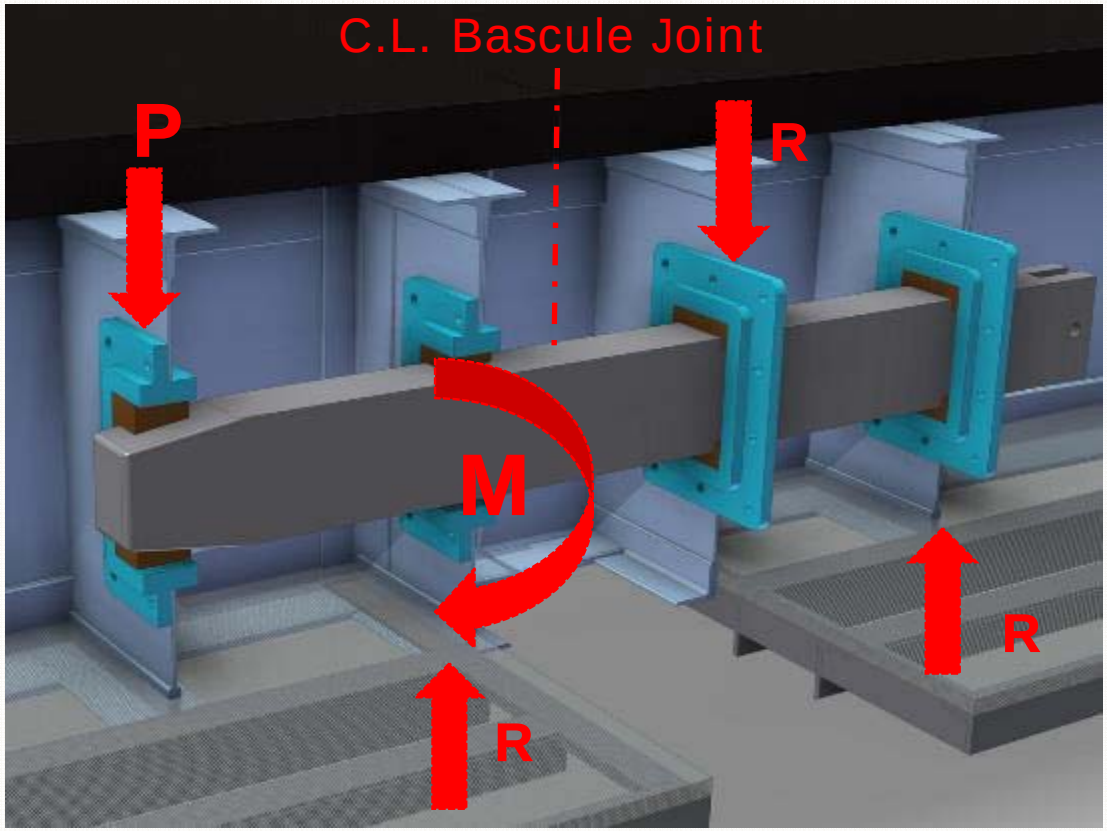

Hardesty & Hanover

Span Locks for Double Leaf Bascule Spans

<u>MOMENT LOCK</u>

- Transfers Moment
- Limits Deflection at Center Joint (Advantageous for Light-Rail Traffic)
- Uncommon
- Requires Long Bar or Multiple Bars (ie. Woodrow Wilson Bridge)

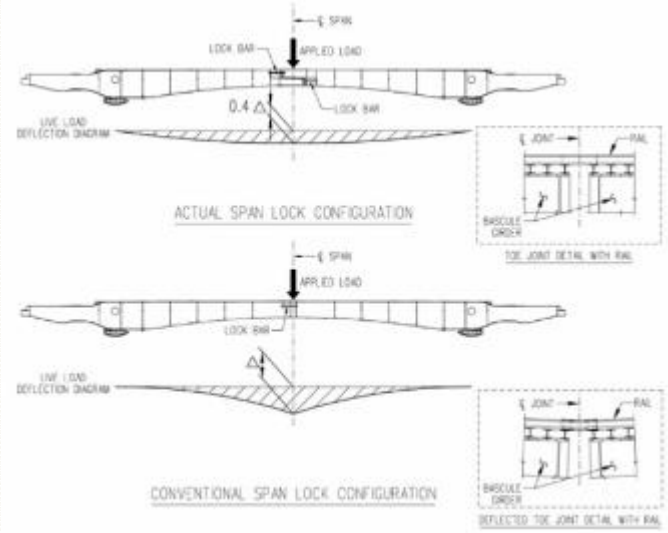

Hardesty & Hanover

Study Objective

Issues with 1950-1980s Era FL Bascule Span Designs

- AASHTO Deflection Criteria not met
- Lack of Stiffness of Lateral Bracing
- Grating Attachment to Superstructure
- Lock Bars Undersized – 4” x 6”, Typical
- Lock Bar Brackets
- Continued Maintenance Shimming
  - Every 6 Months Typical

Study Objective

- Maintain Span Lock Effectiveness to Minimize Differential Deflections.
- Excessive differential deflection increases fatigue and impact loading of structural systems including decks (especially open grid decking), stringers and lateral bracing.
- Resulting excessive impact loads leads to accelerated wear of span locks system which causes to further ineffectiveness.
- Impact loads also induce out of plane bending, or torsional loads.
- Typical existing structural components are not designed for amplitude/period of excessive span deflections and associated impact.
- Effectiveness of span lock systems is considered one of the most crucial features of bascule span design.
- Span lock machinery receives most wear cycles of all bascule span mechanical components.

Study Objective

Develop a *positive grip* span lock system for a double leaf bascule span that reduces maintenance requirements, specifically the simultaneous shimming of the guide/receiver and forward live load shoes.

- Supplement FDOT Movable Bridge Preservation Efforts
- Offset Life Cycle Costs

Hardesty & Hanover

Approach to Study

- Screen & Evaluate Historical Span Locks
- Develop New Concepts – “Outside the Box”
- Engage the Movable Bridge Industry - Contractors, Fabricators
- Evaluate the Concepts

Hardesty & Hanover

Historical Span Locks – Jaw Lock

- Complex
- Requires Deep Girder
- Wear at Jaw Pins & Jaw/Tongue

Burnside Bridge, Portland, OR
Typical for Strauss Bascule Spans

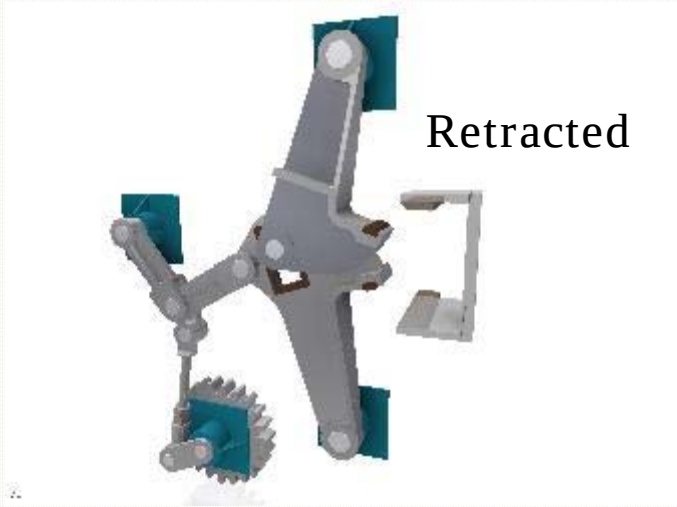

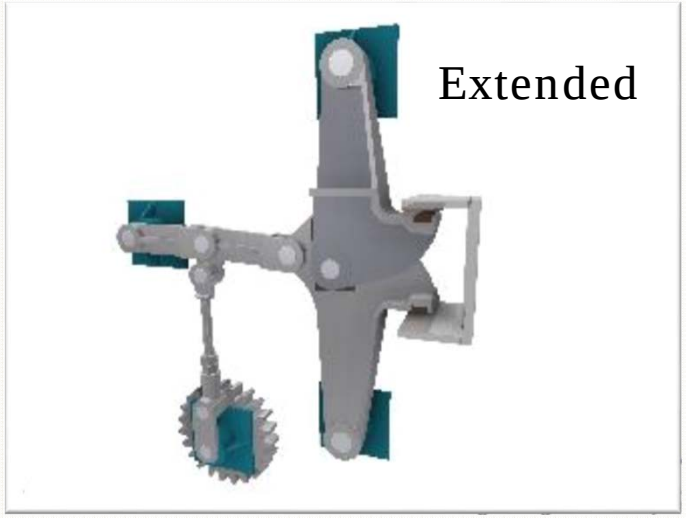

Historical Span Locks – Pincer Type

- Complex
- Wear Connection Pins
- Wear at Tension Pins

NW 17th Ave, Miami, FL (2007)
Original Lock on Miami River Bridges

Closed

Opened

Hardesty & Hanover

Improving Past Concepts – Pincer Type

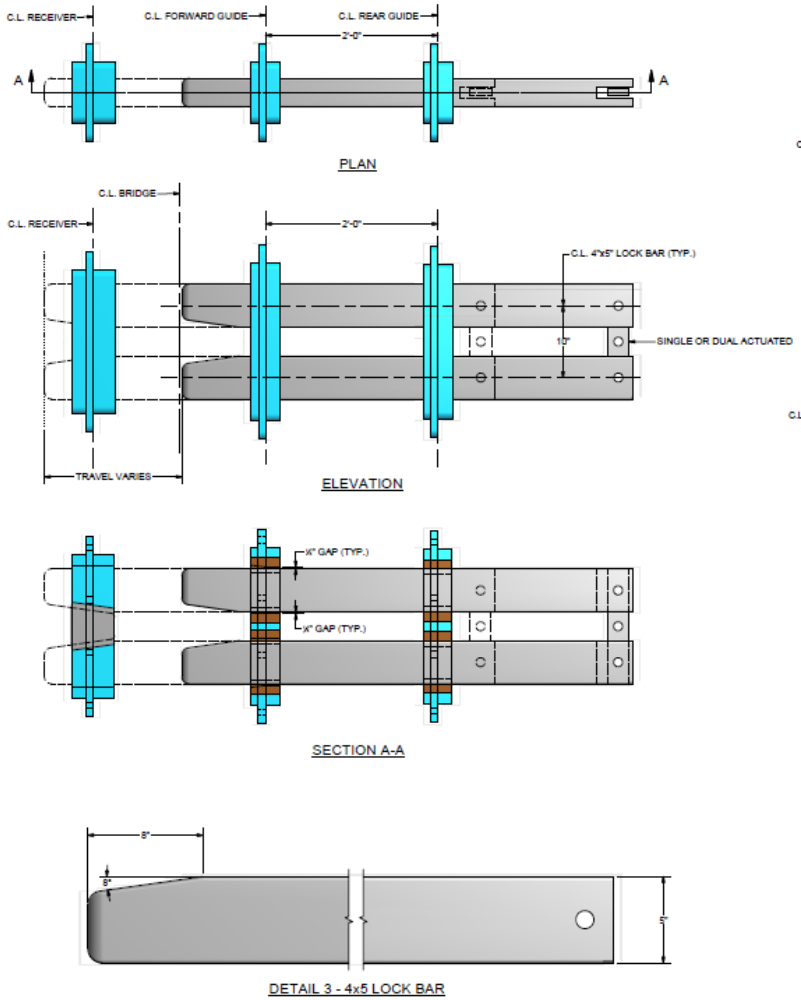

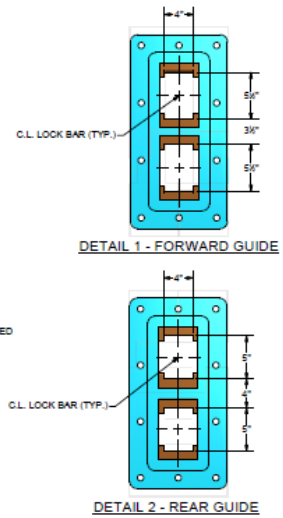

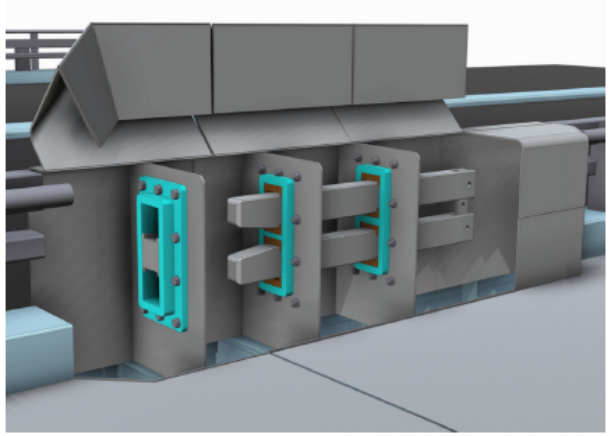

PINCER IN BARRIER

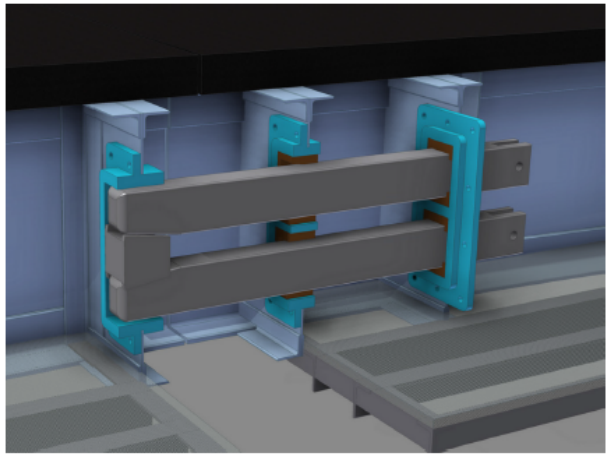

PINCER UNDER SIDEWALK

Improving Past Concepts – Jaw Type

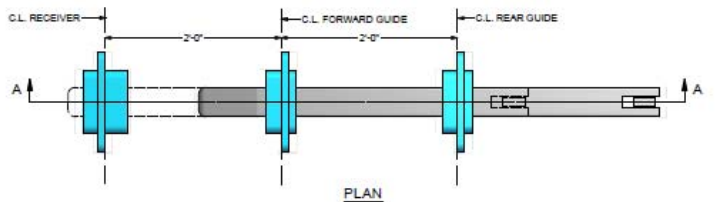

PLAN

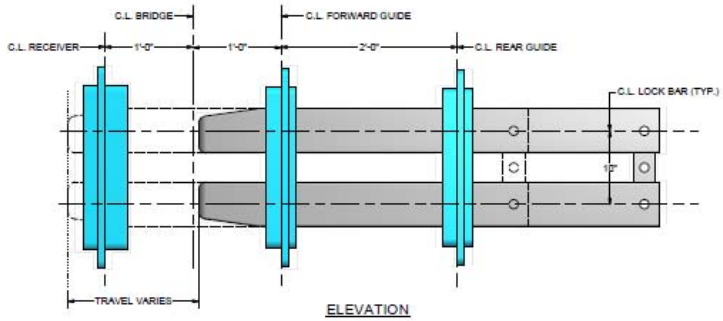

ELEVATION

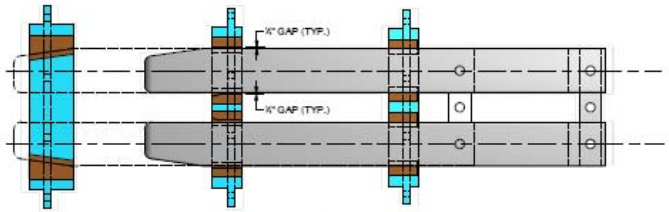

SECTION A-A

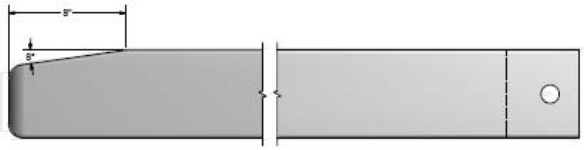

DETAIL 3 - 4x5 LOCK BAR

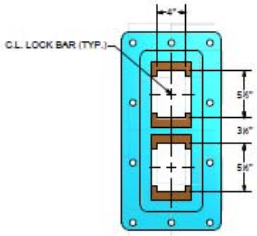

DETAIL 1 - FORWARD GUIDE

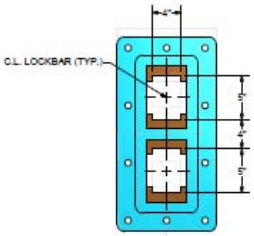

DETAIL 2 - REAR GUIDE

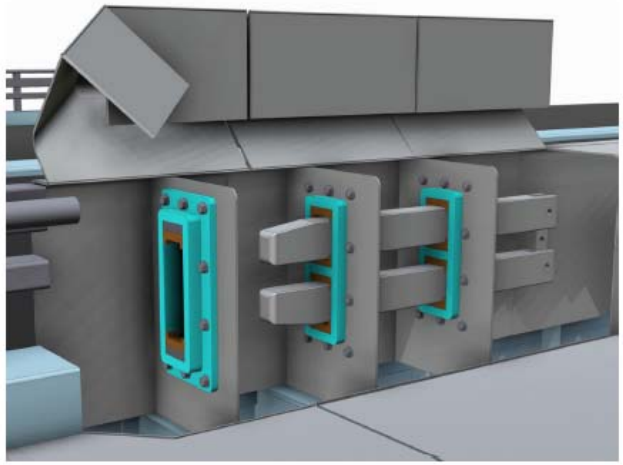

JAW IN BARRIER

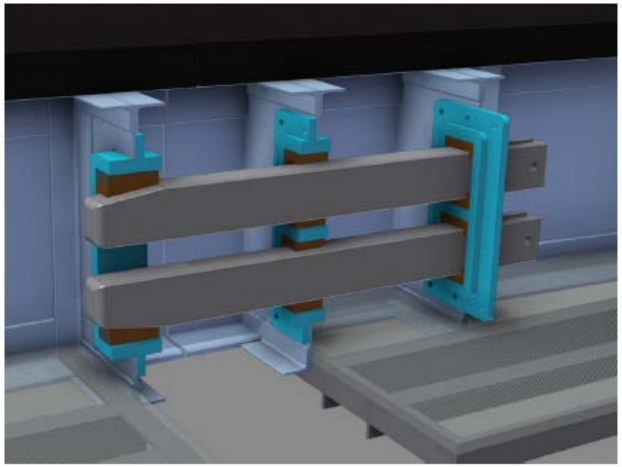

JAW UNDER SIDEWALK

New Concepts – Cam Actuated

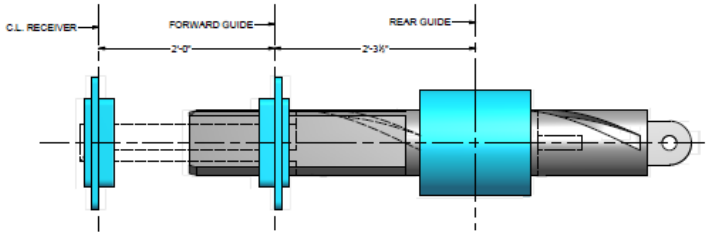

PLAN

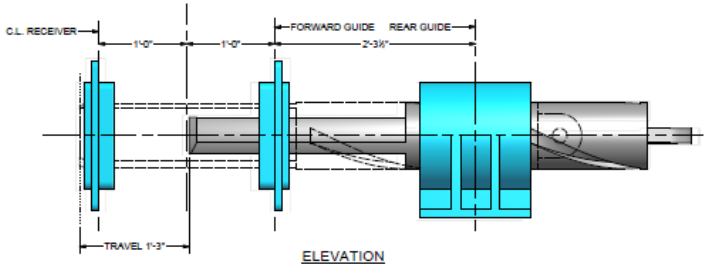

ELEVATION

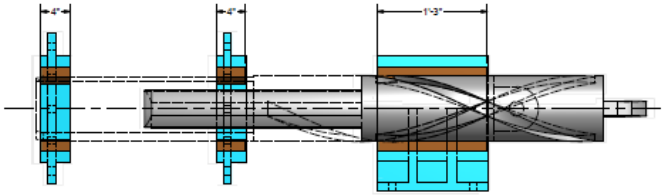

SECTION A-A

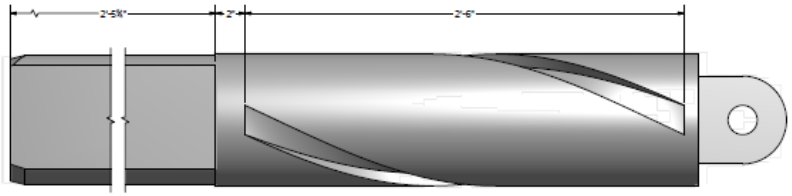

DETAIL 2 - LOCK BAR

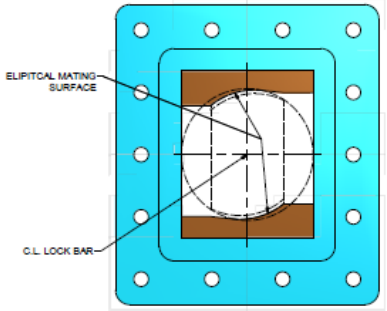

DETAIL 1 - FORWARD GUIDE AND RECEIVER

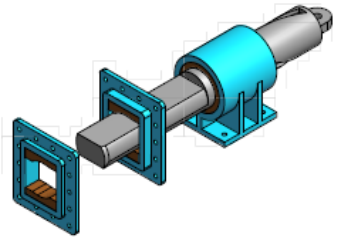

RETRACTED

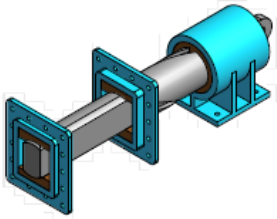

EXTENDED

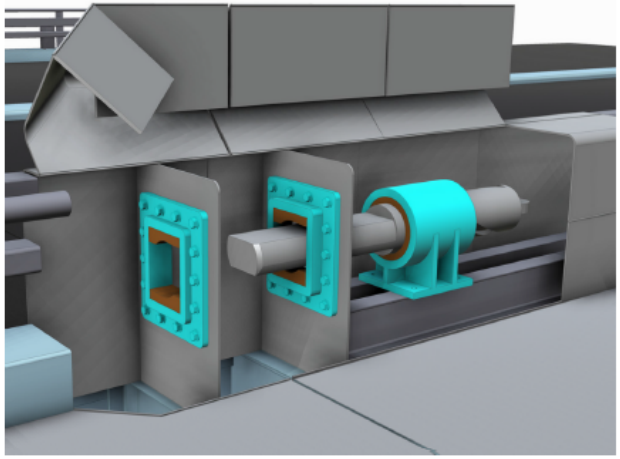

CAM LOCK IN BARRIER

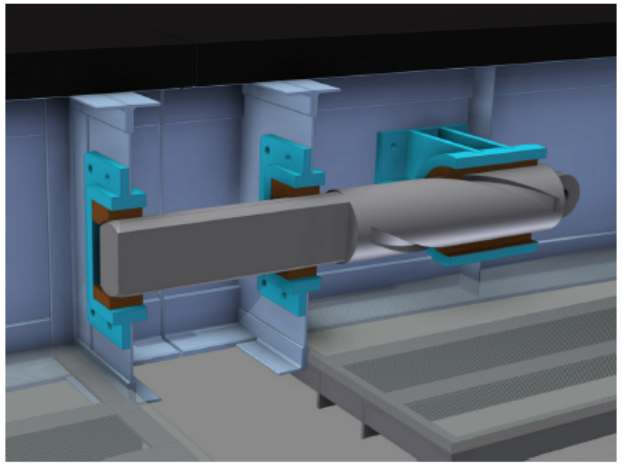

CAM LOCK UNDER SIDEWALK

New Concepts – Moment Lock

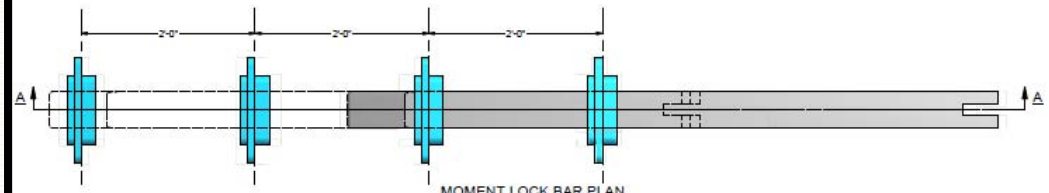

MOMENT LOCK BAR PLAN
SCALE 1/8

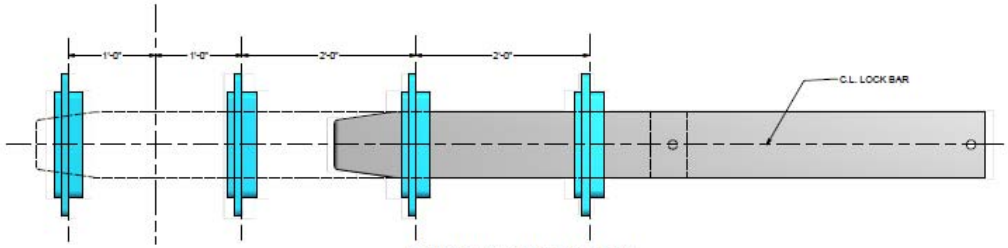

MOMENT LOCK BAR ELEVATION
SCALE 1/8

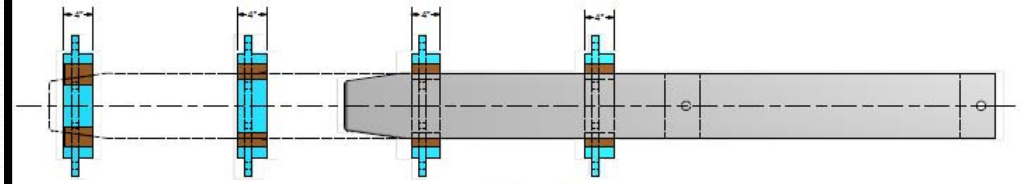

SECTION A-A
SCALE 1/8

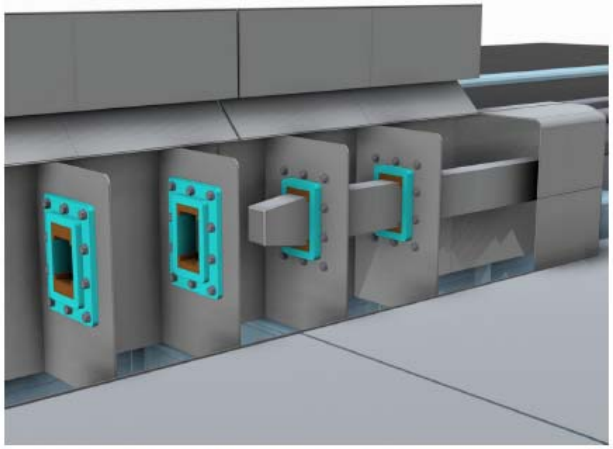

MOMENT LOCK BAR RENDERING IN BARRIER

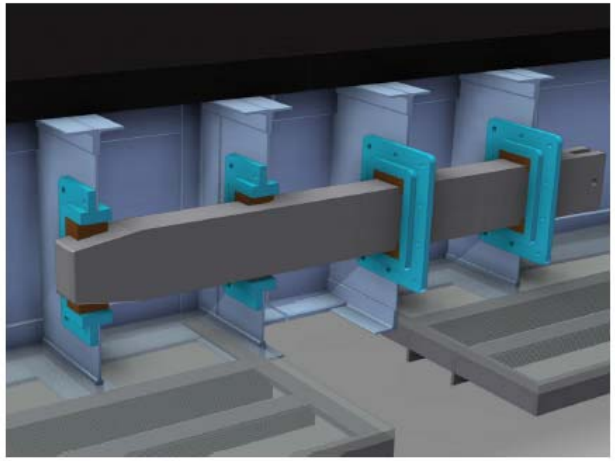

MOMENT LOCK BAR RENDERING UNDERDECK

New Concepts – Fin Brake

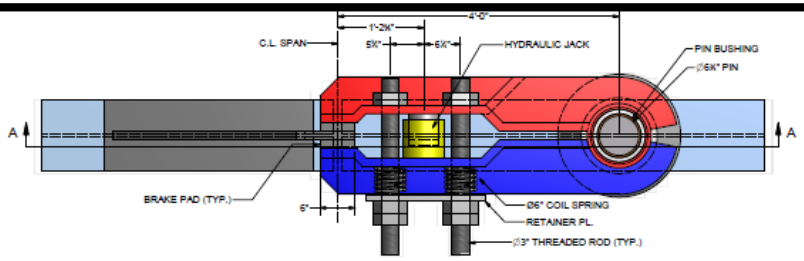

FIN BRAKE PLAN (CLOSED)
SCALE 1:10

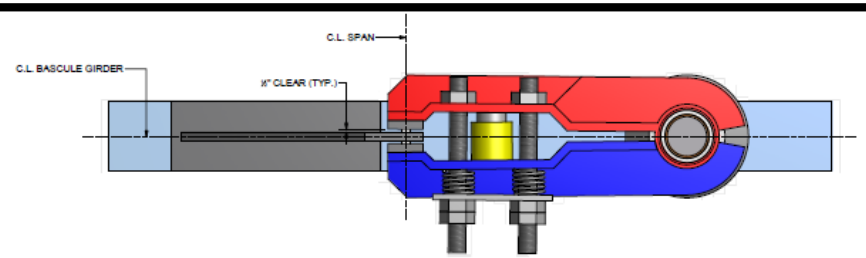

FIN BRAKE PLAN (OPENED)
SCALE 1:10

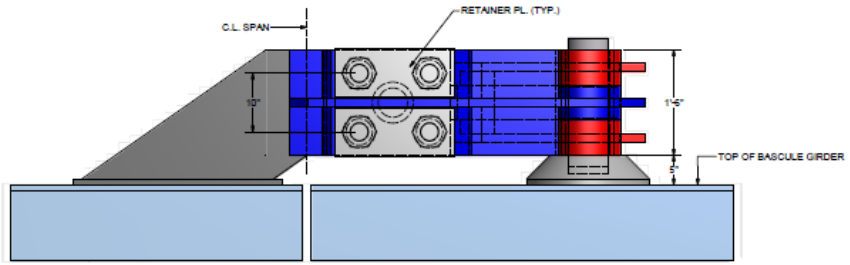

FIN BRAKE ELEVATION (OUTSIDE)
SCALE 1:10

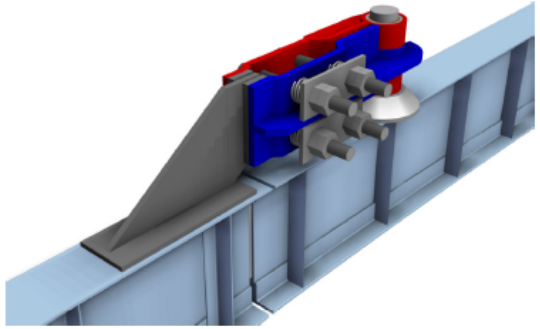

FIN BRAKE RENDERING (OPENED)

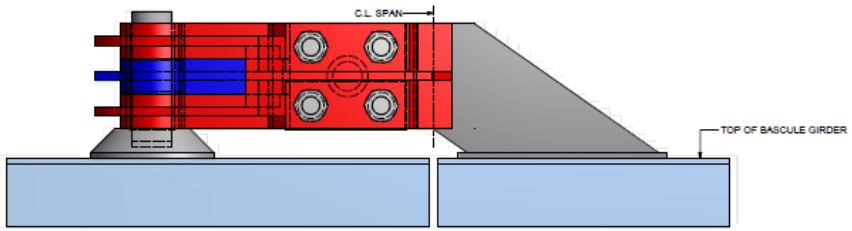

FIN BRAKE ELEVATION (INSIDE)
SCALE 1:10

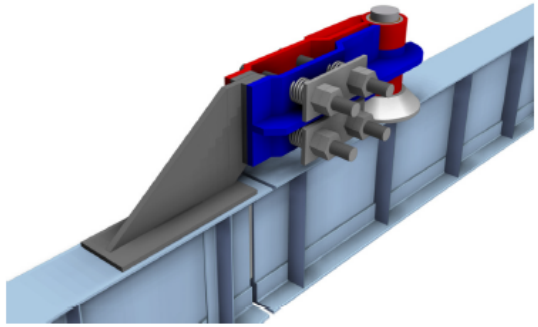

FIN BRAKE RENDERING (CLOSED)

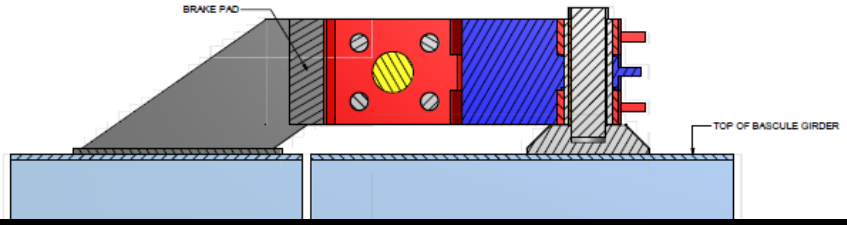

New Concepts – Friction Lock

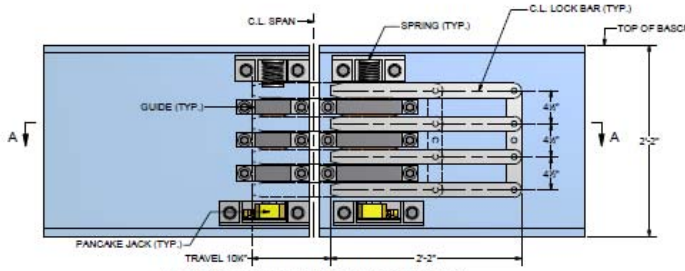

FRICTION LOCK ELEVATION (RETRACTED)
SCALE 1:8

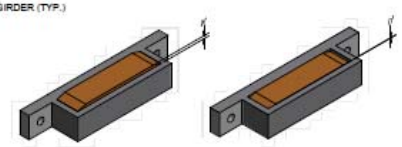

DETAIL 1 - FREE FLOATING SPACER LIMITS
SCALE 1:4

FRICTION LOCK RENDERING (RETRACTED)

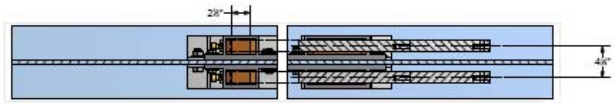

SECTION A-A
SCALE 1:8

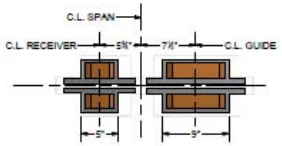

GUIDE PLAN
SCALE 1:8

FRICTION LOCK RENDERING (EXTENDED)

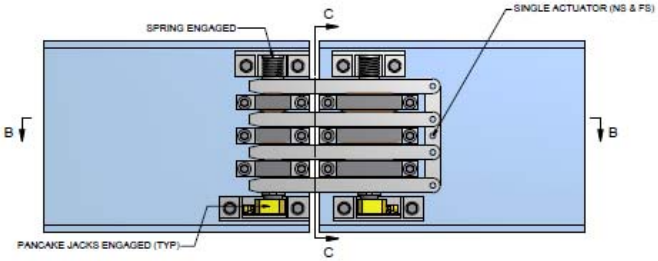

FRICTION LOCK ELEVATION (LOCKED)
SCALE 1:8

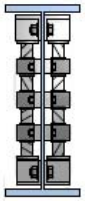

SECTION C-C
SCALE 1:8

FRICTION LOCK RENDERING (LOCKED)

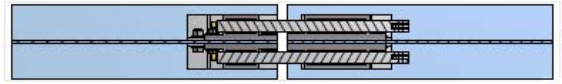

SECTION B-B
SCALE 1:8

New Concepts – Clamping Lock

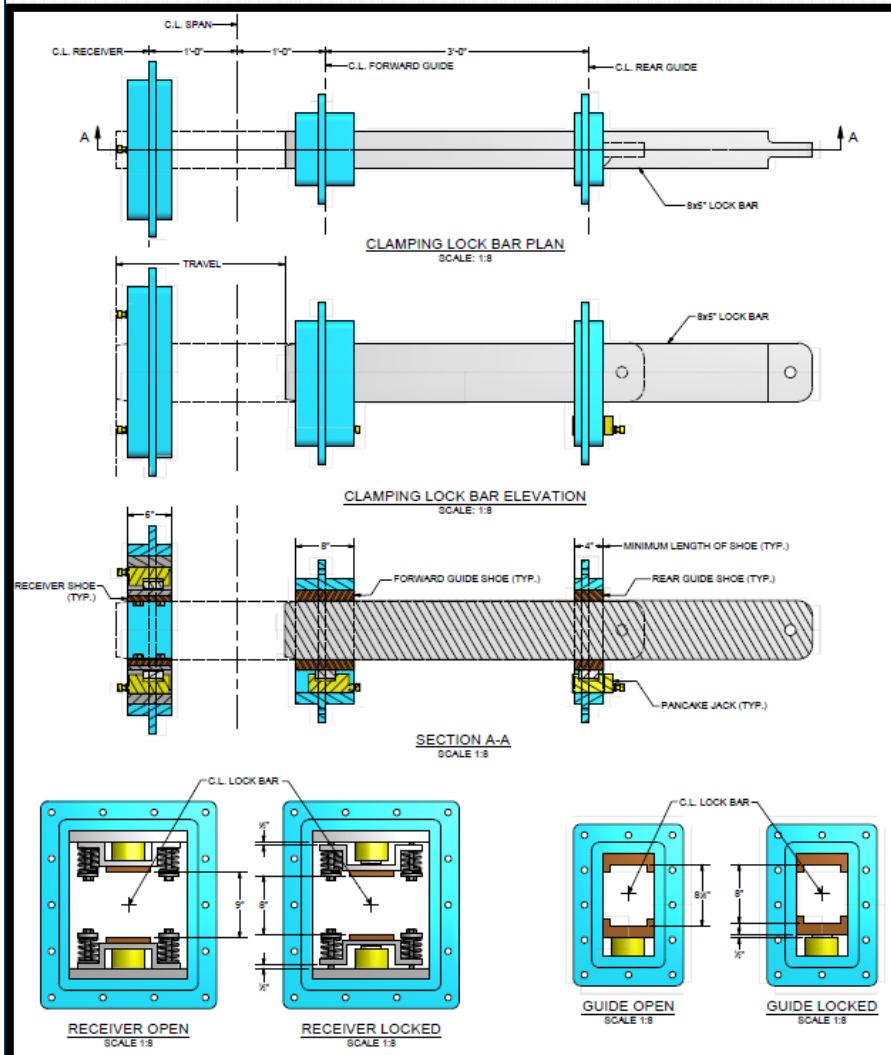

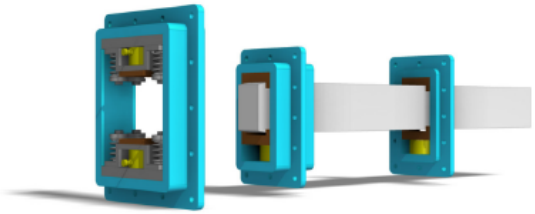

CLAMPING LOCK RENDERING

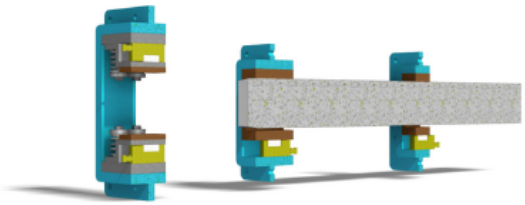

CLAMPING LOCK - CUT VIEW

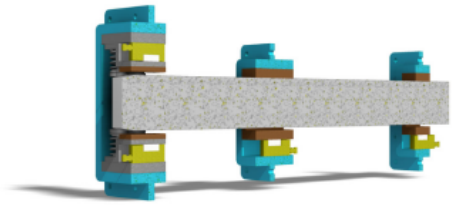

CLAMPING LOCK - EXTENDED

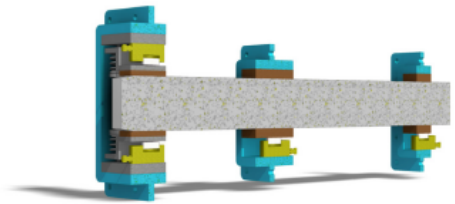

CLAMPING LOCK - LOCKED

New Concepts – Internally Expanding

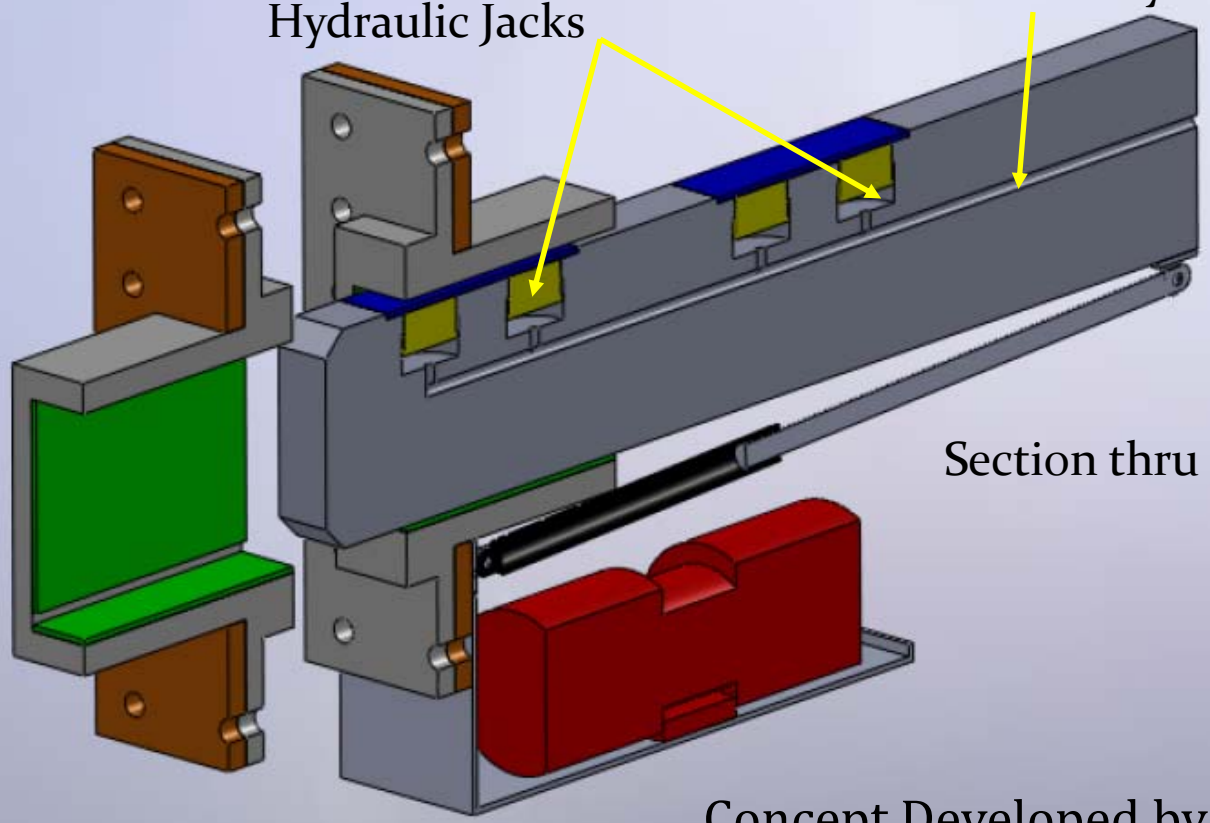

Concept Developed by EHM Co.

Evaluation

SPAN LOCK CONCEPTS EVALUATION CRITERIA

	CRITERIA (HIGH SCORE)	CRITERIA (LOW SCORE)	WEIGHT
EFFECTIVENESS			20
Vertical Deflection Under Live Load			
Capacity to transfer live load shear loads	Solid (small gap) connections	Pin, spring or cushion will transfer less shear than solid bar	
Resists leaf tip rotation	Two receiving sockets		
Allows for thermal expansion		clamping / springs and taper that result in horiz friction	
MAINTENANCE			20
Degree of Installation Complexity	Easy to install		
Maintenance Access		harder to access = 2	
Compexity of replacement parts			
Frequency of replacing wearing components	Clamps = 5 (self adjusting)	taper = 4 (will get some wear at spherical interface)	
EMERGENCY DISENGAGEMENT			15
Time of operation	single step operation = shorter time	more bars to hang up should take longer / also mult steps	
Simplicity	one bar is simplest = 4	lower as more comples	
Access	if it can be barrier mounted	roadway	
Size of maintenance staff required			
Required (special) equipment for procedure	1 step procedure = 4	multi step and/or heavy force required is 2 and 1 resp	
CONSTRUCTABILITY			15
Geometric Complexity		Spherical shapes & multiple parts scored lower	
Construction Tolerance requirements	Large receiver opening/expand bar	LC3 fit with housing / web & RC9 fit bar and shoe	
Testing requirements	one step interlock	testing	
Required modifications to structural interface			
Control system modification requirements	one step = 5, two step = 4		
Adaptability to Existing Structures			
Adaptablity to New Structures			
DURABILITY			30
Estimated service life	duration between repairs	duration between repairs	
Component wear accomodation	infinate adjustment = clamp lock	taper = 4, as the sphere will wear/no adjustemnt	
Synopsis of potential necessary repairs		repairs	

Hardesty &Hanover

Evaluation

Span Lock Concepts Evaluation Matrix

	STANDARD LOCK BAR	D4 Span Lock Version 1.0	CLAMPING LOCK	INTERNALLY EXPANDED LOCK	FRICTION LOCK	FIN BRAKE	IMPROVED TAPER	SELF ALIGNING, ROTATING RECEIVER	CYLINDRICAL NOSE-RECEIVER	PINCER	JAW	CAM	MOMENT LOCK BAR
EFFECTIVENESS (30%)													
Vertical Deflection Under Live Load	1	3	3	3	3	4	3	3	1	4	4	4	5
Limiting Impact During Shear Transfer due to Live Loads	1	3	3	3	3	4	3	3	1	4	4	4	5
Performance - leaf tip rotation	1	3	3	3	1	1	4	4	5	1	1	1	5
Allows for thermal expansion	5	3	3	3	3	1	3	3	5	1	1	3	5
MAINTENANCE (25%)													
Maintenance Access	5	5	5	5	2	1	2	2	5	2	2	5	2
Maintainability by Size and Weight	3	3	3	3	5	5	2	2	3	3	3	3	1
Maintainability by Number of Components	5	3	3	3	3	1	2	2	2	4	4	2	4
Availability of Replacement Parts (Not Including Bars)	3	3	3	3	3	3	2	2	1	3	3	1	3
Frequency of replacing wearing components	1	3	3	3	3	2	3	3	2	3	3	1	3
Lubrication Required	3	4	4	4	4	5	4	4	1	2	2	1	3
EMERGENCY DISENGAGEMENT PROCEDURES (10%)													
Speed of Operation	5	3	2	3	2	5	3	3	5	1	1	2	4
Ease of Access (Accessibility for Manual Retraction)	4	3	2	3	2	1	3	3	4	2	2	2	4
Size of maintenance staff required	4	3	3	3	2	3	3	3	4	2	2	3	4
Required (special) equipment for procedure	5	5	5	5	5	1	5	5	5	3	3	3	5
CONSTRUCTABILITY (10%)													
Degree of Installation Complexity	2	4	4	4	2	5	4	3	3	1	1	1	1
Geometric Complexity	5	4	4	4	3	3	1	2	2	2	2	1	5
Construction Tolerance requirements	2	3	3	3	3	2	5	4	2	1	1	1	1
Testing requirements	5	3	3	3	3	1	3	3	3	3	3	3	5
structures	5	3	3	5	1	1	3	3	3	2	2	3	1
Control system modification requirements	5	3	1	3	1	5	3	3	5	5	5	5	5
Adaptability to New Structures	5	5	5	5	3	3	5	5	5	1	1	5	1
DURABILITY (25%)													
Estimated service life	2	4	4	4	4	2	4	4	2	4	4	4	4
Component wear accommodation (automatic)	1	5	5	5	5	5	5	5	3	5	5	3	1
Anticipated Repairs	5	3	3	3	2	1	3	3	5	4	4	2	4
COST													
Cost Relative to Standard Span Lock (%)	100.00%	125.00%	189.00%	134.00%	189.00%	232.25%	133.45%	130.83%	128.95%	168.00%	168.00%	153.00%	284.50%
Life cycle cost													
SCORING													
Average Weighted Score	2.97	3.48	3.40	3.48	3.01	2.69	3.28	3.23	3.11	3.00	3.00	2.72	3.55
Weighted score (Avg Score/Relative Cost)	**2.97**	**2.79**	**1.80**	**2.60**	**1.59**	**1.16**	**2.46**	**2.47**	**2.41**	**1.78**	**1.78**	**1.78**	**1.25**

Hardesty & Hanover

Top 2 Contenders – Internally Expanding vs. Clamping

Internally Expanding

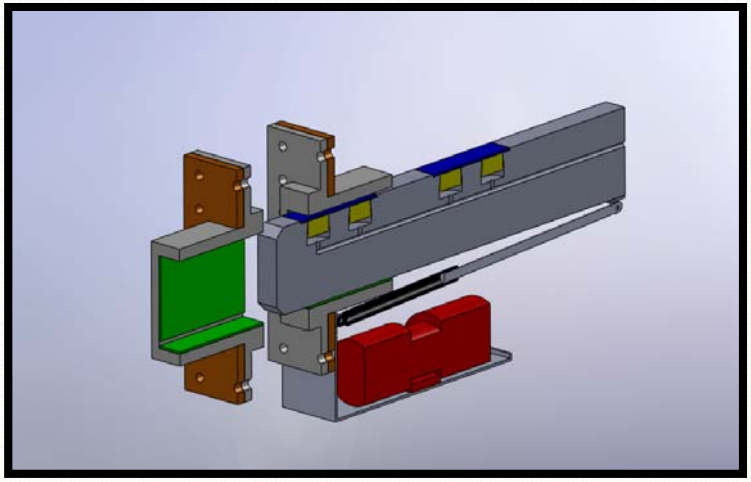

Disadvantage: Loss of Lock Bar Capacity Due to Jack Housings

Clamping Lock

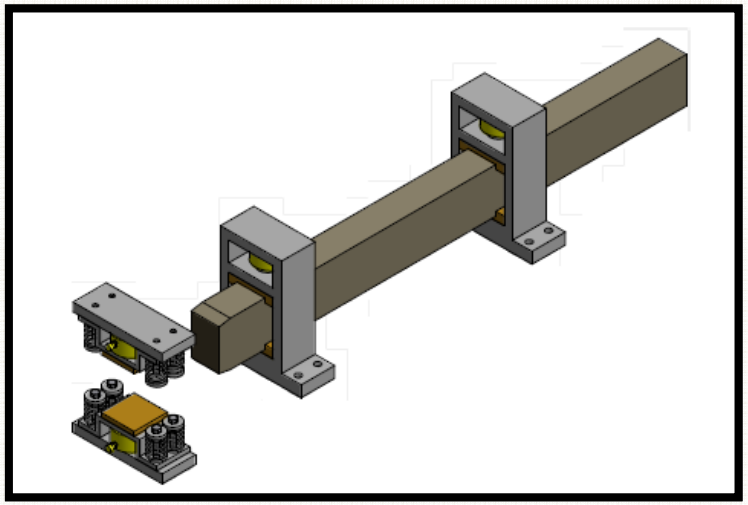

Disadvantage: Need Power, HPUs and Power at Far Leaf to Engage Jacks at Receiver

Hardesty & Hanover

Hybrid Lock = Clamping + Internally Expanding

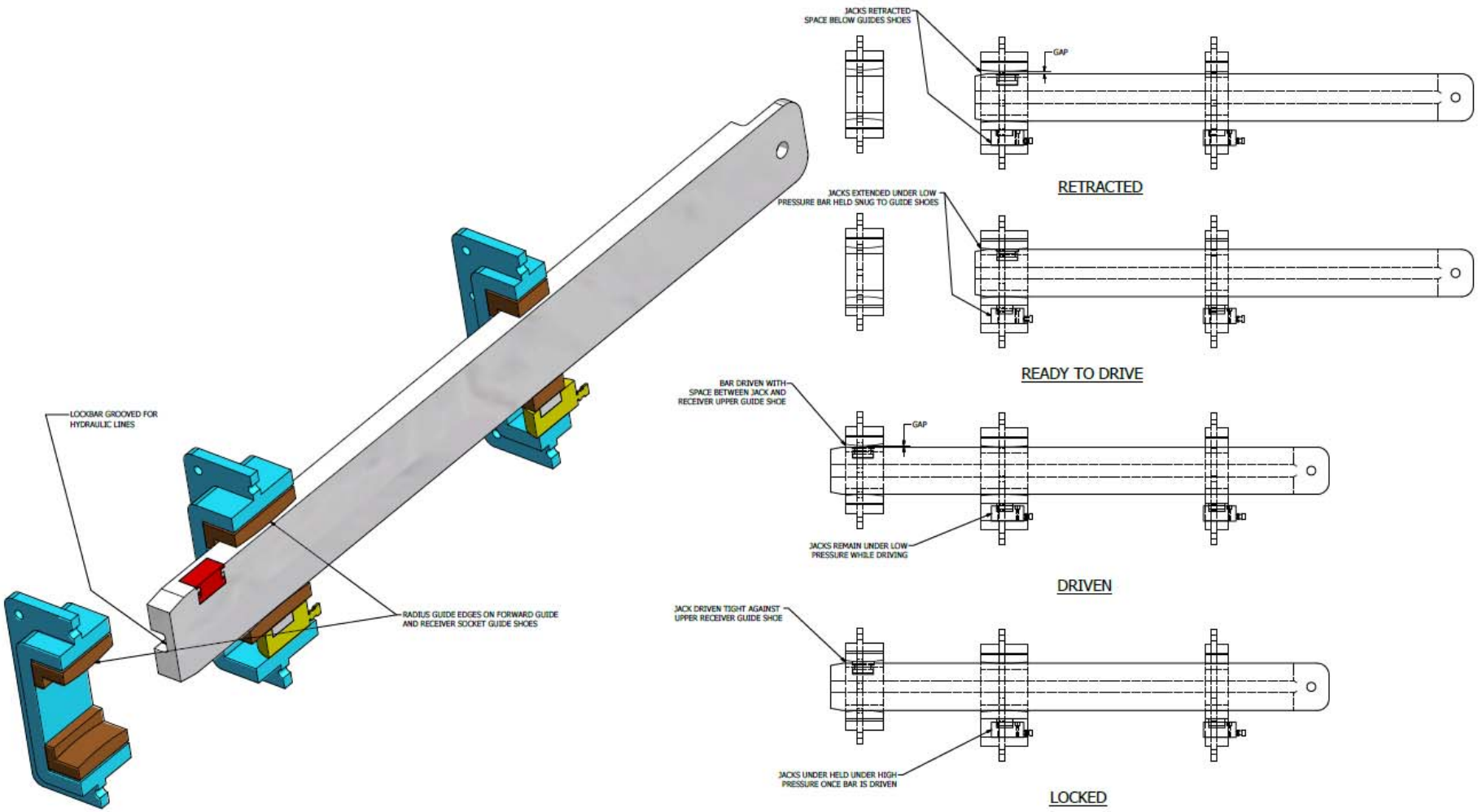

Hybrid Lock Concept

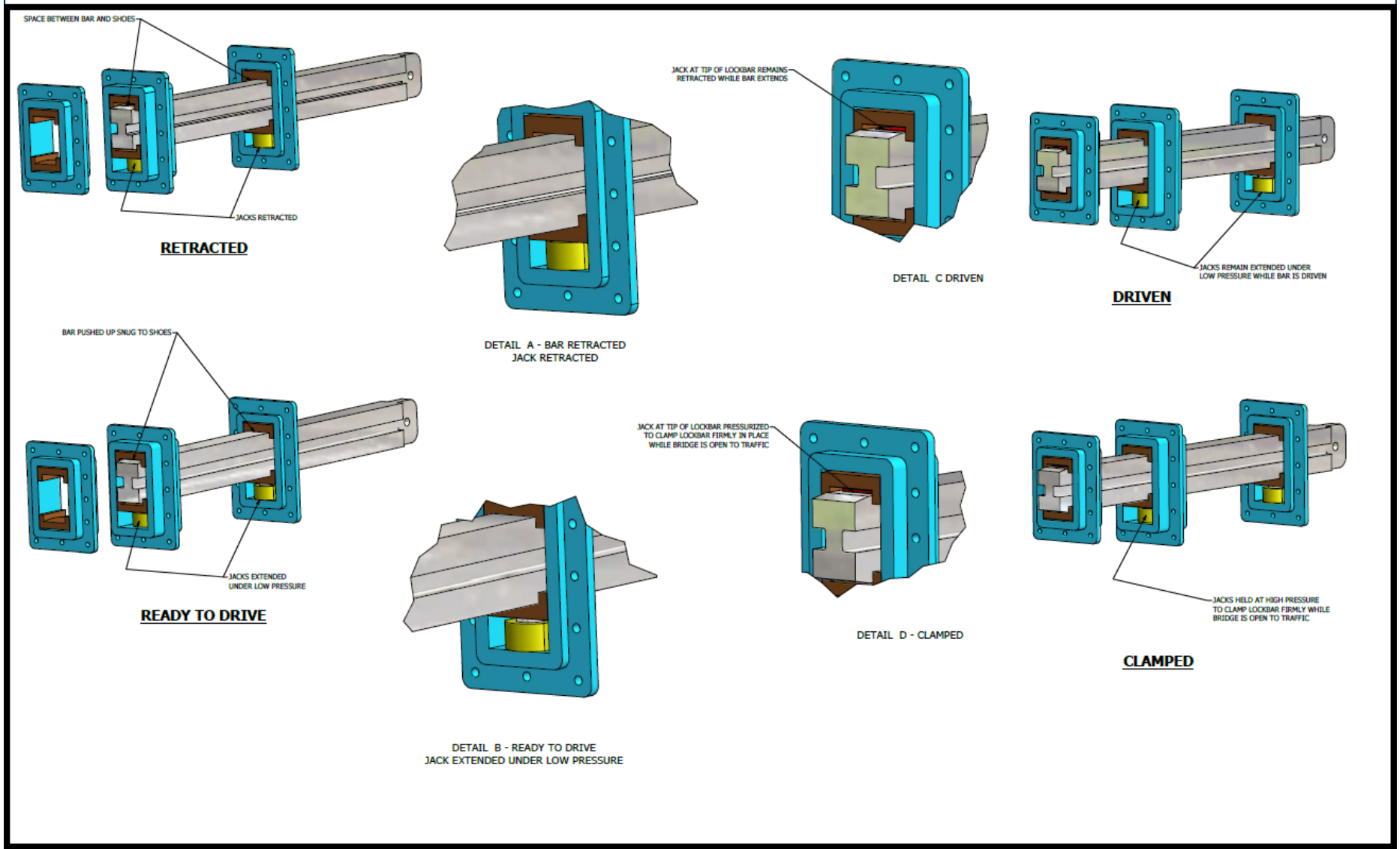

Selected Concept – Hybrid Lock (a.k.a. D4 Span Lock Version 1.0)

- Utilize External Jacks to Clamp Front and Rear Guides to Lock Bar.
- Clamping Piston Internal to Lock Bar to Engage Receiving Socket.
- All Mechanical/Electrical Power/Control for Span Lock on Near Leaf.
- Majority of Lock Bar Cross Section Maintained.

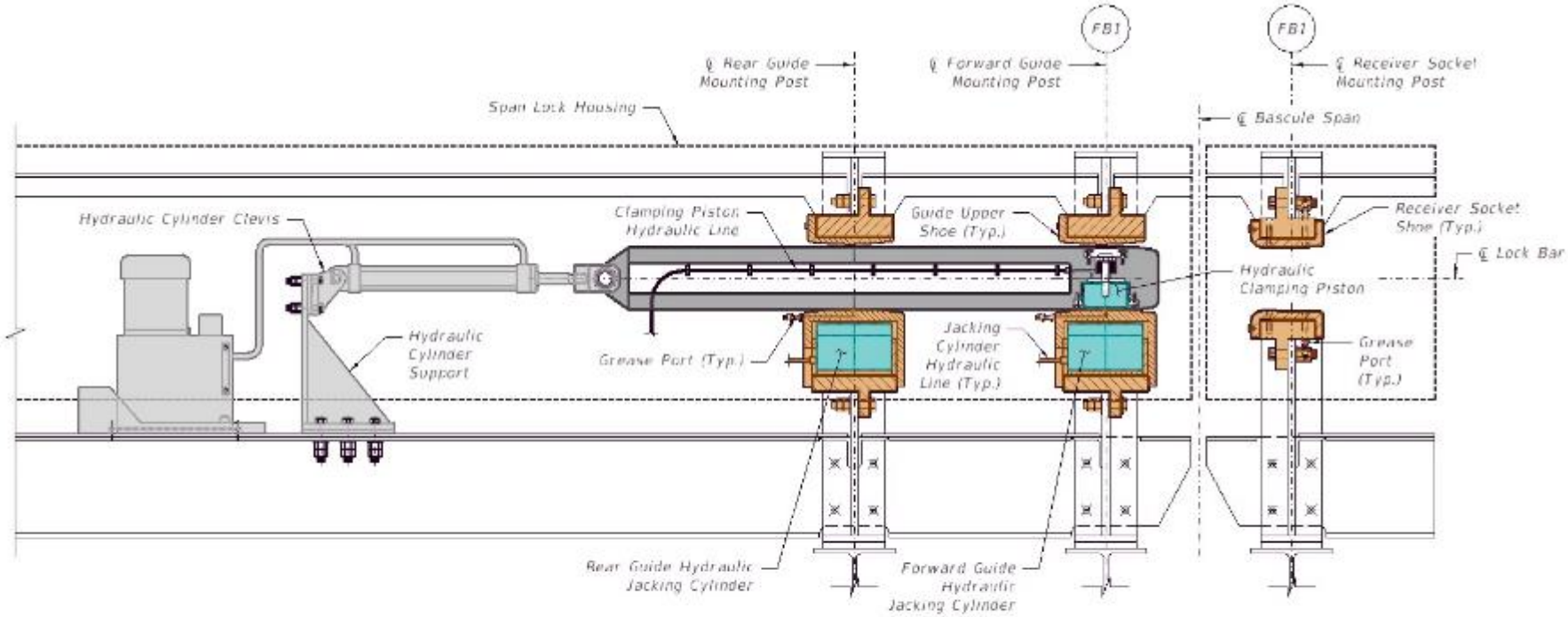

ELEVATION

BARRIER MOUNTED SPAN LOCK

(Lock Bar Shown Retracted)

(Clamping Piston and Jacking Cylinders Shown Disengaged)

Selected Concept – Hybrid Lock
(a.k.a. D4 Span Lock Version 1.0)

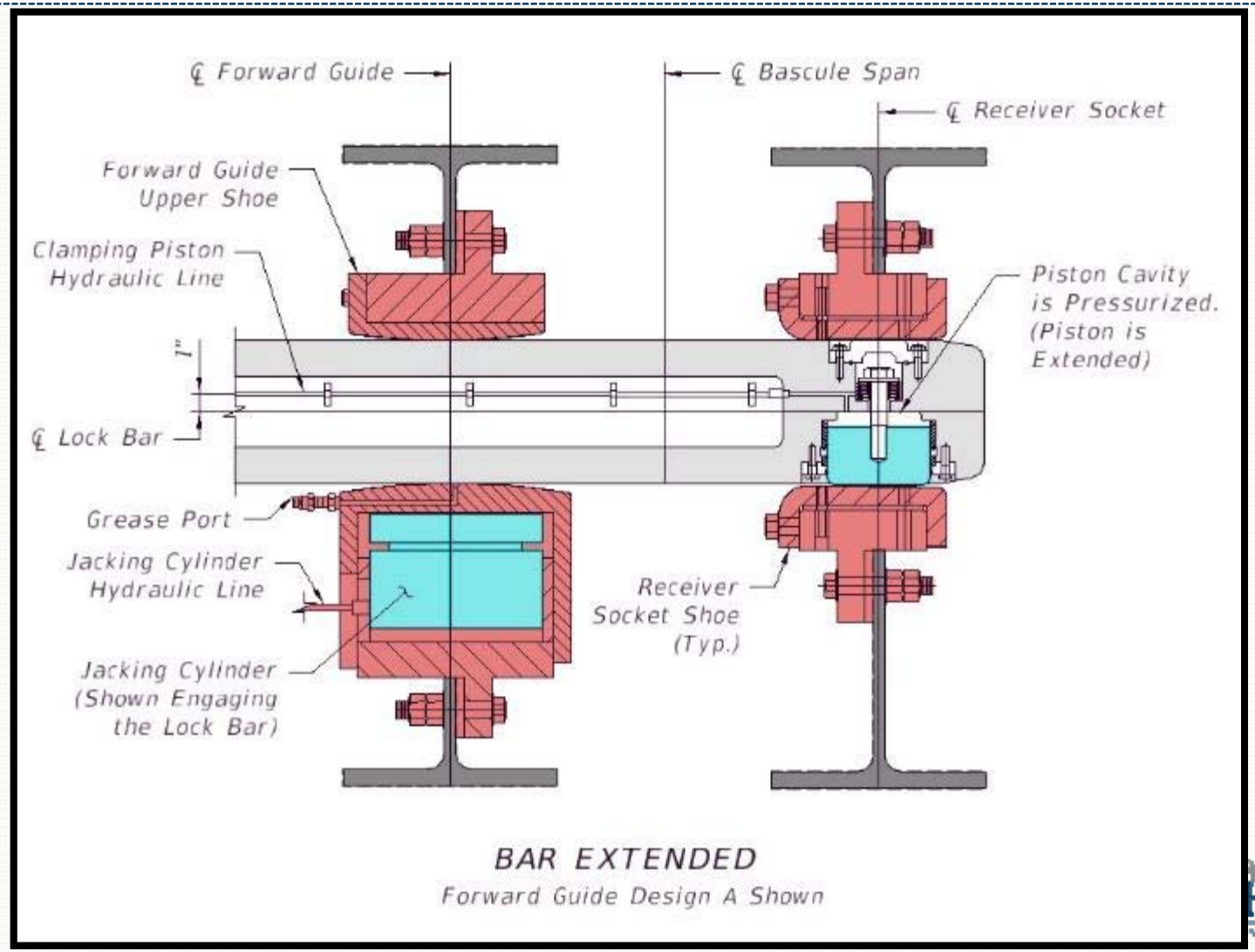

Selected Concept – Hybrid Lock
(a.k.a. D4 Span Lock Version 1.0)

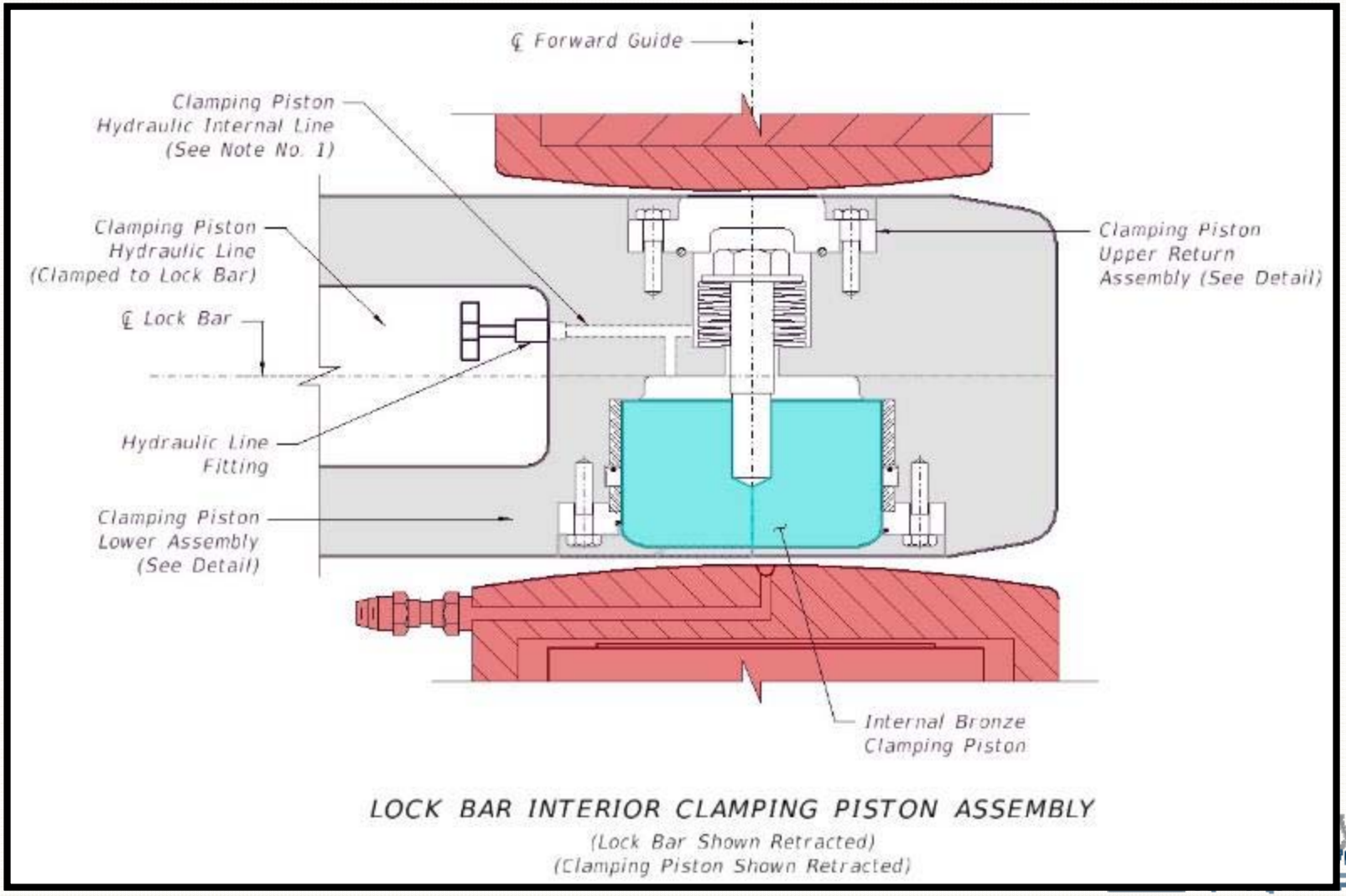

Future Study and Testing

Next Steps…

- Continue to Work on Details
  - Eliminate Clamping Jack at Rear Guide
  - Access to Seals at Forward Guide Jacking Cylinder
  - Address Differential Jack/Piston Loads Between Receiver and Forward Guide
  - Complete Lock Bar Assembly (Piston, Jacks) as a Spare Part
- Build a Prototype and Shop Test
  - Preliminary Cost Estimate - $150k
  - Comprehensive System Hydraulic Pressure Testing
- Field Testing – Single Leaf Bascule to Test Hydraulic System
  - Candidate: SR 84 over South Fork of New River
- Double Leaf Bascule Testing
  - Candidate: Atlantic Blvd over the ICWW

Hardesty & Hanover

Questions/Discussion?

Hardesty & Hanover