FLORIDA DEPARTMENT OF TRANSPORTATION

STRUCTURES DETAILING MANUAL

FDOT STRUCTURES MANUAL
VOLUME 2
JANUARY 2017

Table of Contents

Table of Contents i
Introduction I-1
I.1 General I-1
I.2 Format (Rev. 01/17) I-1
I.3 Coordination I-2
I.4 Quantity Calculations (Rev. 01/17) I-2
I.5 Summary of Structures Quantities Boxes I-2
I.6 Phase Submittal Requirements I-3
1 Drafting and Printing Requirements 1-1
1.1 General 1-1
1.2 Drafting Requirements 1-1
1.3 Quality Assurance 1-1
1.4 Drawing Revisions 1-2
2 Detailing Instructions 2-1
2.1 Detailing Aids 2-1
2.2 Structures Identification Numbers 2-1
2.3 Bridge Lengths and Horizontal Control 2-2
2.4 Financial Project Number and Federal-Aid Project Number 2-2
2.5 Initial Block 2-2
2.6 Title Block 2-2
2.7 Orthographic Projection 2-3
2.8 Views, Sections, Details and Notes 2-3
2.9 Scales 2-4
2.10 Strength and Contrast of Lines 2-4
2.11 Dimensioning 2-4
2.11.1 General 2-4
Figure 2.11.1-1 Stirrup Bar Detail 2-5
Figure 2.11.1-2 Elevation Callouts 2-5
2.11.2 Dimensions and Text 2-6
Figure 2.11.2-1 Compressed Dimensions 2-6
Figure 2.11.2-2 Text Orientation 2-7
Figure 2.11.2-3 Dimensions 2-8
Figure 2.11.2-4 Angles 2-8
Figure 2.11.2-5 Radii 2-9
Figure 2.11.2-6 Bevel Symbol Detail 2-9
2.11.3 Dimensioning Precision 2-9
2.12 Symbols and Patterns (Rev. 01/17) 2-10
2.13 Architectural Treatment 2-10

2.14 Skew Angle and Complementary Skew Angle 2-11
Figure 2.14-1 Skew Angle and Complementary Angle 2-11
2.15 Using Standard Abbreviations. 2-11
2.16 Arrows (Rev. 01/17) 2-11
Figure 2.16-1 Labeling Arrow Detail 2-12
3 Composition of Plan Set 3-1
3.1 Structures Sheet Numbers (Rev. 01/17) 3-1
3.2 Sheet Titles 3-3
3.3 Sheet References for Multiple Bridges and/or Structures 3-3
3.4 Sheet Numbers on Projects with Alternate Structure Types 3-3
3.5 Reference Drawing Number Box (Rev. 01/17) 3-3
3.6 Phase Submittal Requirements. 3-4
3.7 Use of FDOT Design Standards 3-4
3.8 Existing Plans (Rev. 01/17) 3-5
4 Concrete Components 4-1
4.1 General (Rev. 01/17). 4-1
4.2 Items Embedded in Concrete Components 4-1
4.3 Reinforcing Steel. 4-1
Figure 4.3-1 Reinforcing Bar Callout Detail 4-2
4.3.1 Maximum Bar Spacing 4-2
4.3.2 Minimum Bar Spacing 4-3
4.3.3 Minimum Concrete Cover 4-3
4.3.4 Fit and Clearance 4-3
4.3.5 Bar Splicing 4-3
4.3.6 Dowels. 4-4
4.3.7 Bars in Section 4-4
4.3.8 Hook Bars 4-4
4.3.9 Maximum Reinforcing Bar Lengths 4-5
4.3.10 Reinforcing Bar Lists 4-5
4.3.11 Maximum Reinforcing Steel Bar Sizes 4-6
Table 4.3.11-1 Maximum Reinforcing Steel Bar Sizes 4-6
4.4 Concrete Surface Finishes (Rev. 01/17) 4-6
Figure 4.4-1 Example Surface Finish Depictions on Grade Separation Structures. 4-7
Figure 4.4-2 Example Surface Finish Depictions on Waterway Crossings and Railroad Separation Structures. 4-8
Figure 4.4-3 Example Surface Finish Depictions on Concrete Noise and Perimeter Walls and Retaining Walls Without Traffic Railings or Parapets 4-8
Figure 4.4-4 Example Surface Finish Depictions on Retaining Walls with Traffic Railings or Parapets 4-9

5 General Notes and Pay Item Notes 5-1
5.1 General Notes 5-1
5.2 Typical General Notes (Rev. 01/17) 5-2
5.3 Typical Steel General Notes 5-5
5.4 Typical Pay Item Notes 5-7
6 Slope Protection 6-1
6.1 General (Rev. 01/17) 6-1
6.2 Grade Separations 6-2
6.3 Water Crossings 6-2
6.4 Dual Bridges 6-2
7 Plan and Elevation 7-1
7.1 General 7-1
7.2 Plan and Elevation Drawing - General 7-1
7.3 Plan and Elevation Drawing - Plan View 7-3
7.4 Plan and Elevation Drawing - Elevation View 7-4
8 Bridge Hydraulics Recommendation Sheet 8-1
8.1 Purpose 8-1
8.2 General Requirements and Design Procedures 8-1
9 Construction Sequence for Bridge Widening and Phased Construction . . . 9-1
9.1 General 9-1
9.2 Construction Sequence Drawings 9-1
9.3 Construction Sequencing Considerations 9-2
Figure 9.3-1 Typical Dimensions Required for Construction Sequence Drawings 9-4
10 Report of Core Borings 10-1
10.1 General 10-1
10.2 Scales 10-1
10.3 Drawing Content 10-1
10.4 Title Block 10-2
11 Foundation Layout 11-1
11.1 General 11-1
11.2 Foundation Layout Drawing 11-1
11.3 Foundation Layout Design Considerations 11-3
11.4 Pile Data Table 11-3
11.5 Drilled Shaft Data Table 11-5
Figure 11.5-1 Drilled Shaft Data Table 11-6
Figure 11.5-2 Drilled Shaft Data Table Example 11-6

12 Substructure - Bents 12-1
12.1 General 12-1
12.2 Drawings and Details - General 12-1
12.3 Drawings and Details - End Bent 12-3
Figure 12.3-1 End Bent Dowel Bar Detail 12-4
12.4 Drawings and Details - Intermediate Bent. 12-4
12.5 Design Considerations - General 12-4
Figure 12.5-1 Minimum Cap Width for Caps with Double Bearings 1 of 2 . . . 12-6
Figure 12.5-2 Minimum Cap Width for Caps with Double Bearings 2 of 2 . . . 12-6
Figure 12.5-3 Minimum Cap Width When Pile Size Controls 12-7
Figure 12.5-4 Minimum Cap Width When Shaft Size Controls 12-7
Figure 12.5-5 Stepped Pedestal Detail for Squared End Beams on a Skewed Bridge 12-8
12.6 Design Considerations - End Bent 12-8
Figure 12.6-1 End Bent Backwall V-Groove Detail 12-9
Figure 12.6-2 End Bent Cheekwall Detail at MSE Wall 12-10
Figure 12.6-3 Wingwall Calculation Detail 12-11
12.7 Design Considerations - Intermediate Bent 12-11
13 Substructure - Piers 13-1
13.1 General 13-1
13.2 Pier Drawings and Details - General. 13-1
Figure 13.2-1 Hammerhead Pier Rustication 13-2
13.3 Pier Drawings and Details - Plan View 13-2
13.4 Pier Drawings and Details - Elevation. 13-3
13.5 Pier Drawings and Details - Footings 13-3
Figure 13.5-1 Tension Pile Details (1 of 3) 13-4
Figure 13.5-2 Tension Pile Details (2 of 3) 13-4
Figure 13.5-3 Tension Pile Details (3 of 3) 13-5
13.6 Pier Drawings and Details - Reinforcing Details 13-5
Figure 13.6-1 Preferred Column Tie Detail 13-5
Figure 13.6-2 Variable-Width Pier Reinforcing Details 13-6
Figure 13.6-3 Circular Column Cross Section 13-7
13.7 Pier Design Considerations - General. 13-7
Figure 13.7-1 Cap Steel Details. 13-7
Figure 13.7-2 Drilled Shaft Reinforcing Details 13-8
Figure 13.7-3 Pier Cap Reinforcing Details 13-9
Figure 13.7-4 Anchor Rod Details for Composite Neoprene Bearings 13-10
Figure 13.7-5 Anchor Rod Detail for Pot and Disc Bearings 13-11

13.8 Pier Design Considerations - Pier Aesthetics (Rev. 01/17) 13-11
Figure 13.8-1 Pier Cap Cheekwall Details 13-12
Figure 13.8-2 Example Pier Shapes 13-12
Figure 13.8-3 Pier Families 13-13
Figure 13.8-4 Rustication Detail At Working Point Of Rotated Pier Cap 13-14
Figure 13.8-5 Example Pier Shapes for Straight Bridges or Constant Cross Slopes 13-15
13.9 Pier Design Considerations - Hammerhead Piers 13-16
Figure 13.9-1 Pier Cap Details (1 of 4) 13-16
Figure 13.9-2 Pier Cap Details (2 of 4) 13-16
Figure 13.9-3 Pier Cap Details (3 of 4) 13-17
Figure 13.9-4 Pier Cap Details (4 of 4) 13-17
Figure 13.9-5 Staggered Column Alternate 13-18
13.10 Pier Design Considerations - Integral Piers (Rev. 01/17) 13-18
Figure 13.10-1 Integral Concrete Pier Cap Details 13-19
Figure 13.10-2 Integral Steel I-Girder Pier Cap Details 13-20
Figure 13.10-3 Integral Concrete/Steel Pier Cap Details 13-21
13.11 Pier Design Considerations - Straddle Piers (Rev. 01/17) 13-22
Figure 13.11-1 Integral Steel Box Girder Straddle Pier Cap 13-23
Figure 13.11-2 Integral Steel Box Girder Straddle Pier Cap Details 13-24
13.12 Pier Design Considerations - C-Piers 13-24
13.13 Pier Design Considerations - Post-Tensioning 13-25
Figure 13.13-1 PT Duct Layout Using X,Y Coordinates 13-25
14 Finish Grade Elevations 14-1
14.1 General 14-1
14.2 Accuracy 14-1
14.3 Finish Grade Elevations 14-1
14.4 Finish Grade Elevations-Schematic Plan View 14-2
14.5 Finish Grade Elevations - Typical Section View 14-2
15 Superstructure - Concrete Elements 15-1
15.1 General 15-1
15.2 Superstructure Drawings - Framing Plan 15-1
15.3 Superstructure Drawings - Plan 15-2
15.4 Superstructure Drawings - Section 15-3
15.5 Superstructure Drawings - Details (Rev. 01/17) 15-4
Figure 15.5-1 Thickened Deck End Details 15-5
Figure 15.5-2 Thickened Deck End at Interior Support 15-6
Figure 15.5-3 Table of Prestressed I-Beam Temporary Bracing Minimum Requirements and Loads 15-7

Figure 15.5-4 Deck Casting Sequence - Simple Span Prestressed Concrete Beams . . . 15-8
Figure 15.5-5 Deck Casting Sequence - Continuous Beams and Girders . . . 15-9
15.6 Deck Drains. . . . 15-10
15.7 Superstructure Design Considerations - General . . . 15-10
15.8 Superstructure Design Considerations - Prestressed Beams (Rev. 01/17) . 15-10
Figure 15.8-1 Concrete End Diaphragm Details . . . 15-11
Figure 15.8-2 Concrete End Diaphragm Reinforcement Details . . . 15-12
Figure 15.8-3 S.I.P. Form Details for Prestressed Concrete Beams . . . 15-13
Figure 15.8-4 Squared Beam End Details – Exp. Joint at Int. Support . . . 15-14
Figure 15.8-5 Squared Beam End Details - Cont. Deck at Int. Support . . . 15-15
Figure 15.8-6 Squared Beam End Details - Expansion Joint at End Bent. . . . 15-16
Figure 15.8-7 SIP Form Details - Continuous Deck at Int. Support . . . 15-17
15.9 Superstructure Design Considerations - Steel Girders (Rev. 01/17). . . . 15-18
Figure 15.9-1 Edge Beam Detail - Steel Girders . . . 15-18
Figure 15.9-2 Haunch Details - Steel Girders . . . 15-18
Figure 15.9-3 S.I.P. Form Details for Steel I-Girders (Section) . . . 15-19
Figure 15.9-4 S.I.P. Form Details for Steel I-Girders (End Detail). . . . 15-19
Figure 15.9-5 S.I.P. Form Details for Steel Box Girders (Section) . . . 15-20
Figure 15.9-6 S.I.P. Form Details for Steel Box Girders (End Detail) . . . 15-20
16 Structural Steel Girders . . . 16-1
16.1 General . . . 16-1
16.2 Shop Drawings . . . 16-1
16.3 Framing Plan Drawings and Details - Steel I-Girders . . . 16-1
Figure 16.3-1 I-Girder Framing Plan . . . 16-2
Figure 16.3-2 Framing Plan Details - Large Skews . . . 16-2
Figure 16.3-3 Framing Plan at Gore Area . . . 16-3
Figure 16.3-4 Framing Plan at Tapered Ramp . . . 16-4
16.4 Framing Plan Drawings and Details - Steel Box Girders . . . 16-5
Figure 16.4-1 Curved Box Girder Framing Plan . . . 16-6
16.5 Girder Elevation . . . 16-7
Figure 16.5-1 Typical Girder Elevation . . . 16-8
16.6 I-Girder Stiffener Details . . . 16-9
Figure 16.6-1 Weld Termination Detail . . . 16-9
Figure 16.6-2 Tab Plate Detail. . . . 16-10
Figure 16.6-3 Standard Clip Options . . . 16-10
Figure 16.6-4 Details of Bearing/Jacking and Crossframe Connection Stiffeners . . . 16-10
Figure 16.6-5 Details of Intermediate Stiffeners w/o Crossframe Connections 16-11

16.7 Crossframe Details - I-Girders 16-11
Figure 16.7-1 Typical I-Girder Crossframe Details 16-12
Figure 16.7-2 End Crossframe / Diaphragm Connection Details. 16-13
16.8 Crossframe & Diaphragm Details - Box Girders (Rev. 01/17). 16-14
Figure 16.8-1 Steel Box Girder Cross Section Basic Geometry 16-15
Figure 16.8-2 Steel Box Girder Pier Diaphragms 16-15
Figure 16.8-3 Steel Box Girder Internal Crossframe 16-16
Figure 16.8-4 Steel Box Girder Crossframe with Longitudinal Stiffener 16-16
Figure 16.8-5 Steel Box Girder Intermediate Diaphragm Connection 16-17
16.9 Girder Deflection and Camber Diagrams 16-17
Figure 16.9-1 I-Girder Camber Diagram 16-18
Figure 16.9-2 Box Girder DL Deflection Diagram 16-19
16.10 Welds 16-20
16.11 Miscellaneous Details 16-20
Figure 16.11-1 Box Girder Bottom Flange Stiffener Transition and Termination Details 16-22
Figure 16.11-2 Web Splice Detail 16-23
Figure 16.11-3 Top Flange Shear Connector Detail 16-23
Figure 16.11-4 Box Girder Section with Drain Hole Detail. 16-24
Figure 16.11-5 Shop Splice Details 16-24
Figure 16.11-6 Phased Construction Steel Detail at Closure Pour 16-25
Figure 16.11-7 Sole Plate Details 16-25
16.12 Special Details for Uncoated Weathering Steel Bridges 16-26
Figure 16.12-1 Weathering Steel I-Girder Details (1 of 2) 16-27
Figure 16.12-2 Weathering Steel I-Girder Details (2 of 2) 16-28
Figure 16.12-3 Weathering Steel Box Girder Details. 16-29
17 Typical Section 17-1
17.1 General 17-1
17.2 Typical Section - Drawing and Details 17-1
18 ADA Requirements 18-1
18.1 General 18-1
18.2 Ramps and Handrails - Grades Greater than 5% (Rev. 01/17). 18-1
Figure 18.2-1 Maximum Slopes and Landing Spacing and Dimensions for Ramps 18-3
Figure 18.2-2 ADA Handrail Detail 18-3
Figure 18.2-3 Bridge Section At Sidewalk With 42" F-Shape Traffic Railing) . 18-4
18.3 Drainage Grates or Scuppers 18-5
Figure 18.3-1 ADA Surface Requirements 18-5

18.4 Expansion Joints on Bridges 18-5
18.5 Cross Slopes Greater Than 2% (Rev. 01/17) 18-5
Figure 18.5-1 Sections at Sidewalk With Bridge Cross Slope Greater Than 2% 18-6
19 Retaining Walls 19-1
19.1 General 19-1
Figure 19.1-1 Slope Pavement Details at End Bents 19-2
Figure 19.1-2 Spread Footing Abutment Details 19-3
19.2 Wall Control Drawings (Rev. 01/17) 19-3
19.2.1 Wall Control Drawings - Plan Views 19-4
Figure 19.2.1-1 Typical Wall Naming Convention 19-4
19.2.2 Wall Control Drawings - Elevation Views 19-5
19.2.3 Wall Control Drawings - General Notes and Details 19-6
19.3 Cast in Place Cantilever Walls 19-7
19.4 Gravity Walls 19-7
19.5 Permanent Sheet Pile Walls 19-7
19.5.1 Concrete Sheet Pile Walls 19-8
Figure 19.5.1-1 Section Through Sheet Pile Wall Cap 19-8
Figure 19.5.1-2 Anchor Rod Detail 19-9
19.5.2 Permanent Steel Sheet Pile Walls 19-10
19.6 Permanent MSE Walls (Rev. 01/17) 19-11
Figure 19.6-1 Wrap-Around MSE Wall Details 19-13
Figure 19.6-2 Cross Sections at Bridge Approaches 19-14
Figure 19.6-3 Cross Sections at Bridge Approaches with Sidewalks 19-14
Figure 19.6-4 MSE Wall Details 19-14
19.6.1 Future Widenings (Rev. 01/17) 19-15
Figure 19.6.1-1 Single Bridge with Future Widening 19-15
Figure 19.6.1-2 Full Height MSE Wall Details with Allowance for Future Inside Widening 19-16
Figure 19.6.1-3 Partial Height MSE Wall Details with Allowance for Future Inside Widening 19-16
Figure 19.6.1-4 Section Through Roadway Supported by MSE Wall 19-17
19.7 Temporary Walls (Rev. 01/17) 19-17
Figure 19.7-1 Location of Critical Walls with Respect to Traffic Lanes 19-18
19.7.1 Temporary MSE Walls 19-18
19.7.2 Temporary Sheet Pile Walls (Rev. 01/17) 19-19
Figure 19.7.2-1 Alternate Wall Construction Sequence 19-20
19.8 Soldier Pile Walls 19-21

20 Segmental Bridges 20-1
20.1 General 20-1
Figure 20.1-1 Reinforcing Jig for Variable Depth Segment 20-2
20.2 Segment Designation / Segment Layout Sheet 20-3
20.3 Superstructure Drawings - Segment Dimension Sheets 20-4
20.4 Superstructure Drawings - Segment Reinforcing Sheets 20-5
Figure 20.4-1 Reinforcing in Deviation Segment 20-6
20.5 Superstructure Drawings - Transverse Post-tensioning Details 20-6
20.6 Superstructure Drawings - Bulkhead and Shear Key Details 20-7
20.7 Superstructure Drawings - Longitudinal Post-Tensioning Layout 20-7
20.8 Superstructure Drawings - Post-Tensioning Details (Rev. 01/17) 20-8
Figure 20.8-1 Stressing End Anchorage Clearance of Bottom Internal Tendon Near Deviator 20-9
Figure 20.8-2 Stressing End Anchorage Clearance of External Tendon at Diaphragm Near Anchor Block 20-10
Figure 20.8-3 Non-Stressing End Anchorage Clearance at End Diaphragm Near Abutment Backwall 20-11
Figure 20.8-4 Non-Stressing End Anchorage Clearance at End Diaphragm Near Other Structure 20-12
Figure 20.8-5 Detail at Pier Segment with Tendon Anchorage 20-13
Figure 20.8-6 Detail at Expansion Joint Segment with Tendon Anchorage . . 20-13
Figure 20.8-7 Detail at Blister without Anchorage 20-14
Figure 20.8-8 Detail at Pier Segment with Tendon Saddle 20-14
Figure 20.8-9 Detail at Deviator 20-15
Figure 20.8-10 Diabolo Details 20-16
20.9 Superstructure Drawings - Erection Scheme and Construction Notes 20-17
20.9.1 Balanced Cantilever 20-17
Figure 20.9.1-1 Means of Stabilizing Cantilever 20-18
Figure 20.9.1-2 Stabilization of Balanced Cantilever 20-18
Figure 20.9.1-3 Setting Geometry with Strongbacks 20-19
Figure 20.9.1-4 Gantry and Stabilization Towers 20-21
Figure 20.9.1-5 Gantry with Leg on Pier Segment 20-21
Figure 20.9.1-6 Gantry Loads During Launching 20-22
Figure 20.9.1-7 Beam and Winch Details 20-23
20.9.2 Span by Span Erection 20-24
Figure 20.9.2-1 Span by Span Construction 20-25
Figure 20.9.2-2 Underslung Truss Details 20-27
Figure 20.9.2-3 Span by Span Top-Down Erection Details 20-28
Figure 20.9.2-4 Project Specific Truck and Axle Weight for Segment Transport 20-29
Figure 20.9.2-5 Truck Loaded with Segment 20-29

21 Movable Bridges 21-1
21.1 Bascule Leaf Notes 21-1
21.1.1 General 21-1
21.1.2 Bascule Leaf Notes 21-1
21.2 Bascule Steel Girders 21-6
21.2.1 General 21-6
21.2.2 Framing Plan Drawings 21-7
Figure 21.2.2-1 Framing Plan 21-8
21.2.3 Longitudinal Section Drawings 21-8
Figure 21.2.3-1 Longitudinal Section 21-9
21.2.4 Transverse Section Drawings 21-9
Figure 21.2.4-1 Transverse Section Drawings 21-10
21.2.5 Main Girder Elevation Drawings 21-10
Figure 21.2.5-1 Main Girder Partial Elevation Drawing 21-12
21.3 Rack Assembly And Details 21-13
21.3.1 General 21-13
21.3.2 Rack Details 21-13
Figure 21.3.2-1 Rack Details 21-14
21.3.3 Rack Assembly 21-14
Figure 21.3.3-1 Rack Assembly 21-15
21.3.4 Rack Assembly Design Considerations 21-16
21.4 Rack Pinion, Bearing Supports and Bearing Details 21-16
21.4.1 General 21-16
21.4.2 Rack Pinion Details 21-16
Figure 21.4.2-1 Pinion Details 21-17
21.4.3 Pinion Bearing Details 21-17
Figure 21.4.3-1 Pinion Bearing 21-18
21.4.4 Pinion Bearing Support Details 21-19
21.4.5 Rack Pinion Assembly Design Considerations 21-19
21.5 Trunnion Assembly, Bearing Supports and Details 21-19
21.5.1 General 21-19
21.5.2 Trunnion Assembly Details 21-20
Figure 21.5.2-1 Trunnion Assembly 21-20
21.5.3 Trunnion Bearing Details 21-21
21.5.4 Trunnion Bearing Support Details 21-21
21.5.5 Trunnion Assembly Design Considerations 21-22
21.6 Machinery Layout and Elevation 21-22
21.6.1 General 21-22
21.6.2 Machinery Layout and Elevation Details 21-23
Figure 21.6.2-1 Machinery Partial Elevation 21-23

21.7 Submarine Cable 21-24
21.7.1 Submarine Cable Detail Drawings. 21-24
Figure 21.7.1-1 Typical Submarine Cable Terminal Cabinet. 21-24
Figure 21.7.1-2 Submarine Cable Support Details 21-25
Figure 21.7.1-3 Submarine Cable Trench 21-25
21.8 Centering Devices. 21-25
21.8.1 Centering Device Detail Drawings. 21-25
Figure 21.8.1-1 Centering Device Details 21-26
21.9 Counterweight Adjustment Blocks 21-27
21.9.1 Counterweight Adjustment Blocks Detail Drawings. 21-27
Figure 21.9.1-1 Concrete Counterweight Adjustment Block Details 21-27
Figure 21.9.1-2 Cast Iron Counterweight Adjustment Block Details 21-27
Figure 21.9.1-3 Counterweight Block Handle Details 21-28
21.10 Live Load Shoes 21-28
21.10.1 Live Load Shoe Detail Drawings 21-28
Figure 21.10.1-1 Live Load Shoe Details 21-29
21.11 Span Locks 21-30
21.11.1 Span Lock Detail Drawings 21-30
Figure 21.11.1-1 Span Lock Plan and Section 21-31
Figure 21.11.1-2 Span Lock Details 21-32
21.12 Bascule Leaf Railings 21-33
21.12.1 Bascule Leaf Railing Detail Drawings 21-33
Figure 21.12.1-1 Pedestrian Railing Section 21-33
Figure 21.12.1-2 Traffic Railing Sections. 21-34
Figure 21.12.1-3 Railing Field Splice Details. 21-35
21.13 Bascule Leaf Deck Joints 21-36
21.13.1 Bascule Leaf Deck Joint Detail Drawings 21-36
Figure 21.13.1-1 Bascule Leaf Rear Joint 21-36
Figure 21.13.1-2 Bascule Leaf Forward Joint and Longitudinal Joint 21-37
21.14 Bascule Bridge Plan Submittal Requirements 21-38
21.14.1 List of Required Drawings 21-38
21.14.2 Progress Submittals Schedule and Content 21-42
22 Drainage. 22-1
22.1 General 22-1
22.2 Deck Drains (Rev. 01/17) 22-1
Figure 22.2-1 Large Deck Drain Detail 22-2
Figure 22.2-2 Scupper Details. 22-3
Figure 22.2-3 Downspout Details 22-4
Figure 22.2-4 Large Deck Drain Detail 22-4

22.3 Drain Conveyance (Rev. 01/17) 22-5
Figure 22.3-1 Pier Drainage Details 22-6
22.3.1 Drain Conveyance - Optional Materials (Rev. 01/17) 22-6
Figure 22.3.1-1 Optional Materials Details 22-8
22.4 Drainage within and Adjacent to Retaining Walls 22-8
23 Spliced Girder Bridges 23-1
23.1 General 23-1
23.2 Applications 23-1
23.3 General Considerations 23-2
23.4 Girder Segment Sheets 23-2
23.5 Duct Profile Sheet(s) (if used) 23-4
23.6 Camber Diagram (Deflection and Build-Up) 23-4
23.7 Miscellaneous Details (Rev. 01/17) 23-4
Figure 23.7-1 Post-Tensioned Spliced Girder Details (1 of 4) 23-5
Figure 23.7-2 Post-Tensioned Spliced Girder Details (2 of 4) 23-6
Figure 23.7-3 Post-Tensioned Spliced Girder Details (3 of 4) 23-7
Figure 23.7-4 Post-Tensioned Spliced Girder Details (4 of 4) 23-8
23.8 Construction Sequence 23-9
24 Fender Systems 24-1
24.1 General 24-1
24.2 General Notes 24-1
24.3 Schematic Plan View Sheet 24-3
Figure 24.3-1 Schematic of Fender System Showing Treatment of Single or Dual Fixed Bridge with Non-Skewed Channel 24-4
Figure 24.3-2 Schematic of Fender System Showing Treatment of Single or Dual Fixed Bridge with Skewed Channel 24-5
24.4 Partial Schematic Plan View Sheet 24-5
Figure 24.4-1 Partial Schematic Plan View of Fender System Flared Section 24-6
24.5 Fender System Detail Sheets 24-6
24.6 Clearance Gauge Detail Sheet(s) 24-7
24.7 Report of Core Borings Sheet(s) 24-7
25 Prefabricated Bridge Elements and Systems (PBES) 25-1
25.1 Design Considerations - General 25-1
25.2 PBES Applicability 25-2
25.3 PBES Connections 25-2
Figure 25.3-1 Tolerance Measurement 25-3
Figure 25.3-2 Alignment Orientation 25-3
25.3.1 PBES Joint Selection 25-6
Figure 25.3.1-1 Grout Bedding Process 25-7
Table 25.3.1-1 Joint Type 25-8

25.3.2 Grouted Reinforcing Sleeve Couplers 25-9
25.3.3 Reinforcing Bar Connections 25-9
Figure 25.3.3-1 Precast Slab Beam Connection 25-10
Figure 25.3.3-2 Precast Unit Connection 25-10
Figure 25.3.3-3 Splice Overlap Closure Pour 25-11
Figure 25.3.3-4 Headed Bars and Hooks Closure Pour 25-12
25.4 PBES Components 25-13
25.4.1 Sizing 25-13
25.4.2 Handling 25-14
25.4.3 PBES Component Examples 25-15
25.4.3.1 Precast Pier 25-15
Figure 25.4.3.1-1 Precast Pier Assembly 25-16
Figure 25.4.3.1-2 Precast Pier 25-17
25.4.3.2 Precast Column 25-18
Figure 25.4.3.2-1 Precast Column Details 25-18
Figure 25.4.3.2-2 Fabrication of H-Section Pier Column 25-19
Figure 25.4.3.2-3 C.I.P. Foundation and Precast H-Section Pier Column 25-19
Figure 25.4.3.2-4 Mechanical Coupler at Match-Cast Joint 25-20
25.4.3.3 Precast Pier Cap 25-20
Figure 25.4.3.3-1 Precast Pier Cap Installation 25-21
Figure 25.4.3.3-2 Precast Pier Cap Details 25-22
Figure 25.4.3.3-3 Precast Pier Details 25-23
25.4.3.4 Precast Connection to Drilled Shaft 25-24
Figure 25.4.3.4-1 Drilled Shaft Detail 25-24
Figure 25.4.3.4-2 Shaft-Column Connection 25-25
25.4.3.5 Hammerhead Pier Construction (Rev. 01/17) 25-25
Figure 25.4.3.5-1 Hammerhead Pier Traffic Phasing Concept 25-27
Figure 25.4.3.5-2 Hammerhead Wing Closure Pour 25-28
Figure 25.4.3.5-3 Hammerhead Pseudo Match-Cast Epoxy Joint 25-29
25.4.3.6 Precast Footing 25-29
Figure 25.4.3.6-1 Precast Footing 25-30
Figure 25.4.3.6-2 Precast Footing Delivery 25-31
Figure 25.4.3.6-3 Precast Footing Installation 25-31
25.4.3.7 Precast Footing Details 25-32
Figure 25.4.3.7-1 Precast Footing Details 25-33
25.4.3.8 Precast Pile Cap 25-33
Figure 25.4.3.8-1 Pile Cap Details 25-35
Figure 25.4.3.8-2 Pile Cap Erection Process 25-36
25.4.3.9 Bent Cap 25-37

Figure 25.4.3.9-1 Bent Cap Details 25-38
25.4.3.10 Slab Beam (Rev. 01/17) 25-39
Figure 25.4.3.10-1 Precast Slab Beam (1 of 2) 25-40
Figure 25.4.3.10-2 Precast Slab Beam (2 of 2) 25-41
25.5 PBES Construction Specifications 25-41
Volume 2 - Revision History R2-1

INTRODUCTION

I.1 GENERAL

A. The ***FDOT Structures Detailing Manual*** (***SDM***) is Volume 2 of the ***Structures Manual***. See the ***Structures Manual Introduction*** for additional information including authority, scope, distribution and process for modifications to the ***Structures Manual***.

B. This volume of the Structures Manual provides guidance for drafting and detailing criteria and methods for use in preparing Florida Department of Transportation (FDOT) contract plans for structural elements or systems. These elements or systems include bridges, overhead sign structures, earth retaining structures and other miscellaneous highway structures. The ***SDM*** includes preferred details and examples of general component plan sheets. The information required to be shown on each type of sheet includes but is not limited to the items listed for the sheet in the ***SDM*** chapters.

C. Additional information on overhead sign structures, high-mast light poles, and miscellaneous roadway appurtenances as well as general administrative, geometric, shop drawing, and plans processing may be found in the ***Plans Preparation Manual (PPM)*** Topic Nos. 625-000-007 and 625-000-008.

D. As a supplement to the ***SDM***, a series of examples which represent some of the many situations a designer may encounter when designing a bridge has been compiled. These ***Structures Detailing Manual Examples*** are provided to convey detailing and organizational requirements and not to present actual design examples. In the event that any detail and/or design information shown in these examples does not meet the requirements set forth in the ***Structures Manual***, the ***Structures Manual*** requirements shall prevail.

I.2 FORMAT (Rev. 01/17)

A. The ***SDM*** is presented in both 8 1/2-inch x 11-inch and 11-inch x 17-inch formats consisting of text, figures, charts, graphs and example drawings. This Manual provides standard engineering criteria and guidelines to be used in the development of engineering drawings of structures for which the Structures Design Office (SDO) has responsibility.

B. The ***SDM*** is intended to be used in conjunction with the ***Structures Design Guidelines (SDG)***, ***Design Standards***, ***Plans Preparation Manual (PPM)*** (Topic Nos. 625-000-007 and 625-000-008), and the ***CADD Manual***.

C. The ***SDM*** is written primarily in the active voice to Structural Designers, Professional Engineers, Engineers of Record, Structural Engineers, and Geotechnical Engineers engaged in work for the Florida Department of Transportation.

D. Refer to the ***CADD Manual***, Section 4.13.8, for FDOT Drafting Standards related to file naming convention, level names, line weights, line styles and color, text fonts, size, weight and color and dimension styles for Structures QC electronic plan submittal requirements.

I.3 COORDINATION

See ***Structures Manual Introduction*** I.7.

I.4 QUANTITY CALCULATIONS (Rev. 01/17)

A. The ***Basis of Estimates Manual*** describes the method of measurement, basis of payment and required rounding accuracy for frequently used items. Calculate quantities to one additional decimal place of precision compared to TRNS*PORT input.

B. Calculate quantities by construction phase for each individual component e.g. end bents, deck, traffic and pedestrian railings, expansion joints, bearings, reinforcing steel, riprap, slope pavement, etc. For multiple adjacent bridges, whether built in phases or at the same time, include quantities and quantity breakdowns with the individual bridge they are associated with. For adjacent bridges with continuous slope treatments or other similar features, e.g. median separated bridges, clearly indicate the quantity breakdowns for each bridge in the plans.For pay items with a sub-unit measurement, calculate the sub-units, and include the quantity in the plans only if required by the ***Basis of Estimates Manual***.

C. See Section 4.13.8 of the ***CADD Manual*** for directory location and file format for quantity calculations by hand and for computer input and output.

D. Input estimated bridge quantities (for each bridge) into the Department's computerized cost estimating system (TRNS*PORT) and check the printout.

Modification for Non-Conventional Projects:
Delete ***SDM*** I.4.

I.5 SUMMARY OF STRUCTURES QUANTITIES BOXES

A. Complete and include in the Structures component plan set a "Summary of Structures Quantities" box for each bridge. Include pay item numbers, descriptions, units, and quantities. Pay items and quantities should be entered in the quantities box under the appropriate bridge category, i.e. superstructure, substructure, foundation, etc. Under each bridge category enter each component, e.g. End Bent 1, Intermediate Bent 2. Under each component add a row for each pay item, add additional lines if necessary to break down quantities by construction phase.

B. The Design Comments Column may be used to clarify quantities, or add extra quantity details; e.g. includes 14.2 cy for pedestals.

C. Only include calculated quantities in the "Summary of Structures Quantities". Do not show separate estimated quantities elsewhere in the plan set.

D. For more information on summary of quantities requirements in the plans see the ***Basis of Estimates Manual***, Chapter 8.

E. Review the final Contract Documents to ensure that a clear method of payment is conveyed for all items of work on the project either by the appropriate pay item or in the pay item notes.

Modification for Non-Conventional Projects:
Delete ***SDM*** I.5.

I.6 PHASE SUBMITTAL REQUIREMENTS

During the design process, submittals will be made at various stages of project development. The purpose of these phase submittals is to ensure the design meets the Department's intent for a given project and that the work done matches the scope agreed upon at the initiation of the contract. For a summary of phase submittals, see ***PPM***, Volume 1, Chapter 26.

Modification for Non-Conventional Projects:
Delete ***SDM*** I.6 and see the RFP for requirements.

1 DRAFTING AND PRINTING REQUIREMENTS

1.1 GENERAL

This chapter contains references to general detailing standards and requirements for various bridge components. The instructions are also applicable to most other highway related structures such as retaining walls, pile-supported roadways, etc. Refer to the ***CADD Manual*** for specific instructions related to computer aided drafting.

1.2 DRAFTING REQUIREMENTS

A. Draw all elements at full scale (1:1) to ensure that the plans accurately depict the intended design. A minimum standard of care shall be employed to maintain the accuracy of dimensions shown in relationship to the plans and details as they are drawn to avoid potential design errors and construction conflicts. Exaggerated vertical scales may be used where required for clarity, e.g. Plan and Elevation sheets, Wall Control Drawing Elevation Views, etc.

B. Differentiate outline and dimension line weights.

C. Ensure that the relative line weight and the chosen lettering provides uncompromised legibility when reproduced by normal printing procedures.

D. See the ***Plans Preparation Manual*** (***PPM***) and the ***CADD Manual*** for additional drafting requirements.

1.3 QUALITY ASSURANCE

Chapter 18 of the ***PPM***, Volume 1, explains the processes for Quality Assurance and Quality Control. Chapter 20, ***PPM*** Volume 1, discusses acceptable printing methods, paper size, and quality of the media and print. From time to time, the Department may conduct an audit of a firm's Quality Assurance/Quality Control (QA/QC) process to ensure the QA/QC plan outlined at the beginning of the project is being followed. All QA/QC documentation, including check prints, design calculations, quantity computations, etc., shall be kept on file until construction of the project is complete at a minimum.

Modification for Non-Conventional Projects:
Delete ***SDM*** 1.3 and insert the following: See the RFP for Quality Management Plan (QMP) requirements which describes the Quality Control (QC) procedures to be utilized to verify, independently check, and review all design drawings, specifications, and other documentation prepared as a part of the contract. In addition the QMP shall establish a Quality Assurance (QA) program to confirm that the Quality Control procedures are followed. From time to time, the Department may conduct an audit of a firm's QMP process to ensure the submitted plan for the project is being followed. All QA/QC documentation, including check prints, design calculations, etc., shall be kept on file until construction of the project is complete at a minimum.

1.4 DRAWING REVISIONS

A. When changes are required prior to contract award, follow the procedures outlined in Chapter 20 of the ***PPM***, Volume 1.

B. When changes are required after the contract award, follow the procedures outlined in Chapter 5.12 of the ***Construction Project Administration Manual***.

Modification for Non-Conventional Projects:
Delete ***SDM*** 1.4.A and 1.4.B and insert the following: When changes are required after the plans are released for construction, follow the procedures outlined in Chapter 5.12 of the ***Construction Project Administration Manual***. All affected plan sheets shall be resubmitted to the Department for review, and after they have been reviewed and approved, they shall be re-stamped "Released for Construction".

2 DETAILING INSTRUCTIONS

2.1 DETAILING AIDS

The following detailing aids can assist the detailer in efficiently creating a set of plans.

A. When using FDOT programs (Reinforcing Bar Lists, etc.), use the forms and user's manuals provided by the Structures Design Office and/or the Engineering CADD Systems Office as listed on the following web sites: http://www.fdot.gov/structures; http://www.fdot.gov/cadd/

B. Plan the drawings by determining which details and information need to be placed on each sheet, the scale to be used, the number of sheets required and the sequence of the sheets.

C. The Structures Cell Library contains many commonly used cells in the development of structures plans and is located in the Structures Bar Menu. The Structures Bar Menu is available through the Engineering CADD Systems Office (ECSO). Maintenance releases for the Bar Menu are available on the ECSO website. Structures cells are posted on the FDOT Structures website. To receive notifications of changes to the Structures Cell Library and other important updates, sign up for the FDOT Contact Mailer list.

2.2 STRUCTURES IDENTIFICATION NUMBERS

A. FDOT assigns identification numbers to bridges, overhead signs, high-mast light poles and traffic signal mast arms. Structures supporting Intelligent Transportation System (ITS) equipment may be similar to overhead signs or high-mast light poles, these structures are also assigned identification numbers.

B. Contact the District Structures Maintenance Engineer early in the design process to obtain structure identification numbers.

Modification for Non-Conventional Projects:
Delete ***SDM*** 2.2.B and insert the following: B. Request bridge and miscellaneous structure numbers from the District Structures Maintenance Office before the 90% plans submittal.

C. New numbers will be assigned to all new and replacement bridges. Widened bridges generally retain their existing numbers. If the widening joins existing structures, the District Structures Maintenance Engineer will decide which bridge number to retain.

D. Show the bridge number on the lower right side above the Title Block of all sheets. For ancillary structures (overhead signs, high mast light poles and traffic signal mast arms) the structure identification number shall be shown on the appropriate plan sheet, including data table sheets, above the title block.

E. Place the bridge number of any bridge that shows up in the plan view, including existing bridges to be removed, on the actual bridge. Only the subject bridge number shall appear in the lower right corner of the sheet.

2.3 BRIDGE LENGTHS AND HORIZONTAL CONTROL

A. A bridge's length is the distance measured along the Station Line between begin and end of bridge (front faces of end bent backwall or end of adjoining approach slabs for end bents with no back wall.)

B. Horizontal Control Lines

1. Alignment Line: Show the alignment control line that applies within the limits of the bridge.
2. Station Line: This is the horizontal control line from which basic distances, lines and angles are referenced for locating bridge components in the field. This line is usually the same line as the Alignment Line. Use the centerline of construction (℄), Base Line Survey, Profile Grade Line or Baseline (℄) to show the stations along the project. Refer to this as the "Station Line."

2.4 FINANCIAL PROJECT NUMBER AND FEDERAL-AID PROJECT NUMBER

A. Show the Financial Project Identification Numbers (FPID) in the Title Block on all bridge plans. Place the FPID Number on the existing bridge plans if included in the submittal.

B. Do not show Federal-Aid Project Numbers (F.A.P. No.) on the bridge plans. Federal-Aid Project Numbers shall be shown on the Key Sheet only.

2.5 INITIAL BLOCK

Include the initials or name of the person performing each function and the date completed for each sheet. If a function is not applicable, place a dash through the name and date block.

2.6 TITLE BLOCK

In upper case letters, include the following information in the title block, of each plan sheet:

A. Sheet title

B. Project Name (a project description and bridge location)

C. Sheet Number

D. Initials (Detailers', Designers' and Checker’s)

E. EOR information (Name and address of Consulting Firm or FDOT Office, Engineer of Record's name and PE License number, and consultant Certificate of Authorization number if applicable)

F. Financial Project ID Number

G. County (or counties, if project covers more than one county)

H. Road number (Show the State or County road number including "SR" or "CR" as appropriate; leave blank if there is no road number)

I. When applicable, descriptions of revisions using the format and process described in ***PPM*** Volume 1, Chapter 20.

Modification for Non-Conventional Projects:
Add ***SDM*** 2.6.J as follows: J. Design Build Firm Name

2.7 ORTHOGRAPHIC PROJECTION

A. Use orthographic projection (a multi view system using as many dimensioned views as necessary) to show an object's features. In general, detail objects using more than one view.

B. Use perspective and isometric views to clarify complicated details.

2.8 VIEWS, SECTIONS, DETAILS AND NOTES

A. Before starting a drawing, study the bridge or component and determine the views, sections, details and notes required to describe it fully and to the best advantage. Plan the layout and detail accordingly, allowing sufficient space for dimensions.

B. All details throughout the bridge plans shall be oriented consistently. Show layouts with stationing increasing from left to right. Detail End Bent 1 looking back station; detail all other substructure elements looking ahead station. Detail superstructure sections looking ahead station.

C. Cross-reference all views, sections, details or notes on a drawing.

D. Use a planned system to arrange details on a sheet. Do not randomly place views and sections on the drawing. Avoid crowding elements on a sheet. In general, it is preferred to lay out a sheet with the plan view in the upper left, elevation aligned with plan view in lower left, side/section views on upper right and notes on lower right.

E. A section cut line is an imaginary line extending between right angles at the location of the section. Use section arrows to indicate the direction of the section view.

F. Place the identification letters of the section on the interior side of the cut line. For sections located on another sheet, provide cross-reference notes on both sheets.

G. When an enlarged detail of a certain area in a view is required, place a circle or an ellipse large enough to encompass the area that is to be shown in the enlarged detail. Annotate the circle/ellipse with a leader line and a label such as: See Detail "A",

Sheet _. Entitle the enlarged detail: DETAIL "A". If the Detail is located on another sheet, provide cross-reference notes on both sheets.

H. Do not use the letters “I”, “O”, or “Q” in designations for views, sections or details.

2.9 SCALES

Select a scale large enough to clearly show required details when printed to 11-inch x 17-inch size with a minimum of 5/8-inch left and right margins. Do not indicate scale on the drawings. Set the annotation scale and active scale through the Bar Menu and save settings to ensure consistency. The following scales are recommended:

A. Plan and Elevation: Depending on the size of the bridge and/or how congested the sheet will be, use 1"= 10' through 1"= 50'.

B. Foundation Layout: 1"= 10' or to fit the sheet (longitudinal and lateral scales may be different and piling may be exaggerated in size for clarity).

C. Substructures
   1. Plan and Elevation views 3/8"= 1'-0"
   2. Sections and Details 3/4"= 1'-0" or larger

D. Superstructure
   1. Plan View 1/4"= 1'-0"
   2. Cross Sections 3/8"= 1'-0"
   3. Details 3/4"= 1'-0" or larger.

2.10 STRENGTH AND CONTRAST OF LINES

A. Contrast between various line weights shall be in the width of the line and not in the intensity. The exception is topo file and other reference files which shall be screened back to reduce intensity. Verify that all lines are legible on prints.

B. Vary the line weight to accentuate important features. Use consistent line weights for similar purposes. (See the ***CADD Manual***.)

C. When showing existing and proposed construction in the same view, show existing elements using dashed/dotted lines per the ***CADD Manual.***

2.11 DIMENSIONING

2.11.1 General

A. A dimension is a linear measurement used to describe an object's size.

B. A value is a quantity used to express a magnitude. An integer used to quantify a number of items such as bars, spacing, bolts, holes, etc. (e.g., 10 spaces @ 4", 10 ~ 4A1). See Figure 2.11.1-1.

Figure 2.11.1-1 Stirrup Bar Detail

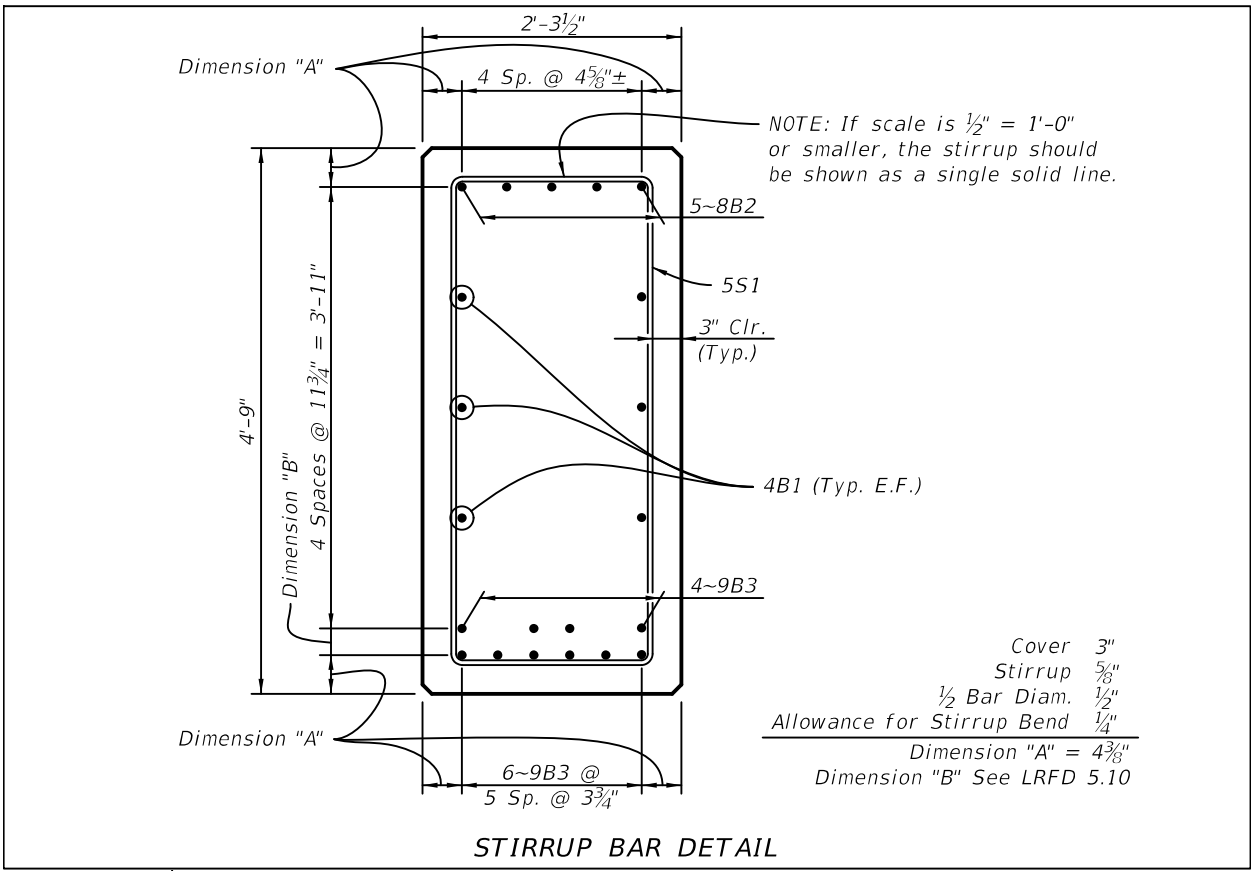

C. A unit is a precise quantity in terms of a reference for measurement.

D. Linear dimension: Use a value in conjunction with a unit of measurement (e.g., 5'-6¼").

E. Elevation: The unit for elevations is feet (ft). Do not show the unit as it is understood. Show most elevations to three decimal places (e.g., 25.384). Use an elevation leader line as shown in Figure 2.11.1-2 Elevation Callouts, do not use dimension or note style leader lines. See also Section 2.11.3 for details.

Figure 2.11.1-2 Elevation Callouts

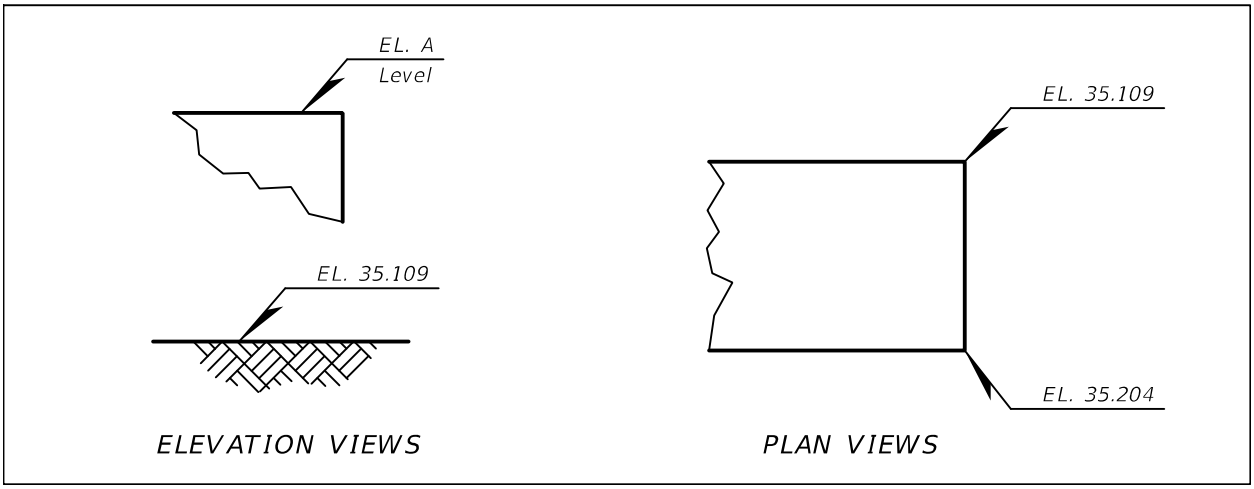

F. Angle: Show angles to needed accuracy up to the nearest second.

G. Sizes of Structural Steel and Aluminum members: When showing size, show all applicable units. Use industry standards such as ASTM or show the manufacturer's size when applicable. Examples of how to designate structural steel and aluminum members are as follows:

1. For solid shapes such as plates and bars - Thickness" x Width" x Length"
2. For W-Shapes - W 30 x 90
3. For Channels - C 10 x 15.3
4. For Angles - L 4 x 4 x ¼
5. For Structural Tees - WT 16.5 x 59

2.11.2 Dimensions and Text

A. Dimensions are displayed by associating Values and Units. Show dimensions clearly, accurately and tied to a control line. Not all dimensions shown on a drawing are for construction purposes; many are engineering dimensions given for convenient reference and checking.

B. Compressed dimensions, due to limited space, may be shown without sacrificing legibility. See Figure 2.11.2-1 for examples.

Figure 2.11.2-1 Compressed Dimensions

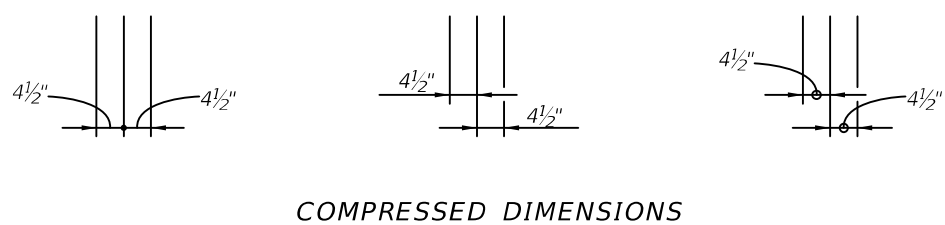

C. Dimension lines should be spaced about 3/4-inch from the object when plotted.

D. Parallel dimension lines should be spaced 3/8-inch minimum when plotted.

E. Dimensions should be kept outside the views (between Extension Lines), but occasionally may be placed inside views or at the end of a leader line.

F. Show dimensions in units of feet and inches. Show dimensions of 12-inches or more in feet, inches and fractions of an inch, and when the inch dimension is less than a full inch include the zero placeholder, e.g. 4'-0½". Show dimensions greater than 1-inch but less than 12-inches in inches and fractions of an inch. Show dimensions less than one inch in fractions of an inch without a leading zero, e.g. ¾". Some exceptions to this rule are component or member designations (i.e., 24" Square Piling, Existing 36" Steel Beam, etc.) and elevations.

G. Dimensions are to be read from the following directions (see Figure 2.11.2-2):

1. Place numerals on horizontal dimension lines so that they can be read from the bottom of the drawing.
2. Place numerals on vertical dimension lines so that they can be read from the right side of the drawing.
3. Place numerals on inclined dimension lines so that they can be read horizontally by rotating the sheet through the smallest possible angle.

Figure 2.11.2-2
Text Orientation

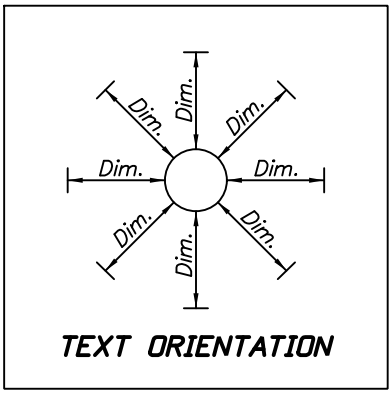

H. Show all dimension numerals parallel to the dimension line.

I. When dimension numerals occupy more space than provided by the dimension line, show on extension lines or by leader lines to the dimension line.

J. Ensure the sum of string dimensions equals the total overall dimension. If this presents a mathematical impossibility without violating the accuracy standards in Section 2.11.3 of this Chapter, use the (+) or (-) signs to indicate heavy or light dimensions. When dimensioning a series of spaces, show incremental dimensions. Avoid the use of "Equal Spaces".

K. When it is necessary to include a dimension between certain points in a detail, small filled circles may be used to emphasize the extremities of the line being measured.

L. Terminate dimension lines with arrowheads. Arrowheads should be a uniform size.

M. Double arrowheads on a dimension line are used on partial views, in congested areas, or when it is not necessary to show the dimension line to its termination. Note dimension numerals on the line along with a description of the magnitude or boundaries in parenthesis. Double arrowheads should not be terminated at extension lines. See Figure 2.11.2-3.

Figure 2.11.2-3 Dimensions

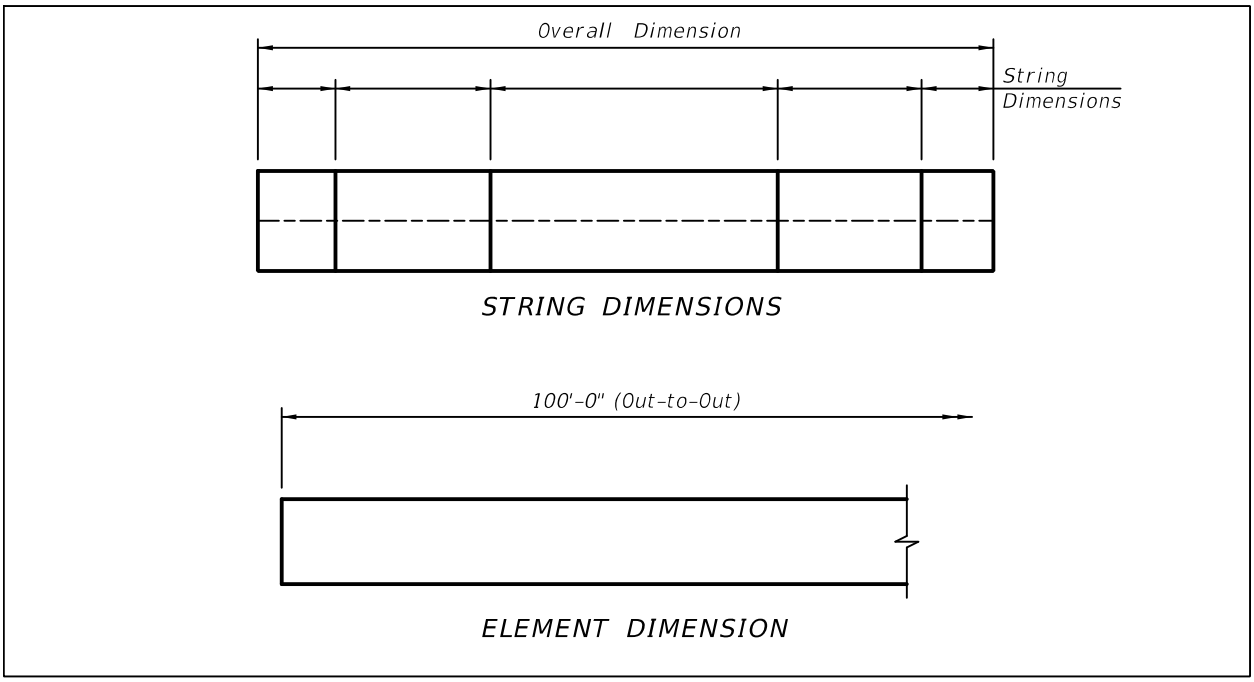

N. Mark centerlines with the centerline symbol. Do not use a centerline as a dimension line, though it may serve as an extension line.

O. Show leader lines with straight lines or continuous curves. Leader lines may cross extension and object lines but may not cross dimension lines.

P. Extend extension lines beyond the point of the arrowhead and leave a gap from the object.

Q. Label radii, surface finishes, and angles as required. Show angles and bearings without hyphens. See Figure 2.11.2-4 and Figure 2.11.2-5.

Figure 2.11.2-4 Angles

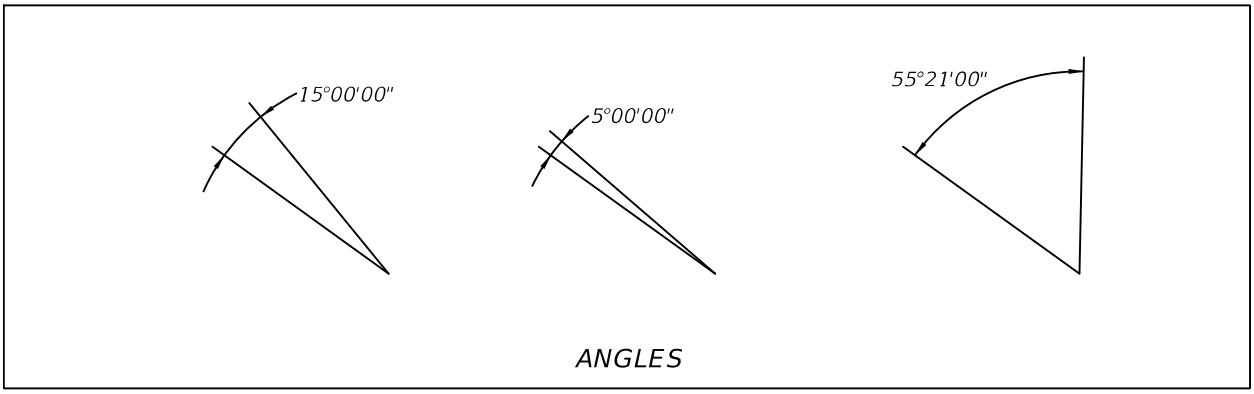

Figure 2.11.2-5 Radii

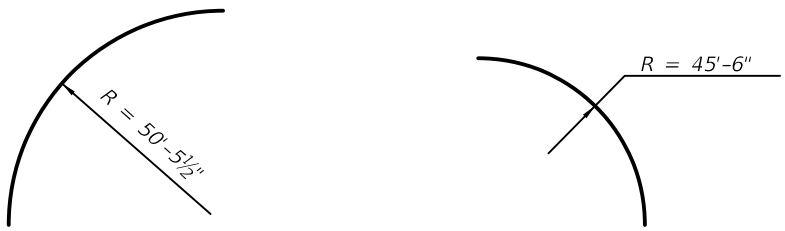

RADII

R. For non-level surfaces with extremities not specifically defined by vertical dimensions, note to slope "down" a specific vertical dimension over a defined horizontal length or at a uniform rate.

S. For non-plumb surfaces with extremities not specifically defined by horizontal and vertical dimensions, note to bevel at a uniform rate with the bevel symbol. See Figure 2.11.2-6. For the batter of non-plumb piling, note to batter with the bevel symbol or the amount of batter noted and connected to piling by leader lines with the direction of pile batter clearly shown on the drawings.

Figure 2.11.2-6 Bevel Symbol Detail

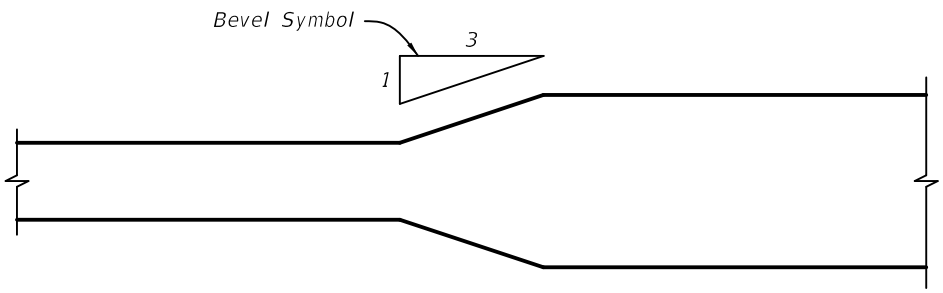

BEVEL SYMBOL DETAIL

T. When dimensions are shown by methods other than described above, the unit shall be provided. In this event, dimensions are defined as text (i.e., titles, sub-titles, headings, labels, notes, and free standing texts). For free standing texts, the unit may be spelled out to add clarity. If the dimensional text used to describe the size of an object is placed at the end of a leader line pointing directly to the object, show the units.

2.11.3 Dimensioning Precision

A. Show dimensions in feet, inches and fraction of an inch and elevations in decimal of a foot.

B. Dimension concrete to the nearest 1/8-inch.

C. Dimension structural steel to the nearest 1/16-inch.

D. Dimension partial lengths of reinforcing steel to nearest 1/4-inch; dimension overall lengths to the nearest inch.

E. Show stations and offsets to the nearest 0.01 foot.

F. Show layout dimensions (dimensions along tangents, etc.) to the nearest 1/16-inch.

G. Show foundation layout dimensions to the nearest 1/8-inch or 0.01 foot stationing.

H. Show dead load camber and dead load and live load deflections to the nearest 1/16-inch.

I. Show elevations to the nearest 0.001 foot, except pile cut off elevations to the nearest 0.1-foot and water elevations and groundline elevations to nearest 0.01 foot.

J. Show skew angles and bearings to the nearest second.
Example: 69° 38' 32", N 69° 38' 32" E

K. Show other angles given such that dependent dimensions meet the above criteria to the nearest second.

L. Show spacing of reinforcing steel to the nearest 1/4-inch.

M. Show manufactured items to industry standards.

2.12 SYMBOLS AND PATTERNS (Rev. 01/17)

A. To simplify the construction and clarity of details, patterns may be used to represent certain materials.

B. Use only enough material indication to clarify details.

C. Verify legibility when the drawings are reproduced to 11-inch x 17-inch print size.

D. Common symbols and patterns are included in the FDOT Structures Cell Library.

E. Use the symbologies (layers, linestyles, and line weights) appropriate to each element of the drawing, based on the levels provided in the Structures CADD seed file provided by the ECSO with the FDOT CADD software, and the requirements of the ***CADD Manual***, Section 4.13.8.

2.13 ARCHITECTURAL TREATMENT

A. Do not use architectural treatments such as shades and shadows on bridge drawings.

B. Keep required pictorial views with shades and shadows separate from the bridge details.

2.14 SKEW ANGLE AND COMPLEMENTARY SKEW ANGLE

A. A skew angle is the acute angle measured between a line perpendicular to the longitudinal line and the skew line itself. See Figure 2.14-1.

Figure 2.14-1 Skew Angle and Complementary Angle

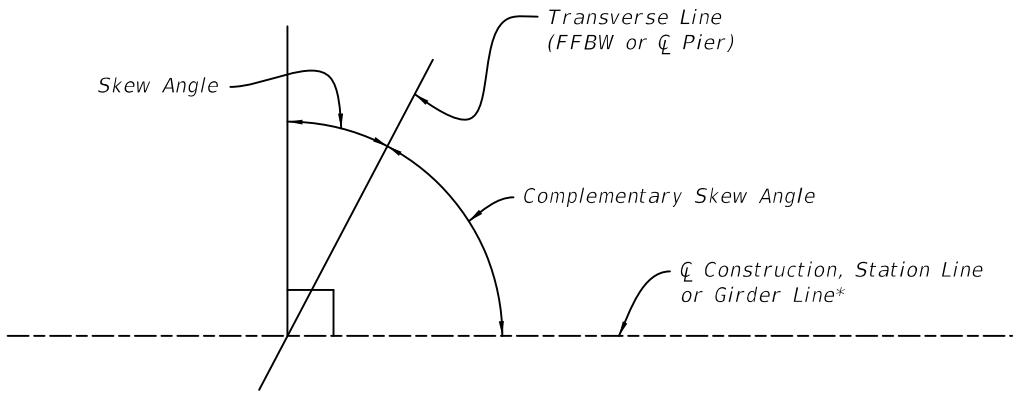

SKEW ANGLE AND COMPLEMENTARY ANGLE

* For bridges with horizontally curved alignments, measure the skew from a line tangent to the curve

B. The skew angle referred to by computer geometry programs may actually be complementary to the plan skew angle. The sum of the skew angle and the complementary skew angle is 90 degrees.

2.15 USING STANDARD ABBREVIATIONS

A. Do not use abbreviations when the meaning may be in doubt.

B. Avoid abbreviations in titles, subtitles, and notes.

C. For Standard Abbreviations, see ***Design Standards*** Index 001.

D. Use periods after all abbreviations other than those on ***Design Standards*** Index 001 noted above.

E. Define abbreviations in the General Notes or by placing a legend on the sheet containing the abbreviations.

2.16 ARROWS (Rev. 01/17)

A. North Arrow - Place North Arrows on drawings to aid in orienting the drawings to the actual site and bridge (or structure) location and orientation.

B. Direction of Stationing Arrow - Use an arrow to indicate the direction of stationing on plan views, superstructures, substructures etc., as well as orientation references of details and sections. Refer to ***SDM*** 2.8 regarding plan orientation.

C. Directional Arrow for Water Flow - Use an arrow to indicate direction of stream and/or tidal flow of water. The tidal flow arrow cell is located in the Structures Bar Menu.

D. Use the North Arrow or Direction of Stationing Arrow on all sheets requiring directional orientation. See instructions for individual sheets for more information.

E. Arrows for labeling - Use a leader line with standard dimensioning arrow for component call-outs, for labeling or identifying features or characteristics of components and for labeling centerlines, baselines, etc. Small components, e.g. reinforcing bars shown in section, and other special features may be labeled using a leader line with a small circle placed around the component or feature. When pointing to the surface or body of a component or feature, use a tilde in addition to an arrow. See Figure 2.16-1.

Figure 2.16-1 Labeling Arrow Detail

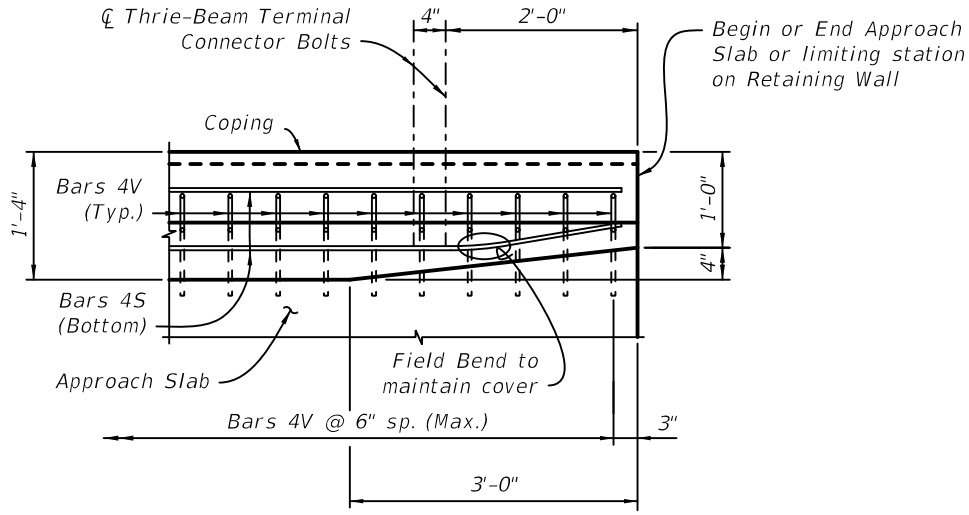

PLAN - Railing End Transition
(Showing Bars 4V and 4S)

3 COMPOSITION OF PLAN SET

3.1 STRUCTURES SHEET NUMBERS (Rev. 01/17)

A. Bridge plans are usually a component set of plans and may include walls. Projects with minor bridge work may include the bridge and wall features on sheets in the roadway plan set. When structures are prepared as a component set of plans, assemble the drawings as a separate plan set complete with a key sheet, quantities sheets, all bridge and wall sheets and the existing bridge plans. Number the sheets consecutively with the sheet numbers prefixed by the letter and letter/number combinations "B" for common sheets, "BQ" for bridge quantity sheets, "B1" for the first bridge, "B2" for the second bridge, "B3" for the third bridge, etc., "BW" sheets for walls, and ending with the existing bridge plans, "BX1", "BX2", "BX3", etc., if applicable.

Modification for Non-Conventional Projects:

Delete ***SDM*** 3.1.A and insert the following:

A. Bridge plans are usually a component set of plans and may include walls. Projects with minor bridge work may include these bridge and wall features on sheets in the roadway plan set. When structures are prepared as a component set of plans, assemble the drawings as a separate plan set complete with a key sheet, all bridge and wall sheets and the existing bridge plans. Number the sheets consecutively with the sheet numbers prefixed by the letter and letter/number combinations "B" for common sheets, "B1" for the first bridge, "B2" for the second bridge, "B3" for the third bridge, etc., "BW" sheets for walls, and ending with the existing bridge plans, "BX1", "BX2", "BX3", etc., if applicable.

B. Start the sheet numbering with the Key Sheet numbered "B-1". If quantities are required in a component set of plans, place the bridge quantity "BQ" sheets behind the Index/Key Sheet. Begin the quantities sheet numbering with the prefix "BQ1" for quantities associated with the first bridge ("BQ1-1", "BQ1-2", etc.); continue the pattern for the remaining bridges ("BQ2-1" "BQ4-3", etc.), then return to the "B" prefix numbering for sheets with details common to all the bridges. Begin the sheet numbering for the first sheet of the first bridge with "B1-1". Continue to use the "B1" prefix for all sheets with details pertaining to the first bridge ("B1-2", "B1-3", etc.). Number the second series of sheets for the next bridge, if included, "B2-1", "B2-2", "B2-3", etc., continuing to use the "B2" prefix for all sheets of the second bridge. Continue incrementing sheet prefix numbers, "B3-1", "B4-1", etc., for each additional bridge included in the plans. To further divide bridge sheets on complex bridge projects, use a Reference Drawing Number box in the lower right hand corner of the sheet (see ***SDM*** 3.5). After all the bridge plans, place all the wall drawings (including cast-in-place retaining walls, proprietary wall control plans, temporary walls, noise walls and perimeter walls) using a "BW" sheet prefix. To further divide wall sheets by wall number or type, use the Reference Drawing Number box in the lower right hand corner of the sheet (see ***SDM*** 3.5). At the end of the plan set, place all existing bridge

sheets for each bridge in one PDF file named "B1ExistingPlans.pdf" for the first bridge (number sheets sequentially "BX1-1", "BX1-2", etc.) and "B2ExistingPlans.pdf" for the second bridge, etc.

Modification for Non-Conventional Projects:

Delete ***SDM*** 3.1.B and insert the following:

B. Start the sheet numbering with the Key Sheet numbered "B-1" and continue to use the "B" prefix for all sheets with details common to all the bridges. Begin the sheet numbering for the first sheet of the first bridge with "B1-1". Continue to use the "B1" prefix for all sheets with details pertaining to the first bridge ("B1-2", "B1-3", etc.). Number the second series of sheets for the next bridge, if included, "B2-1", "B2-2", "B2-3", etc., continuing to use the "B2" prefix for all sheets of the second bridge. Continue incrementing sheet prefix numbers, "B3-1", "B4-1", etc., for each additional bridge included in the plans. To further divide bridge sheets on complex bridge projects, use a Reference Drawing Number box in the lower right hand corner of the sheet (see ***SDM*** 3.5). After all the bridge plans, place all the wall drawings (including cast-in-place retaining walls, proprietary wall control plans, temporary walls, noise walls and perimeter walls) using a "BW" sheet prefix. To further divide wall sheets by wall number or type, use the Reference Drawing Number box in the lower right hand corner of the sheet (see ***SDM*** 3.5). At the end of the plan set, place all existing bridge sheets for each bridge in one PDF file named "B1ExistingPlans.pdf" for the first bridge (number sheets sequentially "BX1-1", "BX1-2", etc.) and "B2ExistingPlans.pdf" for the second bridge, etc.

C. For stand alone projects, the summary of quantities sheets should follow the structures Key Sheet. General summary of quantity sheets for non-bridge items and MOT should be numbered using the "BQ" prefix followed by the bridge quantities with "BQ#" prefixes as necessary. For more information on summary of quantities see ***PPM*** Volume 2, Chapter 7 and the ***Basis of Estimates Manual***.

Modification for Non-Conventional Projects:

Delete ***SDM*** 3.1.C.

D. Number other miscellaneous structures (signs, signals, lighting, etc) for the appropriate component set (see ***PPM*** Volume 2, Chapter 2) but place the drawing files in the Structures folder (see the ***CADD Manual***, Section 4.13.8). Use the Roadway border with initials found in the Structures Bar Menu for miscellaneous structures.

E. The preferred sheet order along with the file naming conventions and other CADD requirements are shown in the ***CADD Manual***, Section 4.13.8. All the sheets given in the Table may not be required in a given set of plans, while in others, additional sheets may be necessary. Any sheet name not listed in the table will be flagged and not checked for compliance by the Quality Control checker (QC checker). The sheet order should correspond to the work sequence.

3.2 SHEET TITLES

If more than one sheet is required for a particular sheet type, add sheet numbers in the Sheet Title Block; e.g.: "General Notes (1 of 2)", "General Notes (2 of 2)".

3.3 SHEET REFERENCES FOR MULTIPLE BRIDGES AND/OR STRUCTURES

The drawings for a specific bridge may refer to other drawings with sheet numbers beginning with the same prefix letter and number or with the letter "B". For example, sheets in the B1-XX series may refer to any other sheet within the B1-XX series or the B-XX series but shall not refer to sheets in the B2-XX series or B3-XX series, etc.

3.4 SHEET NUMBERS ON PROJECTS WITH ALTERNATE STRUCTURE TYPES

On projects with alternate structure types, designate each alternate for each bridge with a unique number following the "B" prefix (e.g. "B1" and "B2" for bridge 1 alternates; "B3" and "B4" for bridge 2 alternates, etc.). Since the sheet number will no longer correspond to the bridge number, cross reference each alternate with the bridge number in the List of Drawings.

Modification for Non-Conventional Projects:
Delete ***SDM*** 3.4.

3.5 REFERENCE DRAWING NUMBER BOX (Rev. 01/17)

When developing complex bridges or multiple wall systems, use the Reference Drawing Number box in the lower right hand corner on the plans to separate components and help in the development of cross references. Drawing letter/number combinations are assigned at the discretion of the designer and shall include prefix combinations that correspond to the details on the drawing. The information in the Reference Drawing Number box is only used for cross referencing and plan preparation; no data from the box will be used in the Electronic Delivery process. For drawing letter/number combination suggestions, see the ***CADD Manual***, Section 4.13.8. Optional Reference Drawing Number box is required on all bascule bridges or bridges with multiple wall types. For projects with alternate designs, follow the Reference Drawing Number with the alternate designation (e.g. Drawing No. 45, Alt. B).

Modification for Non-Conventional Projects:
Delete ***SDM*** 3.5 and insert the following: When developing complex bridges or multiple wall systems, use the Reference Drawing Number box in the lower right hand corner on the plans to separate components and help in the development of cross references. Drawing letter/number combinations are assigned at the discretion of the designer and shall include prefix combinations that correspond to the details on the drawing. The information in the Reference Drawing Number box is only used for cross referencing and plan preparation; no data from the box will be used in the Electronic Delivery process. For drawing letter/number combination suggestions, see the ***CADD Manual***, Section 4.13.8. Optional Reference Drawing Number box is required on all bascule bridges or bridges with multiple wall types.

3.6 PHASE SUBMITTAL REQUIREMENTS

For a summary of phase submittals, see ***PPM***, Volume 1, Chapter 26.

Modification for Non-Conventional Projects:
Delete ***SDM*** 3.6 and see the RFP for requirements.

3.7 USE OF FDOT DESIGN STANDARDS

A. The current FDOT Design Standards comprise the best practices of the FDOT in design code compliance, pay item consistency, and Specification coordination. See the ***Instructions for Design Standards (IDS)*** for additional information.

Modification for Non-Conventional Projects:
Delete ***SDM*** 3.7.A and insert the following: A. The current FDOT Design Standards comprise the best practices of the FDOT in design code compliance and Specification coordination. See the ***Instructions for Design Standards (IDS)*** for additional information.

B. In structures and wall plans, reference the applicable FDOT Design Standards by general description and index number. Place the reference on the primary drawings depicting the component. In many instances, several plan references are appropriate (e.g. beam index number references on framing plan and cross section sheets.) Provide at least one index number for each Design Standard used. Note the governing Design Standards and revised Index drawings on the lead project Key Sheet (see ***PPM***, Volume 2, Chapter 3). Do not include a list of Design Standards on the Index of Sheets.

C. Some Design Standards for structural components, e.g. prestressed beams, approach slabs, bearing pads, etc., require supplemental tables, notes and or graphics to be completed and included in the plans by the designer. Select the appropriate tables, notes and or graphics using the FDOT CADD software. For the latest version of the FDOT CADD software, go to: http://www.fdot.gov/cadd/. For the latest version of the Structures Design Standards Data Table cell library (V8semi-standards.cel), go to: http://www.fdot.gov/structures/CADD/standards/CurrentStandards/MicrostationDrawings.shtm

D. For the Design Standards, see the Roadway Design Office's web site at: http://www.fdot.gov/roadway/DesignStandards/Standards.shtm.

Commentary: Specific references to the appropriate Design Standards are necessary to clarify the Designer's intent to the Contractor.

3.8 EXISTING PLANS (Rev. 01/17)

Incorporate pertinent and related existing structures plans into new Contract Plans. For widening and bridge replacements, include the entire existing plan set in the Contract Plans. For other types of work, incorporate only those sections of the existing structure plans that may need to be referenced during work activities associated with the Contract Plans. When available, existing plans may be obtained from the District. Existing plans should be legible and reproducible for inclusion in the Contract Plans. See the ***CADD Manual***, Section 4.13.8 for Existing Plans file naming and formats required for Electronic Delivery. Add plan note indicating that existing plans are not available when applicable.

Modification for Non-Conventional Projects:
Delete ***SDM*** 3.8 and insert the following: For bridge widenings include the existing bridge plans in the contract plan set.

4 CONCRETE COMPONENTS

4.1 GENERAL (Rev. 01/17)

A. Concrete components for bridges are custom constructed either in place at the bridge site or at a precast facility and require clear, complete and fully detailed plans.

B. The concrete outlines, reinforcing steel, prestressing strands and/or post-tensioning tendons must be easily distinguishable. This can be accomplished by using the appropriate preset levels in the MicroStation Structures seed file provided by the ECSO with the FDOT software package and/or following the symbology guidelines provided in Section 4.13.8 of the ***CADD Manual***.

C. When detailing concrete components, show plan and elevation views along with sections and any details necessary for construction.

4.2 ITEMS EMBEDDED IN CONCRETE COMPONENTS

Show the vertical and horizontal locations of reinforcing steel, prestressing strands and/or post-tensioning tendons. Normally, the spacing, location and limits of reinforcing steel can be adequately shown with a few representative bars which are clearly labeled and/or dimensioned. It is important to ensure that all reinforcing steel is clearly identified without over complicating the drawing.

4.3 REINFORCING STEEL

A. Detail reinforcing bars in plan, elevation and sections to clearly indicate the size, location and spacing of individual bars. Show the number of reinforcing bars in plan or elevation views.

B. Usually, in plan or elevation views, only the first bar and the last bar of a series of bars need be drawn, and the number and spacing indicated between. Show all bars in section views.

C. Show the number of bars, followed by a tilde, the bar mark and the spacing. For example, 12 ~ 8 A1 @ 6" means 12 bars, Size #8, Designation A1 (8A1 is the ‘Mark’) at 6 inch spacing. The symbol "@" is optional for the word "at".

D. #4 bars are the smallest reinforcing steel size used in cast-in-place components for bridges.

E. Each bar designation is to be unique within a single concrete component. A bar designation may be a single letter or a combination of a letter and a number, e.g. "D", "A1". Designate bars that have a unique size, shape, length or application using only a letter, and designate the individual bars within a group that have similar shapes, applications or locations within a component using a combination of a common letter and a unique number. If a combination of a letter and a number is used, start each combination using the number "1" and do not skip numbers. Exceptions to this numbering practice are acceptable, and sometimes preferable, for the bar lists for

multiple similar components in which some, but not all, of the exact same bars are used, e.g. pier segments, expansion joint segments and typical segments in segmental box girder bridges. The desired result of skipping numbers in these cases is increased consistency and clarity between the individual bar lists for the individual components. Where bars are shown in multiple views, bill bars in the view in which they are first encountered and only reference for clarity in other views. See Figure 4.3-1.

F. Do not use the letters “I”, “O”, or “Q” in bar mark designations.

Figure 4.3-1 Reinforcing Bar Callout Detail

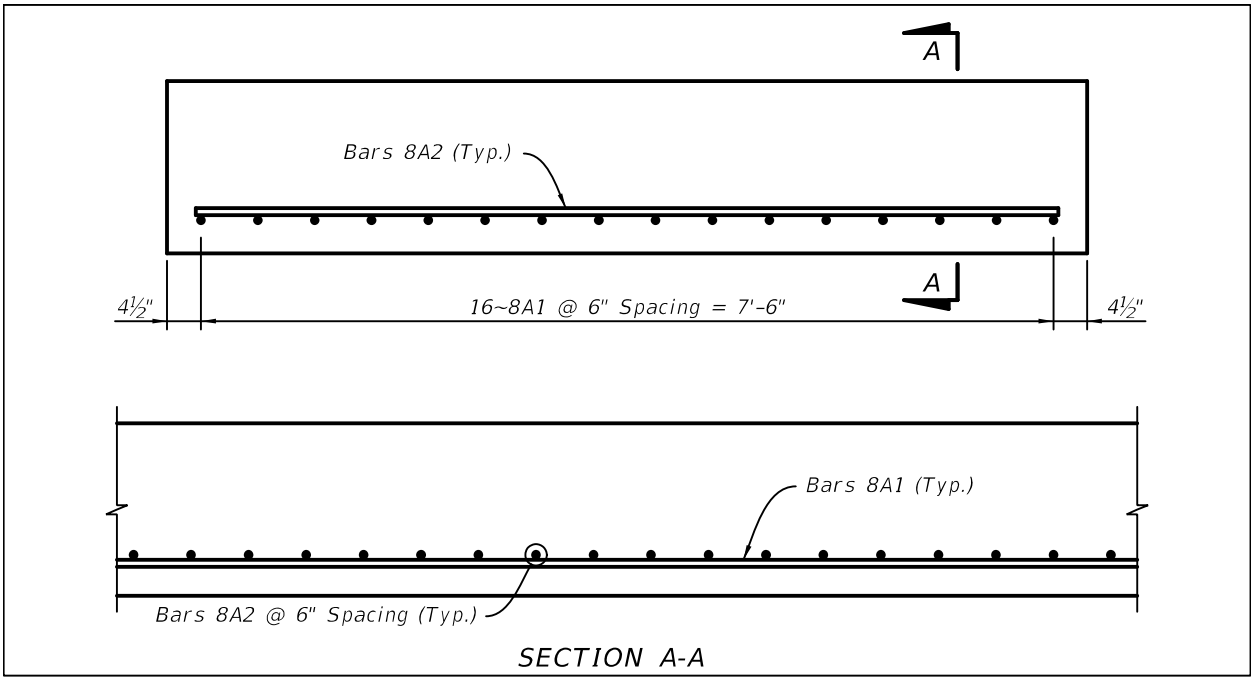

4.3.1 Maximum Bar Spacing

A. For maximum bar spacing for shrinkage and temperature, see ***LRFD*** [5.10.8].

B. For horizontal reinforcing steel in walls, the distance from the top of footing to the first bar in the stem is a maximum of one half the spacing of the bars immediately above it.

C. Bar spaces, plus cover to centerline of bars must equal the concrete dimension of the member. Use the following procedure to detail multiple bars equally spaced where the number of spaces times the nominal spacing does not exactly equal the overall concrete.

14 Bars @ 5½"± = 6'-0" or 13 sp @ 5½"± = 6'-0"

This means 13 equal spaces. The symbol “@” means “at”, and the symbol “±” means “approximately.”

4.3.2 Minimum Bar Spacing

A. For minimum bar spacing, see ***LRFD*** [5].

B. When multiple bars are lapped at the same location, the required minimum spacing measured between laps must be equal that for parallel bars.

C. Avoid using bundled bars. If bundled bars are required, they must meet ***LRFD*** requirements.

4.3.3 Minimum Concrete Cover

See ***SDG*** for minimum concrete cover requirements.

4.3.4 Fit and Clearance

A. Check reinforcing fit and clearance by calculations and with large scale drawings. Skews tend to aggravate problems of reinforcing fit. Consider tolerances normally allowed for cutting, bending and locating reinforcing. Refer to ***CRSI Manual of Standard Practice*** for industry fabrication tolerances.

B. Some common areas of interference are:

1. Between deck reinforcing and supporting element reinforcing, such as girder stirrups and monolithic end bent or intermediate bent.
2. Vertical column bars projecting through pier cap reinforcing.
3. Areas near expansion devices.
4. Anchor bolt or rod blockouts for girders.
5. At anchorages for post-tensioning systems.
6. Between prestressing (pretensioned or post-tensioned) steel and reinforcing steel stirrups, ties, etc.
7. Between column bars to be lapped with footing dowels.
8. Drilled shaft steel projecting through footing steel.
9. Bars with large radii spaced close together or where fabrication tolerances exceed placement tolerances.
10. Bars greater than size #11 where fabrication tolerances are increased.

4.3.5 Bar Splicing

A. Detail splices for main reinforcement bars of different sizes. Other bars may be shown as "continuous" without showing splice locations because splices are detailed on the Reinforcing Bar List. Indicate splice locations as required (i.e., phase construction, construction joints, etc.). Detail locations and splice lengths for main reinforcing. Use mechanical splices or other positive connections for bars larger than #11.

B. For tension splices, the smaller bar governs the length of a lap splice between bars of different sizes.

C. For compression splices, the larger of the splice length of the smaller bar or the development length of the larger bar, governs.

D. Wherever practical, stagger main reinforcing bars so that only one-third are spliced at the same location. Exceptions include:

   1. Phased construction.
   2. Flat slab construction.
   3. Compression zones.
   4. Bases of stems of cantilevered retaining walls.

4.3.6 Dowels

Show minimum embedment length on the plans. Use standard hook bends when bent bars are used and depth of embedment permits. Show bent bars used for footing dowels resting on the bottom reinforcing steel mat in the footing. Verify that the minimum embedded length does not violate minimum cover requirements.

4.3.7 Bars in Section

A. Draw sections at a scale adequate to clearly show reinforcing details.

B. For stirrups and other bars not shown end-on, represent bars with single, unbroken lines at scales less than 1/2"=1'-0" and double, unbroken lines at 1/2" scale or larger.

C. Draw tie and stirrup hooks to scale. Dimensions are not necessary, unless it is a non-standard bar bend.

D. Use small circles to represent bars shown end-on. Circles may be left open or shown solid (filled). Use the chosen symbol consistently throughout the drawings. Show bars as filled circles when holes are also shown.

E. Identify bars shown end-on by leaders with circles or arrowheads pointing to the bar.

F. For complex reinforcing patterns, cut sections at specific locations along a member rather than showing a typical section.

G. Show corner bars enclosed by stirrups or ties at the corner of the bend.

4.3.8 Hook Bars

When the required concrete cover cannot be maintained with normal orientation of the hook, add the following note to the plans: "Rotate bar as necessary to maintain required cover."

4.3.9 Maximum Reinforcing Bar Lengths

#4 Bars and larger: 60 feet.

4.3.10 Reinforcing Bar Lists

A. Refer to ***Design Standards*** Index 21300, Standard Bar Bending Details and the ***Instructions for Design Standards (IDS)***.

B. Using FDOT "Rebar Program", provided with the FDOT Structures Bar Menu, generate a reinforcing bar list for each structure. Provide a labeled tabulation for every reinforced component (i.e., bents, piers, deck, approach slabs, etc.) Each bar designation must be unique for a given component but may be repeated for separate components. Designate bars "A1", "A2", "B1" etc. Show a separate section in the reinforcing bar list for each component and construction phase on a project. Prestressed beams, piles, concrete sheet piles and traffic railings that are shown in the Design Standards do not need to be included on the reinforcing bar list.

C. Dimension all bars "out-to-out". Round the overall length of each individual bar to the next inch. Show all straight bar dimensions rounded to the nearest inch.

D. Separate reinforcing for sub-components into a logical sequence similar to the order in which they will be constructed. Identical components should be grouped together. The following list should be used as a guide of the minimum breakdown of sub-components.

Substructure

- End Bent
- Footing
- Column/Pier
- Bent Cap

Superstructure

- End Diaphragms (if required)
- Intermediate Diaphragms (if required)
- Deck

Approach Slabs

Walls

- Footing
- Wall/Cap
- Deadman Anchor

4.3.11 Maximum Reinforcing Steel Bar Sizes

A. Use the following maximum reinforcing steel sizes for design and detailing.

B. Use the smallest practical bar size in order to minimize stress concentrations, increase bonding strength, decrease corrosion potential, and comply with ***LRFD*** crack control criteria.

Table 4.3.11-1 Maximum Reinforcing Steel Bar Sizes

Bridge Component	Maximum Bar Size	Comments
Drilled Shafts	#18	For #14 and #18 bars, no bundling or bar bends
Footings	#11	
Pier Columns	#11 Main reinforcing #6 Ties	
Pier/Bent Caps	#11 Main reinforcing #6 Stirrups	
Webs of Segmental Boxes	#7	

4.4 CONCRETE SURFACE FINISHES (Rev. 01/17)

A. If the use of coatings, tints or stains is necessary to meet project specific requirements in accordance with the limitations specified in ***SDG*** 1.4.5, show the limits of the areas to be treated in the plans. See examples of how to depict the limits of treatments in Figure 4.4-1, Figure 4.4-2, Figure 4.4-3 and Figure 4.4-4. For bridges and retaining walls with Class 5 coatings, show appropriate "Class 5 Applied Finish Coating" notes in the General Notes and the corresponding Surface Finish Details on the General Notes drawing. For noise walls, see the ***Instructions for Design Standards*** Index 5200. For perimeter walls, see the ***Instructions for Design Standards*** Index 5250. If the finish color is other than Federal Color Standard No. 595, color No. 36622 (standard concrete gray) (or Color No. 36642 for uncoated weathering steel bridges), specify the appropriate number(s) for the desired color(s). Do not use generic or brand names for colors, e.g. Pearl Grey. Provide similar notes and details for the use of tints and stains.

B. If the use of an anti-graffiti coating is necessary to meet project specific requirements, show the limits of the areas to be coated in the plans. See examples of how to depict the limits of anti-graffiti coatings and recommended areas to be coated in Figure 4.4-1, Figure 4.4-2, Figure 4.4-3 and Figure 4.4-4. Specify the type of anti-graffiti coating to be used in the plans, e.g. sacrificial or non-sacrificial.

Modification for Non-Conventional Projects:
Delete ***SDM*** 4.4 and Figures 4.4-1, 4.4-2, 4.4-3 and 4.4-4 and see the RFP for requirements.

Figure 4.4-1 Example Surface Finish Depictions on Grade Separation Structures

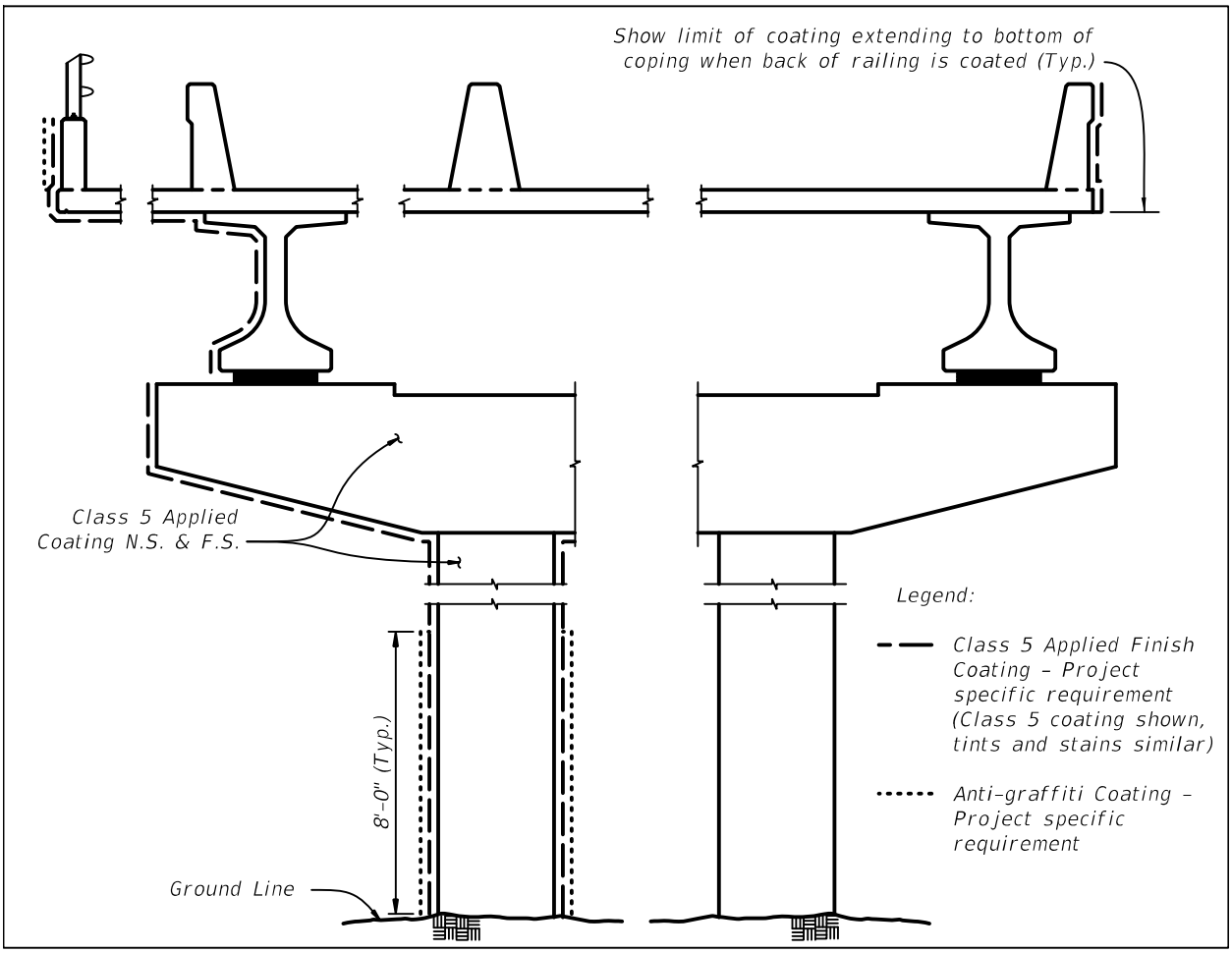

Figure 4.4-2 Example Surface Finish Depictions on Waterway Crossings and Railroad Separation Structures

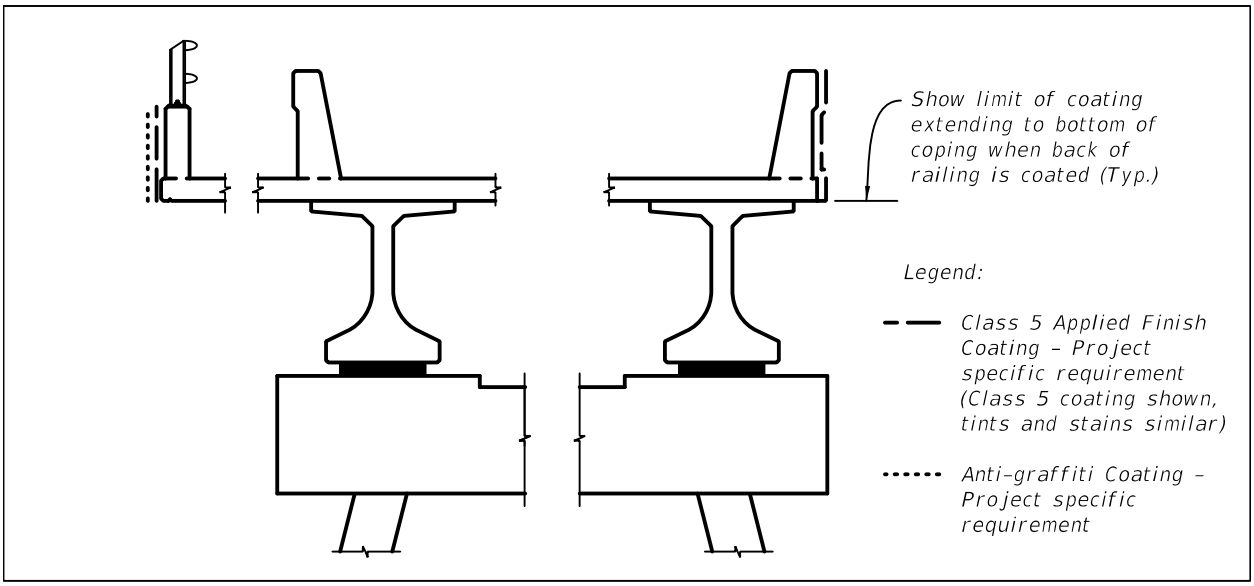

Figure 4.4-3 Example Surface Finish Depictions on Concrete Noise and Perimeter Walls and Retaining Walls Without Traffic Railings or Parapets

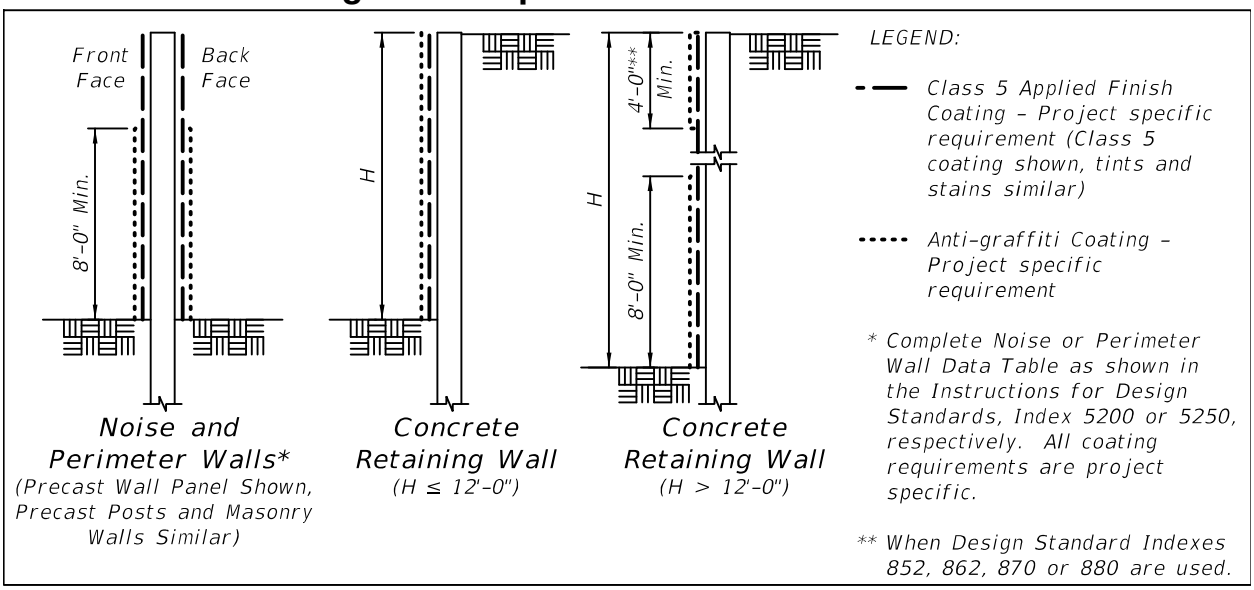

Figure 4.4-4 Example Surface Finish Depictions on Retaining Walls with Traffic Railings or Parapets

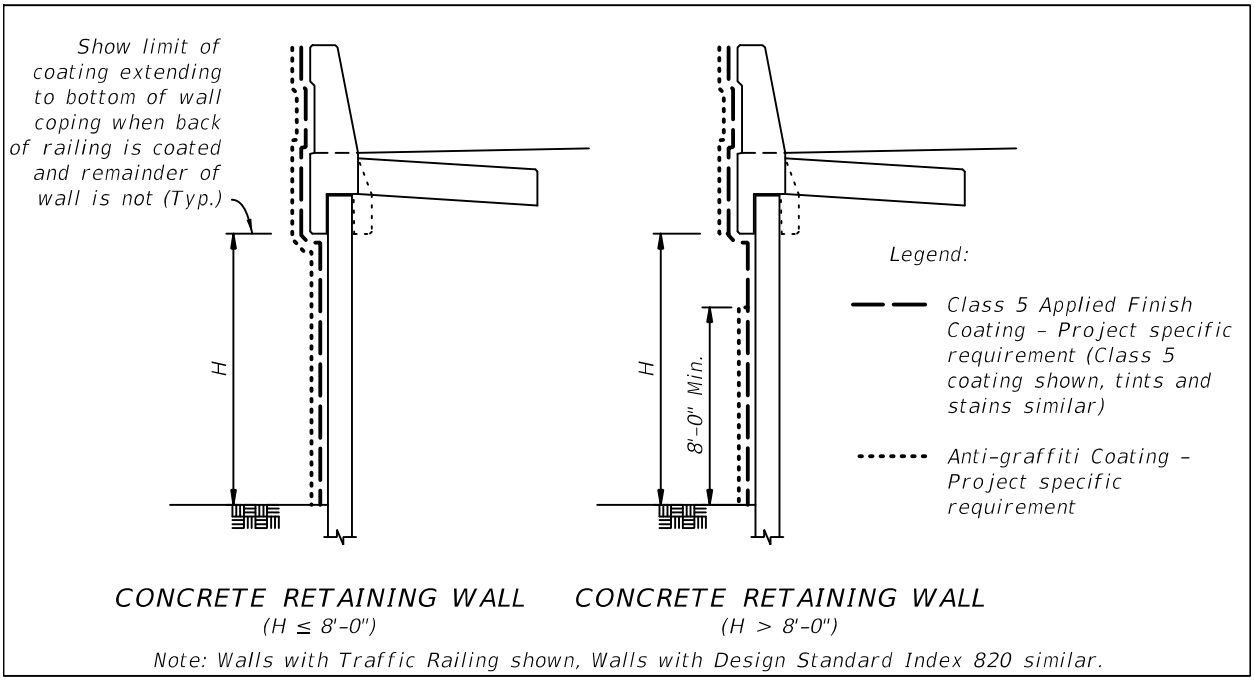

5 GENERAL NOTES AND PAY ITEM NOTES

Modification for Non-Conventional Projects:

Delete the title of ***SDM*** Chapter 5 and insert the following:

5 GENERAL NOTES

5.1 GENERAL NOTES

A. Prepare a complete set of General Notes for each project.

B. As the first item under General Notes, list the version of the Structures Manual and any subsequent Structures Design Bulletins used as the basis for the design of the plans.

C. On projects that require two different construction methods (e.g., prestressed concrete beams and steel girders), show separate General Notes for each method of construction and identify the method to which they apply.

D. Organize notes under headings for Concrete Notes, Steel Notes, etc.

E. Include all General Notes and Pay Item Notes on the General Notes sheet. Notes for a specific element may be shown on the first sheet showing that element. The Index of Sheets is generally a separate sheet but may be included on the General Notes sheet if space permits. Do not include a list of Design Standards in the Index of Sheets.

Modification for Non-Conventional Projects:

Delete ***SDM*** 5.1.E and insert the following:

E. Include all General Notes on the General Notes sheet. Notes for a specific element may be shown on the first sheet showing that element. The Index of Sheets is generally a separate sheet but may be included on the General Notes sheet if space permits. Do not include a list of Design Standards in the Index of Sheets.

F. Do not repeat notes or details shown in the Design Standards. Do not use General Notes or any other plan notes to repeat or modify requirements stated in the Specifications. If project specific modifications to the Specifications are required, prepare either a Modified Special Provision or a Technical Special Provision. Contact the District Specifications Office for guidance.

G. Use performance criteria. Provide justification if a patented or proprietary product or process is required. Refer to the Guidance for Approval of Proprietary Products on the State Specifications and Estimates Office website and the Construction Program Guide - Patented and Proprietary Products on the FHWA website. Do not require a patented or proprietary product or process with the term "or equal." Contact the District Specifications Office for further guidance.

Modification for Non-Conventional Projects:

Delete ***SDM*** 5.1.G.

5.2 TYPICAL GENERAL NOTES (Rev. 01/17)

The following is a sample of typical notes to be included on the General Notes sheet. Place these notes on the General Notes sheet and modify for project-specific requirements:

A. Design Specifications

1. FDOT Structures Manual dated January 20XX and subsequent Structures Design Bulletins [XX-XX], [XX-XX] and [XX-XX].
2. American Association of State Highway and Transportation Officials (AASHTO) Load and Resistance Factor (LRFD) Bridge Design Specifications, [Xth] Edition and all subsequent interims.
3. FDOT Plans Preparation Manual dated January, 20XX and subsequent Roadway Design Bulletins [XX-XX], [XX-XX] and [XX-XX].

B. Governing Standards and Construction Specifications

Florida Department of Transportation, 20XX Design Standards and revised Index Drawings as appended herein, and [January/July] 20XX Standard Specifications for Road and Bridge Construction, as amended by Contract Documents.

C. Vertical Datum

[Indicate which vertical datum is used on the project - NAVD 88 or NGVD 29].

D. Environment

Bridge Number	Superstructure	Substructure	
		Concrete	Steel
700XXX	Slightly	*	*
407XXX	Moderately	*	*
121XXX	Extremely	*	*

* List the environmental classification [Slightly, Mod., Extrem.] and controlling criteria (pH, Cl, SO_4, Resistivity).

E. Design Methodology

Load and Resistance Factor Design (LRFD) method using strength, service [extreme event] and fatigue limit states. For bridges designed by grid or 3-D analyses provide name and version number of design software.

F. Design Loadings

1. Live Loads: HL-93 with Dynamic Load Allowance
2. Dead Loads:

32” F-Shape Traffic Railing	420 plf
32” F-Shape Median Traffic Railing	485 plf
Stay-In-Place Forms	20 psf
Reinforced Concrete	150 pcf
Future Wearing Surface	15 psf

[OR Design does not include an allowance of 15 psf for Future Wearing Surface.]

The __-inch deck thickness includes a one-half inch sacrificial thickness included in the dead load of the deck but omitted from the section properties used for design. [Include note when profilograph requirements of SDG Chapter 4 apply].

3. Construction Loads:

   Finishing Machine Load: ___ kips

   Finishing Machine Wheel Location beyond the edge of deck overhang: 6 inches

   Construction Live Load: 20 psf extended over the entire bridge width and 50-feet in longitudinal length centered on the finishing machine.

   Removable Deck Cantilever Timber Forms with Overhang Brackets: 15 psf

   Live load at or near the outside edge of deck during deck casting: 75 plf applied as a moving load over a length of 20 feet.

   Construction Inactive Design Wind Speed: 90 MPH

   Velocity Pressure Exposure Coefficient (k_z): 1.14

   Construction Active Design Wind Speed: 30 MPH

4. Vehicle Collision Force: New Pier Columns have been designed to withstand the 600 kip vehicular collision force per LRFD.

5. Utilities: No allowance for utility loads has been included in the design. [If allowance for utility loads has been included, indicate the magnitude and location of the loads used in the design.]

G. Materials

1. Reinforcing Steel: Grade 60 carbon steel per Specifications Section 931.
2. Concrete:

Concrete Class	Min. 28-day Compressive Strength (psi)	Location of Concrete in Structure
II	3400	Traffic Railing
II (Bridge Deck)	4500	Bridge Deck
IV	5500	C.I.P. Substructure
V (Special)	6000	Prestressed Concrete Piles
VI	8500	Prestressed Concrete Beams

3. Concrete Cover: [Depends on Environmental Classification]

Cast-In-Place Superstructure (Top of Deck)	2½"
Cast-In-Place Superstructure (Except Top of Deck)	2"
Precast Prestressed Beams (Except Top Surface)	2"
Top Surface of Beam Top Flange	¾"
Cast-In-Place Substructure (Cast Against Earth)	4"
Cast-In-Place Substructure (Formed Surfaces)	3"
Cast-In-Place Substructure (Top of Beam Pedestals)	2"

Concrete cover dimensions shown in the plans do not include placement and fabrication tolerances unless shown as "minimum cover". See Specifications Section 415 for allowable tolerances. All dimensions pertaining to the location of reinforcing steel are to centerline of bar except where clear dimension is noted to face of concrete.

H. Applied Finish Coating

A Class 5 Finish Coating shall be applied to the portions of the structures shown on the Surface Finish Detail sheet(s).

I. Plan Dimensions

All dimensions in these plans are measured in feet either horizontally or vertically unless otherwise noted.

J. Utilities

For plan locations of existing utilities, see Plan and Elevation sheet(s). Locations of utilities, including under deck lighting, shown in the plans are approximate. For disposition of utilities, see the Utility Adjustment sheet(s) in the Roadway plans.

K. Bridge Name and Number

Place the following bridge name and number on the traffic railings in accordance with the Traffic Railing Design Standards:

[Use the name of the bridge or non-roadway facility being crossed or include the name of both facilities for roadway crossings. e.g.:

Name	Number
THOMASVILLE ROAD FLYOVER	550123
TOMOKA RIVER	750987
CSX RAILROAD	721234
US 19 OVER EAST BAY DR	100001]

L. Screeding Decks

Screed the riding surface of the Bridge Deck and Approach slabs to achieve the Finish Grade Elevations shown in the plans. Account for theoretical deflections due to self weight, deck casting sequence, deck forming systems, construction loads, overlays and temporary shoring, etc. as required.

M. Stay-In-Place Deck Forms

Design includes allowance for 20psf over the projected plan area of the metal forms for the unit weight of the metal forms and the concrete required to fill the form flutes. Stay-in-place forms are not allowed at deck cantilevers. Detail stay-in-place forms to clear top lateral bracing of box girders.

OR: Stay in place deck forms will not be permitted on this project.

N. Joints In Concrete

Construction joints will be permitted only at the locations indicated in the plans. Additional construction joints or alterations to those shown shall require approval of the Engineer.

O. Existing Bridge Construction Considerations

1. Dimension Verification: Unless otherwise noted, the dimensions, elevations and intersecting angles shown are based on the information as detailed in the Original Construction Plans of the existing bridges and may not represent as-built conditions. It is the Contractor's responsibility to verify this data before beginning construction and notify the Engineer of any discrepancies.

Modification for Non-Conventional Projects:
Delete ***SDM*** 5.2.O.1.

2. Existing Reinforcing Steel [Widenings]: All superstructure deck transverse reinforcing steel, both top and bottom layers, and end bent reinforcing steel, shall be protected, salvaged and utilized in the new structure. Cutting of this reinforcing steel and substitution of epoxy bonded dowels is not permitted as a construction option.

P. Traffic Control Plans

[Insert traffic control notes for the project and/or references to the Traffic Control Plans. Refer to Design Standards Index 600 for specific requirements related to overhead bridge construction.]

Q. Phasing Of Work

Work phasing and progression of the work shall conform to the Traffic Control Plans located in the Roadway Plans and the notes on the Construction Sequence Drawings.

5.3 TYPICAL STEEL GENERAL NOTES

Include the following additional general notes when structural steel is to be used in the project. Place these notes on or after the General Notes sheet and modify for project-specific requirements:

A. Structural Steel

All structural steel shall be in accordance with ASTM A709, Grade 50, HPS 50W or HPS 70W unless otherwise noted. Stiffeners, internal and external crossframes, lateral bracing and other ancillary items may be Grade 36 unless otherwise noted.

B. Charpy V-Notch

All members subjected to tensile stresses identified as main load carrying members shall be tested in accordance with Specifications Section 962.

C. Steel Fabrication

1. Make all shop splices in flanges and webs prior to welding flanges to webs. Indicate all splices on the shop drawings.
2. Shop assemblies are required in accordance with Specifications Section 460. [Specify shop assembly type based on Specifications Section 460. Contact the SDO and or DSDO as appropriate for recommendations and guidance.]
3. All ends of girders, bearing stiffeners, end diaphragms and pier diaphragms shall be vertical after dead load is applied [or normal to the bottom flange, see ***SDG*** 5.9]. All intermediate stiffeners, intermediate crossframes and field splices shall be normal to grade.

D. Welding

1. Perform non-destructive testing on welds as required by the current edition of the AASHTO/AWS D1.5 Bridge Welding Code.
2. Field welding to any structural steel for the purpose of attaching erection hardware or for anchoring conduits/boxes for box lighting shall be formally submitted to the Engineer for approval.
3. Field welding shall be per requirements of AASHTO/AWS D1.5 for non-ancillary items. Avoid damage to bearings when field welding sole plates to girder flanges. Replace bearings damaged by field welding at the Contractor's expense.
4. The following members are classified as ancillary members in accordance with the current edition of the AASHTO/AWS D1.5 Bridge Welding Code:
   a. Expansion Dams
   b. Drainage Components
   c. Sheet Piling
   d. Bearings

E. Field Connections

All field connections shall be made with [X]" diameter high strength bolts in accordance with ASTM A325 unless otherwise shown. Threads shall be excluded from the shear plane for plate thickness of ¾" or greater adjacent to the nut. Bolt heads shall be on the exterior/exposed face of the girders.

F. Painting

Specify one of the following notes as applicable:

1. Weathering steel is to remain uncoated, except as required by the ***Specifications***. (Steel Box-Girders)
2. Paint the outside face and bottom of Exterior Girders (and all exposed surfaces of Steel Straddle/Integral Pier Caps) with an Inorganic Zinc Coating System. Interior Girders and diaphragms/cross-frames are to remain unpainted.

3. Paint the outside face and bottom of Exterior Girders (and all exposed surfaces of Steel Straddle/Integral Pier Caps) with a High Performance Coating System. The color of the finish coat shall conform to Federal Standard No. 595, Color No. XXXXX. Interior Girders and diaphragms/cross-frames are to remain unpainted.
4. Paint all steel with an Inorganic Zinc Coating System.
5. Paint the outside face and bottom of Exterior Girders (and all exposed surfaces of Steel Straddle/Integral Pier Caps) with a High Performance Coating System. The color of the finish coat shall conform to Federal Standard No. 595, Color No. XXXXX. Paint Interior Girders and diaphragms/cross-frames with an Inorganic Zinc Coating System.
6. Paint all steel with a High Performance Coating System. The color of the finish coat shall conform to Federal Standard No. 595, Color No. XXXXX.

G. Ladders and Platforms

Structural steel ladders and platforms shall conform to ASTM A36 and shall be hot-dipped galvanized in accordance with Specifications Section 962. Welding shall conform to AWS D1.1.

5.4 TYPICAL PAY ITEM NOTES

Include in the Pay Item Notes information required to define, show limits of quantities or otherwise offer explanation to the list of Bridge Pay Items. Show all pay item notes in one location; not scattered throughout the plans. Examples are:

1. Bid on only one of the alternates designed.

   AA - Florida-I Beam Superstructure.

   AB - Steel Girder Superstructure.
2. For limits of removal of existing structures (Item Number 110-3), see Sheet No. XX-XX. (List sheets as needed)
3. Include the cost of furnishing and installing all conduit, junction boxes, expansion fittings and all associated hardware required to complete the installation of the underdeck luminaire related items in the contract unit cost for Lighting - Conductors, Pay Item 715-1-AB and Luminaire (Furnish and Install) (Wall Mount), Pay Item 715-11-125.

Do not include estimated structural steel quantities in the plans.

Modification for Non-Conventional Projects:
Delete ***SDM*** 5.4.

6 SLOPE PROTECTION

6.1 GENERAL (Rev. 01/17)

A. This chapter provides the bridge designer with the necessary information to develop plan details for appropriate slope protection. In most cases the standard details depicted for slope protection, with minor modifications will be suitable. In some cases, typically in tidal areas or when severe scour conditions exist, special designs and details may be required.

B. Design aids are available for slope protection details. Click the link to download the files in MicroStation .dgn format, or click the link or image below to view as a .pdf file. The details as presented are applicable only to end bents with rectangular wingwalls as shown. It is the designer's responsibility to make the appropriate project-specific modifications to these design aids before incorporating them into the plan set. Once the appropriate modifications have been made, the designer assumes the responsibility of Engineer of Record.

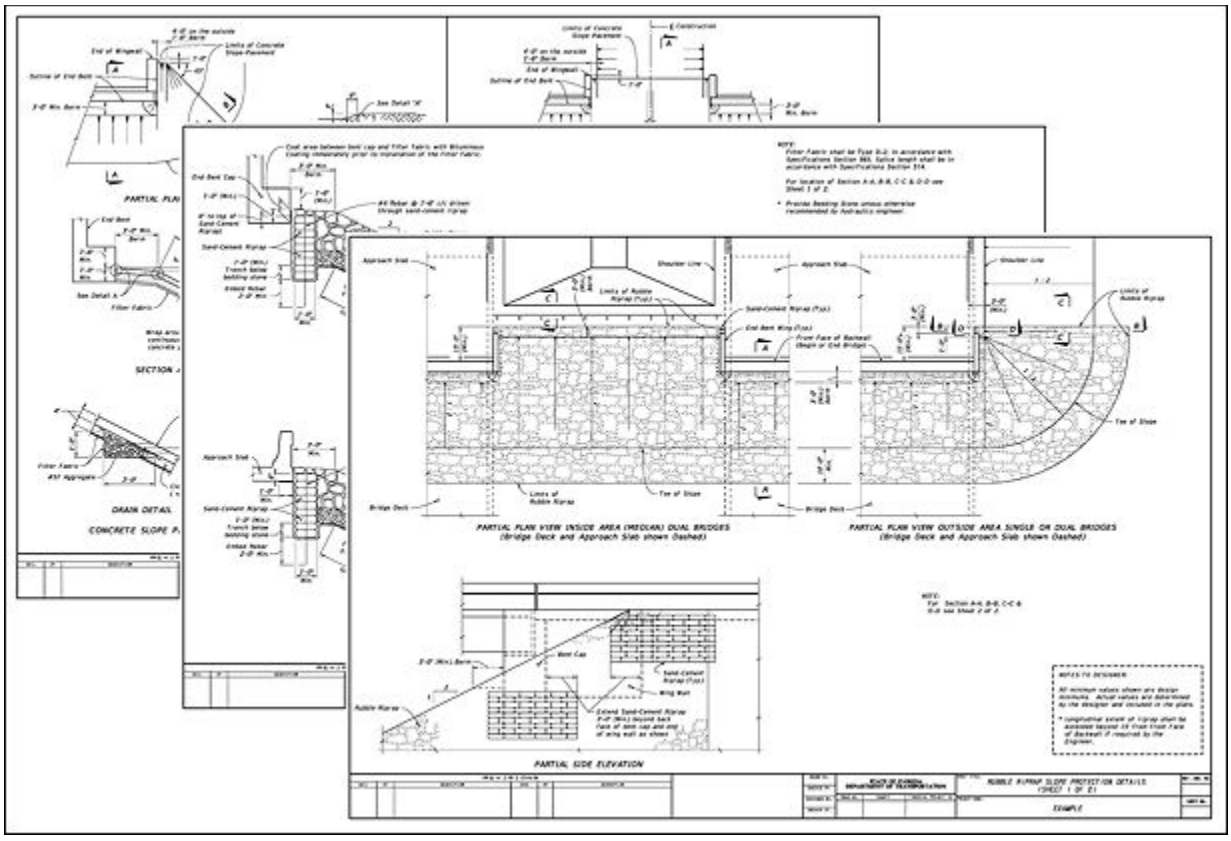

6.2 GRADE SEPARATIONS

A. For grade separation bridges, design slope pavement on 1:2 front slopes with provisions to extend erosion protection to a minimum of four feet outside the superstructure coping.

B. To protect railroad track embankments, use sand-cement riprap instead of slope pavement.

6.3 WATER CROSSINGS

A. The Drainage (Hydraulic) Engineer will determine the design and extent of the slope protection in accordance with the FDOT ***Drainage Manual*** and other applicable guidelines such as ***HEC-23***. The slope protection for spill-through abutments (End Bents) adjacent to water will be rubble riprap, articulated concrete block (cabled and anchored) or grout-filled mattress (articulating with cabling throughout the mattress). A 1:2 slope is the steepest allowable slope rate.

B. Bulkhead abutments can be protected by sheet piling or precast panels with toe protection provided by rubble riprap. Rubble riprap might also be recommended above the bulkhead or at its ends. Design the protection to extend at least four feet outside the superstructure coping.

C. See the ***Drainage Manual*** for slope protection requirements at locations subject to waves.

6.4 DUAL BRIDGES

Extend the slope protection in the median between dual bridges to include:

A. The entire median width for rural area bridges with a separated median width of forty feet or less.

B. The entire median width for urban area bridges with a separated median width of fifty feet or less.

C. The entire width for urban area bridges inaccessible due to physical barriers or when access is severely limited due to design features or vehicular movement that will impede the ability to maintain the facility.

7 PLAN AND ELEVATION

7.1 GENERAL

A. This drawing is the general layout of the bridge in plan and elevation views.

B. Draw Plan and Elevation views to the same vertical and horizontal scale if possible. In some cases a vertical scale larger than horizontal is required. More than one sheet may be required. If multiple sheets are used, show overlap between sheets for clarity.

C. It is preferred to have the plan and elevation shown on the same sheet.

D. For projects with multiple bridges, include a key map on the plan and elevation sheet showing the location of the subject bridge within the project. If multiple plan and elevation sheets are needed for a single bridge, the key map needs only to be on the first sheet.

E. Show the bridge and portions of adjacent roadways and walls in their completed configurations. Do not show temporary conditions including but not limited to temporary barrier or guardrail installations, temporary supports, partially constructed or removed sections of bridges or walls associated with phased construction, or traffic locations associated with Temporary Traffic Control Plans.

F. For examples illustrating the content and format of completed Plan and Elevation sheets, see the ***Structures Detailing Manual Examples***.

7.2 PLAN AND ELEVATION DRAWING - GENERAL

In general, include the following information on the Plan and Elevation sheet(s):

A. The bridge in both plan and elevation views, using an appropriate scale. Label views "PLAN" and "ELEVATION". This is mandatory for Bridge Development Reports and subsequent submittals.

B. All vertical and horizontal geometry including:

1. Horizontal alignment. (Horizontal curve data or Bearing of tangents.)
   a. Show PC and PT stations on plan view.
   b. Use horizontal curve data table cell from the Structures Cell Library for horizontal curve information.
   c. Show bearings of tangents on Station Line.
   d. Vertical and horizontal geometries for intersecting facilities.
2. Vertical alignment along PGL.
   a. When the bridge is on a tangent grade, show the grade and station and elevation of the nearest points of tangency.
   b. When the bridge is on a vertical curve, use the vertical curve data cell from the Structures Cell Library. Include a reference to the horizontal control line to which it applies. See ***SDM*** Chapter 2.

3. Superelevation Transition Diagram (when applicable)
   a. Show the PGL as a horizontal line.
   b. Show left and right copings and cross slope break lines, e.g., crowns and edges of sidewalks, as horizontal or sloping lines spaced proportionately above or below the PGL.
   c. Show copings and cross slope break lines as horizontal lines where the cross slope and transverse offset from the subject line to the PGL are constant along the length of the bridge.
   d. Show copings and cross slope break lines as sloping lines within the superelevation transition, or where the cross slope is constant but the transverse offset from the subject line to the PGL varies, e.g. flared bridge decks.
   e. Label all lines, cross slopes, limiting stations and vertical dimensions from the PGL to each line or line segment. Use different line styles as necessary for emphasis and clarity.
   f. Show a separate superelevation transition diagram for each individual bridge.

Commentary: The horizontal alignment, vertical alignment and superelevation transition diagram, when superimposed upon each other, establish the three dimensional geometry of the bridge deck. A similar diagram, with or without the presence of superelevation, can also be used to establish the three dimensional geometry of flared bridge decks.

When there is not enough space on the Plan and Elevation sheet(s) to show this information, include supplemental Profile Grade and Superelevation Transition Diagram sheet(s) as required.

C. North Arrow. Place in upper right corner of sheet when possible.

D. Traffic data (for each facility, if grade separation). Include as a minimum:
   - design speed
   - present and design year (+20) AADT
   - percentage of trucks

E. Adjacent roadway Guardrail, Concrete Barrier Wall and Pier Protection Barriers in Plan and Elevation views. Reference the appropriate ***Design Standards*** Index number.

F. Bridge-mounted lighting, signs and signals and related station/offset information.

G. Distance to nearest milepost from intersection of railroads.

H. All walls (temporary critical, permanent, MSE, etc.). Show graphic depiction and indicate wall type, number and designation.

I. Show shoreline in plan and elevation views using zero contour line or at location of MHW/NHW.

J. All applicable bridge numbers. For dual bridges, show bridge number inside the bridge in the plan view of the corresponding bridge.

K. Roadway lighting, if scale permits.

7.3 PLAN AND ELEVATION DRAWING - PLAN VIEW

At a minimum, include the following in the Plan View of the Plan and Elevation sheets:

A. Baseline, Centerline of Construction and Profile Grade Line(s) (PGL). Label whole stations and include 20ft tick marks. Indicate direction of stationing and station equations as required. Include centerline of lower roadways, canals, railroads, etc.

B. Stations at the following locations:

   1. Begin and end of bridge and approach slabs.
   2. Centerlines of bents or piers.
   3. Intersections of centerlines of lower roadways.
   4. Lower roadway, stream, railroad milepost or other physical feature at the location on the structure plan along the Station Line for the structure. Indicate bearing of tangents if applicable.

C. Skew angle at bents and intersecting base lines. See ***SDM*** 2.14 for details.

D. Direction of traffic. Show one arrow per lane.

E. Roadway width, traffic and pedestrian railing widths, inside and outside shoulder widths, lane widths, median width, sidewalk width, out-to-out width, gore area dimensions, width of widening and width of removal (including removal of slope protection).

F. Critical locations and dimensions of horizontal and vertical clearances. Identify location of low member.

G. Expansion joints. Use a solid line to indicate expansion joints in plan view.

H. Boring locations and labels.

I. All utilities, existing and proposed, buried and overhead. Also indicate status of utilities, e.g. placed out of service, to be relocated, etc.

J. Right-of-way lines (roadway, railroad, etc.)

K. Limits of slope pavements, sand cement riprap or rubble riprap. Indicate slope in the following format: V:H. Also indicate type of slope protection and toe of slope location.

L. Edge of shoulder.

M. Berm width.

N. Locations of deck drains that are large enough to be legible. Do not show small bridge scuppers.

O. Fender systems and navigation lights. Indicate clear channel width, centerline of channel and bearing of channel in plan view.

P. Direction of flow of waterway. Indicate if waterway is tidal.

Q. Waterline at MHW/NHW elevation.

R. Limits of environmentally sensitive areas such as wetland lines, seagrass delineations, etc. Ensure that lines shown in the plan view coincide with lines shown in permit applications.

S. Limits of existing bridge. Indicate existing bridge number. Consider hatching area to be removed, if any.

T. Locations of permitted work bridges or platforms. Ensure that the locations of work platforms are consistent with locations shown in any required permits. Alternatively, this information may be shown on Construction Access drawings.

U. Consider showing ship impact zones in plan view.

V. Portions of other existing or proposed bridges, retaining walls or other structures that are adjacent to, beneath or over the subject bridge. Coordinate wall depictions with the wall control drawings.

W. Limits of construction phases.

7.4 PLAN AND ELEVATION DRAWING - ELEVATION VIEW

Show the elevation view of the bridge as viewed along the right coping. Curved bridges may be better represented by a line cut along the centerline of roadway. At a minimum, include the following in the Elevation View on the Plan and Elevation sheets:

A. The elevation (vertical) scale on both sides of the elevation view.

B. Span lengths, approach slab lengths and overall length of bridge. Label and dimension continuous units/decks. Label simple span prestressed concrete beam superstructures with decks that are continuous over multiple spans as “x'-x" Continuous Deck with Simple Span Beams”. Label continuous concrete beam and steel girder superstructures as “x'-x" Continuous Unit”.

C. Location of expansion and fixed bearings and integral piers. Label as E, F and I, respectively. Also indicate expansion joints as EJ in elevation view.

D. Traffic railings, parapets and attachments such as bullet rails, fencing, etc. See also ***SDM*** 15.3 and ***SDM*** 15.4.

E. Existing ground and finished ground profiles, including sections of any intersecting road, railroad, waterway or other physical feature such as buildings or drainage structures, existing or proposed.

F. Low, mean and high water elevations as appropriate.

G. Embankment and canal slopes. Indicate the slope in the following format: V:H.

H. Location and value of minimum vertical clearance.

I. Location of where ground line is taken, i.e. ground line at centerline of construction or groundline at right edge of coping.

J. Roadway widths and clear distances to piers, space permitting.

K. Fenders. Also show clear channel width.

L. Foundation types. Indicate pile or shaft size as applicable.

M. Existing bridge, or portions of existing bridge, e.g. piles that are to remain, may be shown as required if they can be shown clearly. Consider hatching area to be removed, if any. If the existing bridge is not shown, include a note below the view title indicating that the existing bridge is not shown for clarity.

N. Portions or sections of other existing or proposed bridges, retaining walls or other structures that are adjacent to, beneath or over the subject bridge. Coordinate wall depictions with the wall control drawings.

8 BRIDGE HYDRAULICS RECOMMENDATION SHEET

8.1 PURPOSE

A. This drawing shows all pertinent hydraulic information necessary for the layout of a bridge at the location of a given water crossing.

B. This drawing is prepared by the Drainage Engineer of Record and should be included in the PD&E documents and/or must be in the 30% Plans submittal. This drawing must be included in the final bridge plans.

Modification for Non-Conventional Projects:
Delete ***SDM*** 8.1.B and insert the following: B. This drawing is prepared by the Drainage Engineer of Record and shall be included in the earliest foundation component submittal and the final bridge plans.

C. For a typical drawing, see ***PPM Exhibit BHD-1***.

8.2 GENERAL REQUIREMENTS AND DESIGN PROCEDURES

For General Requirements and Design Procedures involving the Bridge Hydraulics Recommendation Sheet, permits and other hydraulic considerations and requirements, see Chapter 27 of the ***PPM*** and the FDOT ***Drainage Manual***.

9 CONSTRUCTION SEQUENCE FOR BRIDGE WIDENING AND PHASED CONSTRUCTION

9.1 GENERAL

A. The purpose of the Construction Sequence sheets is to show the proposed sequence of bridge construction as well as the maintenance of traffic during bridge widening and/or phased bridge construction.

B. Construction Sequence sheets are a supplement to the Traffic Control Plan (TCP). Ensure that dimensions and phasing, including phase naming conventions, are consistent between the two sets.

C. Provide separate Construction Sequence details for each unique combination of proposed and existing cross sections and superstructure types. Include representative substructure types as required to fully depict individual phases. Show all phases of construction beginning with the existing condition and finishing with the completed proposed section. Show all cross sections looking up station.

D. Check for dimensional consistency between the Construction Sequence sheets and all related construction phasing shown elsewhere in the structures plans.

E. For examples illustrating the content and format of completed Construction Sequence sheets, see the ***Structures Detailing Manual Examples***.

9.2 CONSTRUCTION SEQUENCE DRAWINGS

At a minimum, include the following in the Construction Sequence sheets:

A. Existing bridge deck cross section(s), superstructure(s) and substructure(s). The first phase in the sequence is the existing bridge deck cross section. Show all existing elements as dashed.

B. Completed proposed bridge typical section(s), superstructures(s) and substructure(s). The final phase in the sequence is the completed proposed bridge typical section. Show all proposed elements as solid.

C. Direction of traffic for all lanes. Indicate traffic traveling up station with an upward pointing arrow and down station with a downward pointing arrow.

D. Dimensions for permanent traffic and pedestrian railings, temporary barriers including minimum clear distances to above ground hazards or drop-offs, shoulders, traffic lanes, bike lanes, median width, sidewalks, and construction and demolition limits at each phase. Reference dimensions to Station Line. Use the same Station Line as used in the Plan and Elevation sheet unless other considerations make this impractical.

E. Indicate required Type K Temporary Concrete Barrier connection to deck, e.g., freestanding or bolted down. See ***Design Standards*** Index 414 for more information and anchoring requirements.

F. Location and disposition of all bridge-mounted utilities during construction and at the final condition. Indicate the type of utility, e.g., FOC, SS, OE, etc. For a complete list of common abbreviations, see ***Design Standards*** Index 001. Wherever possible, indicate nominal dimensions of conduit or pipe.

G. Locations of the deck and substructure cut lines and construction joints. Include location in dimension scheme such that the locations are tied to the Station Line. Use hatching or shading to indicate portion of structure to be demolished in each phase.

H. Phase construction labels. Label each phase of construction as "Phase I Demolition", "Phase II Construction", etc. with the relevant dimension for the limit of construction and/or demolition. Coordinate with and use same naming conventions as the TCP.

I. Cross slope of bridge deck. Indicate whether or not the proposed cross slope matches the existing cross slope. If not, indicate both existing and proposed cross slopes.

J. Right-of-way (ROW) lines. Include Temporary Construction Easements (TCE). Show dimensions from these limits to the limits of construction and to temporary work bridges or platforms.

K. Temporary and permanent walls required for phased construction.

9.3 CONSTRUCTION SEQUENCING CONSIDERATIONS

Coordinate and balance constructability, safety, economy and traffic control when developing the construction sequence for a phase-constructed bridge. Observe the following guidelines when developing the construction sequence:

A. Be familiar with the space required for each construction activity and ensure that there is enough room between the limits of construction and adjacent ROW lines, TCE lines and live traffic.

B. Be aware of the traffic control devices that may be required in the TCP. Account for widths of temporary barriers, traffic drums, barricades, etc. where their dimensions could affect the limits of construction.

C. Maximize the work area where possible and place as much distance as practicable between construction personnel and traffic. Where construction activities will be directly behind a temporary barrier, traffic drum or barricade, try to limit the duration of the phase through practical methods applied in the plans.

D. Consider bolting or pinning-down Type K Temporary Concrete Barriers to minimize the required clear distance behind the barrier and maximize lane and shoulder width. See ***Design Standards*** Index 414 for more information and anchoring requirements.

E. Coordinate pile driving operations and other foundation activities such that driving leads do not interfere with traffic on the bridge. Be aware of undesirable effects associated with pile driving such as diesel overspray from the hammer or debris from the pile cushion finding its way into live traffic.

F. Consider hammer location when battered piles are required. Avoid phasing where battered piles will be driven from above live traffic or near occupied structures or overhead utilities.

G. Properly address drainage and runoff conditions during construction. Coordinate with roadway and drainage engineers at the earliest stages of the design phase to properly incorporate safe drainage design into the construction sequence.

H. When phasing requires the use of temporary walls, in general use temporary MSE walls for fill conditions and sheet pile walls for cut conditions. If the plans call for a temporary critical sheet pile wall, include a table in the plans showing all design parameters.

I. When existing bridge decks are being removed from existing beams or girders in phases, address the sequence of removal to accommodate differential deflections and to reduce distortions within and between adjacent beams and girders. Consider selectively removing or cutting cross frames on steel I-girder superstructures, and intermediate diaphragms on concrete beam superstructures, prior to deck removal to accomplish this.

J. See also other ***SDM*** chapters for specific phase construction requirements and considerations associated with pile driving, steel erection and deck casting.

K. The Construction Sequence sheets shall provide sufficient information to confirm that the proposed bridge is constructible as designed. Include dimensions to R/W lines, TCE lines, existing structures, proposed structures and any other object that will aid the contractor in constructing the project. Show all potential conflicts graphically if applicable. See Figure 9.3-1 for typical dimensions.

Figure 9.3-1 Typical Dimensions Required for Construction Sequence Drawings

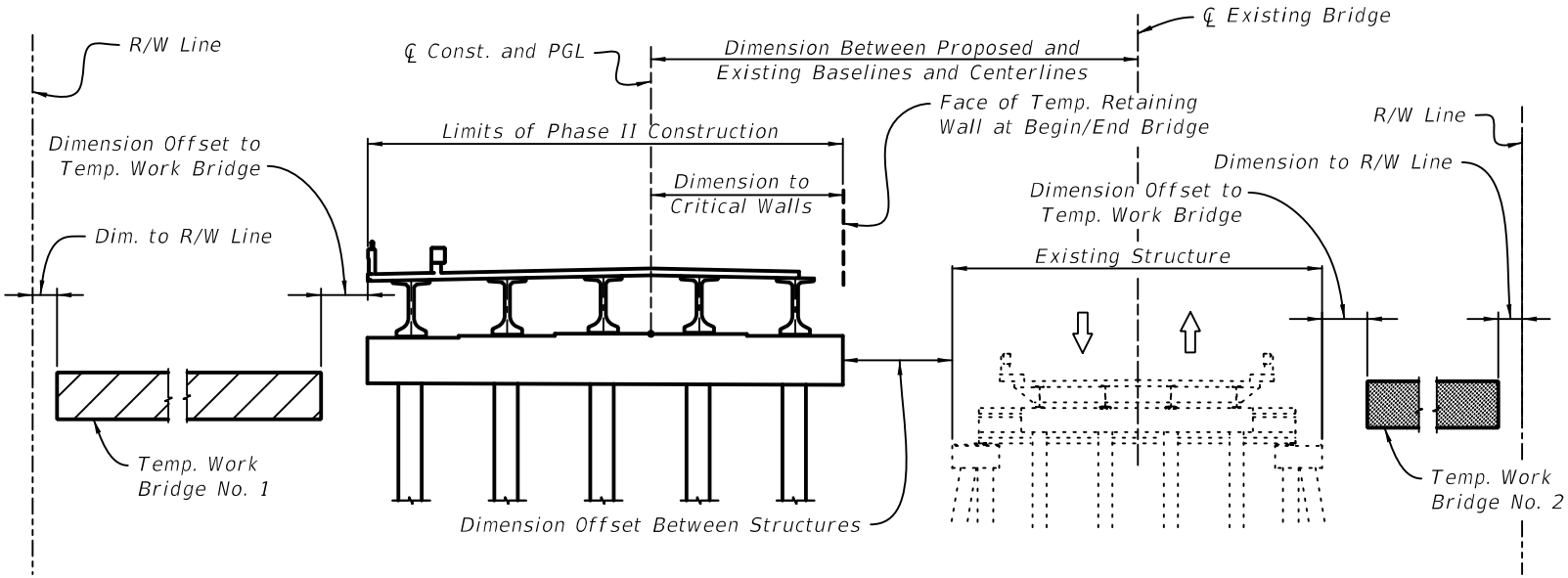

TYPICAL DIMENSIONS REQUIRED FOR CONSTRUCTION SEQUENCE DRAWINGS

10 REPORT OF CORE BORINGS

10.1 GENERAL

A. This drawing, prepared by the District Geotechnical Engineer or a Consultant Geotechnical Firm, is a graphic portrayal of the subsurface conditions at the project site.

Modification for Non-Conventional Projects:
Delete ***SDM*** 10.1.A and insert the following: A. This drawing, prepared by the Geotechnical Foundation Design Engineer of Record, is a graphic portrayal of the subsurface conditions at the project site.

B. The information presented on this drawing and in the Geotechnical Report is used to arrive at a proper foundation design.

C. These drawings shall be placed on the correct border found in the Structures Bar Menu.

10.2 SCALES

A. Draw the boring layout plan and boring logs in elevation to a scale large enough to legibly show the data and permit reasonable determination and interpretation of soil strata variations.

B. The vertical scale of the boring logs must be large enough to permit inclusion of all relevant boring data and need not be the same scale as the boring layout.

C. Selected scales must provide uncompromised legibility when reproduced to 11-inch x 17-inch prints.

10.3 DRAWING CONTENT

Include the following data on the Report of Core Boring sheet(s):

A. Plan View (Boring Layout):

1. Station Line (show station values at 100-foot increments)
2. Station Line label (Base Line Survey, Center Line Construction, etc.)
3. North Arrow
4. Begin and end bridge stations and labels
5. Boring locations referenced to station line by station and offset
6. Boring labels

B. Elevation View (Boring Logs):

1. Elevation reference (vertical scale) on both left and right side of sheet (borings must be plotted in reference to elevation, not depth below ground surface)
2. Boring plots, labels, stations, offsets. (Use the soil-type symbols specified in the current ***Soils and Foundations Handbook***)
3. Ground surface elevation
4. Ground/surface water level and date recorded (note elevation of artesian head if encountered)
5. Strata description including Unified Classification Symbols
6. Standard Penetration Test (SPT) N-values
7. Rock Core Locations,% recoveries, RQD
8. Undisturbed soil sampling locations
9. Lab test results
10. In situ test locations (vane shear test, dilatometer test, pressure meter test, etc.) and corresponding test results
11. Note unusual circumstances such as: sudden drop of split spoon, loss of circulation, etc.

C. Other:

1. Soil Legend
2. Rig Type
3. SPT Hammer Type (Safety Hammer or Automatic Hammer)
4. Environmental Classification (superstructure, substructure)
5. Financial Project ID
6. Completed Title Block

10.4 TITLE BLOCK

A. The title of this drawing is "REPORT OF CORE BORINGS".

B. Show the names of the drillers who performed the borings, and the responsible Geotechnical Engineer.

11 FOUNDATION LAYOUT

11.1 GENERAL

A. This drawing shows a plan view of all spread footings, piling or drilled shafts and provides all information necessary for locating their positions in the field.

B. Use the same orientation as is shown on the Plan and Elevation sheets.

C. For examples illustrating the content and format of completed Foundation Layout sheets, see the ***Structures Detailing Manual Examples***.

11.2 FOUNDATION LAYOUT DRAWING

At a minimum, include the following on the Foundation Layout sheets:

A. Station Line at the scale required for clarity. Use the same Station Line referenced in the Plan and Elevation sheet.

B. Direction of stationing adjacent to the Station Line preferably at the extreme ahead or back station.

C. A plan of the substructure foundations such as a dashed outline of footings, bent caps, etc. Show substructure outline when considered critical for construction.

D. All horizontal curve data (or reference if shown elsewhere) including bearings of tangents.

E. Substructure stations on the Station Line. The substructure station is the intersection of the Station Line and the intermediate substructure centerline or begin/end of bridge at the front face of backwall (FFBW). For end bents, dimension the distance between FFBW and the centerline of piles.

F. On the Station Line, show the angle between intersecting reference lines.

   1. For bridges with straight (tangent) alignment, show the skew angle.
   2. For bridges with a single horizontal curve, show the angle between the substructure centerline or FFBW and the tangent to the station line at the intersection point.
   3. For bridges with multiple horizontal curves, combination of horizontal curve(s) and tangent(s), spiral curve(s), multiple consecutive tangents without horizontal curves or other complex alignments, show the angle between the substructure centerline or FFBW and the tangent to the station line at the intersection point and use coordinates to locate working (control) points for the substructure along the centerline of intermediate supports (piers or bents) or FFBW. Tie coordinates to the Florida State Plane Coordinate System.

G. The distance between the working (control) point or intersection point and adjacent pile or drilled shaft clusters, the center of footings, drilled shafts, or individual piles. In addition:

   1. Other foundation units may be dimensioned from adjacent foundations.
   2. Dimension pile or drilled shaft spacing within a cluster.
   3. Show proposed footing outlines as dashed where required for clarity.

H. All overhead and buried utilities and existing foundations in the vicinity and offset dimensions if applicable. Also indicate status of utilities, e.g. proposed, placed out of service, to be relocated, etc.

I. Boring locations and labels.

J. Show test, production, existing and tension piles or drilled shafts using a unique symbol for each. Use a legend to define these symbols. Exaggerate pile or drilled shaft sizes when necessary for clarity.

K. Show pile or drilled shaft sizes.

L. Indicate the amount and direction of battered piling. Indicate the control point for battered piles as the intersection of the center of pile and the bottom of footer or bottom of bent cap. All related dimensions shall reference this point.

M. Pile or shaft numbers. Number piles or shafts in each substructure unit sequentially, beginning with "1" from left to right when facing the Direction of Stationing, then from extreme back station to extreme ahead station. Restart numbering at each substructure unit. This numbering scheme is not to be confused with the pile driving or shaft construction sequence. See ***Specifications*** Section 455 for more information.

N. Indicate piles or drilled shafts that are to be wrapped with polyethylene sheeting per ***Specifications*** Section 459.

O. Location of temporary critical walls in the immediate vicinity of foundation construction and/or phased construction. Indicate wall type. Reference the appropriate sheets for wall control drawings and details.

P. Sequence of construction limits. Indicate which portions of the foundation are to be constructed in each Phase of the construction sequence, if applicable.

Q. Location and detail of existing and proposed foundations in the vicinity. This includes sign structure supports, retaining walls, tie backs or any other feature that may pose a potential conflict. To the extent possible, dimension existing foundations (including relic foundations of previously removed bridges) and indicate their distance from known reference points such as proposed foundations, station lines, etc. Clearly indicate existing piles that may conflict with proposed foundation elements (accounting for placement and batter tolerances) that need to be removed. Be aware of mud seal slabs which are typically larger than footing dimensions. Coordinate with the appropriate permitting agencies for direction on the removal of foundation elements, disposal of spoil, etc. In general, it is preferable to be conservative when estimating potential conflicts.

R. North arrow, in upper right corner of sheet.

S. Right-of-way lines (roadway, railroad, etc.) and temporary and permanent easements.

T. Fender system piles.

U. Shoreline at MHW/NHW elevation.

V. Cofferdam locations. Show sheeting required to build cofferdams.

W. Existing buried sheet pile wall anchors.

11.3 FOUNDATION LAYOUT DESIGN CONSIDERATIONS

To ensure a constructible, economical foundation design, incorporate the following guidelines when developing the foundation layout sheets:

A. Be aware of potential conflicts and/or vibration impacts on existing buildings due to foundation installation operations. For example, ophthalmologists (eye doctors), hospitals, schools, research facilities may all be negatively affected by even slight vibrations caused by foundation installation operations.

B. Test piles shall be driven in Phase I for phased-constructed bridges where possible.

Modification for Non-Conventional Projects:
Delete ***SDM*** 11.3.B.

C. Ensure that there is sufficient overhead clearance to drive piles. Possible conflicts include overhead utilities, existing bridges and flight glide paths for bridges near airports.

D. It is strongly advised that all critical utilities be identified using Vvh (verified vertical elevation and horizontal location) methods during the design phase. Coordinate with the District Utility Engineer for determining which utilities are considered critical.

Modification for Non-Conventional Projects:
Delete ***SDM*** 11.3.D and see the RFP for identification of critical utilities.

E. Additional requirements may be placed on the removal of existing foundations, excavation, transportation and disposal of contaminated materials by permitting agencies. Foundation layout plans, including removal of existing structures, disposal of spoil, disturbing environmentally sensitive areas, etc., must adhere to all permit requirements. This is especially important in the case of existing bascule piers with mud-line foundations that may need to be completely removed to facilitate the placement of a fender system, future dredging or channel pier foundation construction.

F. Investigate adjacent structures, including buildings, for possible deep foundation conflicts. Consider the possibility of existing battered piles obstructing the proposed bridge foundation. Retaining walls, tie backs and dead man anchors pose potential conflicts and should be considered during the design phase.

G. Also see the ***Soils and Foundations Handbook*** for additional information.

11.4 PILE DATA TABLE

The pile data table cells are located in the Structures Bar Menu in CADD and are shown in ***Instructions for Design Standards (IDS)*** Indexes 20600 and 21600. Complete the appropriate table and include it in the plans when using standard concrete piles as shown in the Design Standards and when using steel pipe or H piles. Do not add or delete columns within the Installation Criteria or Design Criteria sections of the table; if information in the column is not pertinent to the project, populate the data cell with "N/A". What follows is a column-by-column description of the information to be used when filling out the data table. For additional information, see ***SDG*** 3.5. See also, ***IDS*** 20600 when using standard prestressed concrete piles.

A. Pier or Bent Number: Indicate in which pier or bent the piles are located. For pile groups within a single substructure unit that have different criteria, designate different pile groups in this column.

B. Pile Size: Indicate the pile size and type that is being used, e.g. 24" Sq. Prestr. Conc., HP 14x73, 48" Ø Pipe. Show all dimensions in inches. See ***Design Standards*** for standard Prestressed Concrete Pile sizes.

C. Nominal Bearing Resistance: See Eq. 3.1 in ***SDG*** 3.5.

D. Tension Resistance: Indicate the required capacity of the pile to resist uplift in tons.

E. Minimum Tip Elevation: Indicate the minimum tip elevation required for lateral stability or to resist uplift. Round elevations down to the nearest foot. Do not use tenths.

F. Test Pile Length/Pile Order Length: Include the test pile length as provided by the Geotechnical Engineer on projects with test piles. Change “Test Pile Length (ft.)” to “Pile Order Length (ft.)” on the table heading for projects without test piles and include the pile order length as provided by the Geotechnical Engineer.

G. Required Jet Elevation: Indicate the required elevation that the piles shall be jetted to as provided by the Geotechnical Engineer.

H. Required Preform Elevation: Indicate the elevation to which holes will be preformed to as provided by the Geotechnical Engineer.

I. Factored Design Load: Indicate the factored loads calculated during design.

J. Downdrag: Indicate the anticipated downdrag load as provided by the Geotechnical Engineer.

K. Total Scour Resistance: An estimate of the ultimate static side friction resistance provided by the scourable soil, as provided by the Geotechnical Engineer.

L. Net Scour Resistance: An estimate of the ultimate static side friction resistance provided by the soil from required preformed or jetting elevation to the scour elevation, as provided by the Geotechnical Engineer.

M. 100-Year Scour Elevation: Estimated scour elevation due to the 100 year storm event, found on the Bridge Hydraulic Recommendations sheet. Round elevation down to the nearest foot.

N. Design Scour (Temporary Bridges): Estimated scour elevation as provided by the Drainage Engineer. Round elevation down to the nearest foot.

O. Long-Term Scour Elevation: Estimated scour elevation used in design for extreme event loading, found on the Bridge Hydraulic Recommendations sheet. Round elevation down to the nearest foot.

P. Resistance Factor: As provided by the Geotechnical Engineer.

Q. Pile Cut-Off Elevations: Indicate the pile cut-off elevation to the nearest tenth of a foot for permanent bridges or the nearest hundredth of a foot for temporary bridges. Edit Pile Cut-Off Elevation table columns or make a separate table for pile cut-off elevations if necessary.

11.5 DRILLED SHAFT DATA TABLE

The Drilled Shaft Data Table is available on the Structures Office website's Design Standards Webpage, in the Data Table Cell Libraries. The drilled shaft data table shall be used on all projects with drilled shafts. Do not add or delete columns; if information in the column is not pertinent to the project, populate data table with "N/A". What follows is a column by column description of the information to be used when filling out the data table. See ***SDG*** 3.6 for additional information.

A. Pier or Bent Number: Indicate in which pier or bent the shafts are located. For shaft groups within a single substructure unit that have different criteria, designate different shaft groups in this column.

B. Shaft Size: Indicate the shaft diameter in inches. See ***Basis of Estimates Manual*** for commonly available auger sizes.

C. Tip Elevation: The highest elevation the tip of the shaft can be constructed without authorization from the Engineer. As provided by the Geotechnical Engineer, round elevations down to the nearest foot.

D. Minimum Tip Elevation: The highest elevation allowed due to lateral stability. As provided by the Geotechnical Engineer, round elevations down to the nearest foot. Edit note #2 in the cell as required.

E. Minimum Rock Socket Length: Indicate the minimum rock socket length as recommended by the Geotechnical Engineer.

F. Minimum Top of Rock Socket Elevation: As provided by the Geotechnical Engineer, indicate the anticipated elevation of layer in which top of the shaft socket will begin.

G. Factored Design Load: Indicate the factored loads calculated during design. Round loads up to the nearest ton.

H. Factored Design Uplift Load: Indicate the Factored Uplift Loads calculated during design. Round loads up to the nearest ton.

I. Downdrag: Indicate the anticipated downdrag load. As provided by the Geotechnical Engineer, round up to the nearest ton.

J. Long Term Scour Elevation: Estimated scour elevation used in design for extreme event loading, found on the Bridge Hydraulic Recommendations sheet. Round elevation down to the nearest foot.

K. 100-year Scour Elevation: Estimated scour elevation due to the 100 year storm event, found on the Bridge Hydraulic Recommendations sheet. Round elevation down to the nearest foot.

L. Resistance Factor (phi) for Compression: As provided by the Geotechnical Engineer.

M. Resistance Factor (phi) for Uplift: As provided by the Geotechnical Engineer.

N. Consider Nonredundant: See ***SDG*** 3.6.

O. Top of Drilled Shaft Elevation: Indicate the top of shaft elevation to the nearest tenth of a foot. Edit Top of Drilled Shaft Elevation table column or make a separate table for top of drilled shaft elevations if necessary.

Figure 11.5-1 Drilled Shaft Data Table

DRILLED SHAFT DATA TABLE														Table Date 07/01/13
INSTALLATION CRITERIA						DESIGN CRITERIA							TESTING	TOP OF DRILLED SHAFT ELEVATION (Ft.)
PIER OR BENT NO.	SHAFT SIZE (In.)	(1) TIP ELEV. (Ft.)	(2) MIN. TIP ELEV. (Ft.)	MIN. ROCK SOCKET LENGTH (Ft.)	(3) MIN. TOP OF ROCK SOCKET ELEVATION (Ft.)	FACTORED DESIGN LOAD (tons)	FACTORED DESIGN UPLIFT LOAD (tons)	DOWN DRAG (tons)	LONG TERM SCOUR ELEV. (Ft.)	100-YEAR SCOUR ELEV. (Ft.)	Ø COMPRESSION	Ø UPLIFT	(4) CONSIDER NONREDUNDANT	

(1) The Tip Elevation is the highest elevation the shaft tip shall be constructed unless load test data, rock core tests, or other geotechnical test data obtained during pilot holes allows the Engineer to authorize a different Tip Elevation.

(2) The Min. Tip Elevation is the tip elevation required for lateral stability.

(3) Rock encountered above the Min. Top of Rock Elevation is considered unsuitable for inclusion in the rock socket length. The Engineer may revise this elevation based on pilot holes, if performed.

(4) Inspect all shafts considered nonredundant using the SID or an approved alternate down-hole camera to verify shaft bottom cleanliness at the time of concreting. Test all nonredundant drilled shafts using Cross-hole-Sonic Logging (CSL).

Figure 11.5-2 Drilled Shaft Data Table Example

DRILLED SHAFT DATA TABLE														Table Date 07/01/13
INSTALLATION CRITERIA						DESIGN CRITERIA							TESTING	TOP OF DRILLED SHAFT ELEVATION (Ft.)
PIER OR BENT NO.	SHAFT SIZE (In.)	(1) TIP ELEV. (Ft.)	(2) MIN. TIP ELEV. (Ft.)	MIN. ROCK SOCKET LENGTH (Ft.)	(3) MIN. TOP OF ROCK SOCKET ELEVATION (Ft.)	FACTORED DESIGN LOAD (tons)	FACTORED DESIGN UPLIFT LOAD (tons)	DOWN DRAG (tons)	LONG TERM SCOUR ELEV. (Ft.)	100-YEAR SCOUR ELEV. (Ft.)	Ø COMPRESSION	Ø UPLIFT	(4) CONSIDER NONREDUNDANT	
1	48	-80	-80	25	-55	446	N/A	100	-13	-20	0.55	N/A	NO	5.0
2	48	-80	-80	25	-55	446	282	N/A	-13	-20	0.45	0.40	YES	5.0
3	60	-100	-100	N/A	N/A	310	N/A	N/A	-13	-20	0.50	N/A	YES	5.0
4	60	-100	-100	N/A	N/A	514	N/A	N/A	-13	-20	0.60	N/A	NO	5.0

(1) The Tip Elevation is the highest elevation the shaft tip shall be constructed unless load test data, rock core tests, or other geotechnical test data obtained during pilot holes allows the Engineer to authorize a different Tip Elevation.

(2) The Min. Tip Elevation is the tip elevation required for lateral stability.

(3) Rock encountered above the Min. Top of Rock Elevation is considered unsuitable for inclusion in the rock socket length. The Engineer may revise this elevation based on pilot holes, if performed.

(4) Inspect all shafts considered nonredundant using the SID or an approved alternate down-hole camera to verify shaft bottom cleanliness at the time of concreting. Test all nonredundant drilled shafts using Cross-hole-Sonic Logging (CSL).

12 SUBSTRUCTURE - BENTS

12.1 GENERAL

A. This Chapter covers end bents as well as intermediate bents.

B. Bent sheets will include all details necessary for the layout of the bent and bar placement.

C. Show all views of the bent and sections required to construct the bent. For some structures, this may require more details than others.

D. See ***SDM*** Chapter 4 for details related to Concrete Components.

E. For examples illustrating the content and format of completed End Bent sheets, see the ***Structures Detailing Manual Examples***.

12.2 DRAWINGS AND DETAILS - GENERAL

Include the following details on the End Bent or Intermediate Bent sheets, as applicable:

A. Plan and elevation views.

B. With the exception of End Bent 1, elevation views are typically shown looking ahead station. If it is necessary to show the view looking back station, then the view must be labeled accordingly.

C. Dimensions along front face of backwall (FFBW) or centerline cap to Station Line. Dimensions shall be comprehensive to allow for complete layout of the bent. Some duplicate dimensions should be included to assist the contractor in verifying field measurements. Tie all dimensions to the horizontal control line.

D. Direction of Stationing in Plan View.

E. Angle between Station Line and FFBW or centerline cap.

F. Phase construction limits. Indicate the length along the FFBW or centerline cap to be constructed in each phase. Use separate details and sketches where necessary.

G. Existing structure removal limits. Indicate the length along the FFBW or centerline cap to be removed. Hatch existing sections showing removal limits. Use separate details and sketches where necessary or if existing plans are not available. Location of piling is critical in partial removals; therefore it is essential to locate during the design process.

H. Elevations at all locations critical to layout including:

   1. Pedestal/beam seat elevations.
   2. Top of backwall at ends, slope break point and phased construction limits.
   3. Top and bottom of bent cap at ends, slope break point and phased construction limits.

4. Top of cheekwall.
5. Coping elevation at FFBW.
6. Wing wall elevations at similar locations.

When a single drawing, view or detail showing elevations is used for more than one bent, elevations may be tabulated if necessary for clarity.

I. Beam/girder centerlines. Indicate beam/girder number on each centerline. Indicate the acute angle between the beam centerline and the centerline of bearing for each beam or show as "Typical". For bridges with horizontally curved geometry, indicate the beam angle with respect to a line tangent to the curve at the intersection of centerline of bearing. Dimension beam spacing with respect to the bent cap and label as "Beam Spacing".

J. Pile or drilled shaft locations. Dimension pile or drilled shaft spacing with respect to the bent cap and label as "Pile/Drilled Shaft Spacing". Indicate pile batter. For battered piles, indicate where the cutoff elevation is given to, e.g., centerline of pile.

K. Pedestal / stepped cap spacing and dimensions. Dimension pedestal / stepped cap spacing with respect to the bent cap.

L. Centerline(s) of bearing and centerline of piles / drilled shafts. Dimension offset from centerline cap or FFBW and the centerlines if not coincident.

M. Pedestal details including reinforcement, concrete cover, preformed anchor bolt or rod blockout locations & reinforcement embedment. Ensure that pedestal steel and preformed anchor bolt or rod blockouts do not conflict with top reinforcement in bent cap.

N. Plan view of drilled shaft reinforcement. Detail how drilled shaft reinforcement will tie into bent cap reinforcement.

O. Utility and drainage details. If a utility or drain pipe passes through end bent backwall, show reinforcement scheme and include bars in reinforcing schedule.

P. Connection details for widenings. Indicate whether existing steel is to be lapped with new steel or if threaded couplers or drilling and doweling are required. Include detail for drill and dowel to replace damaged existing rebar that is to be incorporated into the completed bridge.

Q. Keyways and construction joints. Show keyways and construction joints between backwall and bent cap, at ends of cap for phased construction and anywhere else required.

R. Preformed anchor bolt or rod blockout locations. Preformed anchor bolt or rod blockouts shall be 4-inch diameter minimum. Completely detail blockouts and verify there are no conflicts with reinforcement.

12.3 DRAWINGS AND DETAILS - END BENT

In addition to the applicable detailing recommendations above, show the following when detailing End Bent sheets:

A. End bent plan and elevation views. It is generally preferred to show plan and elevation views for each end bent on a separate sheet, even if there is a great deal of similarity.

B. Begin and End bridge stations at intersection of FFBW and Station Line. Tie all dimensions back to the PGL and the Station Line when it is within the limits of the bent. Show a dimension to the Station Line when it is not within the limits of the bent.

C. Outline of approach slab in elevation view.

D. Section of end bent. Include the backwall, where applicable, and include enough information for layout and bar placement. More than one section may be needed. Indicate location where all sections are taken on the end bent plan and elevation sheets.

E. Cheekwall detail showing reinforcing details. Up to four views may be required for skewed bridges and bridges with other conditions due to varying dimensions.

F. Location(s) of soil reinforcement (if present) attached to or placed against the backwall. Indicate the required service and factored loads (kips per foot along the length of the backwall) for the soil reinforcement See also ***SDG*** 3.13.2.M. If soil reinforcement attached to or placed against the backwall is used, include the following plan note on the end bent sheet(s):

> The soil reinforcement [attached to / placed against] the backwall shall be designed by a Specialty Engineer for the service and factored loads as shown using the design criteria for permanent MSE walls. Cost of furnishing and installing the soil reinforcement is considered incidental to the cost of the end bent.

*Commentary: Lateral forces and overturning moments at end bents may be resisted by soil reinforcement attached to or placed against backwalls, moment connections between the piles/drilled shafts and the end bent cap (pile embedment must be more than 1 foot), and/or frame action within the end bent itself if pile/drilled shaft supported wingwalls are used. Per the **SDG**, when MSE walls are used at end bents, soil reinforcement attached to or placed against backwalls is required to be used to resist lateral forces and/or overturning moments if analysis shows it is necessary. Soil reinforcement attached to or placed against backwalls is generally not required for other end bents supporting shallow depth superstructures and most other end bents with pile/drilled shaft supported wingwalls. When evaluating the potential need to use soil reinforcement attached to or placed against backwalls, consider all the dead loads applied to the end bent including a portion of the dead load of the approach slab per IDS 20900 and 20910.*

G. Show adjacent MSE walls in the plan and end bent section views. Ensure there are no conflicts between battered piles and MSE wall straps or MSE wall panels.

H. Wing wall details. Wing wall plan, side view and section should be shown. Detail wing wall cap level.

I. Corner chamfers if a chamfer larger than ¾" is necessary. On bents with skews greater than 30 degrees, chamfer acute corners a minimum of 4".

J. For the dowels that extend from the top of the backwall or cap and into the approach slab, use hairpin shaped bars as shown in Figure 12.3-1 in lieu of straight dowels.

Figure 12.3-1 End Bent Dowel Bar Detail

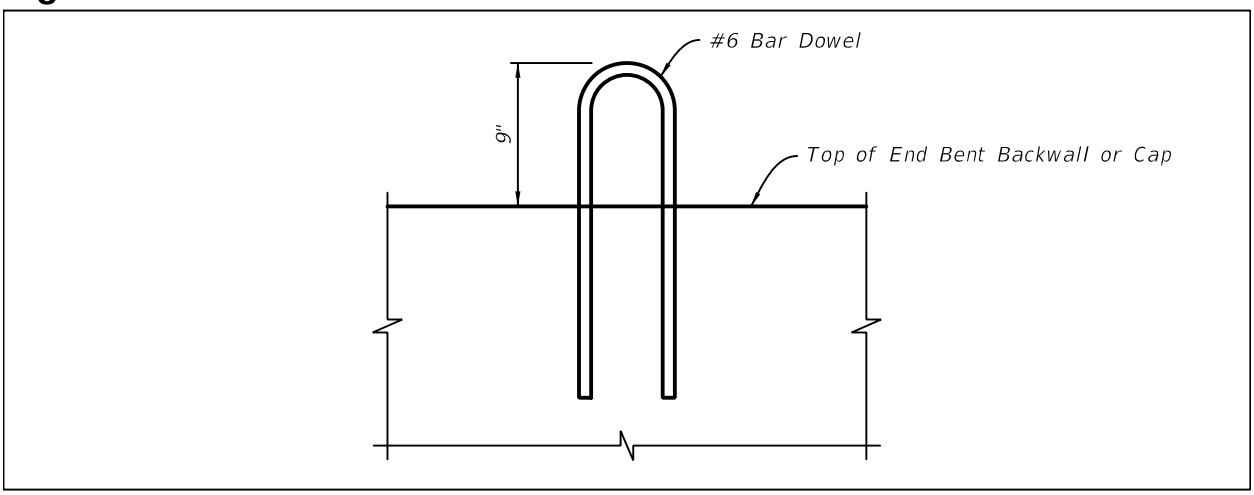

12.4 DRAWINGS AND DETAILS - INTERMEDIATE BENT

In addition to the applicable detailing recommendations in ***SDM*** 12.2 above, address the following issues when detailing Intermediate Bent sheets:

A. Plan and elevation views. It is generally allowed to show a single intermediate bent sheet provided there is adequate similarity from bent to bent and enough room on the sheet for legibility.

B. Pedestal details. Pedestals may be staggered to accommodate beams having skewed ends. For staggered pedestals, center the pedestal about the intersection of the centerline of beam and centerline bearing.

12.5 DESIGN CONSIDERATIONS - GENERAL

Constructability, site concerns, economy and durability must be taken into account when developing bent plans and details. The following considerations provide guidelines for the designer and detailer:

A. Make sure the dimensions of the bent are compatible with the bearing pad selection and skew. Place bearing pads orthogonal to the centerline of the beam wherever possible except where specifically shown to be skewed on the ***Design Standards***.

B. If loads and soil conditions permit, place beams directly over piles. Minimize the offset distance between the centerline of piles and centerline(s) of bearing.

C. Avoid double stirrups whenever possible by using a larger stirrup size and/or tighter stirrup spacing. Due to restrictions on bending during fabrication, #6 bars are generally the largest practical stirrup size. Keep stirrup spacing constant between piles. If triple stirrups are required, increase bent cap size.

D. See ***SDG*** 3.11.4 for pedestal requirements.

E. Where beams with squared ends are on a skew and the bearing seat is stepped, detail bearing pedestals in-line with the beams as shown in Figure 12.5-5. Maintain a clear distance from the bent edge to the bearing as indicated in Figure 12.5-2 and Figure 12.5-5.

F. Size bent caps to accommodate pile driving tolerances, drilled shaft placement tolerances, bearing pad requirements, superstructure expansion joints or any other consideration that affects bent cap width. Generally, on bents with double bearings the bearing dimension requirements will control. For bents with large piles or drilled shafts, the shaft or pile dimension plus tolerances will control. See Figure 12.5-1 and Figure 12.5-3.

G. Where bents are supported by drilled shafts without footings, place drilled shafts as follows:

1. Land Bents - set top of drilled shafts 1 foot below ground line.
2. Water Bents - set top of drilled shafts a minimum of 1 foot above normal or mean high water except for bridges over flood plains.
3. Floodplain Bents - set top of drilled shafts a minimum of 1 foot above the 100 year flood elevation and include an optional construction joint 1 foot below ground line.

Cap and/or column dimensions shall accommodate shaft placement tolerances.

Commentary: The water elevation that will actually be present when the bridge is built cannot be determined during the design phase. By setting the top of drilled shaft elevation 1 foot above the 100 year flood elevation, the drilled shaft can be constructed with the water at any elevation below the 100 year flood elevation. Conversely, if the top of drilled shaft elevation is set below the 100 year flood elevation and the water happens to be high during construction, a claim situation is potentially created.

If the actual water elevation that is present during construction is below the 100 year flood elevation, the Contractor can potentially use the construction joint at the lower elevation to construct the drilled shaft without creating a claim situation or having to develop and get an alternate design approved.

H. For multi-span bridges, only bents adjacent to a lower roadway or railroad may need to be skewed to meet horizontal clearance requirements. Similarly, only bents adjacent to a navigation channel may need to be skewed to meet minimum navigation channel width requirements. Consider making remaining bents normal to the bridge. For water crossings continue to use skews where minimum navigational requirements or scour governs the design.

I. When pedestals are used and the bent cap width is controlled by bearing size and/or placement as shown in Figure 12.5-1, Figure 12.5-2 or Figure 12.5-5, extend the pedestals the full width of the cap.

Figure 12.5-1 Minimum Cap Width for Caps with Double Bearings 1 of 2

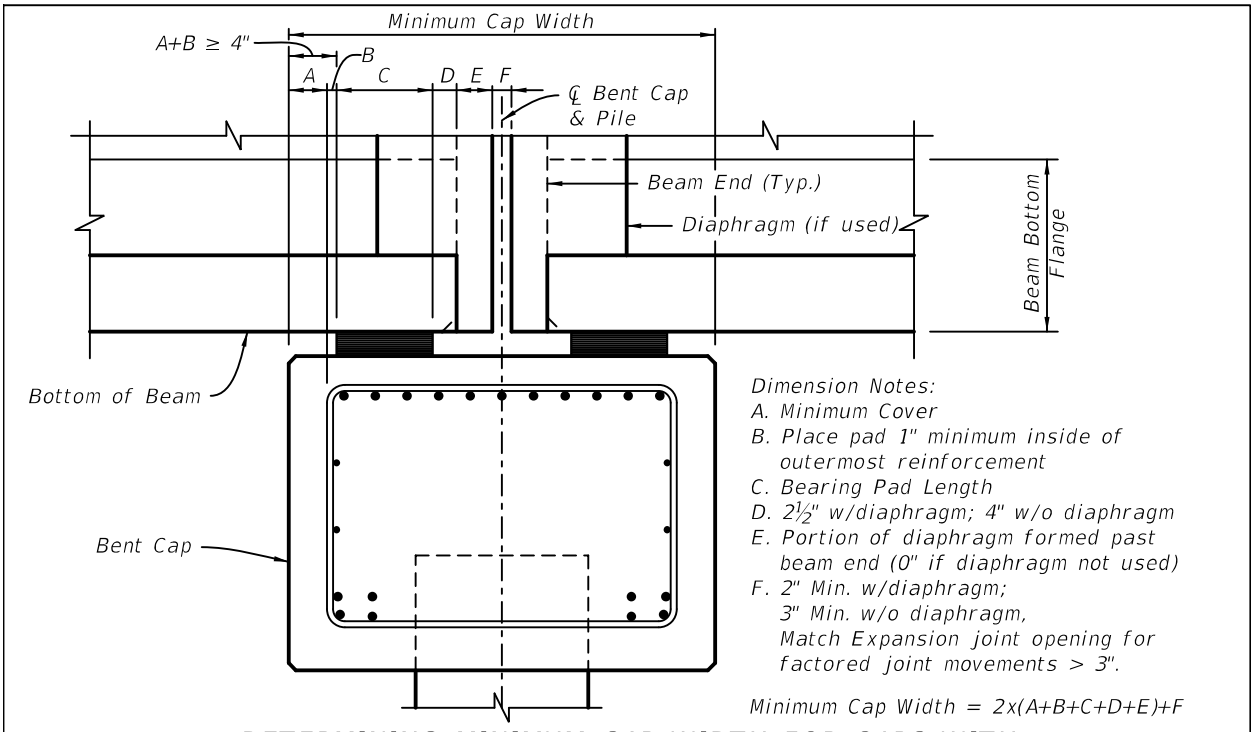

DETERMINING MINIMUM CAP WIDTH FOR CAPS WITH DOUBLE BEARINGS PLACED PARALLEL TO EDGE OF CAP

Figure 12.5-2 Minimum Cap Width for Caps with Double Bearings 2 of 2

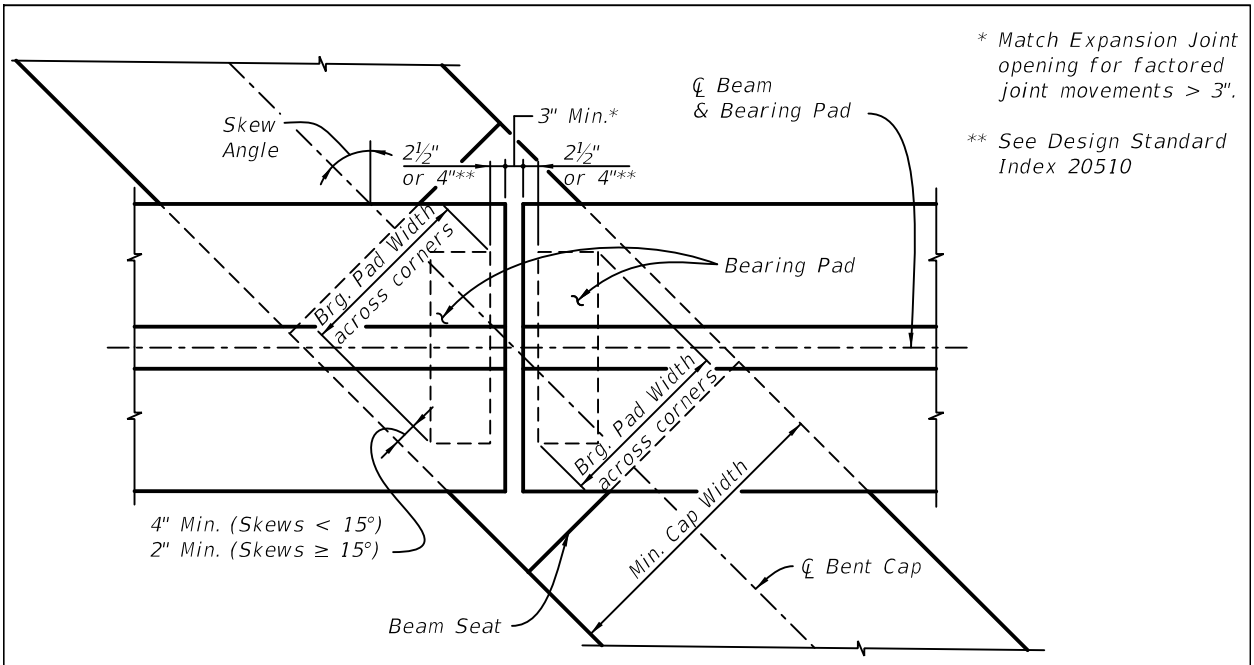

MINIMUM CAP WIDTH FOR CAPS WITH DOUBLE BEARINGS ON A SKEW

Figure 12.5-3 Minimum Cap Width When Pile Size Controls

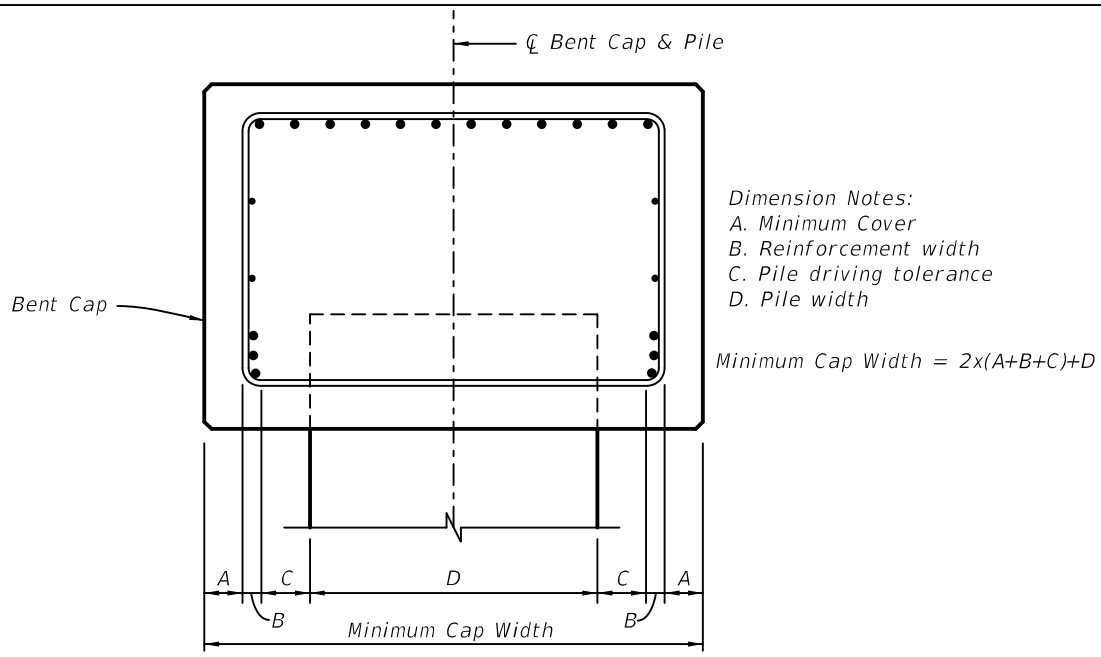

DETERMINING MINIMUM CAP WIDTH WHEN PILE SIZE CONTROLS

Figure 12.5-4 Minimum Cap Width When Shaft Size Controls

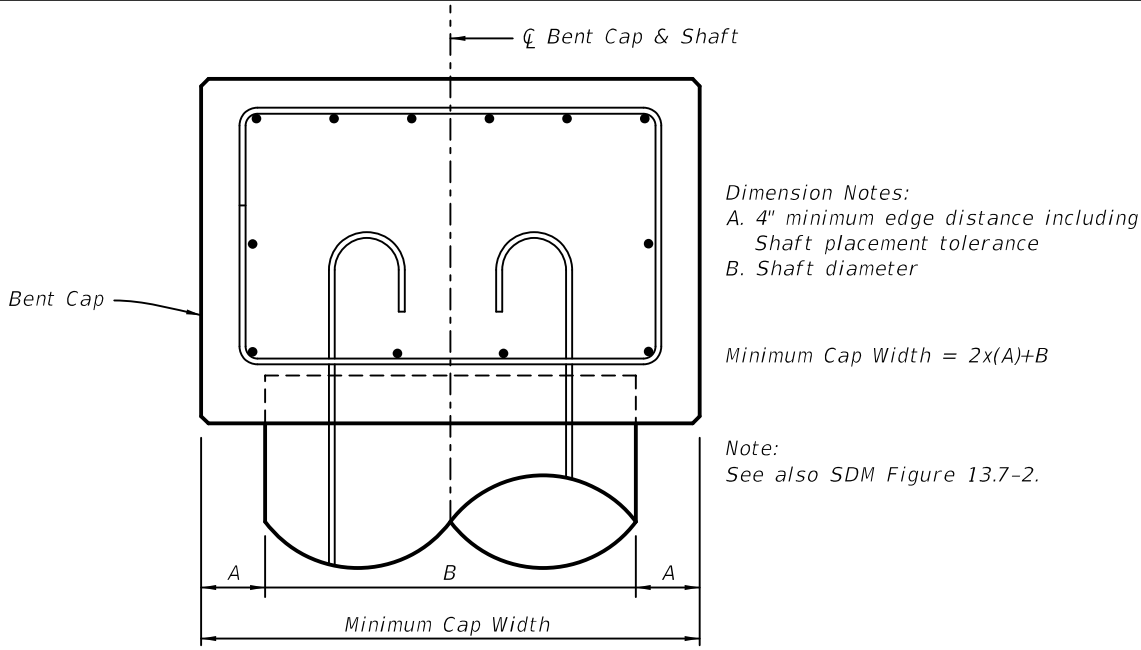

DETERMINING MINIMUM CAP WIDTH WHEN SHAFT SIZE CONTROLS

Figure 12.5-5 Stepped Pedestal Detail for Squared End Beams on a Skewed Bridge

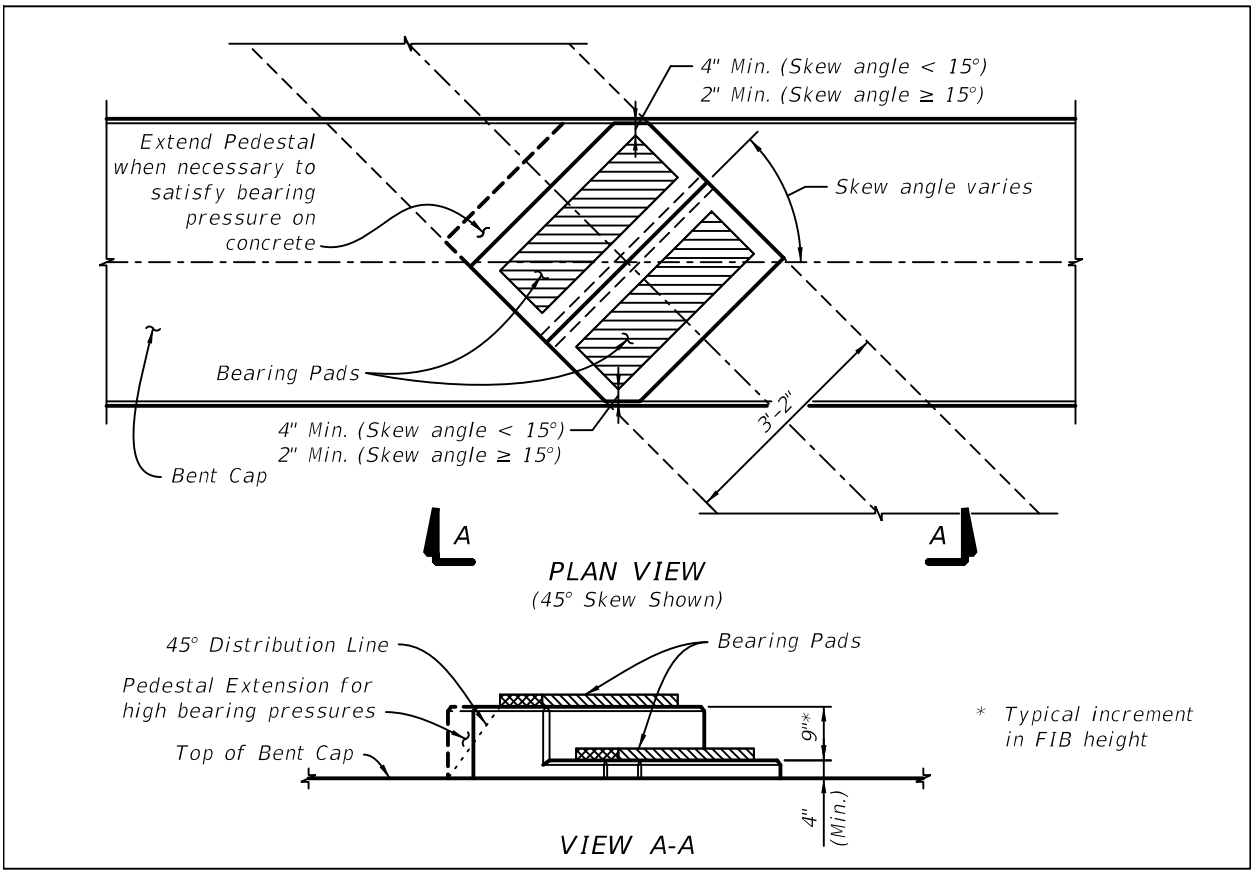

12.6 DESIGN CONSIDERATIONS - END BENT

In addition to the applicable design considerations above, address the following issues when designing end bents:

A. When calculating elevations, allow for a minimum of 2" and a maximum of 4” of clearance between the top of cheekwall and bottom of deck.

B. Minimum thickness for cheekwalls is generally 8". Backwalls and wingwalls are generally no less than 12" thick and may be thicker as required by design. When wingwalls are present on an end bent, make cheekwalls flush with wingwalls so that the outside surface is one continuous plane.

C. For end bents with backwalls greater than 50 feet in length, require vertical ¾" V-grooves in both faces of backwall at a maximum of every 25 feet. Require Type D-5 geotextile fabric behind backwall at all V-groove locations. See Figure 12.6-1.

Figure 12.6-1 End Bent Backwall V-Groove Detail

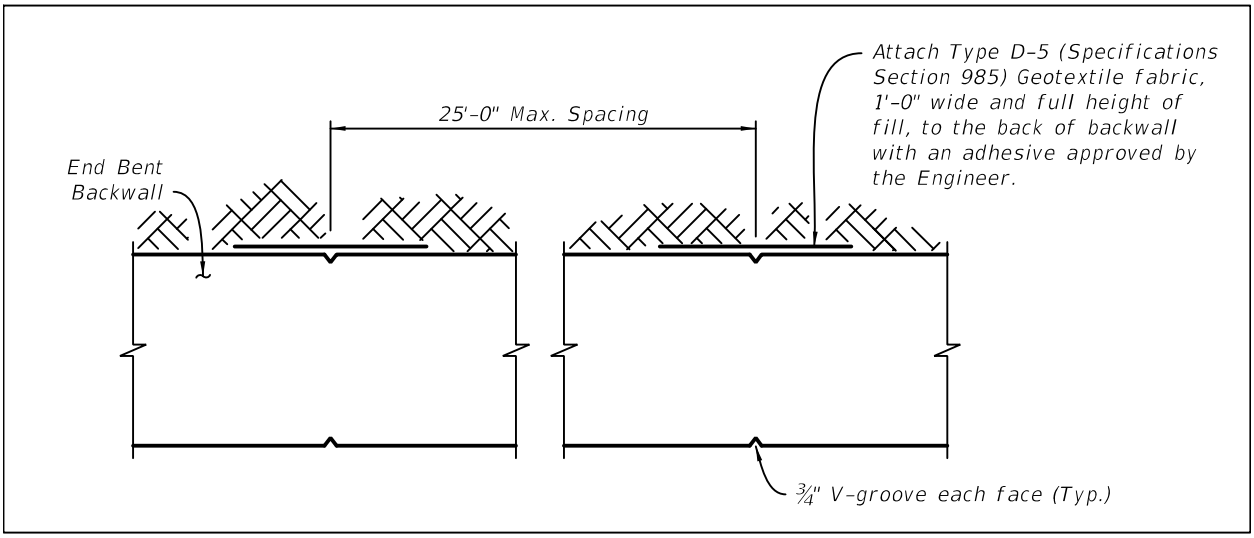

D. Consideration should be given to the possible need for future utilities to pass through end bent backwalls. In some instances, it may be beneficial to construct the backwall with openings intended for future use. In these cases, casting threaded inserts in the underside of the deck for future utility hangers would also be required. Design loads shall include these future utilities.

Modification for Non-Conventional Projects:
Delete ***SDM*** 12.6.D and see the RFP for requirements.

E. For end bents built in conjunction with MSE walls, detail the bottom of the MSE wall coping to be flush with the bottom of the end bent cheekwall and bent cap. Place a ½" thick minimum bond breaker between the retaining wall, e.g. MSE wall panels, sheet piles, C.I.P. wall facing, etc., and the adjacent C.I.P. end bent cap, backwall and cheekwalls so as to accommodate differential settlement between the wall and end bent. See Figure 12.6-2.

Figure 12.6-2 End Bent Cheekwall Detail at MSE Wall

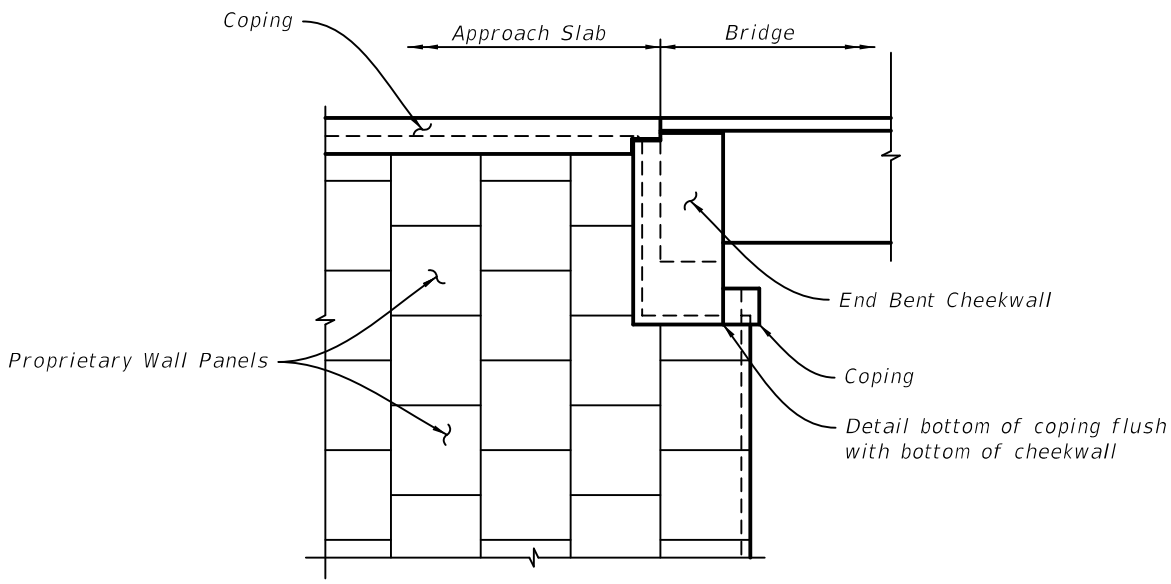

END BENT DETAILS AT RETAINING WALLS
(MSE wall shown, other wall types similar)

F. Due to the differential settlement that will occur between the approach embankment and the end bent, do not use spread footings to support wingwalls that are attached to pile or drilled shaft supported end bents. Generally, wingwalls longer than 10' must be supported by piles or drilled shafts. Design shorter wingwalls as cantilevers that are entirely supported by the end bent.

G. Calculate wingwall lengths for non-skewed End Bents as shown in Figure 12.6-3. Calculate wingwall lengths for skewed bridges in a similar manner accounting for the End Bent geometry and the skewed relationship between the front slope and the wingwalls.

H. When both intermediate and end bents are used on a given bridge, or on separate bridges in a given project, where possible use the same cross sectional dimensions for the bent caps and other applicable details for both bent types.

I. Provide a 3" minimum gap between the front face of backwall and the ends of concrete beams and steel girders.

Figure 12.6-3 Wingwall Calculation Detail

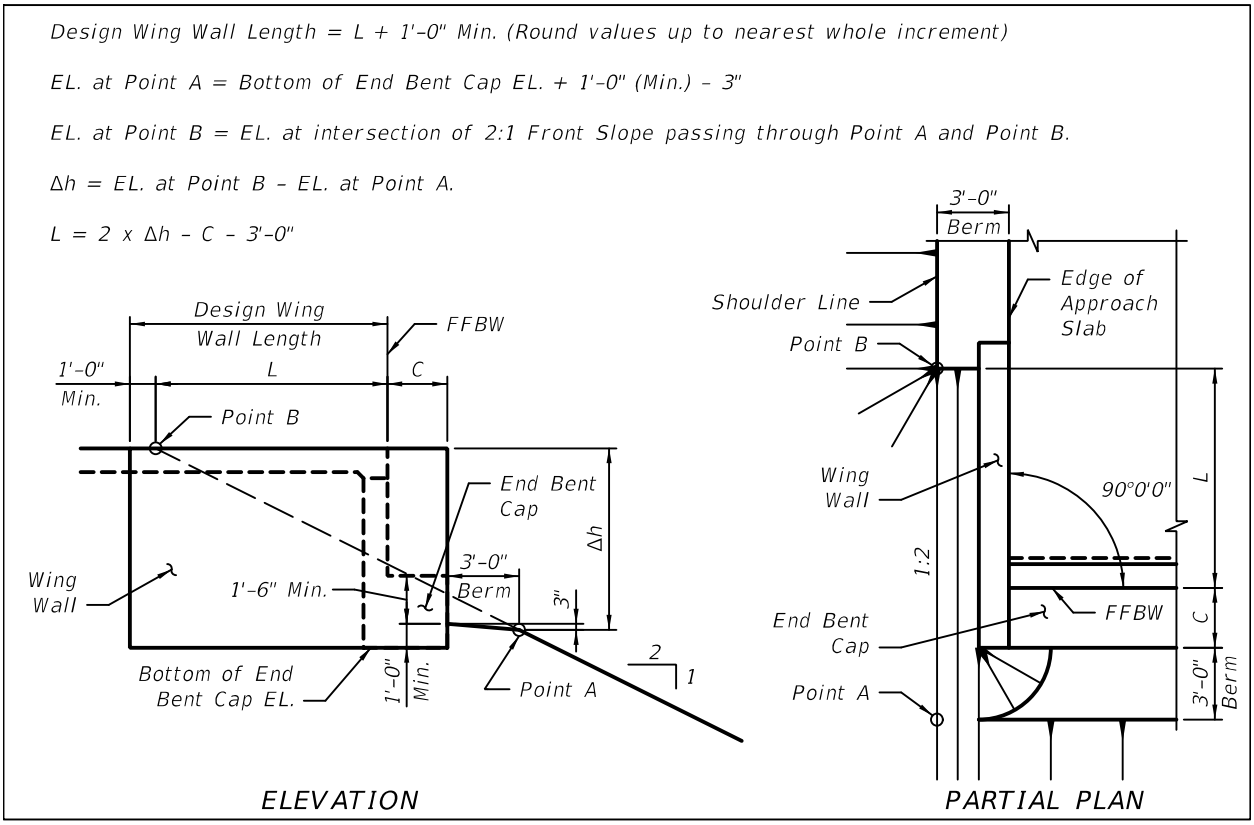

12.7 DESIGN CONSIDERATIONS - INTERMEDIATE BENT

In addition to the applicable design considerations in ***SDM*** 12.5 above, address the following issues when designing intermediate bents:

A. During the preliminary design phase of water crossings, avoid placing intermediate bents in the center of the channel. This may help avoid scour issues and reduce pile lengths. Coordinate with the drainage engineer to achieve a good balance between span lengths and minimizing hydraulic issues.

Modification for Non-Conventional Projects:
Delete ***SDM*** 12.7.A and see the RFP for requirements.

B. To help reduce costs and constructability issues, minimize the use of battered piles. Address conflicts battered piles may have with utilities, existing foundations or other underground obstructions.

Modification for Non-Conventional Projects:
Delete ***SDM*** 12.7.B and insert the following: B. Address conflicts battered piles may have with utilities, existing foundations or other underground obstructions.

13 SUBSTRUCTURE - PIERS

13.1 GENERAL

A. This Chapter covers multiple column, hammerhead, integral, straddle and C-piers, footings and aesthetic requirements.

B. Pier sheets will include all details necessary for the layout, reinforcement placement and quantity estimation of the pier column, cap and footing.

Modification for Non-Conventional Projects:
Delete ***SDM*** 13.1.B and insert the following: B. Pier sheets will include all details necessary for the layout and reinforcement placement of the pier column, cap and footing.

C. Show all views of pier and sections required to construct the pier. For some structures, this may require more details than others.

D. See ***SDM*** Chapter 4 for details related to Concrete Components.

E. To allow detailing piers at a more legible scale, detail pier caps, columns and footings for larger piers on separate sheets. Number the sheets in the order the components will be constructed, footings first, followed by columns and finally pier caps.

F. For examples illustrating the content and format of completed Pier sheets, see the ***Structures Detailing Manual Examples***.

13.2 PIER DRAWINGS AND DETAILS - GENERAL

Sections 13.2 through 13.6 cover multi-column piers as well as other specialty types of piers such as Hammerheads, C-piers, straddle piers, integral piers, etc. Design considerations unique to these types of piers are addressed in subsequent sections. At a minimum, include the following on all Pier sheets:

A. Plan and elevation views (front and side).

B. If there is a great deal of similarity, a typical pier sheet may be used. Show all differing information such as dimensions, elevations, etc. in tabular format. If a pier is wider than can be shown clearly on one sheet, split the view into multiple sheets, while still maintaining the stacked plan and elevation format. Show matchlines on each sheet.

C. Phase construction limits. Indicate the length along the centerline pier to be constructed in each phase. Use separate details and sketches where necessary.

D. Existing structure removal limits. Indicate the length along the centerline cap to be removed. Hatch sections to be removed. Use separate details and sketches where necessary.

E. Pedestal spacing and dimensions. Dimension pedestal spacing with respect to the pier cap.

F. Centerline(s) of bearing. Dimension offset from face of pier to one or both centerlines of bearing.

G. Section of pier cap and pier column. Multiple sections may be required for non-prismatic members. Indicate locations where all sections are taken on the pier plan and elevation sheets.

H. Detail showing architectural treatments such as ribbing, striations or rustication. Measure concrete cover from the deepest part of relief. See Figure 13.2-1.

Figure 13.2-1 Hammerhead Pier Rustication

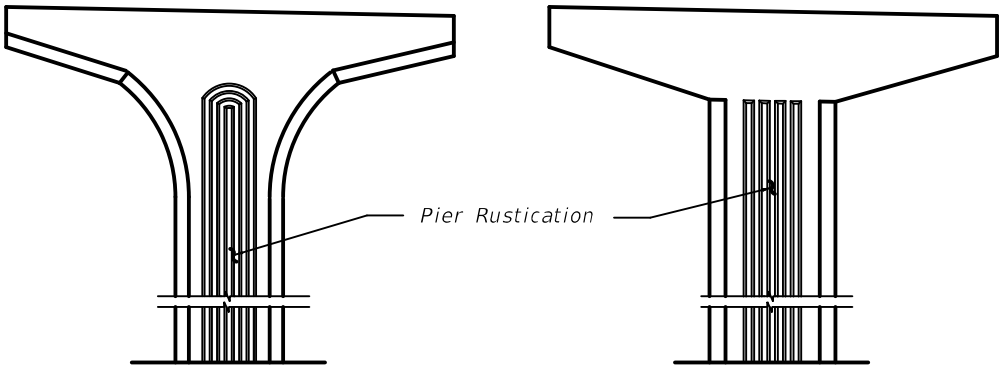

ELEVATION VIEW - HAMMERHEAD PIERS
(Flush Pier Face w/ Rustication Shown)

I. Pedestal details including reinforcement, concrete cover, preformed anchor bolt or rod blockout locations & reinforcement embedment.

J. Drain pipes. Show connections, cleanouts, elbows and all other necessary parts. A minimum of one cleanout in each vertical and one cleanout in the lateral is required. Check for conflicts with rebar, post-tensioning ducts, anchor bolts or rods, etc. See ***SDM*** Chapter 22 for Drainage Requirements on Bridges.

K. Locations for anchor bolt or rod blockouts. Indicate depth and diameter of blockouts as well as plan location.

L. All construction joints including each lift of column pours. See ***SDG*** Chapter 3 for details.

M. Include mass concrete, admixture requirements, etc. consistent with the requirements stated in the General Notes. This information may be included on the pier plan and elevation sheet or detail sheet.

13.3 PIER DRAWINGS AND DETAILS - PLAN VIEW

In addition to the items in ***SDM*** 13.2, include the following in the plan view of Pier sheets:

A. Dimensions along centerline of pier tied to the Station Line. Dimensions shall be comprehensive to allow for complete layout of the pier.

B. Beam/girder centerlines. Indicate beam/girder number on each centerline. Indicate the acute angle between the beam/girder centerline and the centerline of bearing for each beam/girder or show as "Typical". Dimension beam/girder spacing with respect to the centerline pier. Tabulate if necessary.

C. Skew angle between Station Line and centerline pier. See ***SDM*** Chapter 2 for skew definitions.

D. Direction of Stationing.

13.4 PIER DRAWINGS AND DETAILS - ELEVATION

In addition to the items in ***SDM*** 13.2, include the following in the elevation view of Pier sheets:

A. Elevations at all locations critical to layout including:
   1. Pedestal/beam seat elevations.
   2. Top and bottom of pier cap at corners, ends and slope break point.
   3. Top and bottom of pier column.
   4. Finished ground.
   5. Top of footing

   When a single drawing showing elevations is used for more than one pier, elevations may be tabulated if necessary for clarity.

B. Dashed outline of existing piers or other adjacent structures and approximate dimensions. For widenings, provide approximate dimensions and/or tie-ins between proposed and existing footings and pier caps. If the proposed bridge is built near an existing-to-remain structure, show the dashed outline of the structure and determine if dimensions are pertinent.

C. Identify a working point when required (i.e. superelevation conditions).

13.5 PIER DRAWINGS AND DETAILS - FOOTINGS

Include a separate detail for pier footings. For examples illustrating the content and format of completed Pier Footing Details sheets, see the ***Structures Detailing Manual Examples***. Generally this is a separate sheet but can be included on the pier details sheet if space permits. At a minimum, include the following footing details:

A. Footing dimensions.

B. Centerline of footing in both directions.

C. Footing reinforcement.

D. Pile or shaft locations in the footing. Dimension pile or shaft spacing with respect to the centerline of the footing. Distinguish between centerline of column and centerline of pier.

E. Outline of column(s). Show as dashed.

F. Detail of tension pile connection to footings. Include tension pile connection rebar in reinforcing bar list for the footing. See Figure 13.5-1, Figure 13.5-2 and Figure 13.5-3.

G. Footing depths below the finish grade.

Figure 13.5-1 Tension Pile Details (1 of 3)

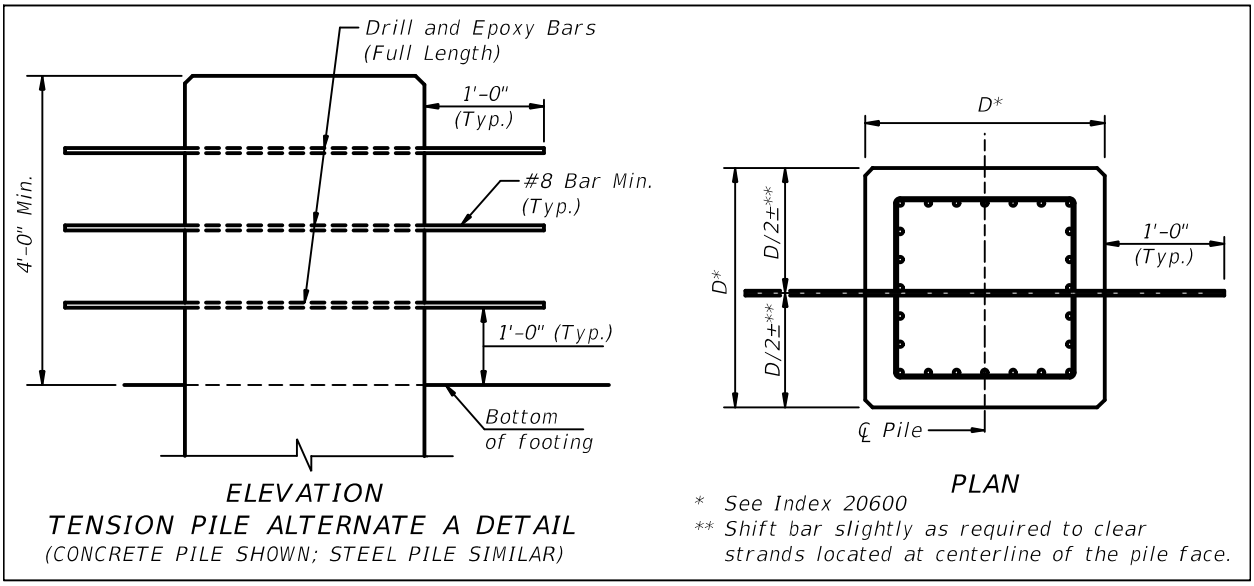

Figure 13.5-2 Tension Pile Details (2 of 3)

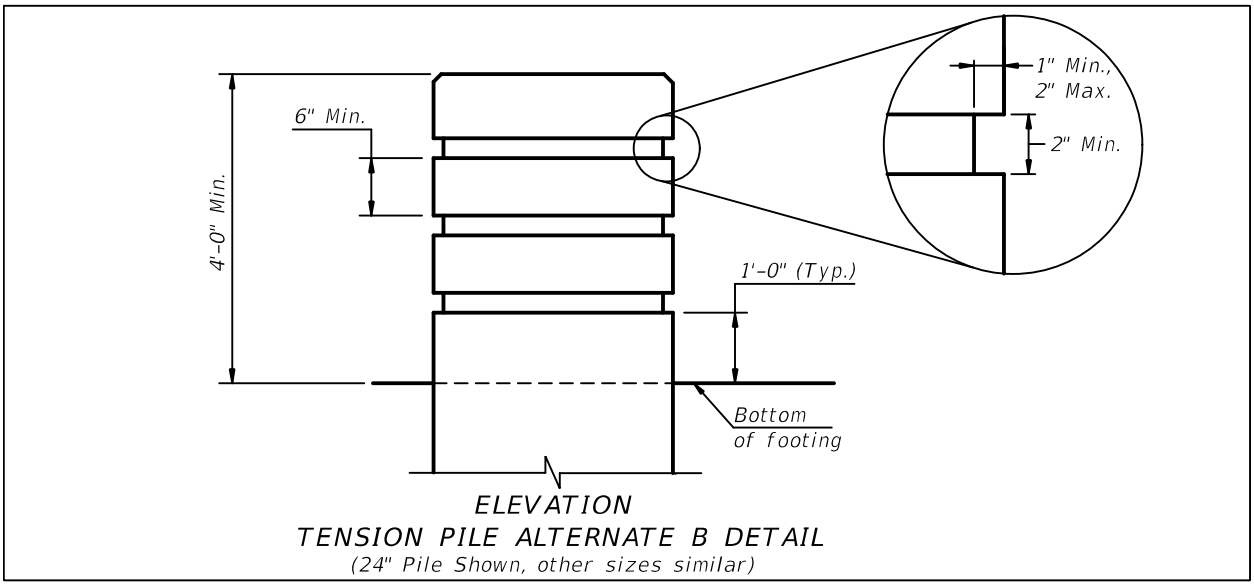

Figure 13.5-3 Tension Pile Details (3 of 3)

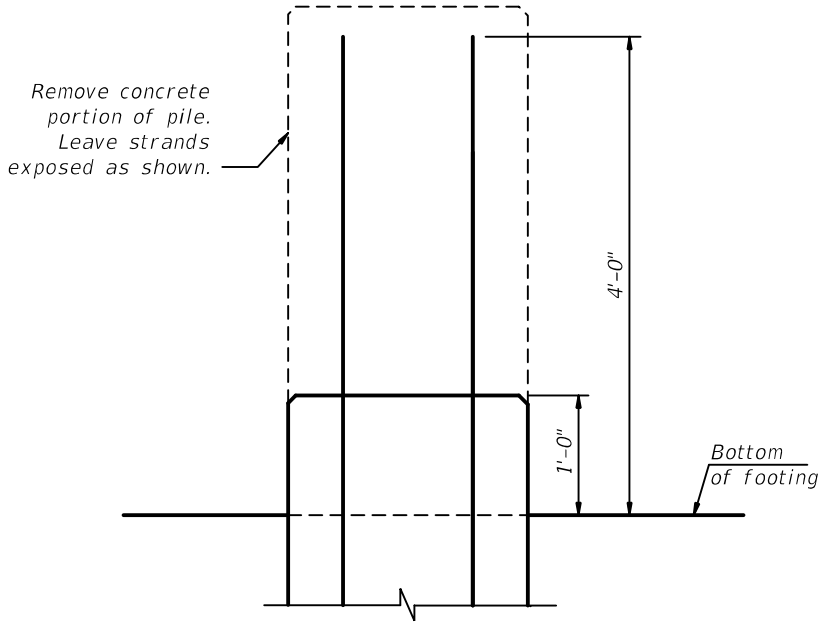

ELEVATION
TENSION PILE ALTERNATE C DETAIL
(24" Pile Shown, other sizes similar)

13.6 PIER DRAWINGS AND DETAILS - REINFORCING DETAILS

Consider the following preferred reinforcing details when detailing piers:

A. Avoid column cross-ties with 180-degree hooks at each end. The preferred method is to provide a 90-degree hook at one end to allow the tie to be rotated into position. Do not use this detail when plastic hinging due to ship impact is anticipated. See Figure 13.6-1.

Figure 13.6-1 Preferred Column Tie Detail

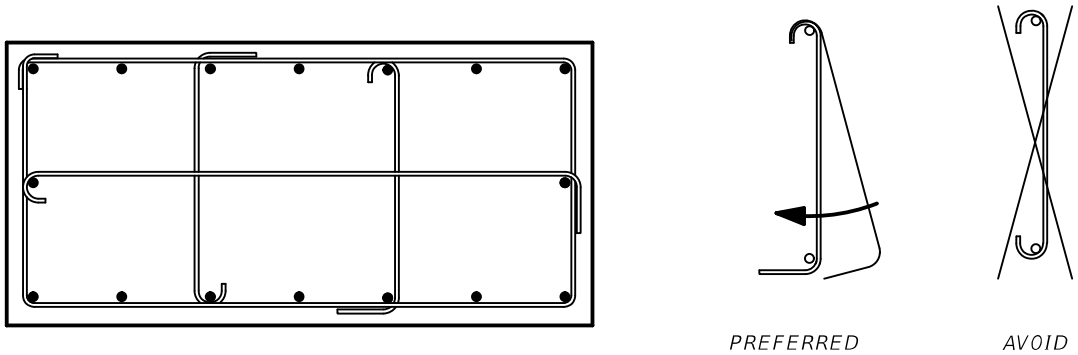

PREFERRED COLUMN TIE DETAIL

B. When detailing variable-width pier columns, consider extending the typical pier column cage through the flared section, detailing the flare with "U" bars. Horizontal "U" bars may be detailed with a constant mark by varying lap dimensions. See Figure 13.6-2.

C. Unless plastic hinging is anticipated, standard hoops may be used on circular columns provided that the ties are rotated so the lap splice location varies throughout the length of the column. See Figure 13.6-3.

Figure 13.6-2 Variable-Width Pier Reinforcing Details

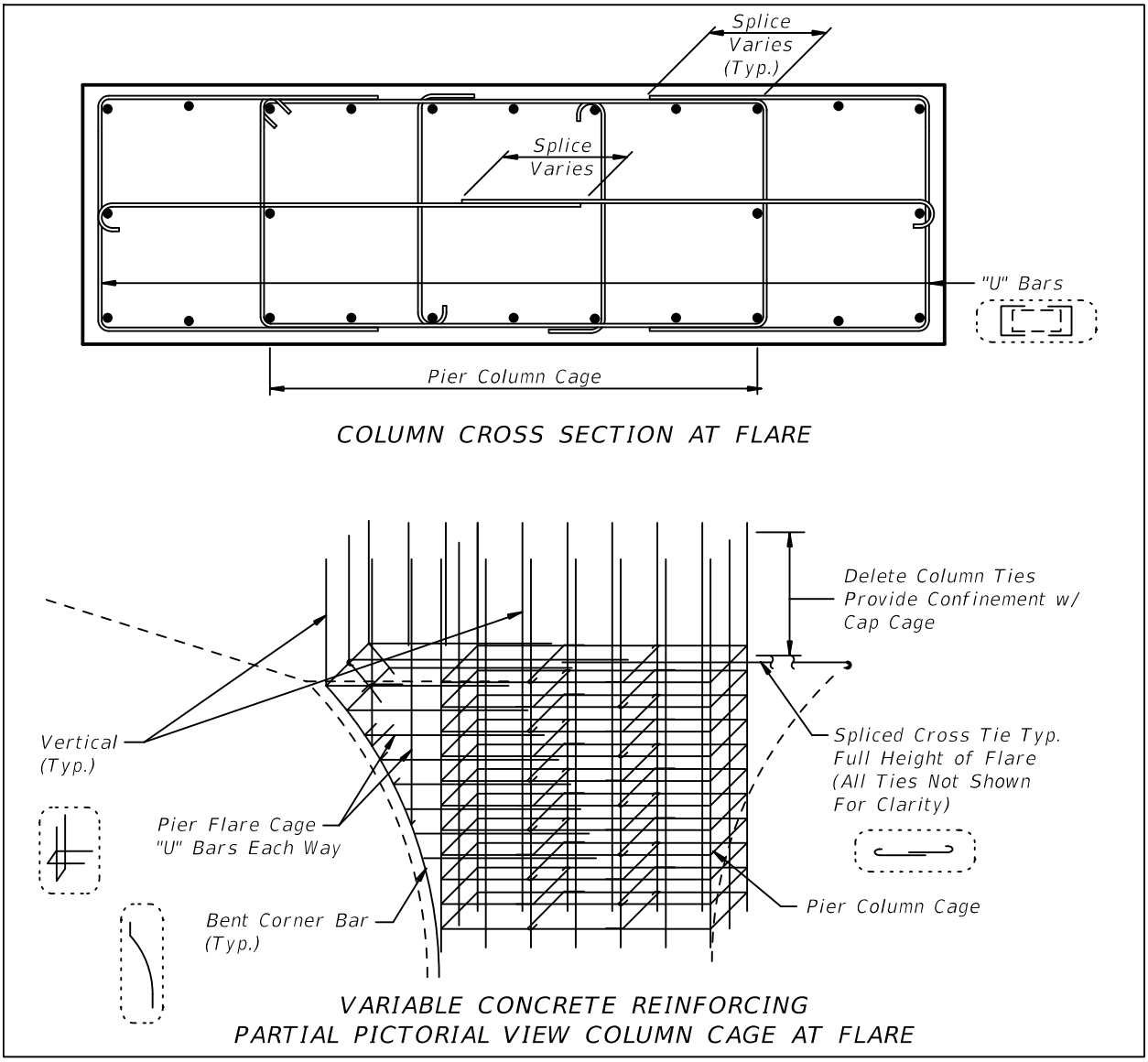

Figure 13.6-3 Circular Column Cross Section

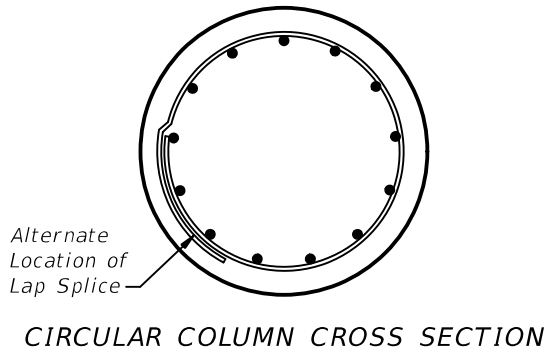

13.7 PIER DESIGN CONSIDERATIONS - GENERAL

Design piers with the following considerations being taken into account:

A. Detail steel to avoid conflicts between reinforcement in the cap and the column, the footing and the column, and the footing, shafts and piles. Ensure that pedestal steel does not conflict with top reinforcement in pier cap.

B. For concrete pours such as pier caps and footings that will be greater than 5 feet tall, provide a minimum 10-inch space in the main reinforcement to allow the concrete discharge chute to fit through. See Figure 13.7-1. See ***Specifications*** Section 400 for concrete discharge height limitations.

Modification for Non-Conventional Projects:
Delete ***SDM*** 13.7.B.

C. Fully develop main cap steel at cap ends in regions with large negative moments. Use "L" bars in lieu of "J" hooks in the top layer of reinforcing steel. If necessary, increase the pedestal setback dimension from edge of cap. See Figure 13.7-1.

Figure 13.7-1 Cap Steel Details

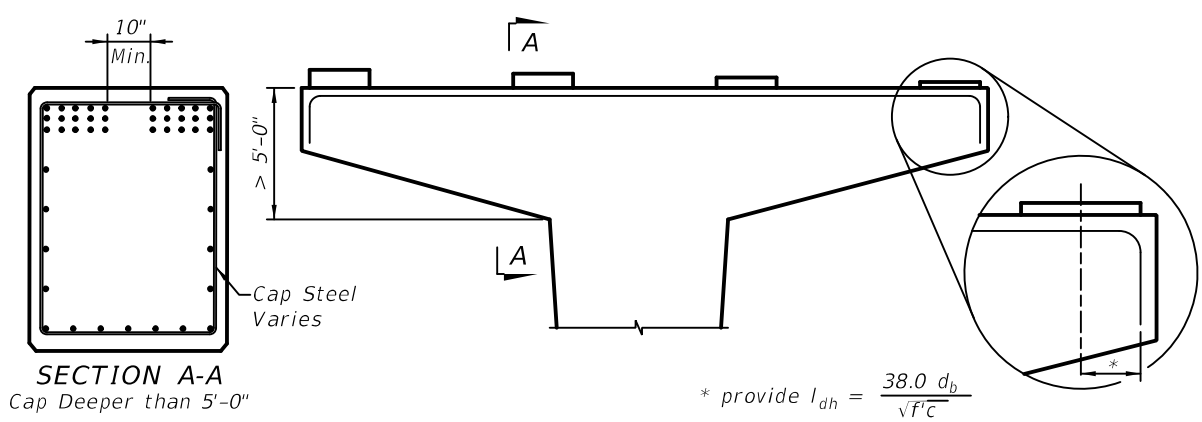

D. Fully develop column steel into pier cap and into footing. Do not include steel used in architectural details such as fillets in strength calculations.

E. Dimension footings to accommodate driving tolerances for piles and placement tolerances for shafts. Plan elevations of top of shaft shall be 3" above bottom of footing to ensure there is no gap between the footing and top of shaft if constructed within tolerance. Specify an embedment of 12" for piles that are not required to be developed.

F. Add details for location of main steel mats in footings giving consideration to pile driving tolerances and drilled shaft placement tolerances. Avoid conflicts between footing reinforcement and shaft reinforcement.

G. Detail drilled shaft reinforcement to ensure that it can be fully developed taking reinforcement cage placement tolerances into account. Whether a cap or a single column is placed on top of the shaft(s), design for the worst-case placement of the shaft reinforcement.

Figure 13.7-2 Drilled Shaft Reinforcing Details

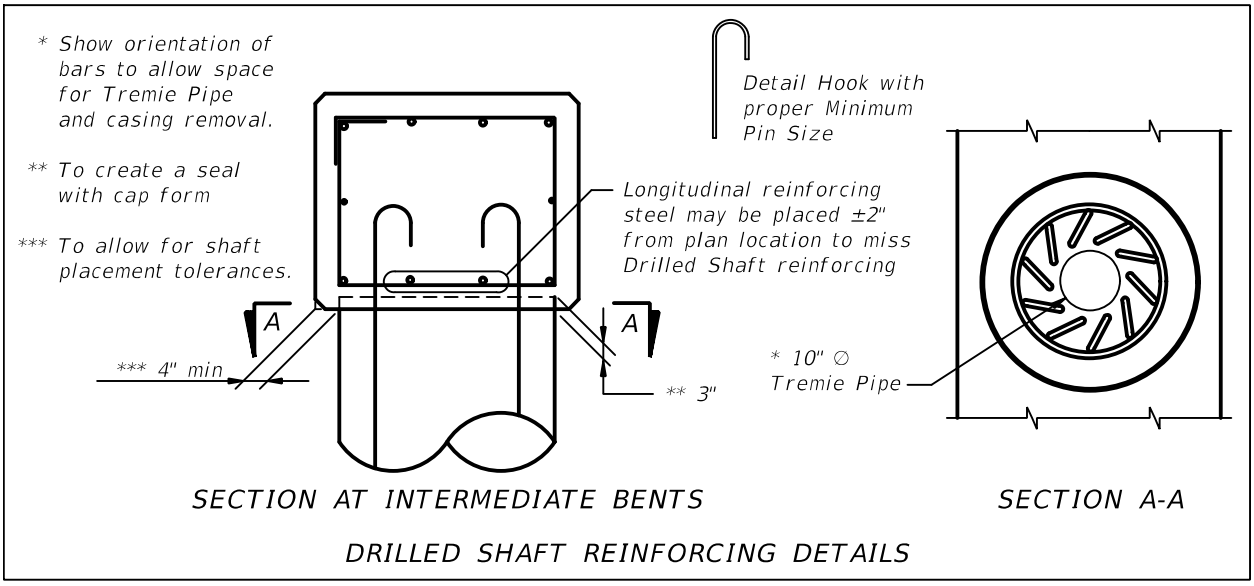

H. Detail pier column to be stepped-in from face of pier cap by 4" on each face. This will allow column reinforcement to be inside of the pier cap reinforcement cage and will facilitate tying cap steel on the ground and lifting into the form. See Figure 13.7-3.

Figure 13.7-3 Pier Cap Reinforcing Details

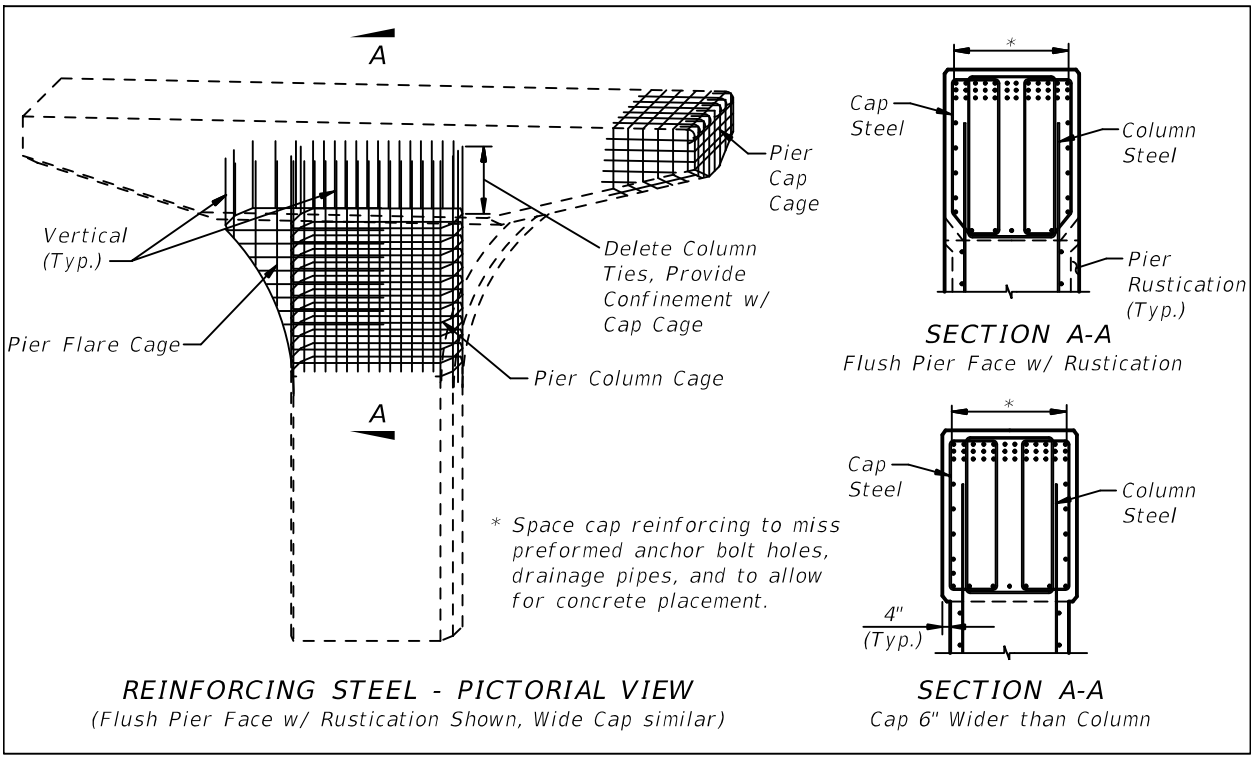

I. Consider reducing column reinforcement in tall columns where allowed by the design.

J. For multi-span bridges, only piers adjacent to a lower roadway or railroad may need to be skewed to meet horizontal clearance requirements. Similarly, only piers adjacent to a navigation channel may need to be skewed to meet minimum navigation channel width requirements. Consider making remaining piers normal to the bridge. For water crossings continue to use skews where minimum navigational requirements or scour governs the design.

K. Verify that the dimensions of the pedestals are compatible with the bearing pad selection and skew. Place bearing pads orthogonal to the centerline of the beam wherever possible except where specifically shown to be skewed on the ***Design Standards***.

L. For caps with multiple layers of steel, place reinforcement with minimal distance between layers in accordance with ***LRFD*** 5.10 so as to maximize distance from neutral axis.

M. Standardize sizes and pile grid/shaft layout on pier footings throughout as much of the project as possible.

Modification for Non-Conventional Projects:
Delete ***SDM*** 13.7.M.

N. Design pier and column reinforcement so that it can be tied prior to erection, and not required to be tied in the air.

Modification for Non-Conventional Projects:
Delete ***SDM*** 13.7.N.

O. Preformed anchor bolt or rod blockouts shall be 4-inch diameter minimum. Completely detail blockouts and verify there are no conflicts with reinforcement. Use either a corrugated galvanized metal form that is to be left in place or a smooth removable form. See Figure 13.7-4 and Figure 13.7-5 for anchor rod details for composite neoprene bearings, and pot and disc bearings, respectively.

Figure 13.7-4 Anchor Rod Details for Composite Neoprene Bearings

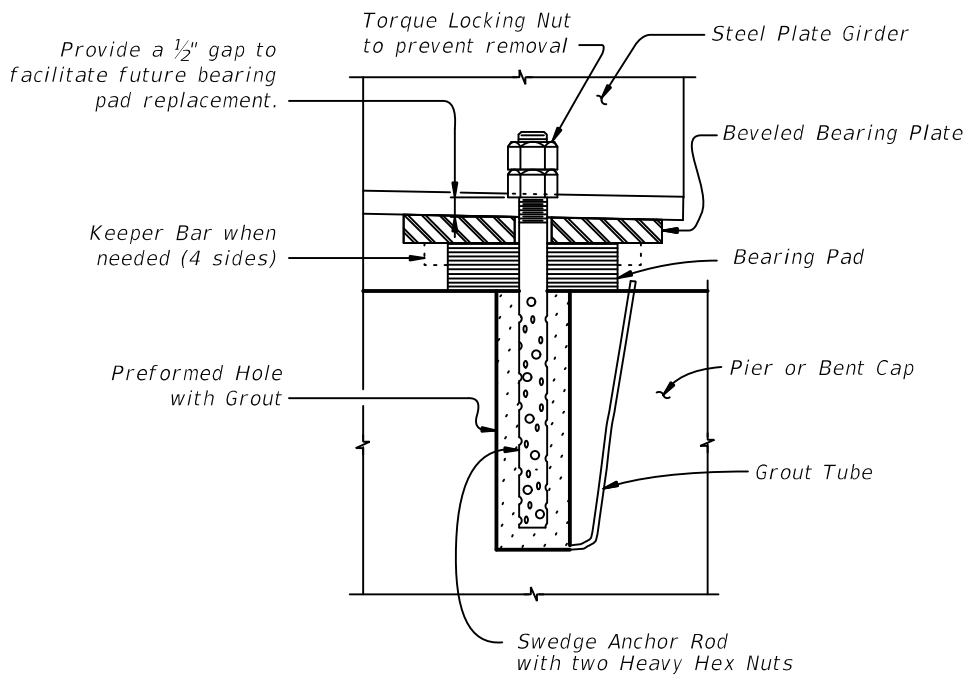

ANCHOR ROD DETAIL FOR COMPOSITE NEOPRENE BEARINGS

Figure 13.7-5 Anchor Rod Detail for Pot and Disc Bearings

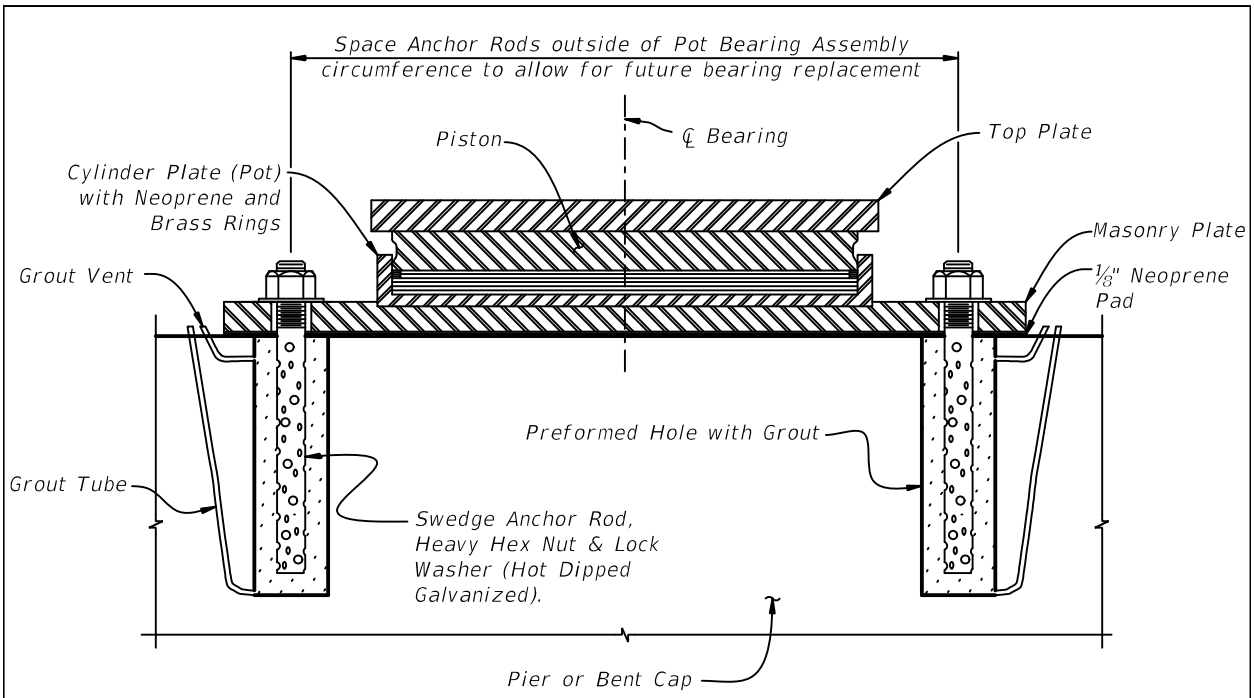

ANCHOR ROD DETAIL FOR POT AND DISC BEARINGS
(POT BEARING SHOWN, DISC BEARING SIMILAR)

13.8 PIER DESIGN CONSIDERATIONS - PIER AESTHETICS (Rev. 01/17)

Aesthetics should balance efficiency, economy and elegance. For an in depth discussion of bridge aesthetics, refer to the ***AASHTO Bridge Aesthetics Sourcebook, November 2010***. The following issues and suggestions can be incorporated into any project's aesthetic plans to help achieve these goals:

A. When determining pier shape and proportions, look at the tallest and shortest structures as well as minimum and maximum cross slopes. Use uniform dimensions that will result in acceptable aesthetics at all locations. This applies to multi-pier bridges as well as multi-bridge projects.

B. The use of cheekwalls on pier caps is required at locations where two beam or girder types of different shapes, heights or dissimilar materials are to be used on adjacent spans. A curved bridge supported by straight beams is another location where pier cap cheekwalls can economically enhance a bridge's aesthetics. Cheekwalls on skewed bridges should be parallel to the skew, not normal to the pier cap. The inside face of pier cap cheek walls should be poured close to the exterior beam to prevent shadowing. Provide sufficient clearance between the cheekwall and the exterior beam to allow for jacking of the span and bearing replacement. See Figure 13.8-1.

Figure 13.8-1 Pier Cap Cheekwall Details

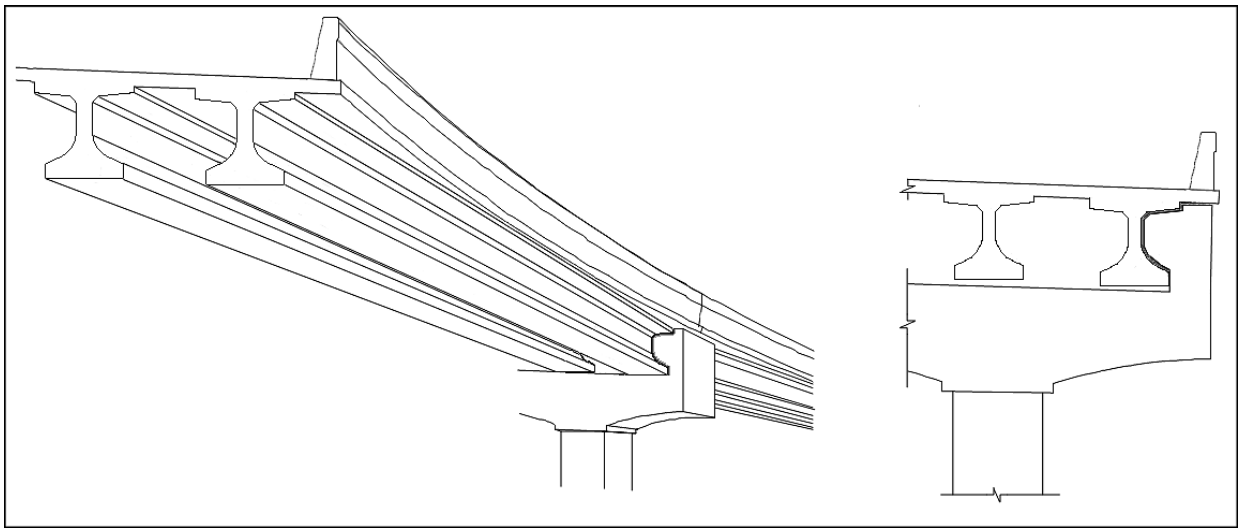

C. For multi-bridge projects, develop a family of pier shapes at the earliest stages of the project. Choose pier shapes that both meet the structural requirements of the bridges within a project while also providing pleasing shapes at all locations. Consider multi-column piers, hammerheads, straddle piers, C-piers or any other special pier type as the project requires. See Figure 13.8-2 and Figure 13.8-3.

Figure 13.8-2 Example Pier Shapes

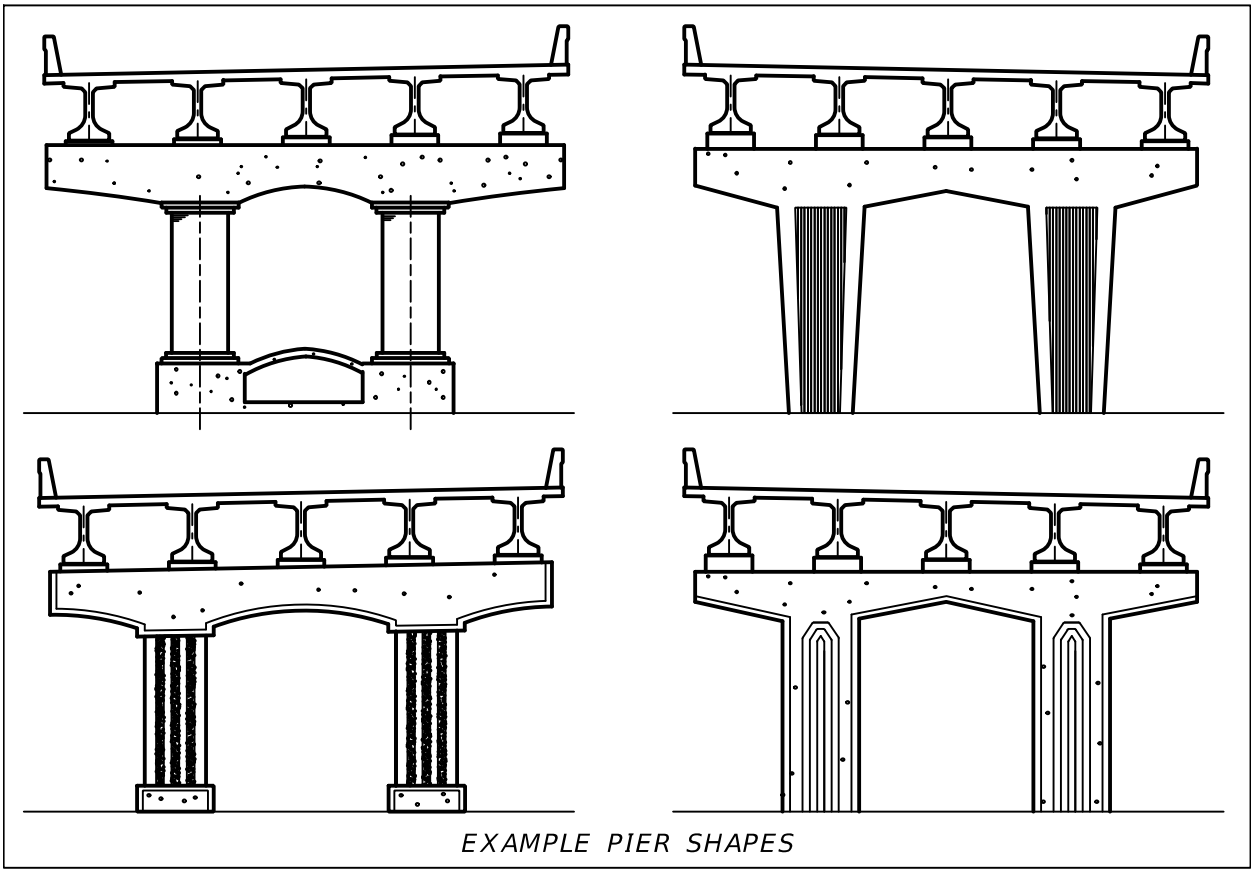

Figure 13.8-3 Pier Families

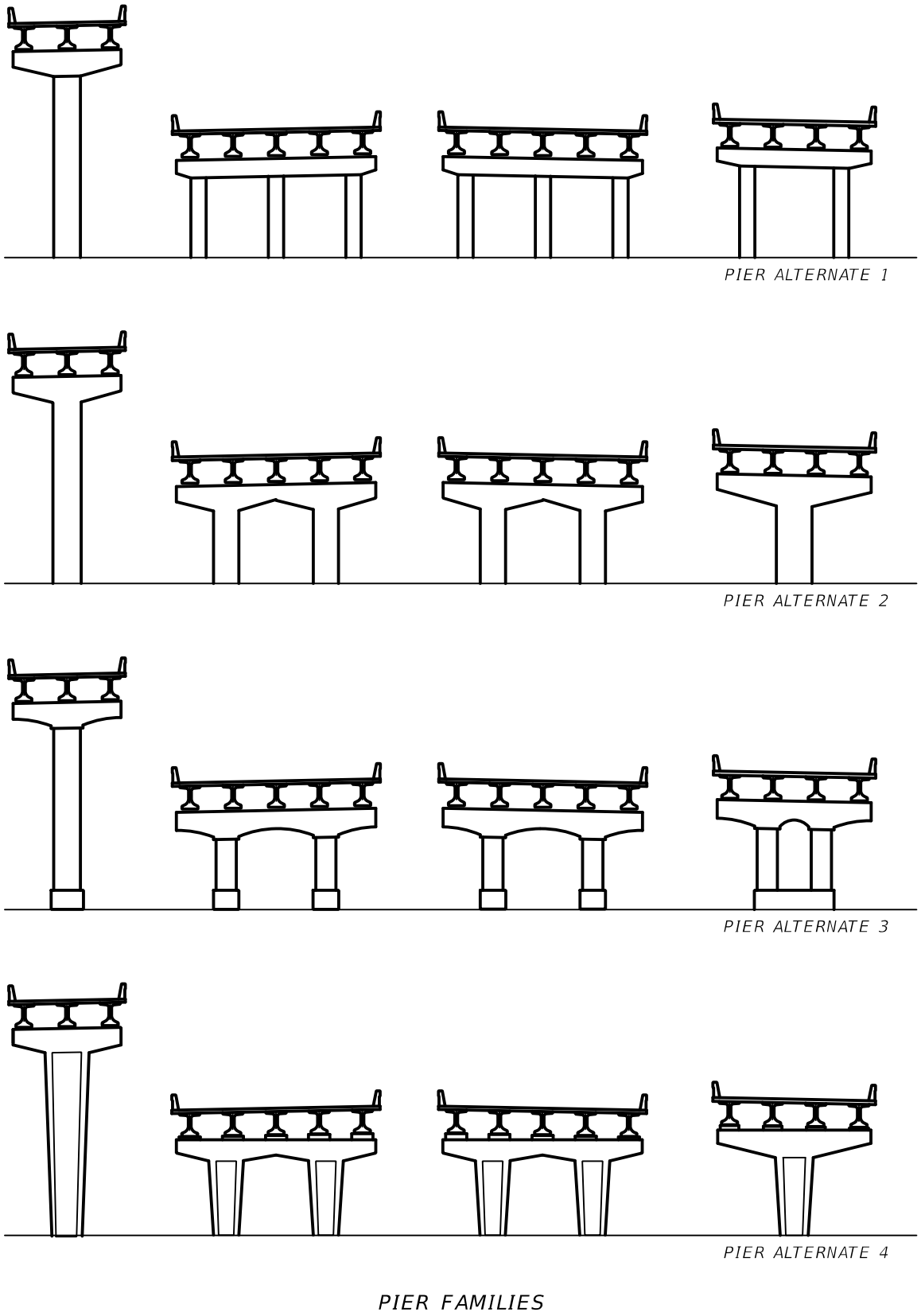

D. For piers that utilize a cap form that will be rotated to accommodate variable cross slopes, pier rustication or striation details should stop short of the pier cap in the column. This will avoid misalignment of the form liner as the pier cap rotates about the working point to make up the superelevation. See Figures 13.8-4 and Figure 13.9-1. This will also allow column steel to extend inside cap cage while maintaining concrete cover per 13.7.H above.

Figure 13.8-4 Rustication Detail At Working Point Of Rotated Pier Cap

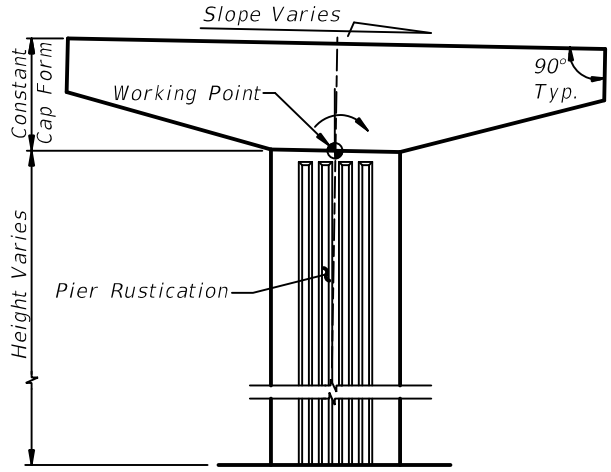

ELEVATION VIEW - HAMMERHEAD PIER
Rustication Stops Below Working Point

E. For piers with constant cross slope sections, piers that utilize flush columns and caps, or piers that utilize split cap forms flush with the column, the rustication detail may extend into the cap. Detail the pier cap so that the same form can be re-used for maximum efficiency. See Figure 13.8-5, Figure 13.9-2, Figure 13.9-3 and Figure 13.9-4.

F. Larger chamfers can help reduce the apparent size of large, bulky concrete elements. See Figure 13.8-5.

Figure 13.8-5 Example Pier Shapes for Straight Bridges or Constant Cross Slopes

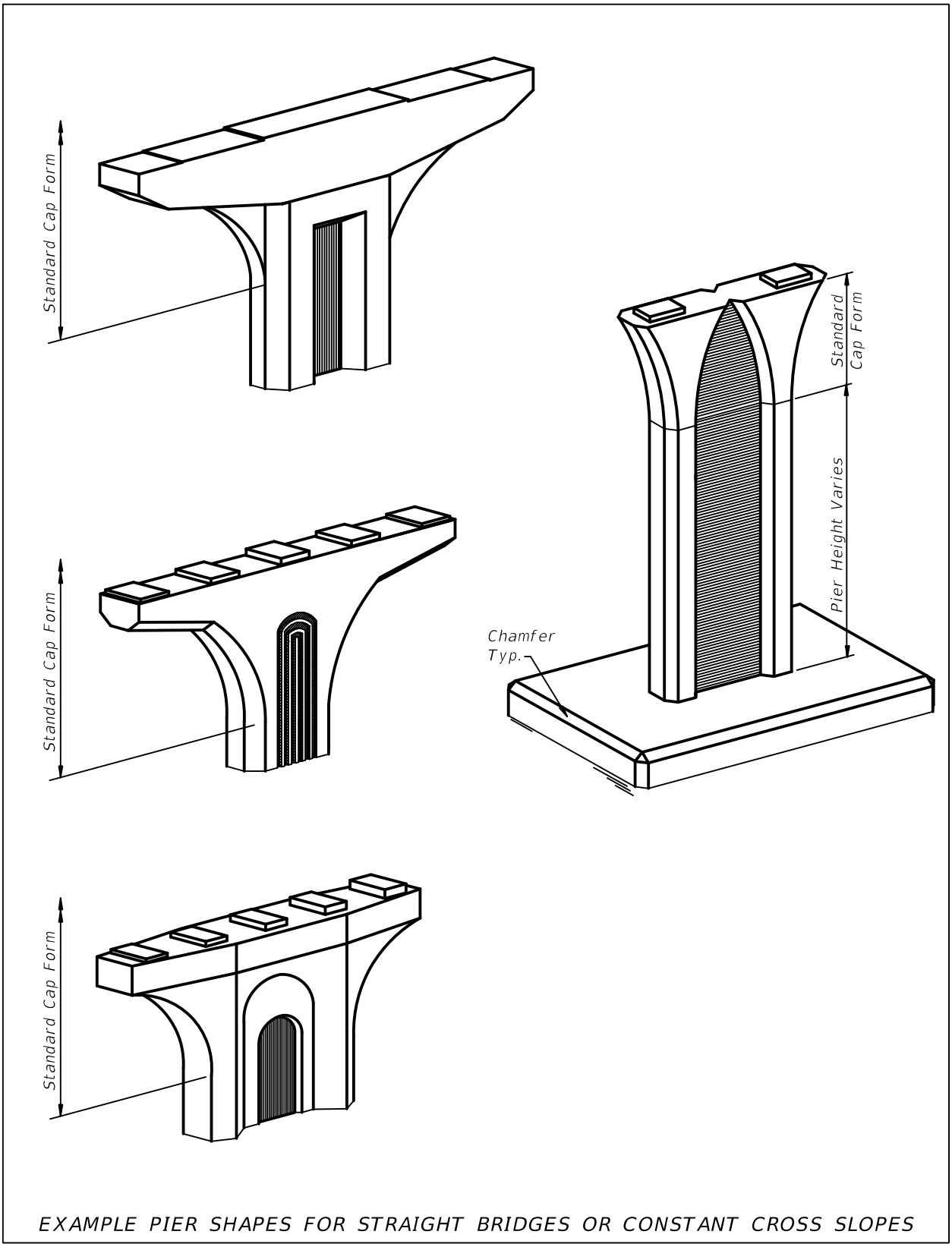

13.9 PIER DESIGN CONSIDERATIONS - HAMMERHEAD PIERS

In addition to the applicable sections above, address the following issues when designing and detailing hammerhead piers:

A. It is preferable to rotate pier cap about a working point or utilize split forms to facilitate varying cross slopes. Acceptable methods are shown in Figure 13.9-1 through Figure 13.9-4. Utilize standard form shapes where practical to minimize formwork and standardize the reinforcement cage.

Figure 13.9-1 Pier Cap Details (1 of 4)

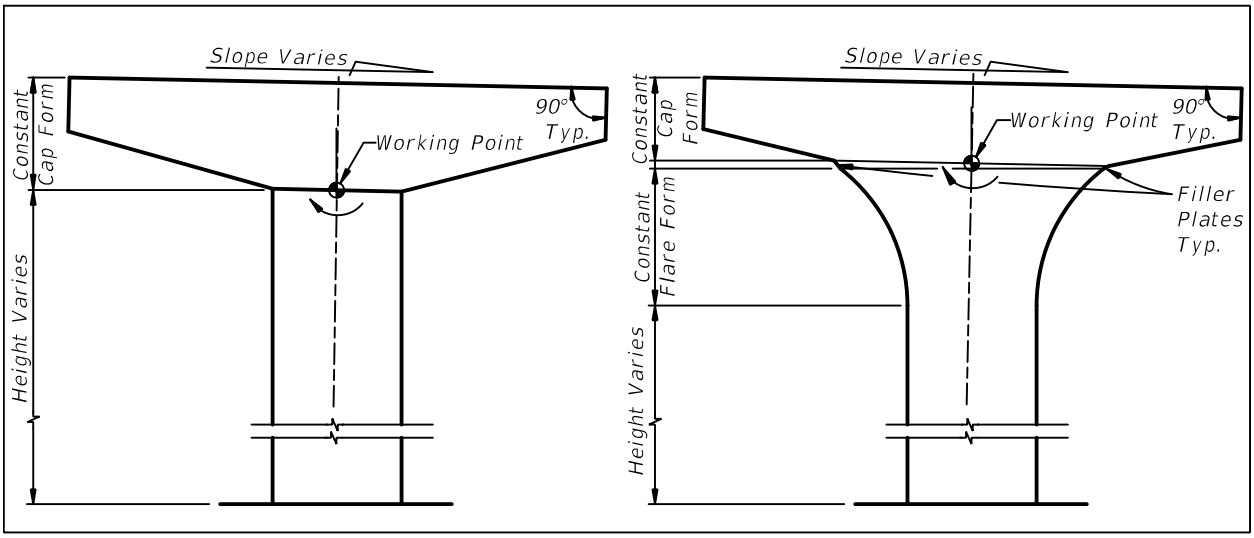

Figure 13.9-2 Pier Cap Details (2 of 4)

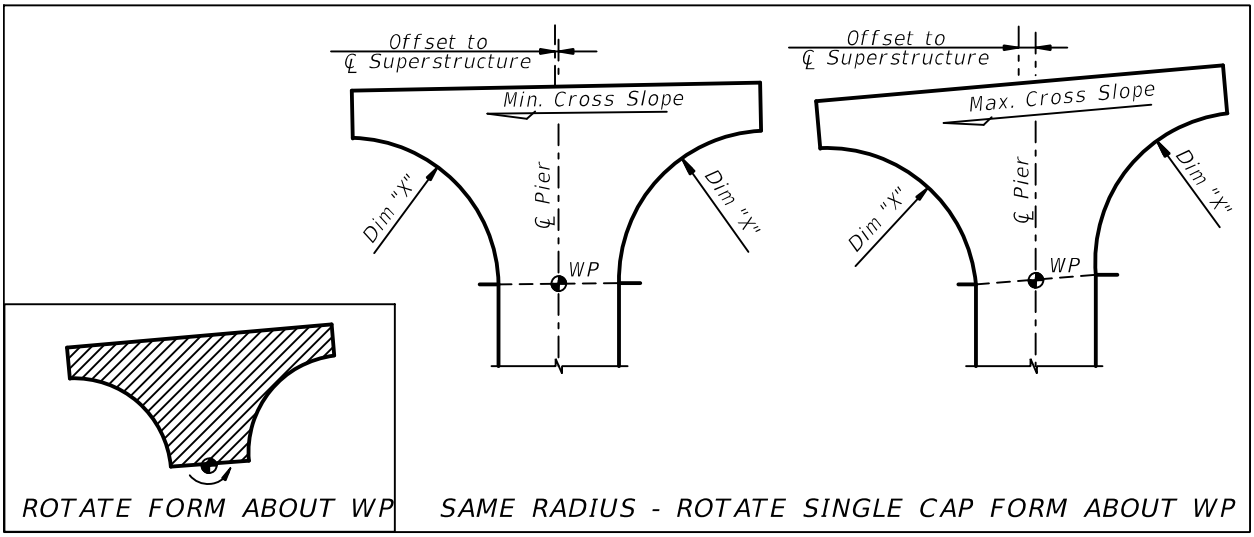

Figure 13.9-3 Pier Cap Details (3 of 4)

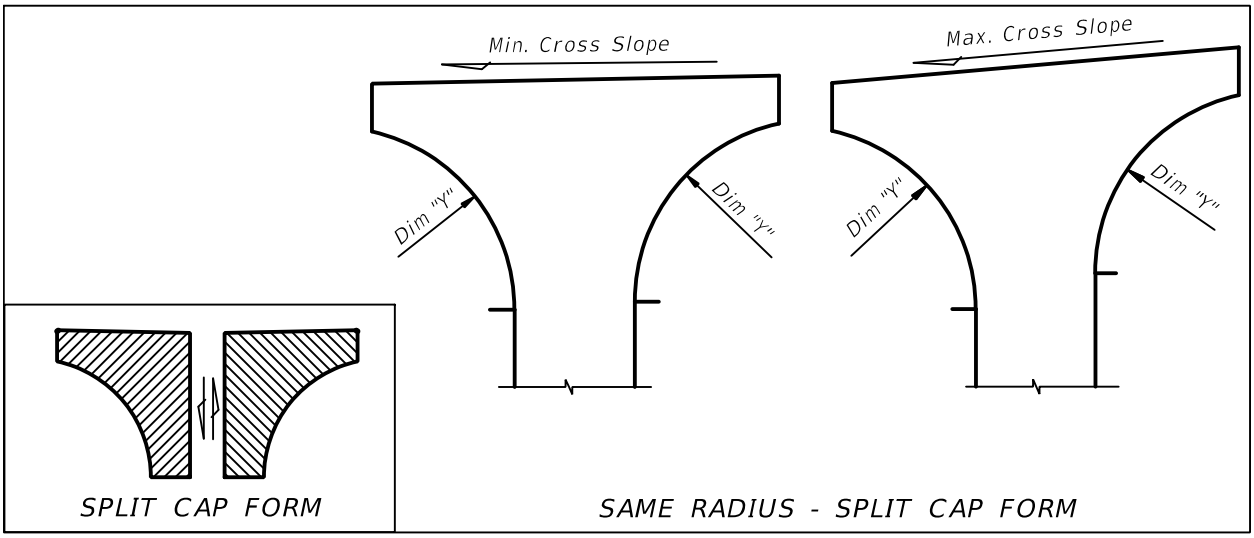

Figure 13.9-4 Pier Cap Details (4 of 4)

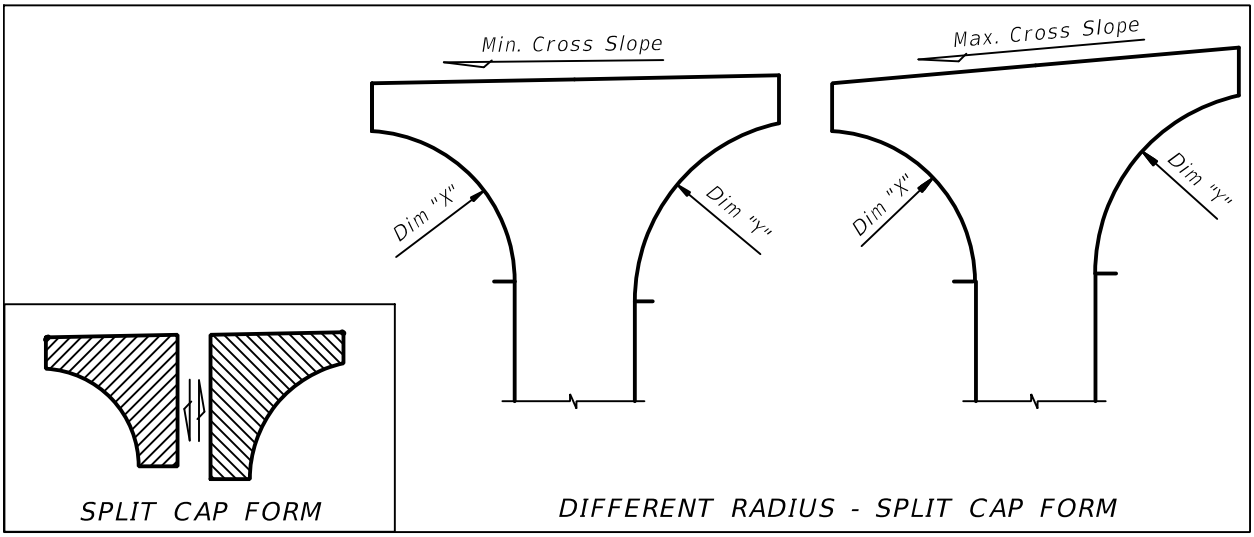

B. To avoid pier caps encroaching on the clear zone, consider using multiple staggered single column piers in lieu of an integral cap. See Figure 13.9-5.

Figure 13.9-5 Staggered Column Alternate

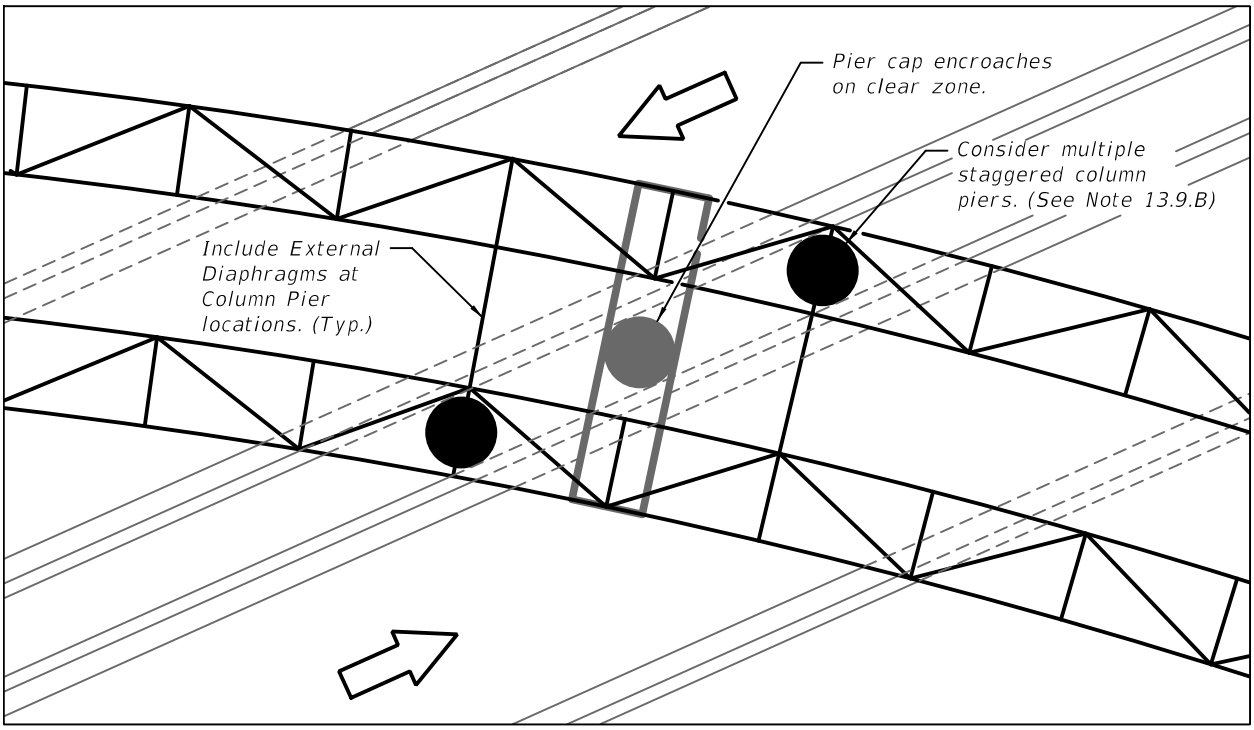

13.10 PIER DESIGN CONSIDERATIONS - INTEGRAL PIERS (Rev. 01/17)

Integral piers present significant design and detailing challenges. Figure 13.10-1 through Figure 13.10-3 show general details that are commonly found in integral piers. In addition to the applicable sections above, address the following issues when designing and detailing integral piers with structural steel girders:

A. Be aware of additional considerations required for continuous beam designs due to integral pier cap deflections.

B. Show temporary supports.

C. Completely detail openings required for drain pipes and utilities which are intended to pass through the integral cap.

D. In addition to the applicable sections above, address the following issues when designing and detailing integral piers with concrete caps (see Figure 13.10-1 and Figure 13.10-3):

   1. Generally, design concrete integral pier caps utilizing post tensioning to maximize the efficiency of the design.

   2. Include materials and details for concrete consolidation, including admixtures, to avoid honeycombing. Consider bleed holes and vent tubes to allow air to escape and concrete to consolidate.

   3. Show shear stud spacing and size.

   4. See ***SDM*** 13.13 for Post-Tensioning requirements.

Figure 13.10-1 Integral Concrete Pier Cap Details

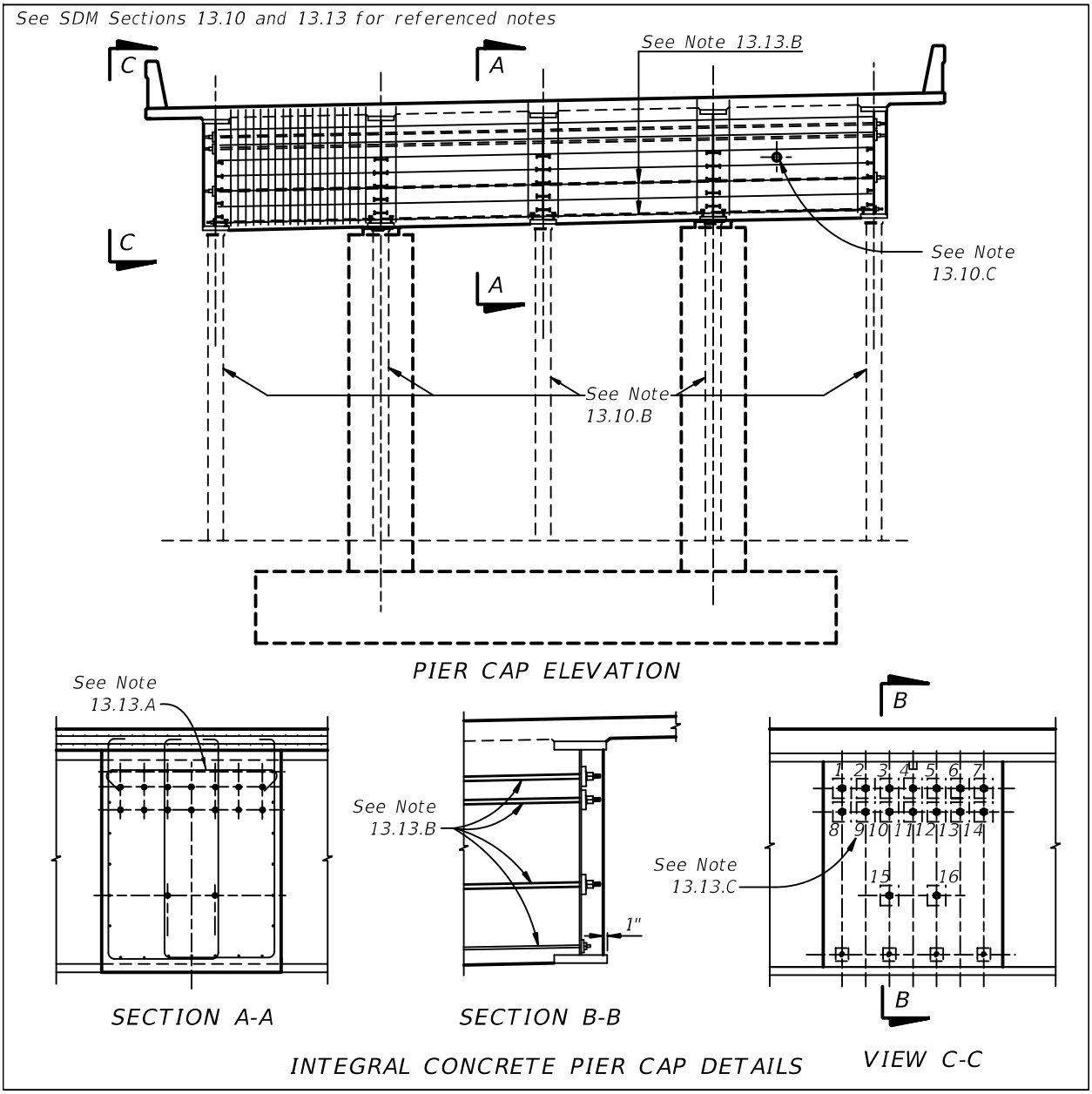

E. Concrete is the preferred material for integral piers. However, if a steel pier cap is used, follow these guidelines (see Figure 13.10-2):

1. Specify structural steel in accordance with the requirements of ***SDG*** 5.3.1.
2. Show splice plates and bolt spacing and layout. Indicate bolt size and type.
3. Indicate weld type and size using AWS standard welding symbols.
4. Designate all Fracture Critical Members (FCM) in the plans. Tabular format is acceptable.
5. Include a plan note requiring full shop fit-up.

Figure 13.10-2 Integral Steel I-Girder Pier Cap Details

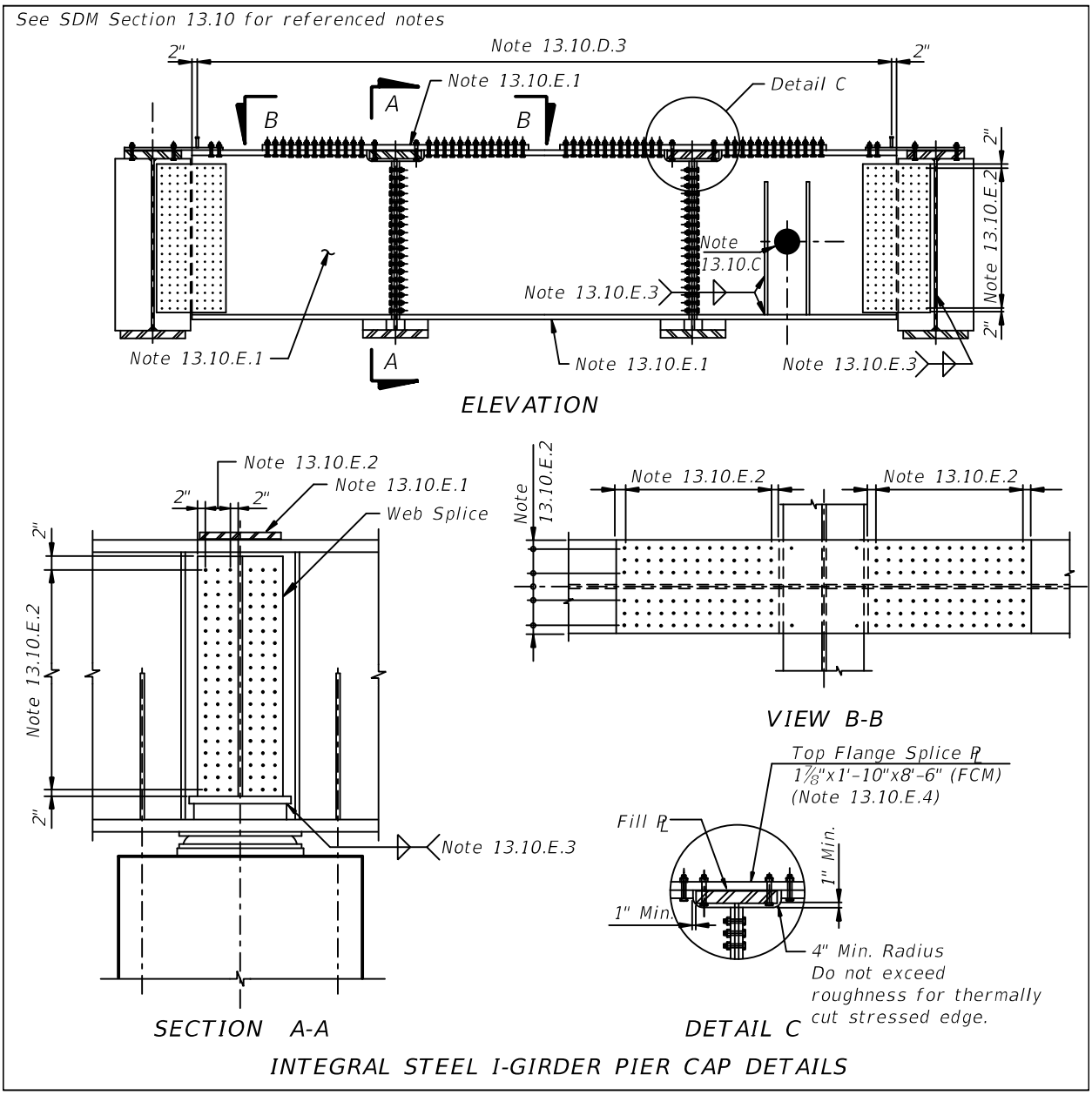

Figure 13.10-3 Integral Concrete/Steel Pier Cap Details

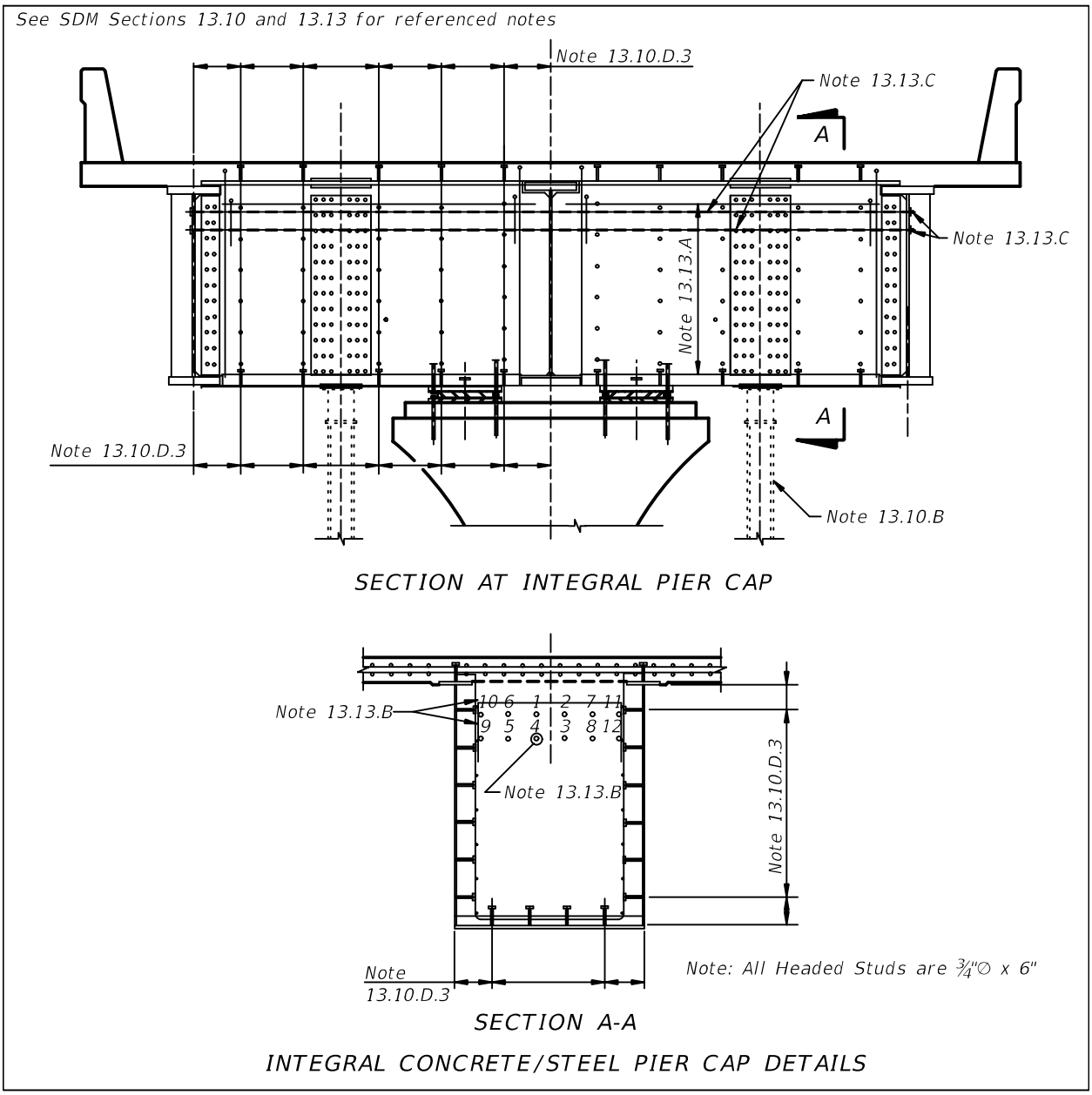

13.11 PIER DESIGN CONSIDERATIONS - STRADDLE PIERS (Rev. 01/17)

In addition to the applicable sections above, address the following issues when designing and detailing straddle piers:

A. When sizing a straddle pier, take into consideration the likelihood that the bridge or roadway underneath will be widened in the future. Depending on this possibility, size the straddle pier to accommodate the ultimate condition.

B. Be aware of additional considerations required for continuous beam designs due to straddle pier cap deflections.

C. Concrete is the preferred material for straddle piers. However, if a steel pier cap is to be used, follow these guidelines (see Figure 13.11-1 and Figure 13.11-2):

   1. Do not place stiffeners on outside of cap.

   2. Provide an access opening for internal inspection of the bent with a minimum opening of 32-inches wide by 42-inches tall. The opening must be properly 'weather-proofed' to prevent infiltration of water and elements that may increase the potential for corrosion or other degradation.

      a. The hatch must be sealed with a closed cell neoprene sponge material.

      b. The hatch must be positively secured with a latch that is accessible from both inside and outside the straddle-bent.

      c. The hatch must be lockable from the outside with a weather-proof lock.

D. See also ***SDG*** 3.11.5.

Figure 13.11-1 Integral Steel Box Girder Straddle Pier Cap

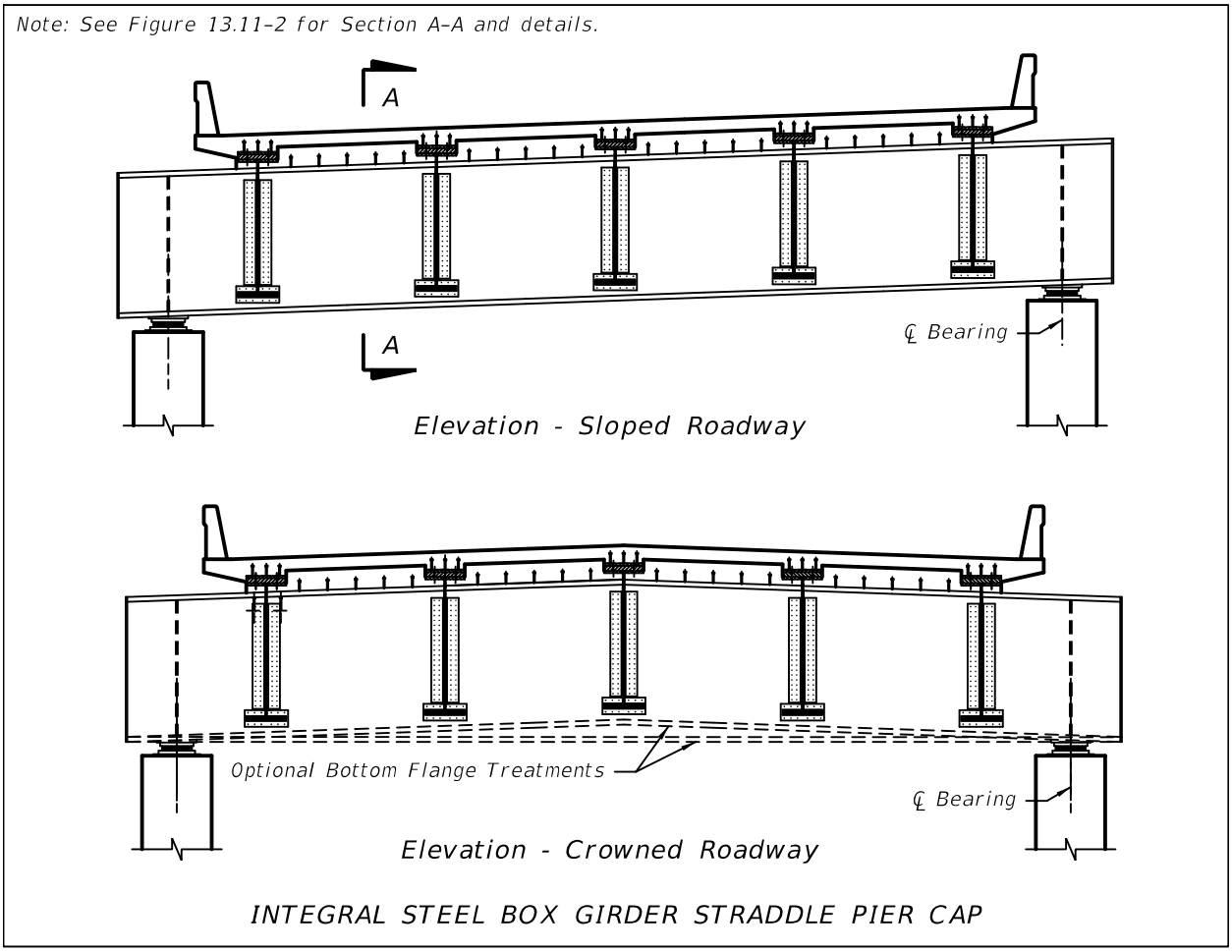

Figure 13.11-2 Integral Steel Box Girder Straddle Pier Cap Details

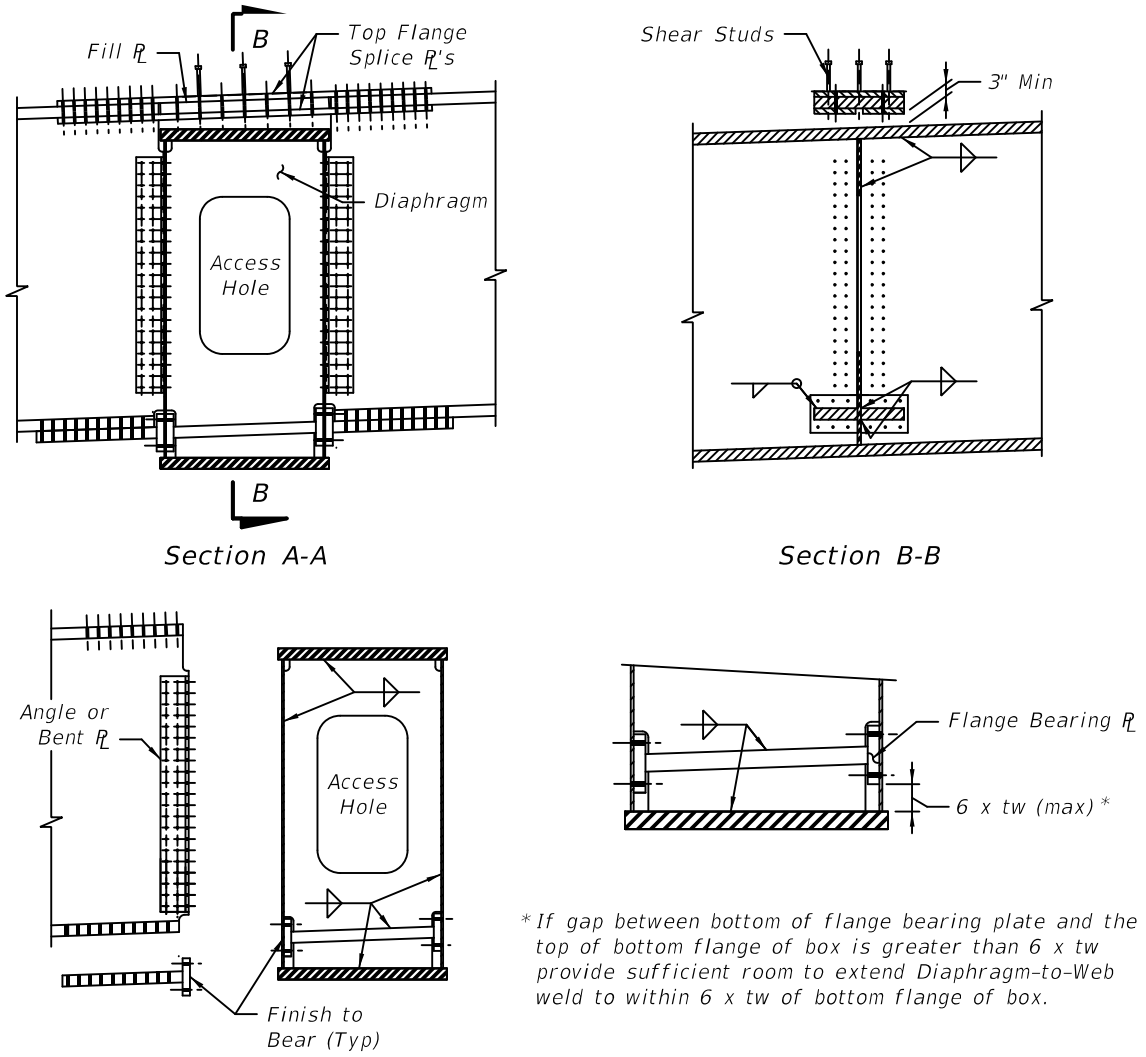

INTEGRAL STEEL BOX GIRDER STRADDLE PIER CAP DETAILS

13.12 PIER DESIGN CONSIDERATIONS - C-PIERS

In addition to the applicable sections above, address the following issues when designing and detailing C-piers:

A. Reasonable effort should be made to avoid sustained tension in piles.

B. It is desirable to center the footing on the centroid of the dead load of the pier plus superstructure. This will help avoid piles in tension.

C. Account for soil stiffness when analyzing the C-Pier framed structure and effects on superstructure torsion.

D. Develop the longitudinal cap steel to the longitudinal column steel at the intersection of the C-Pier frame (column/cap interface).

13.13 PIER DESIGN CONSIDERATIONS - POST-TENSIONING

When designing and detailing post-tensioning in piers, be aware of the following design considerations:

A. See the FDOT Approved Post-Tensioning Systems website for post-tensioning systems approved for statewide use. Designers and detailers should use the dimensions shown on the approved drawings to ensure adequate room is provided in post-tensioned members for post-tensioning hardware, reinforcement, minimum cover requirements, etc.

B. Detail reinforcement to ensure there are no conflicts with post-tensioning ducts and anchorages. Also check for conflicts with anchor bolt or rod blockouts.

C. Clearly number post-tensioning ducts/bars for post tension stressing sequence.

D. Label PT bar size, PT nut and jacking (bearing) plate.

E. Include a detailed stressing sequence for PT tendons. Indicate what stage of construction each tendon will be stressed and to what level. Indicate minimum concrete strengths for concrete cap and deck before stressing operations can begin.

F. Address the placement of PT bars through the pier column. Ensure that there are no conflicts between anchorages or ducts with the reinforcement cage in the pier cap, footing or the column.

G. Create a simple PT duct layout using x,y coordinates. Give vertical dimensions to the center of the duct. See Figure 13.13-1.

Figure 13.13-1 PT Duct Layout Using X,Y Coordinates

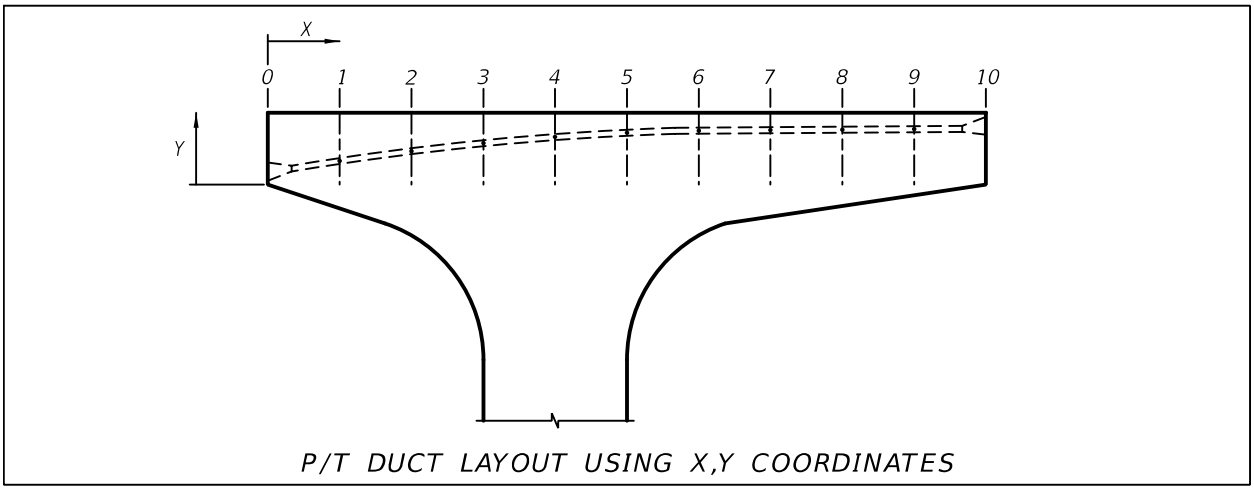

H. Reference appropriate Design Standards for additional requirements regarding post tensioning layouts and details.

I. Address duct spacing and anchorage edge distances. Fully work out fit up issues during the design phase.

J. Consider PT fit up issues, potential out-of-tolerance excessive beam lengths and higher concrete strength requirements when sizing inverted-T caps. Reducing the size of the cap for the purpose of reducing material costs could actually result in a more expensive design based on these issues.

14 FINISH GRADE ELEVATIONS

14.1 GENERAL

A. This drawing is a typical section and schematic plan view of the superstructure that shows finish grade elevations.

B. For spans of equal length, width, number of beam/girder lines and similar skew, only one schematic plan view need be shown.

C. Create equally-spaced transverse lines (T-lines) to show elevations. Turn skewed T-lines perpendicular to bridge coping at the gutterline. Maintain cross slope of bridge deck under traffic railings, raised medians and pedestrian parapets.

D. For examples illustrating the content and format of completed Finish Grade Elevations sheets, see the ***Structures Detailing Manual Examples***.

14.2 ACCURACY

Finish grade elevations are riding surface elevations (top of deck) on the bridge.
To ensure accuracy, adhere to the following guidelines:

A. Space T-lines based on which of the following conditions governs:
   1. Such that a linear interpolation midway between elevations does not deviate from the theoretical elevation by more than 0.005'.
   2. No less than three equal spaces within any given span.
   3. Not more than 10 feet between T-lines within any given span.
   4. Special case for bridges on flat (0.0%) grades: Provide a single T-line at centerline span. Additional T-lines are not required or warranted.

B. For skewed straight bridges, T-lines may be either parallel to the skew or perpendicular to the bridge coping. For curved bridges, make T-lines radial. For curved bridges with a skew, use a combination of skewed T-lines and radial lines as appropriate.

C. Show these elevations to three decimal places.

14.3 FINISH GRADE ELEVATIONS

Tabulate finish grade elevations in a span-by-span or unit-by-unit fashion. These tables may be included on the Schematic sheet, Typical Section sheet or on a separate sheet. Show finish grade elevations at the intersections of the following locations listed in section A and section B:

A. Along the length of the bridge:
   1. Begin/end of approach slabs.
   2. Half way point or third points of approach slabs.
   3. Front Face of Backwall at begin/end bridge stations.
   4. Centerlines of Bearings if multirotational bearings are used.

5. All T-Line locations.
6. Centerlines of piers or intermediate bents.
7. Along deck cut lines and/or construction joints.
8. For steel girder superstructures, at additional intermediate locations that correspond with the girder camber diagram.

B. Transversely:

1. Bridge coping.
2. Gutter line at traffic railings and traffic separators.
3. Back face of traffic railings for inboard mounted railings.
4. Inside of parapet or pedestrian railing.
5. The Station Line.
6. The PGL (if different from the Station Line). If there is more than one PGL, show elevations along each one.
7. Centerline of all beams or girders. For box beams or girders, show elevations at the centerline of each web.
8. Along deck cut lines.

14.4 FINISH GRADE ELEVATIONS-SCHEMATIC PLAN VIEW

At a minimum, show and label the following on the finish grade elevation plan view:

A. Begin/end approach slab.

B. Front Face of Backwall at begin/end bridge stations.

C. Centerlines of piers or intermediate bents.

D. All T-line locations. Label T-lines numerically.

E. Deck cut lines, construction joints and/or longitudinal joints.

F. Bridge copings.

G. All gutter lines, including traffic separators and pedestrian parapets.

H. The Station Line and Direction of Stationing arrow.

I. The PGL (if different from the Station Line). If there is more than one PGL, show elevations along each one.

14.5 FINISH GRADE ELEVATIONS - TYPICAL SECTION VIEW

The typical section views consist of sections through the bridge and approach slabs at locations showing all of the features which elevations will be given to. Clearly label all locations where elevations will be shown, cross slopes and working points for box girders. Use the exact labeling used in the Schematic Plan View.

15 SUPERSTRUCTURE - CONCRETE ELEMENTS

15.1 GENERAL

A. Superstructure plans will include all the details necessary to construct beams/girders, decks, diaphragms, stay-in-place forms and all other related superstructure components.

B. For structures with prestressed concrete beams, include the Table of Beam Variables in the superstructure plans. The Table of Beam Variables can be found in the Structures Bar Menu.

C. Details on how prestressed beam standards are to be incorporated into bridge plans can be found in the ***Instructions for Design Standards (IDS)***.

D. For structures with steel girders, see Chapter 16 for framing plan and girder detail requirements.

15.2 SUPERSTRUCTURE DRAWINGS - FRAMING PLAN

The Framing Plan, used in conjunction with the ***Design Standards*** and the Table of Beam Variables included in the Plans, shows a single, concise graphical representation of the geometry necessary for location and detailing of the beam framing. Include a Framing Plan for bridges with concrete beam superstructures when there are any differences between the individual beams resulting from, but not limited to, any of the following conditions:

1. Horizontally curved alignment or combinations of tangent and horizontally curved alignments, i.e. Dimension "L" varies from beam to beam across the width of the bridge and/or Angle Ø varies between spans along the length of the bridge
2. Skewed substructure or splayed beams, i.e. Dimension "L" and/or Angle Ø varies from beam to beam across the width of the bridge or between spans along the length of the bridge.
3. Intermediate diaphragms are used, or miscellaneous items will be attached to the beams, i.e. locations of inserts or formed holes must be shown. See also ***SDG*** 1.9.
4. Significant superelevation transition within a single span or along the length of the bridge, or change in vertical alignment along the length of the bridge, either of which is large enough such that Dimension "P" varies from beam to beam across the width of the bridge or between beams in adjacent spans.
5. Variable beam designs, i.e. beam length, type, strand pattern and/or Dimension "R" varies from beam to beam across the width of the bridge or between spans along the length of the bridge.
6. Variable bearing types or locations, i.e. Dimensions "J", "K1" and/or "K2" vary from beam to beam across the width of the bridge or between spans along the length of the bridge.

Provide a framing plan showing at a minimum the following information:

A. The distances between intermediate diaphragms measured along the centerline of beams.

B. The distances between beams (centerlines or extensions) measured along the centerline of intermediate bents/piers or FFBW.

C. For straight beams supporting curved bridge decks, the chord lengths between the centerline of intermediate bents/piers or FFBW.

D. The distances from the Station Line to adjacent beams measured along the centerline of intermediate bents/piers or FFBW.

E. Angles between centerline of beams and the centerline of intermediate substructure or begin/end bridge line.

F. Dimension along both faces of beams measured from casting beam end to centerlines of intermediate diaphragm inserts.

G. Beam numbering including span and/or unit number consistent with detail sheets.

H. Stationing and span lengths along the Station Line. Dimension spans to centerline of intermediate substructure or begin/end bridge line.

I. Angles between the Station Line and begin/end bridge line and centerline of intermediate substructure components or centerlines of bearing.

J. All dimensions to the nearest 1/8-inch and all angles to the nearest second.

K. Direction of stationing adjacent to the Station Line.

L. Stationing along the station line. Show stationing from left to right.

M. Stationing for Begin/End bridge and centerline of intermediate substructures. Indicate expansion or fixed bearings.

N. Span numbers. Number from left to right in the direction of stationing.

O. All centerlines of bearing.

P. Angle between diaphragms and beams if not normal to the girder.

Q. PC and PT locations and cross reference to horizontal curve data.

R. Include the following note on I-Beam framing plans: Temporary bracing locations are not shown. For locations of temporary bracing see the 'TABLE OF PRESTRESSED I-BEAM TEMPORARY BRACING MINIMUM REQUIREMENTS AND LOADS'.

15.3 SUPERSTRUCTURE DRAWINGS - PLAN

The Superstructure Plan sheet shows deck reinforcement detailing information and should be worked with a detail sheet of the superstructure section. At a minimum, include the following in the Superstructure Plan sheet:

A. Plan view of the superstructure deck. Use a scale suitable for viewing the details shown on the sheet when printed. If more than one sheet is required, use appropriate matchlines.

B. Show bar callout and spacing. This can be indicated with the first and last bar in a group shown with a callout between the two.

C. Beam type and spacing. Show beam centerlines. Show flange edges and ends as dashed. Identify beam number.

D. Gutterline and coping.

E. Traffic railing joints as per the Design Standard. Indicate type of joint and spacing. Reference the applicable Design Standard.

F. Dimension of overall width, roadway width, median location, length of spans, and overall length of bridge.

G. Phase construction limits. Show dimensions and indicate which phase each portion of the superstructure is to be constructed.

H. Outlines of diaphragms with dimensions.

I. Underdeck lighting.

J. Light pole pedestal. Reference the applicable Design Standard.

K. Scuppers and deck drains.

L. Expansion joint blockouts.

M. Traffic railing longitudinal steel. Reference applicable traffic railing Design Standard.

N. Include mass concrete, admixture requirements, etc. consistent with the requirements stated in the General Notes. This information may be included on the superstructure plan sheet or detail sheet.

O. Pouring sequence. Indicate direction of pour. This can be shown on a separate sheet if necessary.

P. Longitudinal length along Station Line and copings. Show location and dimensions to PT/PC's. Show radii at copings of curved superstructures.

Q. Show limits of items attached to traffic railings and parapets such as bullet rails, fencing, etc.

15.4 SUPERSTRUCTURE DRAWINGS - SECTION

At a minimum, include the following in the Superstructure Section sheet:

A. Section view of the superstructure. Detail all reinforcement visible in this view. Partial sections are discouraged. Include section at midspan and at bent/pier to show intermediate diaphragm and end diaphragm details respectively.

B. Deck thickness and cross slope. Deck thickness and reinforcement clearances are measured normal to the deck.

C. Connection between existing and proposed decks for bridge widenings. Indicate which phase of construction the superstructure will be constructed.

D. Vertical traffic/pedestrian railing reinforcement to be cast into deck. Detail longitudinal deck steel to tie in with vertical traffic railing reinforcement. Reference applicable traffic/pedestrian railing Design Standard for longitudinal reinforcement requirements.

E. Traffic separator. Show the separator and reference the appropriate ***Design Standards*** for connection details and options.

F. Show V-groove drip edge at deck coping.

G. Beam/girder spacing. Dimension deck overhang.

H. Longitudinal closure pour locations. Include dimension(s) to a known point of reference such as a beam line, gutter line, etc.

I. Depth of girder haunch for steel girders. Do not show a dimension for prestressed beam build-up.

J. Label the Profile Grade Point. Reference dimensions to Station Line. Use the same Station Line as used in the Plan and Elevation sheet unless other considerations make this impractical.

15.5 SUPERSTRUCTURE DRAWINGS - DETAILS (Rev. 01/17)

The Superstructure Details sheets show detailing information required to construct the superstructure. This will include reinforcement details, form placement details, deck casting sequences, expansion joint information and other ancillary details such as utility hangers and traffic signal and sign support attachment details. For an example illustrating the content and format of a completed Superstructure Detail sheet, see the ***Structures Detailing Manual Examples***. At a minimum, include the following in the Superstructure Details sheets:

A. Section views of the superstructure as required. Detail all reinforcement visible in this view.

B. Utility hanger details. Include details showing utility passing through diaphragms. Show expansion sleeve details where required.

C. Expansion joint details.

D. Stay-in-place form details. See Figure 15.8-3, Figure 15.9-3, Figure 15.9-4, Figure 15.9-5 and Figure 15.9-6.

E. Thickened deck end detail. Show section and plan view. Use the standard dimension and reinforcement details shown in Figure 15.5-1and Figure 15.5-2. Show top mat of reinforcement above top layer of thickened deck end reinforcement.

Figure 15.5-1 Thickened Deck End Details

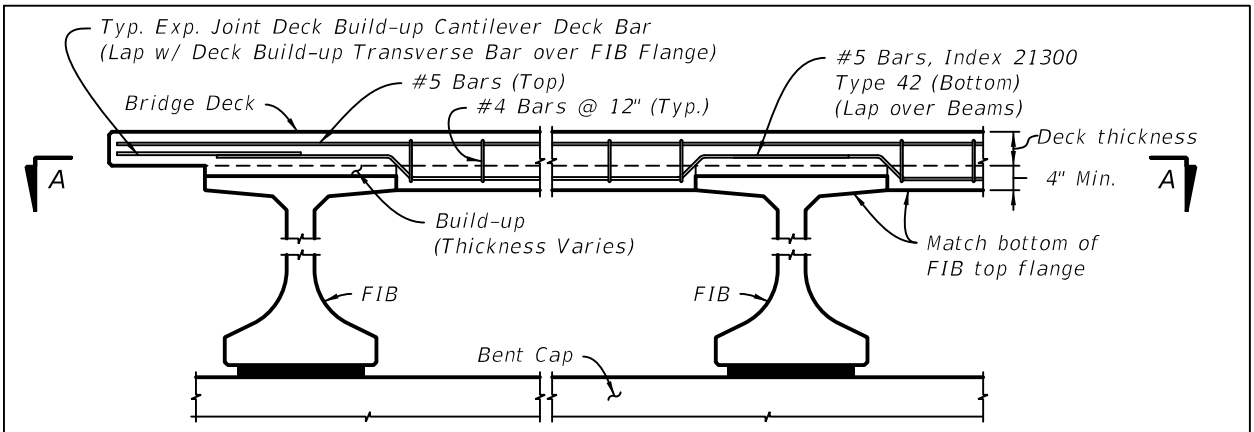

PARTIAL SECTION AT THICKENED DECK END

Deck Reinforcement not shown for clarity.

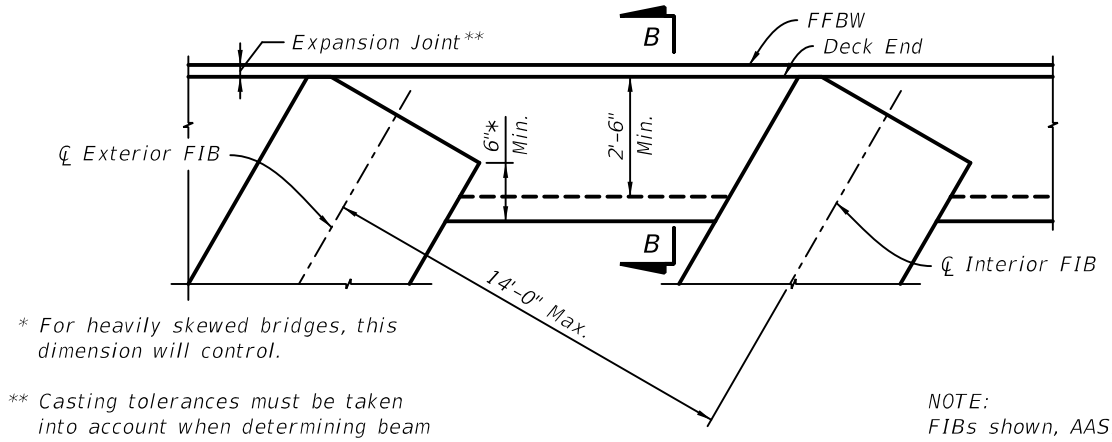

* For heavily skewed bridges, this dimension will control.

** Casting tolerances must be taken into account when determining beam length and expansion joint opening.

NOTE:
FIBs shown, AASHTO Type IIs similar.

SECTION A-A

Reinforcement not shown for clarity.

‡ Placed parallel to skew. Combine with Deck Reinforcement to provide a total longitudinal top mat Area of Steel ≥ 2.48 in² within the bounds of the Thickened Deck End.

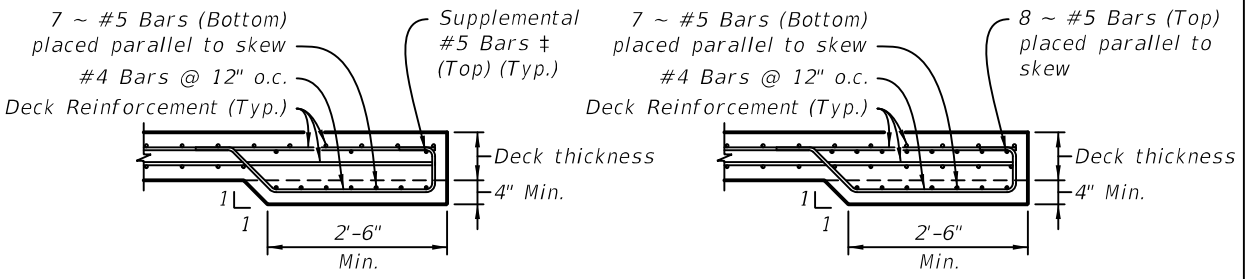

CASE 1 - BRIDGE SKEW ≤ 15 DEGREES

CASE 2 - BRIDGE SKEW > 15 DEGREES

SECTION B-B

Design Assumptions: Detail is applicable for a 2'-6" wide thickened end deck with a maximum bridge skew angle of 35°. For Thickened End Decks wider than 2'-6" use additional reinforcing bars at similar spacing. All designs are project specific and must be confirmed by the EOR.

Figure 15.5-2 Thickened Deck End at Interior Support

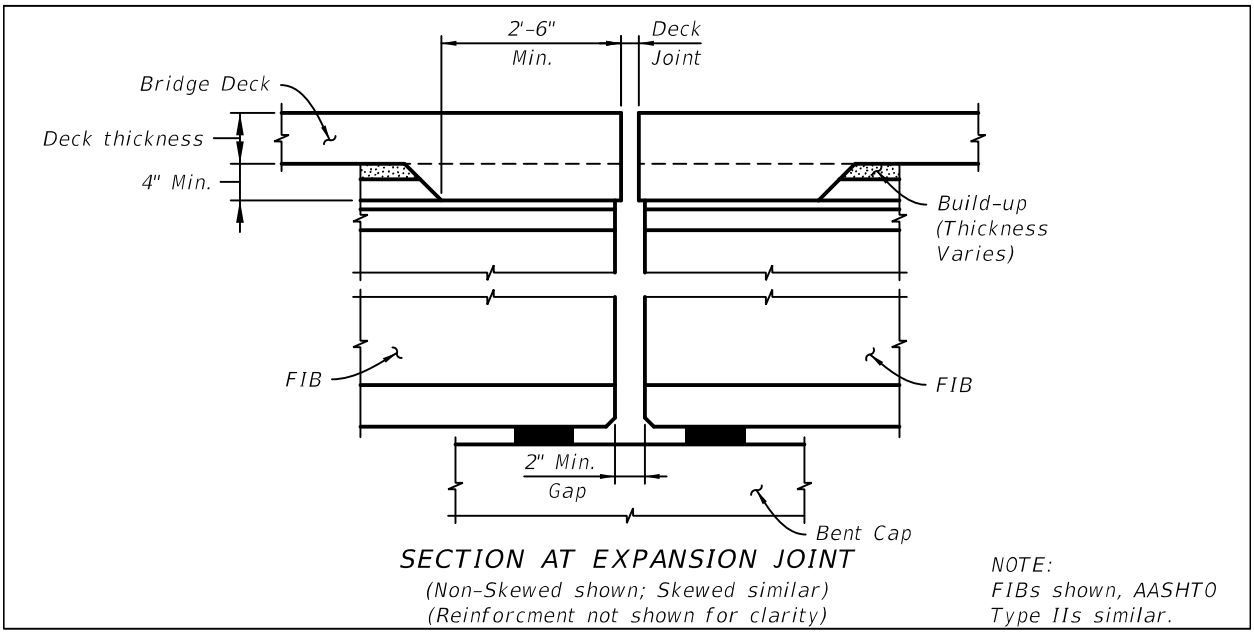

F. Sections through diaphragms at piers and end bents. Detail reinforcement, expansion joints, construction joints and control joints. Include compressible material if cast back-to-back (such as two or more layers of 30lb felt paper) between adjacent diaphragms at interior supports. Show dimension between adjacent diaphragms at expansion joints. Coordinate with expansion joint details.

G. Section through intermediate diaphragms. Detail reinforcement to avoid conflicts with deck steel.

H. Jacking locations (where applicable). Show jacking service loads in tabular format.

I. Thickened deck details at deck drains. See ***SDM*** 22.2.

J. Drain, scupper and downspout details. See ***SDM*** 22.2.

K. Complete the 'TABLE OF PRESTRESSED I-BEAM TEMPORARY BRACING MINIMUM REQUIREMENTS AND LOADS' as follows and include it in the plans.

Span No.: Indicate the span number.

Beam No.: Indicate the individual beam number or for simplicity use “All” when appropriate.

Stage 1:

Brace Ends Prior to Crane Release: Indicate yes or no.

Stage 2:

Total Lines of Bracing: Indicate the total number of lines of uniformly spaced bracing required per beam, including end bracing.

Minimum Number of Adjacent Beams Erected within 24 hours: Indicate the minimum number of beams that must be erected to be consistent with the bracing design assumptions, see ***SDG*** 4.3.4.B.

Horizontal Load at Each Brace: Indicate the ***LRFD*** Strength III horizontal load at each brace (kips).

Stage 3:

Total Lines of Bracing: Indicate the total number of lines of uniformly spaced bracing required per beam, including end bracing, not less than Stage 2 requirements.

Overturning Moment at Each Brace: Indicate the ***LRFD*** Strength I overturning moment at each brace (kip-ft).

Figure 15.5-3 Table of Prestressed I-Beam Temporary Bracing Minimum Requirements and Loads

PRESTRESSED BEAM STABILITY AND TEMPORARY BRACING NOTES:
1. Ensure beam stability and design temporary beam bracing, including connections, in accordance with the Specifications and the FDOT Structures Manual.
2. Construction:
   a. Evaluate the beam stability and bracing requirements against the design assumptions including:
      i. Loadings given in the plans.
      ii. Beam Camber (less than 6 inches) and Beam Sweep (in compliance with Specification 450 requirements).
      iii. Bearings given in the plans.
   b. Securely connect bracing to each beam. Do not allow the bracing to exert any vertical force on the outer edge of the top flange. Preform all bolt holes in beams and fill after use in accordance with the Specifications.

TABLE OF PRESTRESSED I-BEAM TEMPORARY BRACING MINIMUM REQUIREMENTS AND LOADS							Table Date 8-05-15
		STAGE 1	STAGE 2			STAGE 3	
SPAN NO.	BEAM NO.	BRACE ENDS PRIOR TO CRANE RELEASE?[1] (YES/NO)	TOTAL LINES OF BRACING[2,3,7]	MINIMUM NUMBER OF ADJACENT BEAMS ERECTED	HORIZONTAL LOAD AT EACH BRACE[4] (KIP)	TOTAL LINES OF BRACING[3,5,7]	OVERTURNING MOMENT AT EACH BRACE[6] (KIP-FT)

1. Anchor Bracing loads to be determined by the Contractor.
2. Total lines of Stage 2 bracing, including end bracing, are required to be installed within 24 hours after initial beam placement.
3. Equally space bracing along the length of the beams allowing for variations due connection conflicts and skew.
4. LRFD Strength III loads applied to beam at brace point (see SDG 11.6).
5. Total lines of Stage 3 bracing, including end bracing, are required to be installed prior to deck placement.
6. LRFD Strength I overturning moment applied to beam at brace point (see SDG 11.6).
7. Submit shop drawings for temporary bracing plan including locations of preformed beam holes/inserts.

L. Deck casting sequences. See Figures 15.5-4 and 15.5-5 and ***SDG*** 4.2.

Figure 15.5-4 Deck Casting Sequence - Simple Span Prestressed Concrete Beams

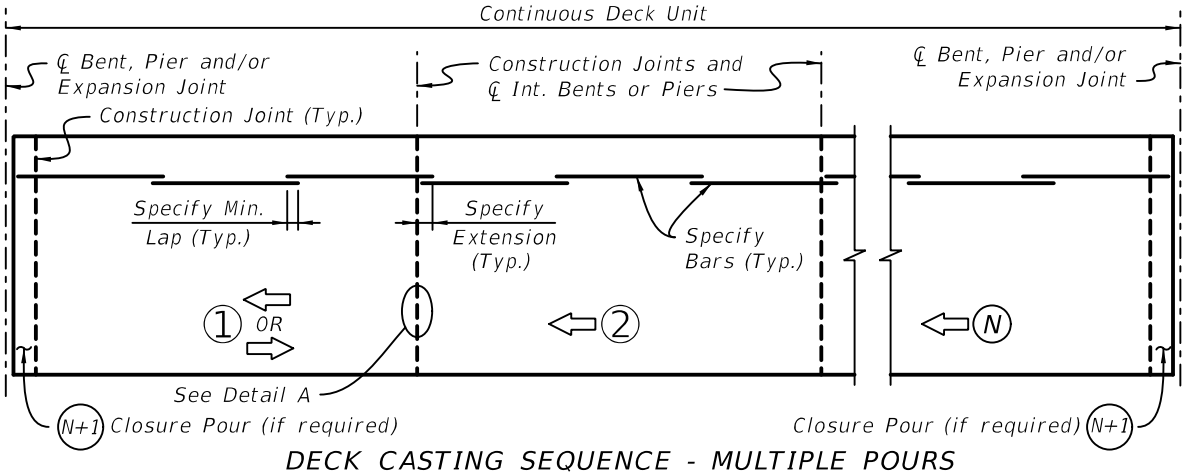

DECK CASTING SEQUENCE - MULTIPLE POURS

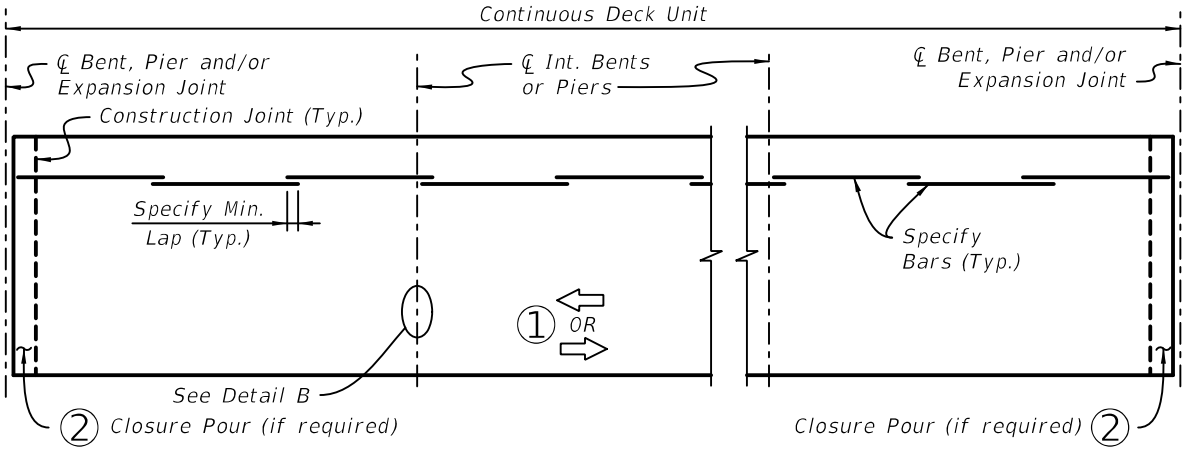

DECK CASTING SEQUENCE - SINGLE POUR

NOTES:
1. At the Contractor's option, either Deck Casting Sequence may be used.
2. A minimum of 72 hours is required between adjacent pours in a given continuous deck unit.
3. Fill Tooled V-groove with Type D sealant per Specifications Section 932. Groove shall be clean and free of grease and debris before filling.

LEGEND:

N = Pour Number

⇦ = Direction of Pour

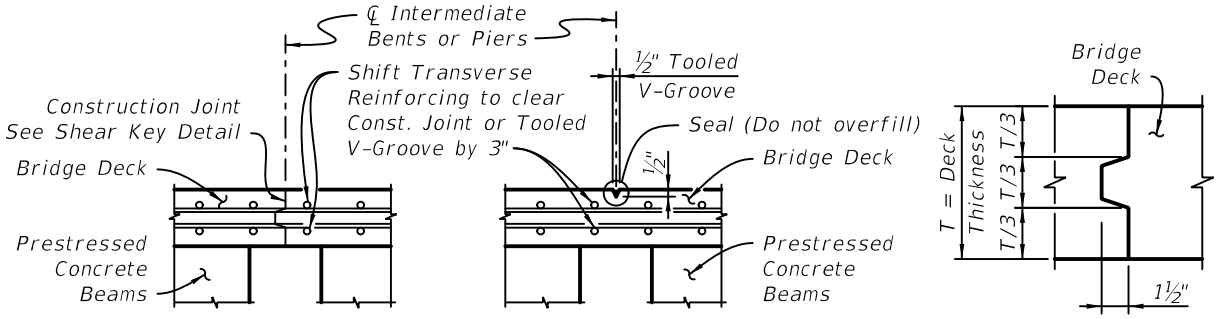

DETAIL A DETAIL B SHEAR KEY DETAIL

(BEAMS WITHOUT END DIAPHRAGMS SHOWN; WITH END DIAPHRAGMS SIMILAR)

Commentary: To reduce cracking in the deck over the support, the direction of pour is oriented towards the previously placed span so that the beams are loaded prior to pouring the section of the deck next to the previously placed span where the longitudinal reinforcing steel is continuous over the supports.

It is important that the concrete design mix remains plastic throughout the concrete placement especially in the case where a single pour is placed in one direction to allow for beam deflection after the concrete is initially placed and screeded.

Figure 15.5-5 Deck Casting Sequence - Continuous Beams and Girders

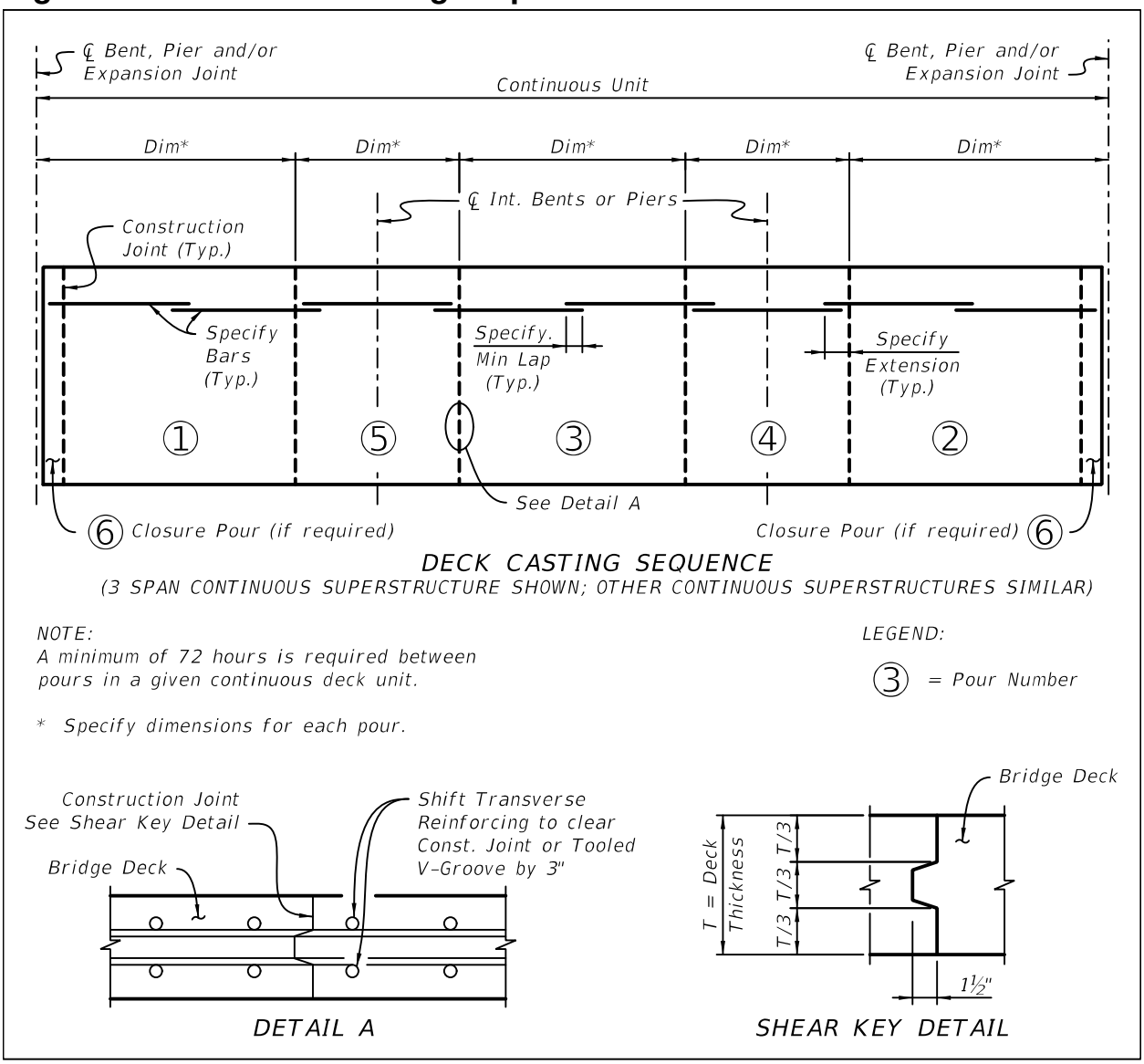

15.6 DECK DRAINS

Avoid the use of deck drains on bridges wherever possible. In situations where the use of deck drains is required, fully detail all aspects of the storm drain system including inlets, scuppers, conveyance pipes and attachments to the bridge. On bridges that require storm drain systems, develop details early in the design phase to avoid conflicts once member sizes and reinforcing schemes have been developed. See ***PPM*** Vol. 1 Chapter 26 for phase submittal requirements. See ***SDM*** Chapter 22 for additional drainage requirements on bridges.

15.7 SUPERSTRUCTURE DESIGN CONSIDERATIONS - GENERAL

The bridge superstructure requires a considerable amount of design and detailing to be easily constructed. Incorporate the following design considerations to produce a more constructible, economical design:

A. Maximize the clear distance between mats of steel by using No. 5 rebar and tightening spacing, if possible. This must be balanced with reinforcement spacing minimum requirements.

B. For cross sections with a slope break point, do not specify a straight bar in the bar list with an indication to field bend as necessary. Instead, calculate the angle and call for the appropriate bar type in the bar list.

C. Design bridge deck reinforcement so that transverse main steel is on the exterior of each mat. Distribution steel should be on the interior of each mat.

D. Detail closure pours where required considering differential deflection between phases/adjacent beams. Closure pours should be a minimum of 2 feet wide.

15.8 SUPERSTRUCTURE DESIGN CONSIDERATIONS - PRESTRESSED BEAMS (Rev. 01/17)

In addition to the applicable sections above, address the following issues when designing and detailing prestressed concrete beam superstructures:

A. When diaphragms are required, detail these areas in the plans to ensure that there are no conflicts between diaphragm reinforcement and deck reinforcement. Include diaphragm reinforcement in the bar list.

B. Partial depth diaphragms may be utilized with a Florida-I beam superstructure. In each diaphragm, at a minimum, show one vertical column of #5 bars threaded into inserts cast into the beam(s). Show insert layout in the framing plan. See applicable beam Design Standard for vertical spacing of inserts. See Figure 15.8-1 and Figure 15.8-2 for details. Details shown are minimum dimensions and reinforcing. Diaphragm dimensions and reinforcing layout can be modified when required by analysis.

Commentary: If the purpose of the diaphragm is to transfer lateral loads, diaphragms must be designed to resist these forces and to transfer these forces to the bearings and to the substructure.

C. Add a plan note to alert the beam fabricator to see Framing Plan sheet(s) for insert spacing and layout when intermediate diaphragms are required in the span.

D. See ***SDG*** 4.2 for deck pouring sequence requirements.

E. Show stay-in-place (S.I.P) form details. See Figure 15.8-3 for S.I.P. details related to prestressed-beam superstructures.

F. See ***SDG*** 4.3.1 for the treatment of beam ends. See Figure 15.8-4, Figure 15.8-5 and Figure 15.8-6 for details related to the squaring of beam ends. See Figure 15.8-7 for additional details required for use with non-cellular SIP Metal Deck Forms.

Figure 15.8-1 Concrete End Diaphragm Details

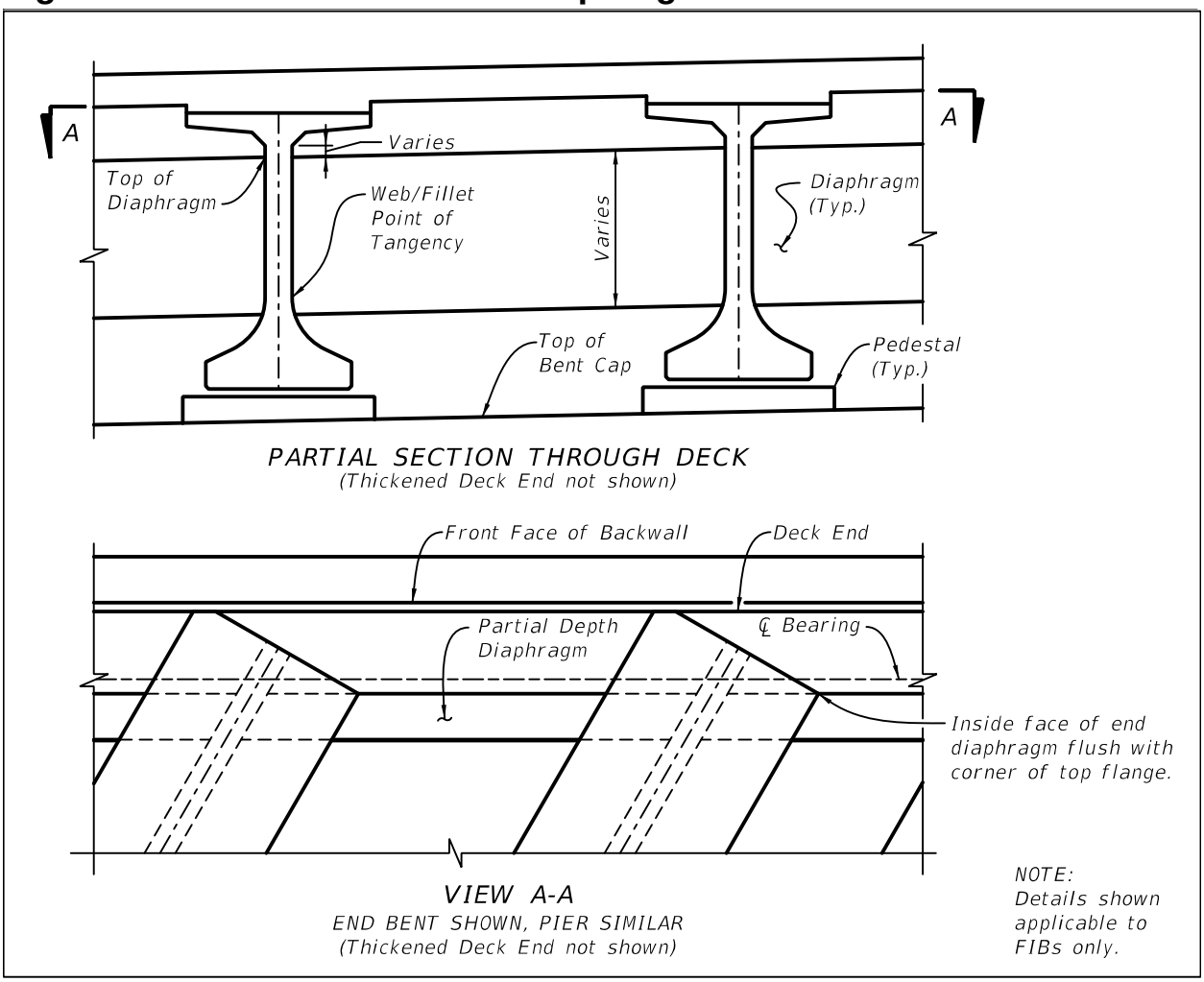

Figure 15.8-2 Concrete End Diaphragm Reinforcement Details

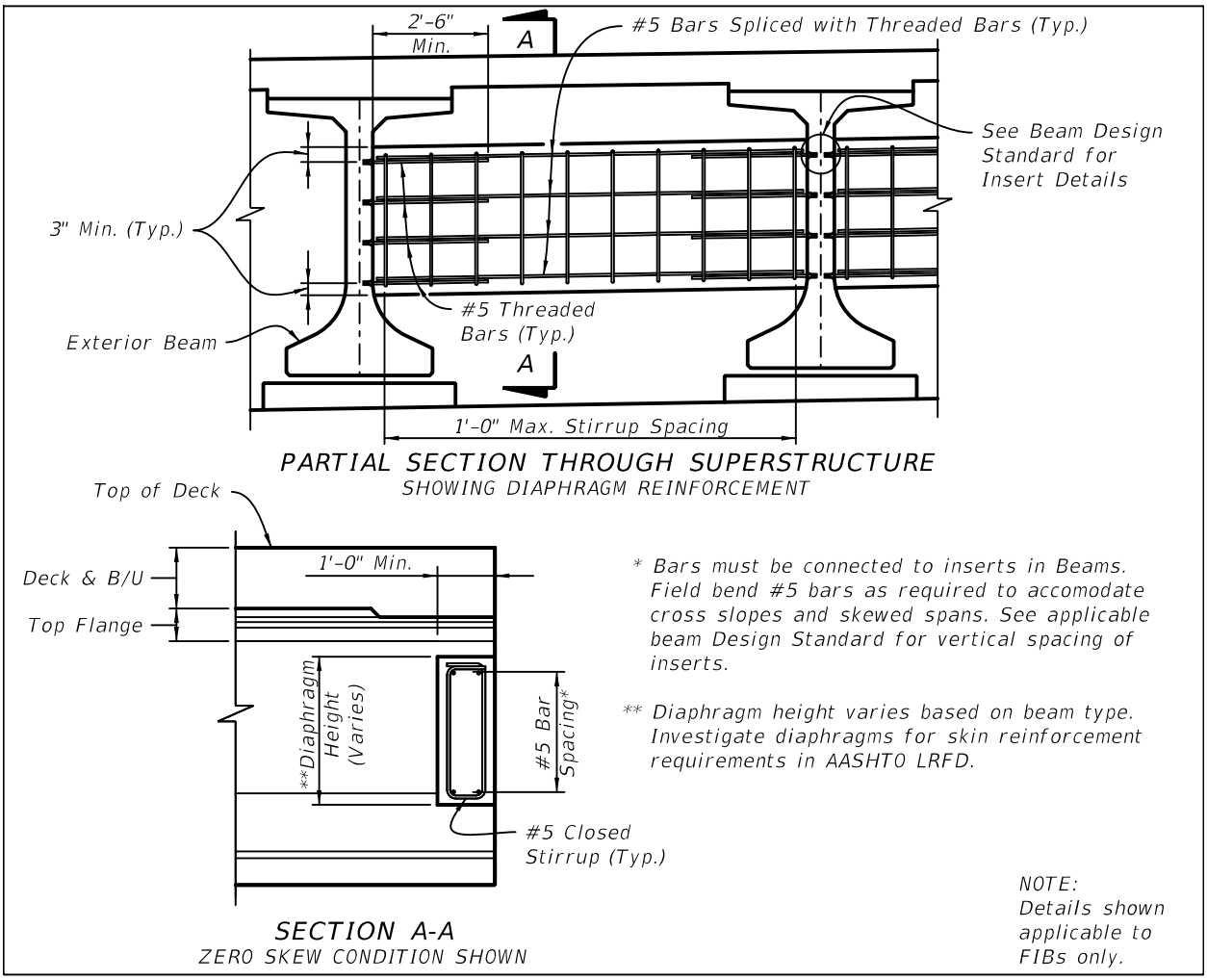

Figure 15.8-3 S.I.P. Form Details for Prestressed Concrete Beams

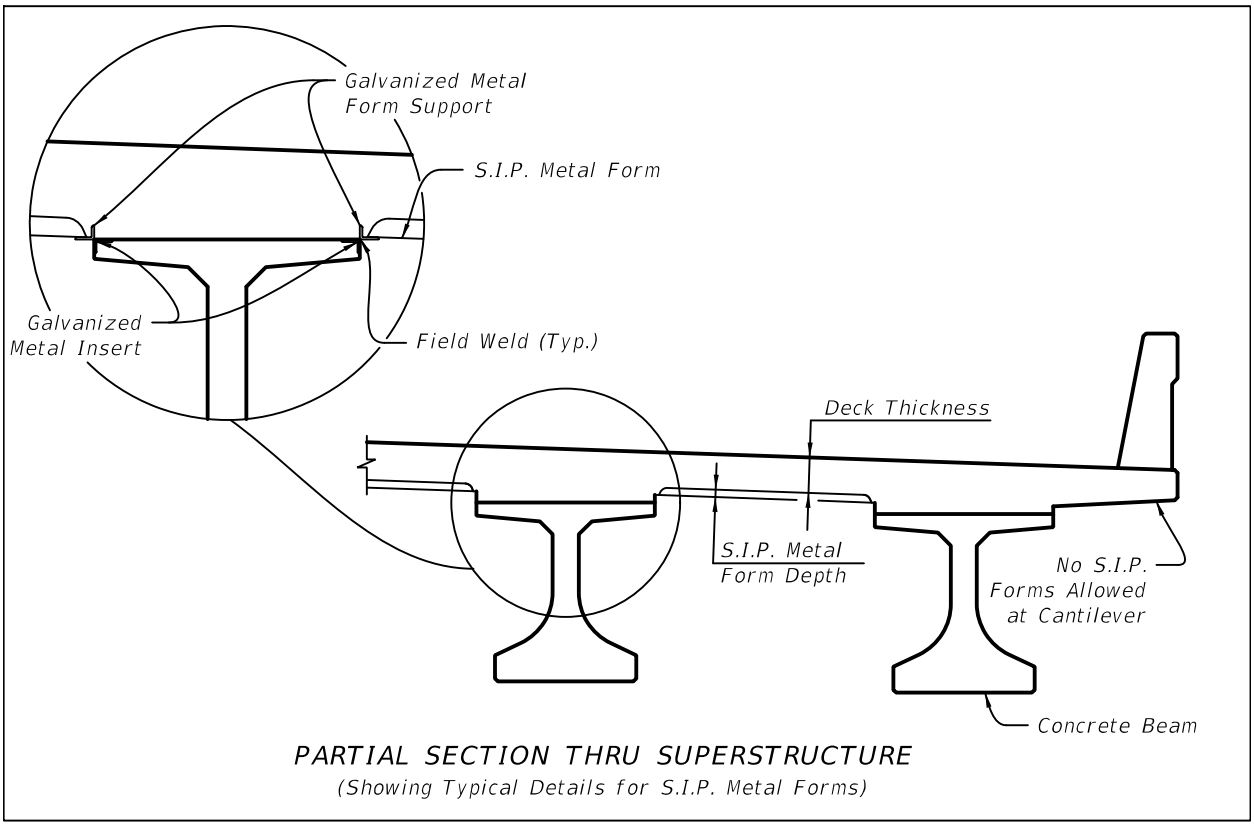

Figure 15.8-4 Squared Beam End Details – Exp. Joint at Int. Support

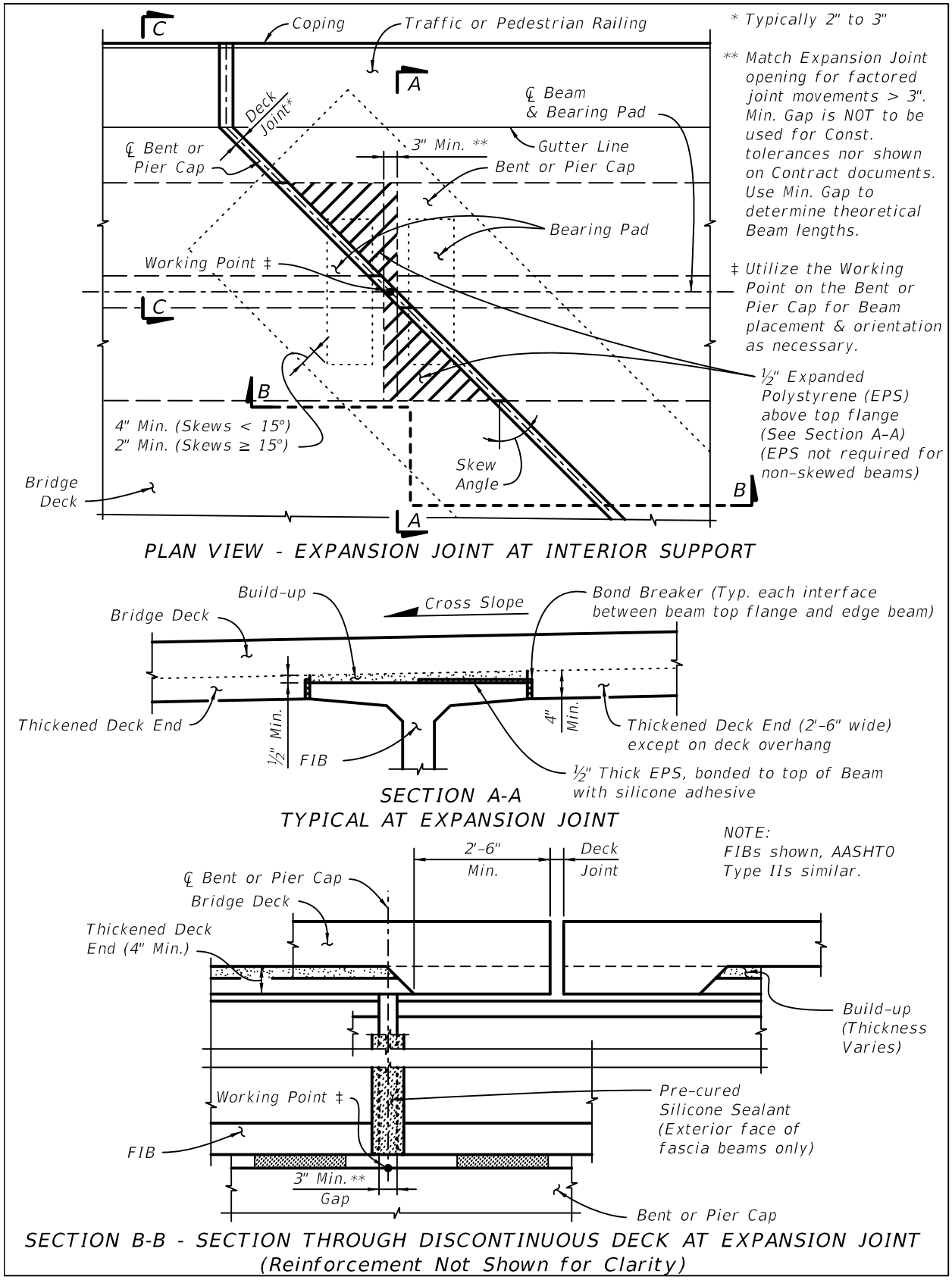

Figure 15.8-5 Squared Beam End Details - Cont. Deck at Int. Support

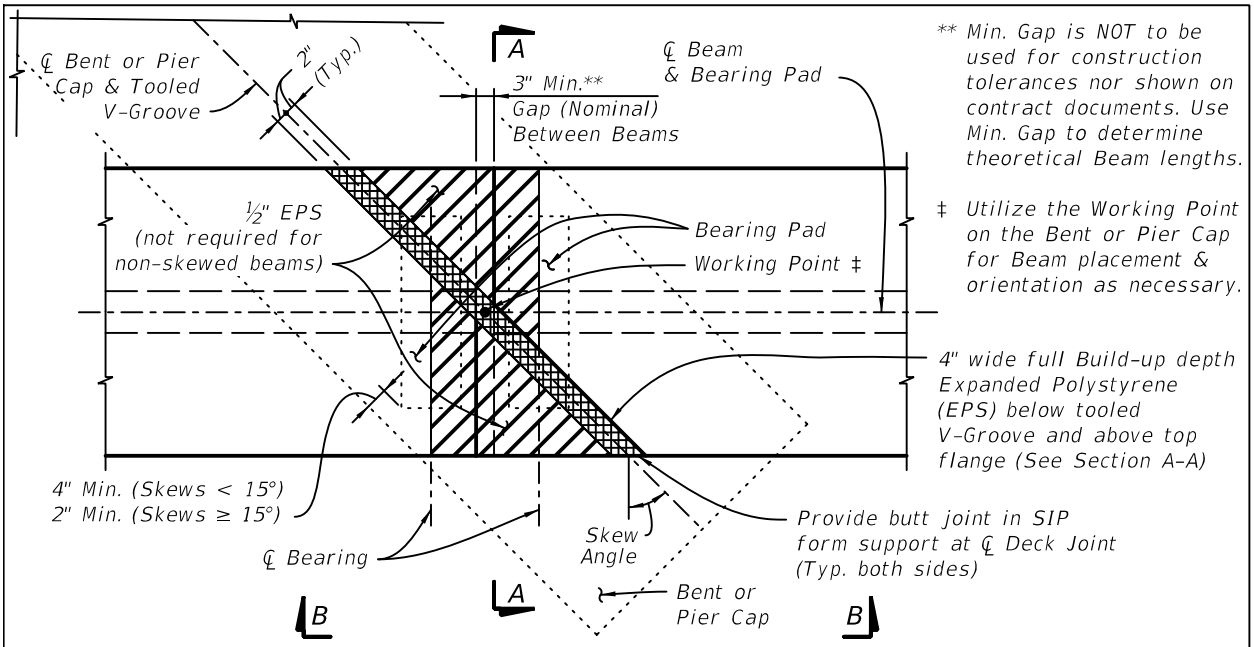

PLAN VIEW - CONTINUOUS DECK AT INTERIOR SUPPORT
(Bridge Deck Not Shown For Clarity; Skewed Condtion shown, Non-Skewed similar)

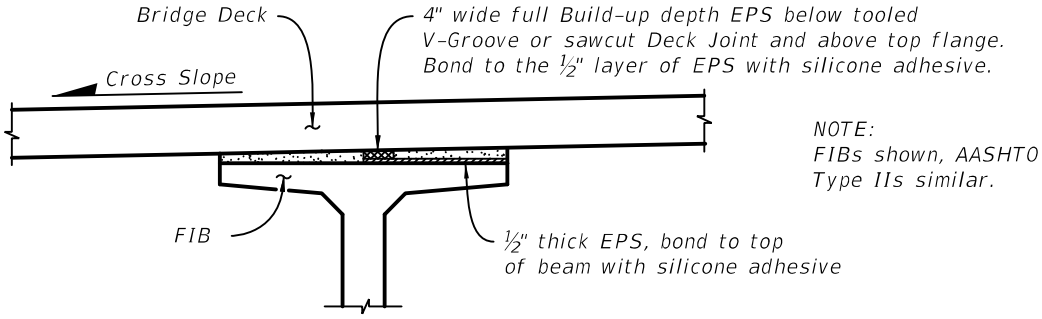

SECTION A-A - TYPICAL SECTION AT CONTINUOUS DECK TOOLED OR SAWCUT JOINT

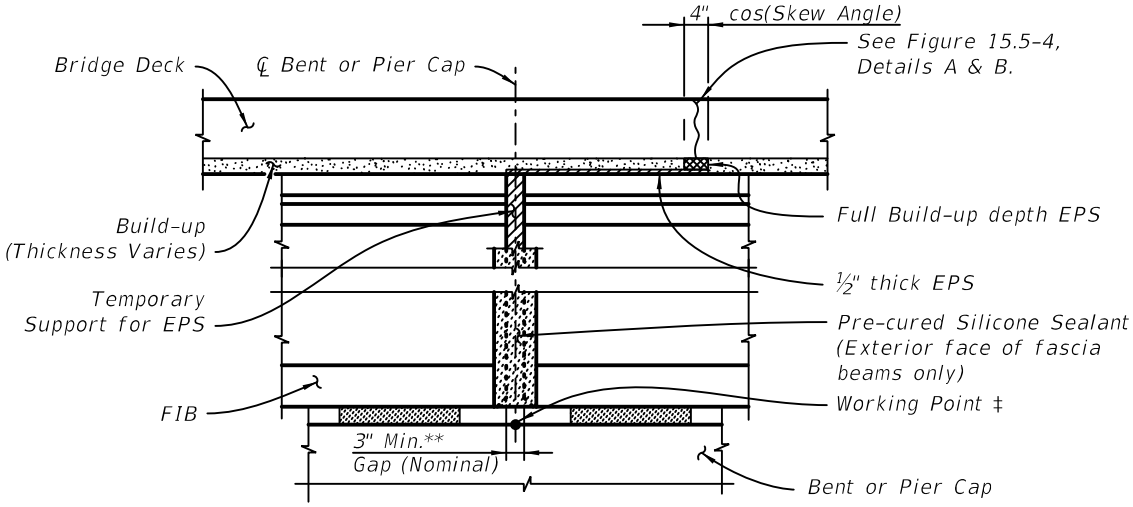

VIEW B-B - ELEVATION OF CONTINUOUS DECK AT INTERIOR SUPPORT

Figure 15.8-6 Squared Beam End Details - Expansion Joint at End Bent

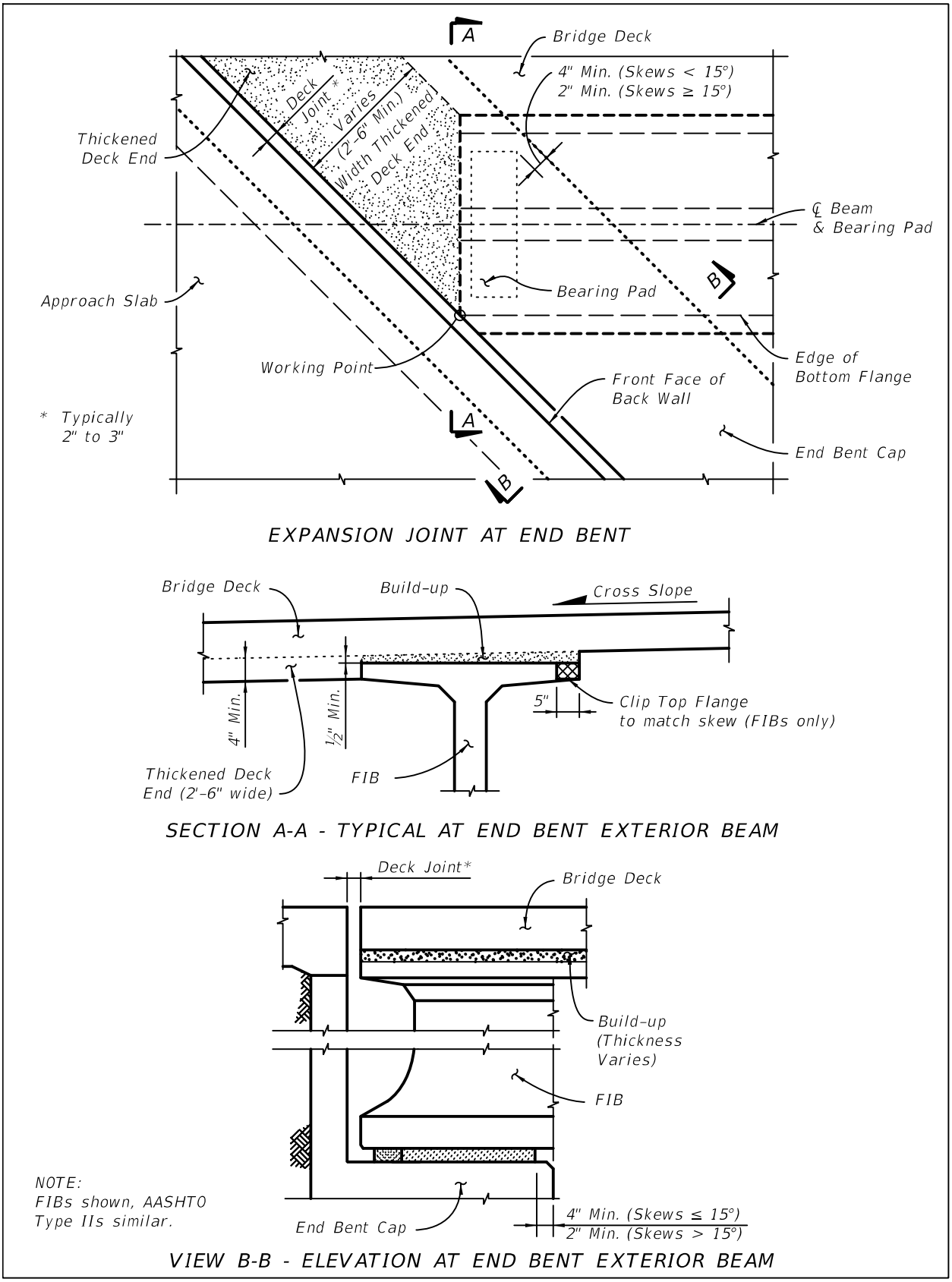

Figure 15.8-7 SIP Form Details - Continuous Deck at Int. Support

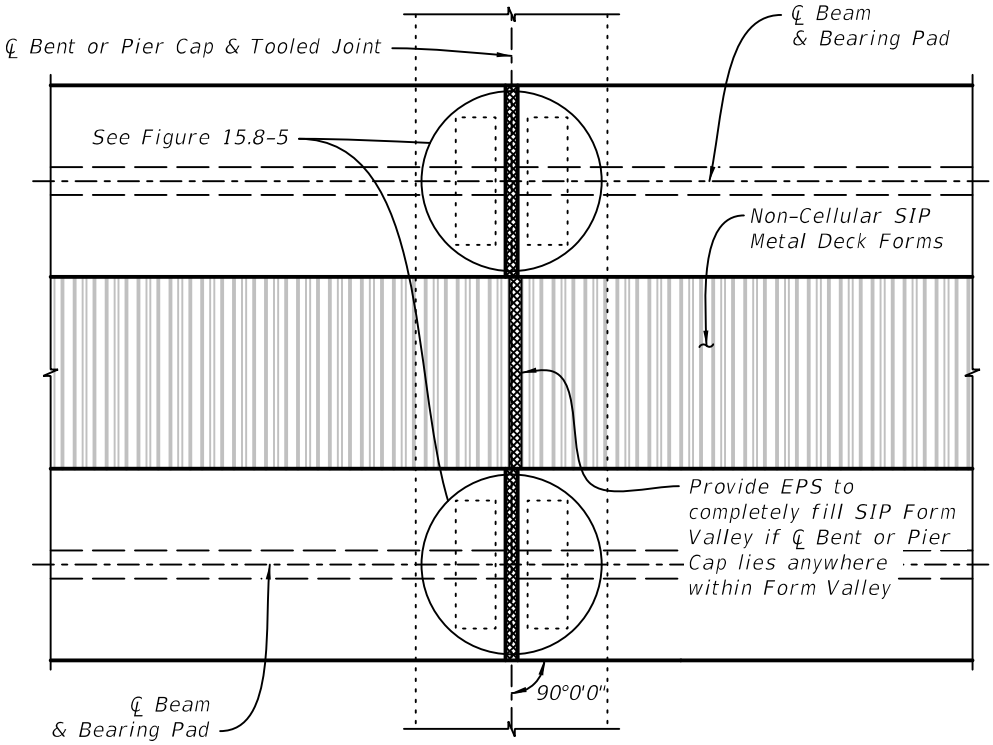

PLAN VIEW - NON-SKEWED CONDITION

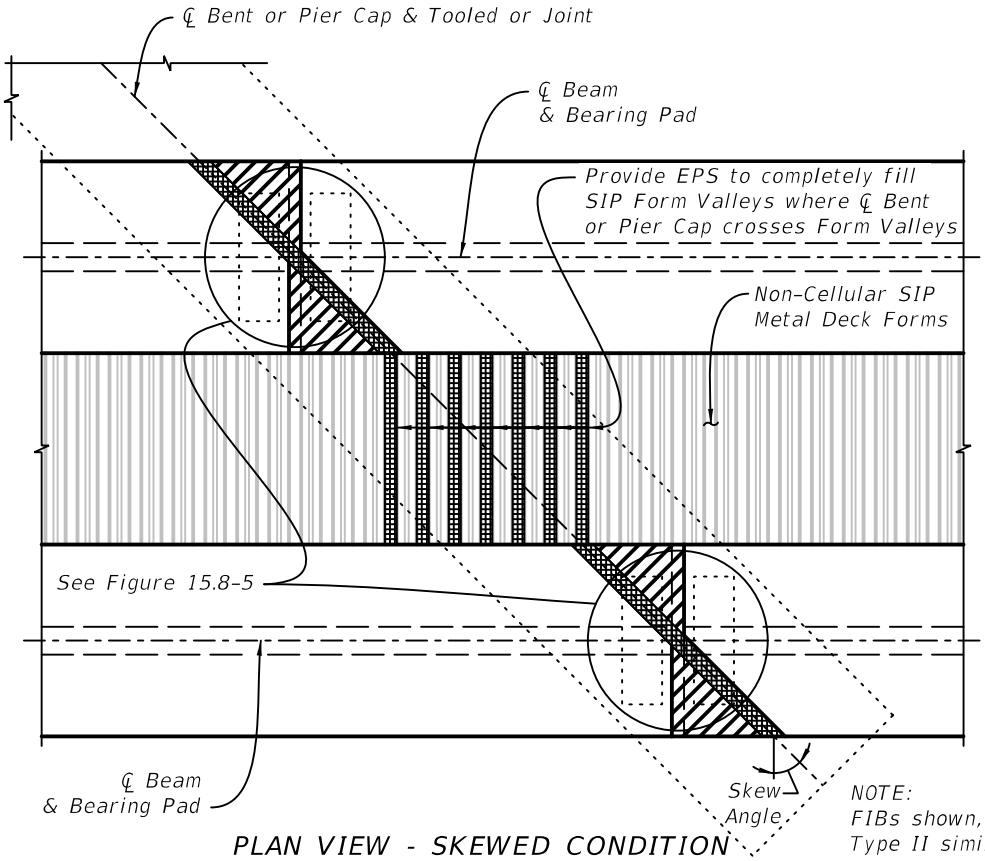

PLAN VIEW - SKEWED CONDITION

15.9 SUPERSTRUCTURE DESIGN CONSIDERATIONS - STEEL GIRDERS (Rev. 01/17)

In addition to the applicable sections above, address the following issues when designing and detailing steel girder superstructures:

A. Design edge beam at ends of spans or continuous units to transmit wheel loads into end crossframe. See Figure 15.9-1.

Figure 15.9-1 Edge Beam Detail - Steel Girders

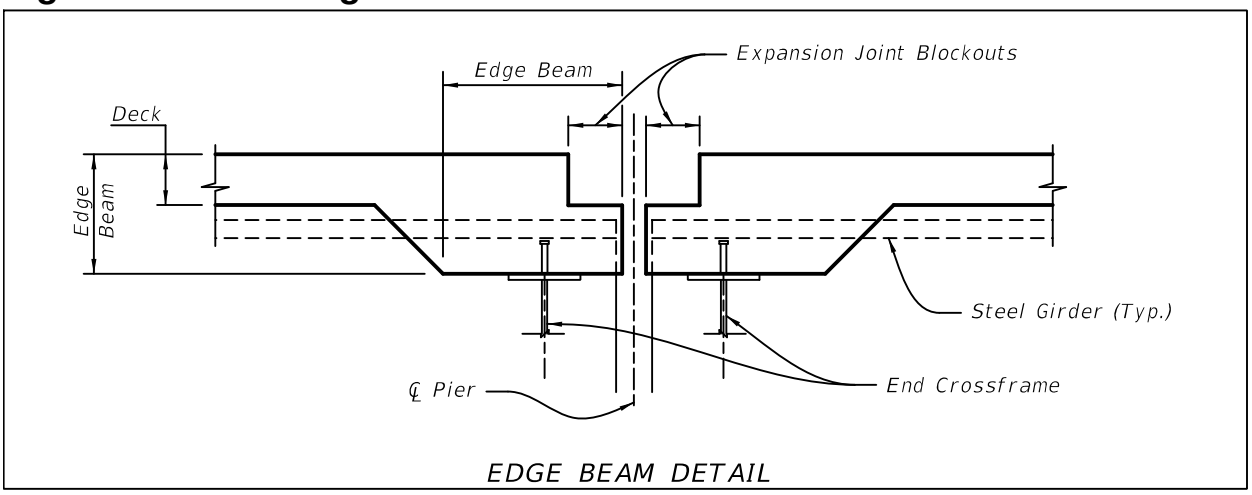

B. Detail deck with a constant-depth haunch within a given continuous unit. Haunch shall be as shown in Figure 15.9-2, measured from the top of the thickest top flange to the bottom of the deck. This depth, in conjunction with the cross slope, must be taken into account when designing shear stud height. Show the dimension from the top of web to the top of deck in the Superstructure Details.

Figure 15.9-2 Haunch Details - Steel Girders

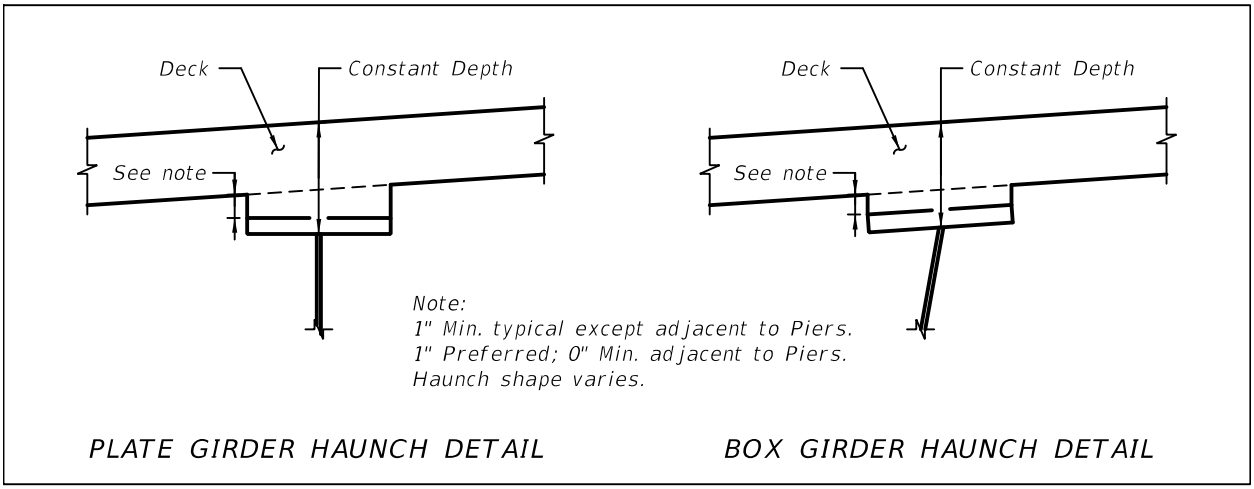

C. Show S.I.P form details. See Figure 15.9-3 and Figure 15.9-4 for I-girder S.I.P. form details and Figure 15.9-5 and Figure 15.9-6 for box girder S.I.P. form details. Stay-in-place forms are required for the interior portion of box girders.

Figure 15.9-3 S.I.P. Form Details for Steel I-Girders (Section)

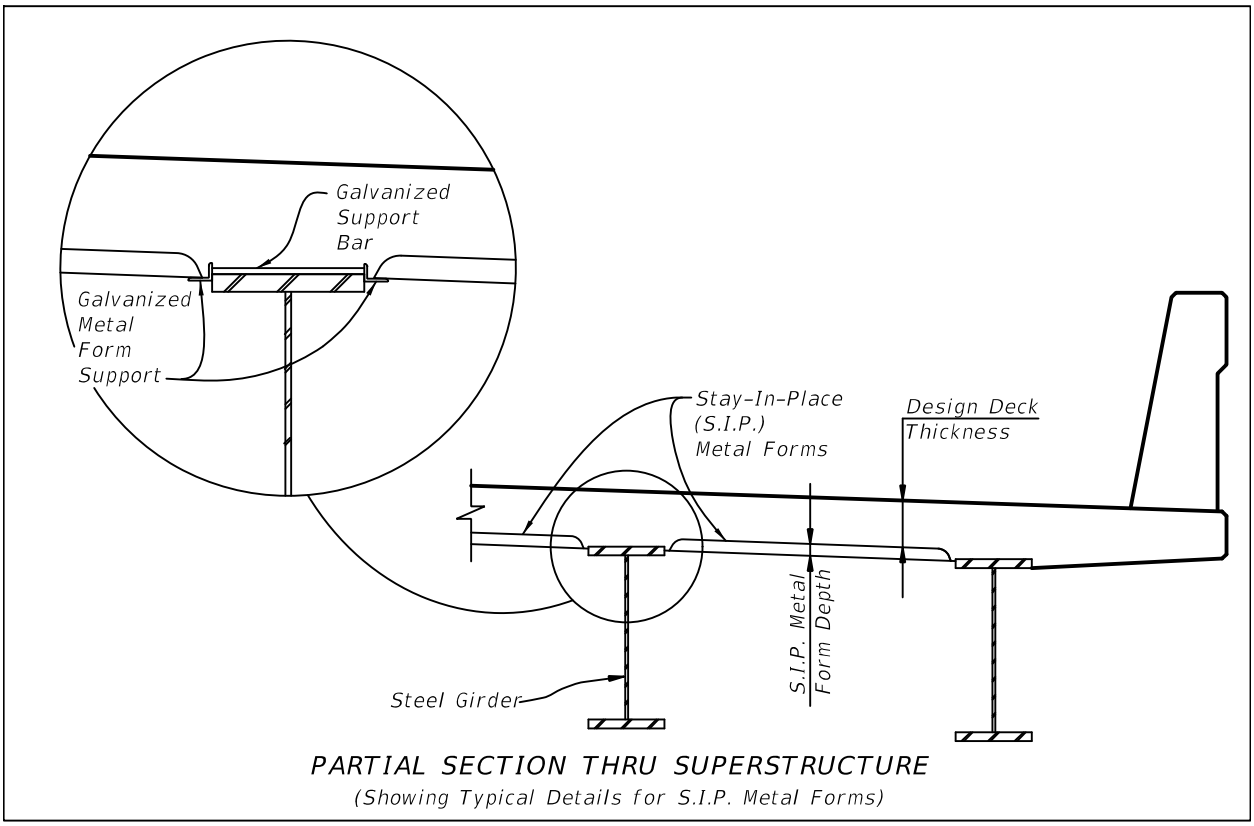

Figure 15.9-4 S.I.P. Form Details for Steel I-Girders (End Detail)

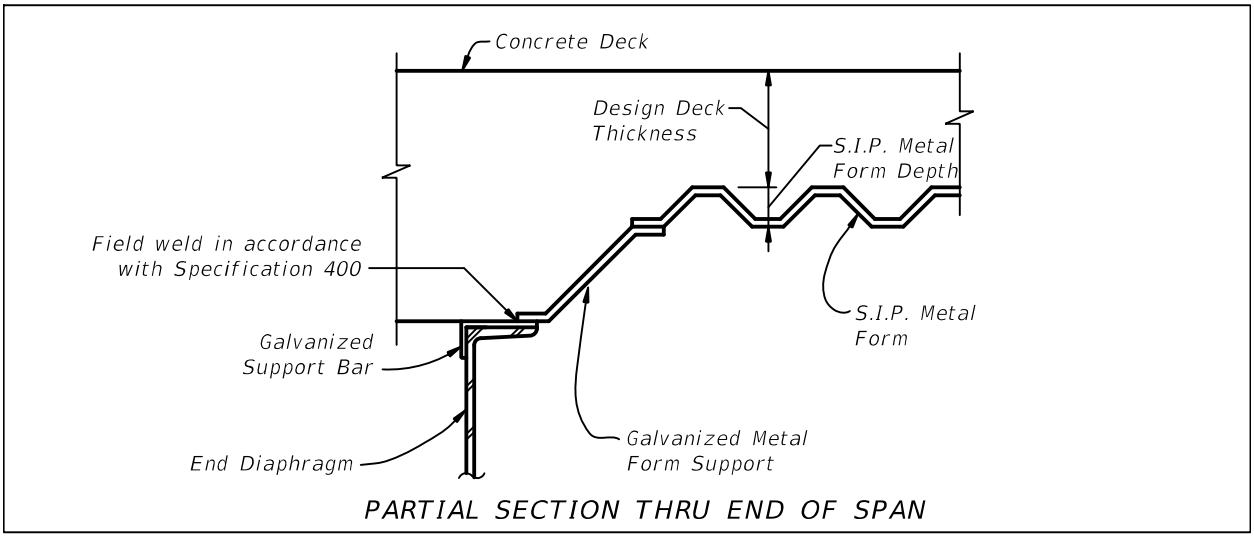

Figure 15.9-5 S.I.P. Form Details for Steel Box Girders (Section)

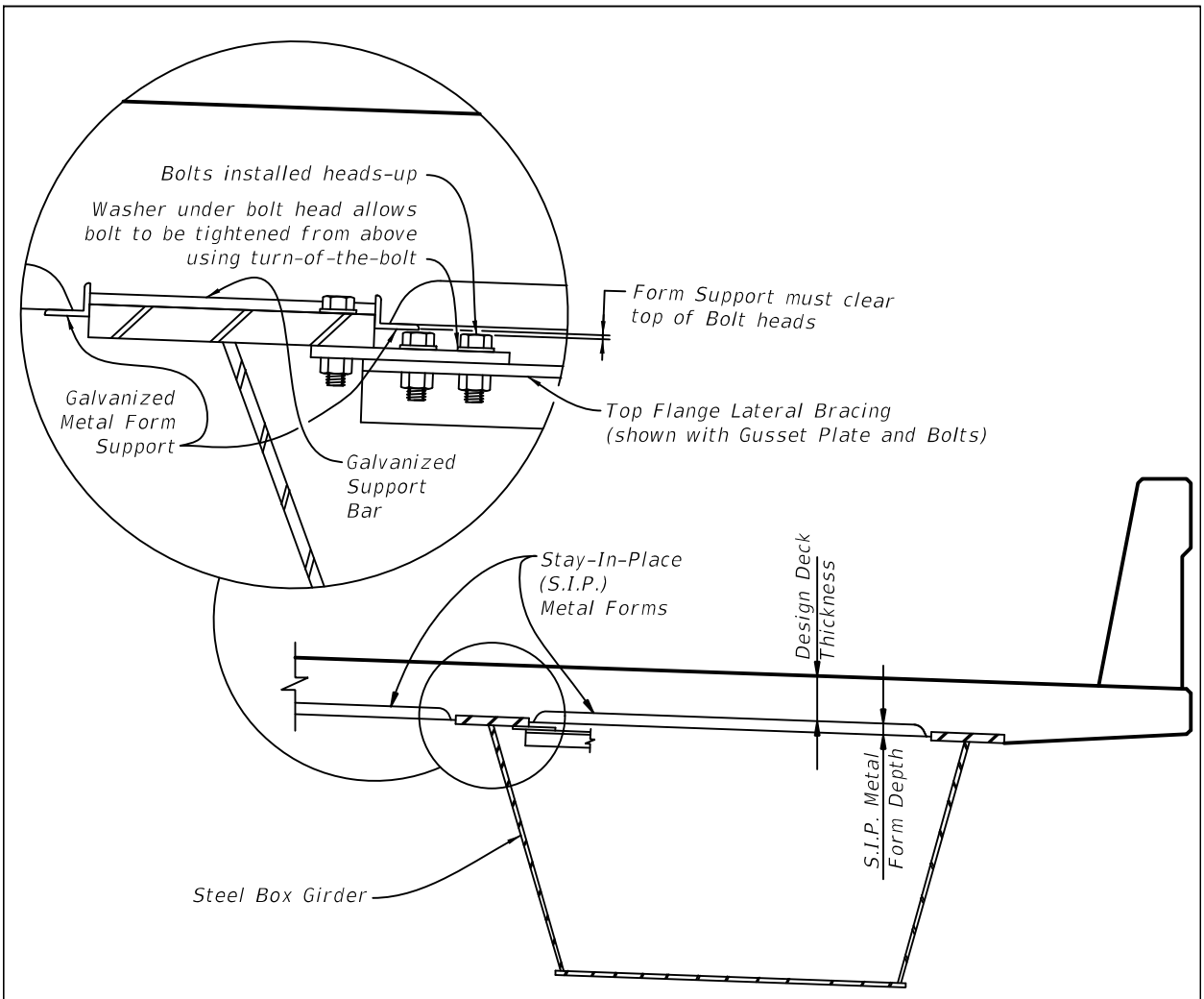

PARTIAL SECTION THRU SUPERSTRUCTURE
(Showing Typical Details for S.I.P. Metal Forms)

Figure 15.9-6 S.I.P. Form Details for Steel Box Girders (End Detail)

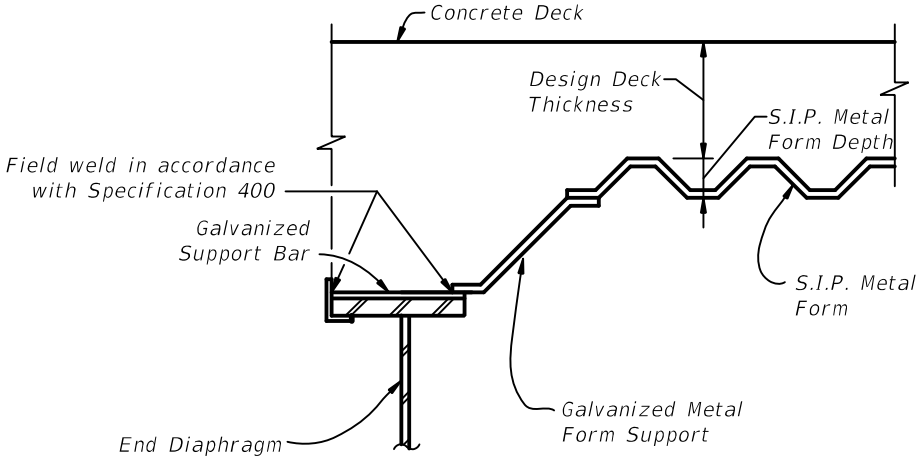

PARTIAL SECTION THRU END OF SPAN

16 STRUCTURAL STEEL GIRDERS

16.1 GENERAL

A. Structural steel drawings and details will be used by fabricators and contractors for the production and erection of structural steel members. This chapter does not cover movable bridges.

B. Refer to the following ***AASHTO/NSBA*** Steel Collaboration Standards (available at http://www.steelbridges.org/) with exceptions as detailed in this chapter:

1. G 1.2 - 2003 Design Drawing Presentation Guidelines
2. G 1.4 - 2006 Guidelines for Design Details
3. G 12.1 - 2003 Guidelines for Design for Constructability

C. Check AISC on-line database of available structural steel shapes before specifying a particular steel shape and size. Preference should be given to shapes and sizes with multiple producers due to increased availability and lower cost.

Modification for Non-Conventional Projects:
Delete ***SDM*** 16.1.C.

16.2 SHOP DRAWINGS

Refer to the following ***AASHTO/NSBA*** Steel Bridge Collaboration Standards for guidance on review and approval of steel shop drawings (available at http://www.steelbridges.org/):

1. G 1.1 - 2000 Shop Detail Drawing Review/Approval Guidelines
2. G 1.3 - 2002 Shop Detail Drawing Presentation Guidelines
3. ***Plans Preparation Manual (PPM)*** - Volume 1, Chapter 28
4. ***FDOT Standard Specifications for Road and Bridge Construction***- Section 5

16.3 FRAMING PLAN DRAWINGS AND DETAILS - STEEL I-GIRDERS

Framing plans are required for all bridges with a steel superstructure. For examples illustrating the content and format of completed Framing Plan sheets, see the ***Structures Detailing Manual Examples***. Provide a framing plan for steel I-girder superstructures showing the following information (see Figure 16.3-1, Figure 16.3-2, Figure 16.3-3 and Figure 16.3-4):

A. Transverse stiffener spacing. Show transverse stiffeners on one side of girder only. Show on inside of exterior girders.

B. Lateral bracing spacing.

C. The distances between girders (centerlines or extensions) measured along the centerline of bearing.

D. The distances from the Station Line to adjacent girders measured along the centerline of bearing

E. Dimension to field splices along centerline girder from centerlines of bearing. Number field splices from left to right. Clearly label optional field splices.

F. Girder radius of curvature for each girder, tabulate if necessary for clarity.

G. Crossframe location. Indicate type of crossframe.

H. Temporary bracing required for construction.
I. Distance from centerline bearing to the FFBW.
J. Girder numbering including span and unit number.
K. Distance between centerlines of bearing.
L. Location of PC/PT along centerline of girders.
M. Direction of stationing.

Figure 16.3-1 I-Girder Framing Plan

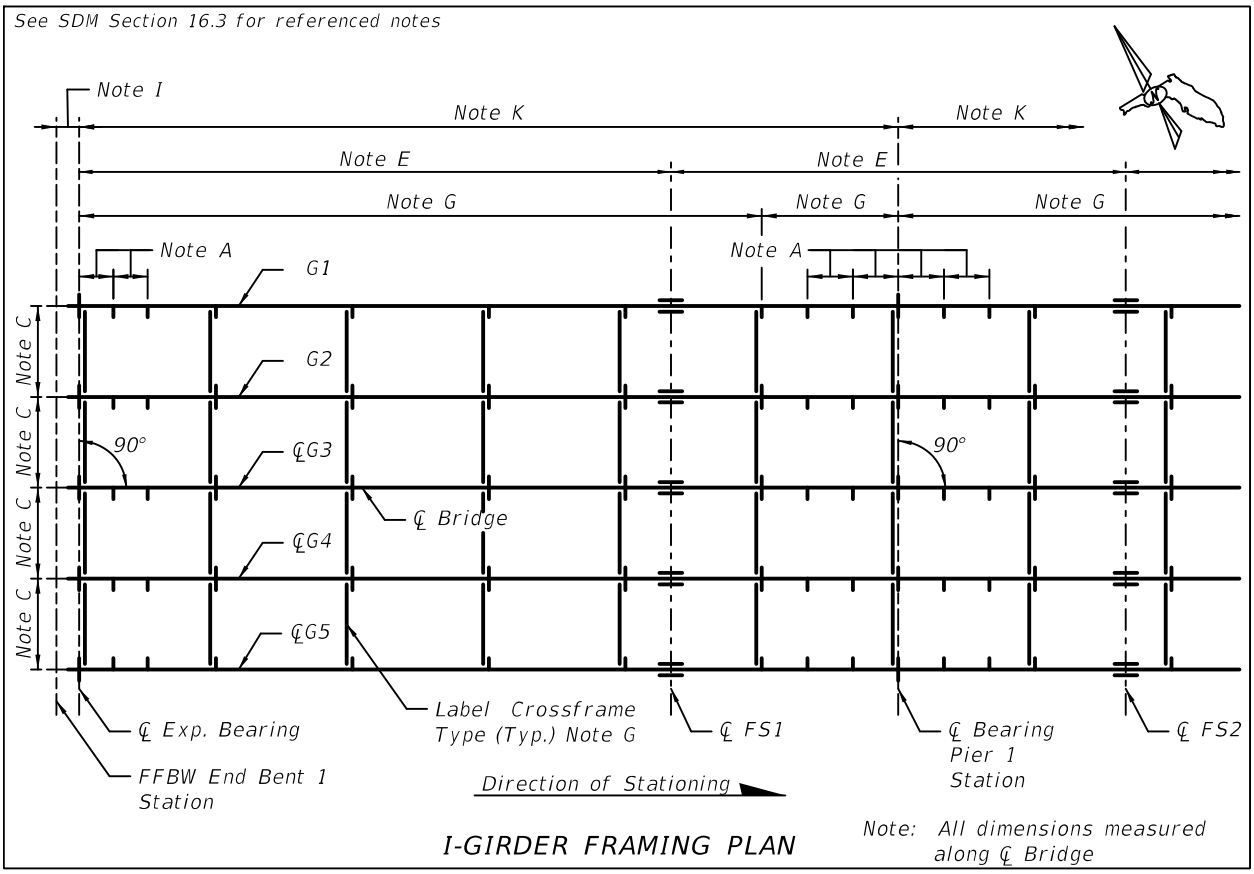

Figure 16.3-2 Framing Plan Details - Large Skews

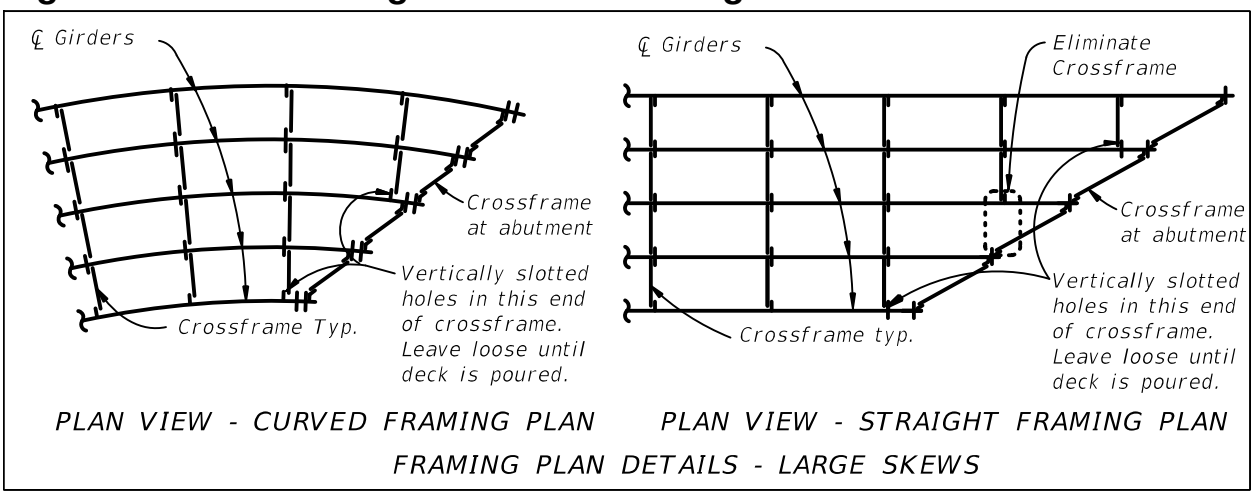

Figure 16.3-3 Framing Plan at Gore Area

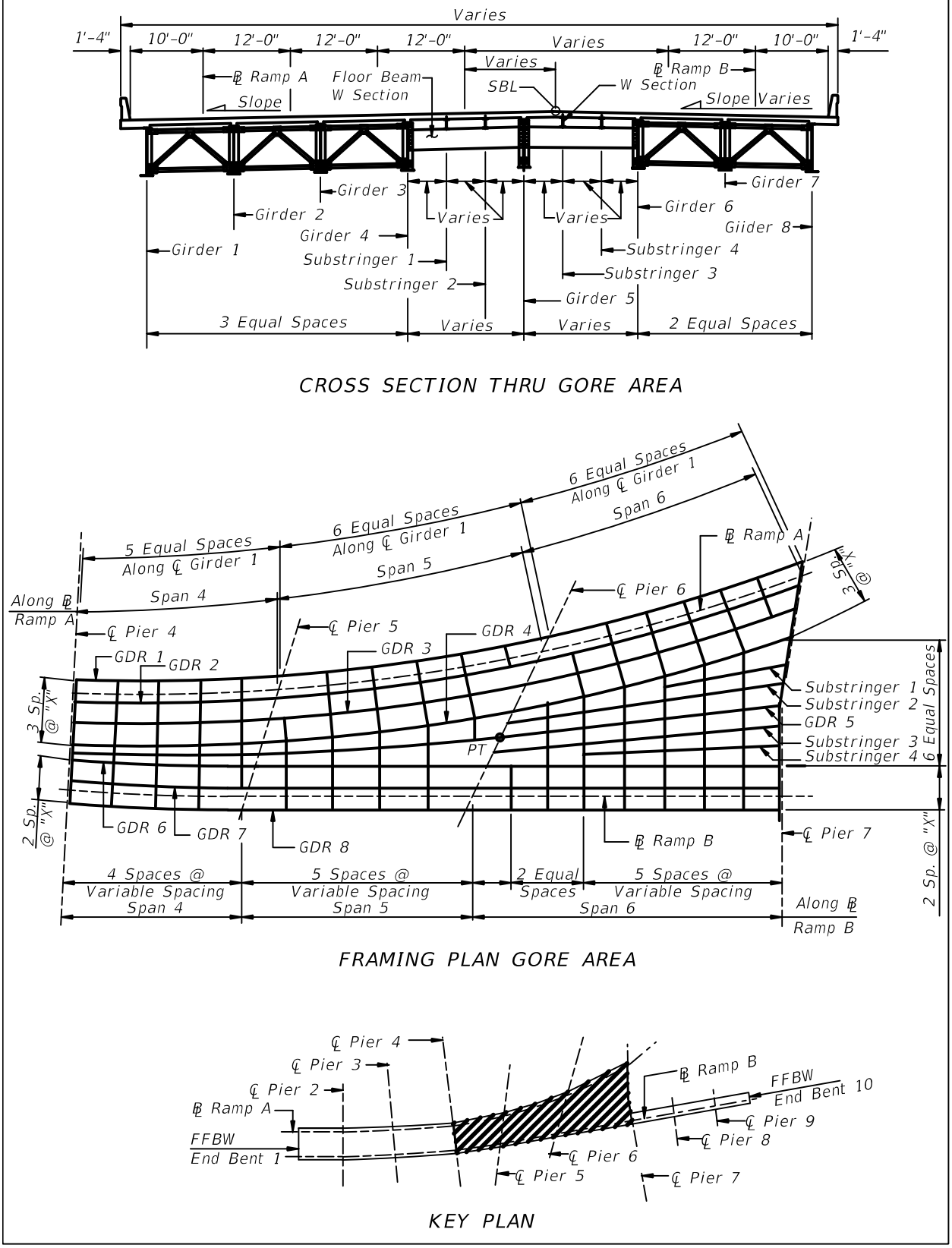

Figure 16.3-4 Framing Plan at Tapered Ramp

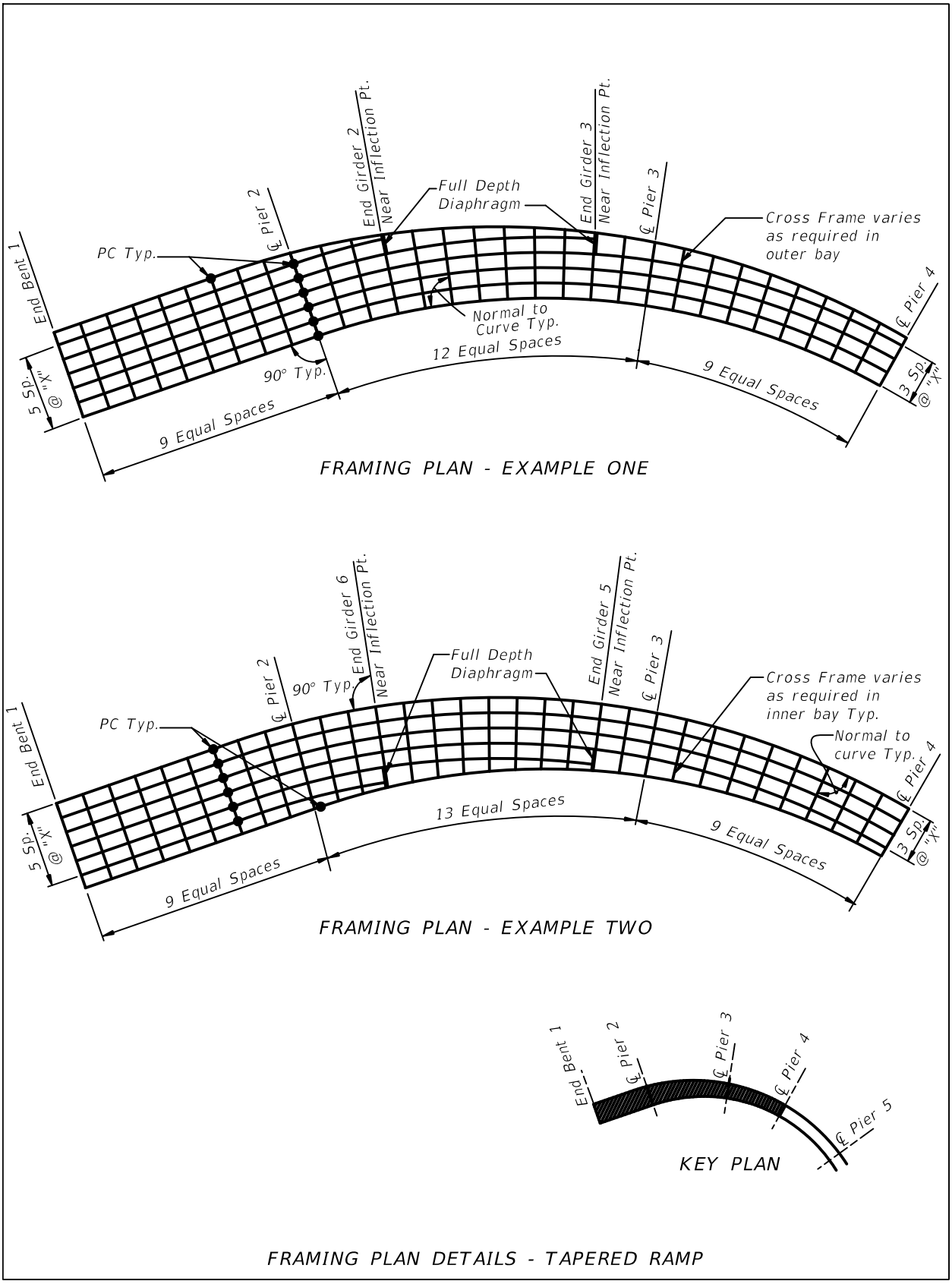

16.4 FRAMING PLAN DRAWINGS AND DETAILS - STEEL BOX GIRDERS

Provide a framing plan for steel box superstructures showing the following information (see Figure 16.4-1):

A. All applicable information shown in ***SDM*** 16.3.

B. Access opening location and spacing.

C. Drain hole location and spacing.

D. Show limits of longitudinal stiffeners.

E. In plan view, show centerline of top of web. (Do not show width of top flange.)

F. Permanent/temporary external diaphragm/crossframe locations.

Figure 16.4-1 Curved Box Girder Framing Plan

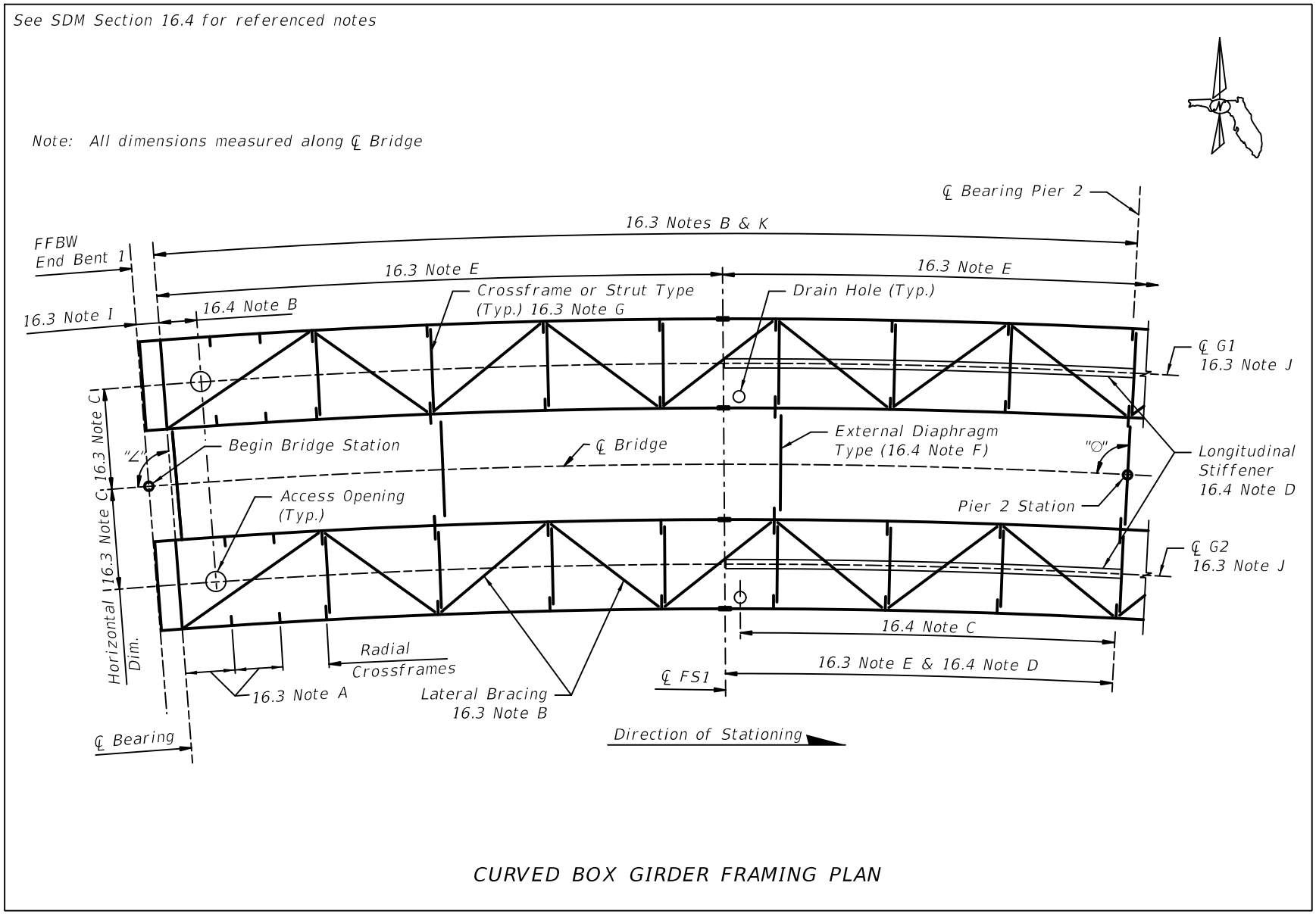

16.5 GIRDER ELEVATION

Girder Elevation sheets are required on all bridges with a steel superstructure. The girder elevation may be shown on the Framing Plan, or this may be a separate sheet. Much of the information presented here can be shown in tabular format, as required. Detail girder elevation upstation left to right. At a minimum, include the following on the Girder Elevation sheet:

A. Elevation view of girder. Vertical scale may be exaggerated for clarity. Provide suitable matchlines for girders that require more than one sheet.

B. Shear connector spacing along centerline of girder (centerline of box for box girders).

C. Flange plate sizes.

D. Web plate size.

E. Weld sizes and types. Reference welding symbols at www.aws.org.

F. Field splices. Number splices sequentially left to right. Designate optional splices as required.

G. Plates to be Charpy V-Notch (CVN) tested (use legend).

   1. Indicate where CVN testing is required along top and bottom flange dimension lines or by indicating web locations with note/arrow.
   2. Girder Field Splice Plates shall indicate CVN testing with note/arrow.
   3. Indicate Fracture Critical Members by notation (FCM).

H. Dimensions for length along centerline girder as follows:

   1. From girder end to centerline of bearing at the end of the unit.
   2. Between centerline piers and/or centerline of bearing at the end of the unit.
   3. Between centerline(s) of bearing and field splice(s).
   4. Girder section changes. Show this dimension for top flange, bottom flange or web section changes.
   5. Limits of flange tension and stress reversal zones.

I. Bearing stiffener and jacking stiffener spacing from girder end and/or centerline bearing at intermediate supports. Space bearing and jacking stiffeners no less than 8" apart.

J. Show and dimension any penetrations in the web for drainage pipes, post tensioning, sign/signal attachments, etc.

K. Material designation requirements for hybrid designs.

Figure 16.5-1 Typical Girder Elevation

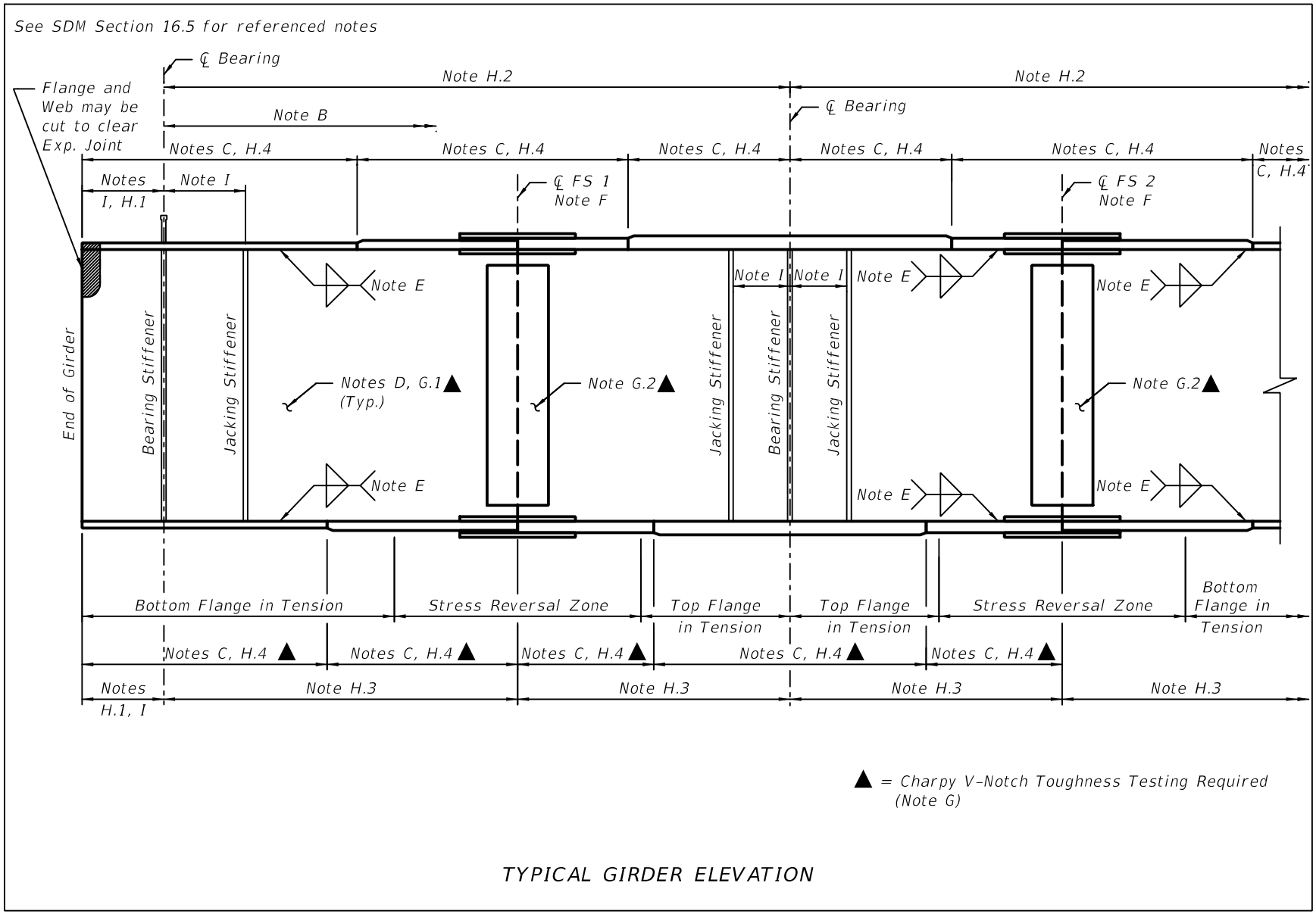

16.6 I-GIRDER STIFFENER DETAILS

Include details on the Stiffener Detail sheets for fabrication and placement of bearing/ jacking stiffeners, intermediate stiffeners and crossframe connection plates. At a minimum, include the following on the Stiffener Details sheet (see Figure 16.6-1, Figure 16.6-2,Figure 16.6-3, Figure 16.6-4 and Figure 16.6-5):

A. Section of girder or diaphragm showing stiffener plate dimensions. Show enough sections to adequately address all stiffener scenarios. Do not double label a single section.

B. Plate sizes and dimensions for all stiffeners and connection plates. Size stiffeners taking into account bolt patterns and associated tolerances. Detail stiffeners in whole inch widths.

C. Weld type and dimension. Use appropriate welding symbols.

D. End conditions for stiffeners. Use "Finish to Bear" at the bottom of jacking and bearing stiffeners only.

E. Cut short or corner clip dimensions. Generally, a 1½" by 3" clip is preferred. Maintain the same clip dimensions throughout. For transverse intermediate stiffeners on straight girders not used as cross-frame connection plates, show both tight-fit and cut-back options in the plans at the tension flanges when top flange is in compression. See Figure 16.6-5.

F. Tab plate and cut back details. Tab Plates should be used only when the cost can be shown to be justified.

G. Weld termination detail.

H. Show jacking and bearing stiffeners normal to bottom flange for vertical grades up to 4%. Detail all connection plates and intermediate stiffeners normal to top flange.

I. Intermediate stiffeners on one side only and inside only for exterior girders.

Figure 16.6-1 Weld Termination Detail

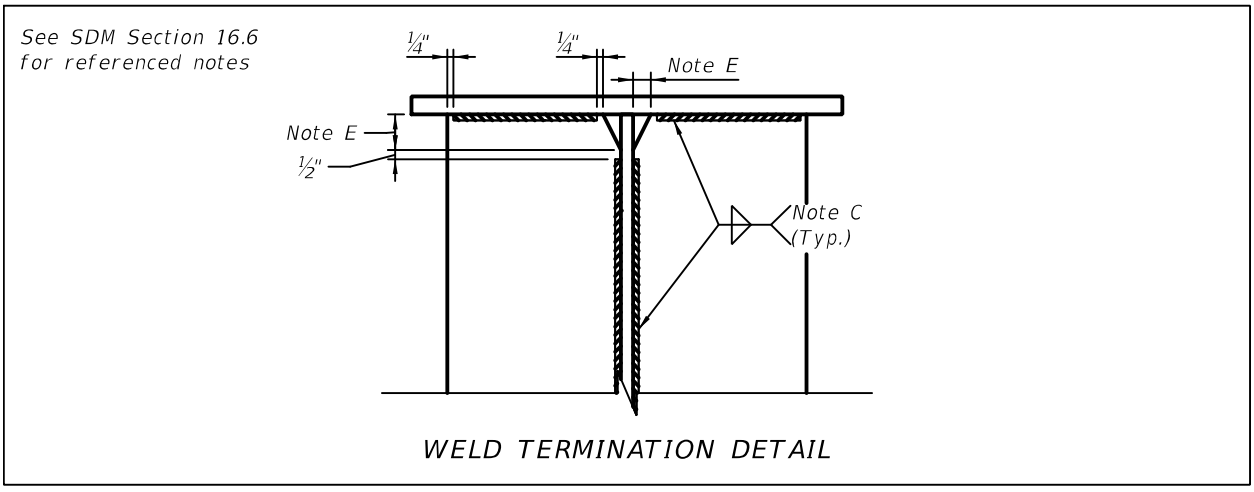

Figure 16.6-2 Tab Plate Detail

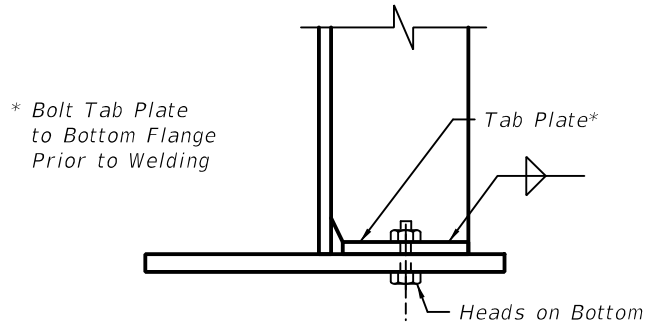

TAB PLATE DETAIL

Figure 16.6-3 Standard Clip Options

See SDM Section 16.6
for referenced notes

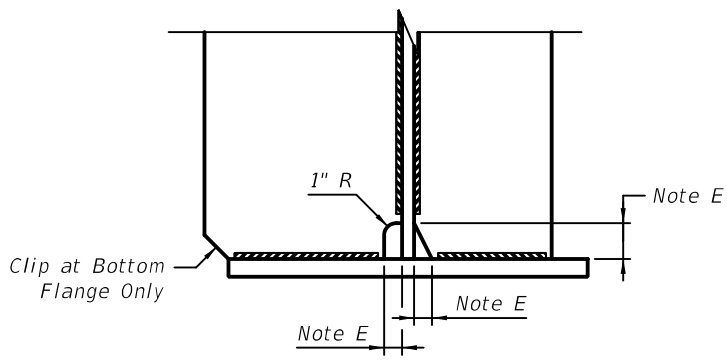

STANDARD CLIP OPTIONS

Figure 16.6-4 Details of Bearing/Jacking and Crossframe Connection Stiffeners

See SDM Section 16.6
for referenced notes

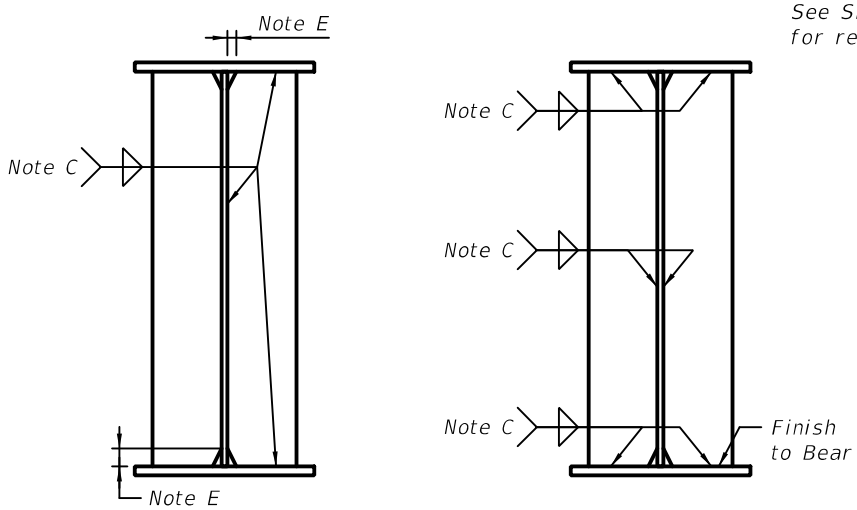

CROSSFRAME CONNECTION STIFFENER*

BEARING/JACKING STIFFENER

* Plate can be welded or bolted to tension flange. See Figure 16.6-2 & SDG 5.8.

Figure 16.6-5 Details of Intermediate Stiffeners w/o Crossframe Connections

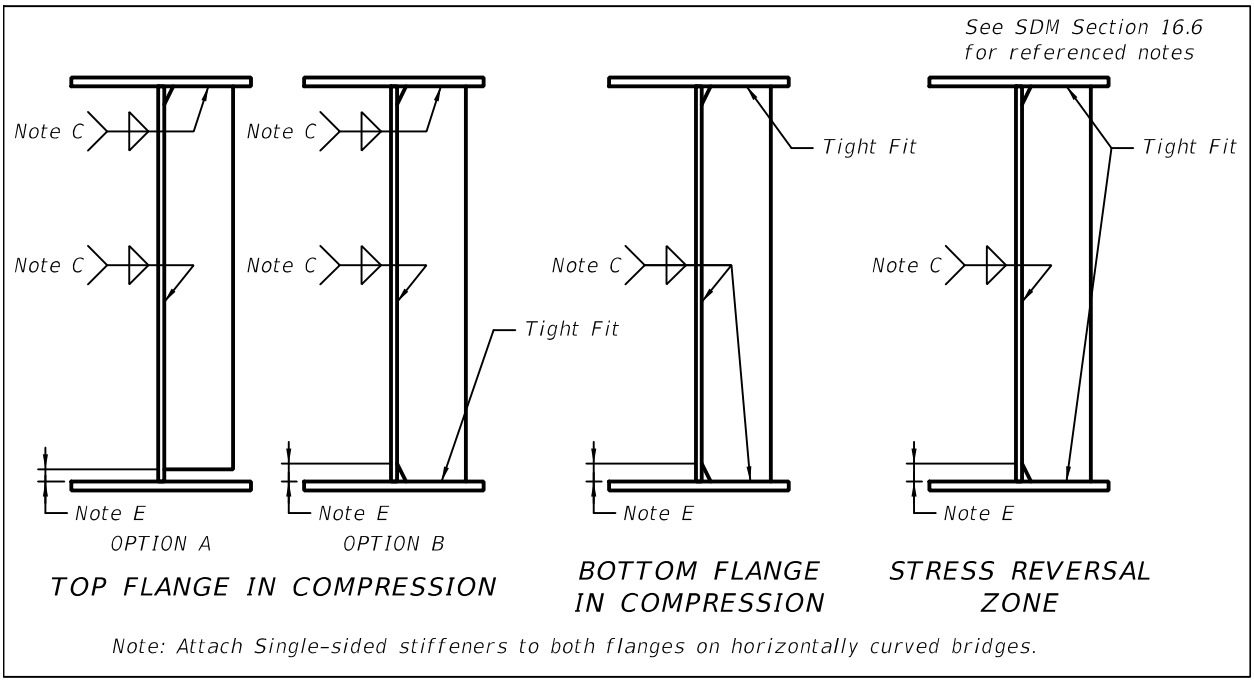

16.7 CROSSFRAME DETAILS - I-GIRDERS

Include details on Crossframe Detail sheets for fabrication and placement of intermediate and end crossframes. At a minimum, include the following on the Crossframe Details sheet (see Figure 16.7-1 and Figure 16.7-2):

A. Partial section of superstructure showing typical bay. Show at least one section for each type of end crossframe and intermediate crossframes.

B. Bolt layout and spacing. Maintain minimum edge distances taking tolerances into account. Detail bolt patterns normal to girders.

C. Plate thickness for gusset plates. Keep plates rectangular.

D. Member sizes (angles, C-channels, WT-sections, etc.). Use standard shapes for all members. Show angles with horizontal leg on the upper side of member.

E. Shear connector spacing for end crossframes. Be aware of spaces required to bolt-up end crossframes.

F. Weld detail with dimensions. Weld termination details at all gusset and connection plates. Generally, ¼" fillet welds are preferable. Terminate welds ½" from edge.

G. Bolt hole sizes when oversized or slotted holes are required. Field-drilled connections are preferred at closure pour bays.

H. Partial plan view of crossframe showing bent plates at skewed supports.

I. Details for temporary crossframes.

J. Deck drainage piping conflict details.

K. Dimension between top of web and top of top chord of crossframe (channel for end crossframes).

Figure 16.7-1 Typical I-Girder Crossframe Details

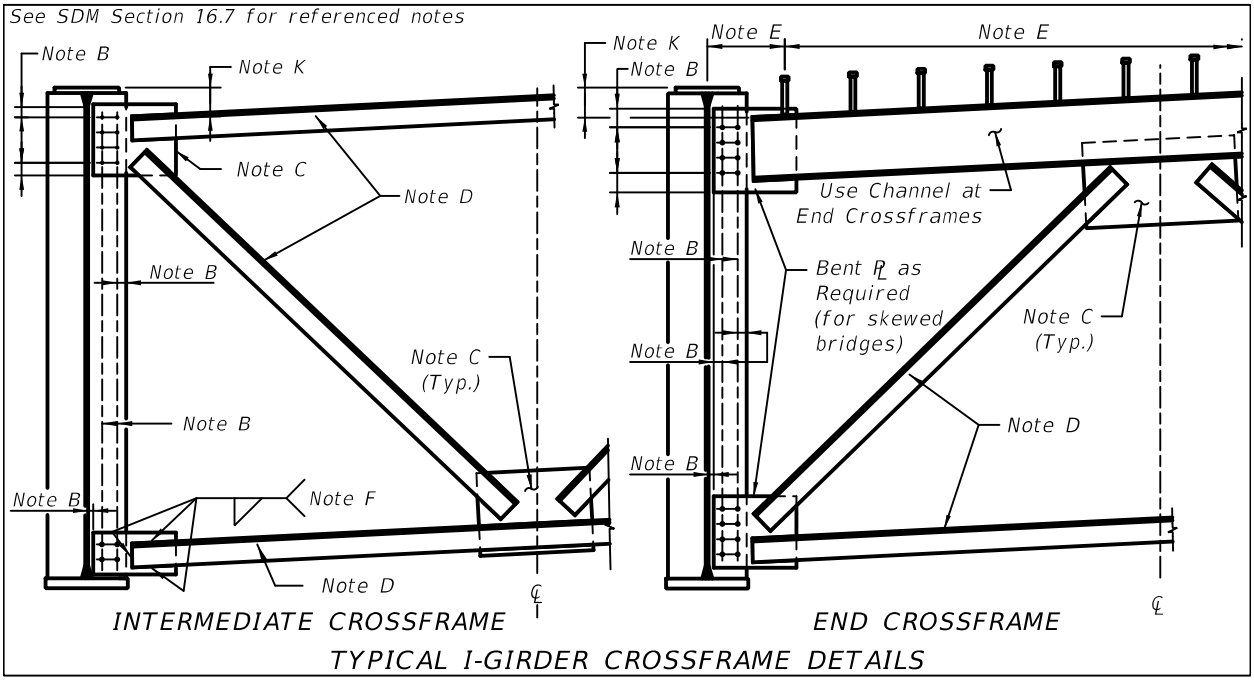

Figure 16.7-2 End Crossframe / Diaphragm Connection Details

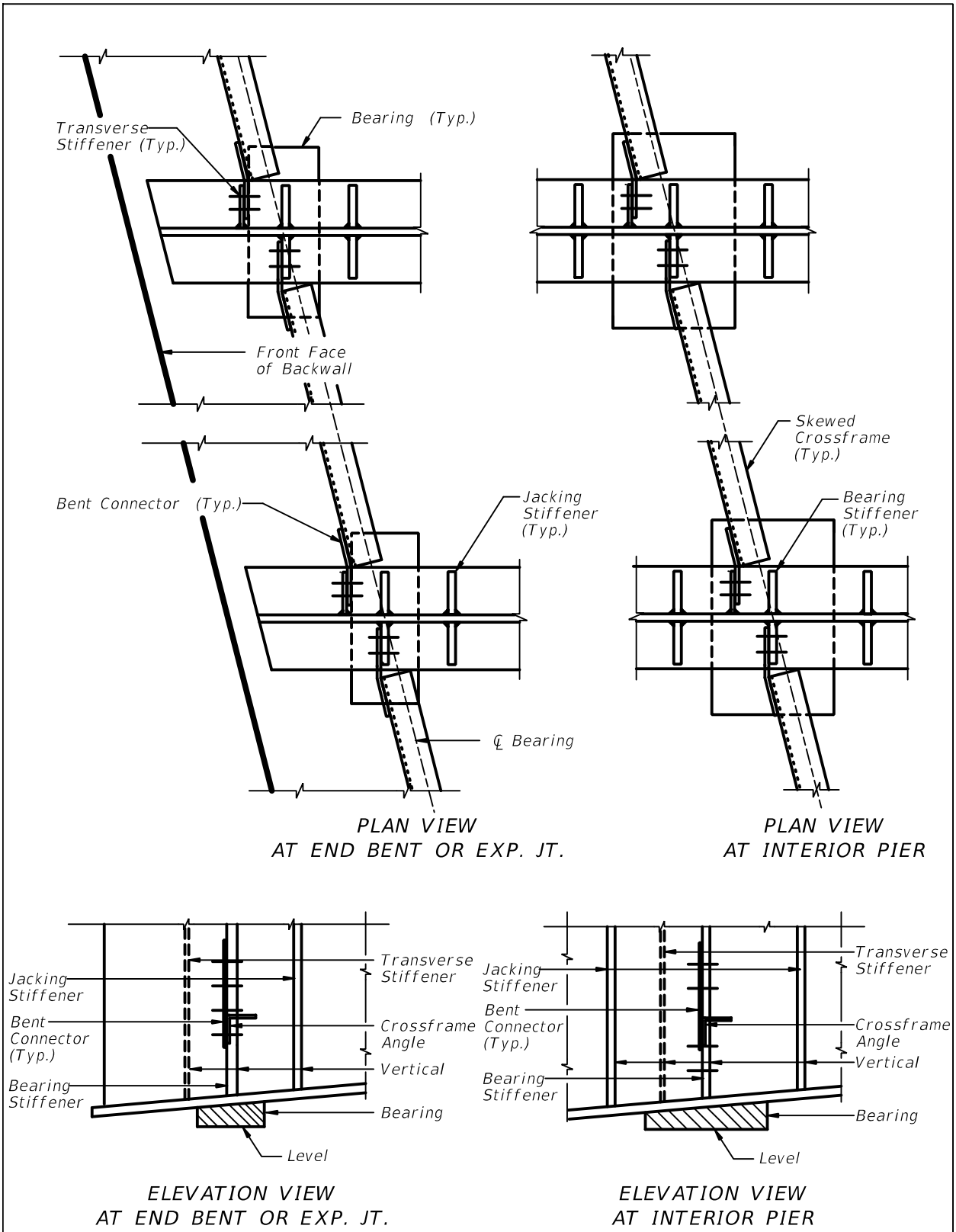

END CROSSFRAME / DIAPHRAGM CONNECTION DETAILS

16.8 CROSSFRAME & DIAPHRAGM DETAILS - BOX GIRDERS (Rev. 01/17)

Include details on Crossframe and Diaphragm Detail sheets for fabrication and placement of internal crossframes and diaphragms in box girders. This includes details for internal crossframes, internal lateral bracing, end diaphragms, external diaphragms and external crossframes. At a minimum, include the following on these detail sheets (see Figure 16.8-1, Figure 16.8-2, Figure 16.8-3, Figure 16.8-4 and Figure 16.8-5):

A. Partial section of superstructure showing typical bay. Show at least one section each for all crossframes and diaphragms, internal and external.

B. Bolt layout and spacing dimensions. Maintain minimum edge distances taking tolerances into account. Detail bolt patterns normal to girder web.

C. Plate thickness for gusset plates.

D. Member sizes (angles, C-channels, WT-sections, etc.). Use standard shapes for all members. Show angles with horizontal leg on the upper side of member.

E. Shear connector spacing for end diaphragms. Be aware of spaces required to bolt-up external end crossframes.

F. Weld detail with dimensions. Weld termination details at all gusset and connection plates. Generally, ¼" fillet welds are preferable.

G. Top flange lateral bracing for box girders. The use of lateral gusset plates is permitted to aide bracing fit-up. Use fill plates where required to avoid conflict with formwork or diaphragm top flange. Include a plan view of lateral bracing connection details.

H. Tab plate details. Include weld sizes and termination details.

I. Details for temporary diaphragms.

J. Diaphragm details.

   1. Plate sizes.
   2. Location and sizes of stiffeners. Detail stiffeners normal to box bottom flange and vertical.
   3. Locations of access holes and utility holes.
   4. Cut out dimensions and connection details for longitudinal stiffeners.
   5. All applicable details listed above.

Figure 16.8-1 Steel Box Girder Cross Section Basic Geometry

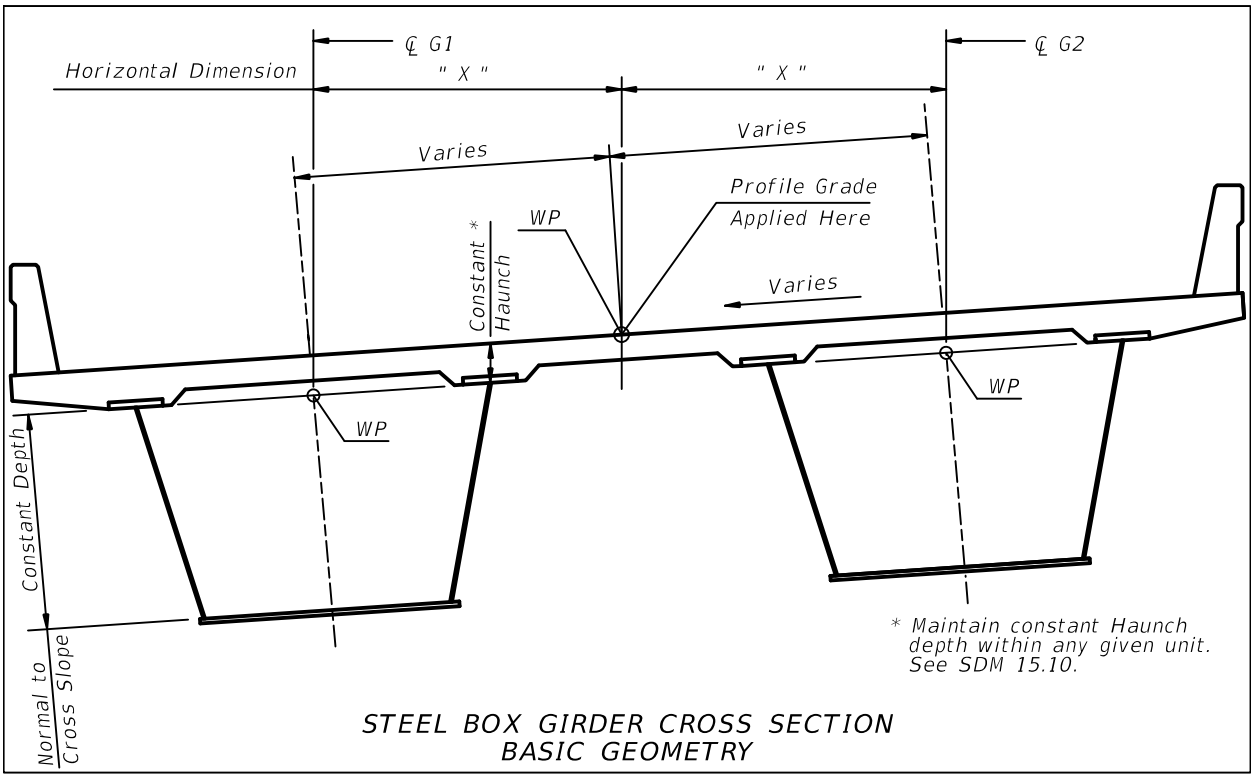

Figure 16.8-2 Steel Box Girder Pier Diaphragms

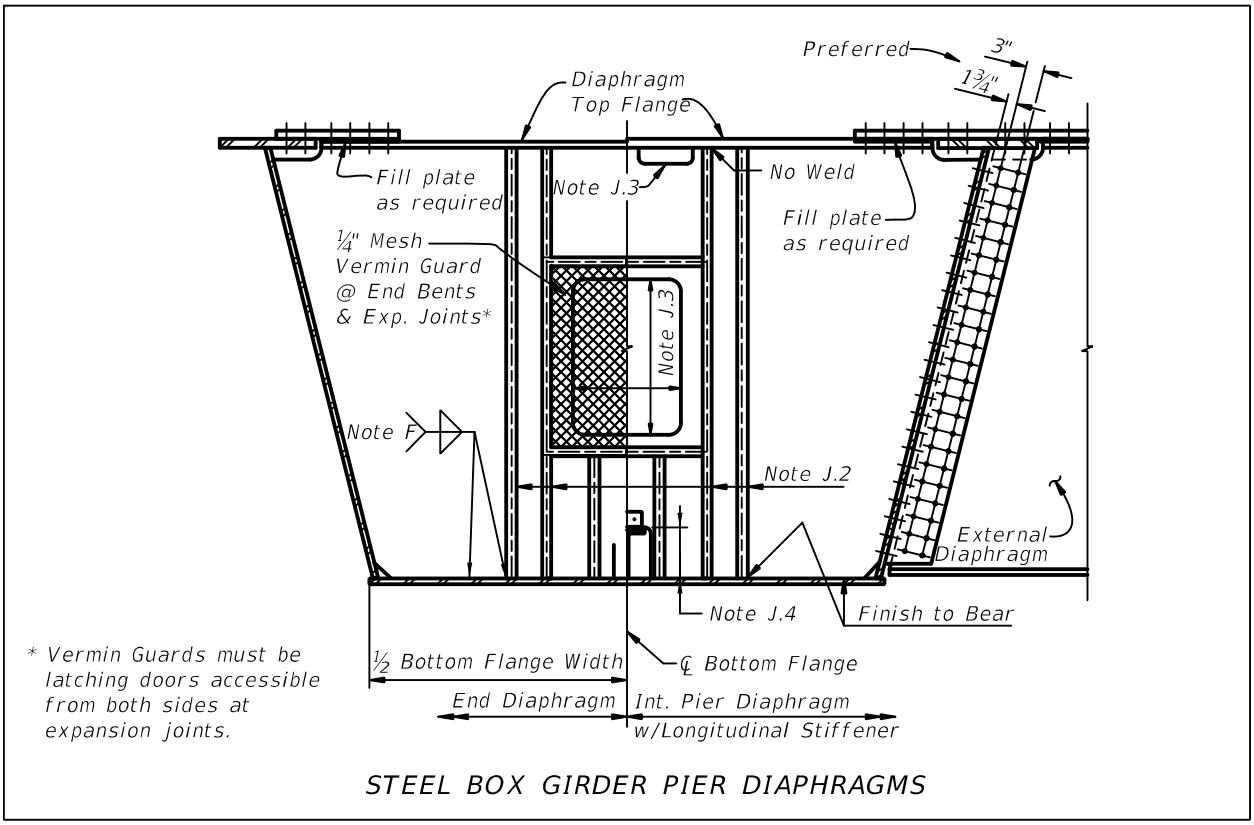

Figure 16.8-3 Steel Box Girder Internal Crossframe

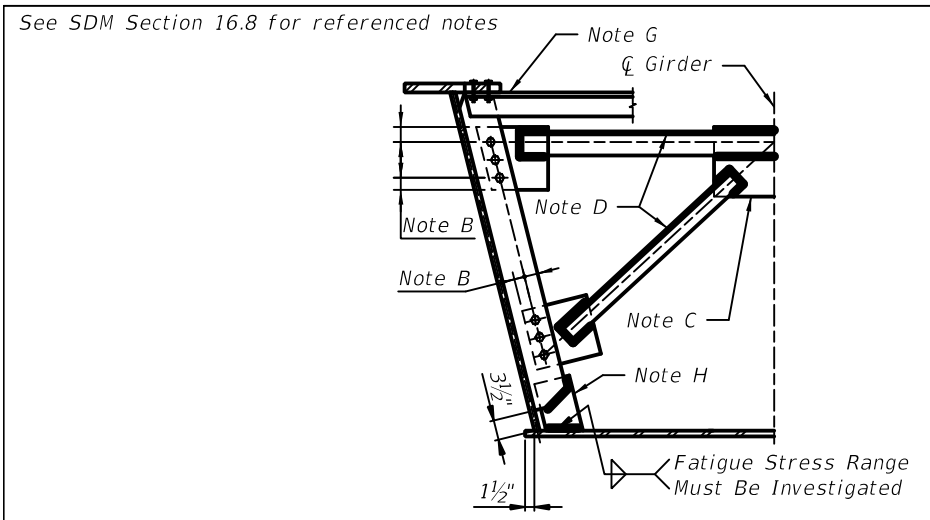

STEEL BOX GIRDER INTERNAL CROSSFRAME

Figure 16.8-4 Steel Box Girder Crossframe with Longitudinal Stiffener

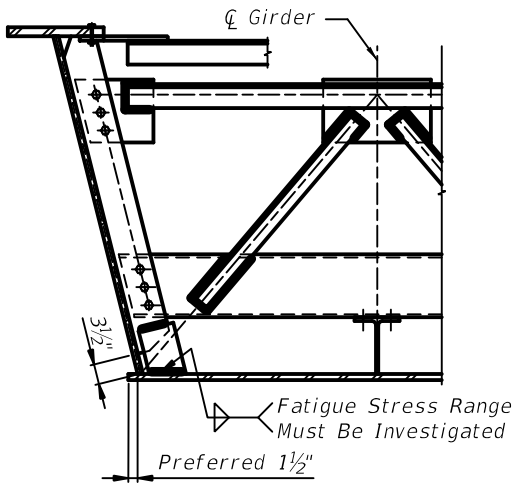

STEEL BOX GIRDER CROSSFRAME WITH LONGITUDINAL STIFFENER

Figure 16.8-5 Steel Box Girder Intermediate Diaphragm Connection

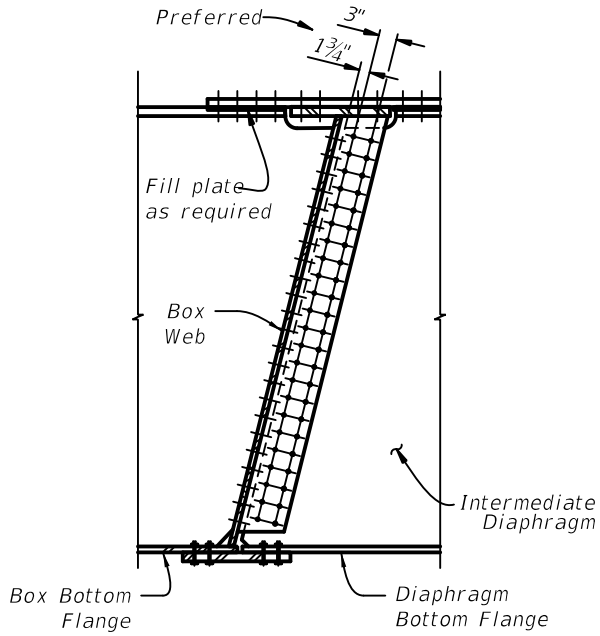

INTERMEDIATE PERMANENT EXTERNAL DIAPHRAGM CONNECTION TO BOTTOM FLANGE

16.9 GIRDER DEFLECTION AND CAMBER DIAGRAMS

Girder Deflection and Camber sheets are required for all steel superstructures. Provide sufficient geometric reference for girder fabrication and deck placement on these sheets. For examples illustrating the content and format of completed Camber Diagram sheets, see the ***Structures Detailing Manual Examples***. Typically, camber and deflection ordinates are shown in tabular format. Show total dead load deflection along the centerline of the box for box girders, and net camber along the centerline of the girder for I-girders. At a minimum, include the following on the Girder Deflection and Camber sheet (see Figure 16.9-1 and Figure 16.9-2):

A. Line diagram showing a graphical representation of the following:
   1. Total camber including vertical curve camber*.
   2. Span number and length.
   3. Horizontal increment ordinate locations.
   4. Label centerline bearing.

B. Tabulated camber ordinates for the following:
   1. Steel deadload deflection.
   2. Non-Composite deadload deflection (deck, SIP forms, build-up, haunch).
   3. Composite dead load deflection (railings, utilities, noise walls, wearing surface, traffic separators).
   4. Total deadload deflection.
   5. Vertical curve*. If not applicable, omit this row from the table.
   6. Total required camber including vertical curve camber*.

   * vertical curve ordinate not included for box girders.

C. Miscellaneous camber notes:

1. Indicate downward deflection as positive.
2. Indicate upward camber as positive.
3. Base deck deadload deflection on deck casting sequence. Include note in the plans that changes in casting sequence will require re-calculation of deck deadload deflections.

Figure 16.9-1 I-Girder Camber Diagram

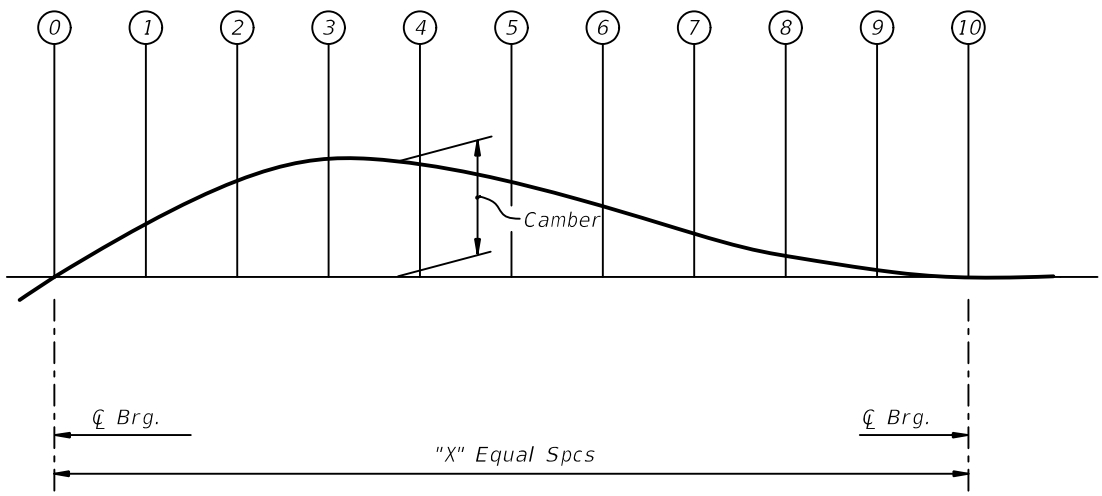

LINE		0	1	2	3	4	5	6	7	8	9	10
G1	STEEL DL	0										0
	CONCRETE DL	0										0
	COMPOSITE DL	0										0
	TOTAL DL	0										0
VERTICAL CURVE	VC	0										0
	REQUIRED CAMBER	0										0

Cambers can be given in fractions, decimal of a foot or decimal inches.
Upward camber is positive. Downward deflection is positive.

I-GIRDER CAMBER DIAGRAM

Figure 16.9-2 Box Girder DL Deflection Diagram

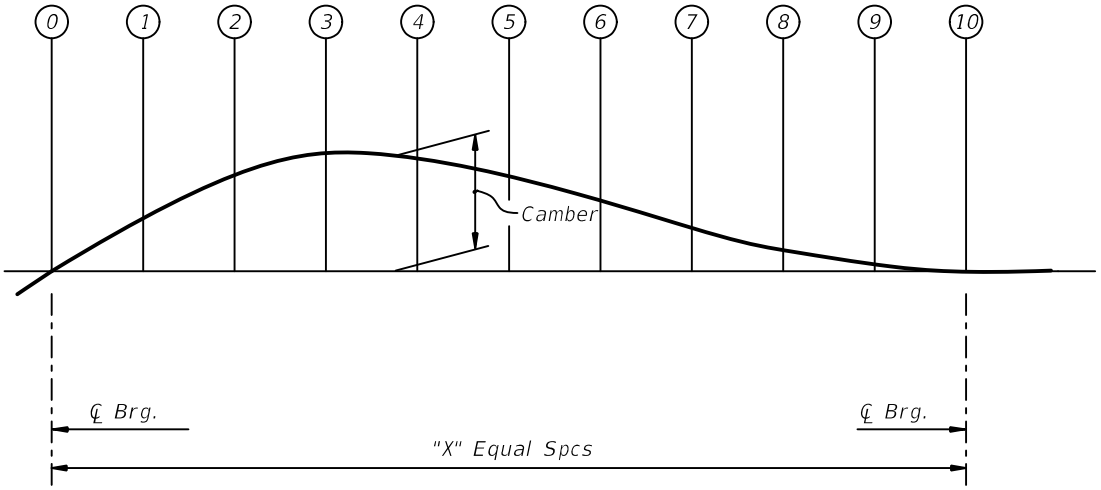

LINE		0	1	2	3	4	5	6	7	8	9	10
G1	STEEL DL	0										0
	CONCRETE DL	0										0
	COMPOSITE DL	0										0
	TOTAL DL	0										0

Cambers can be given in fractions, decimal of a foot or decimal inches.
Upward camber is positive. Downward deflection is positive.

BOX GIRDER DL DEFLECTION DIAGRAM

16.10 WELDS

A. Avoid using details that cause stress concentrations in the weld and a decrease in the basic allowable stress range.

B. It is the designer's responsibility to design the connections; however the detailer should be familiar with [Table 6.6.1.2.3-1] and [Figure 6.6.1.2.3-1] in ***LRFD***. This table indicates that welds cause reductions in allowable fatigue strength and the reductions are governed by the magnitude of discontinuities in the welds.

C. Where avoidable, do not use Category E weld types as defined in ***LRFD*** [Table 6.6.1.2.3-1]. Category E welds are allowed for use in cross frame connections.

D. Detail all welds as follows:

   1. Intersecting welds: Do not use this type detail.

   2. Longitudinal weld terminations: Terminate plates on cover-plated beams at the ends of beams. Welds shall be continuous. When attachments require longitudinal welds on beams or girders, refer to ***LRFD***.

E. Any detail, except as noted above, can be used provided it is properly accounted for in the design and details. The simplest detail consistent with the stress requirements will generally be the most desirable from the standpoint of design, fabrication and economics.

16.11 MISCELLANEOUS DETAILS

Steel girder details shall provide sufficient information for fabrication and erection of the girders. These miscellaneous details can be shown on a separate sheet or incorporated in any of the previous sheets, as space permits. The following details are typical for most steel girder applications:

A. Transverse shear connector spacing detail (weld symbol not required in this detail as it is covered by ***Specifications*** Section 502). See Figure 16.11-3.

B. Anchor bolt or rod details.

C. Field splice detail. Include the following (see Figure 16.11-2):

   1. Plan view of both top and bottom flange. Include thickness and/or width transition detail. It is not necessary to transition top flange widths at field splices where the section changes since the top flange will not be visible.

   2. Section view.

   3. Elevation view.

   4. Plate sizes and thicknesses, including filler plates.

   5. Bolt layout and spacing. Provide dimension from top of web to uppermost row of bolts in the web splice. Maintain minimum edge distance requirements.

D. Stay-in-place form details. Detail forms inside box girders to avoid conflicts with the top flange lateral bracing system. See ***SDM*** Chapter 15 for typical SIP form details.

E. Box girder details including the following:

1. Access opening details.
2. Vermin guards.
3. Diaphragm access opening details.
4. Drain holes with screen covers. Drain holes should be a minimum of 5' from centerline pier or front face of backwall. See Figure 16.11-4.
5. Electrical access holes.
6. Longitudinal stiffener details. Detail longitudinal stiffener termination as shown. See Figure 16.11-1.

F. Details for shop splices. Show minimum distances to field splice, section change locations, nearest stiffeners, etc. Detail welds as full penetration welds. Specify welds are to be ground flush for exterior faces of fascia girder webs and all bottoms of top and bottom flanges. Welds on the tops of top and bottom flanges do not need to be ground flush. See Figure 16.11-5.

G. Details for deck closure pours when phased construction is required or when widening an existing bridge. Show a section through the closure pour bay detailing the Phase I bolt holes in the connector plates as slotted and Phase II bolt holes in the connector plates to be field drilled. Closure pours should be kept as close as possible to the two foot minimum. Center closure pours between adjacent girders. Avoid phasing where closure pours are over girders. See Figure 16.11-6.

H. Field welding of sole plates to steel I-girders shall be in accordance with AASHTO/AWS D1.5. Provide details showing size and limits of welds along sides of flanges. See Figure 16.11-7.

Figure 16.11-1 Box Girder Bottom Flange Stiffener Transition and Termination Details

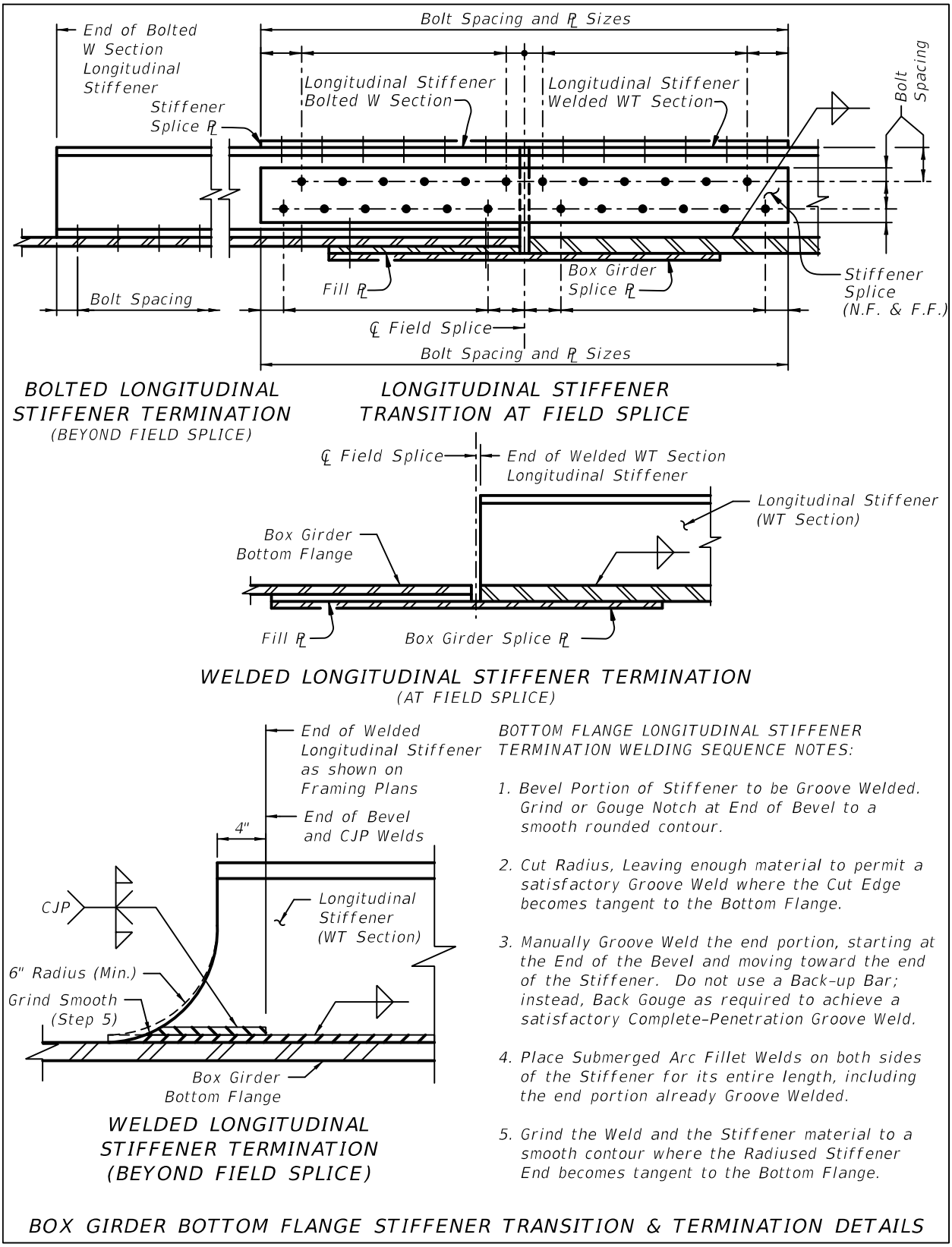

Figure 16.11-2 Web Splice Detail

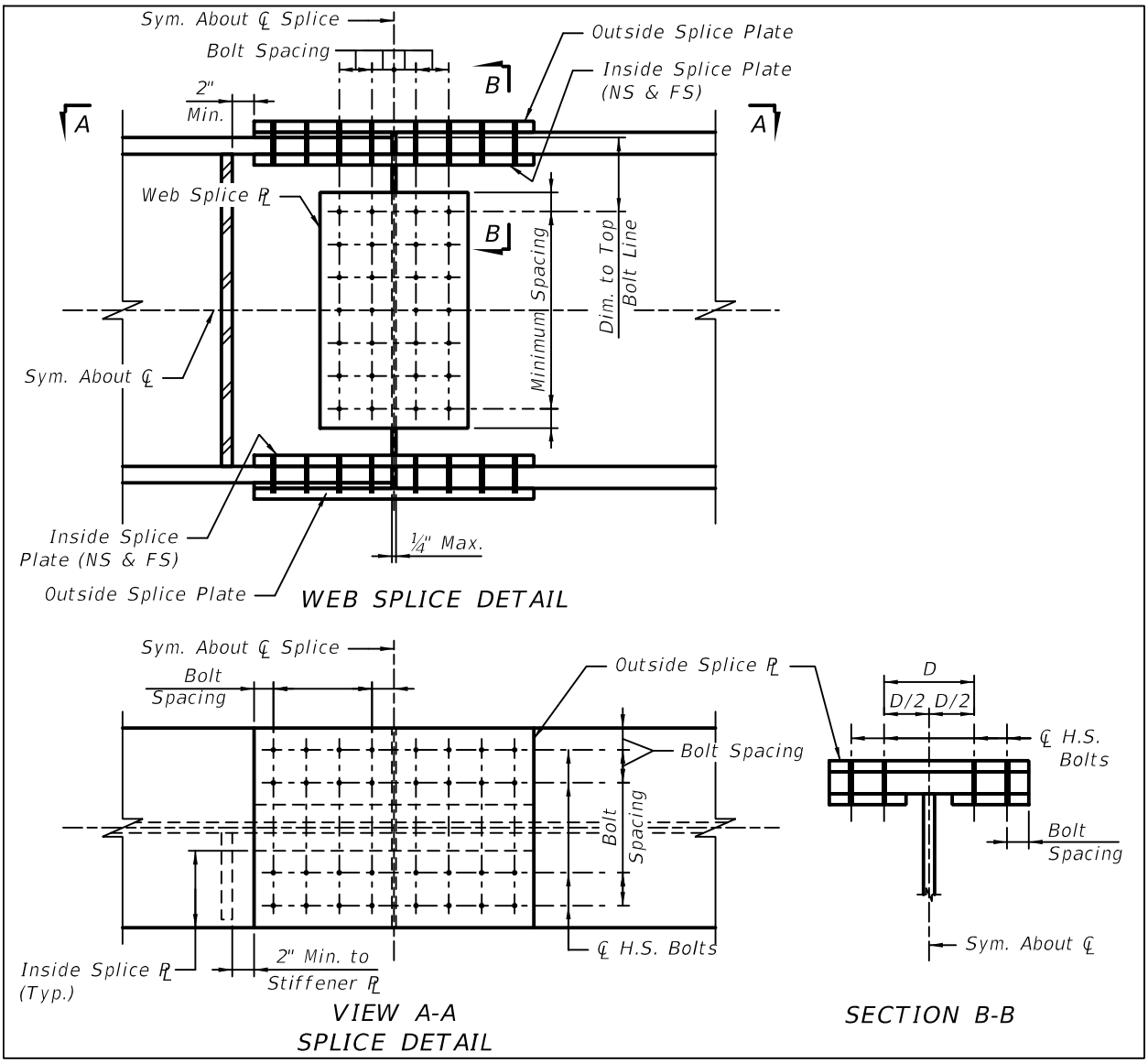

Figure 16.11-3 Top Flange Shear Connector Detail

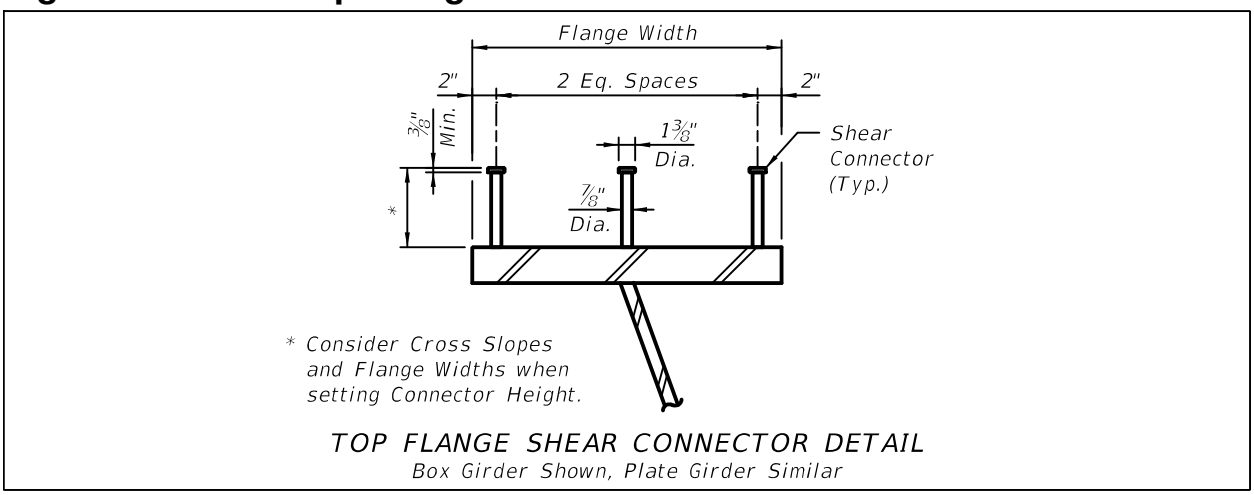

Figure 16.11-4 Box Girder Section with Drain Hole Detail

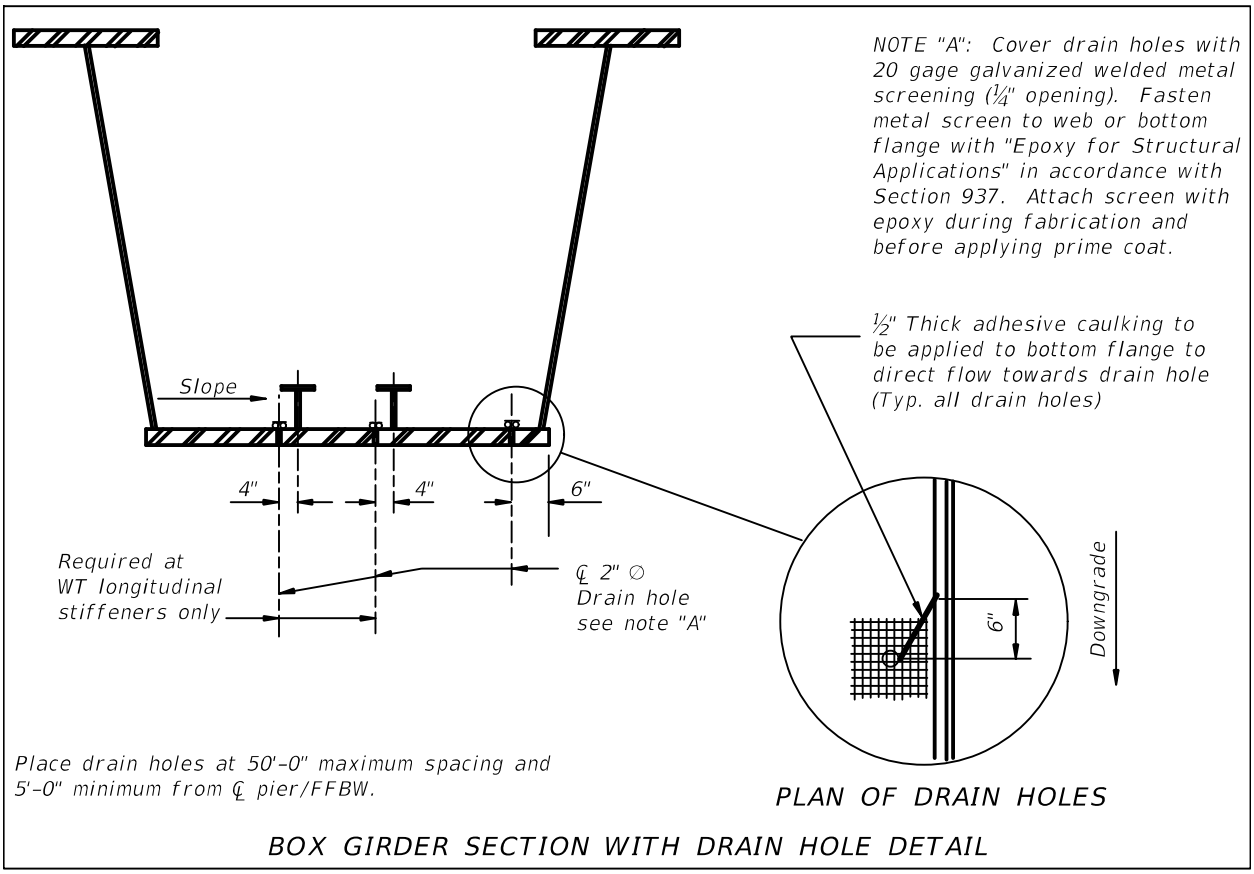

Figure 16.11-5 Shop Splice Details

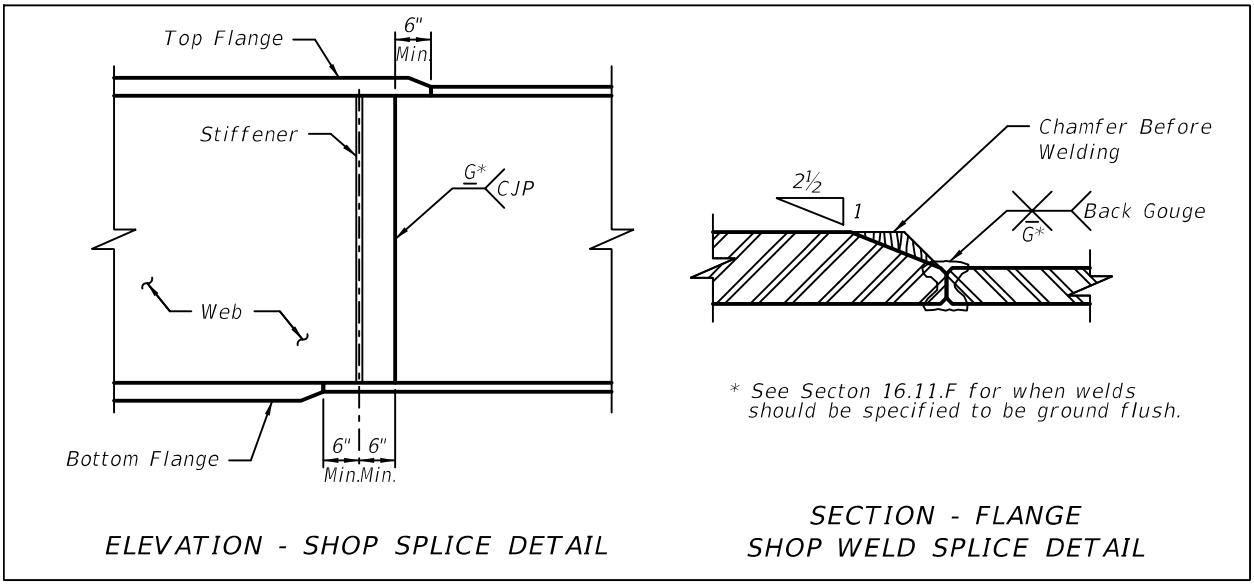

Figure 16.11-6 Phased Construction Steel Detail at Closure Pour

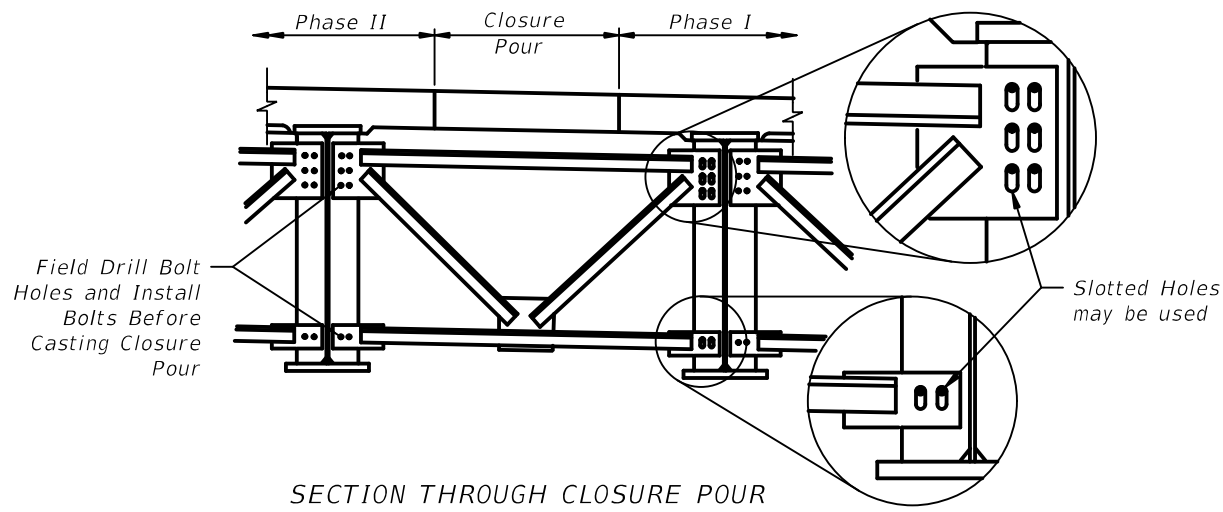

Figure 16.11-7 Sole Plate Details

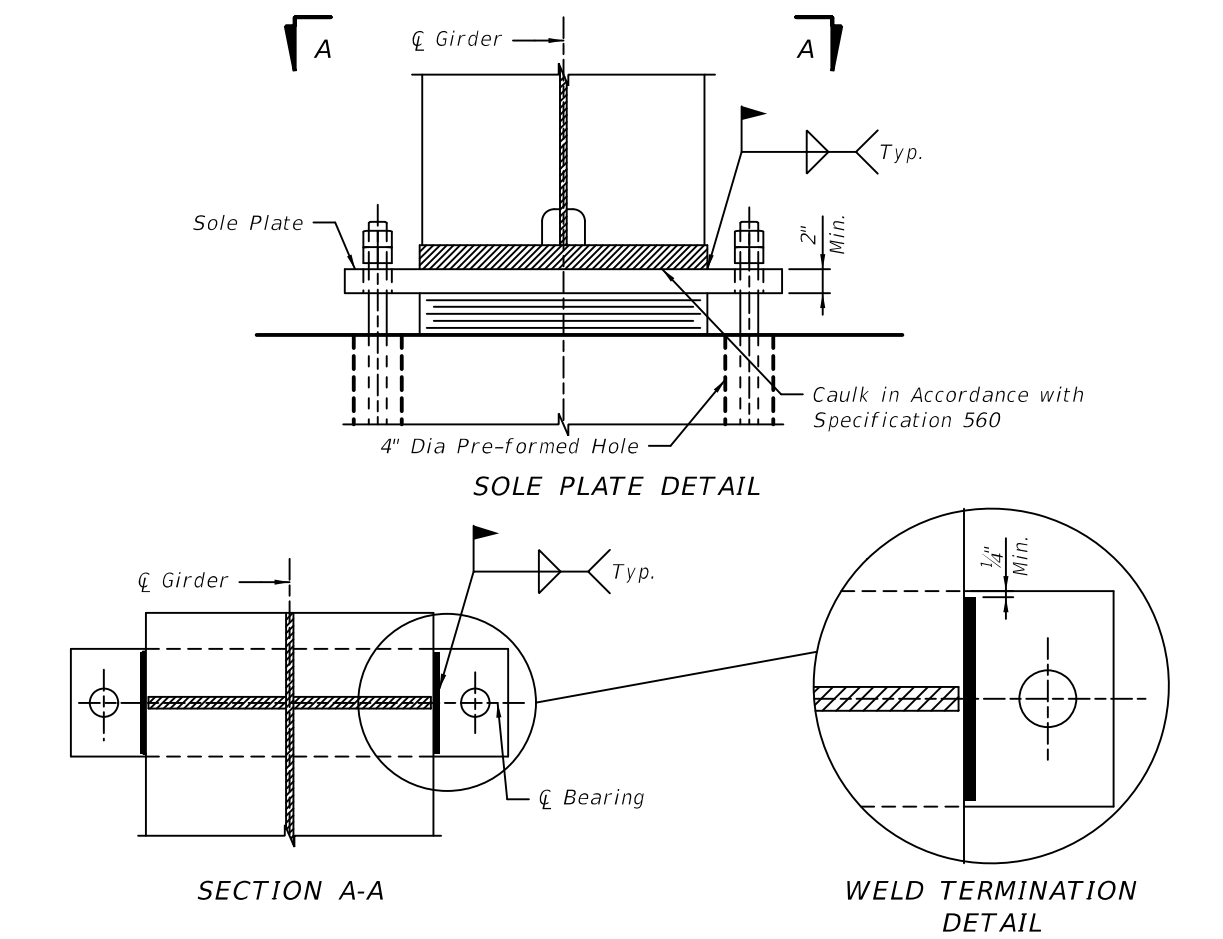

16.12 SPECIAL DETAILS FOR UNCOATED WEATHERING STEEL BRIDGES

The following details are required for uncoated weathering steel bridges to prevent corrosion of the girders and staining of the substructure elements due to runoff. See Figure 16.12-1, Figure 16.12-2 and Figure 16.12-3.

A. Provide Drip Tabs on the bottom flange of all box-girders and I-Girders up grade from each pier/bent to divert runoff water.

B. Provide Drip Strips along the outside edge of exterior I-girders to channel runoff water past pier/bents or to pier/bent troughs adjacent to girder ends.

C. Slope the caps at all end bents and at piers located at intermediate deck joints. Provide troughs or other means to drain water from the cap to a drain pipe embedded in the end bent or pier. At end bents, extend the pipe drain through the embankment and out of the adjacent retaining wall or slope pavement.

D. Provide a ½" thick sacrificial end plate at the ends of all I-girders to protect girders from leaky joints.

E. Use sealed expansion joints. Avoid any type of open joint that allows runoff to reach the steel.

F. Provide details that take advantage of natural drainage. Eliminate details that retain water, dirt, and other debris.

G. Provide a stainless steel drip pan at the top of each column supporting steel straddle pier caps. Show the drip pan connected to a drain pipe embedded in the column. Size the drip pan sufficiently so that it will capture water dripping from the straddle pier cap and prevent it from staining the sides of the column. Coordinate the design of the drip pan with the bearing.

Figure 16.12-1 Weathering Steel I-Girder Details (1 of 2)

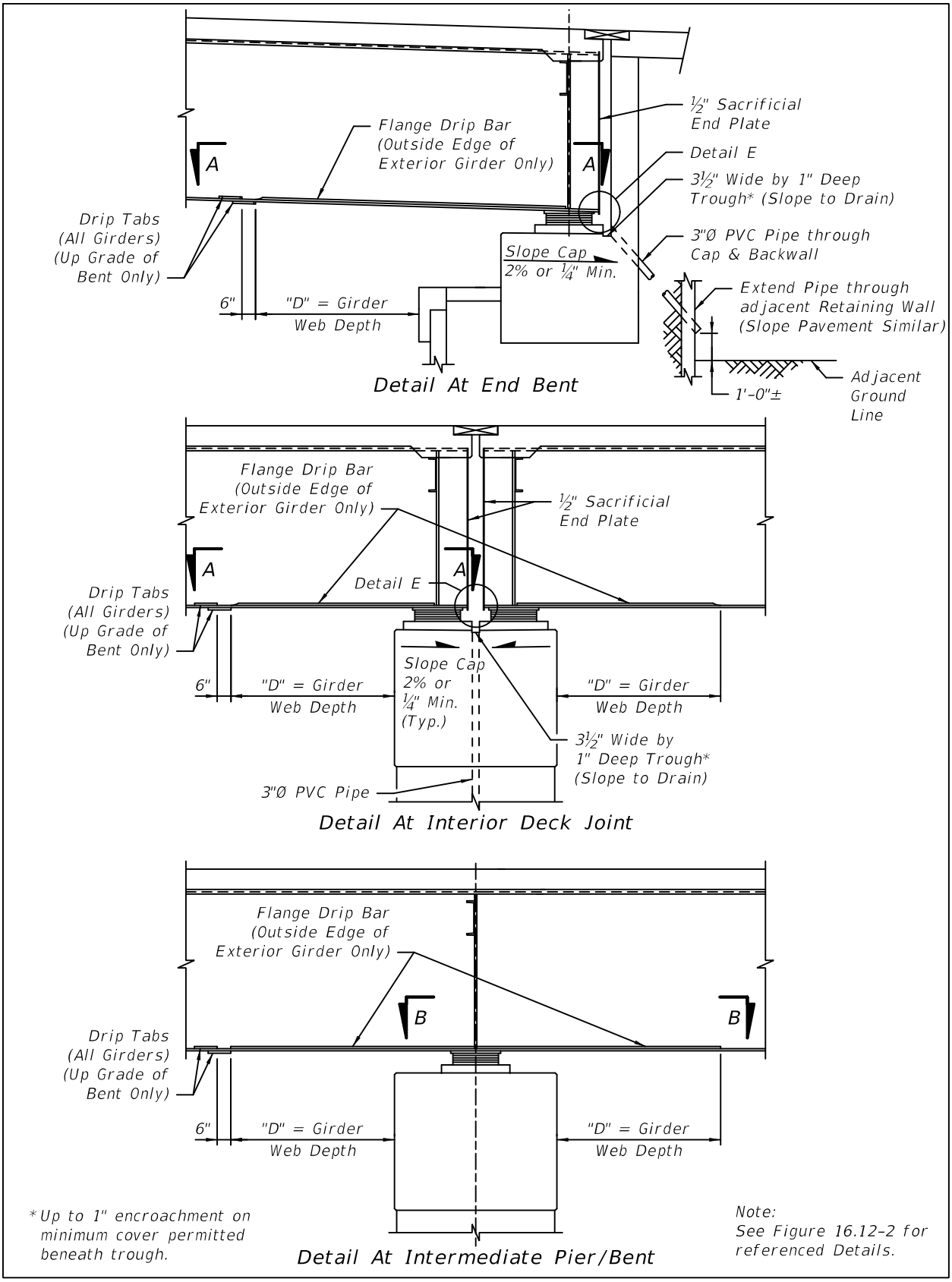

Figure 16.12-2 Weathering Steel I-Girder Details (2 of 2)

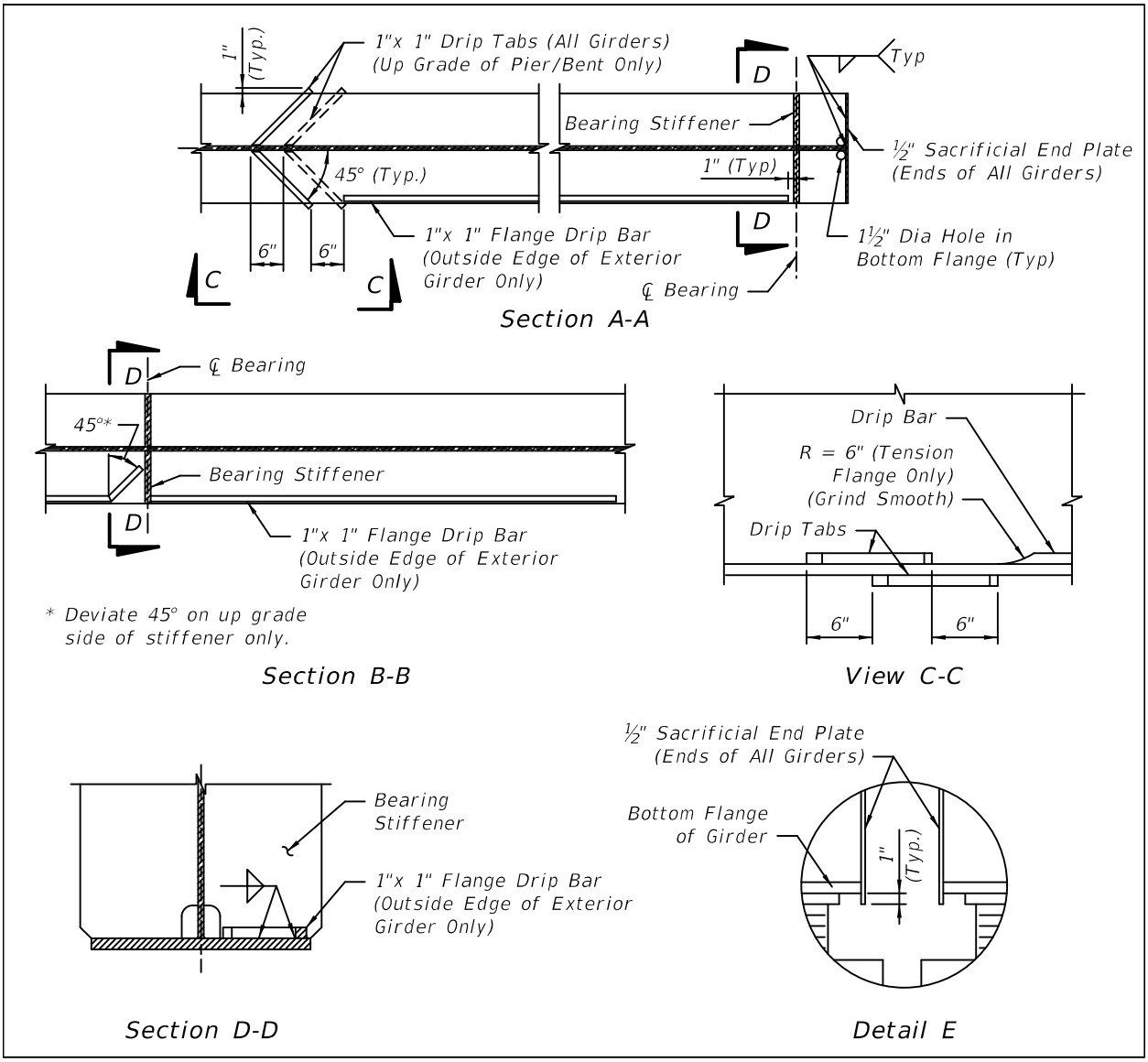

Figure 16.12-3 Weathering Steel Box Girder Details

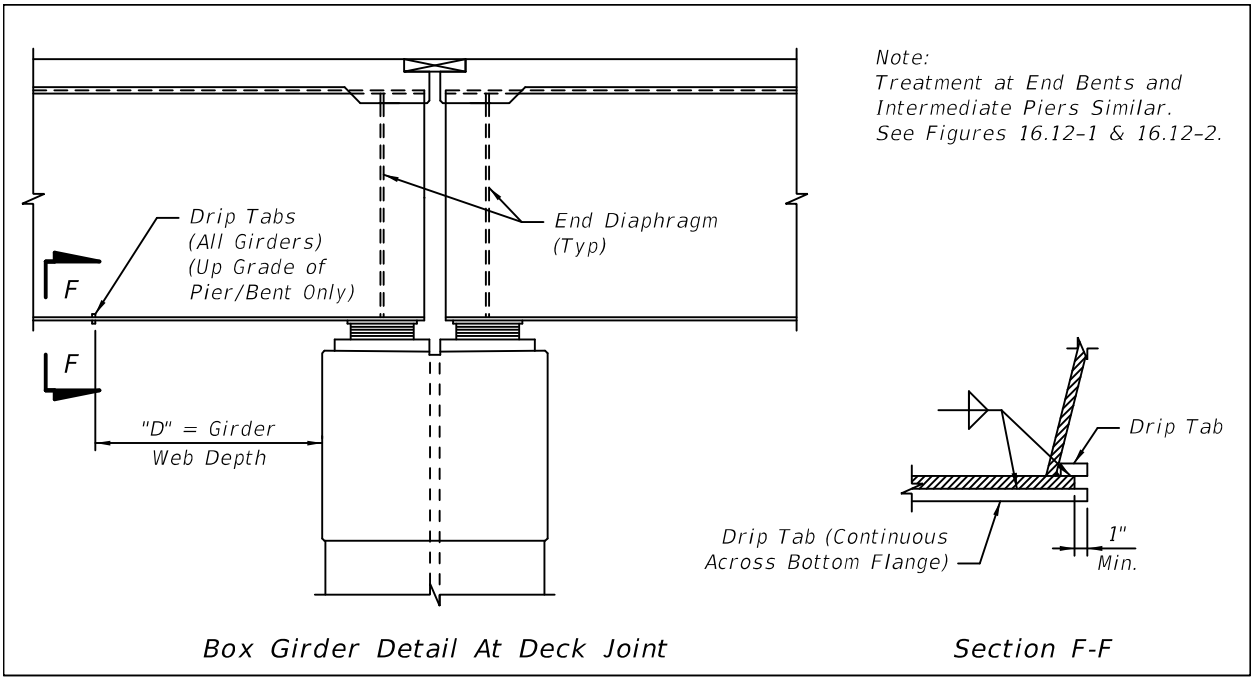

17 TYPICAL SECTION

17.1 GENERAL

A. The purpose of the Typical Section sheet is to show the dimensions for the bridge deck, beam spacing and roadway configuration. Reinforcement details belong on the Superstructure Section sheet(s).

B. The Typical Section sheet can be combined with the Pier Elevation sheet. This sheet should be titled Bridge Section sheet.

C. For an example illustrating the content and format of a completed Typical Section sheet, see the ***Structures Detailing Manual Examples***.

17.2 TYPICAL SECTION - DRAWING AND DETAILS

At a minimum, include the following in the Typical Section sheets:

A. Section of the bridge deck. Use a suitable scale for the drawing. If there are two bridges, show both sections. Break lines are allowed in the dimension and the drawing.

B. Right-of-way lines when bridge is being built on a new or shifted alignment. Show Temporary Construction Easement lines if applicable.

C. Station Line. Label PGL.

D. Dimensions for traffic railing widths, shoulder widths, lane widths, bike lane widths, sidewalks, median width and overall width. Include dimensioning of future lanes.

E. Existing bridge structure for widenings. Draw existing superstructure as dashed. Hatch or shade portions that are to be demolished.

F. Beam type, size and spacing. If spacing varies, indicate minimum and maximum dimensions. Reference appropriate ***Design Standards***.

G. Overhang distance. If overhang varies, indicate minimum and maximum dimensions.

H. Traffic Railing type. Reference the applicable ***Design Standards***. If more than one traffic railing is used (median, pedestrian, etc.) indicate each applicable ***Design Standards***.

I. Traffic Separator. Reference appropriate option in the ***Design Standards***.

J. Deck casting thickness.

K. Construction joints. Label construction phases consistently with the TCP and other sheets in the plan set.

L. Cross slope. If cross slope is in transition, show as "Varies".

M. Pier elevation. If pier elevation is combined with superstructure sheet, label sheet as Bridge Section.

18 ADA REQUIREMENTS

18.1 GENERAL

A. This chapter provides graphical representations of the preferred methods for compliance with the Americans with Disabilities Act (ADA) and Florida Accessibility Code. In general, special attention should be paid to sidewalks on bridges when:

1. Bridge or bridge approach grades are greater than 5%.
2. Drainage grates or scuppers are placed within the limits of the sidewalk.
3. Expansion joints are placed within the limits of the sidewalk.
4. Bridge cross slopes exceed 2%.

B. When required, include all details in the plans necessary to build the ramps and handrails based on accessibility code compliance.

C. See ***ADA Standards for Transportation Facilities*** for other facilities not covered in this chapter.

D. These guidelines are meant to apply to a broad range of situations. For situations where these guidelines will be difficult to implement, consult the DSDE for guidance.

18.2 RAMPS AND HANDRAILS - GRADES GREATER THAN 5% (Rev. 01/17)

Sidewalks on bridges must comply with ADA and Florida Accessibility Code. The following details are intended to address sidewalks with grades steeper than 5% and/or cross slopes greater than 2%. The following guidelines apply to sidewalks on bridges that meet these criteria:

A. For grades greater than 5%, ramps will be required. Provide landings and maximum grades as outlined in the ***ADA Standards for Transportation Facilities*** and the details shown in Figure 18.2-1.

B. Where ramps are required, handrails are required on both sides of the sidewalk. Place handrails at a constant distance from the landing/ramp surface. For aesthetic purposes, the pedestrian/traffic railing shall be constant throughout the bridge. Modify the height of the pedestrian/traffic railing to hide the ADA handrail. See Figure 18.2-2 and Figure 18.2-3.

C. Design handrails in accordance with ***SDG*** 6.8.

D. Show rails continuous over a minimum of three wall brackets. Space splices at 40'-0" centers maximum. Locate the center of a splice near the edge of a wall bracket.

E. Indicate with plan notes that the Contractor is required to submit the following to the Engineer for approval prior to fabrication:

1. Shop drawings with complete details including rail bracket and expansion joint locations. Indicate component details, materials, finishes, connections, and joining methods and the relationship to the adjoining work.
2. Summary of the materials for the proposed rail system, including mill analysis with certification by the producer that the parts are the alloys specified and meet the specifications called for. See ***Specifications*** Section 965.
3. The manufacturer's engineering design and data for the rail system and components signed and sealed by a Professional Engineer registered in the state of Florida.
4. The manufacturer's installation instructions and product data.

F. Materials and Finishes: Indicate the following materials and finishes requirements on the plans:

1. Rails and splice assemblies are to be fabricated from extruded aluminum pipe, Alloy 6061-T6 or 6063-T52 ASTM B 221. Provide Schedule 40 rails with nominal size of 1½ inches, 0.145 minimum wall thickness with a mill finish.
2. Provide wall brackets of extruded aluminum alloy6061-T6 or 6063-T52 ASTM B 221 with a mill finish.
3. When directed by the DSDE, galvanized steel may be substituted for aluminum pipe and wall brackets.

Modification for Non-Conventional Projects:
Delete ***SDM*** 18.2.F.3 and see the RFP for requirements.

4. Provide mechanical fasteners of the type and size required by the manufacturer's specification and design calculations.
   a. Provide anchor bolts for the brackets in accordance with ASTM F1554, Grade 36. Anchor bolts, nuts and washers must be hot-dipped in accordance with ***Specifications*** Section 962.
   b. Use stainless steel, ASTM F-593, Alloy Group 2 (316) for all fasteners and washers used at the splice assemblies and to mount the rails to the brackets.

G. Erect rails parallel to and 2'-10" above the top of pedestrian ramp as shown in Figure 18.2-3.

Figure 18.2-1 Maximum Slopes and Landing Spacing and Dimensions for Ramps

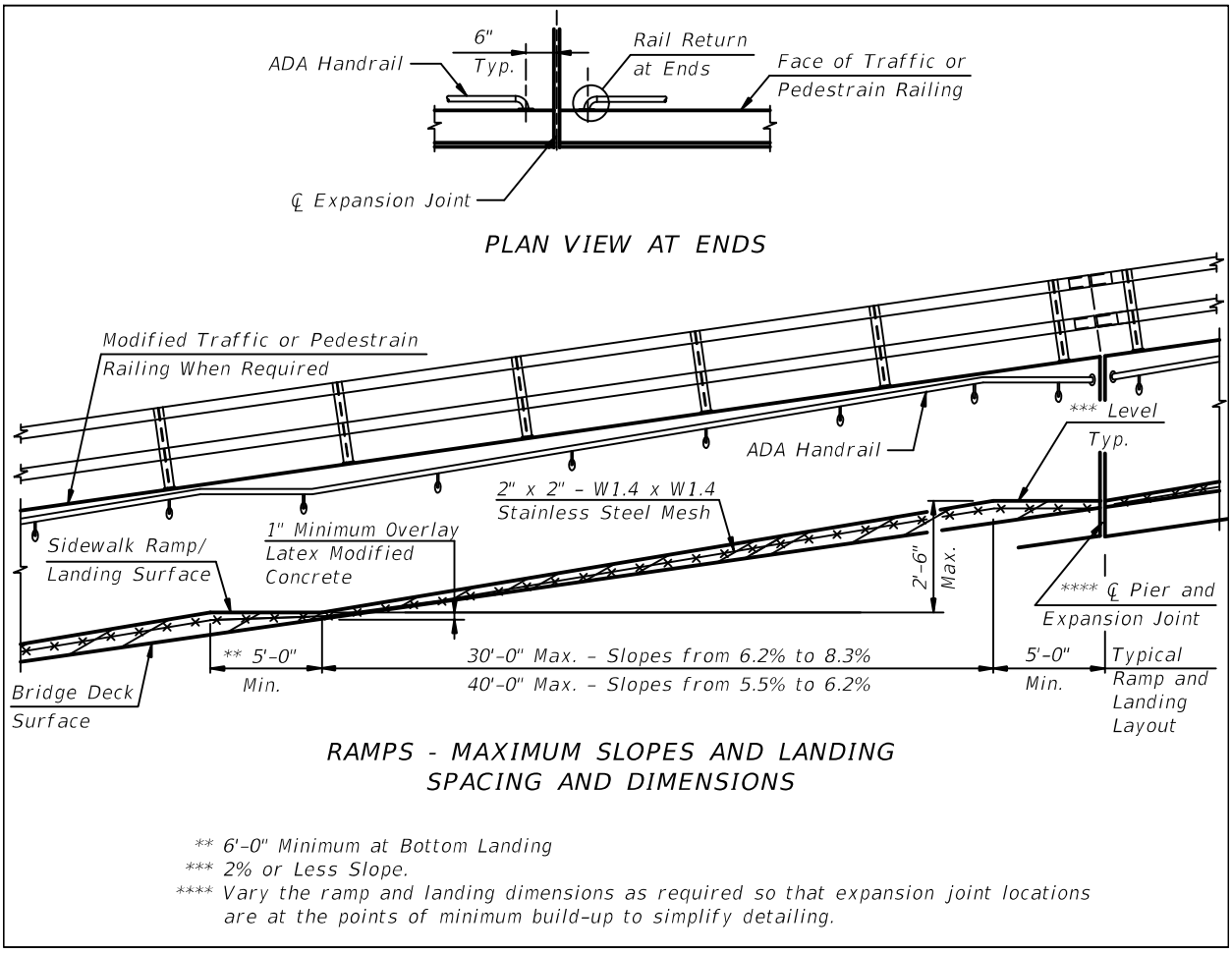

** 6'-0" Minimum at Bottom Landing
*** 2% or Less Slope.
**** Vary the ramp and landing dimensions as required so that expansion joint locations are at the points of minimum build-up to simplify detailing.

Figure 18.2-2 ADA Handrail Detail

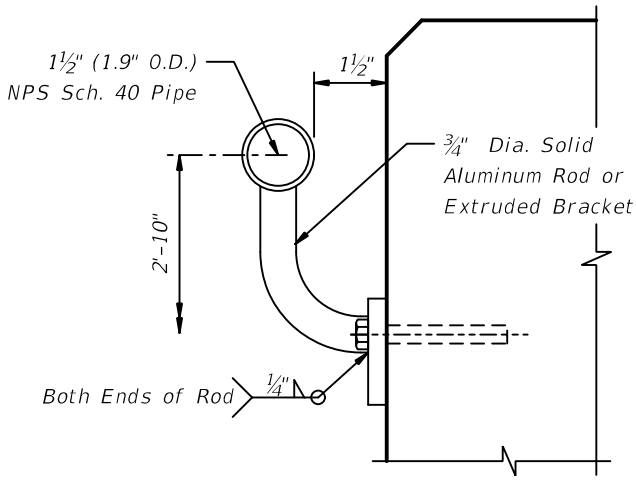

Figure 18.2-3 Bridge Section At Sidewalk With 42" F-Shape Traffic Railing)

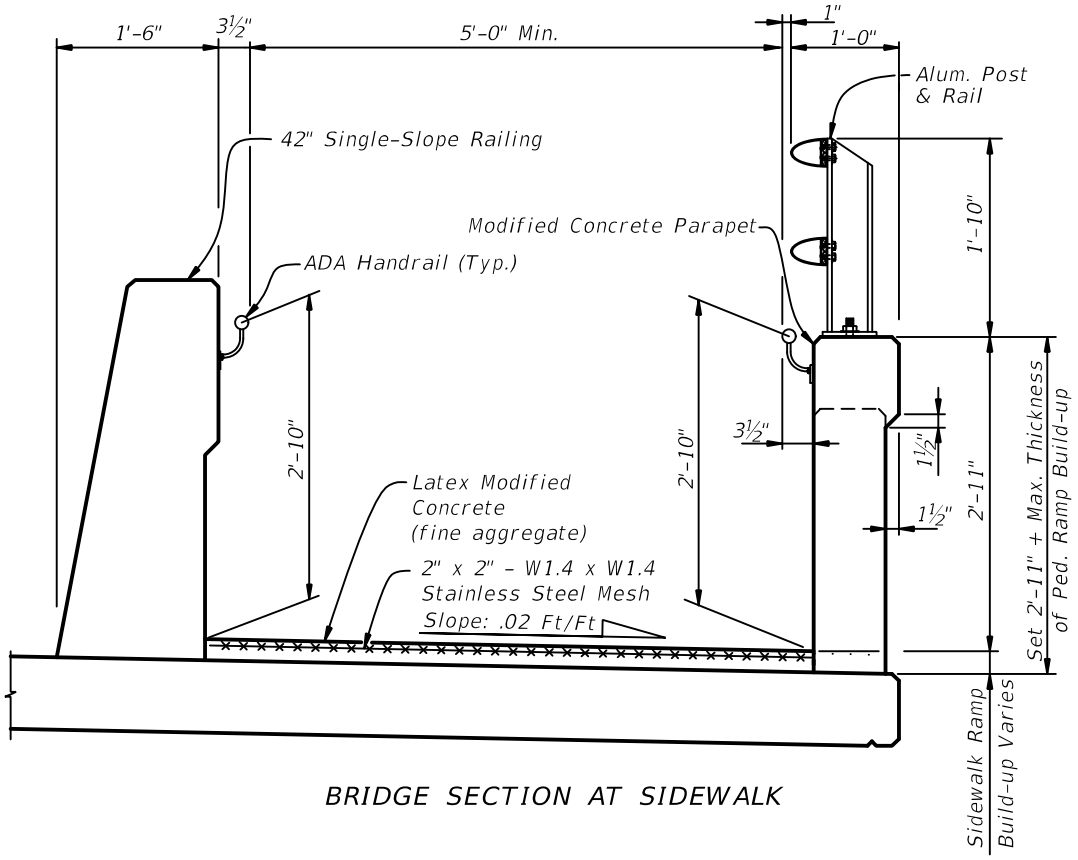

SIDEWALK RAMP BUILD-UP NOTES

1. Sand-blast or water-blast deck surface within limits of the sidewalk.
2. Remove all loose concrete and laitance in accordance with the manufacturer's recommendations.
3. Apply an approved epoxy bonding agent to the exposed concrete surface.
4. Overlay with latex modified concrete to the dimensions indicated for the special pedestrian ramp and landings.
5. Finish deck surface in accordance with Section 522.

18.3 DRAINAGE GRATES OR SCUPPERS

Drainage grates or scuppers that lie within the limits of the sidewalk are required to conform to ***ADA Standards for Transportation Facilities***. At a minimum, openings in gratings are to be no more than ½" wide in one direction. For surface requirements, see Figure 18.3-1.

Figure 18.3-1 ADA Surface Requirements

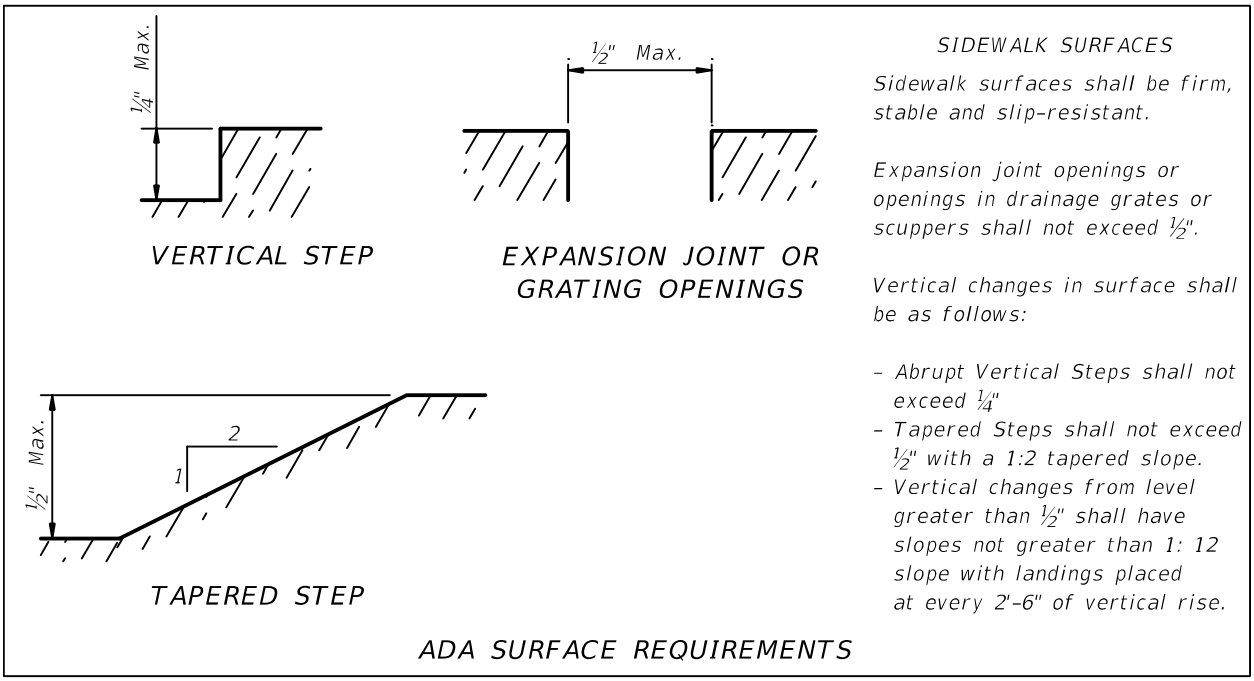

18.4 EXPANSION JOINTS ON BRIDGES

Expansion joints on bridges with sidewalks are addressed in ***Design Standards*** Index 21100 (Strip Seal Joints) and 21110 (Poured Joint with Backer Rod). Similar methods are required for bridges with large joints such as modular joints or finger joints. See Figure 18.3-1 for additional surface requirements.

18.5 CROSS SLOPES GREATER THAN 2% (Rev. 01/17)

The maximum cross slope for sidewalks on bridges is 2%. For bridges with a cross slope greater than 2%, the sidewalk must be modified to be in compliance. This can be achieved either by using a tapered build-up in the sidewalk portion of the bridge or by providing a change in cross slope at the gutterline. See Figure 18.5-1.

Figure 18.5-1 Sections at Sidewalk With Bridge Cross Slope Greater Than 2%

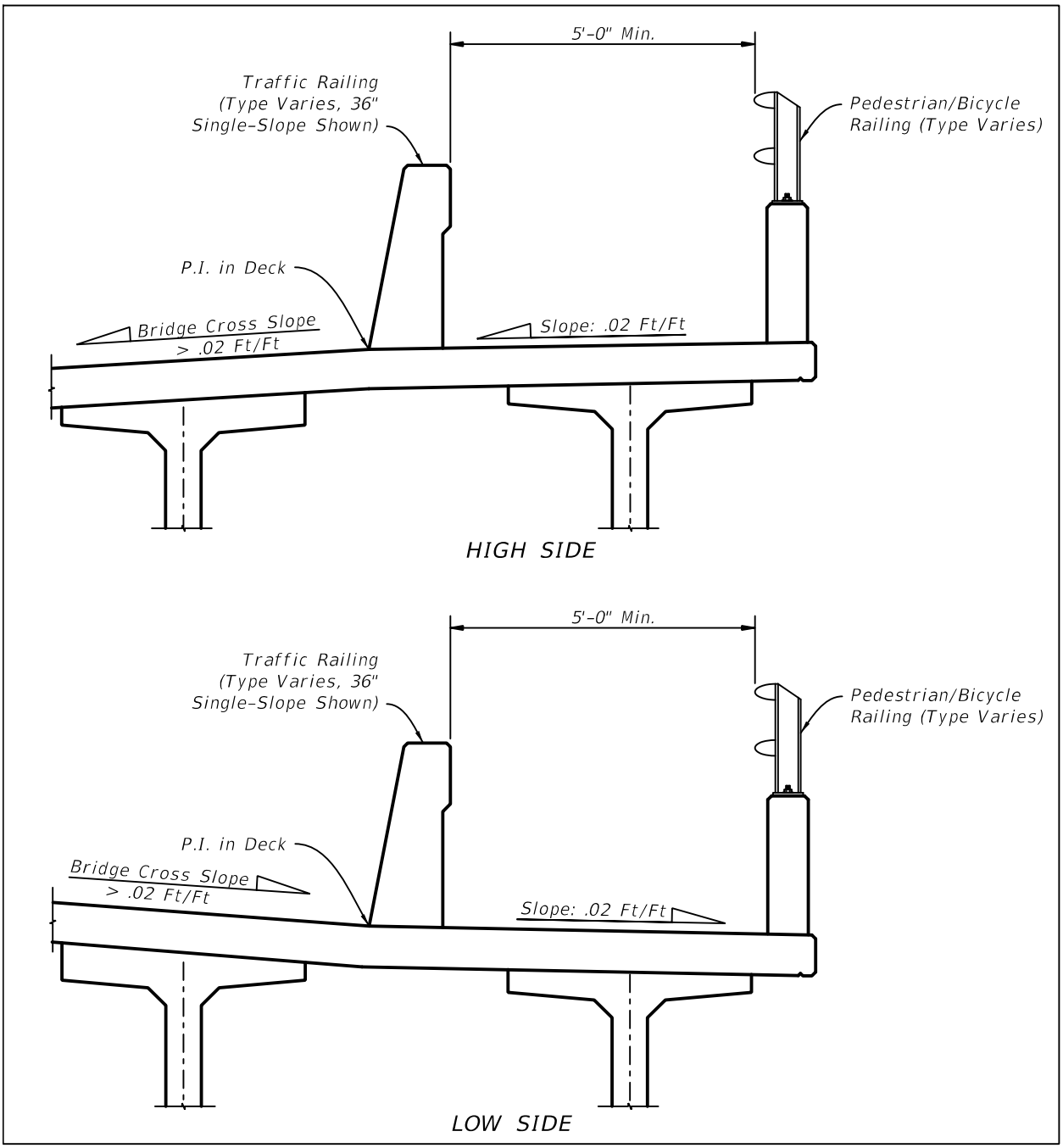

19 RETAINING WALLS

19.1 General

A. Wall drawings will include wall control drawings, wall details, data tables and other pertinent information required to layout and construct the retaining walls. These guidelines are applicable to permanent and temporary, cast in place and precast retaining walls. Wingwalls and cofferdams are not covered in this chapter.

B. Determine wall type during the BDR phase for accurate cost estimates. Wall type selection is based on wall height, wall settlement, durability factors and environmental conditions. To determine which FDOT wall types are applicable for a specific location, see the Permanent Retaining Wall Selection Guidance in ***SDG*** 3.12.

Modification for Non-Conventional Projects:
Delete ***SDM*** 19.1.B and insert the following: B. Wall type selection is based on wall height, wall settlement, durability factors and environmental conditions. To determine which FDOT wall types are applicable for a specific location, see the Permanent Retaining Wall Selection Flowchart in ***SDG*** 3.12.

C. See ***PPM*** Volume 1, Chapter 26 for phase submittal requirements.

Modification for Non-Conventional Projects:
Delete ***SDM*** 19.1.C.

D. For examples illustrating the content and format of completed Wall sheets, see the ***Structures Detailing Manual Examples***.

E. For requirements related to the design of walls, see ***SDG*** Chapter 3.

F. See ***PPM*** Volume 1, Chapter 30 for plan content requirements when full design details **are** required to be shown in the plans, e.g. for non-proprietary walls and select proprietary walls.

G. See ***PPM*** Volume 1, Chapter 30 for plan content requirements when full design details **are not** required to be shown in the plans, e.g. for most proprietary walls.

H. For projects with multiple walls or complex wall geometry, include a comprehensive plan view layout. Use a scale appropriate to encompass the entire project or enough to convey relative wall locations, including all temporary and permanent MSE and non-MSE wall systems labeled within a single sheet.

I. Provide slope pavement and joints sealed with low modulus silicone sealant adjacent to end bents as shown in Figure 19.1-1. Show similar details for similar joints between walls and end bents with or without slope pavement.

J. Provide joints sealed with low modulus silicone sealant between spread footing abutments and adjacent retaining wall copings as shown in Figure 19.1-2. Show complete details of troughs, gutters and/or pipes required per ***SDG*** 3.13.2.

Commentary: Providing an easy-to-maintain joint seal between retaining walls and adjacent end bents or spread footings is critical to the long term performance and preservation of the wall and bridge foundation.

Figure 19.1-1 Slope Pavement Details at End Bents

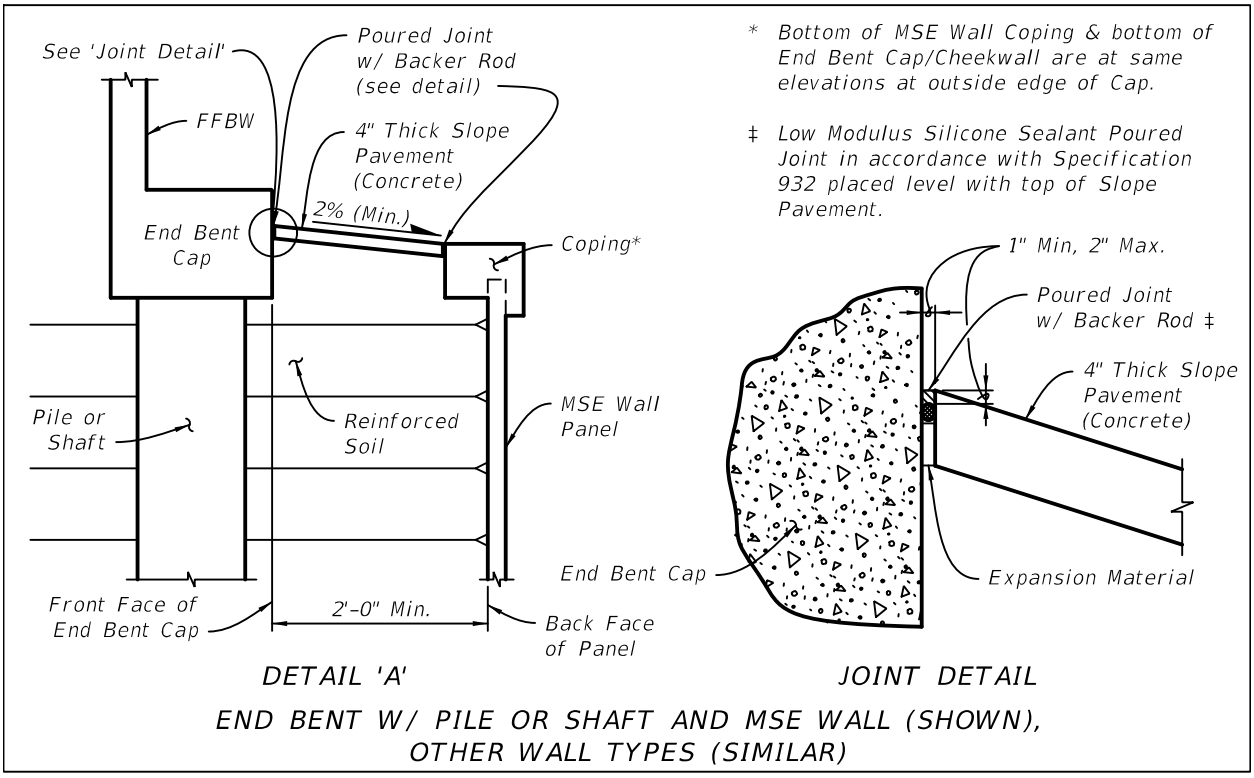

Figure 19.1-2 Spread Footing Abutment Details

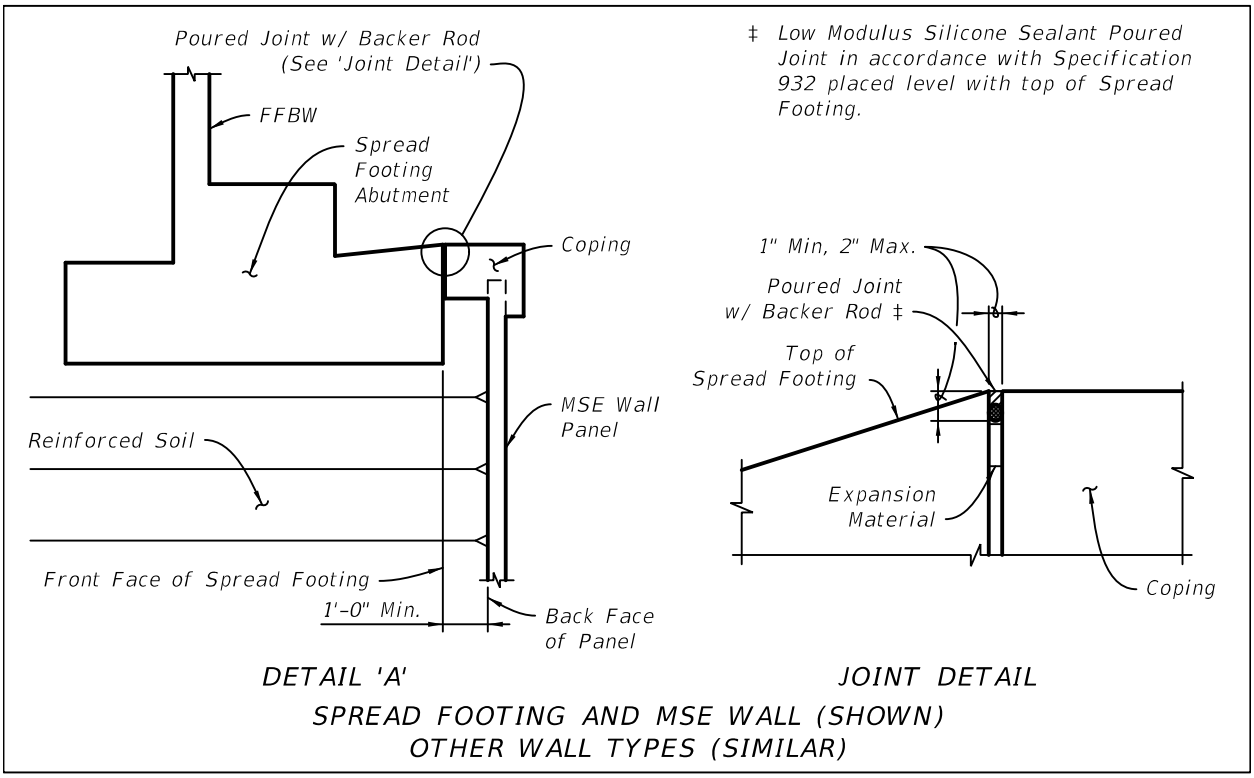

19.2 Wall Control Drawings (Rev. 01/17)

Wall control drawings are required to depict the location and geometrics of the wall layout. For walls listed on the ***Approved Products List*** (***APL***), project specific wall shop drawings will be required and created based on information shown in the wall control drawings. Wall control drawings will consist, at a minimum, of general notes, plan views, elevation views and details. Wall control drawings are required for all retaining wall types with the exception of non-critical temporary walls. See ***SDM*** 19.7 for critical temporary wall definition. Discuss and determine wall type in the Bridge Development Report. Preliminary wall control drawings must be submitted with the Bridge Development Report for temporary critical walls and 30% plans for all other walls.

Modification for Non-Conventional Projects:
Delete ***SDM*** 19.2 and insert the following: Wall control drawings are required to depict the location and geometrics of the wall layout. For walls listed on the ***Approved Products List*** (APL), project specific wall shop drawings will be required and created based on information shown in the wall control drawings. Wall control drawings will consist, at a minimum, of general notes, plan views, elevation views and details. Wall control drawings are required for all retaining wall types with the exception of non-critical temporary walls. See ***SDM*** 19.7 for critical temporary wall definition.

19.2.1 Wall Control Drawings - Plan Views

Wall plan views contain many callouts for stations and offsets. Provide station and offsets relative to the front face of the retaining wall. At a minimum, include the following on the wall control drawing plan views:

A. Existing features such as roads, drainage, utilities, fences.

B. Proposed drainage structures, piping and utilities. Be aware of the Department's policy on placing utilities within retained embankment. See the Utilities Accommodation Manual. Also see the ***Storm Drain Handbook*** and ***SDM*** Chapter 22 for policy regarding drainage structures within retaining wall embankment.

C. Sloped embankments. Indicate direction of slope and toe of slope. Indicate the slope in the following format: V:H.

D. Station Line with horizontal curve data. Label station line and indicate direction of stationing.

E. All begin and end wall locations. Begin wall locations should be at left side of the developed elevations and end wall stations should be shown on the right side of developed elevations. See Figure 19.2.1-1.

Figure 19.2.1-1 Typical Wall Naming Convention

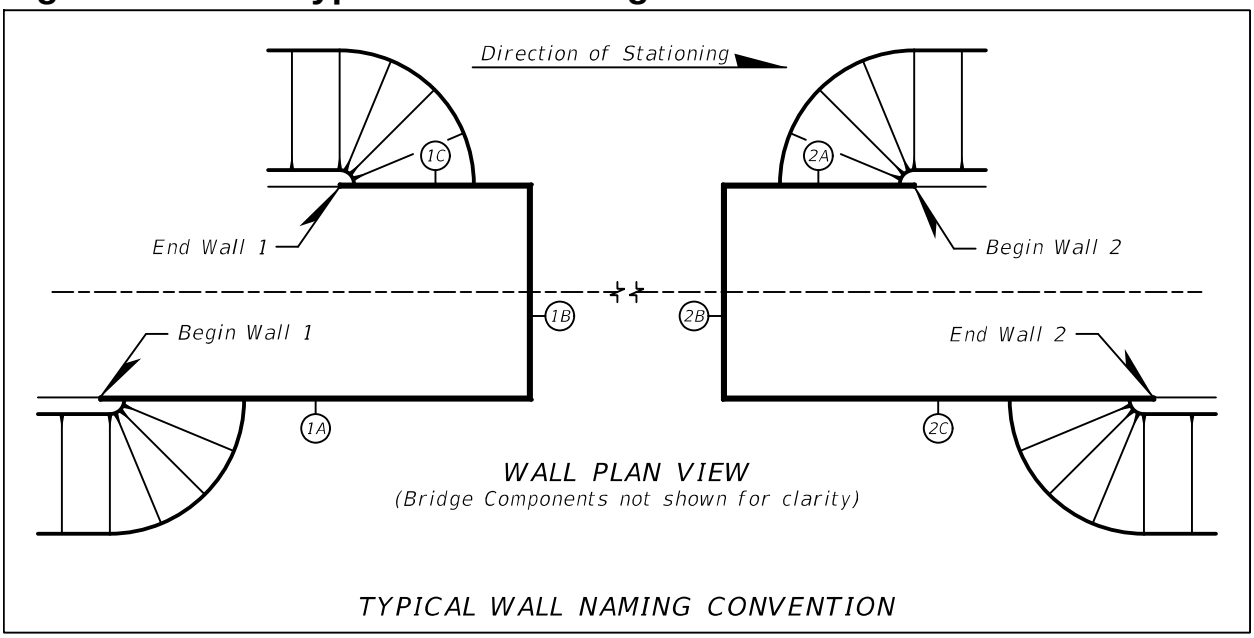

F. Station and offsets for all wall corners, PC and PT stations and any other changes in wall alignment.

G. All PC and PT stations for wall geometry. Indicate radius of curvature. This data may be different from the horizontal curve data of the Station Line.

H. Front face of retaining wall.

I. Stations for adjacent bridge features (FFBW, Begin/End Approach, etc.).

J. Wall names. Establish a wall naming convention for projects with multiple walls. Designate wrap-around walls with a single name using suffixes for wall segments (e.g., W-1a, Wall 1a, etc.).

K. Right-of-way lines. Include temporary construction easements.

L. Riprap, slope pavement or toe of slope limits.

M. North arrow. Show in upper right corner.

N. Matchlines. Clearly label matchlines with appropriate stationing.

O. Boring locations.

P. Berm dimensions. See Figure 19.6-4 for minimum berm dimensions.

Q. Light pole pedestal, sign and signal supports station and offset.

R. Architectural feature foundations (e.g., towers, etc.).

S. Location of section views.

T. Location of sign structures and lights. Indicate applicable Design Standard for wall pedestal.

U. Phase construction limits. Develop details where necessary. Specify the appropriate joint type for adjacent phases, i.e. slip joint for permanent MSE walls, construction or expansion joint for C.I.P. walls, etc.

V. For additional wall control drawing requirements based on wall type, see ***SDM*** 19.5 through ***SDM*** 19.8.

19.2.2 Wall Control Drawings - Elevation Views

Develop elevation views for wall control drawings showing contiguous faces of the wall in a single plane, regardless of curvature or corners. Orient elevation views so that they show the front face of the retaining wall. At a minimum, include the following on elevation views for wall control drawings:

A. Stationing with elevations shown at the spacings below and at begin/end wall stations and at all wall corners, PC and PT stations and any other changes in wall alignment. More frequent elevations may be required. Tabulate if necessary. Include the elevations at the following locations:

   1. Proposed ground line at 50 foot maximum spacings.
   2. Existing ground line at 100 foot maximum spacings.
   3. Top of footing or leveling pad elevation at each step.
   4. Top of coping or wall at 50 foot maximum spacings.
   5. At slope breaks in top of wall or coping.

B. Show the following:

1. Proposed ground line (shown as solid).
2. Existing ground line (shown as dashed).
3. Top of footing or leveling pad elevation.
4. Top and bottom of coping.
5. Top of traffic railing/noise wall and transitions. Indicate the applicable traffic railing Design Standard.
6. Wall penetrations (station, offset, invert elevation).
7. Light pole pedestal locations.
8. Sign and signal locations.
9. Vertical scale (on both sides).
10. Design scour depth.
11. Existing utilities and proposed drainage structures and piping. Indicate disposition of adjacent utilities (e.g., placed out of service, relocate, to remain, etc.).
12. Water table. Include pay item notes stating that dewatering may be necessary and that cost of dewatering shall be incidental to the cost of the wall.

C. For additional wall control drawing requirements based on wall type, see ***SDM*** 19.5 through ***SDM*** 19.8.

19.2.3 Wall Control Drawings - General Notes and Details

Develop project specific wall details and show on the sheets ahead of the wall plan and elevation sheets. The details that are required to be shown in the contract plans vary by wall type. Details for walls listed on the ***APL*** will be fully developed in shop drawings. Include the following in the retaining wall General Notes sheets:

A. Section through end bent showing tie-in dimensions between end bent and retaining wall.

B. Section through wall showing gutters, ditches, copings, limits of wall volume (reinforced zone for MSE walls), leveling pad, footing and other features necessary to construct the wall or generate wall shop drawings.

C. Elevation view showing elevations of the cheekwall/coping/top of wall at the end bent. Include details showing the tie-in between end bent and retaining wall.

D. Isolation details from architectural features, nearby footings, culverts and other potential hardpoints to account for different settlements between the structure(s) and the wall.

E. With the exception of gravity walls, walls associated with Design Standards will have data tables in the General Notes and Details sheet(s). Data table cells can be found in the Structures Bar Menu. See the ***Instructions for Design Standards (IDS)*** for instructions on filling these data tables.

F. A note stating that the locations of utilities shown on the wall plans are approximate. Refer to the Utility Adjustment sheets for details.

G. Material requirements.

19.3 Cast in Place Cantilever Walls

When cast in place cantilever walls are specified in the plans, use the Department's ***LRFD Retaining Wall Program*** for analysis and design of cantilever retaining walls. Output from this program is used to fill-out the wall data table. Design cast in place retaining walls in accordance with ***SDG*** 3.13 and ***Design Standards*** Index 6010. Include the Retaining Wall Data Table in the plans. See the ***Instructions for Design Standards (IDS)*** for instructions on filling these data tables and other plan content requirements in addition to ***SDM*** 19.2.

Modification for Non-Conventional Projects:
Delete ***SDM*** 19.3 and insert the following: Use of ***Design Standards*** Index 6010 is optional. Follow the applicable minimum plan content requirements outlined in ***SDM*** 19.2.

19.4 Gravity Walls

When cast in place gravity walls are specified in the plans, use ***Design Standards*** Index 6011. Follow the applicable minimum plan content requirements outlined in ***SDM*** 19.2 above and the ***Instructions for Design Standards (IDS)***.

Modification for Non-Conventional Projects:
Delete ***SDM*** 19.4 and insert the following: Use of ***Design Standards*** Index 6011 is optional. Follow the applicable minimum plan content requirements outlined in ***SDM*** 19.2.

19.5 Permanent Sheet Pile Walls

Permanent sheet pile walls can be either steel or concrete, tied back or cantilever. Use the appropriate sheet pile wall data table cell found in the Structures Bar Menu.

19.5.1 Concrete Sheet Pile Walls

When concrete sheet pile walls are specified in the plans, develop wall control drawings and details for a concrete wall cap. Concrete sheet pile walls in excess of 15 feet high are typically anchored to a dead man, anchor pile or soil anchor. Work concrete sheet pile wall control drawings with ***Design Standards*** Index 6040 series. In addition to the plans content requirements shown in the ***Instructions for Design Standards (IDS)*** and in ***SDM*** 19.2 above, include the following:

Modification for Non-Conventional Projects:
Delete first paragraph of ***SDM*** 19.5.1 and insert the following: When concrete sheet pile walls are specified in the plans, develop wall control drawings and details for a concrete wall cap. Concrete sheet pile walls in excess of 15 feet high are typically anchored to a dead man, anchor pile or soil anchor. Use of ***Design Standards*** Index 6040 series is optional. In addition to the plans content requirements shown in ***SDM*** 19.2 above, include the following:

A. Project specific concrete wall cap. See Figure 19.5.1-1. If a wall-mounted traffic or pedestrian railing is specified, indicate the applicable Design Standard.

B. Indicate starter pile and pile type and orientation. Refer to ***Design Standards*** Index 6040 for applicable pile types.

C. Tie-back locations if wall is tied back. Include anchor rod, deadman, anchor pile or soil nail details as necessary. In cases where the anchor rods may be deformed by settlement of the overlaying embankment, or where anchor rods are buried more than a third of the wall height, isolate the anchor rod its entire length. See Figure 19.5.1-2.

Figure 19.5.1-1 Section Through Sheet Pile Wall Cap

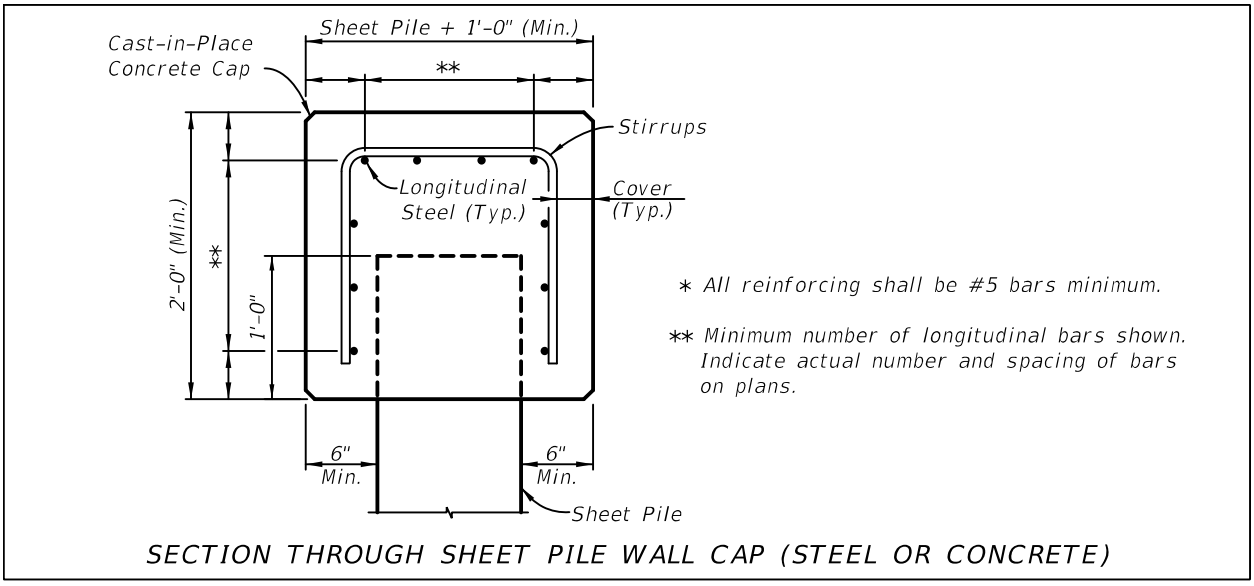

Figure 19.5.1-2 Anchor Rod Detail

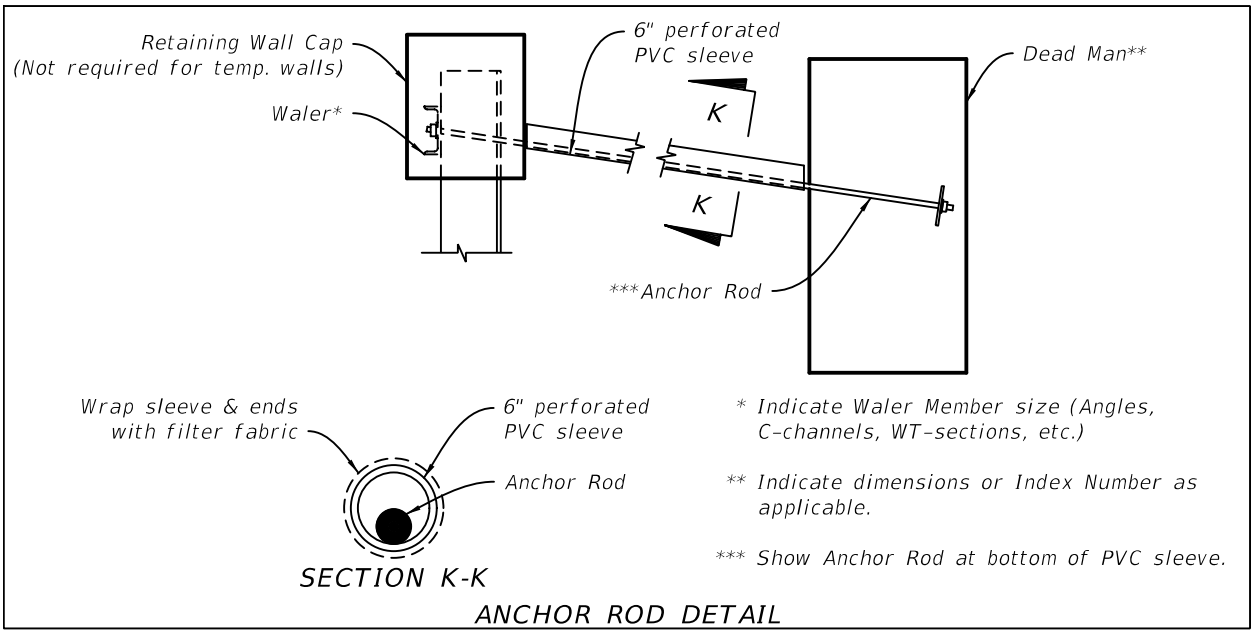

D. Dead man or anchor pile locations. Reference the same Station Line used for wall layout. Include details for anchor rods. If a standard concrete pile is used for dead man, reference applicable Design Standard and include pile data table. Alternatively, anchor piles may consist of a starter pile with a cast-in-place cap.

E. Where concrete sheet pile walls are anchored to the end bent cap, provide sufficient details on the end bent sheets for blockouts, swedged rods, etc. to show method of attachment of sheet pile wall anchor rod.

F. Provide notes alerting the contractor when installation by jetting alone will not be practical.

G. In the control drawing elevation view, show top of cap, top of pile, and the pile tip elevations along the length of the wall.

H. In the control drawing plan view, show wall cap expansion/control joint spacing.

I. When wall anchors are required:

   1. Coordinate anchor locations to miss proposed foundation elements of adjacent structures such as bridges.

   2. Coordinate soil anchor locations to miss existing adjacent buried structures.

   3. Provide a construction sequence including when to place/proof test anchor and when to place backfill similar to Figure 19.7.2-1.

19.5.2 Permanent Steel Sheet Pile Walls

Permanent steel sheet pile walls can be either cantilever or tied back, depending on site conditions, wall height and loading. When permanent steel sheet pile walls are specified in the plans, fully developed wall control drawings and concrete cap details are required. In addition to the minimum plan content requirements outlined in ***SDM*** 19.2 above, include the following:

A. Project specific concrete wall cap. See Figure 19.5.1-1. If a wall-mounted traffic or pedestrian railing is specified, indicate the applicable Design Standard.

B. Tie-back locations if wall is tied back. Include anchor rod, deadman, anchor pile or soil nail details as necessary. In cases where the anchor rods may be deformed by settlement of the overlaying embankment, or where anchor rods are buried more than a third of the wall height, isolate the anchor rod its entire length. See Figure 19.5.1-2.

C. Deadman or anchor pile locations. Reference the same Station Line used for wall layout. Include details for anchor rods. Anchor piles typically consist of a single steel sheet pile with a cast-in-place cap.

D. Steel sheet pile wall data table for either anchored or cantilever steel sheet pile walls. This table can be found in the Structures Bar Menu.

E. Location of waler(s).

F. Drainage details.

G. Coating requirements if coatings and/or overall treatment are different than what are required by ***Specifications*** Section 560. See ***SDG*** 3.1 and ***Specifications*** Section 560 for standard coating requirements.

H. Depict the sheet pile rolled section. See ***SDG*** 3.1 for sacrificial thickness requirements. In order to comply with Buy America provisions, a specific wall shape that meets the minimum section requirements must be indicated in the plans. If domestically-made shapes are not available, fully detail built-up sections such as king posts or cover plates to satisfy section requirements. See ***SDG*** 1.1.5 for additional information on Buy America requirements.

I. In the control drawing elevation view, show top of cap, top of pile, and the pile tip elevations along the length of the wall.

J. In the control drawing plan view, show wall cap expansion/control joint spacing.

K. When wall anchors are required:

   1. Coordinate anchor locations to avoid conflicts with proposed foundations elements of adjacent structures such as bridges.

   2. Coordinate soil anchor locations to miss existing adjacent buried structures.

   3. Include a construction sequence including when to place/proof test anchor and when to place backfill similar to Figure 19.7.2-1.

19.6 Permanent MSE Walls (Rev. 01/17)

Mechanically stabilized earth walls (MSE) are often the most economical wall type for heights over 8 feet. Typically, MSE wall proprietors must be listed on the ***APL*** to supply MSE wall products on FDOT projects. MSE wall shop drawings will be produced by the wall vendor selected for the project and reviewed by the EOR. Project specific wall shop drawings will be created based on details shown in the wall control drawings. Shop drawing requirements can be found in ***Specifications*** Section 548. When developing wall control drawings for MSE walls, the following considerations must be addressed in addition to the requirements outlined in ***SDM*** 19.2:

A. Include Permanent Retaining Wall System Data Table cells in the plans. The cells can be found in the Structures Bar Menu. See the ***Instructions for Design Standards (IDS)*** for instructions on filling these data tables.

B. Leveling pad locations. Step leveling pad when depth below finish grade exceeds five feet while maintaining two feet below grade minimum. At locations where MSE wall wraps back along the roadway at the end bent, do not step leveling pad. Instead, show leveling pad at a constant elevation. See Figure 19.6-1.

C. Provide wall offsets to the front face of MSE wall panel. Provide top of wall elevations to the gutterline (if present) or top of coping. Clearly indicate the locations where wall offsets and elevations are provided.

D. Take into account shoulder cross slope transition and sidewalk cross slope transition as roadway approaches the bridge when detailing top of coping/gutterline elevations. See Figure 19.6-2 and Figure 19.6-3. Use spot elevations in the Plan View to ensure shoulder transitions are accurately detailed in the plans.

E. Avoid acute corners with interior angles less than 70°. Walls with interior angles less than 70° must be designed as bin walls, resulting in greater costs and time. These should be avoided if possible.

F. Where MSE wall does not wrap around the end bent, raise the wall coping to the top of end bent cheekwalls at either side of the end bent. This will avoid the need for wingwalls. This includes median areas between twin bridges where wall is continuous between bridges. See Figure 19.6-4 and Figure 19.6.1-2 for details.

G. Where MSE wall terminates into fill slope, extend traffic railing and wall a minimum of 5 feet beyond fill slope limits. This will reduce the potential for drainage-related issues at the wall termination point. See Figure 19.6-1 for details.

H. When settlement issues require two-phased walls, provide details in the plans showing surcharge loading schedule, surcharge volumes, drainage details, instrumentation requirements such as piezometer, settlement plate, or inclinometer as required by the geotechnical engineer. See ***SDG*** 3.12 for details on the construction of two-phased walls.

I. Flowable fill is not allowed to be used in any MSE wall application without SDO approval.

J. Slip joints are required at the following locations:

1. Phased construction limits where the MSE wall is constructed in separate phases; these locations should be consistent with phasing dimensions found in the construction sequencing sheets.
2. Limits between acute corners designed as bin walls and the adjacent walls.
3. At hardpoints which pass through MSE wall such as storm drainage, adjacent footing of separate structure or other feature with settlement characteristics different from the MSE wall settlement characteristics.
4. For widenings, specify a slip joint between the existing MSE wall and proposed MSE wall, where the two walls are to interface.

K. For widening when placing MSE walls adjacent to existing fill slopes, include details in the plans to install MSE wall straps. Assume strap length approximately 0.80 of wall height to determine limits of excavation and to evaluate the need for temporary sheet pile walls. See ***SDM*** 19.7.2.

L. For widening when placing MSE walls adjacent to existing MSE walls where distance between walls is less than the required strap length (approximately 0.70-0.80 of wall height), a bin wall system to attach the existing wall system may be required. Include bin wall details in the plans.

M. Isolation details - Isolate MSE wall systems from adjacent structures to accommodate differential settlements.

Figure 19.6-1 Wrap-Around MSE Wall Details

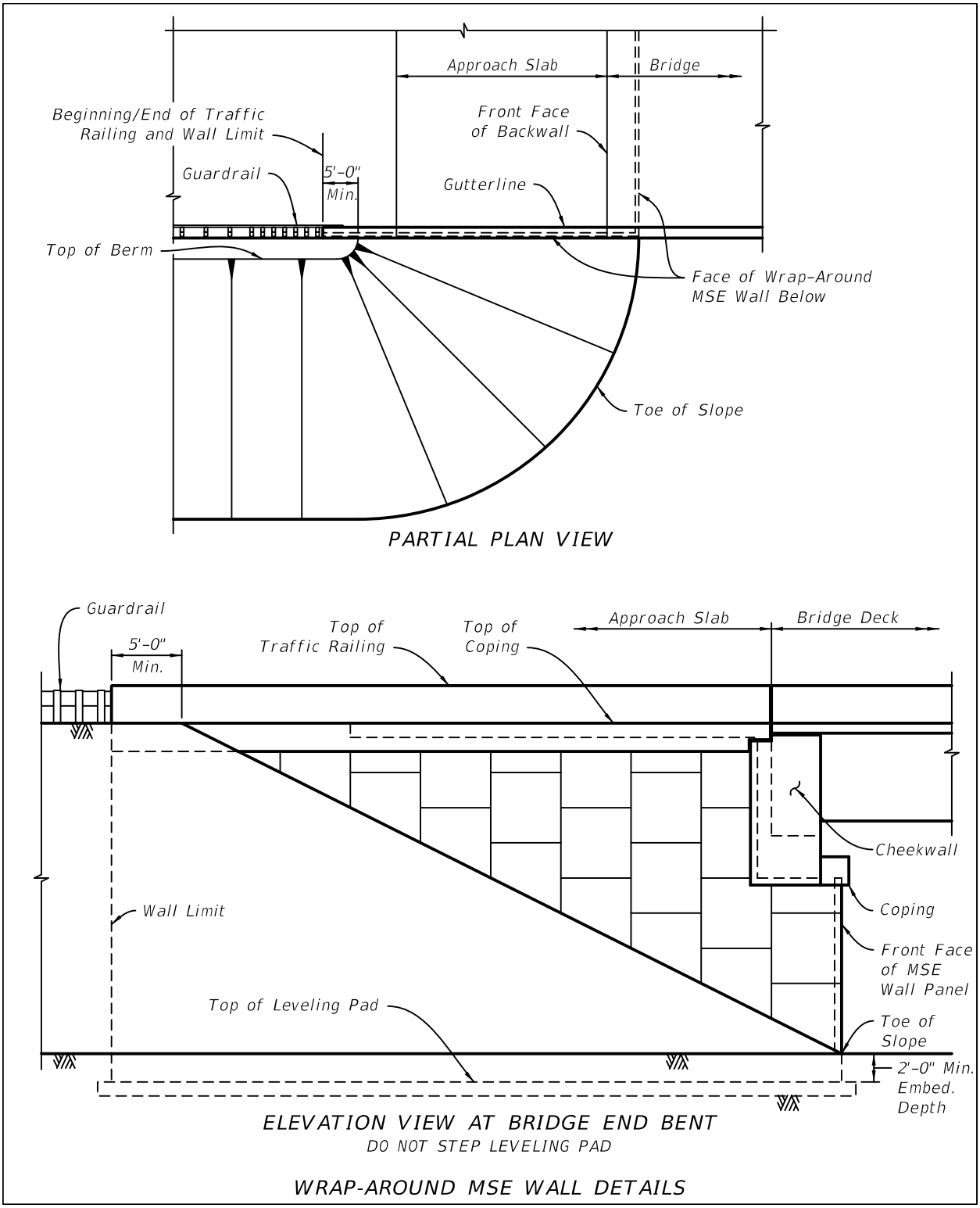

Figure 19.6-2 Cross Sections at Bridge Approaches

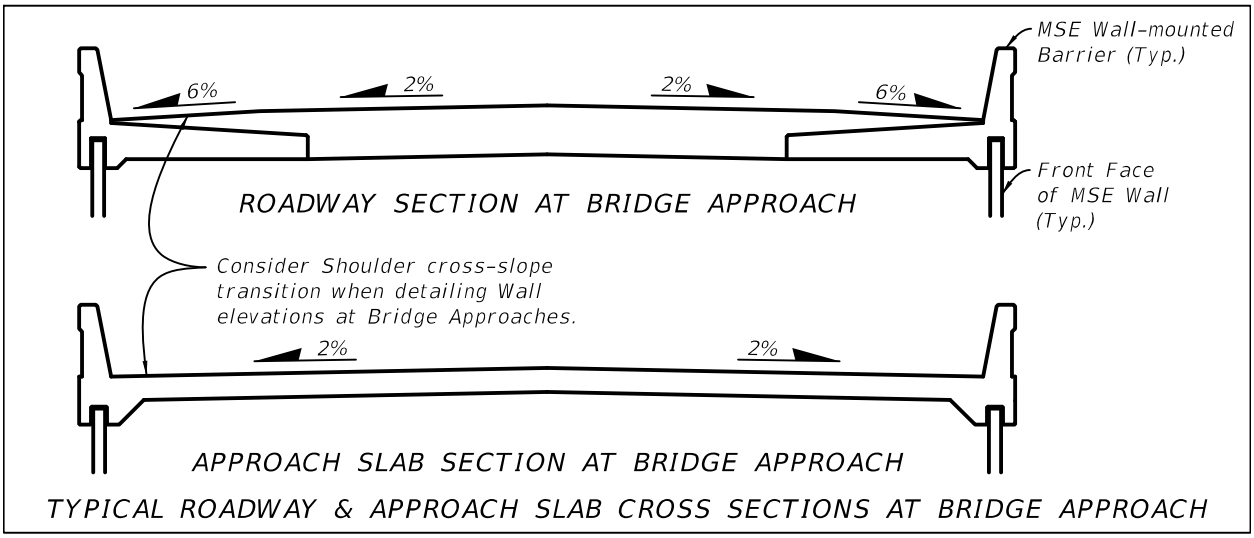

Figure 19.6-3 Cross Sections at Bridge Approaches with Sidewalks

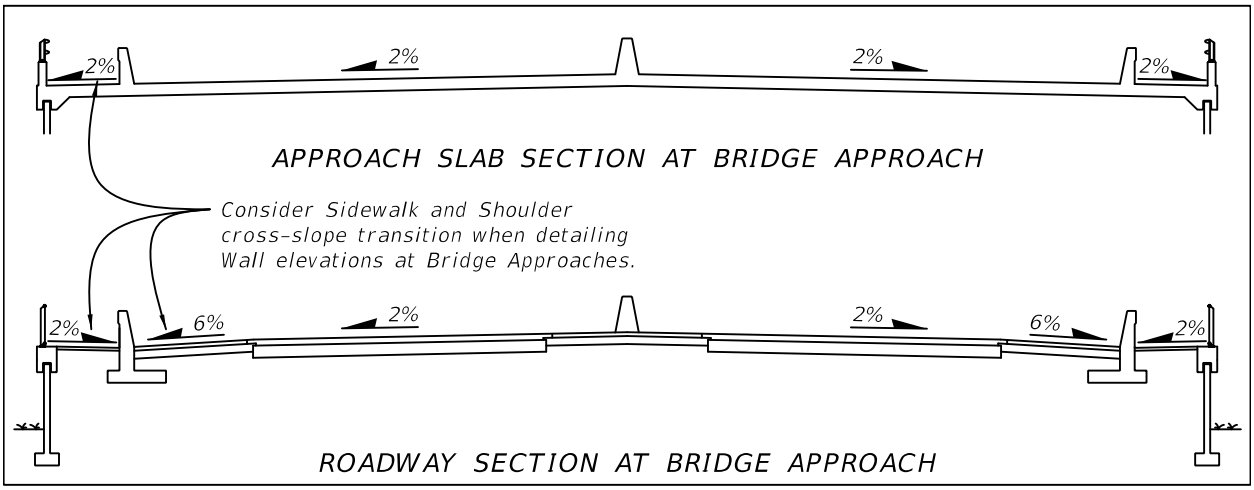

Figure 19.6-4 MSE Wall Details

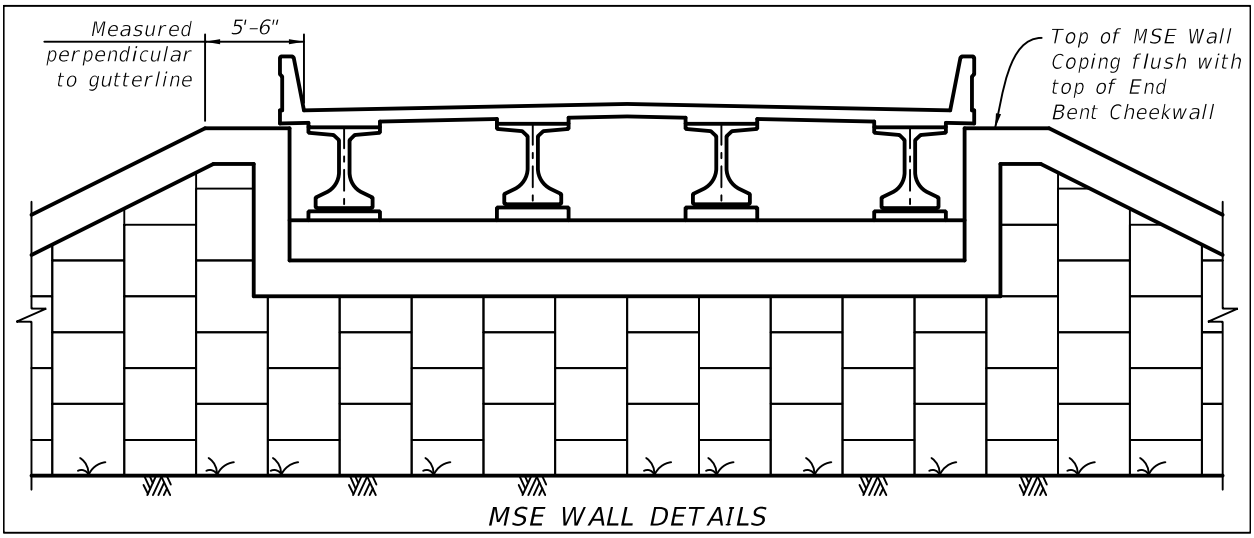

19.6.1 Future Widenings (Rev. 01/17)

Include wall details which facilitate bridge widening in the future. What follows are some of the more common approaches to meeting this requirement.

A. For single bridges, incorporate a wrap-around MSE wall as shown in Figure 19.6.1-1. This will facilitate future widening by allowing future excavation to place the MSE wall straps for the widened section, minimizing the need for critical temporary sheet pile walls. Do not step leveling pad of the portion of the wall parallel to the roadway.

Figure 19.6.1-1 Single Bridge with Future Widening

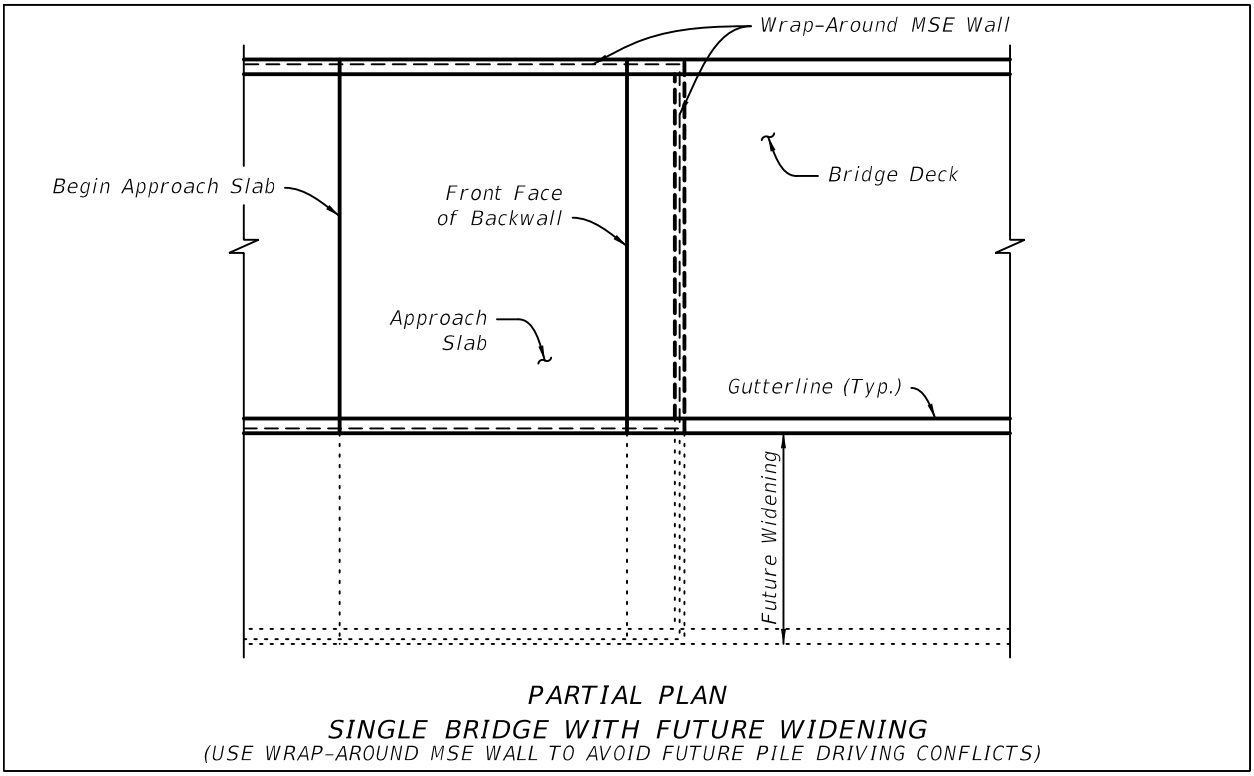

B. For twin bridges where MSE walls are used in the median between the bridges, assume the bridges will be widened in the future and provide the following minimum provisions to accommodate the future widening in the median:

1. Construct MSE walls partial-height (preferred) or full-height between bridges. See Figure 19.6.1-2 and Figure 19.6.1-3. Design wall soil reinforcement in the median to match the worst-case loading condition, typically the future condition. Show the ultimate build-out for the wall design in the Wall Control Drawings and clearly indicate those portions that are to be constructed "by others" in the future.

2. Place sand-filled casings within the reinforced soil volume to facilitate future pile installation. This will avoid conflicts with soil reinforcement during construction of the future widenings. Minimum diameter of the casings shall be 6 inches greater than the largest dimension of the pile cross section (the diagonal for square piles) used in the twin bridges. Match the spacing of the piles used in the twin bridges. Indicate in the plans that casings are to be filled with sand and capped.

Figure 19.6.1-2 Full Height MSE Wall Details with Allowance for Future Inside Widening

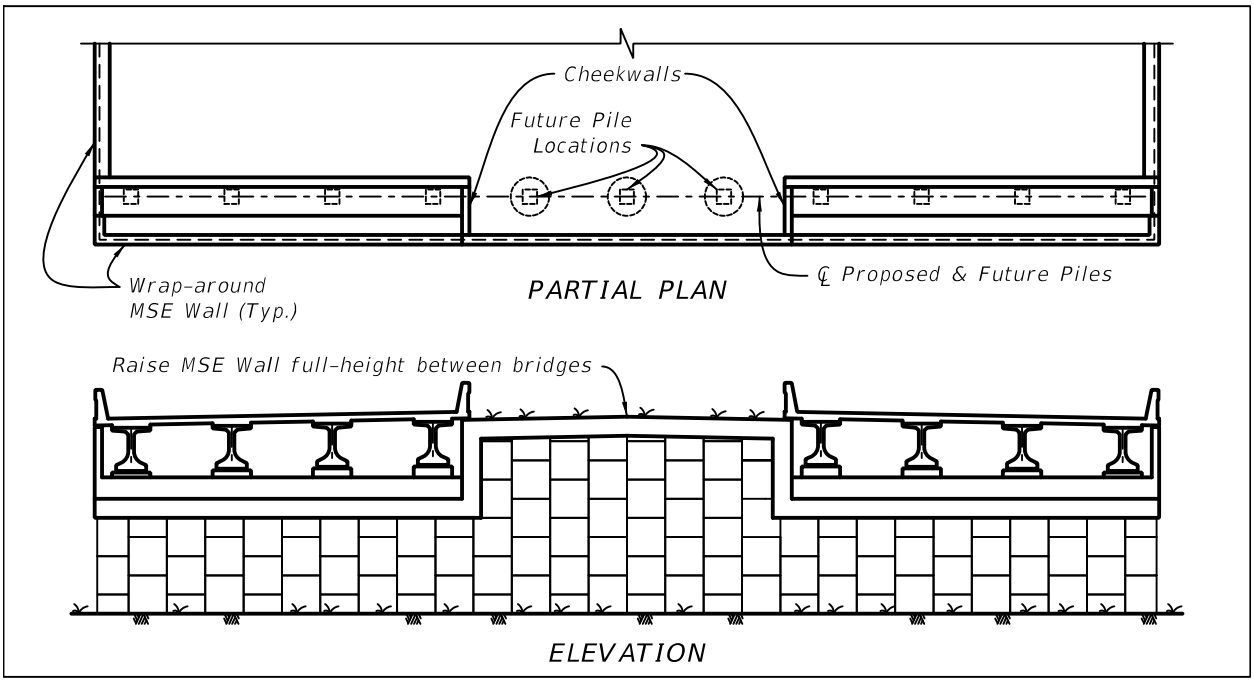

Figure 19.6.1-3 Partial Height MSE Wall Details with Allowance for Future Inside Widening

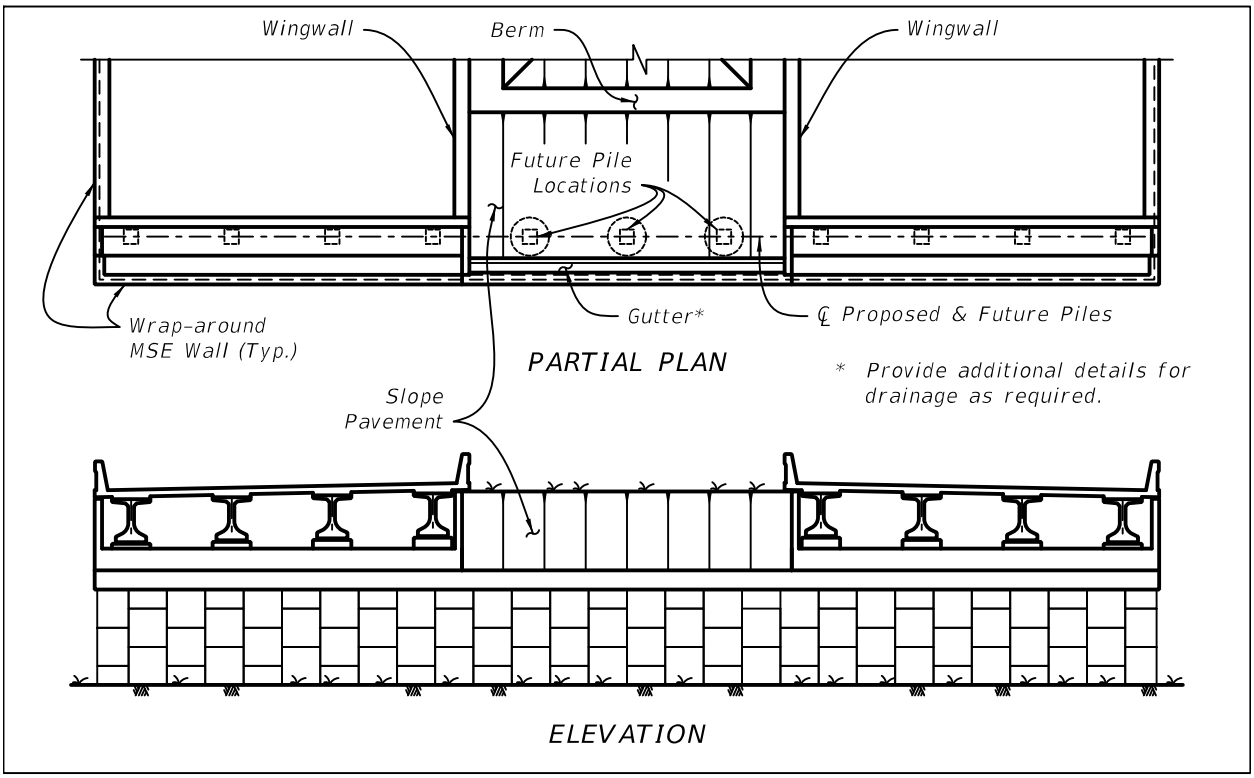

C. For roadways that are supported by MSE walls, consider placing the vertical and horizontal limits of the wall in locations that can accommodate future widening of the supported road. See Figure 19.6.1-4. Design soil reinforcement for the future loading condition.

Modification for Non-Conventional Projects:
Delete ***SDM*** 19.6.1.C and see the RFP for requirements.

Figure 19.6.1-4 Section Through Roadway Supported by MSE Wall

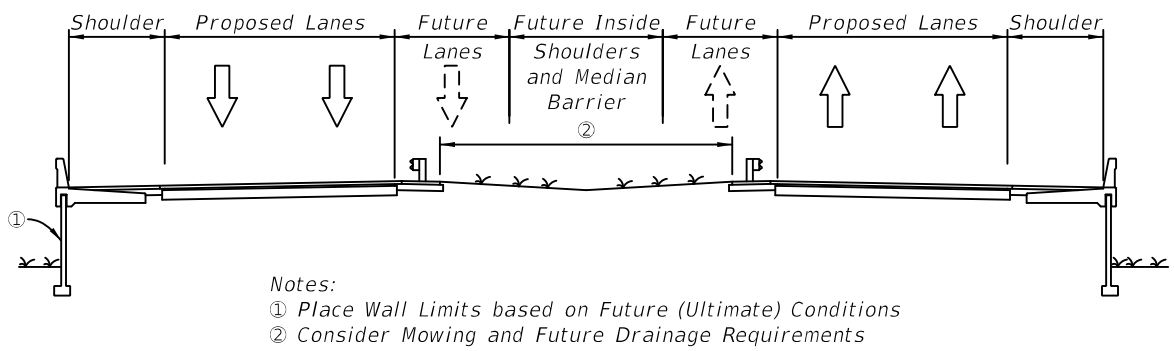

SECTION THROUGH ROADWAY SUPPORTED BY MSE WALL
(Inside Widening Shown; Outside Widening similar)

Modification for Non-Conventional Projects:
Delete Note 1 from ***SDM*** Figure 19.6.1-4 and see the RFP for requirements.

19.7 Temporary Walls (Rev. 01/17)

Base temporary wall type selection on wall height, cut/fill condition and designation as critical. Figure 19.7-1 defines Critical Temporary Walls in the vicinity of travel lanes. See also ***PPM***, Volume 1, Chapter 30. Coordinate with the project's utility coordinator when determining if an existing utility is to be relocated or protected by a Critical Temporary Wall. Finalize this determination early in the design phase to ensure the proper wall type is selected. Preliminary Critical Temporary Wall control drawings must be included in the BDR. See Construction Sequence Example 3 of the ***Structures Detailing Manual Examples*** for an example of Critical Temporary MSE and tied-back sheet pile walls used in phased construction.

Modification for Non-Conventional Projects:

Delete ***SDM*** l9.7 and insert the following:

Base temporary wall type selection on wall height, cut/fill condition and designation as critical. Figure 19.7-1 defines Critical Temporary Walls in the vicinity of travel lanes. Coordinate with the project's utility coordinator when determining if an existing utility is to be relocated or protected by a Critical Temporary Wall. Finalize this determination early in the design phase to ensure the proper wall type is selected. See Construction Sequence Example 3 of the ***Structures Detailing Manual Examples*** for an example of Critical Temporary MSE and tied-back sheet pile walls used in phased construction.

Figure 19.7-1 Location of Critical Walls with Respect to Traffic Lanes

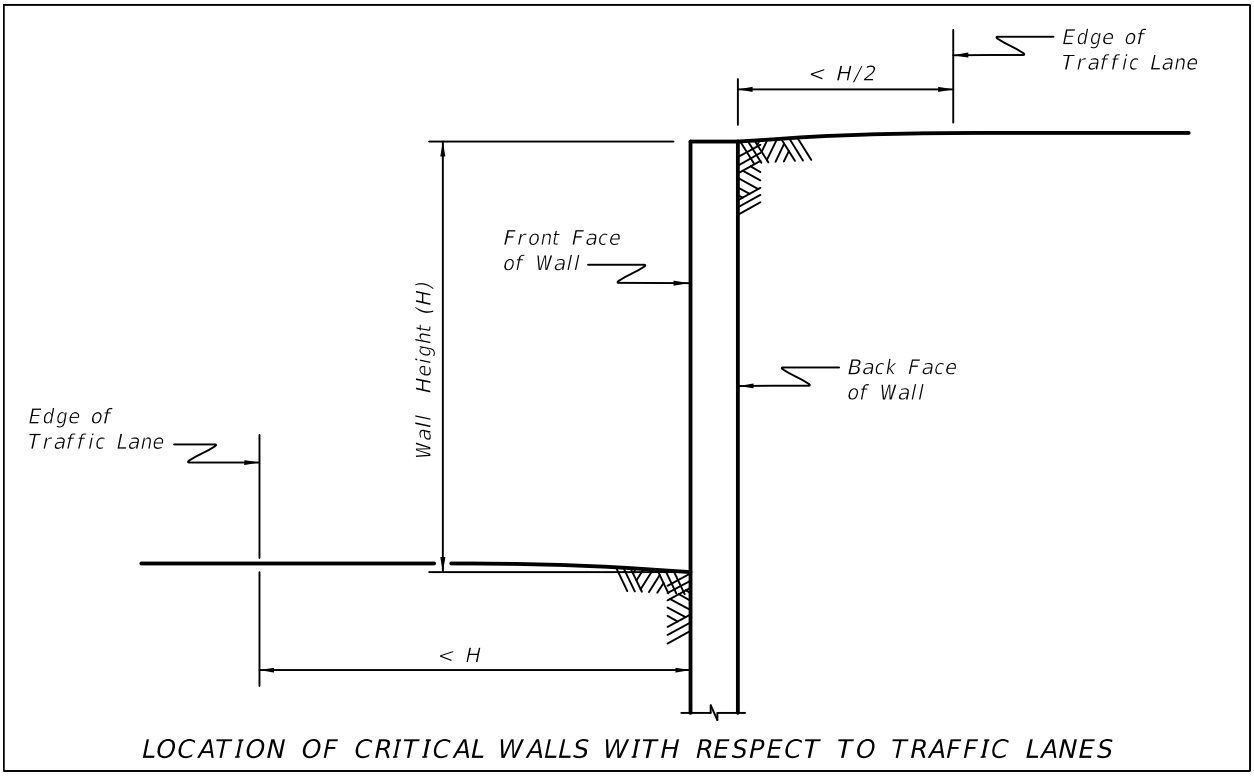

19.7.1 Temporary MSE Walls

Temporary MSE walls are designated as Type 3 walls in the ***APL***. Temporary MSE walls are typically used in fill conditions and abandoned in place. When temporary MSE walls are specified in the plans, include the appropriate data table cell. Critical temporary MSE walls must comply with ***Design Standards*** Index 6030. Refer to the plans content requirements shown in the ***Instructions for Design Standards (IDS)*** for temporary MSE walls and in ***SDM*** 19.2 above for wall control drawings.

Modification for Non-Conventional Projects:
Delete ***SDM*** 19.7.1 and insert the following: Temporary MSE walls are typically used in fill conditions and abandoned in place. When temporary MSE walls are specified in the plans, include the appropriate data table cell. Use of ***Design Standards*** Index 6030 is optional. Follow the applicable minimum plan content requirements outlined in ***SDM*** 19.2.

19.7.2 Temporary Sheet Pile Walls (Rev. 01/17)

Temporary sheet pile walls can be used in either fill or cut conditions. Due to their relative ease of installation, sheet pile walls are common in projects that are phase-constructed. Sheet pile walls in excess of approximately 15ft in height are tied back using a combination of soil anchors and walers for tiebacks. If tiebacks are used, provide a construction sequence. See Figure 19.7.2-1 for a typical phased construction sequence using critical temporary tied-back steel sheet pile walls. Figure 19.7.2-1 is an alternative to Construction Sequence Example 3 of the ***Structures Detailing Manual Examples***.

Critical temporary sheet pile walls require complete design details in the contract plans, including walers, tiebacks, wall cap, etc. When critical temporary sheet pile walls are specified in the plans, include the appropriate sheet pile wall data table cell.

Wall control drawings, details or signed and sealed designs are not needed when non-critical temporary sheet pile walls are specified in the plans. Show and label the expected location of the non-critical temporary sheet pile wall(s) on the appropriate sheet, typically the Foundation Layout sheet.

Figure 19.7.2-1 Alternate Wall Construction Sequence

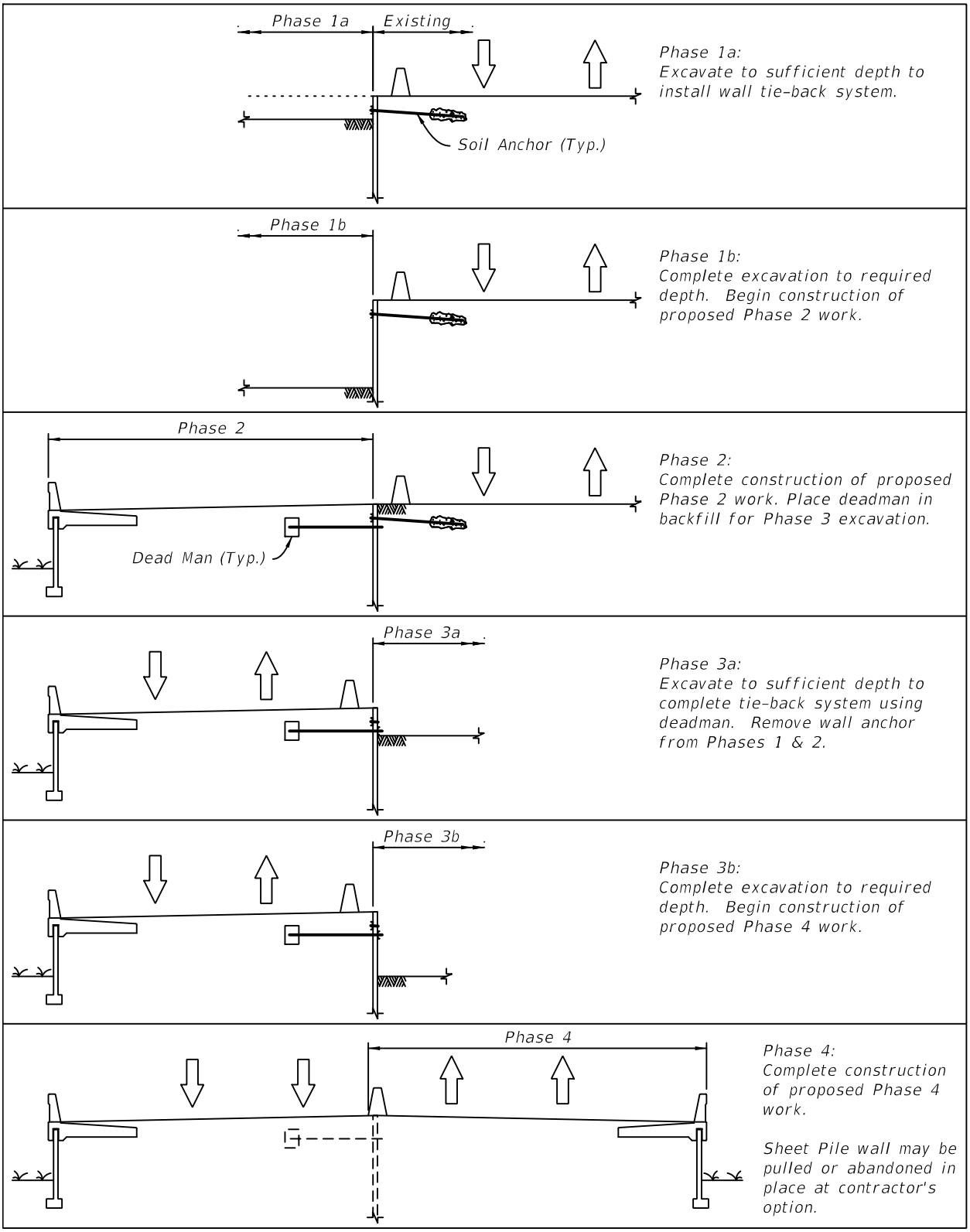

19.8 Soldier Pile Walls

Soldier pile walls offer a suitable alternative when a rock layer is near the ground surface, such as the Fort Thompson Layer, presenting a challenge to constructing other more traditional wall types. Timber lagging is only permitted for use in temporary soldier pile walls. When timber lagging is utilized, include a note alerting the contractor to the possibility of dewatering if high ground water is anticipated during construction. Indicate tie-back requirements if any, including layout of tiebacks or soil nails.

For soldier pile walls consisting of steel or prestressed concrete piles and precast concrete panels:

A. Show top-of cap, top of pile, top of panel, and tip of pile elevations in the wall control drawing elevation view.

B. Show pile spacing and panel layout in the wall control drawing plan view.

   1. Allow a gap between adjacent panels to facilitate the jetting of the panels into place and jetting tolerances.

   2. Address soldier pile placement and batter tolerances to ensure proper fit-up.

   3. Address method of installing piles. Since precast soldier pile wall systems are selected due to the presence of hard rock layers located below the bottom of the precast panels, preforming is typically called for in the plans.

20 SEGMENTAL BRIDGES

20.1 General

A. Segmental bridges are inherently complex to design and build. They require a coordinated effort between designers and detailers in order to develop integrated plans that address all design, detailing and constructability issues. The information contained herein is only part of the requirements necessary to successfully accomplish this task. For additional requirements see ***SDG*** Chapter 4.

B. Structural segmental drawings and details will be used by fabricators and contractors for the production and erection of segmental bridges erected by span-by-span or balanced cantilever methods. This chapter does not cover spliced or drop-in-girders or incrementally launched bridges.

C. The sheets outlined in this chapter are only a partial list and do not constitute the total sheets required for a complete submittal.

D. General Considerations

1. In general, provide a uniform segmental design that maximizes the reuse of formwork, reinforcing jigs, and casting cells. This approach will minimize cost, provide uniform aesthetics and maximize production rates through the use of assembly line fabrication processes. Examples include:

   a. Core Form: For small projects with minimal project variability, a single core form may be all that is necessary. For large projects with large project variability, a second core form size may be required.

   b. Post-tensioning Bulkhead and Shear Key Layout. For small projects with small project variability a single P.T. bulkhead form and single shear key layout may be all that is necessary. For large projects with large project variability, a second P.T. bulkhead form may be required.

Modification for Non-Conventional Projects:
Delete ***SDM*** 20.1.D.1.

2. Designing for Project Variability: During the Bridge Development Report Phase, select and dimension the segmental box shape to accommodate all of the structural and geometric demands of the project. Provide a design that accommodates all load demands, roadway section widths, geometry constraints, span lengths, etc.

Modification for Non-Conventional Projects:
Delete ***SDM*** 20.1.D.2 and insert the following: 2. Designing for Project Variability: Select and dimension the segmental box shape to accommodate all of the structural and geometric demands of the project. Provide a design that accommodates all load demands, roadway section widths, geometry constraints, span lengths, etc.

Figure 20.1-1 Reinforcing Jig for Variable Depth Segment

3. Precast Segment Weights: When proportioning precast segments, consider the effect of segment weight on hauling and erection equipment costs. The Contractor's equipment overhead costs are based on the heaviest precast segment on the project. For instance, typically split pier segments are utilized such that the weight of the pier segment half is closer to the weight of the typical or expansion joint segment located within the span. For especially large bridge components, cast-in-place pier segments with closure pours may be more cost effective than precast segments especially when erection equipment costs are considered.

4. Bridge Drainage System. Ensure that the segments can accommodate the bridge deck drainage systems. Design bridge drainage system as an integral part of the segmental design. Whenever possible, locate drainage deck inlets near the pier. Common problems to avoid when laying out the drainage system are:

   a. Conflicts between the drainage inlets and the negative moment tendons on balanced cantilever bridges.

   b. Conflicts between the drainage piping and the pier segment diaphragm post-tensioning and reinforcing steel.

   c. Conflicts between the drainage inlets and transverse post-tensioning.

   If required, provide local thickening of the underside of the box wing and widening of the pier column flare width to accommodate the drainage inlet and piping. Refer to ***SDM*** Chapter 22 for more details.

5. Construction access: Verify construction access for transportation, handling and the erection of all segments. Verify capacity of existing structures along likely haul routes.
6. Segment Length and height: When segments are to be transported by truck, limit segment lengths so that segments are able to travel within a roadway lane. Limit segment height including the traffic and pedestrian railing reinforcement so that segments can be delivered under overpasses.

20.2 Segment Designation / Segment Layout Sheet

The Segment Designation Sheet is required for all segmental bridges regardless of the construction type. At a minimum, include the following on the Segment Designation Sheet:

A. Elevation View of the Bridge. The Elevation View shall include the following:
   1. Abutment and Pier locations.
   2. Dimensions showing the following: overall span lengths, number of a particular type of segment with overall lengths (e.g. 13 Segments @ 10'-0" = 130'-0"), closure joint, pier segment (pier segment halves), overall bridge length and segments with anchor blocks, horizontal deviations and vertical deviations.
   3. Segment joint number.
   4. Segment label and type with a corresponding legend(s) (e.g., "P" - Pier Segment, "E" - Expansion Joint Segment, "T"- Typical Segment, "C. J." - Closure Joint Segment, "D" -Deviation Segment, "HD" - Horizontal Deviation Segment, etc.). Some examples are listed below:
      a. Example of segment label for span by span: 2N-T3 where "2" is the Span Number, "N" is the Girder Designation (Northbound or Southbound), "T" is the Segment Type (T for typical), "3" is for the segment number.
      b. Example of segment label for balanced cantilever: 5-12U where "5" is the pier number, "12" is the segment number, "U" is Up Station or Down Station.
      c. Provide legend for segment identification and designate segment types.

B. Provide legend and designate which segments are cast with access openings, bridge drainage inlets, light pole pedestals, temporary top slab construction access holes, etc.

C. Provide the following note or similar: "Span lengths given are horizontal projections along the centerline of girder. Segment lengths given are chord lengths along centerline of girder."

20.3 Superstructure Drawings - Segment Dimension Sheets

The Segment Dimensions Sheets include the following sheets: Typical Segment Dimensions, Deviation Segment Dimensions, Expansion Joint Segment Dimensions, and Pier Segment Dimensions. Provide the following information for each of the segment types:

A. Typical Segment Dimension Sheet

1. Cross section with traffic and pedestrian railings.
2. Dimension for overall width of the top slab and horizontal string of top slab dimensions. Include dimensions for railings, dimension to PI of web and top slab, dimensions to angle breaks in the soffit, dimension to centerline of the box, haunch thickness, drip groove, etc.
3. Dimension overall width of bottom slab and horizontal string of bottom slab dimensions. Provide dimensions to drain holes, angle breaks in the bottom slab soffit, dimensions to centerline of the box, etc.
4. Dimension overall height of box and dimension top slab thickness, bottom slab thickness, haunch thickness, web thickness, etc.
5. Slope of web. If web thickness varies with height, provide slope for inside and outside face.
6. Dimension for all fillet radii.
7. Variables may be used to dimension variable depth and variable height segments. In these cases, provide a table of variable dimensions.
8. Erection blisters or temporary stressing blisters.
9. Half plan of top slab and half plan of bottom slab fully dimensioned.
10. Section View with dimensions.
11. Dimension any openings for electrical, trunk lines, drainage pipe in the bottom slab, vent holes, etc.

B. Deviation Segment Dimension Sheet

In addition to providing the information for the Typical Segment Dimension Sheet described above, provide the following additional information:

1. Deviation segment dimensions.
2. Locate temporary P.T. bar stressing holes.
3. Locate and label tendons.
4. Show external P.T. steel ducts.
5. Locate electrical maintenance lighting pass-thru holes.

C. Expansion Joint Segment Dimension Sheet

In addition to providing the information for the Typical Segment Dimension Sheet described above, provide the following additional information:

1. Dimension expansion joint box thickening and block-out.
2. Dimension diaphragm and diaphragm opening.
3. Anchor protection drip groove.
4. Locate external longitudinal tendon anchors and steel ducts.
5. Locate electrical maintenance lighting pass-thru holes.
6. Locate plinth details and locate centerline of bearing locations.
7. Show transverse tendon geometry and anchors.

D. Pier Segment Dimension Sheet

In addition to providing the information for the Typical Segment Dimension Sheet described above, provide the following additional information:

1. Dimension diaphragm and diaphragm opening.
2. If pier segment is formed using two segment halves, show P.T. bar ducts
3. Locate external longitudinal tendon anchors and steel ducts.
4. Locate electrical maintenance lighting pass-thru holes.
5. Locate plinth details and locate centerline of bearing locations.
6. Show transverse tendon geometry and anchors.

20.4 Superstructure Drawings - Segment Reinforcing Sheets

The Segment Reinforcing Sheets include the following sheets: Typical Segment Reinforcing, Deviation Segment Reinforcing, Expansion Joint Segment Reinforcing, and Pier Segment Reinforcing. Provide the following for the segment reinforcing sheets:

Show reinforcing steel, post tensioning anchors and ducts for all longitudinal and transverse tendons, and P.T. Bars. Verify post tensioning spirals do not conflict with reinforcing, other spirals, drainage, or other PT ducts. Show ducts, PT bar locations and bridge drainage schematically (Top and Bottom Slab). Do not provide dimensions or spacing to ducts. Dimension to ducts to be provided on the bulkhead sheet. Show reinforcing for segmental box, diaphragms, blisters, and/or deviation saddles as required. Provide special bar bends where required. At a minimum, show cross section, plan and elevation view.

Pier Segment and Expansion Joint Segments are highly congested with reinforcing (longitudinal, shear, transverse, and torsion bars), transverse top slab tendons, longitudinal tendons, spirals, PT bars, and looped or transverse diaphragm tendons. Therefore, these segments require integrated drawings. Integrated drawings should be 3D; however, for less congested segments, multiple sections using 2D integrated drawings are acceptable.

Figure 20.4-1 Reinforcing in Deviation Segment

20.5 Superstructure Drawings - Transverse Post-tensioning Details

The Transverse Post-Tensioning Details show the typical transverse post-tensioning for the typical, pier, and expansion/abutment segment. At a minimum, show the following:

A. The cross section of the segment. If special details are required for either the pier segment or abutment segment, show a half elevation of the typical (and other segments) and a half elevation of the segment requiring other post-tensioning.

B. Define the transverse tendon trajectory using distance and offsets to tendon P.I. Also show longitudinal tendon and P.T. Bar ducts.

C. Provide End View of blockout and transverse post-tensioning anchorage.

D. Provide Plan view of anchorage. Show plan view of tendon and local bursting reinforcing.

E. Provide notes including whether the tendon is single or double end stressed and whether the stressing is staggered or partially stressed prior to form release with minimum concrete strengths.

F. Tendon spacing for each type of segment.

20.6 Superstructure Drawings - Bulkhead and Shear Key Details

The Bulkhead and Shear Key Details Sheet(s) outlines the shear keys for the typical segment. These sheets may also apply to the expansion joint and the pier segment. At a minimum, show the following:

A. The cross section of the segment with the location and size of the shear keys. Provide web shear keys and alignment keys in top slab and bottom slab. Typically, one sheet is used for each of the segments required.

B. Locations and labeling of all longitudinal ducts (top slab and bottom slab).

C. Locations of all the post-tensioning anchorages (top slab and bottom slab).

D. Dash-in blister locations for permanent and temporary post-tensioning.

E. Section cuts at each shear key. Provide dimensions of each type of shear key for each of the section cuts.

F. If pier segment is formed using two segment halves, show shear keys at segment diaphragm interface, epoxy bleed drain holes, and P.T. bar ducts used to assemble full pier segment.

G. Blockout details of permanent and temporary PT.

H. Notes on duct dimensions.

20.7 Superstructure Drawings - Longitudinal Post-Tensioning Layout

The Longitudinal Post-Tensioning Layout Sheet(s) show the overall longitudinal post-tensioning layout for each span. The Longitudinal Post Tensioning Layout includes all sheets for the permanent post-tensioning and all sheets for the temporary post-tensioning. At a minimum, show the following:

A. For span-by-span and balanced cantilever construction:

1. Plan View and Elevation View of the post-tensioning. The plan view usually consists of a half plan top slab and a half plan bottom slab. Tendon locations shall match locations on the bulkhead sheet.
2. Show all cantilever and continuity tendons in Plan View with the horizontal deviation. Show all post-tensioning vertical deviations in the Elevation View.
3. For internal cantilever and continuity tendons, show a partial cross section of the top and bottom slab on the Plan View.
4. Label segments, closure joints, and pier locations. Show split pier segments if applicable.
5. Label all post-tensioning tendons. Call out PT bars on the plans as either temporary or permanent.
6. Show all blisters and deviation saddles for bottom slab and top slab tendons and PT bars.

B. Provide a Legend for the sheet. Show "Stressing End", "Dead End", "Internal Tendon", "External Tendon", "PT Bar", etc. on the Legend.

C. For external tendons including future tendons used with horizontally curved bridges, verify that tendons do not conflict with box webs.

20.8 Superstructure Drawings - Post-Tensioning Details (Rev. 01/17)

A. The Post-Tensioning Details Sheet(s) incorporate all of the post-tensioning details to describe the overall geometry of the tendons not otherwise shown on other sheets. The Post-Tensioning Details Sheet(s) show the detailed PC and PT of the tendons, tendon radius/parabolic profile (plan and elevation), and anchorage location for all permanent and temporary strand and bar tendons.

B. Provide clearances at Stressing End Anchorage locations as shown in Figure 20.8-1 and Figure 20.8-2. Provide clearances at Non-stressing End Anchorage locations as shown in Figure 20.8-3 and Figure 20.8-4.

C. Design and detail external tendons at diaphragms, deviators and blisters as shown in Figures 20.8-5, 20.8-6, 20.8-7, 20.8-8, 20.8-9 and 20.8-10. See ***SDG*** 1.11.4 for additional requirements.

Figure 20.8-1 Stressing End Anchorage Clearance of Bottom Internal Tendon Near Deviator

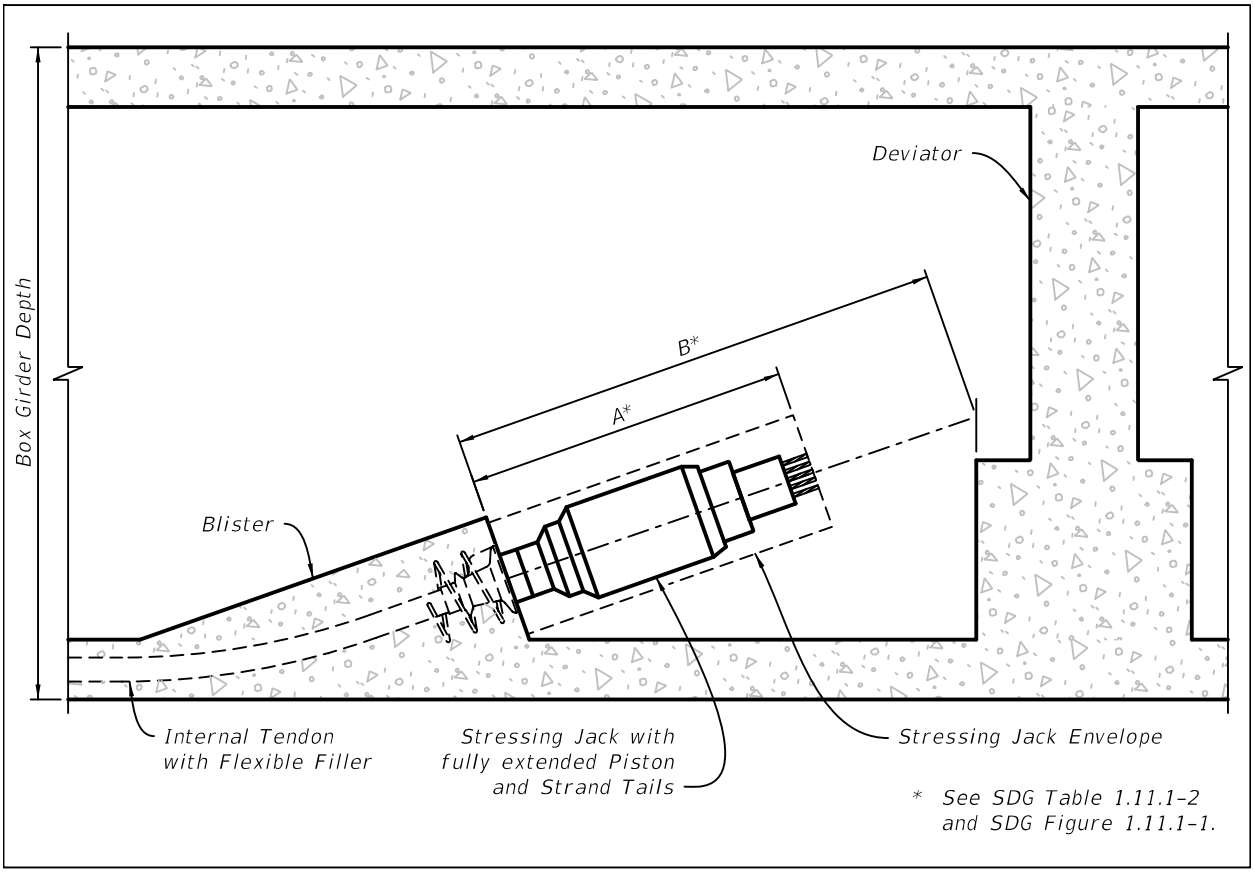

Figure 20.8-2 Stressing End Anchorage Clearance of External Tendon at Diaphragm Near Anchor Block

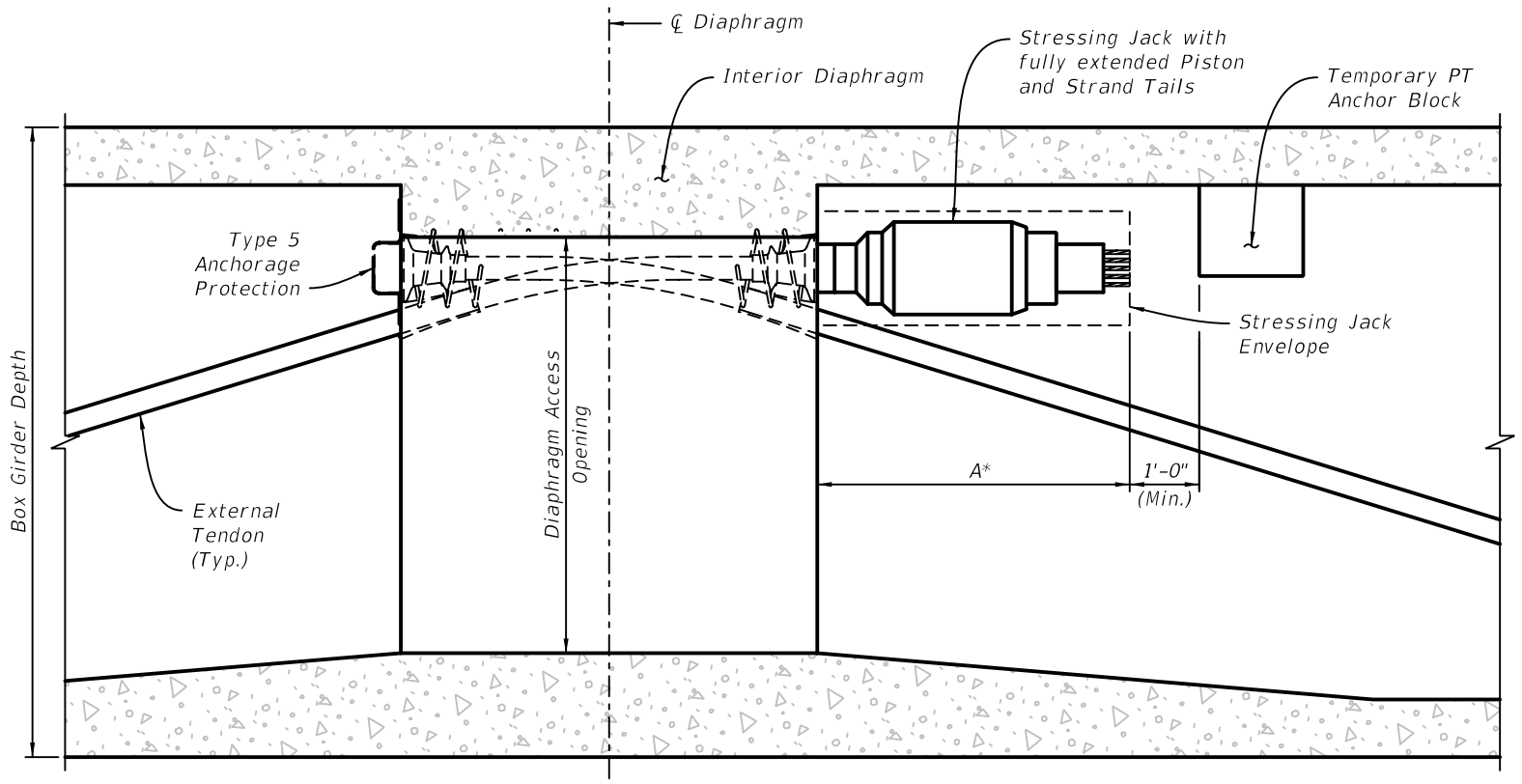

* See SDG Table 1.11.1-2 and SDG Figure 1.11.1-1.

Figure 20.8-3 Non-Stressing End Anchorage Clearance at End Diaphragm Near Abutment Backwall

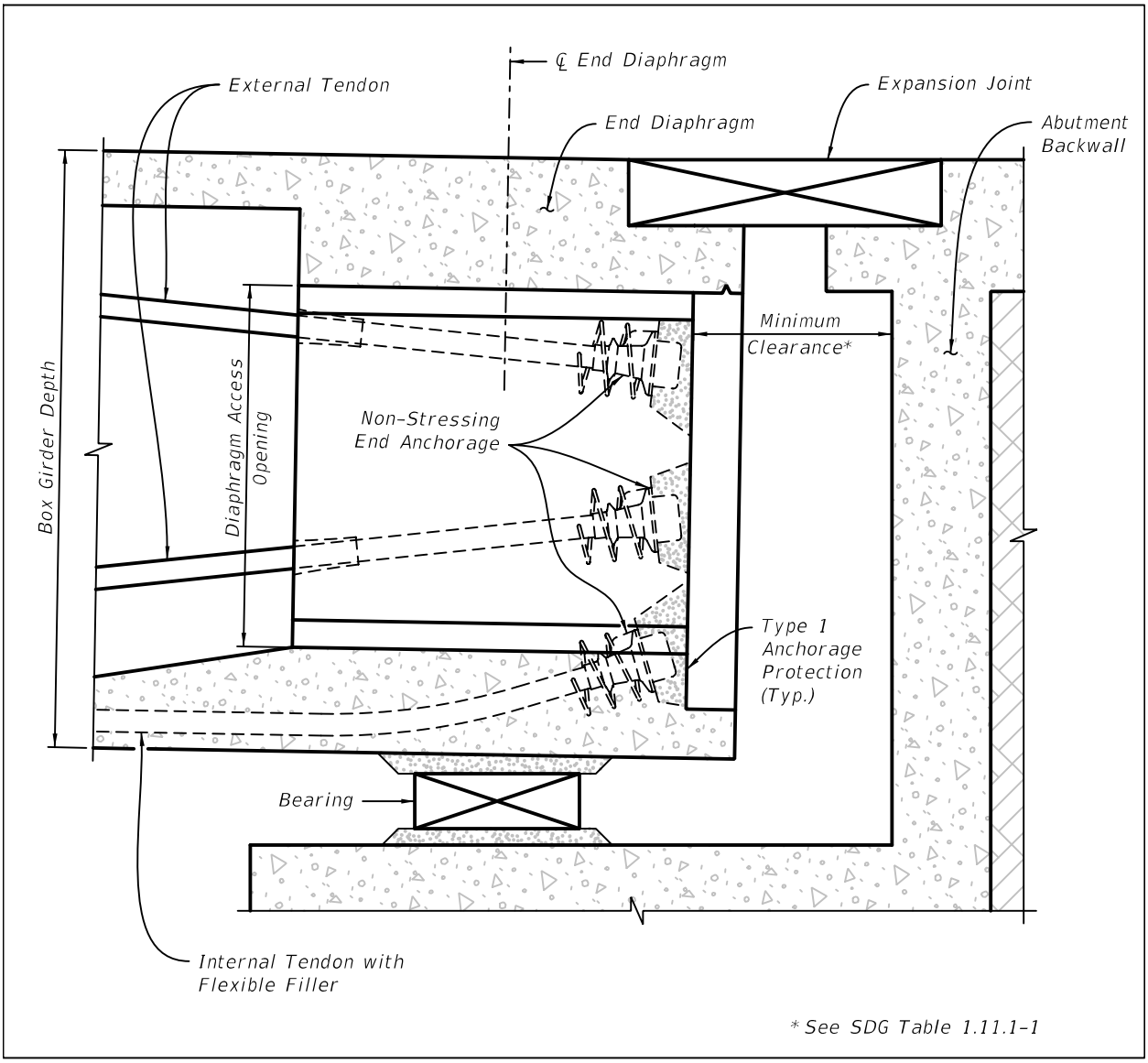

Figure 20.8-4 Non-Stressing End Anchorage Clearance at End Diaphragm Near Other Structure

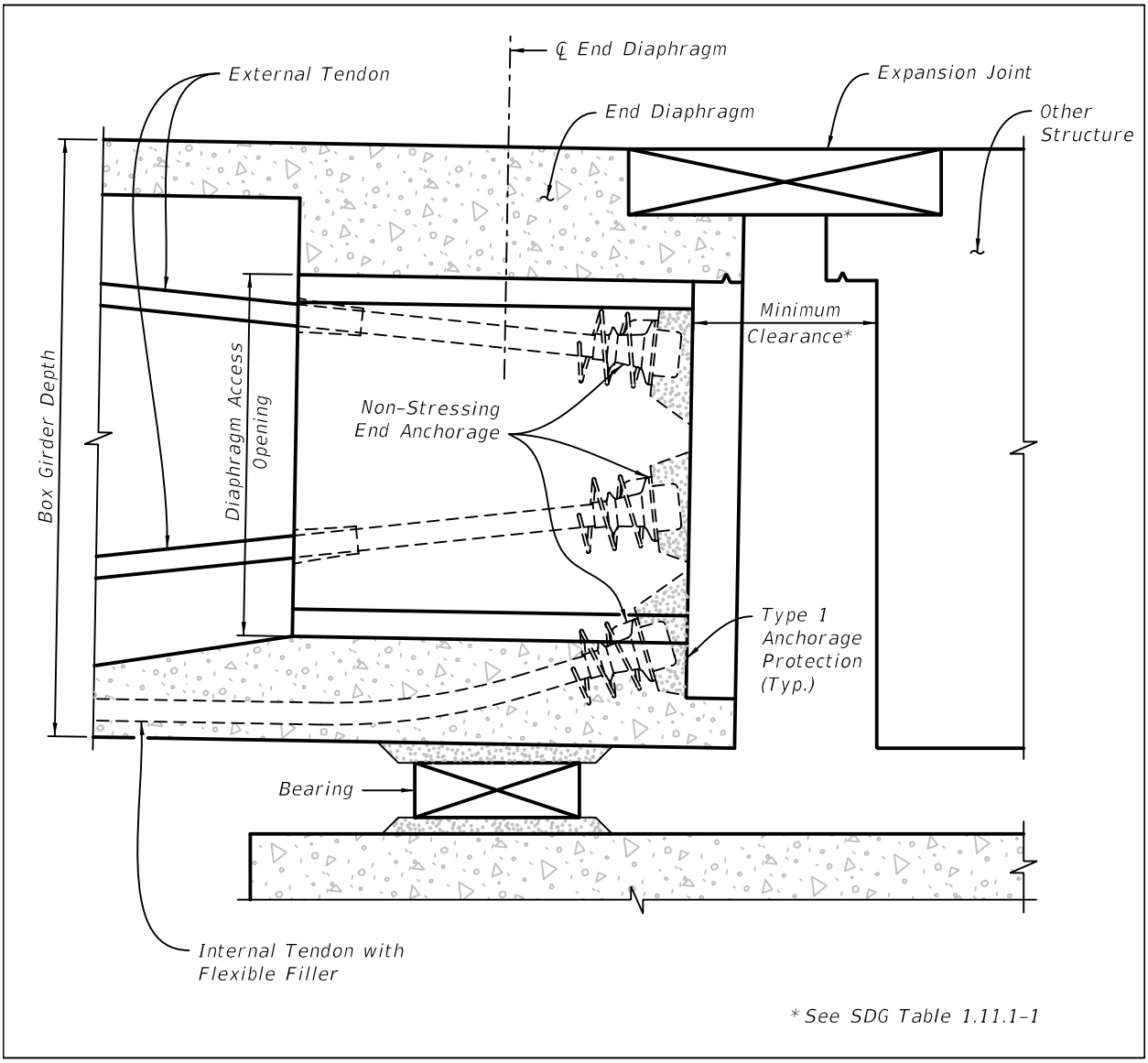

Figure 20.8-5 Detail at Pier Segment with Tendon Anchorage

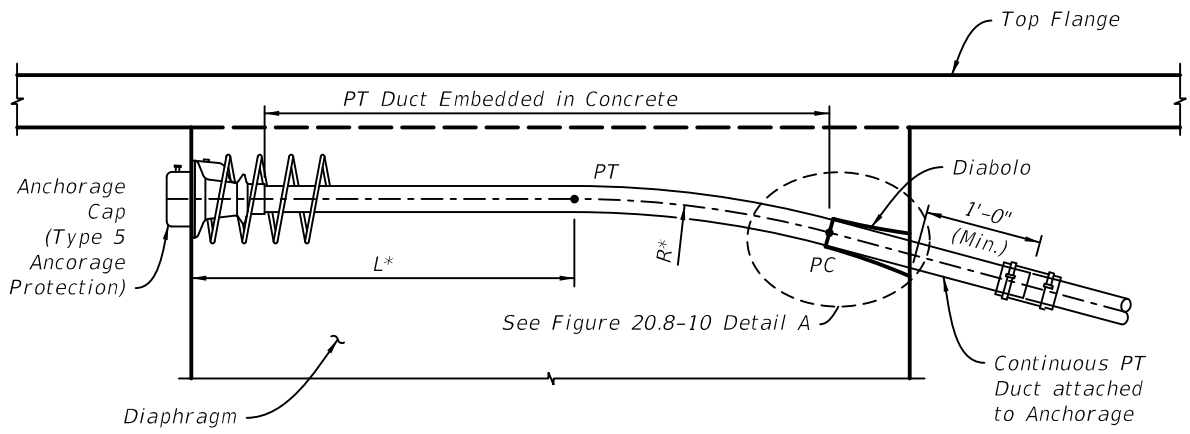

* See SDG Table 1.11.4-2 for L (Min.) and R (Min.)

Figure 20.8-6 Detail at Expansion Joint Segment with Tendon Anchorage

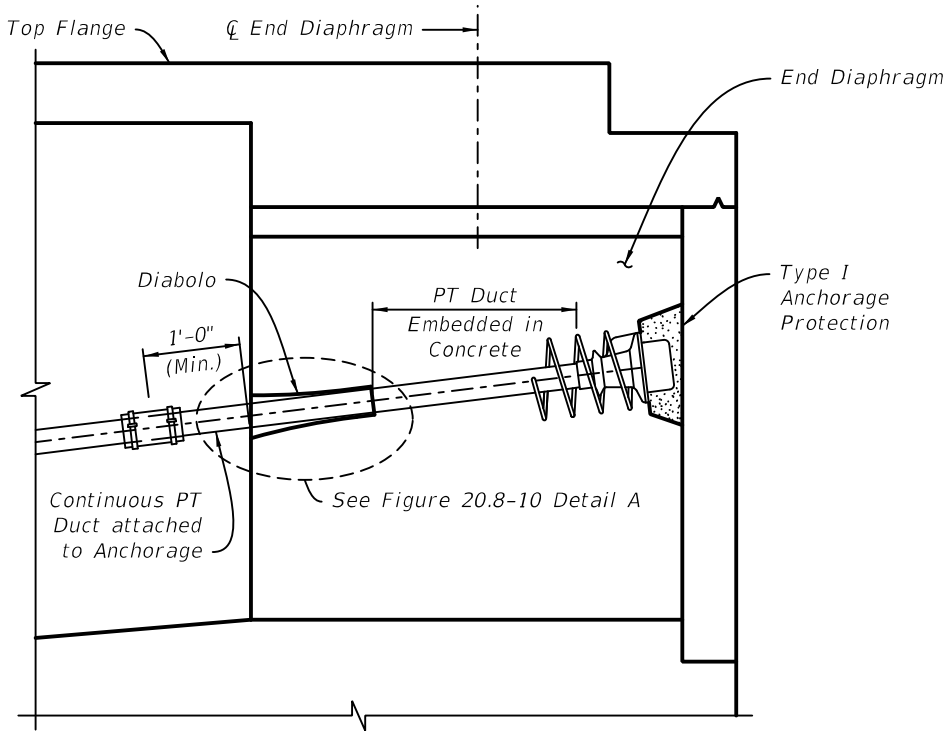

Figure 20.8-7 Detail at Blister without Anchorage

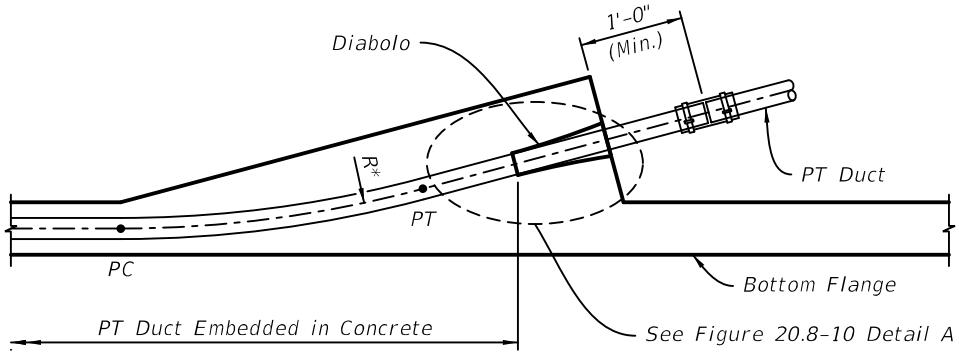

* See SDG Table 1.11.4-2 for R (Min.)

Figure 20.8-8 Detail at Pier Segment with Tendon Saddle

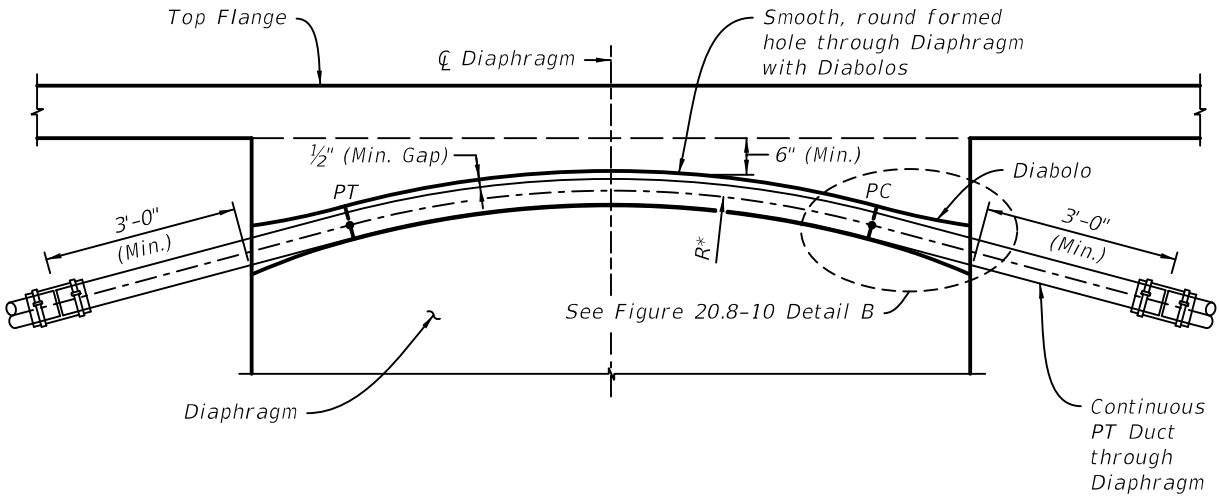

* See SDG Table 1.11.4-2 for R (Min.)

Figure 20.8-9 Detail at Deviator

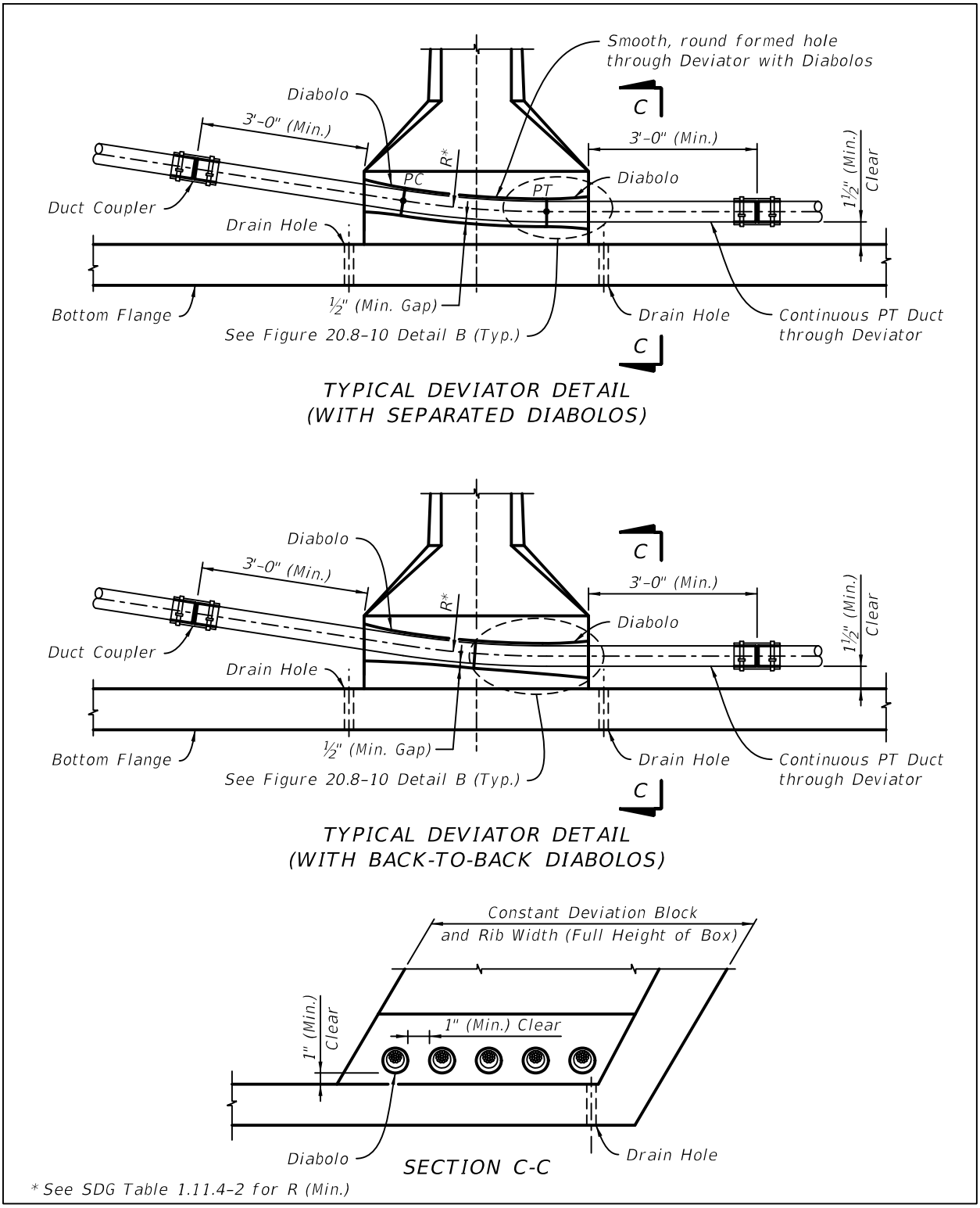

Figure 20.8-10 Diabolo Details

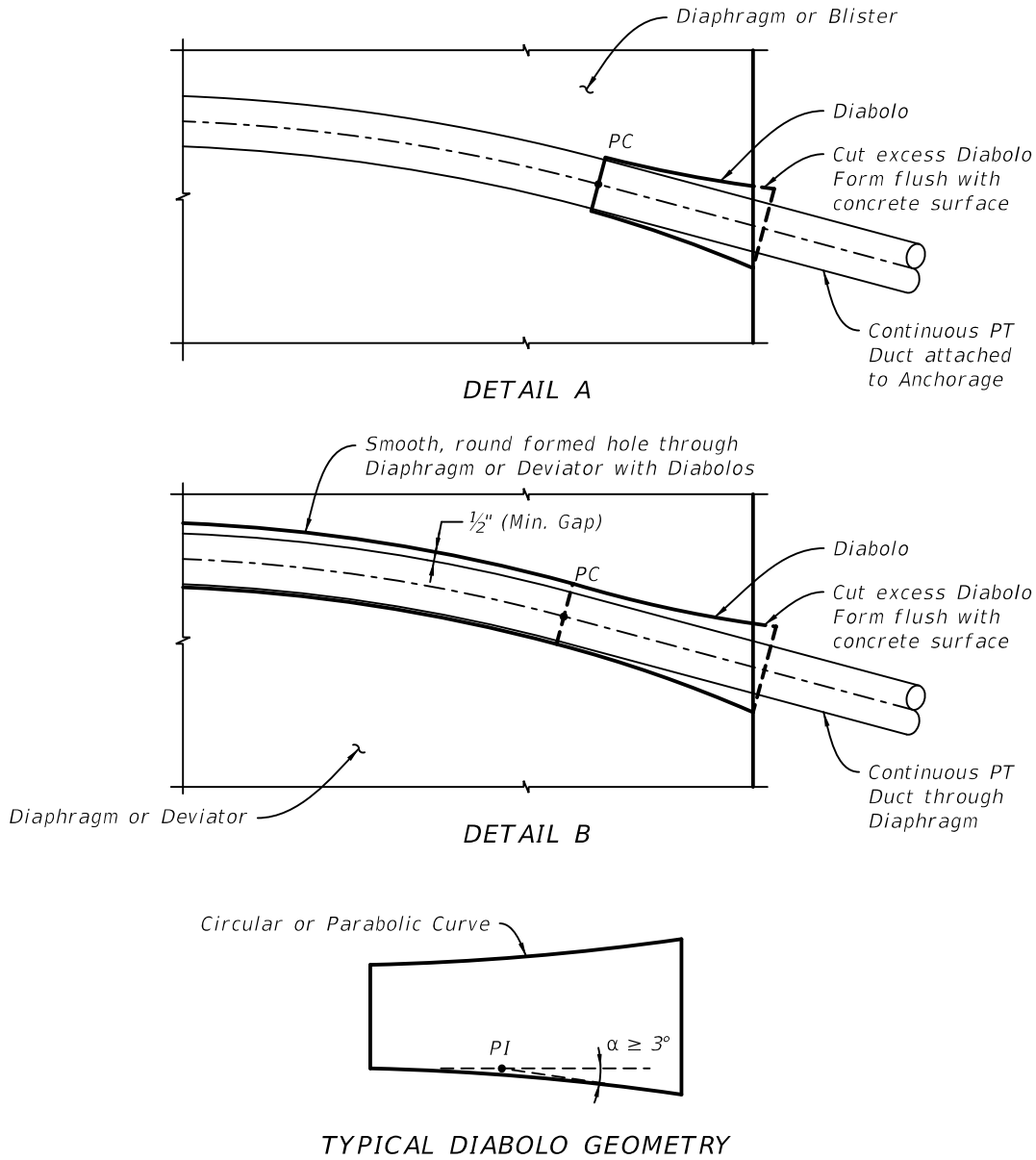

20.9 Superstructure Drawings - Erection Scheme and Construction Notes

The Erection Scheme and Construction Notes Sheet(s) show one detailed method for the construction of the bridge, giving consideration to site constraints, construction equipment reach and mobility, MOT, etc. The sheet(s) typically shows an elevation view of the step-by-step construction using trusses, cranes, segment lifter, temporary supports, etc. and construction notes for each phase. General erection schemes and sheet requirements are shown below for balanced cantilever and span-by-span erection:

20.9.1 Balanced Cantilever

A. General Balanced Cantilever Erection Procedure for Precast Segments

1. Set pier segment or pier segment halves onto pier top and stabilize with shim packs, jacks, vertical P.T. bars or other means. Stress segment halves together. Ensure there is adequate room to place jacks, etc. on the top of the pier.
2. Install temporary towers.
3. Erect and stress one segment on either side of pier. Segments can either be erected on each side of the pier simultaneously or on one side of the pier and then the other side. Support erected segments vertically on top of temporary towers.
4. Set the geometry after the first two segments have been erected (pier segment plus the one segment on each side of pier segment) by jacking vertically and horizontally as necessary. Provide temporary horizontal jacking brackets to facilitate the alignment work. Provide temporary longitudinal fixity of permanent bearings.
5. After the geometry has been set, grout permanent bearings.
6. When grout has reached strength, transfer vertical pier segment reaction on to permanent bearings by removing the shim packs.
7. Continue the erection of cantilever segments. Install segments first with PT Bars that are continuously coupled, then stress permanent post tensioning strands. The PT bars are used to hang the segments from the cantilever tip and to squeeze epoxy at the joint. Permanent internal PT Bars for balanced cantilever construction may be stressed up to 70% of the ultimate tensile strength. Alternate sides of the cantilever in order to keep out-off-balance forces in the cantilever to a minimum.

Figure 20.9.1-1 Means of Stabilizing Cantilever

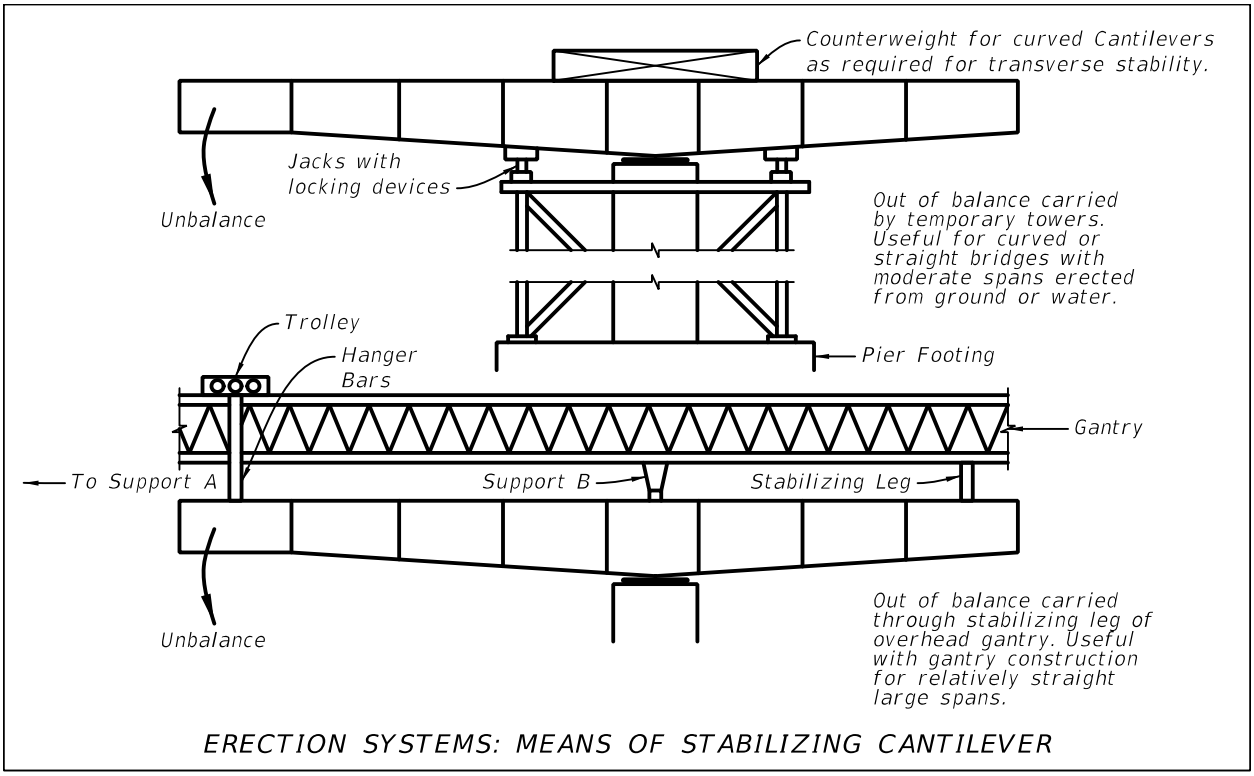

Figure 20.9.1-2 Stabilization of Balanced Cantilever

8. Cast closure and stress continuity tendons after either:
   a. Two adjacent cantilevers have been constructed or
   b. One cantilever has been constructed and the back-span on falsework has been constructed.
9. Release the temporary towers. Release the temporary longitudinal bearing restraints for each cantilever as continuity is made to adjacent spans provided that a longitudinal restraint is maintained somewhere along the unfinished unit as well as each cantilever prior to closure.
10. In general, construct balanced cantilever bridges in the following two directions:
    a. From abutment to abutment while making spans continuous as construction progresses or
    b. From each end abutment towards the center with final closure in the center span as construction progresses.
11. For balanced cantilever bridges with cast-in-place pier segments, closure pours are required between the pier segment and the first segment. Set the geometry of the pier segment, hang the first segment on either side of the pier segment with strongbacks and PT bars, and set the geometry of the segment before the first closure pour is made between the segment and pier segment. Stress PT and continue erection as described above.

Figure 20.9.1-3 Setting Geometry with Strongbacks

B. Cantilever Stability During Construction

1. Stability of the cantilever can be accomplished by three different methods.
   a. Temporary towers. Temporary towers are used to provide stability and can either be provided on one side of the cantilever or wrapped around the column. When towers are provided on one side only, provide the out of balance weight of the cantilever on the tower side.
   b. Overhead gantry. An overhead gantry spanning from the cantilever pier segment to the previously placed cantilever with leg connection along the cantilever such that it provides stability to the cantilever during construction.
   c. Integral pier table and column. The pier column itself can provide stability when the pier segments are cast-in-place as part of the column. Due to the rigidity of the frame action, strong backs are used at the mid-span closure pours to control geometry. See ***SDG*** for design requirements associated with designing the superstructure and column for the worst case cantilever erection tolerances.
2. Temporary towers are typically founded on the top of the permanent pile/shaft footing. The temporary out-of-balance loads can control the design of the piles/ shafts and footing, therefore it is important for the assumed equipment loads and construction loads to be shown in the plans as part of the erection notes.
3. Temporary towers are intended to transmit the out-of-balance moments from the cantilever to the pier footing. The temporary towers are not intended to carry the vertical weight of the cantilever; the weight of the cantilever is to be taken by the pier column through bearings or shims.
4. Show required counterweights and tie downs in the plans necessary to maintain stability of curved cantilevers. Show locations of counterweights and tie downs and provide assumed weights and forces and sequence of placement and removal.
5. Verify the temporary bearings/shims can be placed on the top of pier to stabilize the pier segment. Verify adequate space for grouting the bearings. Show external brackets where necessary.
6. Depict the assumed method for stabilizing the cantilevers during balanced cantilever construction on the plans.

C. Assumed Construction Methods. The methods below can be used for the construction of balanced cantilever structures. Clearly depict the assumed methods for cantilever construction on the plans. In some cases, more than one construction method may be necessary for a given project due to crane access limitations or traffic control restrictions. Show the magnitude and location of the assumed reactions for erection equipment onto the structure.

1. Overhead Gantry
2. Segment lifter
3. Beam and winch
4. Crane
5. Form traveler

Figure 20.9.1-4 Gantry and Stabilization Towers

Figure 20.9.1-5 Gantry with Leg on Pier Segment

D. Erection Drawings - Show the following in the erection drawings:
   1. Assumed method of erection (e.g., crane, overhead gantry, etc.)
   2. If erection is by overhead gantry
      a. Show overhead gantry on plans.
      b. Provide assumed length and weight (unloaded). Verify weight of gantry is compatible with required strength and lifting capacity of gantry. See Figure 20.9.1-6
      c. Provide assumed vertical and longitudinal thrust loads during segment erection and during launching. Provide critical loading from gantry to the substructure. Account for bridge grade and add an additional 1% grade when computing thrust loads to account for gantry flexibility and friction forces.
      d. Provide special construction notes for gantry.
         i. If gantry leg requires touchdown within a span during launching, show assumed steps and distances of the gantry moves. Verify capacity of superstructure for this temporary gantry loading. Show assumed reaction magnitudes and locations in the plans.
         ii. Specify whether design assumes gantry loading is over the pier segments during segment erection.
         iii. Include notes associated with stabilizing pier segment to the top of the pier. Ensure that the plan dimensions of the pier cap for temporary shims or vertical PT are sufficient to stabilize the pier segment. Show external brackets where necessary.

Figure 20.9.1-6 Gantry Loads During Launching

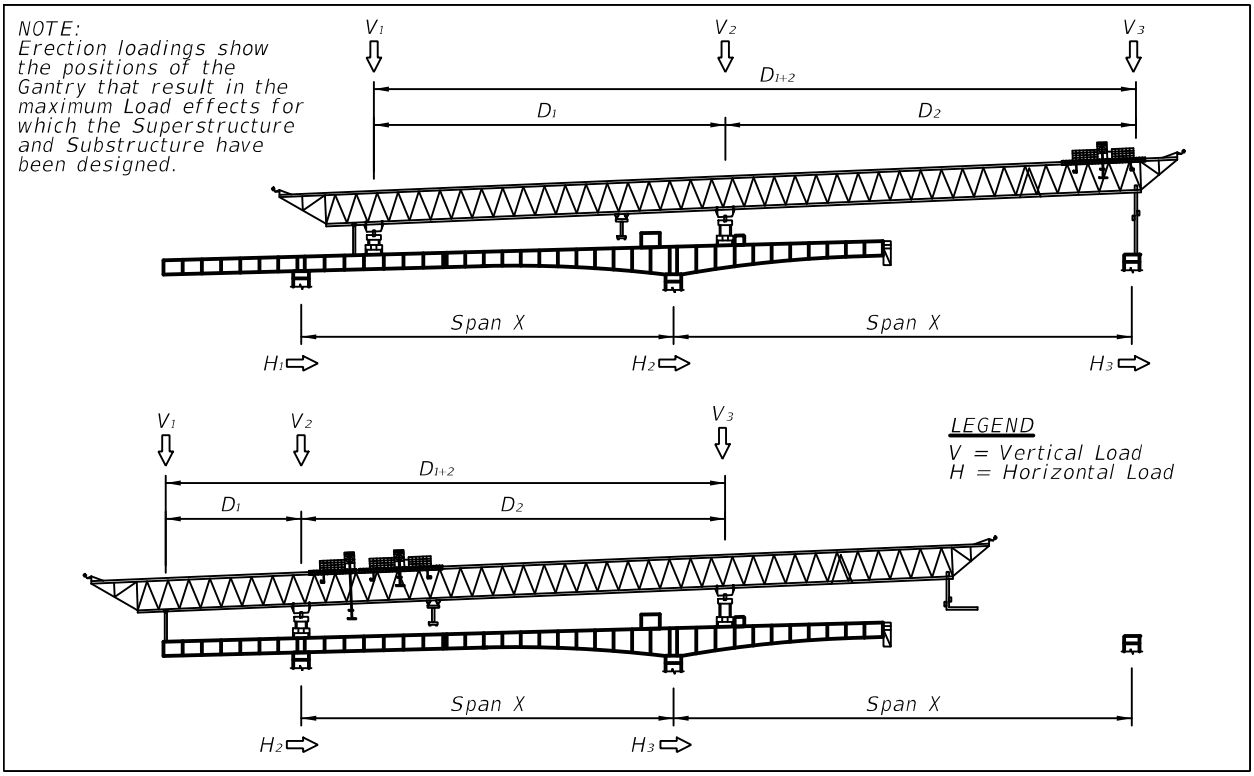

3. If erection is by segment lifter or by beam and winch:
   a. Show sketch of segment lifter/beam and winch. Provide magnitude and location of assumed reactions on the superstructure.
   b. Show assumed PT bar tie-down location. Verify capacity of top slab at tie down location.

Figure 20.9.1-7 Beam and Winch Details

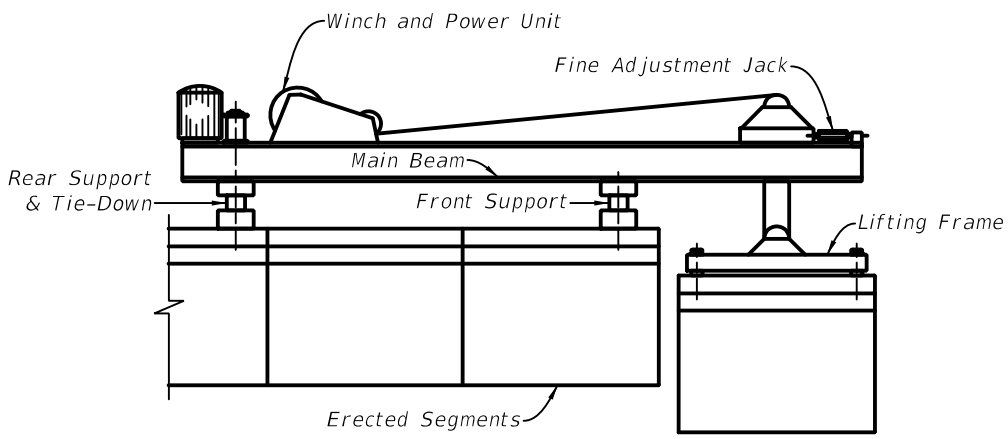

BEAM AND WINCH DETAILS

4. If erection is by crane: Show a sketch in the plans depicting land/barge based cranes. Perform a crane access assessment during design. Include crane placement for all segment lifts for the project in the assessment. Assessment shall include:
   a. Assumed crane size (tonnage), assumed boom length, etc.
   b. Working radius of the crane and ensure that all segments can be erected by assumed crane size. Verify clearances between wings and boom.
      i. Ensure that crane placements, durations of lifts, and resulting traffic impacts are acceptable.
      ii. Account for railroad 1.5 factor lifting restrictions as required.
   c. In general, do not place cranes on top of or immediately next to MSE walls. Coordinate any required temporary construction easements during design. Submit a copy of the crane access assessment to the Department for review.
   d. Depict in the plans when:
      i. Cranes have to be placed onto existing bridges where strengthening is required. In this case assumed crane size and strengthening measure need to be clear for bid purposes.
      ii. Special access platforms required due to unusually weak subsurface conditions, or sloping ground surfaces.

iii. Instances where unusually large cranes are required. In this case show:
   - Assumed crane size (tonnage), assumed boom length, etc.
   - Working radius of the crane and ensure that all segments can be erected by assumed crane size. Verify clearances between wings and boom.

iv. Ensure that Traffic Control Plans restrictions are consistent with assumed placement and duration made during design.

5. If erection is by form travelers: Approximate form travelers weight for the cast-in-place cantilever construction. Form traveler weight will vary depending on the size of the segment and span. Assume a minimum form traveler weight of 160-180 kips for single cell box and 280-300 kips for twin cell box. Show assumed traveler reaction magnitudes and locations in the plans.
6. Erection notes: Examples of erection notes include the following:
   a. At all non-fixed bearing cantilever locations provide temporary longitudinal restraints. Temporary longitudinal restraint shall remain in place until cantilever is closed with adjacent cantilevers which are longitudinally restrained.
   b. All temporary towers adjacent to vehicular traffic must be protected by traffic barriers.
   c. All temporary towers supporting free cantilevers over traveling public shall be designed by the Contractor with signed and sealed calculations including field certification by a professional engineer registered in State of Florida prior to allowing traffic to proceed underneath.
   d. The erection sequence considered in the design and shown herein anticipates cantilever erection using ground level cranes and does not load the superstructure cantilevers.

20.9.2 Span by Span Erection

A. General Span by Span erection for precast segments.
   1. Secure and align the truss.
   2. Place pier segments and stabilize with shim packs, jacks, PT bars or other means.
   3. Erect segments in a span.
   4. Apply epoxy between typical segments and stress together using temporary external PT bars. Internal bars may also be used. Limit the force in the external PT Bar to 50% of the Guaranteed Ultimate Tensile Strength (GUTS) for re-used bars.
   5. Repeat the process until all of typical segments in the span are erected and stressed.
   6. Place concrete blocks in the gap between pier segments and the typical segments. Partial stress tendons to approximately 10% GUTS.
   7. Provide cast-in-place closure joints between the pier segments and the typical segments.
   8. Place and stress tendons.

9. Check alignment and grout bearings.
10. Remove shim packs.

Figure 20.9.2-1 Span by Span Construction

B. Stability of Pier Segments During Construction. Set pier segment onto pier top and stabilize with shim packs, jacks, vertical PT bars or other means. Show locations of temporary bearings/shims. Verify space for the temporary bearings/shims on top of pier. Show external brackets where necessary.

C. Assumed Construction Methods. The methods below can be used for span by span construction. Assumed methods for cantilever construction shall be clearly depicted on the plans.

1. Under slung truss
2. Overhead Gantry
3. Top-down Construction using crane.

D. Erection Drawings - Show the following in the erection drawings:

1. Assumed method of erection (e.g., underslung truss, overhead gantry, etc.)
2. If erection is by overhead gantry:
   a. Show overhead gantry on plans.
   b. Provide assumed weight (unloaded). Verify weight of gantry is compatible with required strength, lifting capacity and deflection characteristics of gantry.

c. Show assumed longitudinal thrust loads during segment placement and launching. Provide critical loading from gantry to the substructure. Account for bridge grade and add an additional 1% grade when computing thrust loads to account for gantry flexibility and friction forces.

d. Show longitudinal thrust loads during segment erection. This assumes all segments are hung from the gantry which will be supported by the Pier segments. Design piers for gantry thrust loads during erection

e. Provide special construction notes for gantry.

   i. If gantry leg requires touchdown within a span, show assumed steps and distances of the gantry moves. Verify capacity of superstructure for this temporary gantry loading. Show assumed reaction magnitudes and locations in the plans.

   ii. Whether design assumes gantry loading is over the pier segments only.

   iii. Include notes associated with stabilizing pier segment to the top of the pier. Ensure that the plan size of the pier cap is sufficient to stabilize the pier segment with temporary shims or vertical PT. Show external brackets where necessary.

3. If erection utilizes underslung truss, provide the following:

   a. Show assumed underslung truss vertical and longitudinal loading on the structure on the Erection Drawings.

   b. Provide assumed weight (unloaded). Verify weight of truss is compatible with required strength, lifting capacity and deflection characteristics of truss.

   c. Design piers, foundations, bearings, etc. for all vertical and longitudinal loading during launching of the gantry or underslung truss.

   d. Provide sketch of temporary assumed bracing for underslung truss and attachment to either the pier or to the footing. Ensure footing is sized adequately to support temporary works or provide notes in drawings that additional temporary foundations are required for construction loading and provide assumed load.

   e. Verify temporary clearance envelopes between truss system and lower roadway.

Figure 20.9.2-2 Underslung Truss Details

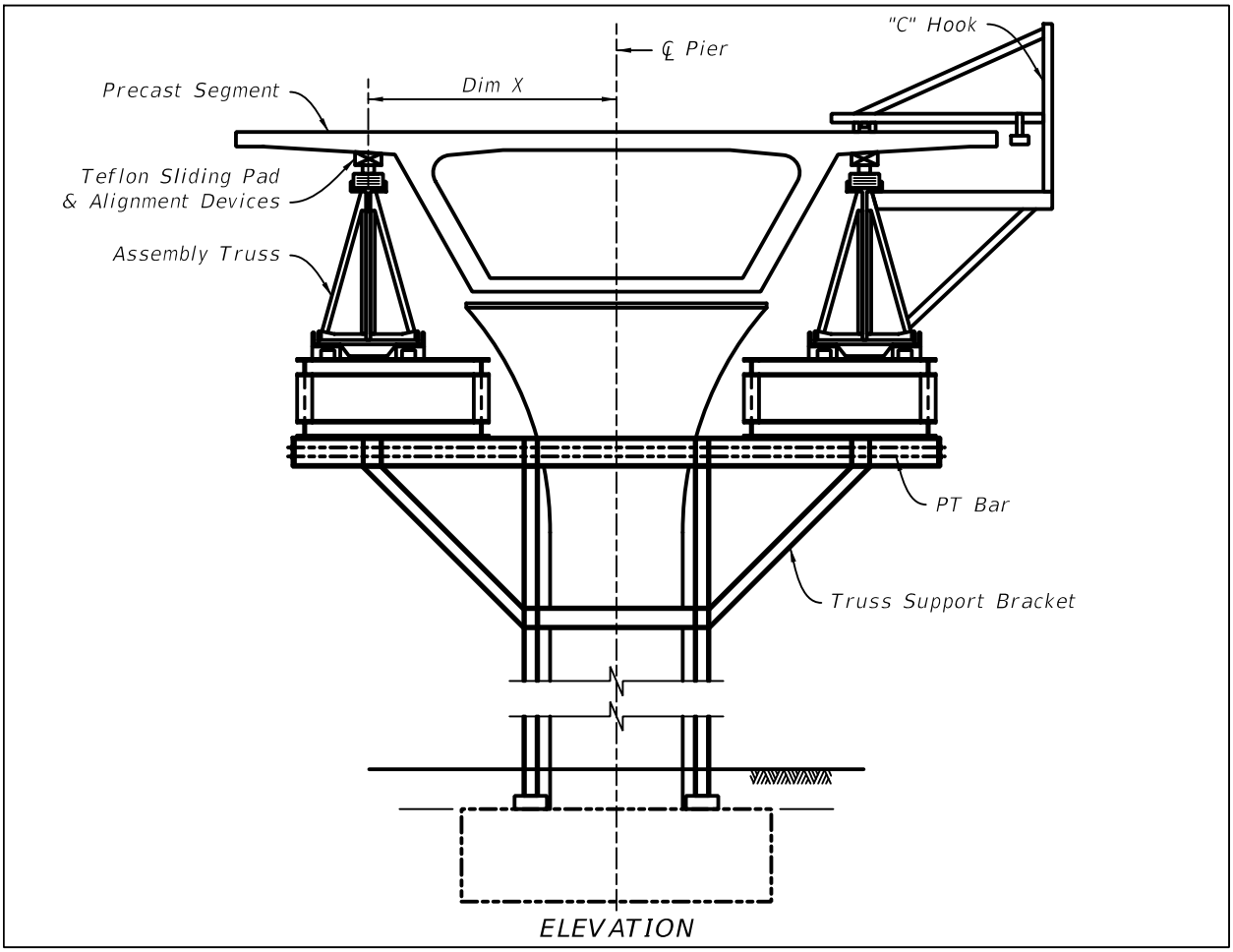

4. If erection utilizes top-down construction, where the segments are to be delivered by truck over previously erected spans to a crane, provide sketches showing the following:

   a. Sketch of the assumed erection crane in elevation view. Show width of outriggers extended and retracted. Show the magnitude and location of the assumed maximum crane reactions. Verify capacity of superstructure for this temporary load case.

   b. Sketch of the crane with the segment hauler in partial plan view. Show location of crane placing segments, location of the segment hauler, working radius of the boom, centroid of the outriggers, and any required longitudinal beams to support crane reactions.

Figure 20.9.2-3 Span by Span Top-Down Erection Details

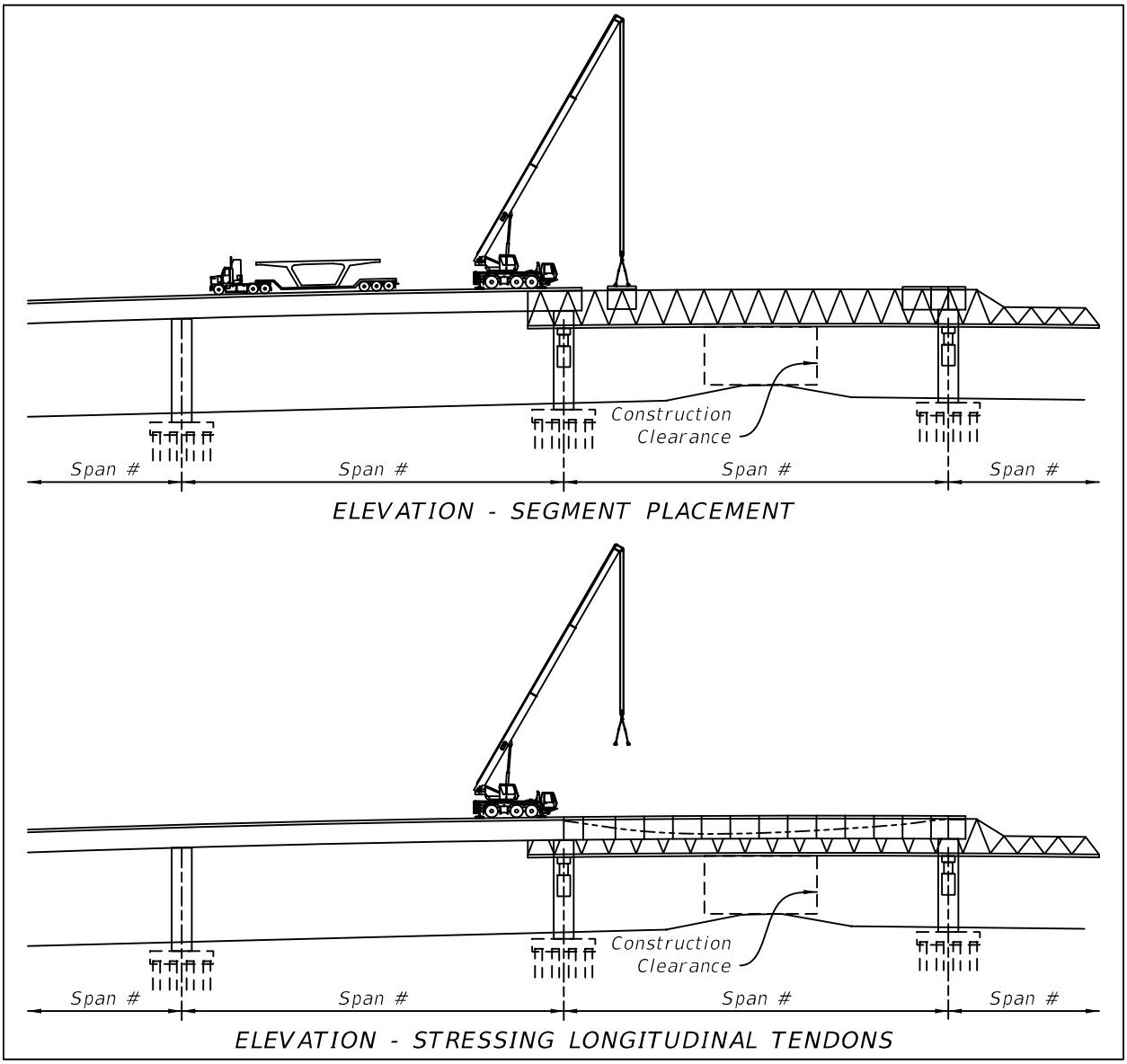

c. Verify punching shear in the deck from crane outriggers and provide/show longitudinal beams/crane mats as required.

d. Sketch of the assumed segment hauler. Include axle loads and axle spacing for empty weight of the hauler, weight of segment, and total assumed weight. Verify capacity of superstructure for this temporary load case.

Figure 20.9.2-4 Project Specific Truck and Axle Weight for Segment Transport

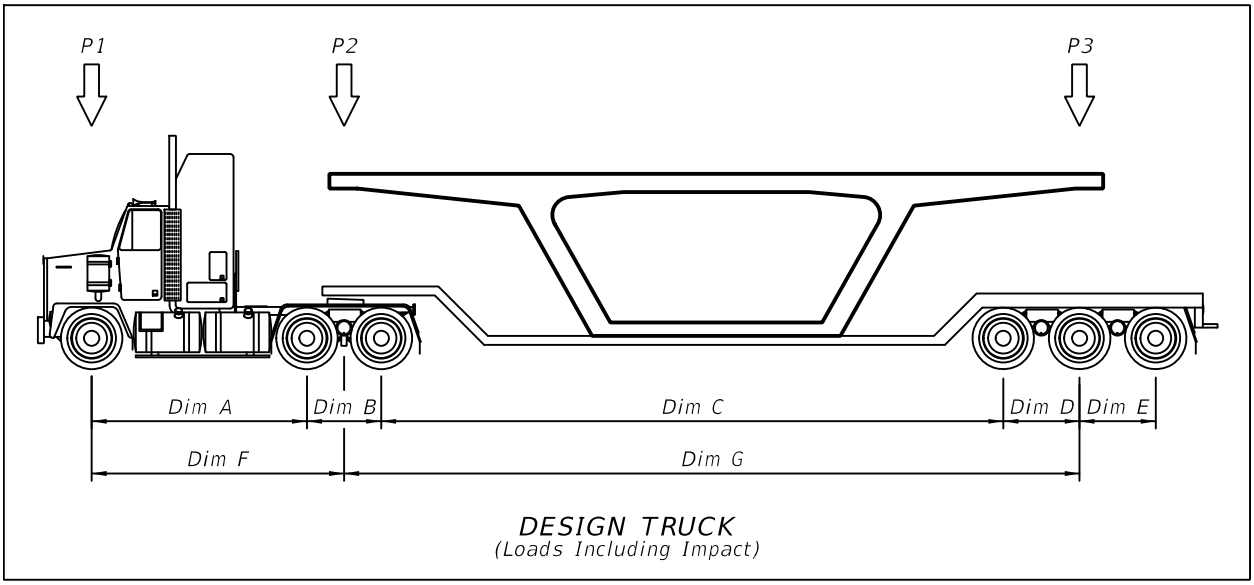

Figure 20.9.2-5 Truck Loaded with Segment

21 MOVABLE BRIDGES

21.1 Bascule Leaf Notes

21.1.1 General

A. As the first item under General, list the version of the AASHTO Specification, any interim(s), version of Structures Manual and subsequent Structures Design Bulletins used as the basis for the design of the plans.

B. Organize notes under headings for Design, Materials, Construction, etc.

C. Include all General Notes and Pay Item Notes specific to Bascule Leaf on the Bascule Leaf General Notes sheet.

Modification for Non-Conventional Projects:
Delete ***SDM*** 21.1.1.C and insert the following: C. Include all General Notes specific to Bascule Leaf on the Bascule Leaf General Notes sheet.

D. Do not use General Notes or any other plan notes to repeat or modify requirements stated in the Specifications. If project specific modifications to the Specifications are required, prepare either a Modified Special Provision or a Technical Special Provision. Contact the District Specifications Office for guidance.

E. Never include proprietary information in a General Note or any other plan notes unless system compatibility is an issue and a signed Public Interest Finding (per FHWA requirements) is on file in the District Specifications Office. Do not specify a product or manufacturer name as this may give preferential treatment to the listed items. Do not use the term "or equal". Use performance criteria. Contact the District Specifications Office for guidance.

Modification for Non-Conventional Projects:
Delete ***SDM*** 21.1.1.E.

21.1.2 Bascule Leaf Notes

The following is a sample of Bascule Leaf notes to be included on the Bascule Leaf Notes sheet. Place these notes on the Bascule Leaf Notes sheet and modify for project-specific requirements. Text in Italics is notes to the designer. At a minimum, show the following information:

Design:

A. General:

1. Design of the Bascule Leaf Structure is in accordance with the American Association of State Highway and Transportation Officials (AASHTO) LRFD

Bridge Design (YEAR) and interims through XXXX, FDOT Structures Design Guidelines (SDG) LRFD (YEAR) and the AASHTO LRFD Movable Highway Bridge Design Specifications (AASHTO Movable), XXX, and interims through XXX.

2. Dead Load Force Diagrams and Shear and Bending Moment Influence Lines for the Main Girders are provided in these Plans for use in future Load Rating and Overload Permitting. These diagrams are based on the assumptions stated herein.
3. See General Notes for additional information and requirements.

B. Design Loadings:

1. DEAD LOADS (For Structural Design and Balance Calculations):

Unit Weights (* = Use Actual Design values)	
Concrete (Lightweight for Exodermic Deck, Haunches, Edge Beams, Curbs and Bridge Railing)	XXX pcf *
Concrete (Counterweight)	XXX pcf *
Steel	490 pcf
Aluminum	175 pcf
Deck Panels	XX.X psf *
Traffic Railing (Including Concrete and Steel)	XXX plf *
Pedestrian Railing (Excluding Concrete Curb)	XXX plf *
Future Wearing Surface	No allowance provided
Equipment	(Actual Estimated Weights)
Roadway Lighting Fixtures	(Actual Estimated Weights)

2. LIVE LOADS:
   a. HL93 (Designed for up to X concurrent Lanes)
   b. Sidewalk Live Load per AASHTO
   c. Impact per AASHTO and AASHTO Movable
   d. Distribution of Live Loads to the Main Girder is conservatively taken as follows:
      D.F. = X.X Lanes (From Center Lock to Forward Joint)
      D.F. = X.XX Lanes (From forward Joint to Rear Joint)
3. WIND LOADS:
   a. Per AASHTO and AASHTO Movable modified in accordance with the FDOT Structures Design Guidelines. (Verify with the US Coast Guard the wind speed at which the bridge is locked down.)

b. For Roadway Lighting Fixtures the following Loads shall be assumed to be applied to the Bascule Leaf at the Base of the Fixture:

Longitudinal Moment	X.X kip*ft
Transverse Moment	X.X kip*ft
Longitudinal Shear	X.X kips
Transverse Shear	X.X kips
Torsion	X.X kip*ft

4. TEMPERATURE EFFECTS:

Seasonal Variation: Mean Temperature	70° F
Temperature Rise	40° F
Temperature Fall	40° F
Thermal Coefficient Steel	0.0000065/°F
Thermal Coefficient Concrete	0.000006/°F

5. LOADING COMBINATIONS:

   Per AASHTO, AASHTO Movable and SDG

6. PERMIT LOADING:

   Evaluated for X lanes of traffic for design inventory and FL120 permit loading assuming span locks are engaged (driven) to transmit Live Load to opposite leaf. In addition, evaluate for strength I design operating rating assuming the span locks are not engaged to transmit Live Load to the opposite Leaf.

7. FATIGUE:

   The number of cycles of maximum stress range to be used for Design was determined using X Lane Uni/Bidirectional Traffic on Each Bridge.

   AADT (Year) = XX,XXX (Unidirectional, X Lanes)

   T (Percentage of Trucks) = X.X

   Annual Traffic Growth Rate (Assumed) = X.X%

   Live Load D.F. = X.X Truck

   Single Lane Factor = X.XX

C. Design Assumptions:

1. CACULATION OF SECTION PROPERTIES:

   a. Indicate if the deck was considered composite in the design and under what loads (Dead Load, Superimposed D.L. & L.L., etc.).

   b. Indicate if composite section properties were used for estimating deflections/ camber and strength/service limit state capacities.

2. DEFLECTION LIMITS:
   a. Per AASHTO with the following clarifications:
      i. Live Load deflection of the Bascule Leaf Main girders shall be limited to L/375 where:

         L = Distance from CL Span to CL Live Load Shoe
      ii. Live Loads shall be considered equally distributed to both Main Girders
      iii. Both Center Locks were not engaged.
      iv. Only X Traffic Lanes Loaded on the Leaf for Live Load Deflection Calculations.
3. MEMBER CONNECTIONS:

   The connection of the Floor Beams and the counterweight box to the Main Girders was considered moment resisting connection.
4. MATERIALS:
   a. CONCRETE:
      i. Concrete for the Bascule Leaves shall be in accordance with Section 346 of the Specifications. The following concrete shall be used: (Use actual design Strength and Concrete properties)

Location	Class	f'c	Ec	Unit Weight[1]
Exodermic Bridge Deck (Sand Lightweight Structural Concrete)[2]	IV	5.5 ksi	3020 ksi	115 pcf ± 3 pcf
Counterweight (Main box Girders and Counterweight Tubs)	II	3.4 ksi	3020 ksi	145 pcf ± 1.5 pcf

1 Strict control on the unit weight is required for Span balance considerations. See Section 465 of the Specifications for unit weight testing requirements.

2 Concrete Unit Weight shall be achieved utilizing a lightweight aggregate. The unit weight of sand lightweight structural concrete is critical to the balancing of the movable span. Deviations beyond the tolerances shown will not be permitted and may require removal/replacement at no additional cost to the Department.

f'c Denotes minimum 28-day compression strength

Ec Denotes Modulus of Elasticity at 28 days with specified unit weight.

      ii. See the General Notes and Specifications for other detailed material requirements.

D. Construction:
1. SPAN BALANCE:
   a. Balance of the Bascule Leaves in the close position shall be the following parameters: (Use actual design values)
      i. WL COS α = 340k*ft + 51 k*ft, -0 k*ft (Towards the leaf tip)

ii. Alpha = 20 Degrees to 50 Degrees

iii. Where WL COS α Denotes span unbalance moment (i.e., W*L COS α)

iv. W Denotes the total leaf weight

v. L Denotes the distance from CL Trunnion to C. G. of Leaf.

vi. Alpha Denotes the angle of inclination of the center of gravity above a horizontal line through the trunnion when the lead is closed. (in Degrees).

b. Contractor is responsible for determining the final adjustments to the counterweight to achieve the proper balance of the leaves. See Technical Special Provisions for detailed span balance requirements, submittals and permissible methods for adjusting the counterweight center of gravity location.

c. Bascule Leaf Fabrication, Erection and Alignment: See the Technical special provisions for detailed requirements. Design and Construction of Temporary restraints required during field erection of the Bascule Leaf shall be in accordance with Article 7-11 (Preservation of Property), Division I, General Requirements and Covenants, of the Specifications. The restraints shall be designed to resist loads per AASHTO Movable Specifications, treating the span as "Normally left in the closed position".

2. EXODERMIC BRIDGE DECK:

See the Technical Special Provisions for detailed requirements (Use actual design values)

Live Load Shoe Reaction Summary (kip)	
Loads	Span Closed (0°)
Dead[1]	10
Live[2]	1212
Impact	265
Note: Reactions are maximum and per Main Girder	

1 Based on required unbalanced reaction after span balancing.

2 Based on HL93 Live Loading with three Lanes Loaded at 85% Multilane - Presence Factor

3. TRUNNION REACTION SUMMARY (Use actual design values)

Trunnion Reaction Summary (kip)				
Loads	**Span Closed (0°)**		**Span Full Open (67°)**	
	Horiz.	**Vert.**	**Horiz.**	**Vert.**
Dead	-	1323 (A)	-	1323 (A)[1]
	-	1301 (O)	-	1301 (O)
Min. Live[2]	-	-950	-	-
Impact	-	-217	-	-
Max. Live[3]	-	75	-	-
Impact	-	23	-	-
Wind[4]	-	-	398	122
Note: Reactions are maximum and per Main Girder				

1 Includes 20% Dynamic Load Allowance. Both center locks engaged.

2 Based on HL93 Live Loading with three Lanes Loaded at 85% Multilane - Presence Factor without both center locks engaged.

3 Based on HL93 Truck Load w/Two Lanes Loaded.

4 Longitudinal Direction: 24 psf of base wind pressure acting on the projected area. The base pressure corresponds to elevation 30.0, and was adjusted to design elevation per ***LRFD*** [Section 3.8]. The adjusted average wind pressure is 34.2 psf acting at 53.2' above Trunnion.

4. JACKING NOTE:

Jacking reactions shown are for locations shown and are per Main Girder. Jacking columns (Not in Contract) will be required under each web of Main Girder at CTC Diaphragm. Future Jacking shall be performed without traffic on Bascule Span. Traffic may be returned to the span after Jacks are safely locked and the Leaves are secured.

21.2 Bascule Steel Girders

21.2.1 General

A. Structural steel drawings will be used by used by fabricators and contractors for the production and erection of structural steel members.

B. Check AISC on-line database of available structural steel shapes before specifying a particular steel shape and size. Preference should be given to shapes and sizes with multiple producers due to increased availability and lower cost.

21.2.2 Framing Plan Drawings

Framing plans are required for all bascule spans. At a minimum, show the following information:

A. Lateral bracing.

B. The distance between girders (centerlines).

C. The distance from the baseline/ centerline of construction to adjacent girder.

D. The distance between floorbeams (centerlines).

E. Dimension to center line of field splice from the centerline of trunnion.

F. Diaphragms, trunnion girders, stringers and overhang bracket locations.

G. Temporary bracing required for construction.

H. Girder/floorbeam numbering (Number in ascending order from the tip to the tail)

I. Direction of stationing.

J. Locate centerline of trunnion and live load shoe along baseline.

K. North arrow.

L. Direction of stationing adjacent to the baseline.

M. Counterweight girders/ tubs and counterweight concrete/adjustment pockets along span.

N. Longitudinal, transverse, forward, and rear joints.

O. Fender system and centerline of channel.

P. Centerline of bascule span.

Q. Limits of decking.

R. Centerline of top of web. (Do not show width of top flange) (Box Shapes)

Figure 21.2.2-1 Framing Plan

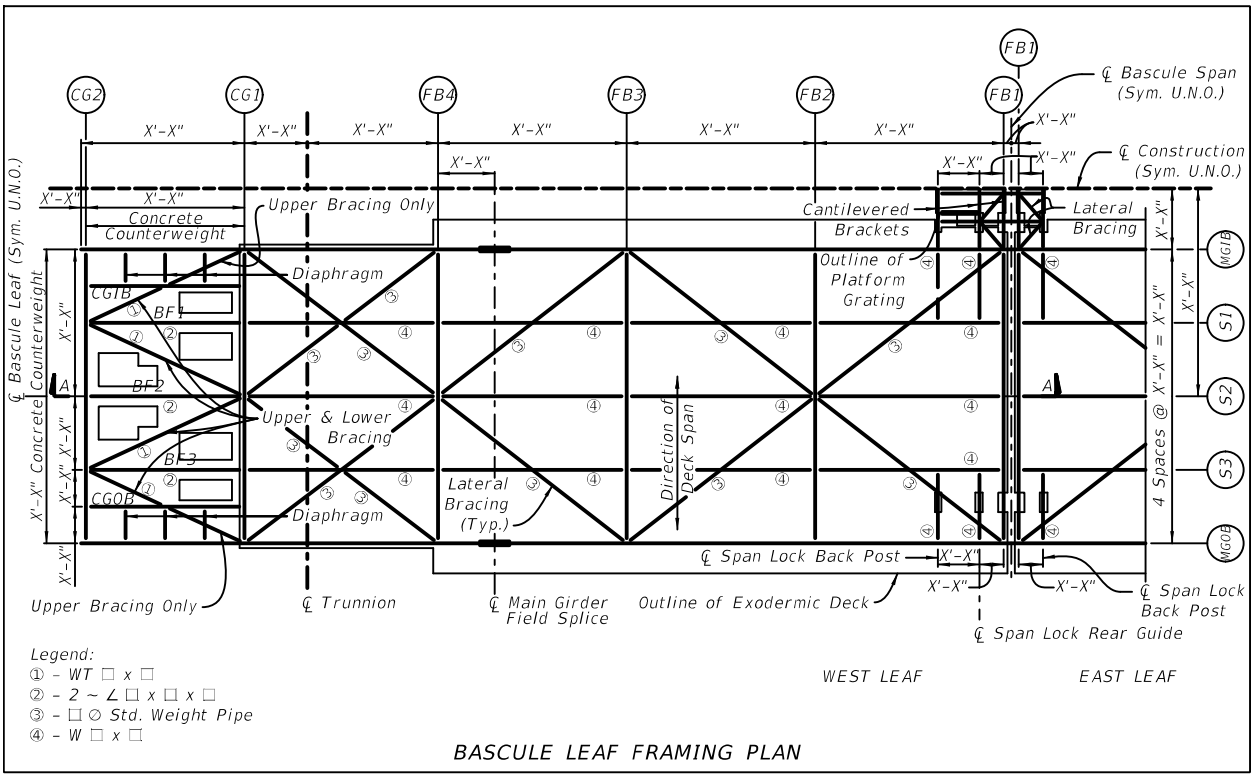

21.2.3 Longitudinal Section Drawings

At a minimum, show the following information for each section:

A. Elevation view of girder.

B. The centerline of trunnion and live load shoe along the Station Line.

C. Trunnion elevation.

D. Floor beams (centerlines) along bascule leaf.

E. Access openings.

F. Bracing locations.

G. Dimension field splices to centerline of trunnion.

H. Angle from centerline of trunnion (horizontal) to centerline of pinion shaft at closed position. Provide angle between the pinion in the open and closed position in relation to centerline trunnion.

I. Counterweight girders/ tubs and adjustment pockets.

Figure 21.2.3-1 Longitudinal Section

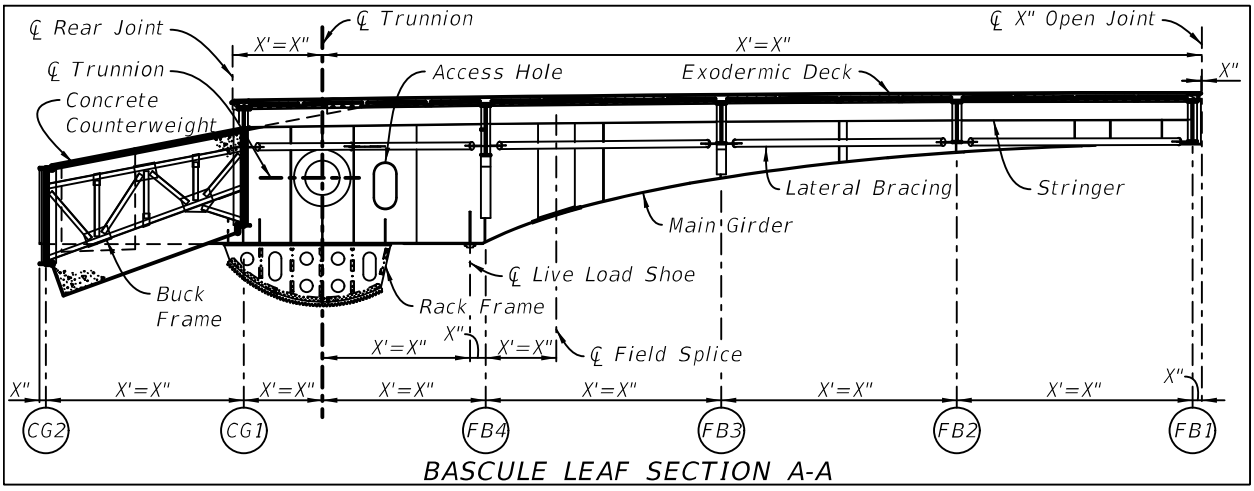

21.2.4 Transverse Section Drawings

Show transverse section of the leaf at each unique floorbeam. At a minimum, show the following information for each section:

A. Dimensions for traffic railing widths, shoulder widths, lane widths, bike lane widths, sidewalks, median width and overall width.

B. Dimension girder to girder spacing and inside girder to centerline of bascule leaf

C. Overhang distance to the centerline of girder.

D. Traffic Railing type. If more than one traffic railing is used (median, railing, etc.) indicate each applicable type.

E. Deck thickness.

F. Centerline of bascule leaf.

G. Centerline of centering device and span locks at FB1.

H. The identification of girders/floorbeams on the Framing Plan consistent with detail sheets.

I. Station Line, PGL, workpoints, cross slope.

J. For box main girders, dimension centerline of web to centerline of girder.

K. Controlling web heights across floor beam.

L. Provide thickness of floorbeam web, flanges, stiffeners and size of connection plate and bottom flange stiffeners.

M. Access openings, access hatches, span lock assemblies, centering devices, rack assembly etc as applicable.

N. Longitudinal joints.

O. Conduit locations.

P. Bracing.

Q. For box main girders, show diaphragms, internal cross frames, diaphragm openings,

and longitudinal stiffeners etc as applicable.

Figure 21.2.4-1 Transverse Section Drawings

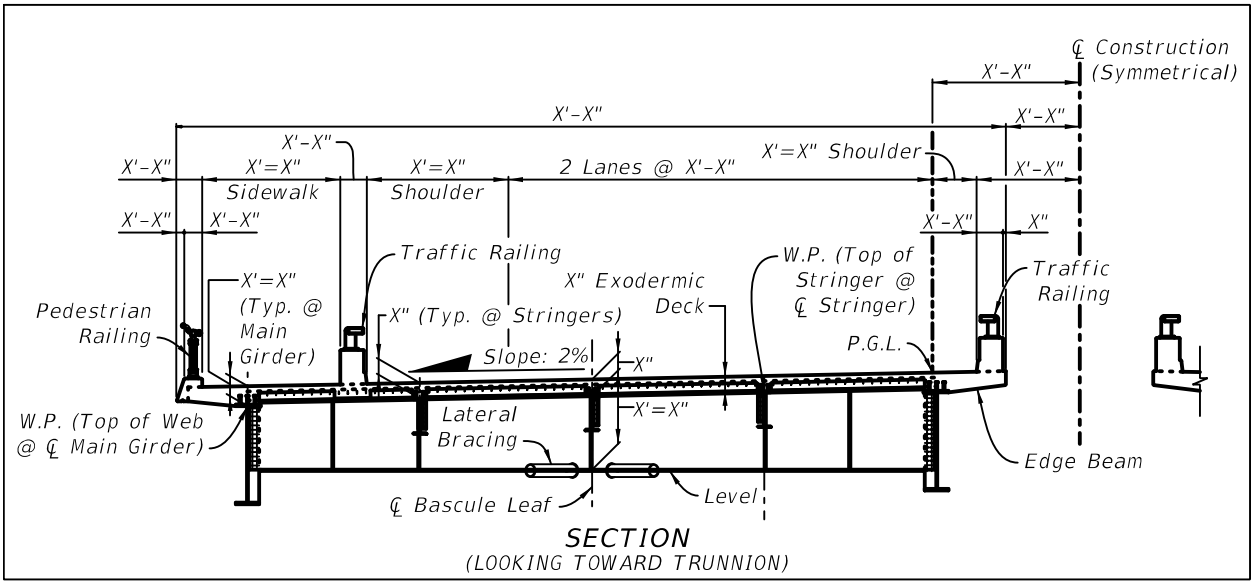

21.2.5 Main Girder Elevation Drawings

Main Girder Elevation sheets are required bascule spans. Detail main girder elevation from tail to tip, going left to right. At a minimum, include the following on the Main Girder Elevation sheet:

A. Elevation view of girder. Provide matchlines for girders that require more than 1 sheet.

B. Top/Bottom view of girder (As required). For box main girders, show lateral bracing in top view and show longitudinal stiffeners in bottom view.

C. Shear connector spacing along centerline of girder (centerline of box for box girders).

D. Flange plate sizes.

E. Web plate size.

F. Weld sizes and types. Reference welding symbols at www.aws.org.

G. Field splices.

H. Shop splices. Designate optional splices as required.

I. Plates to be Charpy V-Notch (CVN) tested shall be identified. Indicate Fracture Critical Members by notation (FCM).

J. Dimensions for length along centerline girder as follows:

   1. From girder end to centerline of bascule span.
   2. From girder end to centerline of trunnion and from centerline trunnion to centerline of live load shoe.
   3. Distance between centerline of bascule span and tip of girder.

4. Between centerline(s) of floorbeam(s) and field splice(s).
5. Girder section changes. Show this dimension for top flange, bottom flange or web section changes.
6. Limits of flange tension and stress reversal zones.

K. Show and dimension any penetrations in the web for conduits, external attachments, etc.

L. Transverse stiffener spacing.

M. Lateral bracing spacing.

N. The distances between floorbeams (centerlines or extensions) measured along the centerline of trunnion.

O. Dimension limits of machining or add separate details.

P. Dimension centerline of span lock guides.

Q. Access opening/hatch locations and spacing.

R. Location and spacing for fill holes, vent holes and drain holes.

S. Show limits of longitudinal stiffeners.

T. In plan view, show centerline of top of web.

U. Show welded shear stud spacing as applicable.

Figure 21.2.5-1 Main Girder Partial Elevation Drawing

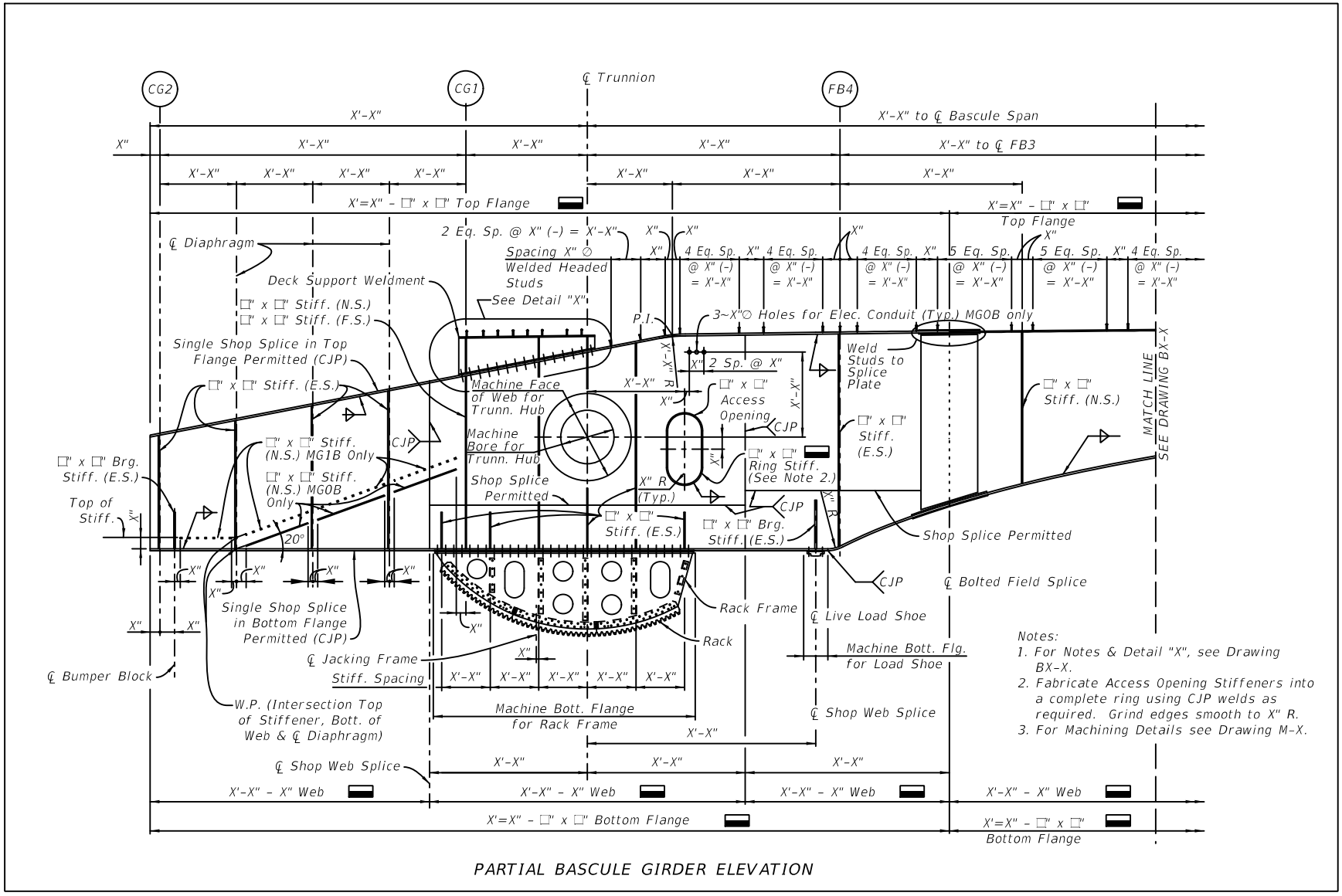

21.3 Rack Assembly And Details

21.3.1 General

A. This chapter covers the design plan details required to construct and install curved racks for bascule bridges.

B. Rack assembly and detail sheets will include all the details necessary to fabricate, assemble, and mount the racks.

21.3.2 Rack Details

At a minimum, include the following on the rack detail:

A. Tooth form and number of teeth

B. Pressure angle and diametral or circular pitch

C. Addendum, dedendum, and face width

D. Pitch radius or diameter

E. Outside radius or diameter and root radius or diameter

F. Tooth thinning for backlash

G. Any required tip relief

H. Define the shape of the gear teeth in the axial direction noting any required lead curve or tooth crowning

I. Chordal addendum and chordal tooth thickness

J. AGMA gear quality number

K. Surface finishes

L. Material designation and hardness

M. Pitch line scribe on both sides of teeth

N. Angular length of rack segment(s)

O. Type, size, and location of stiffeners

Figure 21.3.2-1 Rack Details

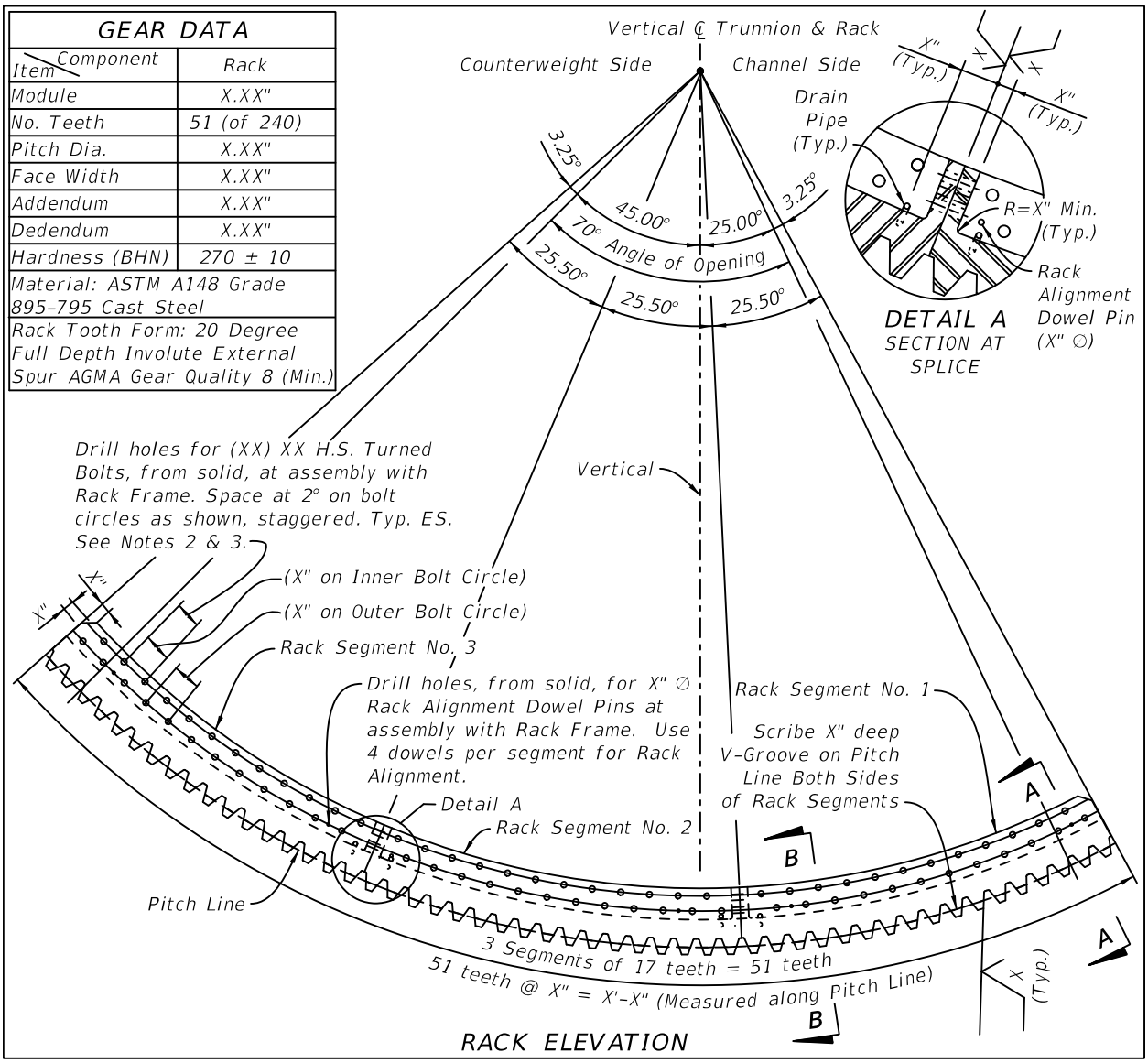

21.3.3 Rack Assembly

At a minimum, include the following in the rack assembly information:

A. Type, size, locations, and quantity of all fasteners and welds required to assemble the rack and mount it to the girder
B. Add a note to caution against tolerance stacking in case of bolt holes
C. Bascule girder machining details
D. Relative position of rack to trunnion
E. Relative position of pinion to rack with the bascule leaf open and closed
F. Shim pack details
G. Size, location, and quantity of access holes

Figure 21.3.3-1 Rack Assembly

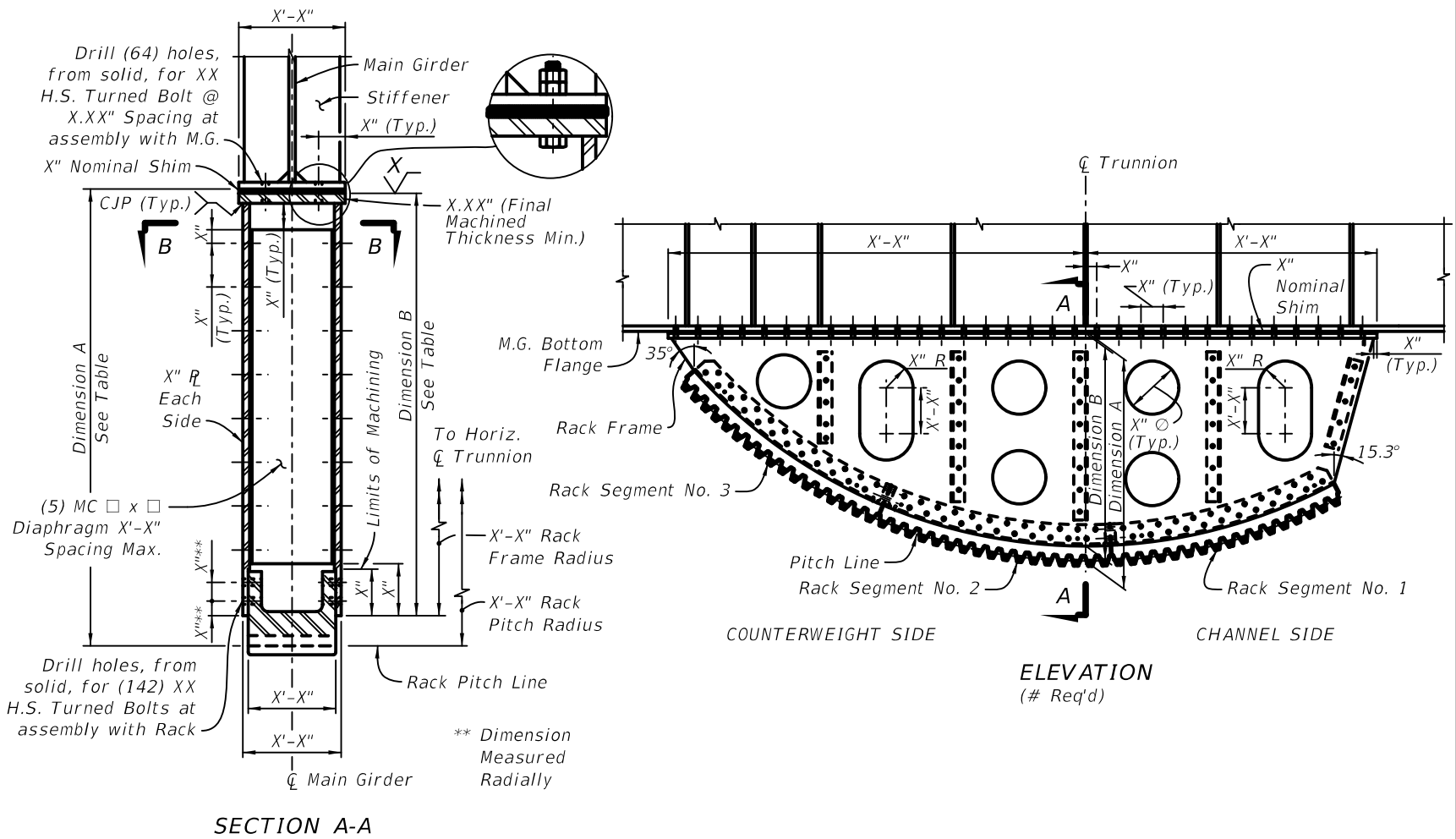

21.3.4 Rack Assembly Design Considerations

Address the following issues when detailing the rack assemblies:

A. Bolt the rack to the bottom flange of the bascule girder.

B. The rack shall rotate concentrically about the trunnion shaft.

C. The bottom flange of the bascule girder may not provide a flat perpendicular surface for mounting the rack.

D. The rack frame shall deflect minimally under load throughout its range of motion.

E. Ease of fabrication and adjustability of the rack.

F. Accessibility of fasteners.

G. Debris accumulation and drainage of the rack frame.

H. Ease of installation and maintenance with consideration given to rack frame accessibility for inspection, cleaning, and painting.

I. Effects of out-of-plane distortion of main girders and rack assemblies during counterweight concrete placement. Include a plan note requiring the counterweight box to be shored during counterweight concrete placement.

21.4 Rack Pinion, Bearing Supports and Bearing Details

21.4.1 General

A. This section covers the design plan details required to construct and install rack pinions, pinion bearings, and bearing supports for bascule bridges.

B. Rack pinion, pinion bearing, and bearing support detail sheets will include all the details necessary to fabricate, assemble, and mount the rack pinions and bearings.

21.4.2 Rack Pinion Details

At a minimum, include the following in the rack pinion details:

A. Tooth form and number of teeth

B. Pressure angle and diametral or circular pitch

C. Addendum, dedendum, and face width

D. Pitch radius or diameter

E. Outside radius or diameter and root radius or diameter

F. Tooth thinning for backlash

G. Any required tip relief

H. Define the shape of the gear teeth in the axial direction noting any required lead curve or tooth crowning

I. Chordal addendum and chordal tooth thickness

J. AGMA gear quality number

K. Surface finishes

L. Material designation and hardness

M. Pitch line scribe on both sides of teeth

N. Pinion shaft length, inside and outside diameter

O. Pinion shaft fits and finishes

P. Number and location of keyways

Q. Keyway fits and finishes

R. Keyway length, width, depth, and radiuses

Figure 21.4.2-1 Pinion Details

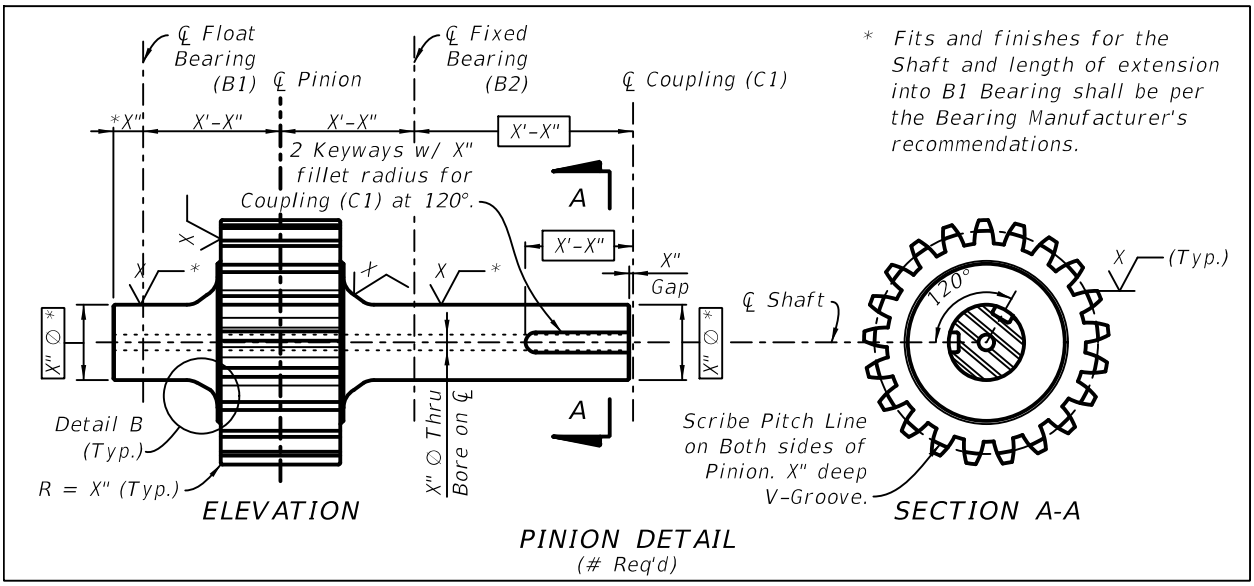

21.4.3 Pinion Bearing Details

A. For sleeve type pinion bearings, at a minimum, include the following in the pinion bearing details:

1. Material designations for bronze sleeves and bearing housing
2. Inside and outside diameter of bushings
3. Bushing and housing fits and finishes
4. Bushing length and flange details

5. Grease groove details
6. Bearing liner details
7. Size, location, and quantity of fasteners
8. Bearing cap lifting eye details

Figure 21.4.3-1 Pinion Bearing

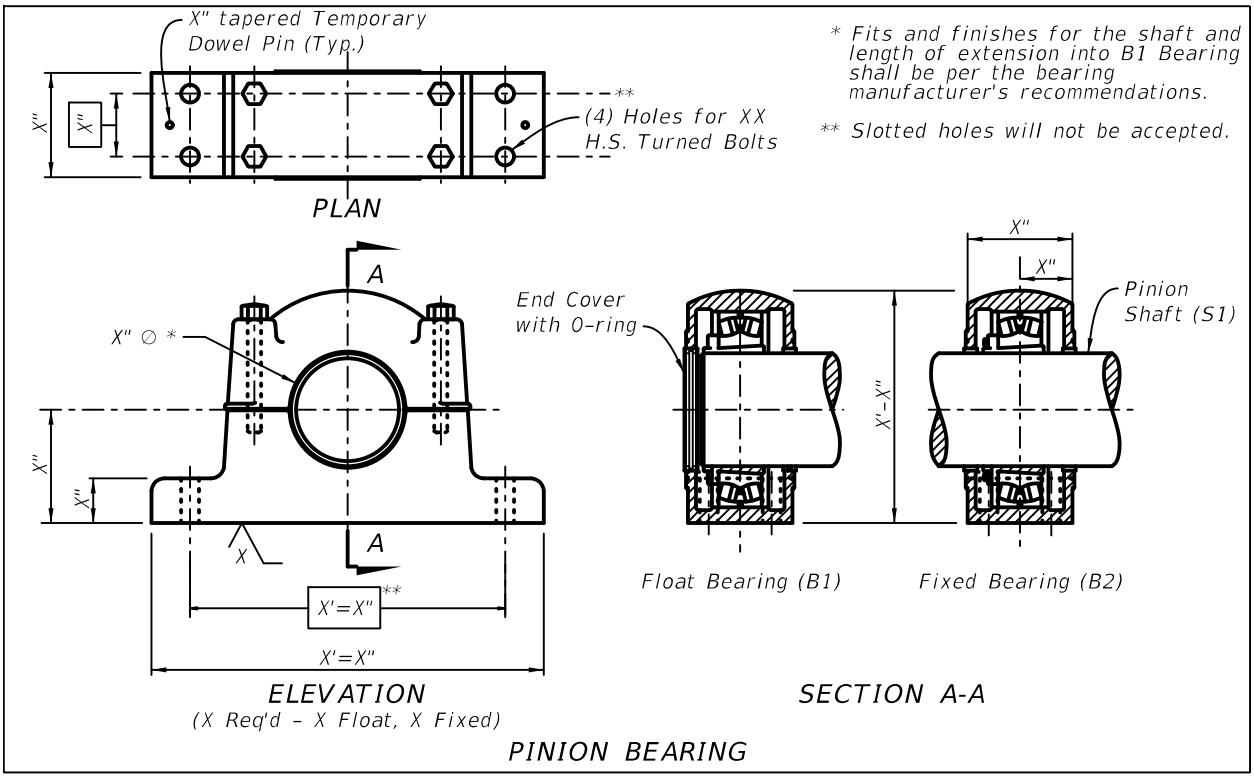

B. For anti-friction roller type pinion bearings, at a minimum, include the following in the pinion bearing details:

1. Bearing type and size
2. Bearing housing envelope dimensions
3. Designation of expansion or non-expansion bearings
4. While bearing will be supplied without mounting holes, the size and location of the mounting fasteners and dowels will be shown
5. Surface finish for mounting surface
6. Bearing load diagram

21.4.4 Pinion Bearing Support Details

At a minimum, include the following in the pinion bearing support detail:

A. Nominal dimensions, tolerances, flatness, perpendicularity, parallelism, and finishes

B. Indicate clips of proper size at corners of stiffeners and edge clearance for stiffeners

C. Designate welds

D. Size and locate fastener holes for machinery and anchors

E. Anchor details

F. Indicate base preparation for grouting including vent holes and jacking screws

G. Indicate drain holes

H. Material designation and member thicknesses

I. Shim details

21.4.5 Rack Pinion Assembly Design Considerations

Address the following issues when designing and detailing the rack pinion assembly:

A. Ease of fabrication

B. Accessibility of fasteners and anchors

C. Debris accumulation and drainage

D. Weldability, strength of welds, and stiffness of assembly

E. Room for hydraulic anchor tensioning equipment

F. Bearing lubrication

G. Place bearing close to the points of loading and located so the applied bearing pressure will be as uniform as possible

21.5 Trunnion Assembly, Bearing Supports and Details

21.5.1 General

A. This chapter covers the design plan details required to construct and install trunnion shafts, trunnion hubs, trunnion bearings, and trunnion bearing supports for bascule bridges.

B. Trunnion assembly, bearing supports, and detail sheets will include all the details necessary to fabricate, assemble, and mount the trunnion assemblies.

21.5.2 Trunnion Assembly Details

Trunnion assemblies shall be designed to transfer span loads to the bascule pier. At a minimum, include the following in the trunnion assembly details:

A. Trunnion shaft details

B. Hub details

C. Backing ring details

D. Dowel details

E. Fastener details

F. Alignment plug details

G. Material designations and hardness

H. Trunnion shaft, hub, and girder fits and finishes

I. Girder machining details

J. Trunnion deflection diagram

Figure 21.5.2-1 Trunnion Assembly

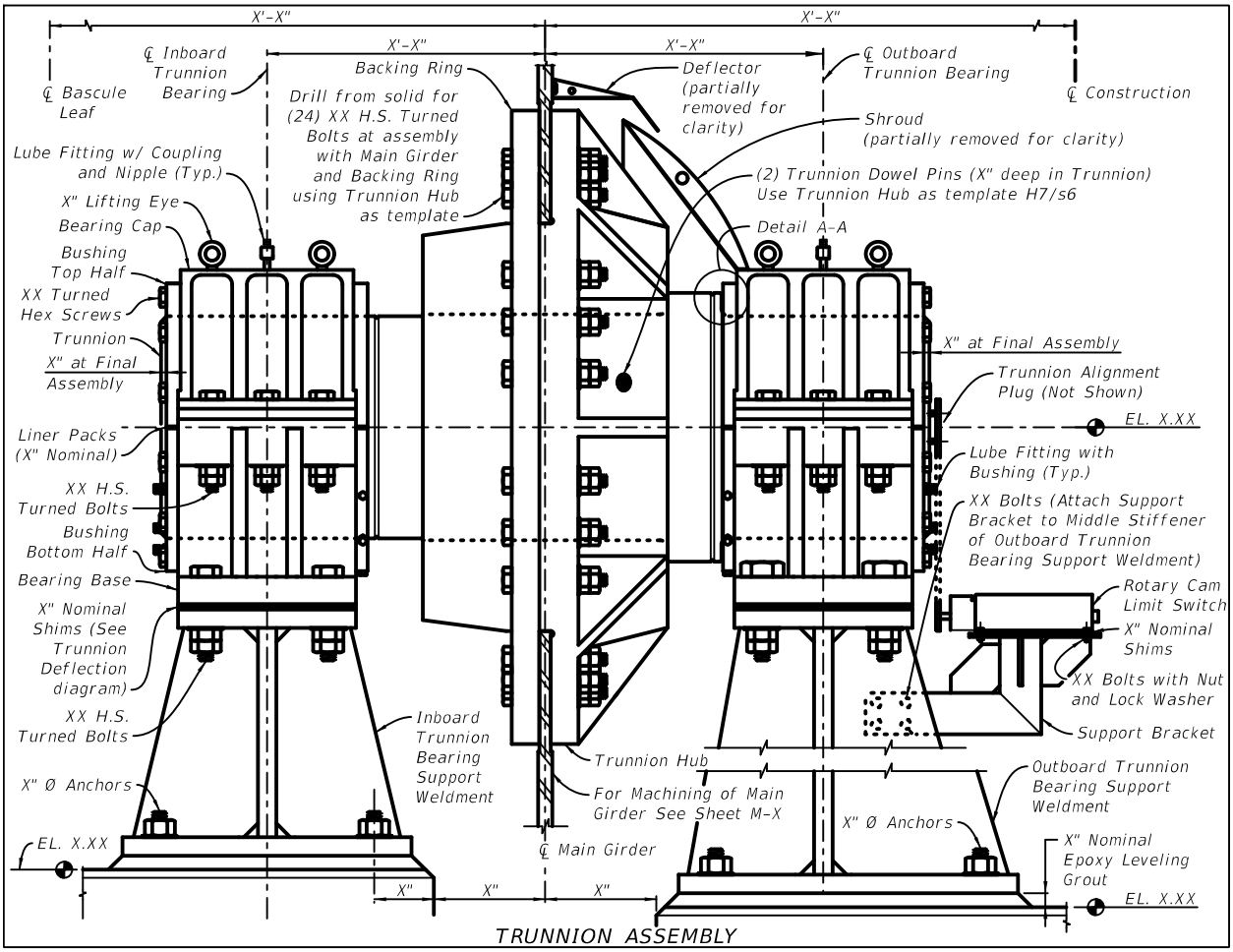

21.5.3 Trunnion Bearing Details

A. For sleeve type trunnion bearings, include, at minimum, the following in the trunnion bearing details:

1. Material designations for bronze sleeves and bearing housing
2. Inside and outside diameter of bushings
3. Bushing and housing fits and finishes
4. Bushing length and flange details
5. Grease groove details
6. Bearing liner details
7. Size, location, and quantity of fasteners
8. Bearing cap lifting eye details
9. Thrust gap dimension

B. For anti-friction roller type trunnion bearings, include, at a minimum, the following in the trunnion bearing details:

1. Bearing type and size
2. Bearing housing envelope dimensions
3. Designation of expansion or non-expansion bearings
4. While bearing will be supplied without mounting holes, the size and location of the mounting fasteners and dowels will be shown.
5. Surface finish for mounting surface
6. Thrust gap dimension

21.5.4 Trunnion Bearing Support Details

At a minimum, include the following in the trunnion bearing support detail:

A. Nominal dimensions, tolerances, flatness, perpendicularity, parallelism, and finishes

B. Indicate clips of proper size at corners of stiffeners and edge clearance for stiffeners

C. Designate welds

D. Size and locate fastener holes for machinery and anchors

E. Anchor details

F. Indicate base preparation for grouting including vent holes and jacking screws

G. Indicate drain holes

H. Material designation and member thicknesses

I. Shim details

21.5.5 Trunnion Assembly Design Considerations

Address the following issues when detailing the trunnion assemblies:

A. Ease of fabrication and order of assembly

B. Accessibility of fasteners and anchors

C. Debris accumulation and drainage

D. Weldability, strength of welds, and stiffness of assembly

E. Room for hydraulic anchor tensioning equipment

F. For sleeve bearings, the trunnion shaft shall have a thrust surface for the bearing bushing.

G. For sleeve bearings, extend the trunnion shaft ½" beyond the face of the bearing bushing.

H. Do not use keys between the trunnion shaft and hub.

I. Provide shoulders with fillets of appropriate radius and provide clearance for thermal expansion between shoulders and bearings.

J. Provide a 2-inch long counter bore concentric with the trunnion journals at each of the hollow trunnion ends.

K. In addition to the shrink fit, drill and fit dowels of appropriate size through the hub into the trunnion after the trunnion is in place.

L. Provide Hubs and Rings with a mechanical shrink fit.

M. Bearing lubrication

N. Place bearing close to the points of loading and located so the applied bearing pressure will be as uniform as possible.

21.6 Machinery Layout and Elevation

21.6.1 General

A. This chapter covers the design plan details required to show the machinery layout and elevations for bascule bridges.

B. Machinery layout and elevation sheets will include all the details necessary to illustrate the position and orientation of equipment.

21.6.2 Machinery Layout and Elevation Details

Show the span drive machinery and trunnion assemblies on the bascule pier in the machinery layout and elevation sheets. Show all permanent structures relative to the machinery. Show the outline of the bascule pier and access platforms in both plan and elevation views. Show and label all machinery components. Indicate elevations for machinery platforms, pinion shafts, trunnion platforms, and trunnion shafts. Show relative locational dimensions for major pieces of equipment. Verify 30" service clearance around drive system components.

Figure 21.6.2-1 Machinery Partial Elevation

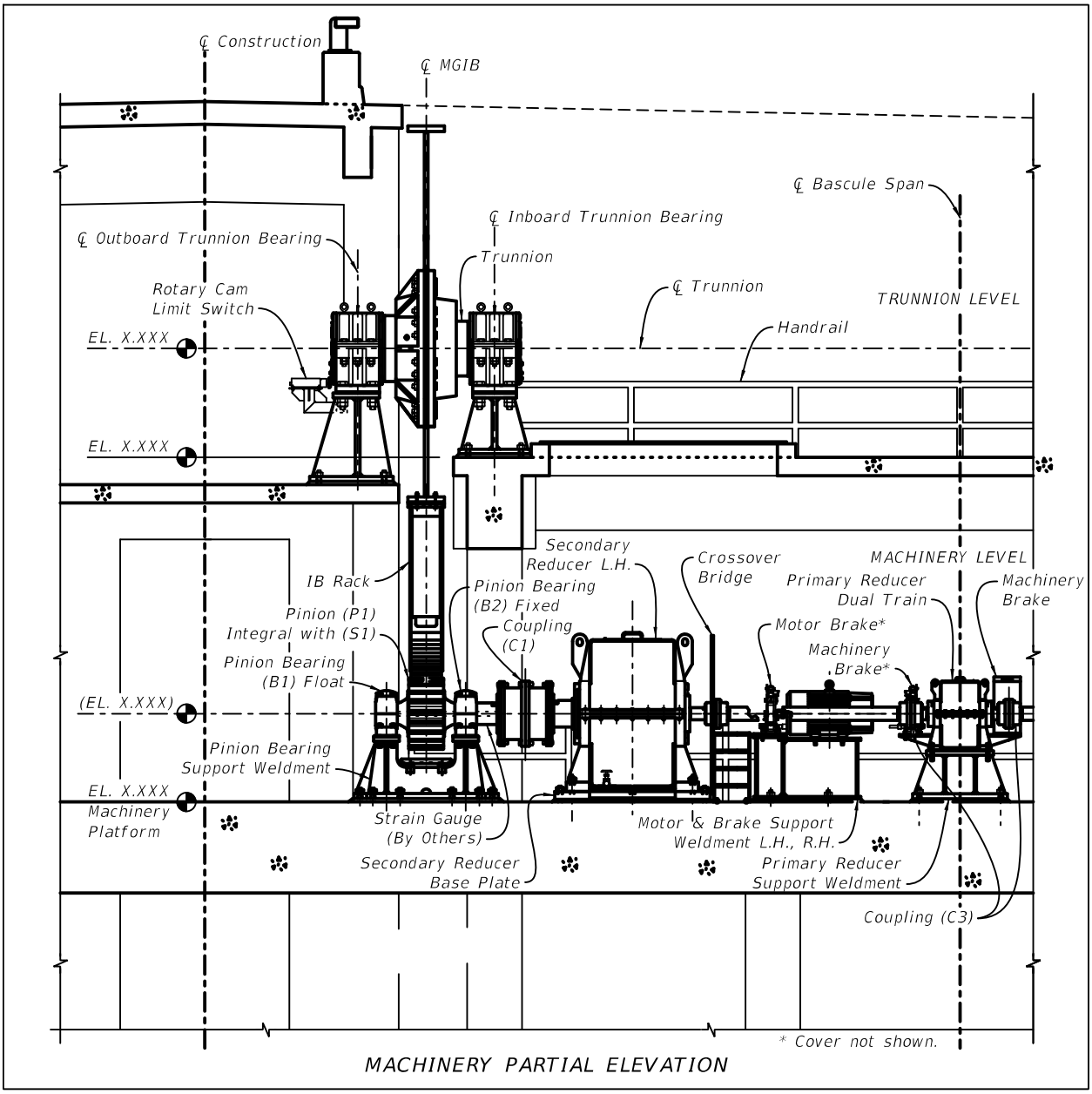

21.7 Submarine Cable

21.7.1 Submarine Cable Detail Drawings

The following is a sample of Submarine Cable notes to be included on the Submarine Cable Details sheet. Place these notes on the Submarine Cable Details sheet and modify for project-specific requirements. At a minimum, show the following information:

A. Dimensions shown are for reference only. Size components per project requirements.

B. Provide all Stainless Steel (ANSI 316) hardware.

C. Permanently seal all submarine cable penetrations from water intrusion.

D. Provide sub-cable supports per manufacturer recommendation for each submarine cable.

Figure 21.7.1-1 Typical Submarine Cable Terminal Cabinet

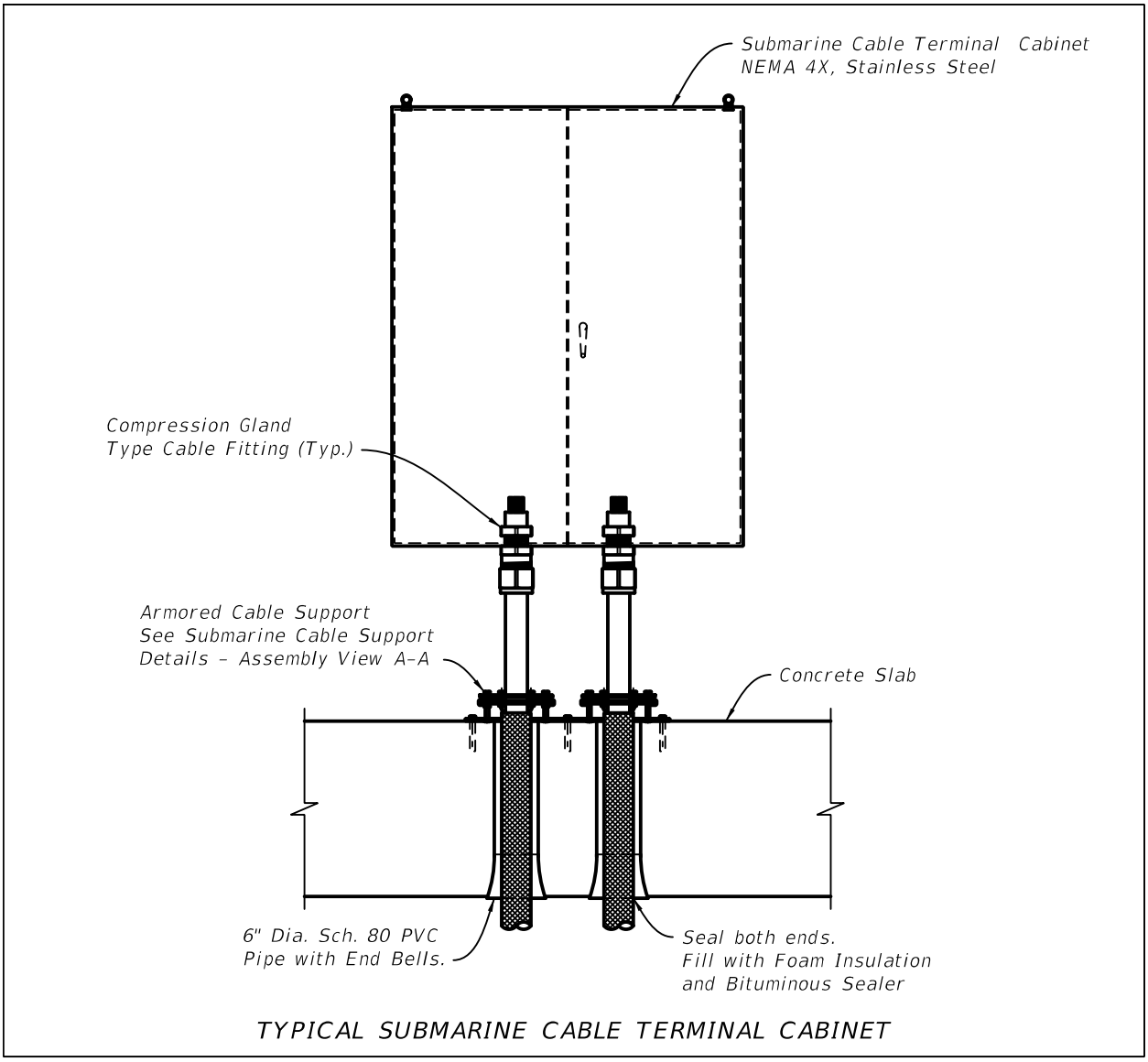

Figure 21.7.1-2 Submarine Cable Support Details

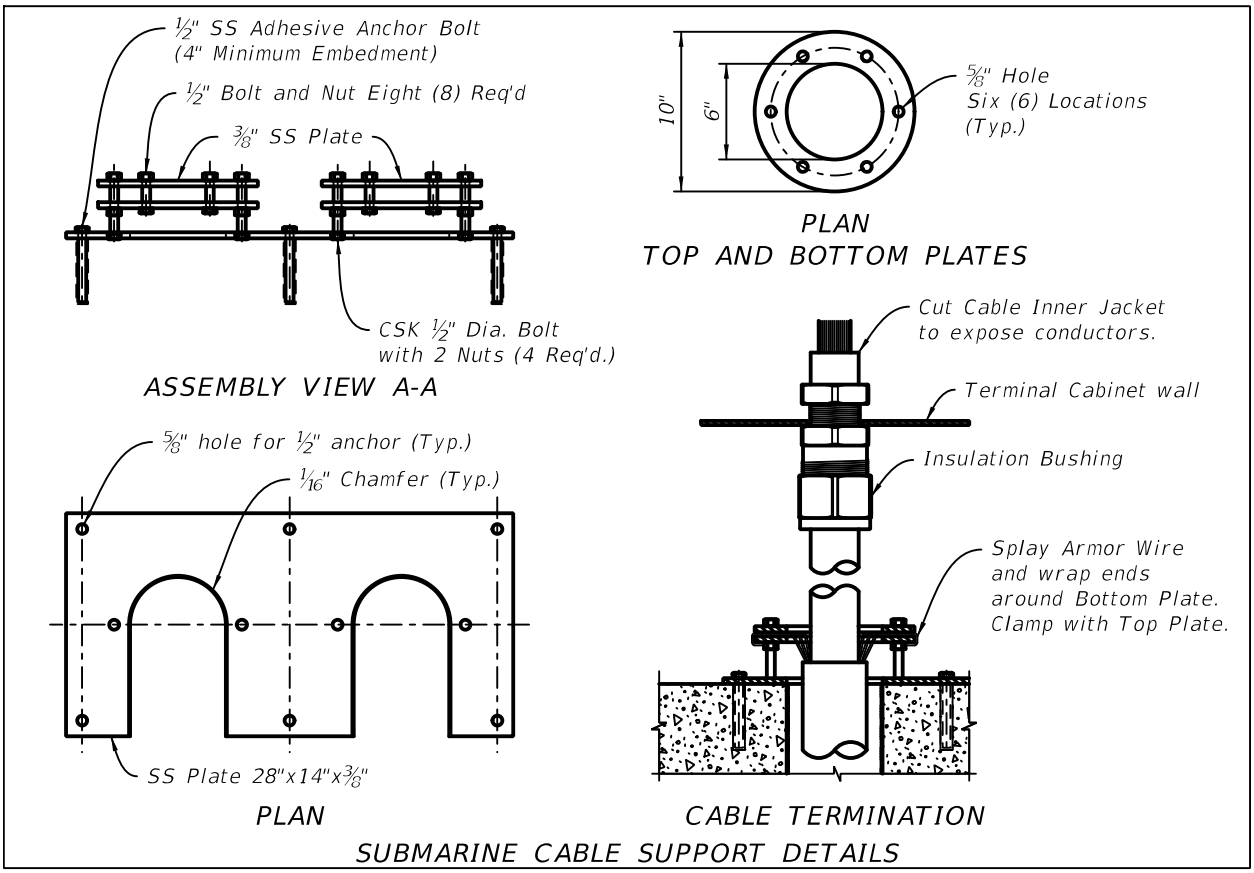

Figure 21.7.1-3 Submarine Cable Trench

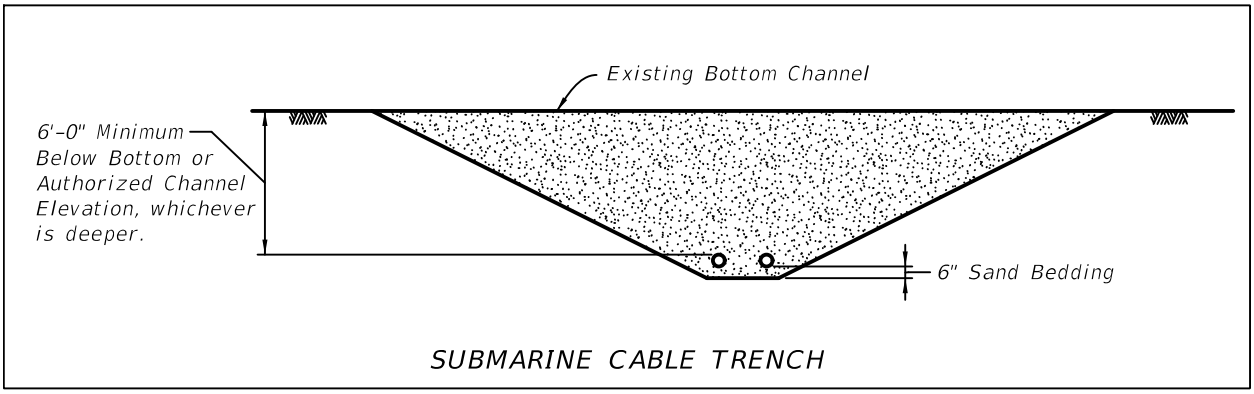

21.8 Centering Devices

21.8.1 Centering Device Detail Drawings

The following is a sample of Centering Device notes to be included on the Centering Device Detail sheet. Place these notes on the Centering Device Detail sheet and modify for project-specific requirements. At a minimum, show the following information:

A. Dimensions shown are for reference only. Size components per project requirements.

B. Fabricate Guide and Receiver from ASTM A27 Grade 70-36 Carbon Steel Casting.

C. Set Guide and Receiver after bascule leaves have been set and aligned.

D. Show position of centering devices on main girders in the Bascule Leaf drawings.

E. Adjust shims to provide 3½" overlap at field assembly for a mean structure temperature of 70° F.

Figure 21.8.1-1 Centering Device Details

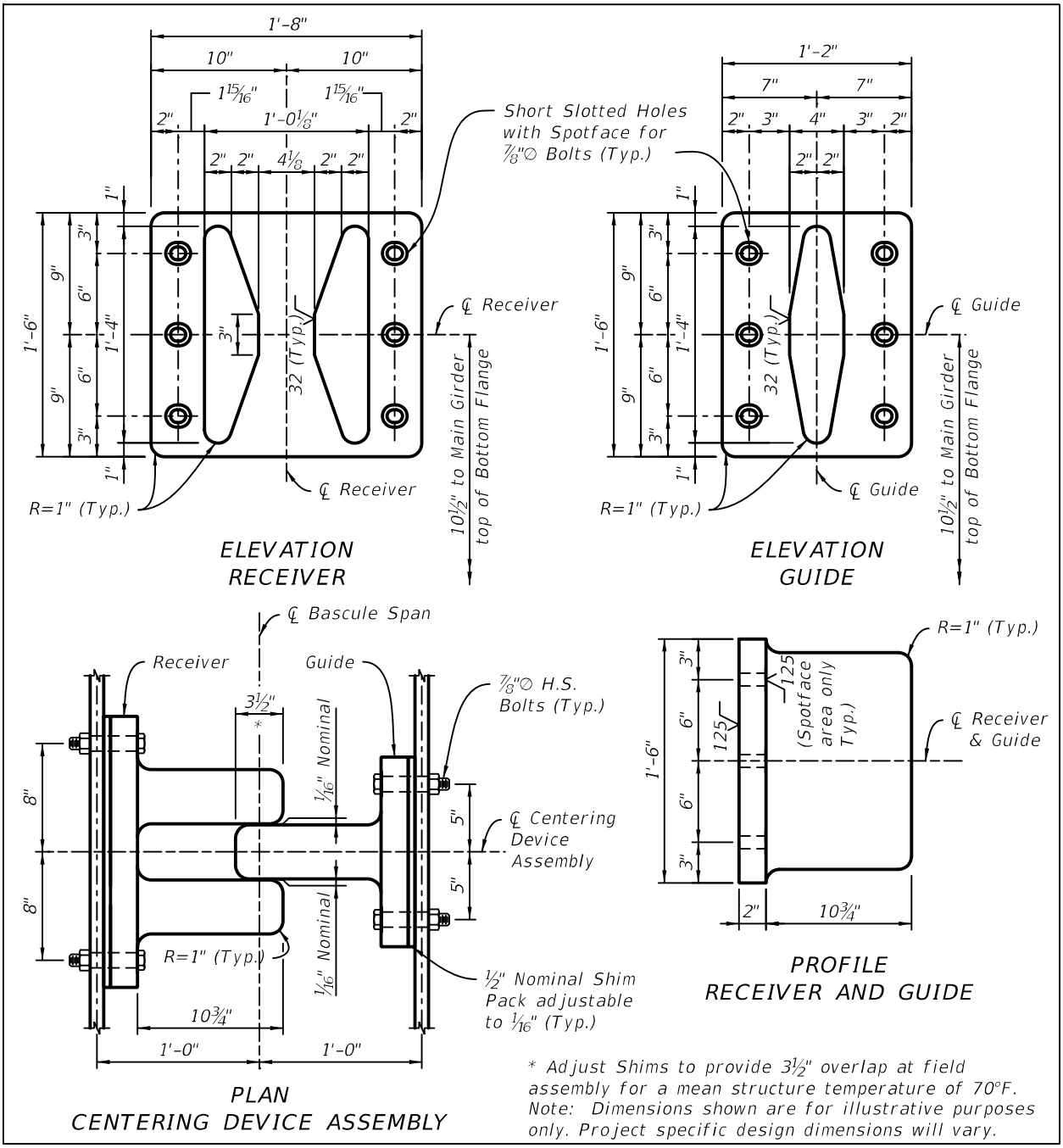

21.9 Counterweight Adjustment Blocks

21.9.1 Counterweight Adjustment Blocks Detail Drawings

Include the following notes and details as required for project specific conditions:

Note: Provide concrete or cast-iron counterweight blocks as required.

Figure 21.9.1-1 Concrete Counterweight Adjustment Block Details

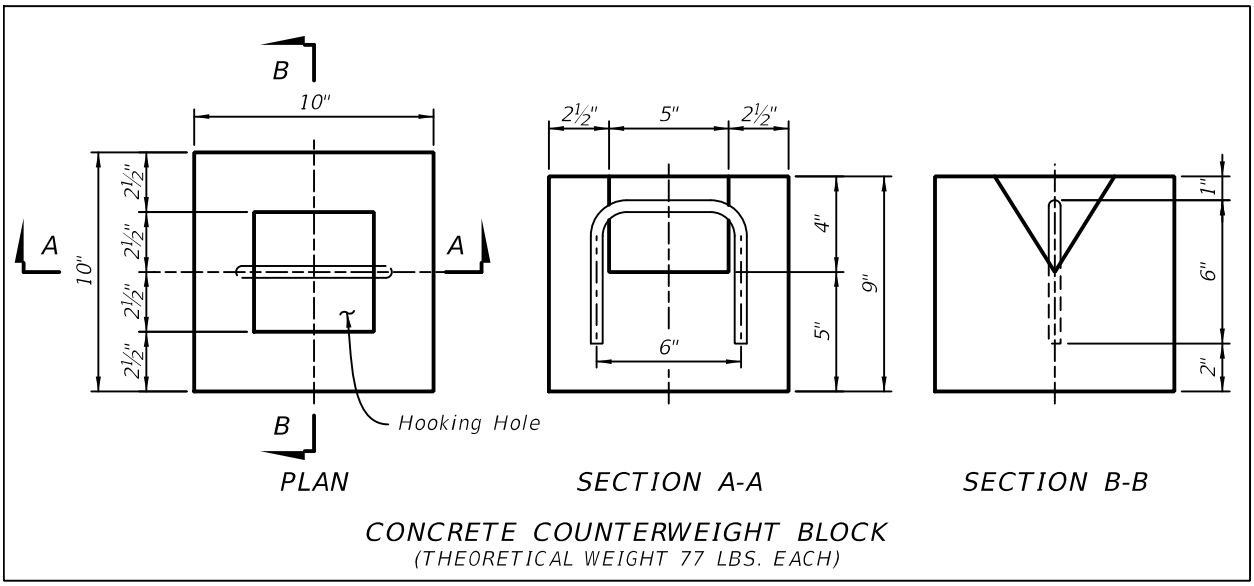

Figure 21.9.1-2 Cast Iron Counterweight Adjustment Block Details

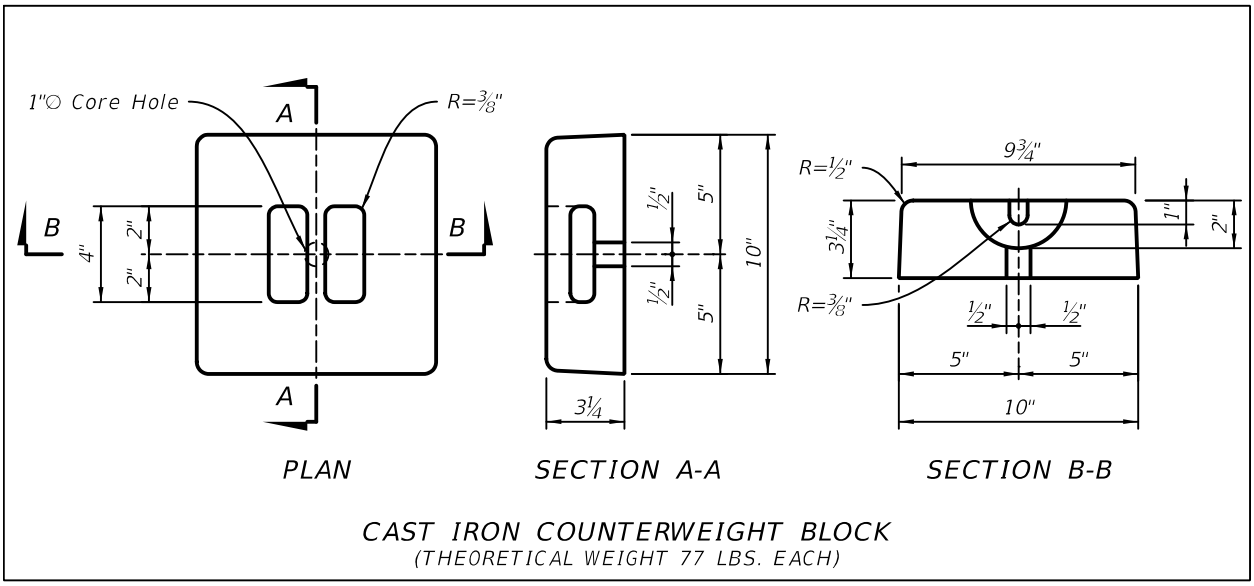

Figure 21.9.1-3 Counterweight Block Handle Details

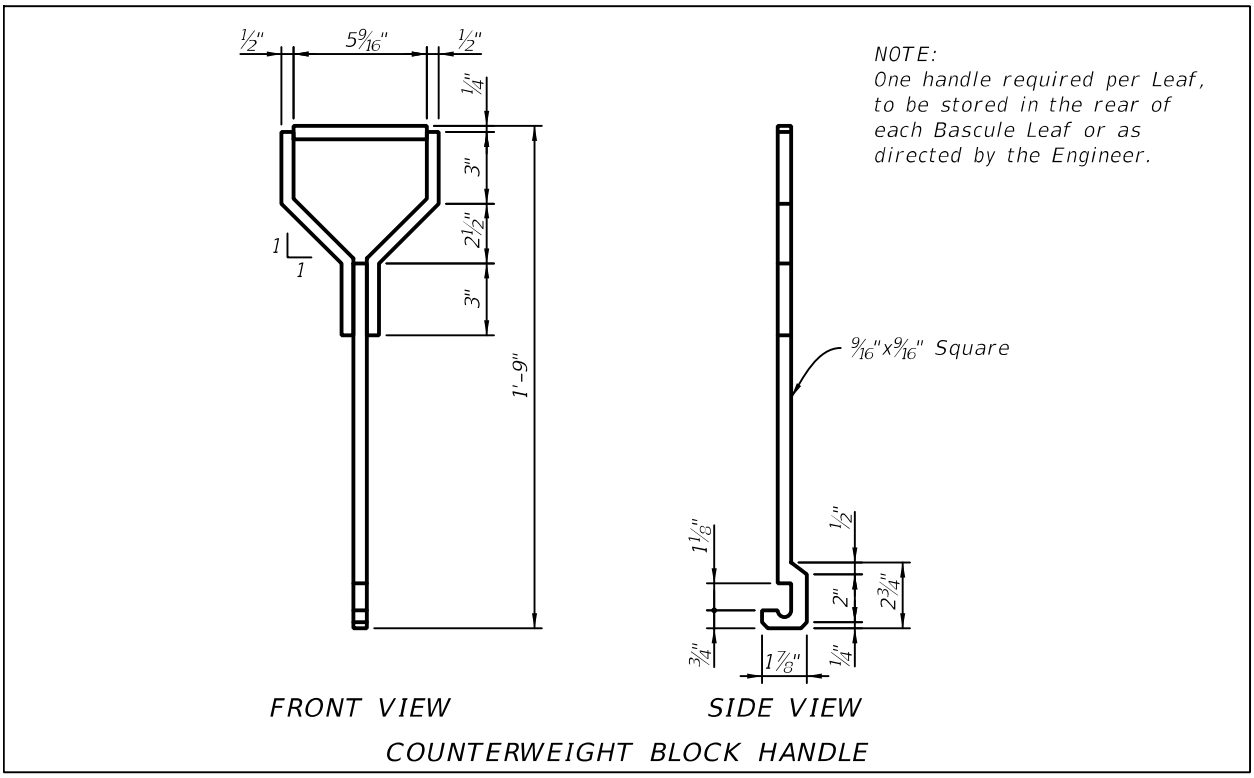

21.10 Live Load Shoes

21.10.1 Live Load Shoe Detail Drawings

The following is a sample of Live Load Shoe notes to be included on the Live Load Shoe Detail sheet. Place these notes on the Live Load Shoe Detail sheet and modify for project-specific requirements. At a minimum, show the following information:

A. Dimensions shown are for reference only. Size components per project requirements.

B. Reference Standard Specifications Section 460 (Structural Steel and Miscellaneous Metals) and Movable Bridge Technical Special Provisions Article 468-9 (Live Load Shoes).

C. All material shall be ASTM A709, grade 50, except shims which shall be stainless steel, Type 304, ASTM A167.

D. Adjust shims so that there is at least 70% line contact between each rocker plate and bearing plate at final assembly with the bridge lowered and the span locks engaged.

E. Anchor bolts to be either cast in place ("J" bolts) or inserted into formed holes and grouted with an approved epoxy grout.

F. Grind exposed corners of the bearing plate and the rocker plate to 1/8" minimum radius and break all sharp edges.

Figure 21.10.1-1 Live Load Shoe Details

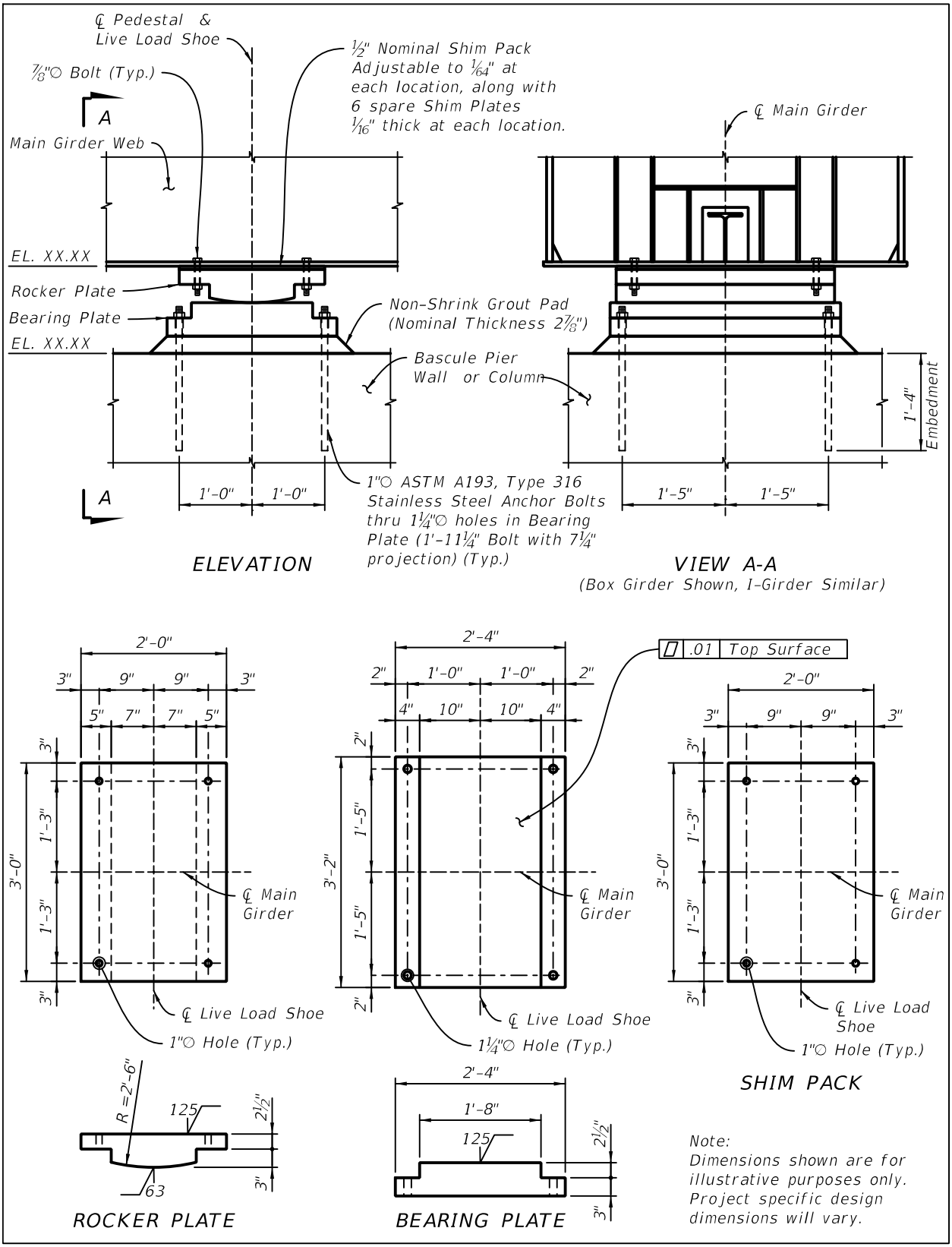

21.11 Span Locks

21.11.1 Span Lock Detail Drawings

Span Lock Detail Drawings are required for all bascule spans. At a minimum, show the following information (See Figure 21.11.1-1 and Figure 21.11.1-2):

A. Plan and Elevation of the Span Lock assembly and surround steel members.

B. Span Lock Material List (Including required material type and grade).

C. Hydraulic Parts List.

D. Span Lock Hydraulic Schematic.

E. Provide Operational pump specifications for normal operation.

F. Enlarged details:

   1. Lock Bar
   2. Clevis Pin/lock bar
   3. Font Guide and Receiver Assembly
   4. Rear Guide Assembly

G. Provide access locations/hatches if in traffic railings (Girder Bridges only).

H. Provide access locations/hatches for lubrication manifolds in traffic railings (Box Girder Bridges only).

I. Provide readily accessible local disconnect switches at street level.

Figure 21.11.1-1 Span Lock Plan and Section

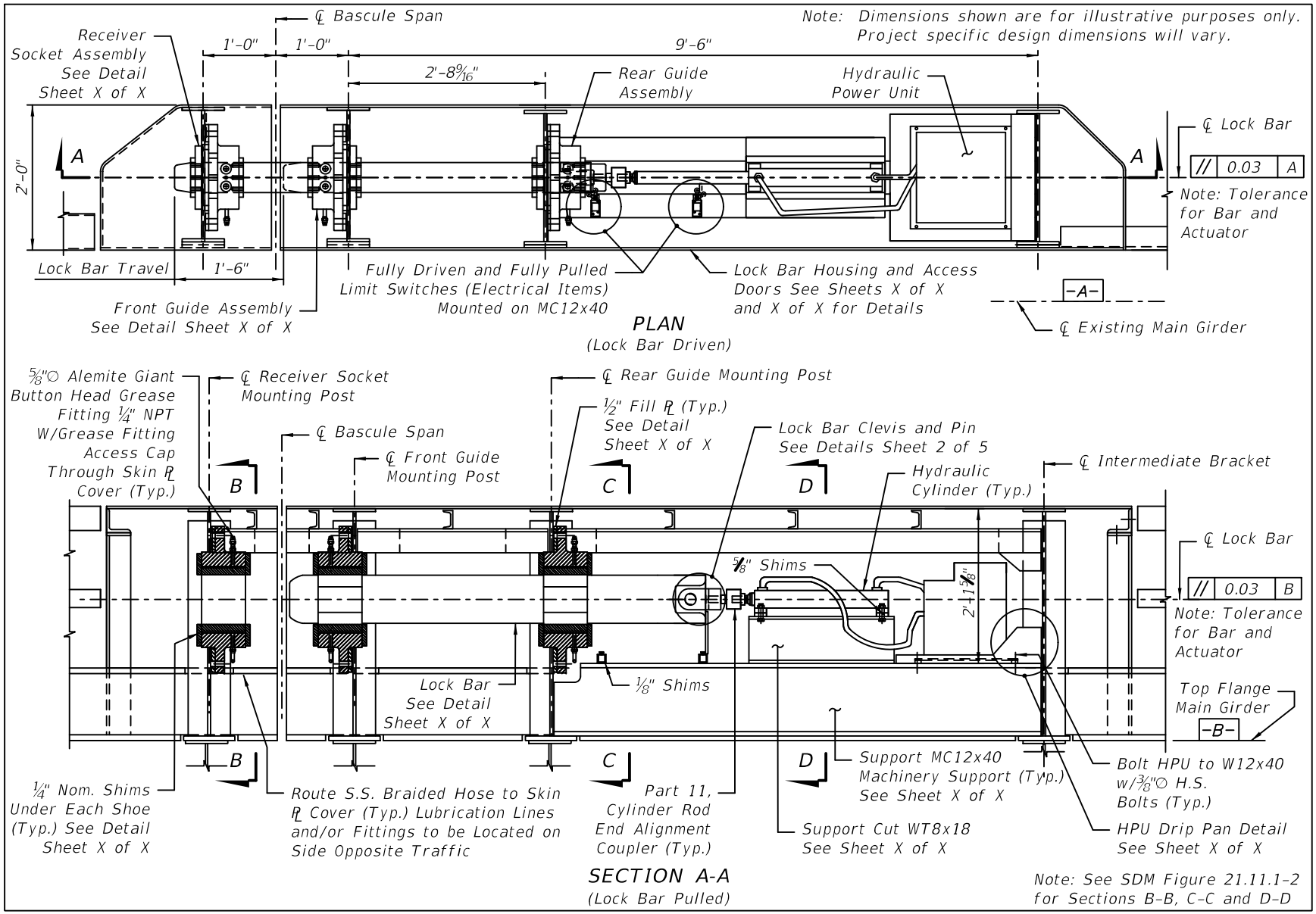

Figure 21.11.1-2 Span Lock Details

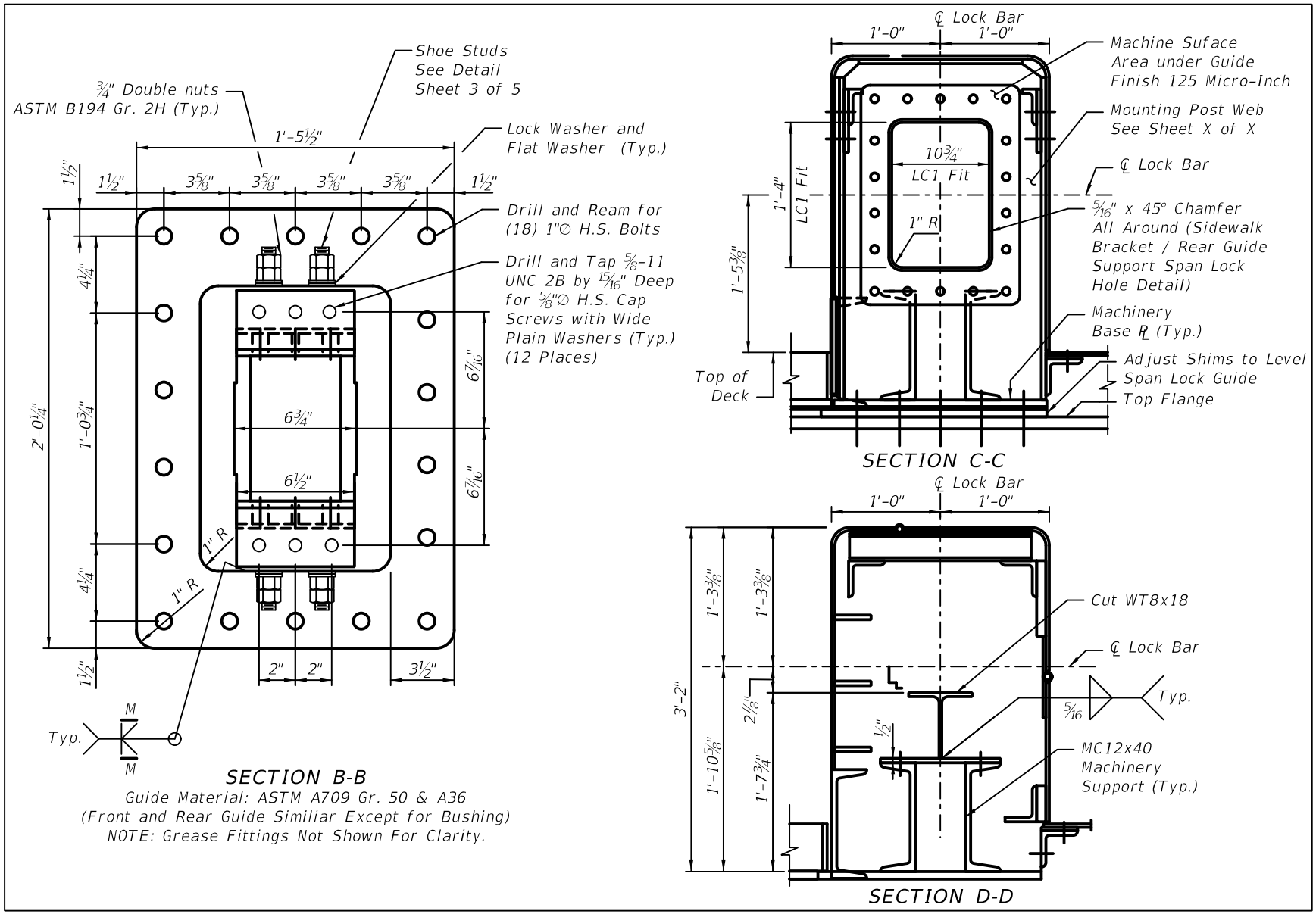

21.12 Bascule Leaf Railings

21.12.1 Bascule Leaf Railing Detail Drawings

At a minimum, show the following information (See Figure 21.12.1-1, Figure 21.12.1-2 and Figure 21.12.1-3): Dimensions shown are for reference only. Size components per project requirements.

A. All steel elements shall be in conformance with ASTM A709 Grade 50, except for TS sections which shall be in conformance with ASTM A500, Grade B.

B. Railing assembly shall be galvanized per ASTM A123. Apply a zinc paint coating over field welded areas in conformance with the Specifications.

C. The railing shall be preassembled to bascule leaf in the shop to ensure the fit-up and proper final geometry.

D. Provide galvanized bolts for connection to floorbeams/bascule leaf.

E. Adjustable shim pack under the railing to reduce field fit-up issues.

F. The traffic railing and all its connections shall be designed for TL-4 loading, as defined in ***LRFD***.

Figure 21.12.1-1 Pedestrian Railing Section

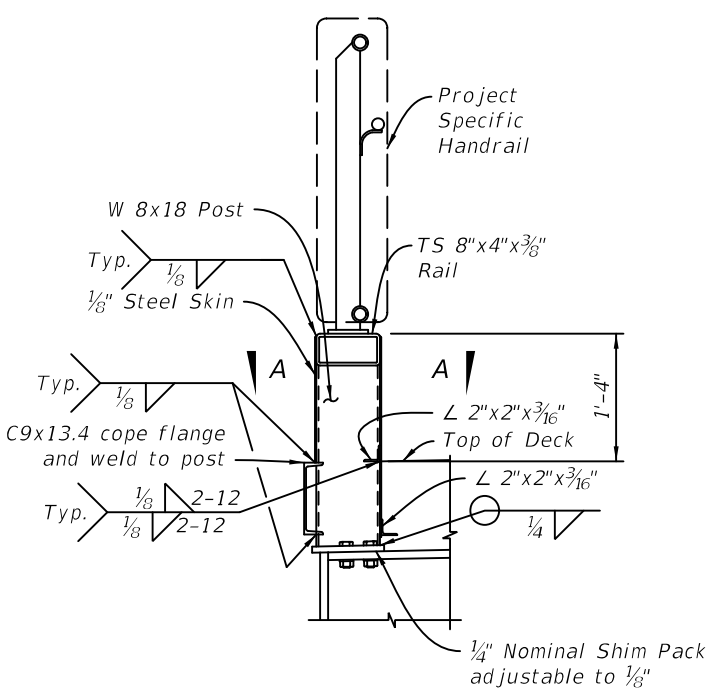

PEDESTRIAN RAILING SECTION

Note:
Contractor shall provide additional temporary bracing, as necessary, during the galvanizing process to prevent warping of skin plate and damage to the railing. The bracing shall then be removed and all uncoated areas as part of the removal shall be repaired. The cost of any such temporary bracing shall be included in the cost of the Pedestrian Railing.

Figure 21.12.1-2 Traffic Railing Sections

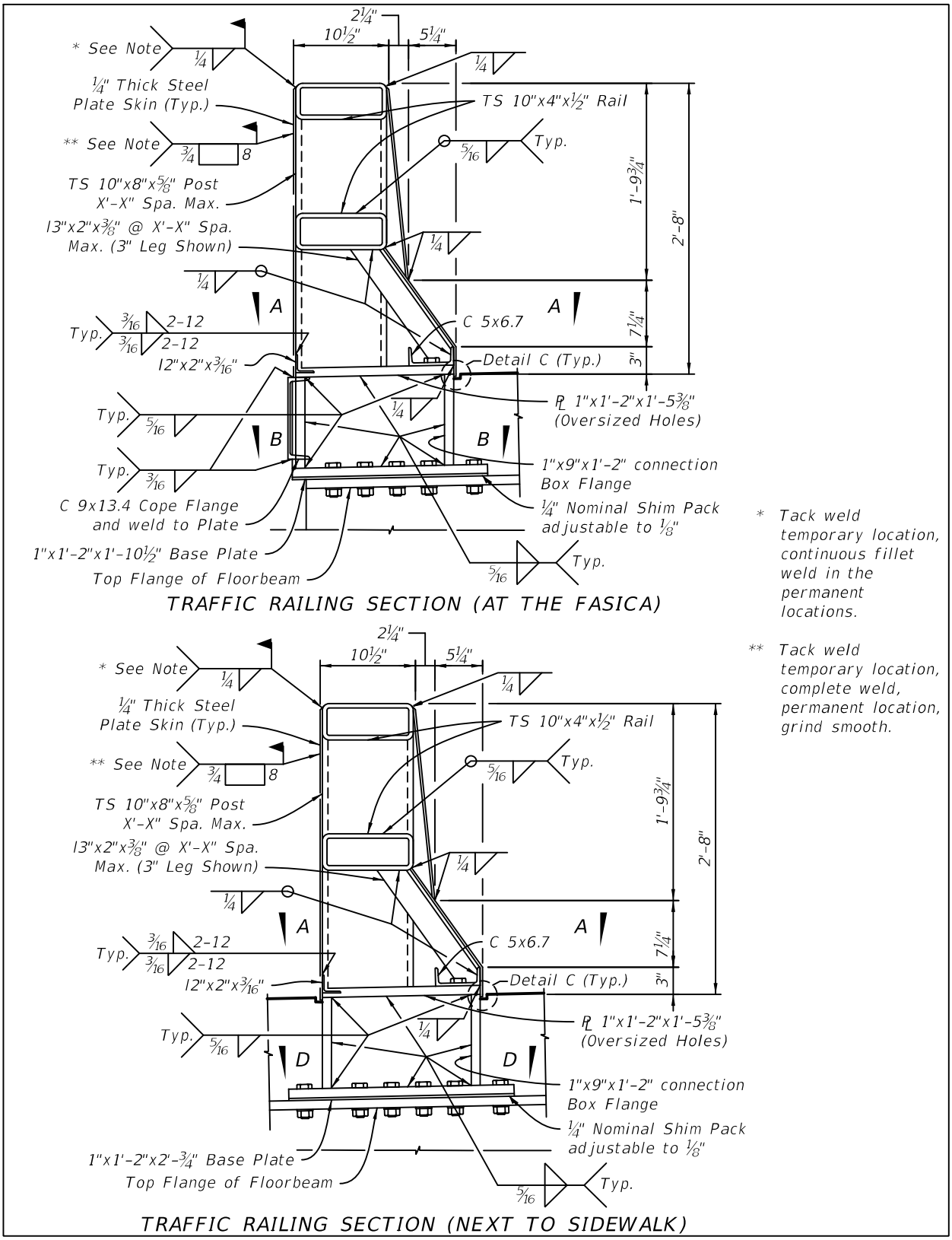

Figure 21.12.1-3 Railing Field Splice Details

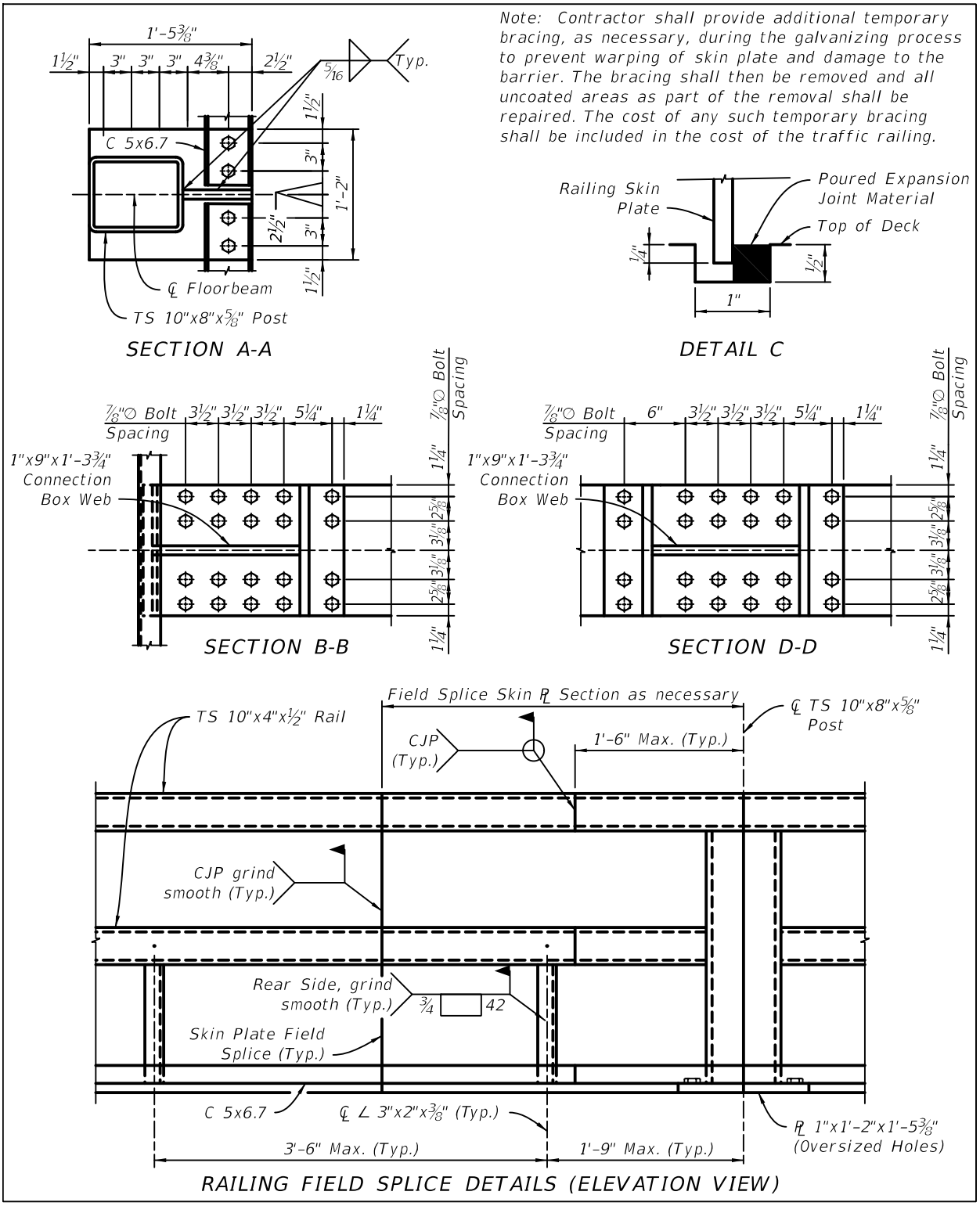

21.13 Bascule Leaf Deck Joints

21.13.1 Bascule Leaf Deck Joint Detail Drawings

Transverse and Longitudinal Joint Detail Drawings are required for all bascule spans. At a minimum, show the following information (See Figure 21.13.1-1 and Figure 21.13.1-2): Dimensions shown are for reference only. Size components per project requirements.

A. Plan view for each joint assembly

B. Enlarged details at joint intersections (As required).

C. Plates and angles shall be fabricated from ASTM A709 Grade 36 or 50 Steel, based on project requirements and availability.

D. Anchor studs shall be in accordance with ASTM A108.

E. Assemblies shall be galvanized after fabrication.

F. Traffic plates shall be removable.

G. Joint material shall be 3/16" Thick continuous neoprene reinforced with a double layer woven polyester fabric.

H. Joints shall be recessed from traffic plate to provide sufficient flexibility in narrower joints.

I. Vent hole locations

J. List of required drawings:

Figure 21.13.1-1 Bascule Leaf Rear Joint

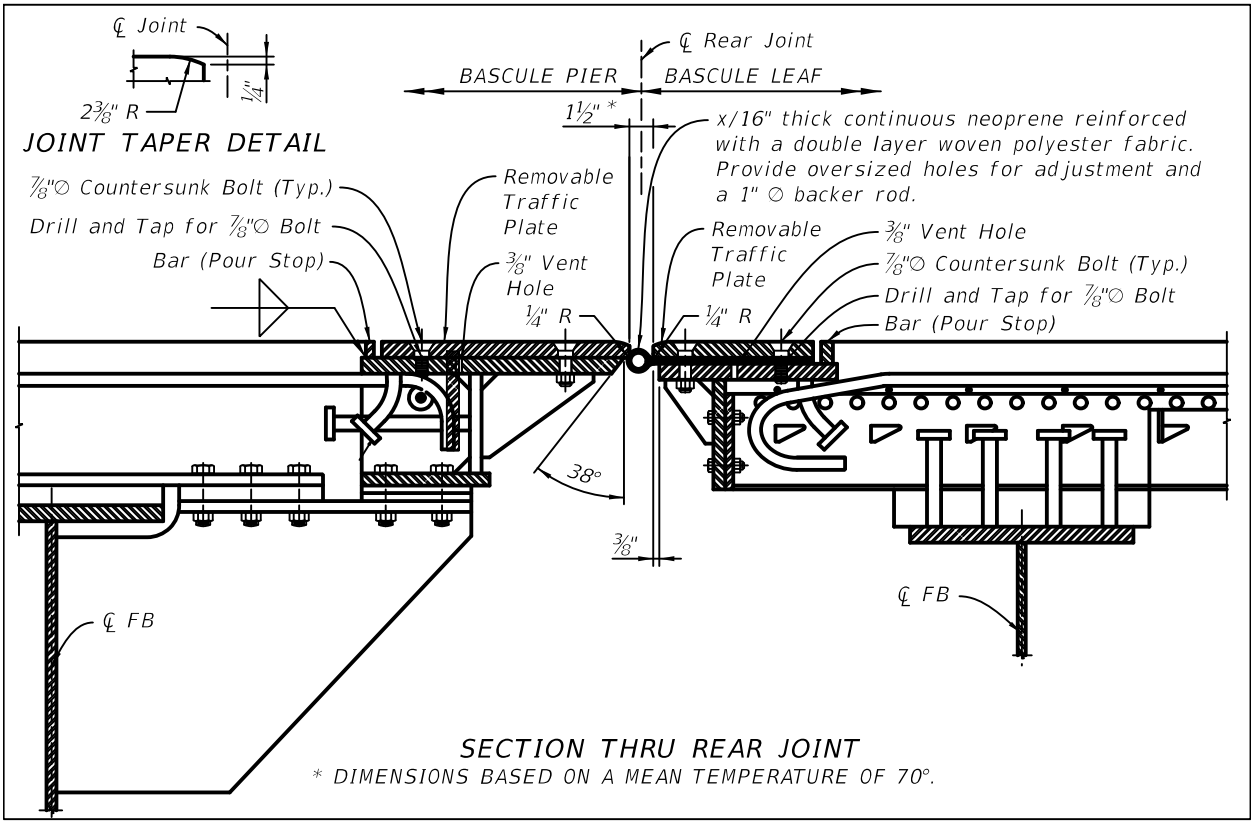

Figure 21.13.1-2 Bascule Leaf Forward Joint and Longitudinal Joint

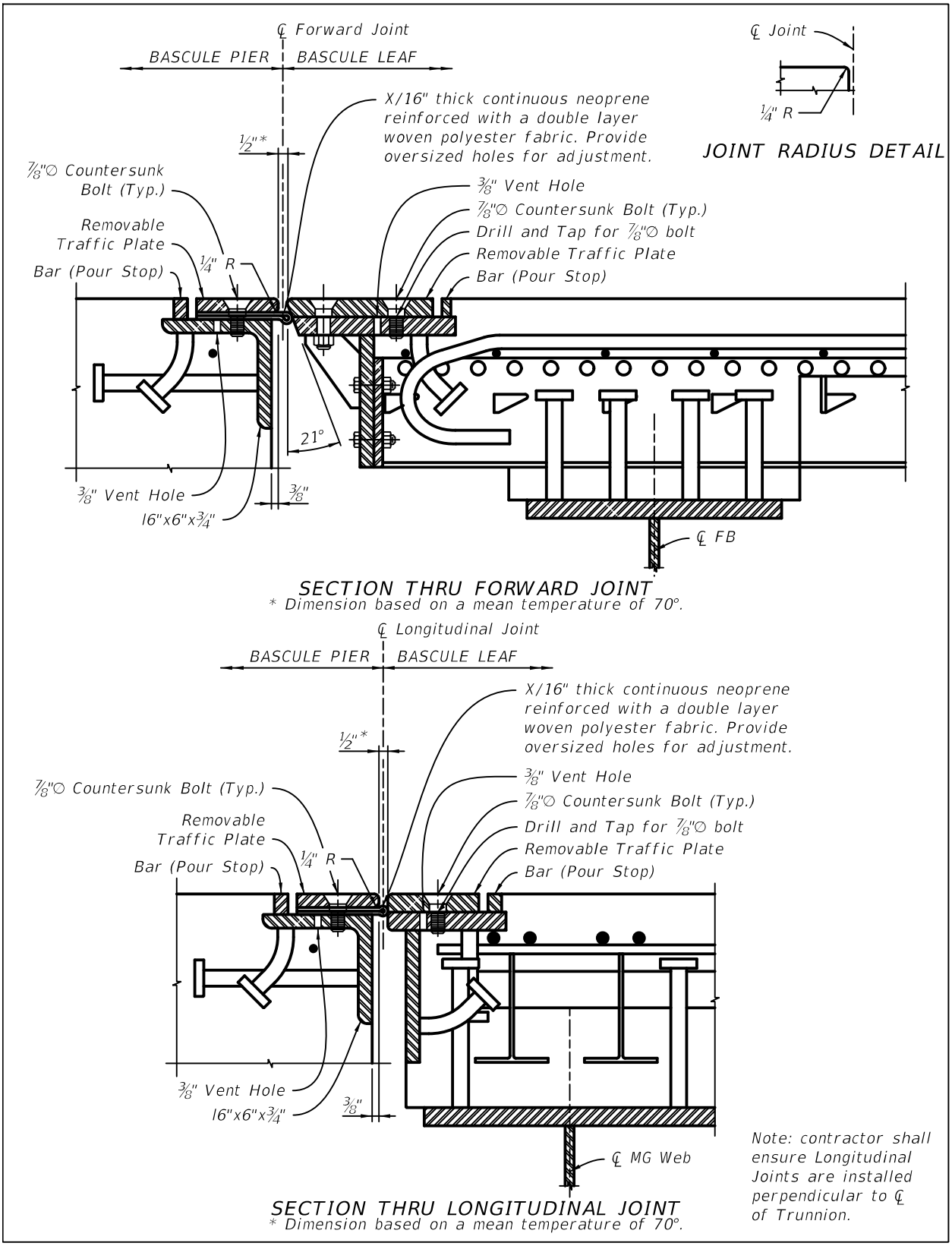

21.14 Bascule Bridge Plan Submittal Requirements

21.14.1 List of Required Drawings

A. Mechanical:

1. General Notes applicable to Mechanical Plans.
2. Equipment Schedule.
   a. Span Drive Machinery
   b. Trunnion Assembly
   c. Span Lock Machinery
   d. Span Lock Hydraulic Machinery
   e. Hydraulic Drive Equipment
   f. Hydraulic Line Schedule - Drive Hydraulics
   g. Hydraulic Line Schedule - Span Lock Hydraulics
3. Leaf Balance: Indicate Bascule Leaf Balance requirements as WLcos(alpha) and angle alpha, with a tolerance range. (show in Structural Drawings)
4. Span Jacking Provisions (show in Structural Drawings): Include future jacking arrangements, locations, supports and estimated loads for bascule leafs.
5. Drive Machinery: Show Drive Machinery layout in Plan, Elevation and Section views to fully detail, position, orient, and align the machinery in reference to trunnion centerlines. Show extent of concrete both in elevation and plan. Do not show machinery guards, but indicate the requirement in Notes. Verify 30" service clearance around drive system components.
6. Machinery Supports: Show nominal dimensions, tolerances, flatness, perpendicularity, parallelism and finishes. Provide holes for proper air circulation, drains for trapped water, clips of proper size at corners of stiffeners, and edge clearances for stiffeners. Designate all welds, and call out testing requirements for welds. Locate all bolt holes based on footprint of machinery. Verify edge distances for all bolts. Add Notes to require vent holes for grout, leveling screws. Design and locate anchor bolts to allow space, especially headroom for hydraulic tensioning.
7. Trunnion Assembly: Detail assembly including girder, hubs, rings, dowels, bearings, shims, bearing supports, grout and concrete support columns. Design a thrust surface for bushing on the trunnion shoulder, and provide thermal allowances at thrust interfaces. Size the length of trunnion to extend 1/2" beyond the face of bushing.
8. Open Gearing: Specify and detail, if profile modifications are employed. State the AGMA accuracy grade, if different from Specs.

9. Racks: Show in assembly view with trunnion and girder section. Detail rack (with rim and support) as a weldment bolted to the bottom of the girder. Designate all welds and specify extent of weld testing required. Detail shims, and add notes if needed. Add note to caution against tolerance stacking in case of bolt holes. Tabulate gear parameters to correspond with pinion.
10. Pinions: Fully specify pinion (tabulate requirements) in correspondence with the rack. Fully specify keys and keyways.
11. Speed Reducers: Detail technical requirements in tabular form with exact ratios. Specify exact ratios to two significant digits. Show footprint based on actual dimensions obtained from selected models. Size and locate mounting bolts and show edge distances. Provide clearances for bolt tensioning. Coordinate with support bases.
12. Brakes: Indicate recommended and maximum brake setting torques values for motor/machinery brakes. Call out factory setting of brakes. Design for AISE/ NEMA dimensions, to facilitate equal replacements.
13. Bearings: Detail bushing grooves, locations and fittings. Indicate dowel pins, or recess base into cap for pillow block. Detail and specify anti-friction bearings; list technical requirements.
14. Drive Hydraulic Cylinders: Show mounting arrangements in reference to trunnion and bearing centerlines along x, y, z axes. Show clevises and all parts with section of girder. Show anchor bolt assemblies to anchor the clevis bases to the machinery platform. Show alignment requirements. Profile the locus of clevis pin centerline. Show mounting position of manifolds. List or show all technical specifications for cylinders, including cushioning.
15. Hydraulic System Layout/Piping: Show the Hydraulic Power Units and all accessories including piping layout and control panels. Add Notes on reservoir specifics, not covered by Specifications. Indicate maximum flow required for full speed operation; the pressure compensator setting to fully compensate the pump at the specified working setting. Indicate initial settings for adjustable counterbalance valves. Show and specify secondary containment for hydraulic fluid.
16. Cylinder Support Assemblies: Detail clevis assembly and its components individually, including spherical bearings and shims. Show and specify fits, finishes and tolerances. Specify material, detail welding and testing requirements.
17. Hydraulic System: Include technical specifications for each component of the hydraulic system starting with the pump following along the pressure line through the cylinder, returning to the pump. Indicate the settings for various components as applicable.
18. Live Load Shoes: Show live load shoe assemblies with leaf in closed position, including all structural interfaces for proper alignment and orientation. Show and specify shims and non-shrink epoxy grout. Indicate material, installation notes and anchor bolt details. When Rear Live Load Shoe Assemblies are provided, indicate the gap between live load shoe and strike plate to which the shoes are to be aligned and shimmed.

19. Centering Devices: For accurate positioning and orientation of centering devices, show on Structural drawings as an assembly. Show and detail supports for all components, mounting arrangement, and interfaces. Specify material, and show finishes, clearances and length of engagement at mean structure temperature of 70°F.
20. Span Lock Assemblies: Show and specify materials and products, including hydraulic system components. For weldments, designate all welds and specify extent of weld testing required. Indicate mounting arrangement of cylinders, and specify cylinders in detail. Specify adjustable pressure relief valves and settings, configured for the mounting arrangement. Indicate clearances for the lock bar within the guides and receivers, and the bar and cylinder alignment criteria. Specify Hand pump (relief valve, 4-way vales, hoses and disconnects) in Plans to show one male and one female disconnects at the hose ends, with corresponding interfaces at the connections to the cylinders. Add notes to indicate alignment tolerances for bars and cylinders. Show hydraulic schematic with component reference numbers. Show location and mounting arrangement for span lock limit switch assemblies, specified in detail, and paid for under Section 508.

B. Electrical:

1. Control Tower - Control Console and Operator's Visualization Geometry Analysis Including CCTV Locations.
2. General notes applicable to Electrical Plans.
3. Electrical site plan showing traffic lights, traffic gates, traffic railings, incoming service, service connection point, phone number of local electric utility and phone companies.
4. Conduit riser diagram complete with conduit and cable schedule.
5. Single line diagram.
6. Symbol legend.
7. Lighting and equipment plan. Including, lighting panel schedule, fire detection system, and control tower lighting.
8. Lightning protection, bonding, and grounding plan.
9. Navigation lighting plan.
10. Communication equipment plan.
11. Control panel details.
12. Control console details.
13. Block diagram of operating sequence.
14. Schematic diagrams for traffic lights, traffic gates, span locks, safety interlocks, leaf drives, navigation lights, etc.
15. Control system I/O points.
16. Ladder logic for PLC.
17. Submarine cable/submarine cable termination cabinet details.

18. Fire and security panel schematic diagram.
19. CCTV system plan and elevation.
20. Limit switch development.
21. Electrical equipment layout - Including but not limited to generators, motors, control console, control panels, motor control center.

C. Architectural:

1. Building: Include a floor plan of each floor, egress plan, exterior and interior elevations, representative building sections, wall sections and details, schedules for finishes and equipment, type and class of construction, large scale drawings of special conditions, reflected ceiling plans, door and window schedules, safety equipment, description of materials, color schemes and schedules, and other information necessary to explain the design.
2. Structural: Include floor plans showing framing plan, column sizes, structural walls, stairs, and special conditions; structural building sections showing size and relationships between columns, beams, and other structural components; structural details and schedules; limiting load capacities; design loads for wind, seismic, live and dead loading; reinforcing bar schedule (where applicable), and other data required to fully explain the structural system.
3. Heating, Ventilation, Air Conditioning (HVAC): Provide plans showing equipment and duct work horizontal layout; building sections showing vertical location and relationship of equipment and duct work with building structure; provide design criteria for all systems; indicate type of control system; delineate control zones; describe all aspects of the various components of all systems; design calculations.
4. Plumbing: Provide plans showing drinking water distribution and waste water collection systems; provide preliminary layout of systems including elevations and line sizes; plans showing horizontal and vertical services with sizes; fixtures and equipment; water pressure and volume requirements; additional details and information necessary to fully describe the complete systems.
5. Electrical: Indicate schematics showing lighting, power, equipment, special equipment; location of all switches, lighting fixtures, and receptacles; show all circuits with number, size, and type of conductors; provide for protective devices, and emergency systems; provide for low voltage communication system, and other electrical system requirements. These schematics are part of the Electrical plans.
6. Communications, Electronics, Instrumentation: Provide systems schematics and information for proposed intercom, telephone, public address, radio communications, CCTV, computers, electronic communications, protective alarm. Indicate equipment and instrumentation arrangement and space requirements including racks, consoles, and mountings; wiring and cable requirements; power and lighting requirements including emergency and standby requirements; fire detection system; and air conditioning. These schematics are part of the Electrical plans.
7. Special Equipment: Show location and type of special equipment, if any, on plans.

21.14.2 Progress Submittals Schedule and Content

A. Mechanical:

1. 30%:
   a. Preliminary Plans and Calculations.
   b. Submit updated Cost Estimates & Scope of Work Minutes and Comments based on the Bridge Development Report (BDR). If no BDR, include the initial cost and scope data.
   c. A preliminary Key Sheet including the project title and a location map in the center of this sheet and an index of drawings date with a key as to status. Include proper job numbers, bridge numbers, and WPI numbers. If a piece of information is not available include the title and show N/A.
   d. General Notes Sheets: Outline of Plan Development Criteria. The basic decision to include information on the drawings in lieu of in the technical specifications is based on applicability. In the Technical Special Provisions, include information that does not change much from bridge to bridge. In the drawings, include information that is particular to the specific bridge.
   e. Plan and Elevation Sheet: A machinery layout and arrangement drawing must be shown both in plan and elevation. Sections may be necessary to clearly show the design. The 30% submittal may include only preliminary sketches, but the intent of the design will be shown.
   f. Substructure and Superstructure and Roadway Approach Interface Details. To ensure adequate control, develop these details sufficiently to define the design. Include all critical criteria in the 30% submittal.
   g. Design Submittal Checklist: At the first submittal, in order to keep proper control of the approval process, develop and submit a checklist of what packages will be submitted and when they are scheduled to be forwarded for review. Update the checklist as necessary. Include the revision of the submittal sheets on this list to ensure the latest documents are used. Once a drawing or technical specification section has been issued as a submittal, identify all later changes with a revision statement, designation and date. These statements are not part of the final design package but are essential during the initial submittals to identify what is happening and establish a design history.
2. 60%:
   a. The design and calculations at this phase must be 90% complete and the drawings 70% complete. Identify all known problems and corrective action initiated and well underway. Include resolution, to the maximum extent possible, to all comments from the 30% design phase submittal.
   b. Submit a listing of all anticipated Technical Special Provisions Sections that will be used.
   c. Develop the Trns*port sheet information and resolve any problems.

3. 90%:
   a. All Drawings, Calculations and Technical Special Provisions Sections must be completed. Any action on the 90% plans and special provisions should be minor corrections only. If the changes are significant, resubmit as a 90% package.
   b. All comments from the 60% plans phase and any previous comments, not completed, must be resolved.
   c. Input all Trns*port information into the Department's computer.
4. 100%:

   This submittal is to be complete and ready for bids. Verification that the required changes have been incorporated and review of the final signing and sealing are the only actions that need to be taken by the Department. This is not the time to be cleaning up the last 20% of the design.

B. Electrical:
1. 30%:
   a. List of specifications to use.
   b. Single line diagram including service voltage.
   c. Plan view showing major electrical equipment layout and location of service.
   d. Plan view showing submarine cable routing.
   e. List of all proposed electrical drawings.
2. 60%:
   a. List of changes from last submittal. All comments from the 30% plans phase and any previous comments, not completed, must resolved.
   b. Draft of specifications.
   c. Electrical calculations, i.e., generator size, service voltage drop, short circuit, service size, Automatic Transfer Switch, major electrical equipment voltage drop calculations, etc.
   d. Single line diagram showing equipment sizes and utility company.
   e. Conduit and wire sizes for major electrical equipment.
   f. Panelboard schedules.
   g. Light fixture legends.
   h. All drawings with sufficient detail to show intent of design.
   i. Preliminary Trns*port
   j. Utility coordination letter.
   k. Major electrical equipment layout indicating clearances around the equipment, and location of the disconnect switches.

3. 90%:
   a. List of changes from last submittal.
   b. All comments from the 60% plans phase and any previous comments, not completed, must be resolved. Any action on the 90% plans and special provisions should be minor corrections only. If the changes are significant, resubmit as a 90% package.
   c. Final version of specifications.
   d. All final calculations.
   e. All completed drawings, including Trns*port
4. 100%:

   All documents with all corrections incorporated and ready for bid.

C. Architectural:

1. 30%:
   a. List of specifications to use.
   b. Preliminary floor plans.
2. 60%:
   a. List of changes from last submittal.
   b. Draft of specifications.
   c. All drawings with sufficient detail to show intent of design.
3. 90%:
   a. List of changes from last submittal.
   b. All comments from the 60% plans phase and any previous comments, not completed, must be resolved. Any action on the 90% plans and special provisions should be minor corrections only. If the changes are significant, resubmit as a 90% package.
   c. Final version of specifications.
   d. All final calculations, including HVAC calculations.
   e. All completed drawings, including Trns*port
4. 100%:

   All documents with all corrections incorporated and ready for bid.

D. See also ***PPM*** Vol. 1, Chapter 26, Exhibit 26-E.

Modification for Non-Conventional Projects:
Delete ***SDM*** 21.14.2 and see the RFP and ***PPM*** Chapter 26 for submittal requirements.

22 DRAINAGE

22.1 General

A. This chapter addresses methods for conveyance of collected storm water within retained embankment and along bridge structures.

B. Drainage design within retained embankments and along bridge structures is the primary responsibility of the Drainage EOR. A coordinated effort between the Structures EOR and the Drainage EOR is required to properly incorporate the drainage design into the Plans set and the completed structure.

C. For drainage hydraulic design, including pipe sizing, inlet spacing and sizing, see the ***Drainage Manual***.

D. This chapter does not address the disposition of utilities attached to structures or within retained embankment. See the ***Utilities Accommodation Manual*** and ***SDG*** for additional guidance regarding utilities located on, and adjacent to, transportation structures.

E. Develop drainage details at the earliest stages of the design phase. See ***PPM*** Chapter 26 for Phase Submittal requirements.

Modification for Non-Conventional Projects:
Delete ***SDM*** 22.1.E and insert the following: E. Develop drainage details at the earliest stages of the design phase.

22.2 Deck Drains (Rev. 01/17)

A. Deck drainage can be accomplished by using deck drains cast into the bridge deck, by using scuppers (open deck drains) to discharge the storm water off of the bridge or a combination of both. It is preferable to avoid the use of deck drains of either type on a bridge structure via carrying stormwater off the structure in the gutterline. In situations where the use of deck drainage cannot be avoided design drainage systems as follows.

B. Determine the bridge drainage system based on considerations that include system maintenance, underlying area (e.g. traffic, infrastructure), and bridge surroundings (e.g. rural versus urbanized settings, adjacent properties). Coordinate with the District on the proposed drainage system.

Modification for Non-Conventional Projects:
Delete ***SDM*** 22.2.A and B and see the RFP for requirements.

C. Minimize the need for conveying storm water through piping on the bridge. Due to the inherent complexities and maintenance issues associated with bridge drainage piping, where permitted, design scuppers to convey drainage off the bridge directly or

use extended downspouts as required. Ensure that run-off will be carried away from substructure as well as underlying infrastructure. When 4 inch diameter scuppers are impractical, consider using large deck drains and ditch bottom inlets as shown in Figure 22.2-1 to avoid conveying storm water in piping attached to the bridge.

Figure 22.2-1 Large Deck Drain Detail

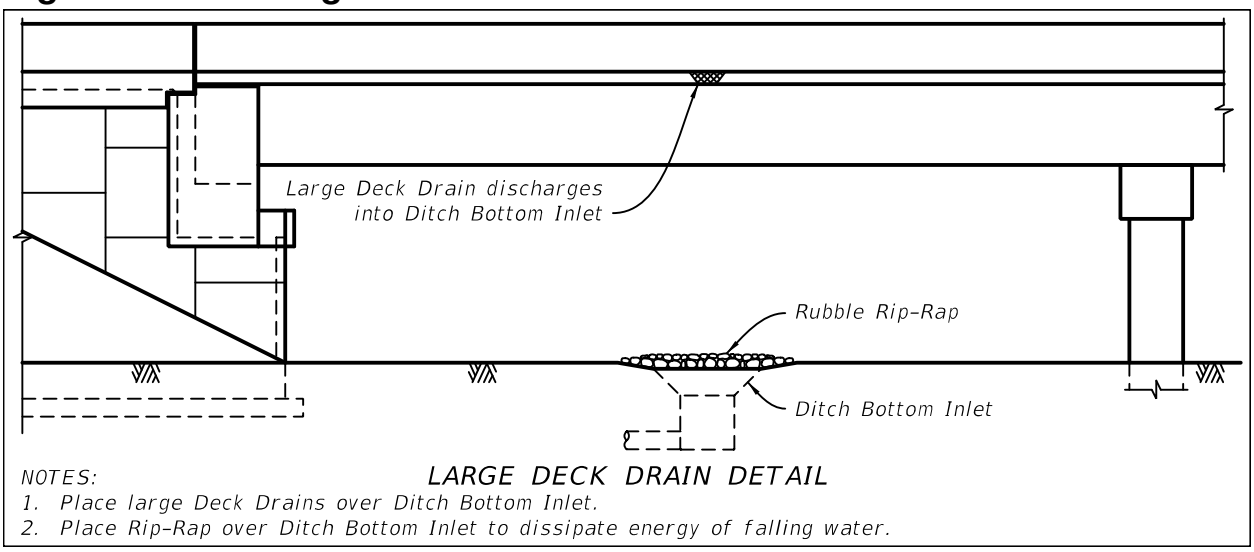

D. Detail simple open deck drain forms (e.g. 4-inch diameter scuppers) as shown in Figure 22.2-2. These details are available in the scupper details cell in the Structures Bar Menu.

Figure 22.2-2 Scupper Details

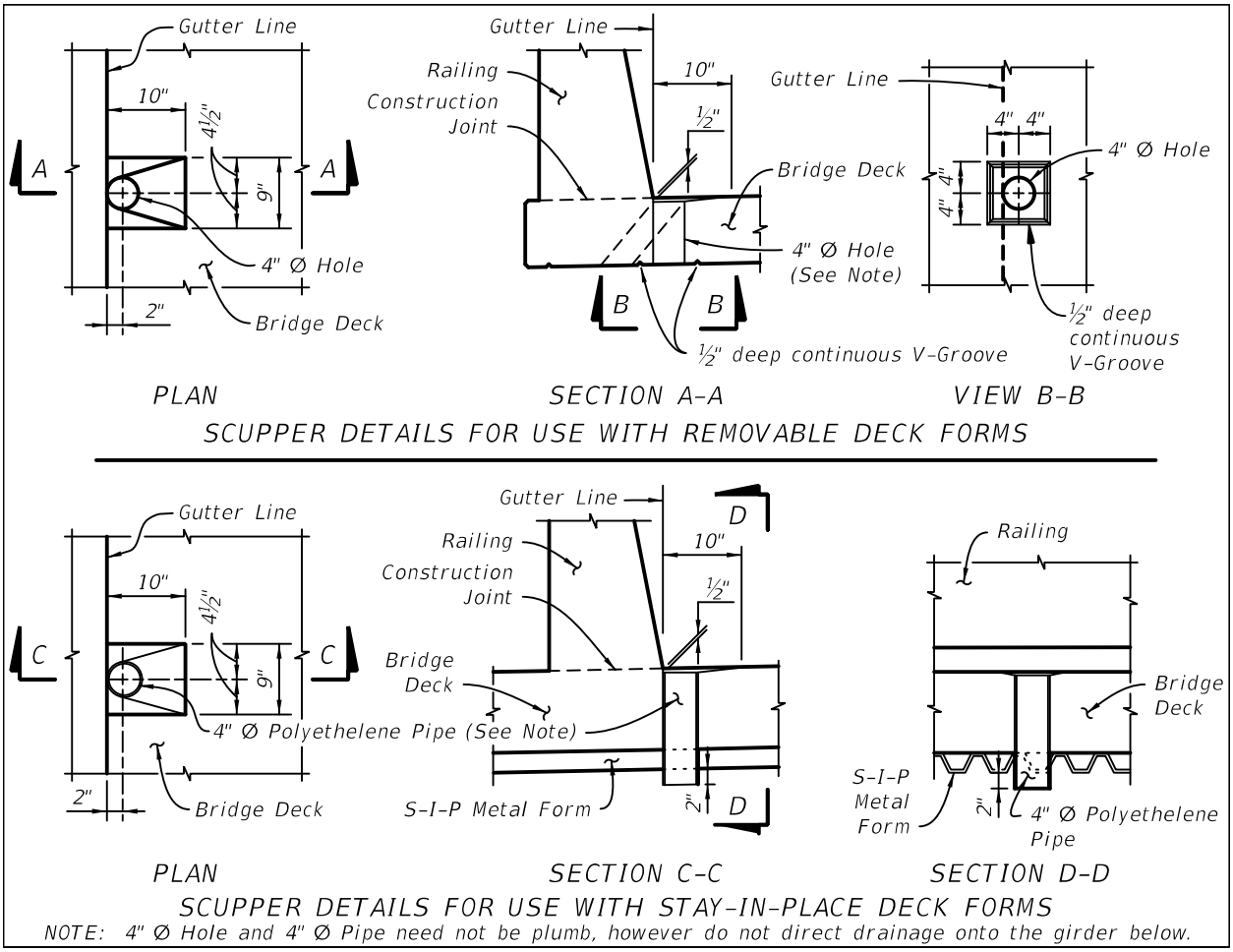

E. Scuppers must not discharge directly on the supporting beams or girders, unprotected substructure embankments at end bents, substructure embankments at end bents protected by slope pavement or sand cement riprap, lower roadways, sidewalks, railroads, or other areas (water or land) where not permitted. For steel girders, provide a closed conveyance system or scuppers with a downspout that extends below the bottom flange of the girder by 4 inches. See Figure 22.2-3. Downspouts shall conform to ***SDM*** 22.3.1. Use ADA compliant covers over scuppers located within sidewalks. Consult with Drainage EOR for recommended locations.

Figure 22.2-3 Downspout Details

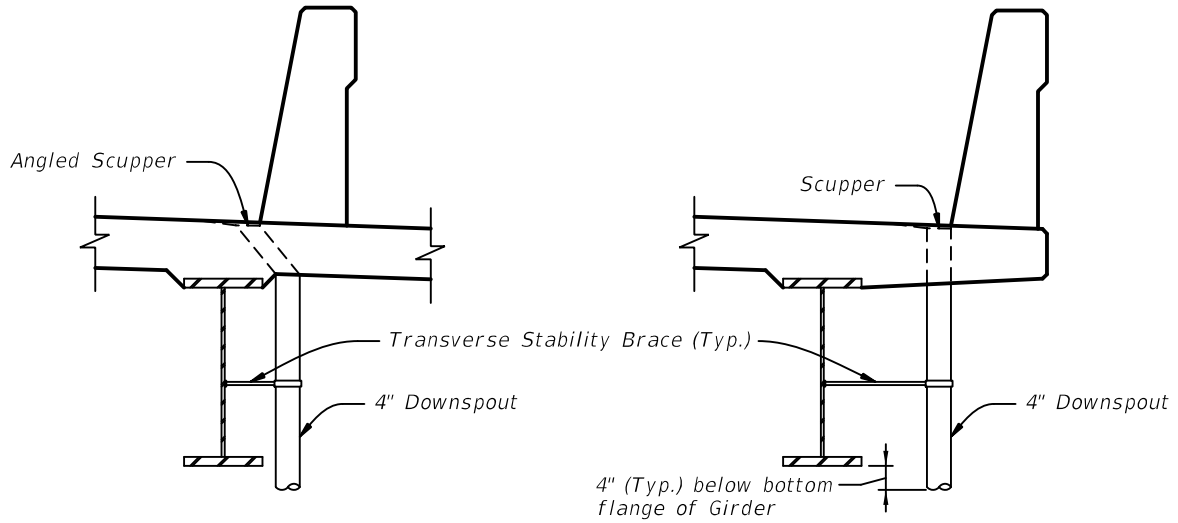

DOWNSPOUT DETAILS
(STEEL I-GIRDER SHOWN, BOX GIRDER SIMILAR)

F. Locate required deck drains near piers and, when practical, use a single drain sized to drain the entire design area. Thickened deck and additional reinforcement is required in the bridge deck at closed deck drain locations. Detail additional reinforcing around drains as required. The reinforcing requirement is dependent on the drain size and beam spacing. See Figure 22.2-4.

G. Provide a flexible or semi-rigid connection with the drain that accommodates differential movement between the superstructure and substructure. See Figure 22.3-1.

Figure 22.2-4 Large Deck Drain Detail

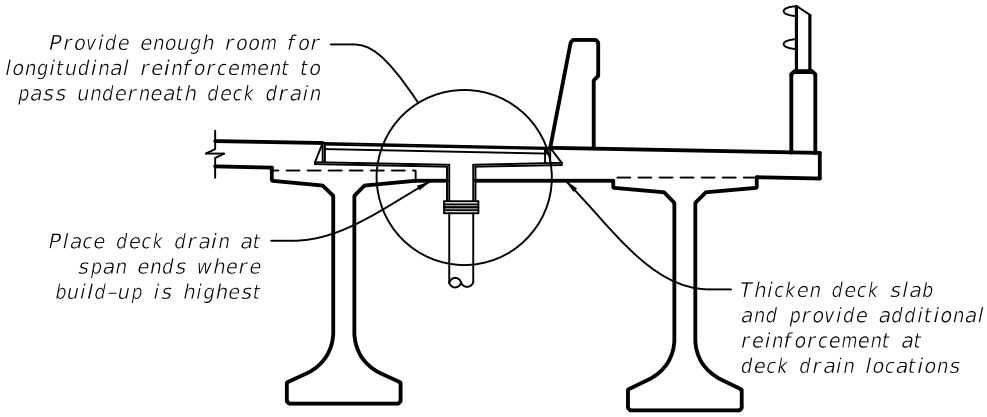

DECK DRAIN DETAIL

H. Detail the closed drain systems utilizing deck drains that are prefabricated steel drain boxes with anchor studs, hot dip galvanized after fabrication with removable grates, welded steel plates and bars with anchors. Design closed drains for wheel loads or pedestrians (ADA compliant) based on their locations on the bridge deck.

I. For other smaller deck drains without anchor studs and encased in concrete (not 4" diameter scuppers), specify gray cast iron, ductile cast iron or galvanized steel. Do not specify gray cast iron or ductile cast iron for use in Extremely Aggressive environments.

J. A note allowing specific alternate ferrous castings in lieu of prefabricated steel drain boxes may be included. Do not list proprietary names of items or vendor names.

22.3 Drain Conveyance (Rev. 01/17)

Deck drainage must be conveyed in a manner that takes into consideration function, maintenance and aesthetics. The expected movements of the structure (thermal, deflection, etc.) must be taken into account when designing drainage conveyance and attachments to the bridge and substructure. What follows are additional design considerations and plans content when designing storm drain conveyance:

A. Fully detail pipe hanger or other attachments to the structure in accordance with ***SDG*** 1.9. Use roller-type hangers for attaching pipes to bridges with non-conductive type rollers. Specify hot dip galvanized hangers for all attachments to the bridge structure where the superstructure environment has been classified as slightly or moderately aggressive. Specify 316 stainless steel hangers for all attachments to the bridge structure where the superstructure environment has been classified as extremely aggressive and other locations as directed by the District.

Modification for Non-Conventional Projects:
Delete ***SDM*** 22.3.A and insert the following: A. Fully detail pipe hanger or other attachments to the structure in accordance with ***SDG*** 1.9. Use roller-type hangers for attaching pipes to bridges with non-conductive type rollers. Unless otherwise shown in the RFP, specify hot dip galvanized hangers for all attachments to the bridge structure where the superstructure environment has been classified as slightly or moderately aggressive. Specify 316 stainless steel hangers for all attachments to the bridge structure where the superstructure environment has been classified as extremely aggressive.

B. Ensure that pipes encased in concrete do not conflict with reinforcing steel, post-tensioning ducts, anchor bolts or rods, etc. Maintain the same concrete cover for pipe as for reinforcing steel. For piping cast in pier columns and caps, show piping on pier reinforcing detail sheets and integrated drawings for post-tensioning. Use pier segment bump-outs to avoid post tensioning and highly congested pier diaphragms as required. See Figure 22.3-1 for typical conveyance details in piers.

C. For primarily vertical conveyances, the use of 8-inch diameter pipe is preferred and 6-inch diameter pipe is the minimum. Use 12-inch minimum diameter pipe for longitudinal conveyances and trunk lines. Do not specify bends greater than 45 degrees.

D. Show connections, cleanouts, elbows and all necessary components for a complete system. Show a minimum of one cleanout in each vertical conveyance or pier. Show a minimum of one cleanout every 100 feet in longitudinal conveyances and trunk lines. Show additional cleanouts as necessary for complex pipe configurations.

Figure 22.3-1 Pier Drainage Details

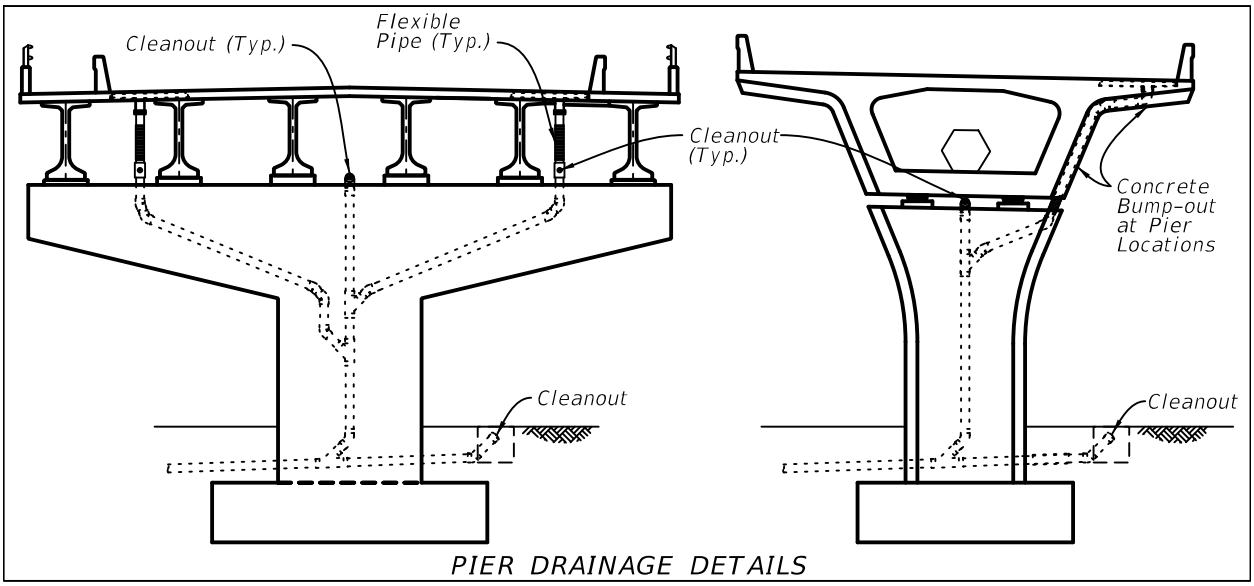

E. Underground laterals must be buried a minimum of 12". Place required cleanout as close as practical to the base of the structure.

F. Due to differential settlement issues between approach roadway embankment and End Bent, avoid running drain pipe through blockout in backwall. If running the pipe through the backwall is required, provide details that can accommodate settlement, bridge movements and construction tolerances.

G. Show pipes penetrating through diaphragms. For steel bridges ensure that pipes do not conflict with cross frames. For box girder bridges, locate pipes along the inside webs of the box, as practical, so as to maintain clear access along the center of box.

H. Longitudinal or vertical conveyance piping is not permitted inside post-tensioned U-Girders nor inside enclosed spaces, e.g. box beams, standard Florida-U beams, pretensioned U-Girders, hollow piers, etc., that cannot be directly inspected. Where possible, avoid placing longitudinal conveyance piping inside box-type superstructures regardless of inspectability, or in highly visible areas such as under deck cantilevers. When longitudinal conveyance piping must be placed inside box-type superstructures, locate deck drain inlets as close to pier locations as possible to minimize the length of piping inside the superstructure.

22.3.1 Drain Conveyance - Optional Materials (Rev. 01/17)

A. For drain conveyances encased in concrete, specify UV-resistant, Schedule 80, Polyvinyl Chloride (PVC) pipe, Fiberglass Reinforced Polymer pipe or ductile cast iron pipe in accordance with the Specifications. See Figure 22.3.1-1.

B. For drain conveyances not encased in concrete specify UV-resistant, Schedule 80 PVC pipe or Fiberglass Reinforced Polymer pipe in accordance with Specifications. See Figure 22.3.1-1. Do not specify ductile cast iron pipe in external applications.

C. Specify flexible pipe or transition couplings in accordance with the Specifications across expansion joints or between Superstructure and Substructure. See Figure 22.3.1-1.

D. Where pipes, transition couplings, hangers and/or miscellaneous hardware must be covered to meet project specific aesthetic requirements, design such covers and include complete details and material requirements in the plans.

E. Where pipes, transition couplings, hangers, covers, shrouds and/or miscellaneous hardware must be painted to meet project specific aesthetic requirements, prepare a Technical Special Provision to specify the appropriate material and construction requirements. Contact the State Materials Office for guidance and recommendations. Use the following finish colors for painting these items:

   1. When adjacent to concrete, specify the finish color to be Federal Color Standard No. 595c, Color No. 36622 or other appropriate project specific color number to match or complement the color of the concrete.
   2. When adjacent to painted structural steel, specify the appropriate Federal Color Standard No. 595c color number to match or complement the color of the steel.
   3. When adjacent to unpainted weathering steel, specify the finish color to be Federal Color Standard No. 595c, Color No. 30059.

   Do not use generic or brand names for colors, e.g. Pearl Grey.

F. For scuppers, any of the materials listed in Figure 22.3.1-1 are allowed if the pipe is removed after casting operations are complete. The allowable materials designated as acceptable for use in scuppers are suitable for permanent applications.

G. Refer to pipe manufacturer's specifications for maximum pipe hanger spacing. Refer to ***SDG*** 1.9 for attachment of the drainage conveyance system to the bridge.

Figure 22.3.1-1 Optional Materials Details

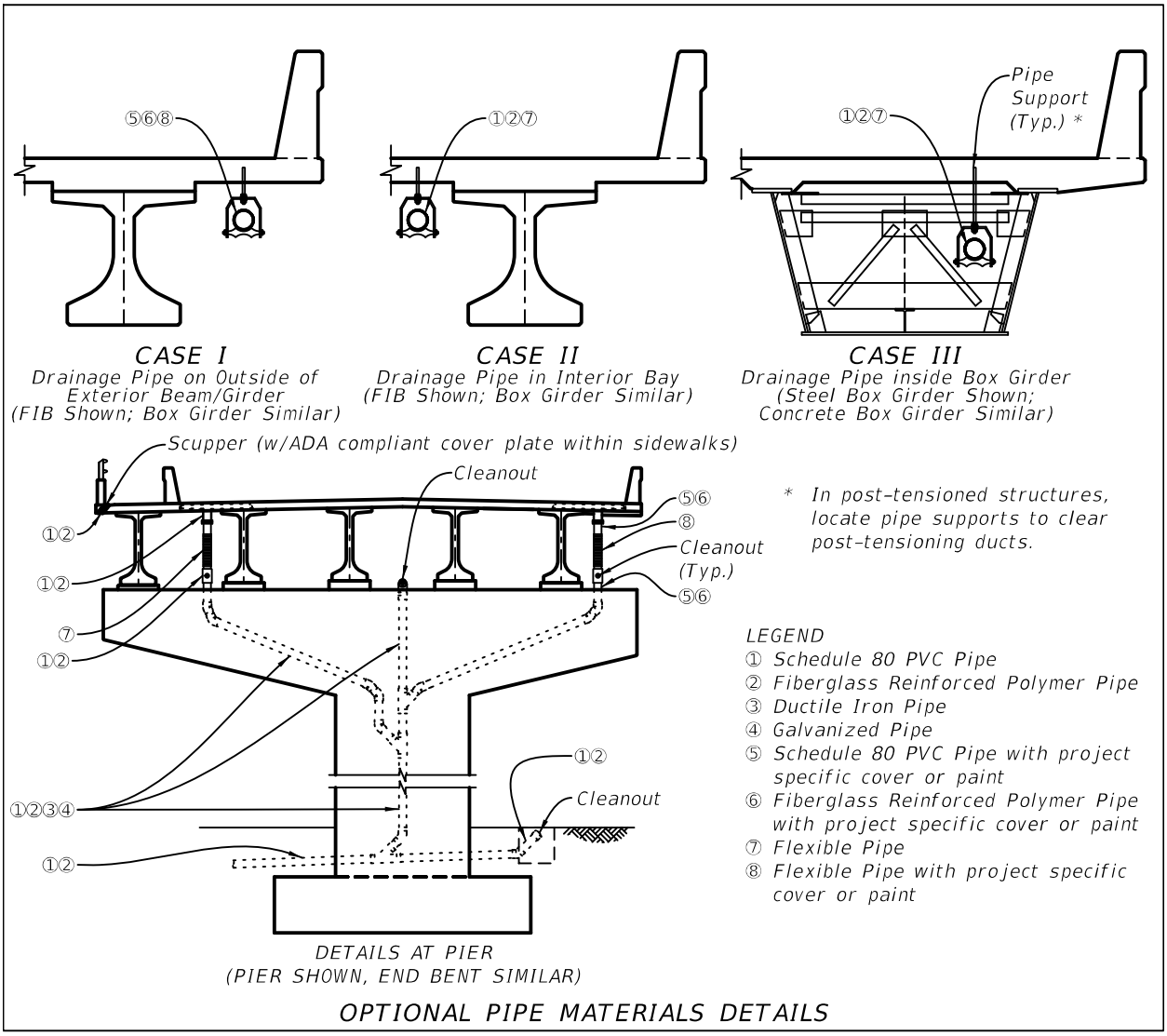

22.4 Drainage within and Adjacent to Retaining Walls

Conveying collected storm water through and immediately adjacent to retaining walls should be avoided whenever possible. Reasonable efforts should be made to allow water to flow off of the retained portion of the road and into inlets beyond wall or bridge limits. When collected storm water must be conveyed through and immediately adjacent to retaining walls, include full details in the Roadway and/or Structures Plans as appropriate in accordance with the design requirements of ***SDG*** 3.13. Also, see the ***Storm Drain Handbook.***

23 SPLICED GIRDER BRIDGES

23.1 General

A. Spliced Girder bridges are more complex to design and build than standard concrete girder bridges. They require a coordinated effort between designers and detailers in order to develop integrated plans that address all design, detailing and constructability issues. The information contained herein is only part of the requirements necessary to successfully accomplish this task. For additional requirements see ***SDG*** Chapter 4.

B. The sheets outlined in this chapter are only a partial list and do not constitute the total sheets required for a complete submittal. See also ***SDM*** Chapter 15 for additional required superstructure sheets. For examples illustrating the content and format of completed Spliced Girder sheets, see the ***Structures Detailing Manual Examples***.

23.2 Applications

A. Spliced girder bridges are bridges constructed from precast elements spliced together at the site into single girder lines to obtain the final structure. Girders are delivered pretensioned from the fabricator to the site and post-tensioned together.

B. Spliced girder bridges can be used for both simple span structures and continuous structures. These bridges should be used when additional span length is required and when full span concrete girders become too large to fabricate, transport, and/or erect.

C. Spliced Girders can be used for the following types of bridges:

1. Single Simple Spans - This bridge type is used where full length concrete girders cannot reach the site due to transportation or erection limitations. Multiple prestressed girder segments are supported by the abutments and temporary towers and are spliced together with closure pours and post-tensioning to form a single span.

2. Simple Spans made continuous for the deck dead load, live load, and superimposed dead loads - Full span simple span prestressed girders are spliced together at interior supports with closure pours and post-tensioned together to create a multi-span continuous unit. The construction of these bridges typically does not require the use of temporary towers.

3. Continuous Drop-In Spans - This is the most common type of spliced girder. Used for multiple span bridges and involves erecting Pier Girder Segments, End Girder Segments, and Drop-In Girder Segments on temporary towers and/or with strong backs. After casting closure pours, the prestressed girder segments are post-tensioned together to create a multi-span continuous unit. Pier Girder Segments may be haunched or constant depth depending on the span length. Three Span Units are typical for this type of construction but the construction can accommodate up to a Five Span Unit.

23.3 General Considerations

A. Minimize the number of different size and/or shape of precast elements to accommodate all structural and geometric demands of the project. Provide a design that accommodates all load demands, roadway section widths, span lengths, etc.

B. Size closure pours to accommodate post-tensioning duct couplers and diaphragm reinforcing.

C. Where possible, locate closure pours on continuous structures near the points of dead load contraflexure to minimize stresses at the closure pour. Coordinate locations of required temporary supports with the Traffic Control Plans.

D. Cast end diaphragms when intermediate diaphragms are cast or during deck casting operations. Check for crack control of diaphragms due to effects of elastic shortening during post-tensioning stressing operations.

E. Size blockouts in End Girder Segments to accommodate the stressing nose for tendon stressing. Detail end anchor reinforcing to avoid conflicts with stressing jacks.

F. If anchors are located at the face of the End Girder Segment, provide a construction sequence so all post-tensioning tendons are stressed prior to adjacent upstation and downstation span erection to accommodate tendon placement, jacks, and jacking operations. If anchors are located along the top of the End Girder Segment, adjacent upstation and downstation girder units may be placed before all tendons are stressed. Clearly indicate all restrictions in the plans.

G. Precast component weights: Consider the effect of precast component weight on hauling and erection equipment costs.

Commentary: The Contractor's equipment costs may be based on placing the heaviest precast component on the project.

23.4 Girder Segment Sheets

Include the following information as applicable:

A. Elevation View:

1. Elevation view of girder. Vertical scale may be exaggerated for clarity. Provide suitable matchlines for girders that require more than one sheet.
2. Overall casting length including additional length for elastic shortening, creep and shrinkage prior to application of post-tensioning and placement of girder on grade (as applicable).
3. Post tensioning ducts, duct profiles, duct sizes and corresponding tendon numbers. Duct profiles may be listed here or on a separate Duct Profile Sheet.
4. Reinforcing steel sizes, locations and spacings.
5. Sizes and locations of pre-formed holes in girder for diaphragm reinforcing steel and/or temporary bracing as required.

6. Locations of embedded reinforcing steel couplers/connections for diaphragm reinforcing steel.
7. End Block and anchorage blockouts for End Girder Segment only.
8. End Elevation Condition (Show Dimension "P" as shown on ***Design Standards*** Index 20010).

B. Cross Sections and End Views:

1. Cross sections or end views of girder segments showing typical section and variable sections including thickened web and/or thickened bottom flange as appropriate.
2. Overall dimensions and dimension strings.
3. Reinforcing steel sizes, locations and spacings.
4. Post tensioning ducts and sizes.
5. Strand pattern(s), debonding length(s), and stressing force of the prestressing strands. Prestressing strands shall be straight with no deviations.
6. Embedded Safety Sleeve or devices (see ***Design Standards*** Index 20010 Note 8 for details).
7. Sizes and locations of pre-formed holes in girder for diaphragm reinforcing steel and/or temporary bracing as required.
8. Sizes and locations of embedded reinforcing steel couplers/connections for diaphragm reinforcing steel.

C. End Block Detail (Generally End Girder Segment only):

1. Enlarged elevation and plan views.
2. Overall dimensions and dimension strings.
3. Reinforcing steel sizes, locations and spacings.
4. Post tensioning ducts and generic depictions of anchorages.
5. Blockout details.
6. Sections and views as required.

D. Lifting and Handling points and details.

E. Embedded Bearing Plates and locations with cross references to Bearing Detail sheets.

F. Reinforcing Bar Lists including Bar Mark, Number of Bars Required, Bar Bending Diagram and Bar Length for all bars. Provide a separate Reinforcing Bar List for each individual girder segment.

G. Other details as required.

23.5 Duct Profile Sheet(s) (if used)

Include the following information:

A. Duct profiles and corresponding tendon numbers on Elevation Views of each girder segment.

B. Dimensions from centerline of ducts to top or bottom of girder segment at 5'-0" (max) centers along length of girder. This information may be presented in tabular form or shown on the Elevation View of each girder segment.

23.6 Camber Diagram (Deflection and Build-Up)

Include the following information:

A. Girder Segment Placement Data. Show diagram of the placement of girder segments placed on temporary supports. Provide elevations at the bottom of the girder segment at temporary supports and bearings for each girder segment along each girder line.

Commentary: The relative elevations between field sections prior to the placement of the closure pours is critical in achieving the final geometry of the completed structure.

B. Elevation View of each unit with calculated deflections at major phases of construction. At a minimum, show anticipated cambers and deflections in tabular form for the following:

   1. Prior to deck pour.
   2. Immediately after deck pour.
   3. Due to each stage of post-tensioning.
   4. Due to removal of temporary supports.
   5. Due to composite dead load.
   6. Due to long term creep and shrinkage.

C. Cross sections for deck build up over girders as appropriate.

23.7 Miscellaneous Details (Rev. 01/17)

Include the following information as applicable:

A. Detail project specific temporary bracing based on the applicable portions of ***SDG*** 4.3.4 and include additional bracing types and/or details as required.

B. Show details of reinforcing for closure pours and diaphragms on the Superstructure sheets. Include closure pour and diaphragm reinforcing with the Superstructure Reinforcing Steel List.

C. Detail Anchorage locations as shown in Figures 23.7-1, 23.7-2, 23.7-3 and 23.7-4. Provide clearances at Non-stressing End Anchorage locations as shown in Figures 23.7-3 and 23.7-4.

Figure 23.7-1 Post-Tensioned Spliced Girder Details (1 of 4)

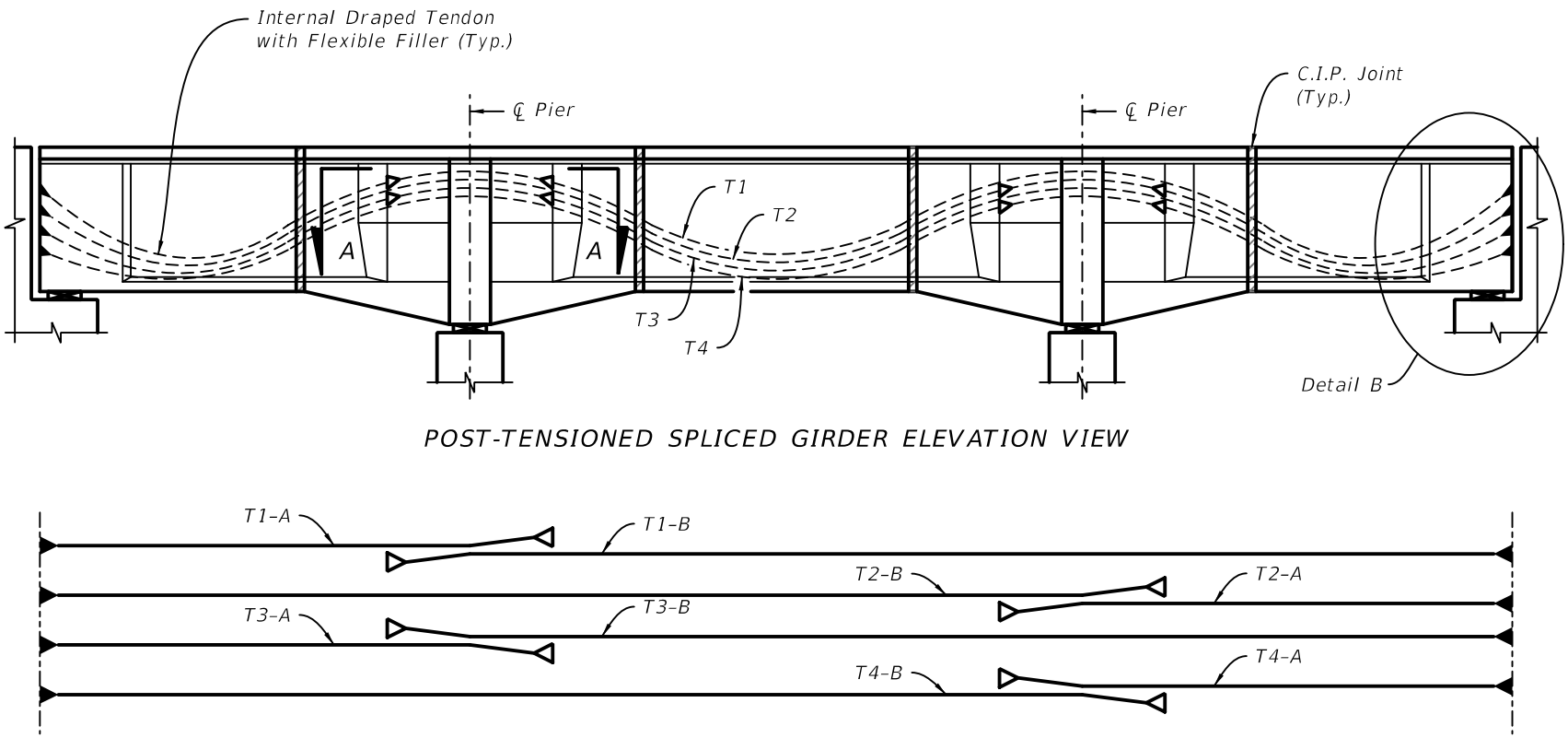

See Figure 23.7-2 for Section A-A.
See Figure 23.7-3 for Detail B adjacent to abutments.
See Figure 23.7-4 for Detail B adjacent to other structures.

Figure 23.7-2 Post-Tensioned Spliced Girder Details (2 of 4)

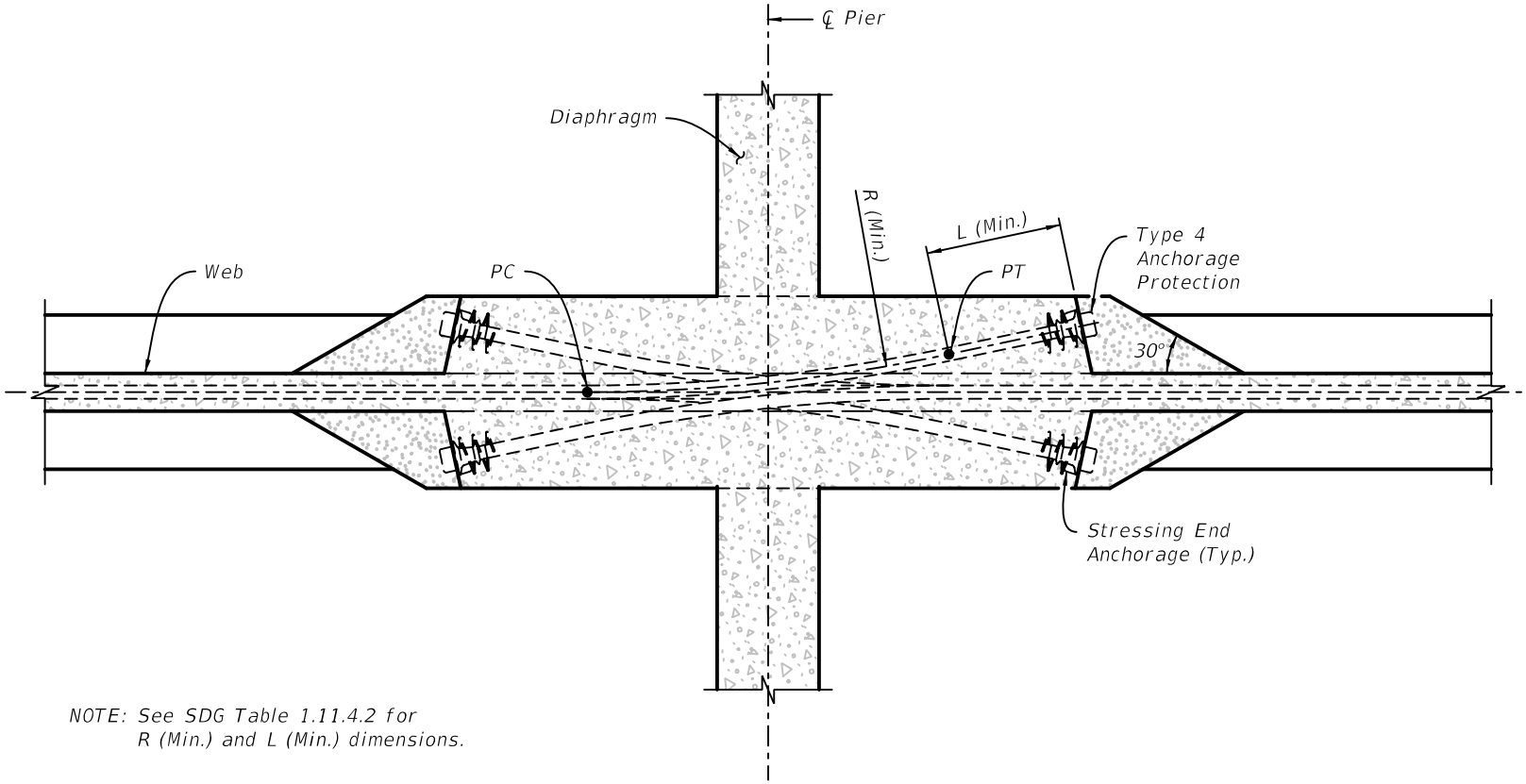

NOTE: See SDG Table 1.11.4.2 for
R (Min.) and L (Min.) dimensions.

SECTION A-A
(ANCHORAGE IN THICKENED WEB ALTERNATIVE)

Figure 23.7-3 Post-Tensioned Spliced Girder Details (3 of 4)

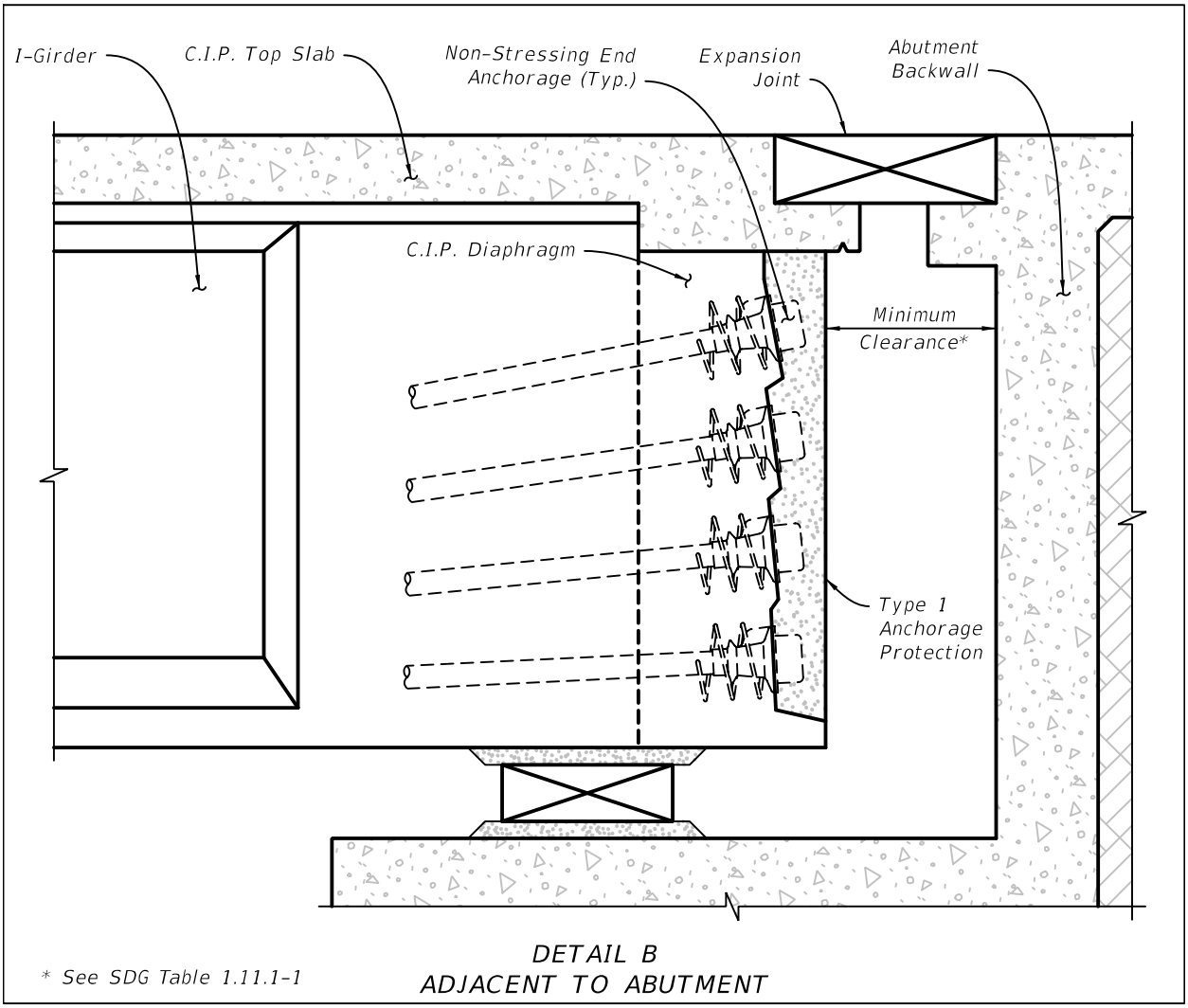

Figure 23.7-4 Post-Tensioned Spliced Girder Details (4 of 4)

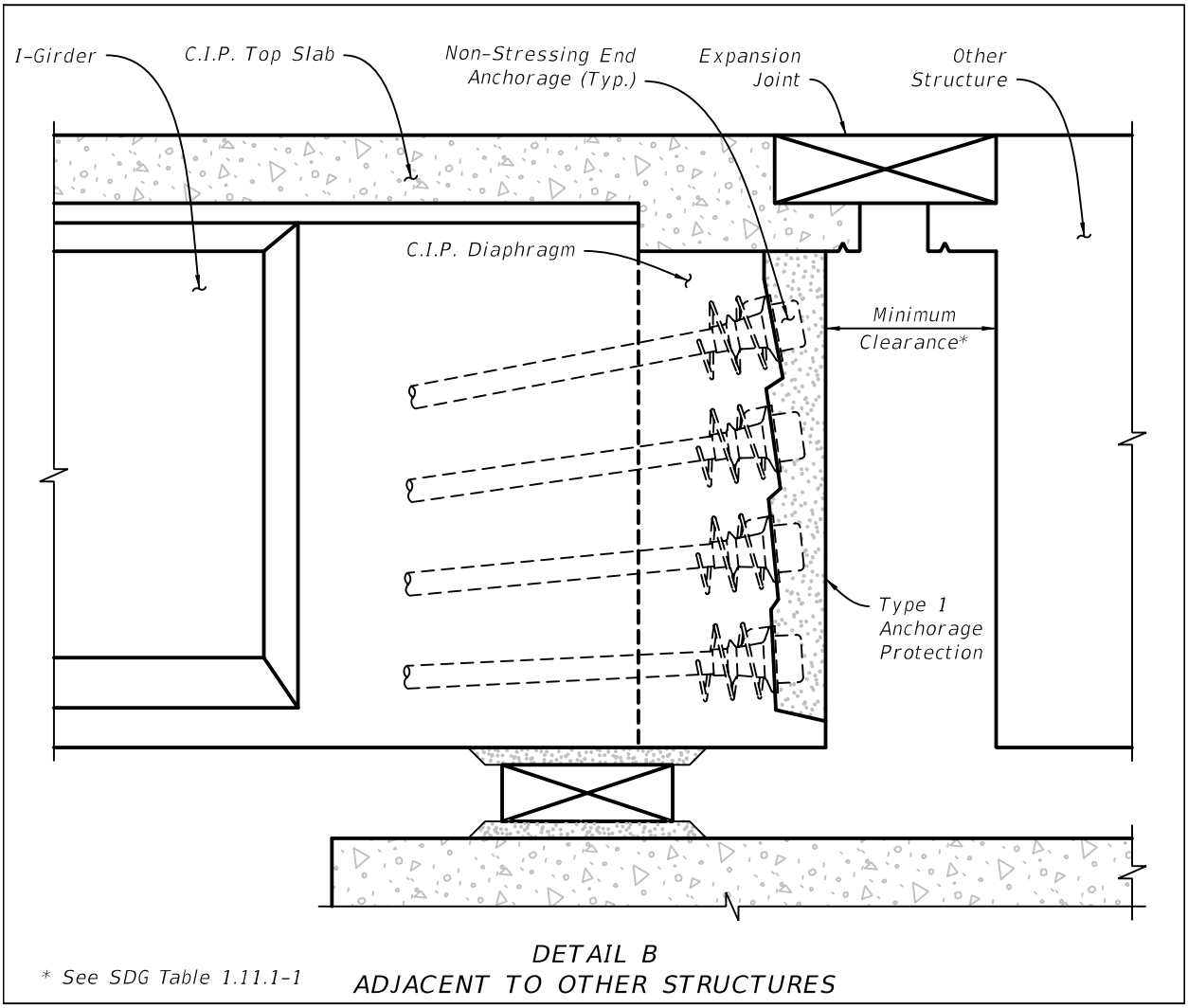

23.8 Construction Sequence

Provide a step by step construction sequence that includes the following:

A. Substructure construction.

B. Temporary support and strongback installation and removal (if applicable).

C. Girder segment placement sequence.

D. Reactions at each permanent and temporary support and strongback location for each construction phase and tendon stressing operation.

E. Tie down requirements and release sequence as required.

F. Placement and removal of longitudinal bearing locking devices at required locations (if applicable).

G. Closure pour and diaphragm construction sequence.

H. Post-tensioning tendon stressing sequence per beam.

I. Completed Post-Tensioning Tendon and Bar Data Tables (Per ***Design Standards*** Index 21803).

J. Post-tensioning tendon filler injection sequence.

K. Placement and removal of deck forms (if applicable).

L. Deck casting sequence including direction of casting.

M. Erection of adjacent approach spans (if present and if clearances for tendon installation and stressing are affected by presence of adjacent approach spans).

N. Construction of adjacent end bent back walls (if applicable and if clearances for tendon installation and stressing are affected by presence of back wall).

O. Notes to supplement the Specification requirements for providing girder stability during erection, e.g. installation of web clamps between adjacent girder segments, erection of cross frames as girders are placed, strongback positioning, etc.

24 FENDER SYSTEMS

24.1 GENERAL

A. Fender Systems are complex to design. They require a coordinated effort between the SDO, USCG, Contractors, EORs, and FRP Manufacturers in order to develop integrated plans that address all design, detailing and constructability issues. The information contained herein is only part of the requirements necessary to successfully accomplish this task. For additional requirements see ***SDG*** 3.14.

B. The details and notes presented in this chapter work with ***Specifications*** Sections 471, 510, 700 and 973 and ***Developmental Specification*** Dev932FRP. Include ***Developmental Specification*** Dev932FRP in the Specifications Package.

24.2 GENERAL NOTES

A. At a minimum, include the following General Notes for all Fender Systems:

1. Provide fender systems in accordance with Specifications Section 471.
2. Do not use the following materials for pile or wale members in the design of the fender system:

   Timber

   Concrete containing ferrous metal strands and reinforcing

   [List other material restrictions as determined by the District]
3. Use the following information to complete the fender system design meeting the Specifications and the requirements stated herein:

   Maximum Allowable Fender System Deflection (ft) = _____

   Required EAC (k-ft) = _____

   ½ of 100-yr Scour Elevation (ft) = _____

   [½ of 100-yr Scour Elevation = Existing ground elevation - (0.5 x predicted 100 year scour)]

   Channel Depth (ft) = _____

   MHW/NHW Elevation (ft) = _____

   MLW/NLW Elevation (ft) = _____
4. U.S. COAST GUARD NOTIFICATION: Notify the local office of the U.S. Coast Guard at least 30 days prior to beginning of construction of the Fender System.
5. [Coordinate pile type with the District. Include the following note or a project specific note as appropriate for another pile type and/or if pile splices will be permitted or required such as in an area directly under a bridge where limited headroom is available:]

   PILES: Provide Reinforced Thermoplastic Structural Shapes for piles in accordance with Specifications Section 973. Install all piles plumb and in accordance with manufacturer's recommendations. Pile splices are not allowed.

6. WALES: Provide Reinforced Thermoplastic Structural Shapes for wales in accordance with Specifications Section 973. Provide continuous wales with splices only at locations shown on the plans.

7. [Coordinate use of Catwalks and catwalk decking type with the District. If a catwalk is used, include one of the following sets of notes for the catwalk decking type as appropriate:]

   FRP DECKING FOR CATWALKS: Provide 2" x 12" (nominal) Thermoplastic Structural Shapes for decking for catwalks in accordance with Specifications Section 973. Install decking according to manufacturer's recommendations using stainless steel #10 x 3" (minimum) deck screws.

   [or]

   FRP OPEN GRATING FOR CATWALKS: Provide FRP Open Grating for catwalks. Provide a gray or black, heavy duty FRP Open Grating suitable for exterior installations. Provide grating with a maximum gap opening on the walkway surface of 1½". Design grating for the following two load conditions:

   - a 50 psf uniformly distributed live load, and a maximum deflection of ⅜" or L/120 at the center of a simple span.
   - a concentrated load of 250 pounds with a maximum deflection of ¼" at the center of a simple span.

   Install FRP Open Grating according to manufacturer's recommendations using stainless steel hardware, screws, bolts, nuts and washers. Attach FRP Open Grating to Wales and Deck Supports at a 2'-0" maximum spacing so as to resist pedestrian live loads and uplift forces from wind, buoyancy and wave action.

8. [Coordinate handrail type with the District. Include one of the following sets of notes or another project specific note for the handrail as appropriate:]

   FRP HANDRAILS: Provide Thermoplastic Structural Shapes for handrails in accordance with Specifications Section 973.

   [or]

   WIRE ROPE FOR HANDRAILS: Provide wire rope meeting one of the following requirements:

   - ½" diameter 6x19, 6x25 or 6x37 class IWRC Type 316 stainless steel wire rope with a minimum breaking strength of 18,000 lbs.
   - ½" diameter 6x19 galvanized wire rope with ultraviolet ray resistant polypropylene impregnation having an outside diameter of 5/8" with a minimum breaking strength of 22,000 lbs. Protect all ends with heat shrinkable end caps compatible with the rope's polypropylene that provide an effective water-tight seal.

9. CLEARANCE GAUGES AND LIGHTS Provide Clearance Gauges and Minimum Clearance Signs in accordance with Specifications Section 700 and that are a minimum of 0.08 inches thick. Include complete details of the Clearance Gauges,

Minimum Clearance Signs and their associated support/attachment systems in the Shop Drawings. Provide and install Clearance Gauge Lights in accordance with Specifications Section 510 and Design Standards Index No. 21220.

10. NAVIGATION LIGHTS: Provide and install Navigation Lights in accordance with Specifications Section 510, Design Standards Index No. 21220, and/or if appropriate, project specific details.

    [Include the following note if appropriate:]

    Provide and maintain Temporary Navigation Lights during construction until permanent Navigation Lights are operational.

11. BOLTS, THREADED BARS, NUTS, SCREWS AND WASHERS: Furnish stainless steel bolts in accordance with ASTM F593 Type 316. Furnish stainless steel Threaded Bars in accordance with ASTM A193 Grade B8M. Furnish stainless steel Nuts in accordance with ASTM F594 Type 316. Furnish stainless steel Screws in accordance with ASTM F593 Type 305. Furnish stainless steel Washers compatible with Bolts, Threaded Rods and Nuts under heads and nuts. Torque Nuts on 1" diameter Bolts and Threaded Bars to 150 lb-ft. Keep the threads on Bolts, Threaded Bars and Nuts free from dirt, coarse grime and sand to prevent galling and seizing during tightening. Recess hardware a minimum of ½" from front face of wales.

12. WALE SPLICE PLATES: Provide FRP or stainless steel wale splice plates. Stainless steel wale splice plates shall be in accordance with ASTM A240 Type 316. FRP wale splice plates shall be in accordance with Specifications Section 973.

B. For examples illustrating the content and format of a completed General Notes Sheet, see the ***Structures Detailing Manual Examples***.

24.3 SCHEMATIC PLAN VIEW SHEET

A. Provide a Schematic Plan View of the Fender System showing the treatment of the bridge with the channel as shown in Figures 24.3-1 and 24.3-2. Include the following:

1. Overall Fender System layout
2. Stations and offsets (left or right) to Bridge Station Line for each Begin Flare Control Point in tabular format
3. Centerline of Channel
4. Channel Width and dimensions from centerline of channel to the front face of each fender
5. Angle between Centerline of Channel and Bridge Station Line, i.e., the Base Line, Centerline Construction, etc. (Note: This angle is not necessarily the same as the bridge skew angle.)
6. Station along Bridge Station Line at its intersection with the Centerline of Channel
7. Direction of Stationing along Bridge Station Line

8. Coping lines of new bridge(s), and if applicable, of existing bridge(s)
9. Outline of adjacent piers, footings or bents
10. Navigation Light type, color and locations per Design Standards Index 21220
11. Lighted Clearance Gauge locations
12. North arrow
13. Existing fender system to remain or be removed (if applicable)

Figure 24.3-1 Schematic of Fender System Showing Treatment of Single or Dual Fixed Bridge with Non-Skewed Channel

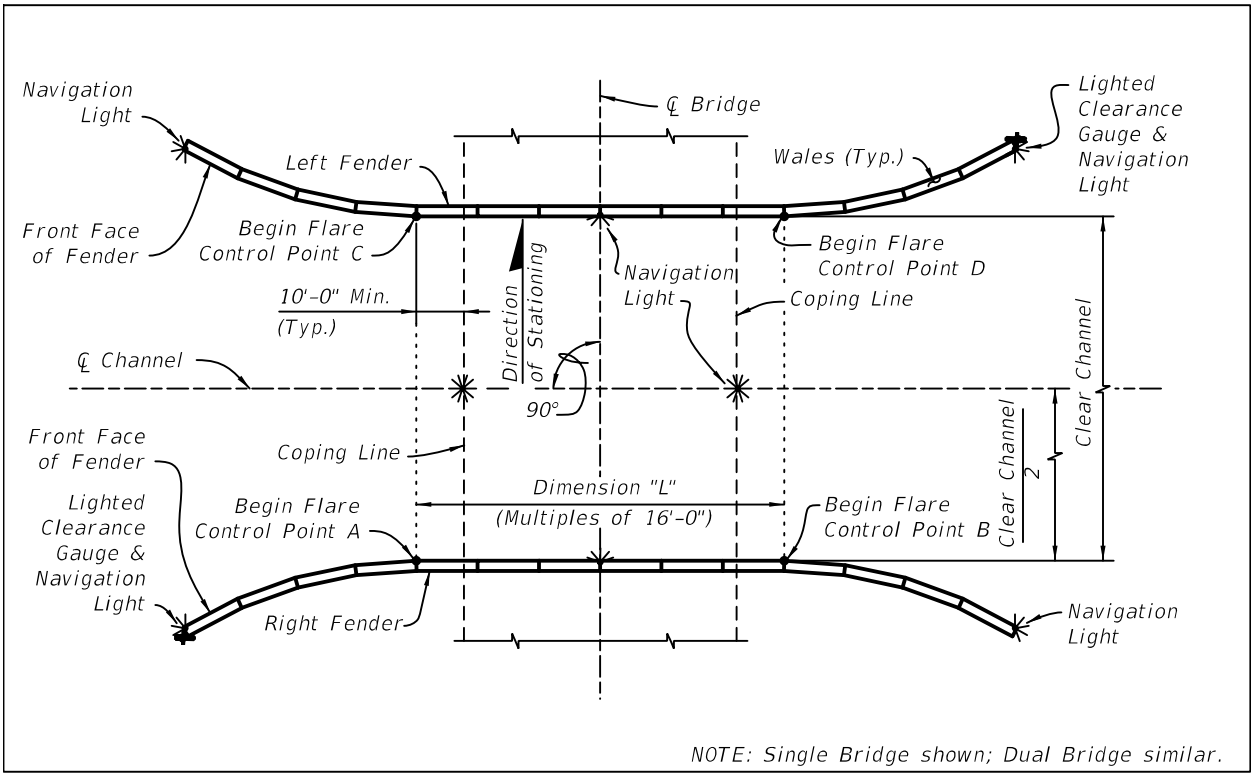

Figure 24.3-2 Schematic of Fender System Showing Treatment of Single or Dual Fixed Bridge with Skewed Channel

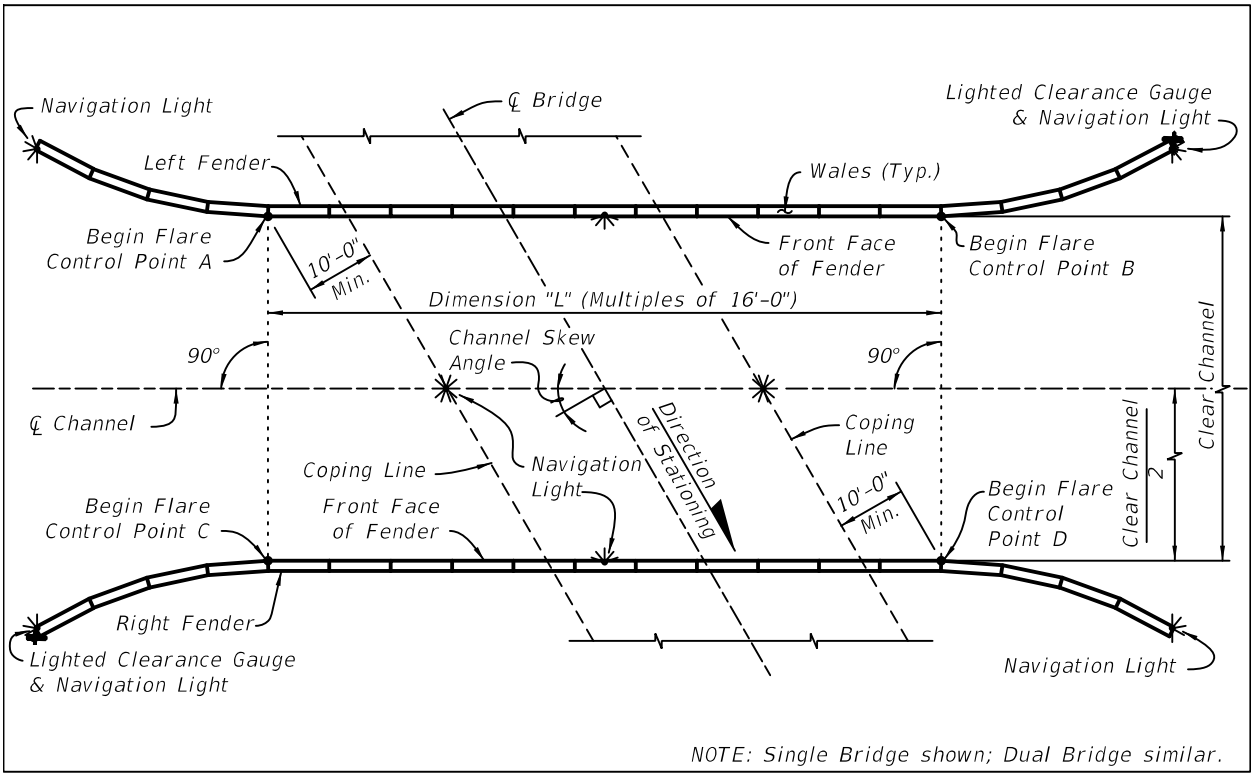

B. For examples illustrating the content and format of a Schematic Plan, see the ***Structures Detailing Manual Examples***

24.4 PARTIAL SCHEMATIC PLAN VIEW SHEET

Provide a Partial Schematic Plan View of the Fender System showing the detailed dimensions and angle breaks along the front faces of the fenders within the flared sections as shown in Figure 24.4-1. This information may be included on the Schematic Plan View as appropriate if space permits. For an example illustrating the content and format of the Partial Schematic Plan Sheet, see the ***Structures Detailing Manual Examples***.

Figure 24.4-1 Partial Schematic Plan View of Fender System Flared Section

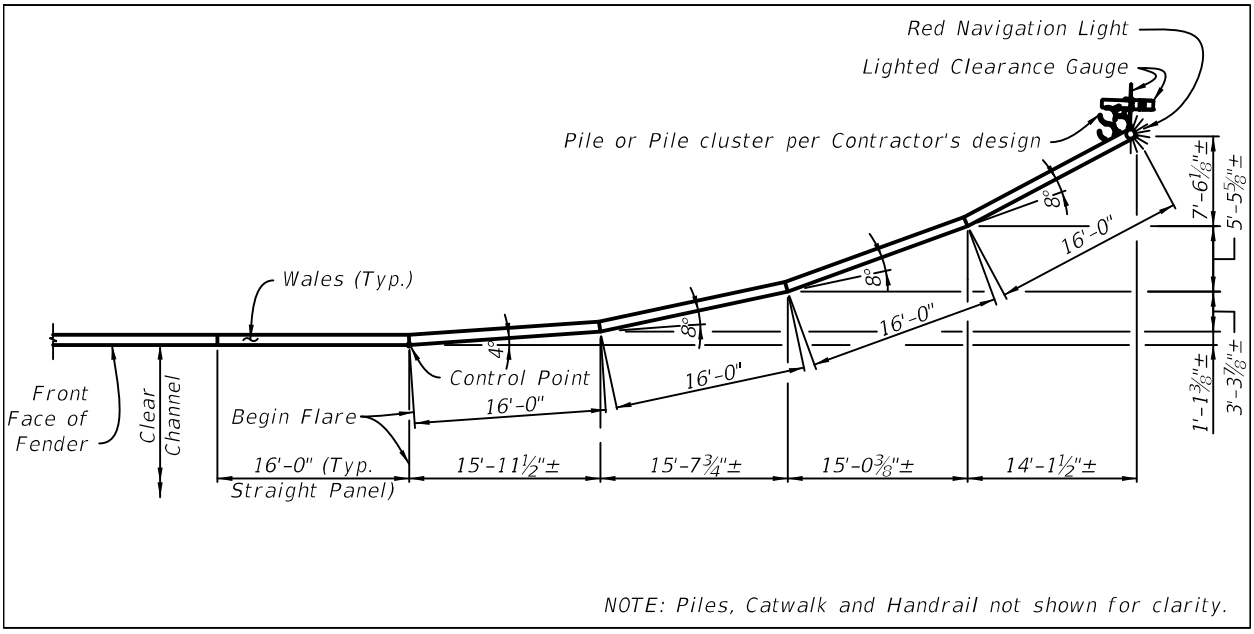

24.5 FENDER SYSTEM DETAIL SHEETS

Include the following supplemental designs, details and information in the Plans:

A. Details of, and electrical service for, Navigation Lights and Clearance Gauge Lights including conduit path from bridge to fender system and identification of service point. Coordinate design with ***Design Standards*** Index 21220 and ***Specifications*** Section 510.

B. Schematic details of Catwalk along top of Fender System (if required by the District)

C. Schematic details of Handrail along back of Catwalk (if required by the District)

D. Schematic details of Access Ladders and Catwalks from bridge to Fender System (if required by the District)

24.6 CLEARANCE GAUGE DETAIL SHEET(S)

Provide details for Clearance Gauges and other associated details in the Plans as follows:

A. Contact the appropriate U.S. Coast Guard District Commander to obtain the "nominal day visibility distance" for a given bridge. Using this distance, determine the required vertical clearance gauge numeral height from the table in ***Title 33 CFR Part 118.160***. Include the following complete details and information for Clearance Gauges in the Plans:

   1. Sign Panel Details - Fully detailed in compliance with the ***USCG Bridge Lighting and Other Signals Manual*** and ***FHWA Standard Highway Signs***.

      a. Clearance Gauge Sign panel showing overall sign dimensions, numerals, numeral height, foot mark dimensions, and if used, intermediate foot mark dimensions

      b. Minimum Clearance Sign panel showing overall sign dimensions and letter height

   2. Schematic details of Clearance Gauge support members and hardware

   3. MLW or NLW, and MHW or NHW elevations

   4. Elevation at which to set the Clearance Gauge, e.g., Elev. 8.97 = 58 on Clearance Gauge

   5. Show front face of Clearance Gauge to be aligned perpendicular to Centerline of Channel

B. For examples illustrating the content and format of completed Clearance Gauge Detail Sheets, see the ***Structures Detailing Manual Examples***.

Commentary: Transoft Solutions' GuidSIGN application may be used to develop the necessary sign details and worksheets to be included in the fender system plans. The Engineering CADD Systems Office (ECSO) has developed a procedure and resources available through the FDOT CADD Support Forum for detailing these signs with the GuidSIGN application. If another application is used or the details are created manually, the detail sheets shall conform to the requirements of this section.

24.7 REPORT OF CORE BORINGS SHEET(S)

Develop and include Report of Core Borings Sheets for the fender system if the boring sheets that are being provided for the bridge are not sufficient for, or applicable to, the design of the fender system. Otherwise, include a cross reference to the Report of Core Borings Sheets for the bridge in the Fender System General Notes. See ***SDM*** Chapter 10 for Report of Core Borings Sheet content requirements.

25 PREFABRICATED BRIDGE ELEMENTS AND SYSTEMS (PBES)

25.1 DESIGN CONSIDERATIONS - GENERAL

Prefabricated Bridge Elements and Systems (PBES) are structural components of a bridge fabricated offsite or in a near-site casting yard for the purpose of reducing onsite construction time as compared to conventional construction methods. For FDOT designs, PBES are project specific and therefore use customizable component sizes and shapes of components and connections, various fabrication and construction methods, and viable means of transportation and project access. A coordinated effort between the designer and CADD technician is required to develop contract documents that address all design, detailing, and constructability issues of PBES. The information contained herein is for general design considerations and only part of the requirements necessary to develop a quality set of PBES plans.

A. This Chapter contains PBES design considerations as they relate to the following:

   1. Applicability
   2. Connections
   3. Components
   4. Construction Specifications

B. A series of PBES examples are compiled as a supplement to this chapter and are located on the FDOT Every Day Counts website.

C. The designer and detailer shall comply with other sections of the ***SDM*** to supplement drafting and dimensioning requirements for preparation of PBES plans.

D. The following references contain additional information related to PBES and Accelerated Bridge Construction (ABC):

   1. Every Day Counts training videos covering the use of PBES and alternative contracting strategies for providing incentives to accelerate bridge construction and reduce user impacts are included on the Structures Design Office website.
   2. ***Plans Preparation Manual (PPM)***, Volume 1, Section 26.9.2 provides PBES evaluation criteria for preparation of the Bridge Development Report (BDR). The referenced section of the ***PPM*** formalizes the process for evaluating whether prefabricated options should be considered based on feasibility questions, then, when warranted, how to compare options through an assessment matrix.

25.2 PBES APPLICABILITY

A. PBES is primarily suited for projects with significant "economies of scale," projects with uniform bridge elements, and projects containing long waterway crossings or viaducts for the following reasons:

1. Large projects are able to amortize precast yard costs for project-specific precast components, special equipment, and overhead costs associated with large cranes into the cost of an overall project. In addition, longer duration projects balance the learning curve with increased productivity as the project progresses.
2. High project variability makes component precasting more difficult and costly because the ability for standardization of precast components is limited. Non-standard component fit-up is difficult due to the number of different connection sizes, types, and construction steps leading to loss in production rates. Non-uniformity of components hinders formwork reuse.
3. Reducing construction time over water can reduce overall project costs due to lower associated insurance rates, labor rates, and overhead costs. Bridge components on long waterway projects tend to be more uniform than on over-land projects.

B. PBES may be appropriate on projects with high traffic volumes where it is critical to minimize traffic impacts or where construction of the structure is time critical. Suitability of PBES on a specific project can be evaluated using the Precast Feasibility Assessment in ***PPM***, Volume 1, Chapter 26.

25.3 PBES CONNECTIONS

Fit-up during construction is a major consideration when designing and detailing component connections. Component connections should be detailed for the worst case combination of tolerances that include fabrication and erection tolerances.

Commentary: An allowable amount of variation or misalignment from a specified dimension is termed "tolerance." Designers and detailers of prefabricated bridge projects must account for the combination of fabrication and erection tolerances in every connection. For instance, one element may be low by its tolerance amount and the adjoining element may be high by its tolerance amount.

A. Make the tolerance measurement from a common working point or line for critical elements, see Figure 25.3-1. Show dimensions to pockets and interfacing elements from a common working point to avoid error accumulation during construction.

B. Verify spacing as well as orientation of the interfacing connections within the element. See Figure 25.3-2 for an example of alignment orientation.

Figure 25.3-1 Tolerance Measurement

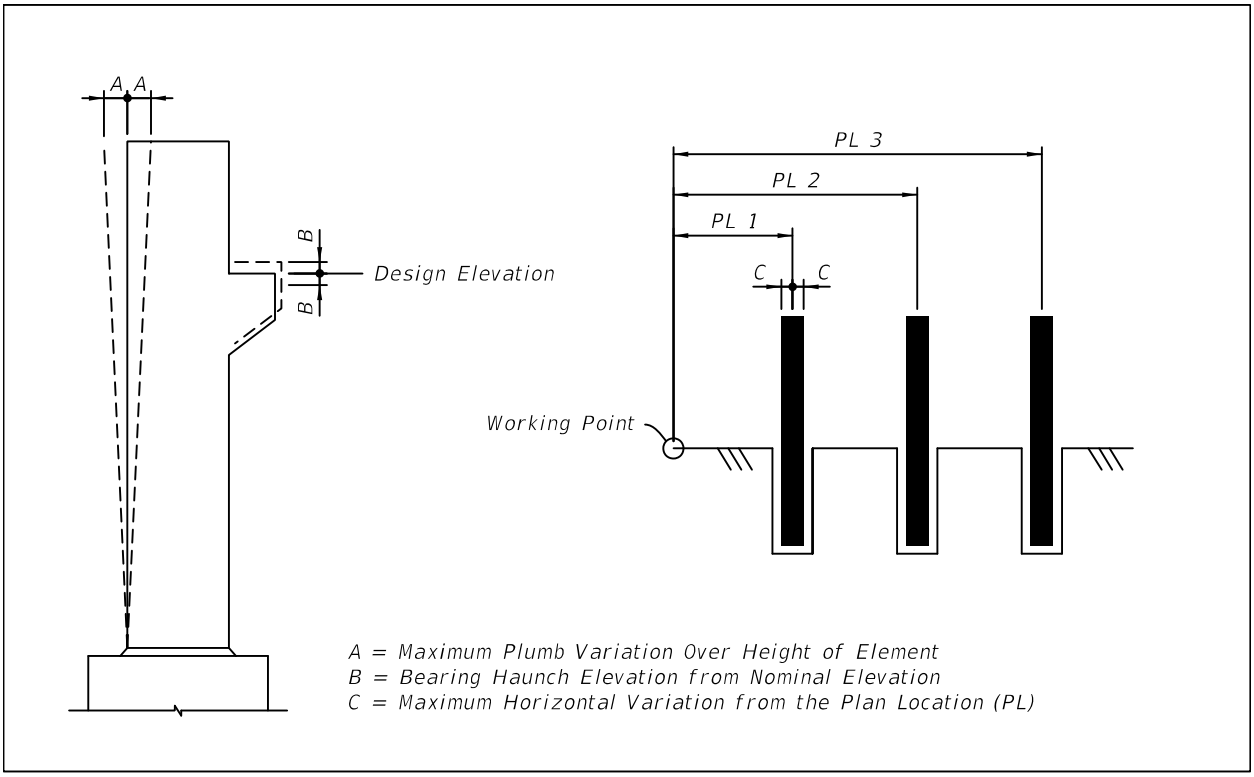

Figure 25.3-2 Alignment Orientation

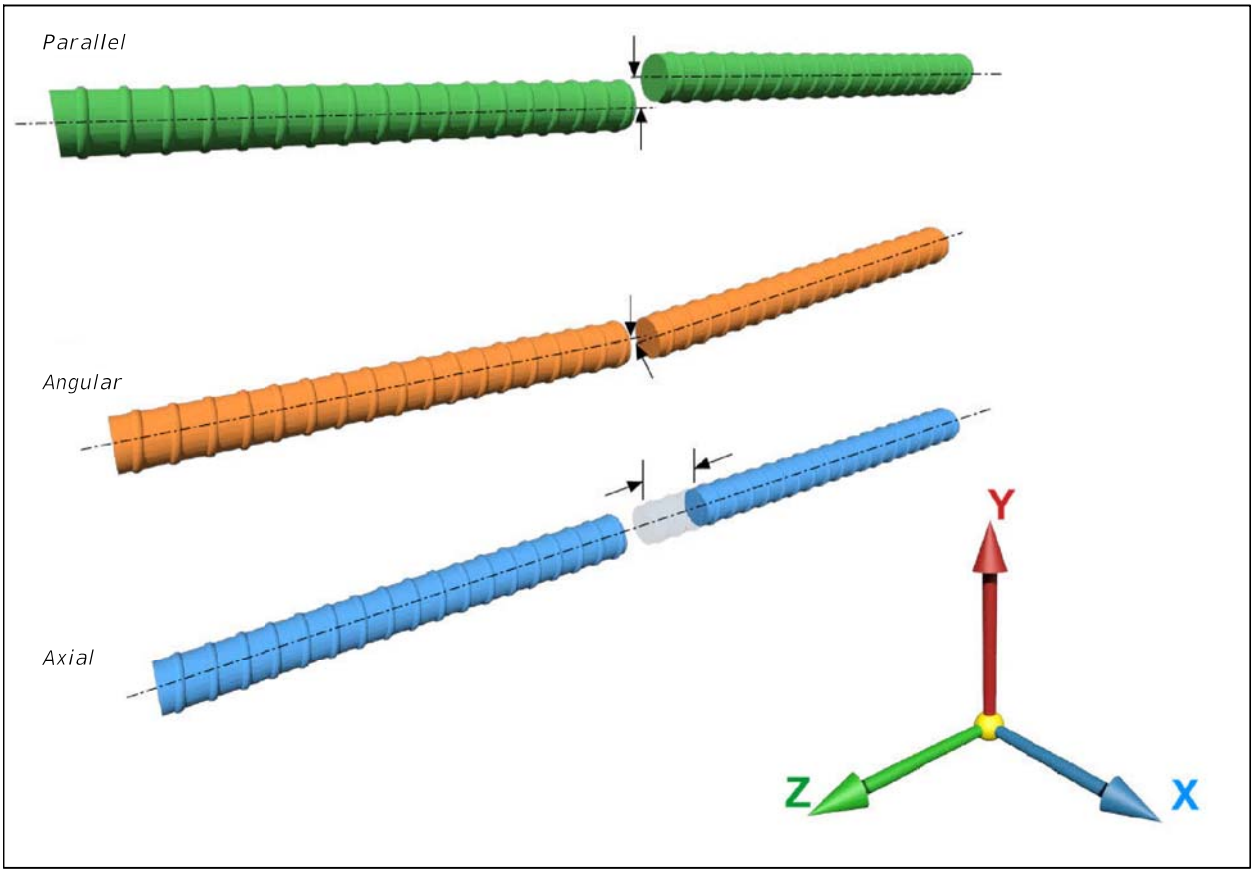

C. Fabrication tolerances that have to be accounted for include beam cambers, beam sweep, warping and bowing, and overall dimensions of all precast elements. The locations of holes, threaded inserts, and block-outs are critical. The general order of magnitude of typical fabrication tolerance is as follows:

Location of holes, threaded inserts, and block-outs	±⅛-inch
Dimensions of precast components	±⅛-inch
Flat Surfaces (deviation from a plane at any location)	0.025 inch/foot, not to exceed a total of ¼-inch

Specify casting tolerances as necessary based on project characteristics and required fit-up.

Commentary: PBES connections and components can vary significantly from project to project depending on the PBES system utilized; as a result, PBES systems generally require Technical Special Provisions for PBES components, Modified Special Provisions and/or Developmental Specifications that add to or revise the Specifications. For example, more restrictive tolerances than what is shown in the Specifications may be required. Tighter tolerances may significantly increase costs and should not be specified unless necessary.

D. Interfacing pretensioned components must include consideration for large differences in camber. Camber variability of prestressed components is affected by a number of items such as: aggregates, curing conditions, strand patterns, casting/detensioning temperatures, design strength versus actual strength of concrete, weekday versus weekend and holiday casting cycles, support conditions during storage, hauling and handling, and component age at time of loading.

Commentary: Camber variability is common. Requiring steam curing or creep testing of the actual concrete mixes used may improve camber predictions; however, fairly large variations in camber may still exist due to other factors such as those listed.

E. Compensate for member tolerances at joints or allow for minor overall variation in the structure dimensions. Consider dimensional growth when specifying the locations of holes, threaded inserts and blockouts. The joint widths should accommodate all fabrication and construction tolerances. The actual width of elements should be equal to the element spacing minus the specified joint width.

Commentary: If ten panels that are each ten feet wide are placed side by side, the overall length of the system will typically be greater than 100 feet. This is termed "dimensional growth" and is due to a combination of form, width, and eccentricity tolerances of adjoining panels.

F. Detail precast bent caps and pier footing connections to accommodate ±3-inch horizontal pile/shaft placement tolerance. Accommodate a pile/shaft axial alignment tolerance of ±¼-inch. per foot from the vertical or batter line. Flatness and elevation tolerances of a component are specific to the component detail.

G. Consider requiring mock-up testing prior to full-scale fabrication for each unique PBES connection on the project. List in the contract documents any full scale mock-up testing to be successfully completed by the Contractor for all unique connections. Define mock-up test acceptance standards in the contract documents. Clearly identify responsibilities for disassembly and inspection of mock-up testing.

H. For connections between precast components in which reinforcing bar extensions from two or more components overlap, require component-to-component fit-up in the casting yard prior to shipping to the project site. In lieu of a component-to-component fit-up, the Contractor may demonstrate that interfacing components do not conflict through the use of a transfer template. This requirement may be relaxed on a project-by-project basis based on the number of form set-ups being utilized, quality of the templates used to locate the reinforcing steel, and repeatability of the finished product.

I. Avoid details with blind blockouts and pockets wherever possible. Develop details that facilitate worker access and inspection access from above.

Commentary: Concrete or grout that is placed in blind blockouts and pockets is typically difficult to consolidate without honeycombing because air can be trapped under solid overlying surfaces. In cases where in-fill material is required to be placed under solid overlying surfaces, slope the surface and vent at high points to reduce air entrapment. Pumping or using a sealed standpipe is typically needed to ensure intimate contact between the in-fill material and the overhead surface.

J. Avoid connections designed with confined space, narrow access and sharp corners. Include vents, overhead pour holes, and chamfers where necessary.

K. Specify the maximum allowable shim height in the contract documents. Shim height limits should be consistent with fabrication and erection tolerances.

Commentary: Joints consisting of non-match-cast grouted connections should be detailed to allow flexibility to make minor adjustments in grade. This is commonly done by means of small shim packs that are placed between connecting elements.

L. Steel shims which are left in place are prohibited.

Commentary: Shims are often left in place in the finished structure. Steel shims are prohibited because they tend to create hard points which concentrate stresses as the structure is loaded, which could lead to spalling of the precast elements. Polymer sheets or circular composite discs constructed from fiber-reinforced polymer (FRP) confinement piping with concrete/grout in-fill, cut to length, may be utilized.

M. Components that are directly impacted by live load and are supported by more than three bearings (e.g. double tee beams) must include details and directions to the Contractor regarding how to ensure uniform bearing between bearing points.

Commentary: Precast elements with more than three bearing points are prone to rocking under live load which may induce larger loads in the connections and elements than were assumed in the design.

25.3.1 PBES Joint Selection

A. Practical PBES joint types include the following:
   1. Match-Cast Joints
   2. Pseudo Match-Cast Joints (see ***SDM*** 25.4.3.5 for Pseudo Match-Cast Epoxy example)
   3. Non-Match-Cast Grouted Joints (excluding beam build-ups between beam and precast deck panels)
   4. Closure Pours Adjoining Members Post-Tensioned Together
   5. Closure Pours Adjoining Members Not Post-Tensioned Together

   For a more complete description of these joint types, refer to the descriptions herein. In general, the type and width of joints between PBES elements are based on the worst case combination of fabrication and erection tolerances.

B. Selection of joint type and joint width will also depend on whether adjoining members are to be post-tensioned. If post-tensioning is required, then the joint must accommodate smooth transitions in geometry to avoid stress risers due to abrupt changes in duct alignments. Generally, a 12-inch wide closure pour is sufficient to couple ducts. Where post-tensioning anchors are located on the face of the joint, consult post-tensioning suppliers to determine the minimum joint width to accommodate jack access.

Commentary: For example, on a spliced pretensioned I-beam project, match-casting between field sections would be problematic because the camber tolerances are too large. In this case, a 2 foot minimum closure pour width is used to accommodate beam camber differences and to provide a smooth duct transition at the splice location.

C. The joint material typically depends on the size of the joint. In general, utilize concrete where the width of the joint exceeds 6-inches, and non-shrink grout where the joint width is less than or equal to 6-inches. Utilize two-face epoxy for match cast joints. See Table 25.3.1-1 for general guidance by joint type.

   Examples of joint material include concrete mixes with shrinkage reducing admixtures and non-shrink grout. Special curing methods may also be appropriate.

Commentary: Material selection should accommodate the worst case fabrication and erection tolerances, e.g. for a pile/shaft-to-cap pocket connection, select a material and material placement procedure which can accommodate a ±3-inch pile/shaft placement tolerance for both the minimum and maximum gaps between adjoining elements.

D. Surface preparation of concrete surfaces prior to casting the joint maximizes bond at component interfaces and minimizes shrinkage. Two options for surface preparation of concrete surfaces include (1) application of epoxy bonding agents, and (2) presoaking surfaces to "saturated surface dry" (SSD) condition. Prepare interfacing

concrete surfaces according to one of the two options listed and in accordance with joint material manufacturer's recommendations.

Commentary: Dry concrete substrate has the tendency to draw water out of a grout or concrete mixture causing a weak bond to develop at the interfacing surfaces. The concrete substrate should be wetted to a SSD condition prior to grout or concrete in-fill application, usually requiring continuous presoaking the area for four to five hours. Consult grout manufacturer's printed recommendations to obtain SSD at the interface surfaces. Provide presoaking times for SSD condition for concrete in-fills.

Epoxy bonding agents have a tack-free time of between 4 and 8 hours which may not be appropriate for certain applications depending on precast component(s) placement, leveling and form sealing time frames. Epoxy bonding agents which have cured prior to casting grout or concrete will have significant adverse influence on the bond of the interfacing surfaces.

E. Non-Match-Cast Grouted Joints generally consist of a ½" joint thickness in which a stiff trowel grade bed of non-shrink grout is placed on the bottom component surface and the mating precast component is then lowered onto the grout bed, using shims or a friction collar to level and control elevation. Excess grout is displaced and the joint is tooled to achieve a smooth grout line. See Figure 25.3.1-1.

Figure 25.3.1-1 Grout Bedding Process

Table 25.3.1-1 Joint Type

Joint Type [material used]	Applications	Width of Joint
Match-Cast Joints [two-face epoxy]	Adjoining members are post-tensioned together	zero
	Adjoining substructure members are connected with grouted reinforcing sleeve couplers at a horizontal joint[1]	
Pseudo Match-Cast Joints[2] [two-face epoxy]	Adjoining members are post-tensioned together	zero
	One of the elements is precast and the other is cast-in-place	
	Adjoining substructure members are connected with grouted reinforcing sleeve couplers at a horizontal joint[1]	
Non-Match-Cast Grouted Joints (excluding beam build-ups between beam and precast deck panels) [non-shrink grout]	Adjoining members are not post-tensioned together	Varies depending on element tolerances ½-inch minimum
	Members are joined with grouted reinforcing sleeve couplers	
	Element to element tolerances within ±¼-inch	
Closure Pours Adjoining members are post-tensioned together [Concrete]	Where dimensional variability of adjoining ducts is high or where jack access is required	2'-0" minimum
	Where duct coupling is required and dimensional variability of adjoining ducts is relatively low and jack access is not required	1'-6" minimum
Closure Pours Adjoining members are not post-tensioned together [Concrete][3]	Members are joined with reinforcing bar extensions (Lap Splices)	As required to develop reinforcing 2'-0" minimum
Closure Pours Adjoining members are not post-tensioned together [Ultra High Performance Concrete (UHPC)[4]]	Members are joined with reinforcing bar extensions	As required to develop reinforcing 6-inches minimum[5]

1. ***LRFD*** 5.14.2.4.2 requirements for minimum stress across epoxy joints are intended to control geometry for segmental applications and may be waived for this application.
2. See Section 25.4.3.5 for Pseudo Match-Cast Epoxy example.
3. Concrete mixes with shrinkage reducing admixtures.
4. Prepare specification requirements to prevent sole-sourcing a proprietary product.
5. ***LRFD*** 5.14.4.3.3e requirement for a minimum pour width is waived for UHPC.

25.3.2 Grouted Reinforcing Sleeve Couplers

A. The typical coupler can accommodate minor variation in bar locations. In general, the coupler can be oversized by two bar sizes to provide a ±½-inch. tolerance for component placement. Maximum bar size may be limited by bar coupler size. Consider congestion of reinforcement and concrete cover requirements where couplers are used.

B. If a design requires the connection of a precast element to a field cast portion of the bridge, require the contractor to utilize a transfer template to ensure proper reinforcing steel placement for fit-up.

Commentary: Quality control on bar and splice locations is critical. Custom transfer templates are required for each situation. For example, a transfer template provides relative connection reinforcement locations in a C.I.P. footing for a precast column. In the case of a multi-column pier, the transfer template also includes spacing between columns and the relative orientation of each column to ensure critical fit-up.

25.3.3 Reinforcing Bar Connections

A. Detail connections to avoid reinforcing bar conflicts during placement. See Figure 25.3.3-1 through Figure 25.3.3-6 illustrating connection concepts to avoid conflicts with adjacent precast units.

B. In general, detail PBES connections so that all components and reinforcing can be installed by lowering the element vertically into position.

C. Reinforcing bar connections require a closure pour large enough to allow for development length of reinforcing and reinforcement placement and alignment within specified fabrication and erection tolerances.

Figure 25.3.3-1 Precast Slab Beam Connection

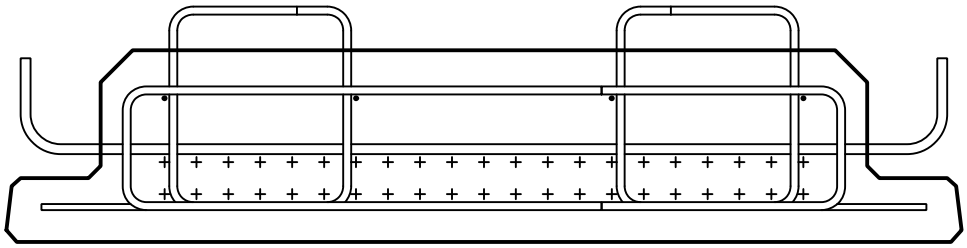

TYPICAL BEAM SECTION
(FSB SHOWN, OTHERS SIMILAR)

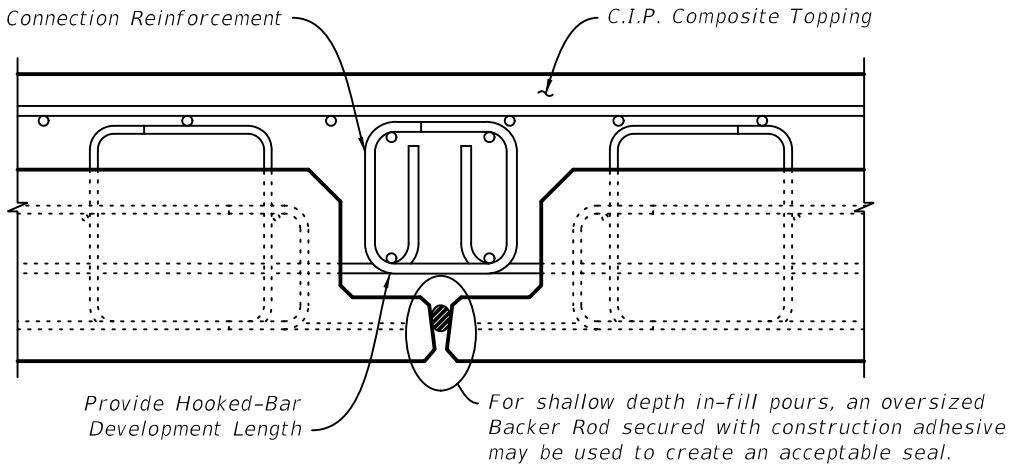

POCKET DETAIL

Figure 25.3.3-2 Precast Unit Connection

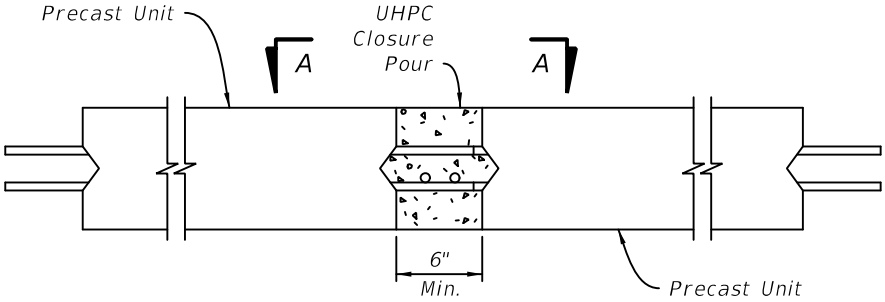

CONNECTION DETAIL

Include consideration of sweep with fabrication and erection tolerances in joint reinforcement placement.

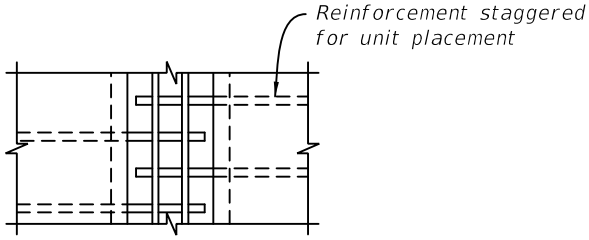

VIEW A-A

D. A combination of hook bars and headed reinforcement may be utilized to reduce the width of closure pours which simplify forming requirements and reduce the cost. See Figure 25.3.3-3 and Figure 25.3.3-4.

Figure 25.3.3-3 Splice Overlap Closure Pour

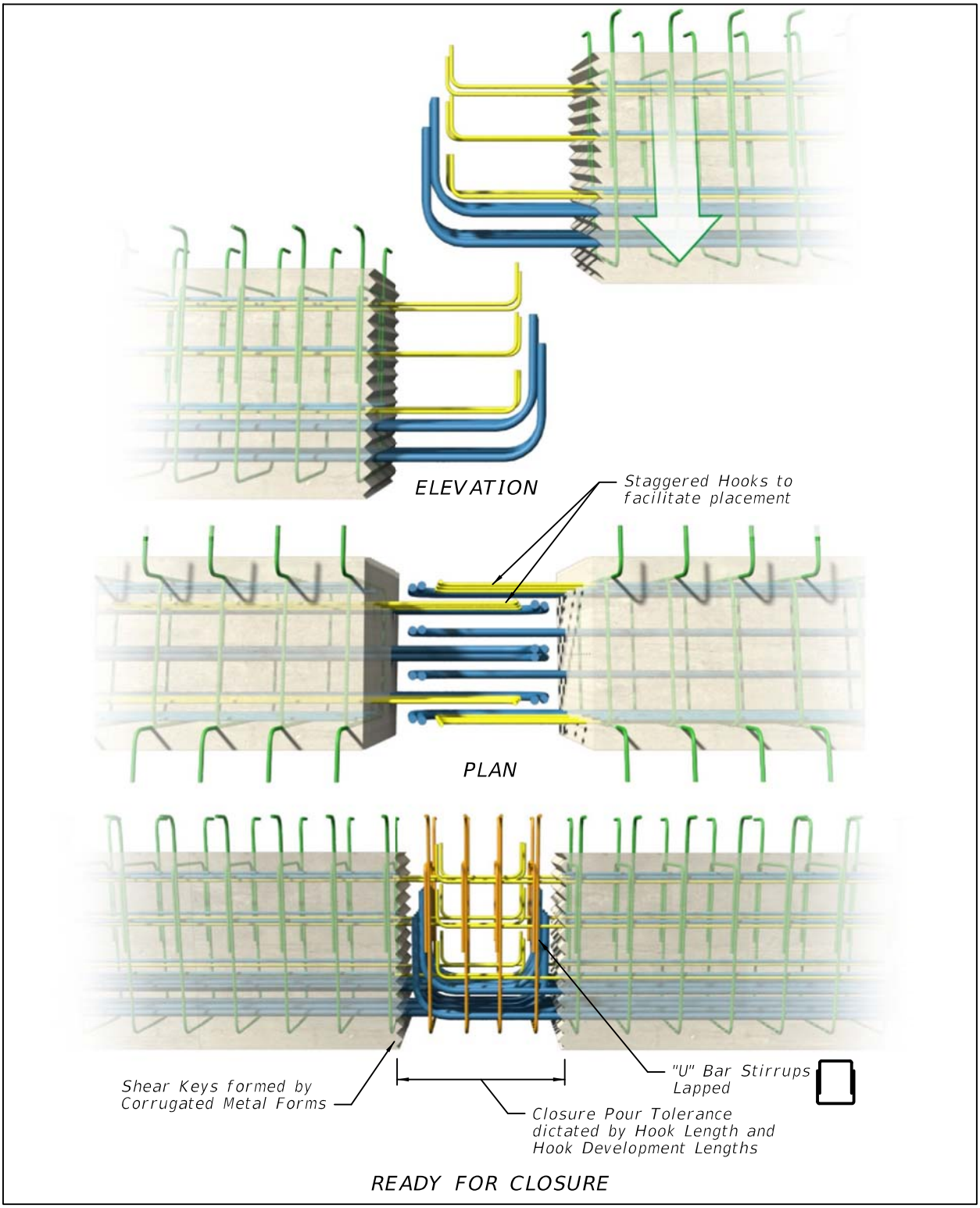

E. Headed reinforcement or reinforcement with mechanically attached anchors are used to reduce anchorage length and serve as an alternative to standard bar hooks. See Figure 25.3.3-4.

F. Stagger overlapping reinforcement extensions to eliminate conflicts during fit-up. Provide necessary confinement required for non-contact lap splices. Detail confinement steel as lapped "U" bar pairs that can be inserted from the top and bottom of the connection.

Figure 25.3.3-4 Headed Bars and Hooks Closure Pour

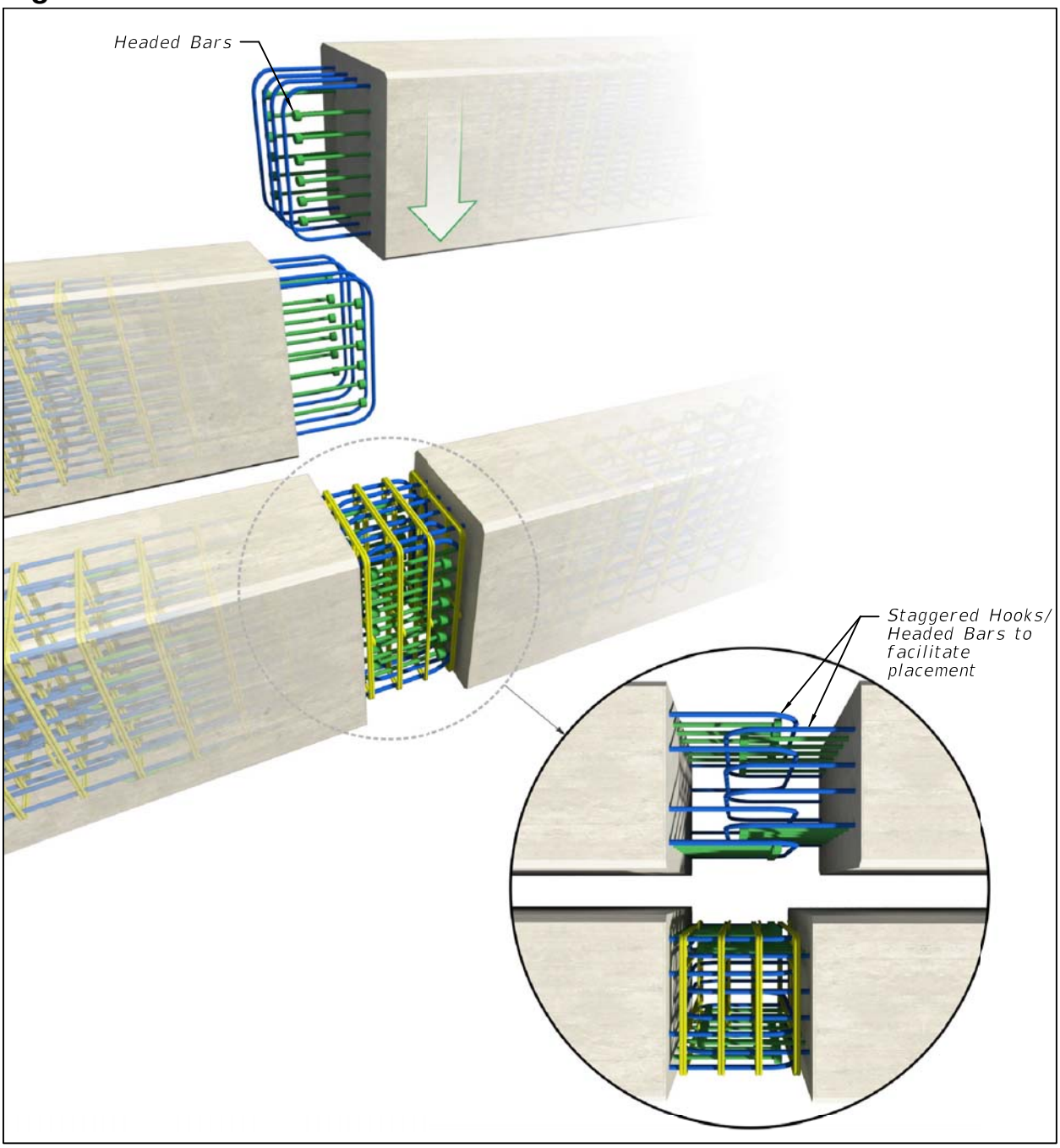

25.4 PBES COMPONENTS

Prefabricated bridge component sizing will vary based on project specific factors such as haul routes, erection and hauling equipment, and site specific construction access.

25.4.1 Sizing

General rules for sizing components are as follows:

A. Size components such that the total hauling width including projecting reinforcing does not exceed 16 feet.

B. Maximum weight should be 60 tons for elements to be lifted using one crane and 120 tons for horizontally oriented elements long enough to be lifted using two cranes. This assumes crane access allows for reasonable short boom reaches to place components.

C. Components longer than 130 feet or weighing more than 80 tons require coordination through the Department's Permit Office during the design phase of the project. Maximum component height, including projecting reinforcing, should be 9 feet or less for shipping on roadways. Some components (e.g. noise wall panels) with heights up to 12 feet may be shipped on an incline or on lowbed trailers.

D. Shorter and/or lighter components may be required if access to the bridge site is limited by roadway(s) with sharp horizontal curvature or weight restrictions. Strategies for reducing substructure component weights include using U-shaped precast pier caps and H-shaped or hollow box pier columns. Flowable or self-consolidating concrete with embedded polystyrene blocks or hollow void formers may be utilized to lighten precast elements. Address quality control aspects of securing void formers during concreting to ensure concrete cover is maintained. Quality control of size, placement, and shape of the blocks is critical to ensure element weights and section properties are accurate. Detail void former shape to minimize potential for trapped air and honeycombing and provide vents as required. Provide drains at the low point of voids if embedded polystyrene blocks are not utilized. For vertical elements with embedded polystyrene blocks, investigate pour limits based on hydrostatic pressures.

E. When permitted, lightweight concrete may be used to reduce component weight.

F. Consider designing optional splices for large element sizes where practical.

Size components on a given project to be similar in weight to optimize shipping and crane usage. Some components of large elements may be impractical to precast due to size and weight.

25.4.2 Handling

PBES components shall accommodate temporary load conditions during production, transportation and erection.

A. For PBES components placed by cranes from barges, barge listing may limit component size depending on the weights and boom reaches involved. As a rule of thumb, limit heavy component weights in the range of 60 to 80 tons, depending on crane reach.

B. Component handling during construction may introduce stresses in components that must be mitigated in the design. The designer is responsible for checking handling stresses in components for lifting locations shown in the plans. Consider the following general criteria for pick point design:

1. Use two-point picks for columns and pier caps.
2. Use two-point picks for wall panels which are cast vertically or panels which are cast on tilt beds.
3. Specify maximum sling angle or use spreader beam.

Commentary: For small sling angles, significant moments may result due to P-delta effects. For more information see "Rigging Configurations" in the ***PCI Design Handbook: Precast and Prestressed Concrete****, Sixth Edition, MNL-120-04, Precast/Prestressed Concrete Institute, Chicago, IL, 2004.*

4. For components requiring more than two-point picks located in a flat plane, design for a maximum deviation from the plane. For example, all pick points in a 3D space shall remain coplanar ±¼-inch.
5. Provide criteria in the contract documents that require rigging to be designed and submitted as shop drawings by a Specialty Engineer. All various picks from stripping in the precast yard to placement at the bridge site shall be addressed.

Commentary: Handling stresses and forces are influenced by the type of rigging used. Temporary stresses shall be held below design limits by designing the rigging to utilize a combination of tilt tables, rolling blocks, stiff spreader beams, etc.

6. Use a dynamic load allowance of 25%.
7. Use form stripping load multipliers of 1.5 and 1.7 for exposed aggregate and smooth surface forms, respectively.

Commentary: To account for the forces on the member caused by form suction and impact, it is common practice to apply a multiplier to the member weight and treat the resulting force as an equivalent static service load.

8. Do not show lifting hardware in contract documents. The designer is required to verify at least one lifting hardware manufacturer can provide a device that can resist anticipated loads.
9. Lifting devices will be removable below the top surface of the component after placement. Fill divots and voids with non-shrink grout after placement. Specify lifting hardware to be left in place must meet cover requirements at all external surfaces.

25.4.3 PBES Component Examples

The following conceptual details are based on designs previously used in the State of Florida. Although PBES components vary significantly from one project to the next, the Designer should evaluate the effectiveness of these details for use on any specific project. Plan sheets that include notes to designers are located on the Every Day Counts website.

25.4.3.1 Precast Pier

A. Require Shop Drawings and an Erection Plan in the contract documents. See ***SDM*** 25.5 for items to be included.

B. Require one full-scale mock-up of each unique grouted connection prior to fabrication of components. Mock-up fabrication and acceptance standards shall be identified in the contract documents.

C. Require component-to-component fit-up in the casting yard of all components prior to shipping. In lieu of a component-to-component fit-up, the contractor may demonstrate interfacing precast components do not conflict through the use of a transfer template.

D. All C.I.P.-to-precast connection interfaces require transfer templates.

Commentary: The transfer template is a three dimensional frame or jig that provides orientation of bar placement and other interfacing hardware within a C.I.P. component to ensure fit-up with the precast element. On precast multi-column piers, the template provides orientation of bar placement in the C.I.P. footing and orientation of columns relative to each other. A closure pour in the cap of a multi-column pier allows a simpler template to be used for bar placement in the C.I.P. section. Therefore, an optional closure pour allows C.I.P. footings to be cast prior to precasting the pier cap.

E. Grouted joints accommodate fabrication and construction tolerances. A grouted joint is required at cap-to-column and column-to-footing interfaces. Precast column components may be connected using match-cast two-faced epoxy joints.

F. See Figure 25.4.3.1-1 and Figure 25.4.3.1-2 for an example of a precast pier fit-up.

Figure 25.4.3.1-1 Precast Pier Assembly

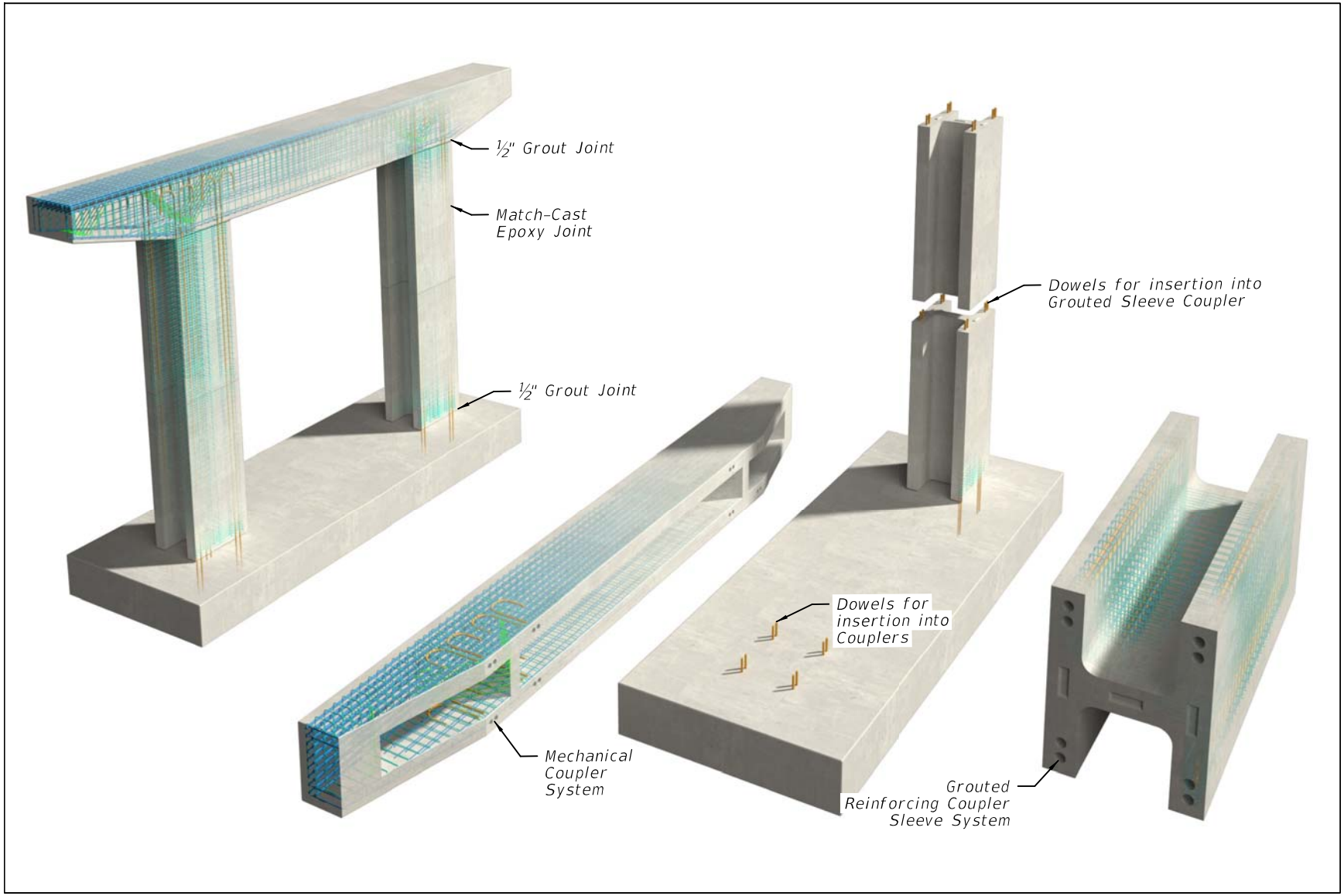

Figure 25.4.3.1-2 Precast Pier

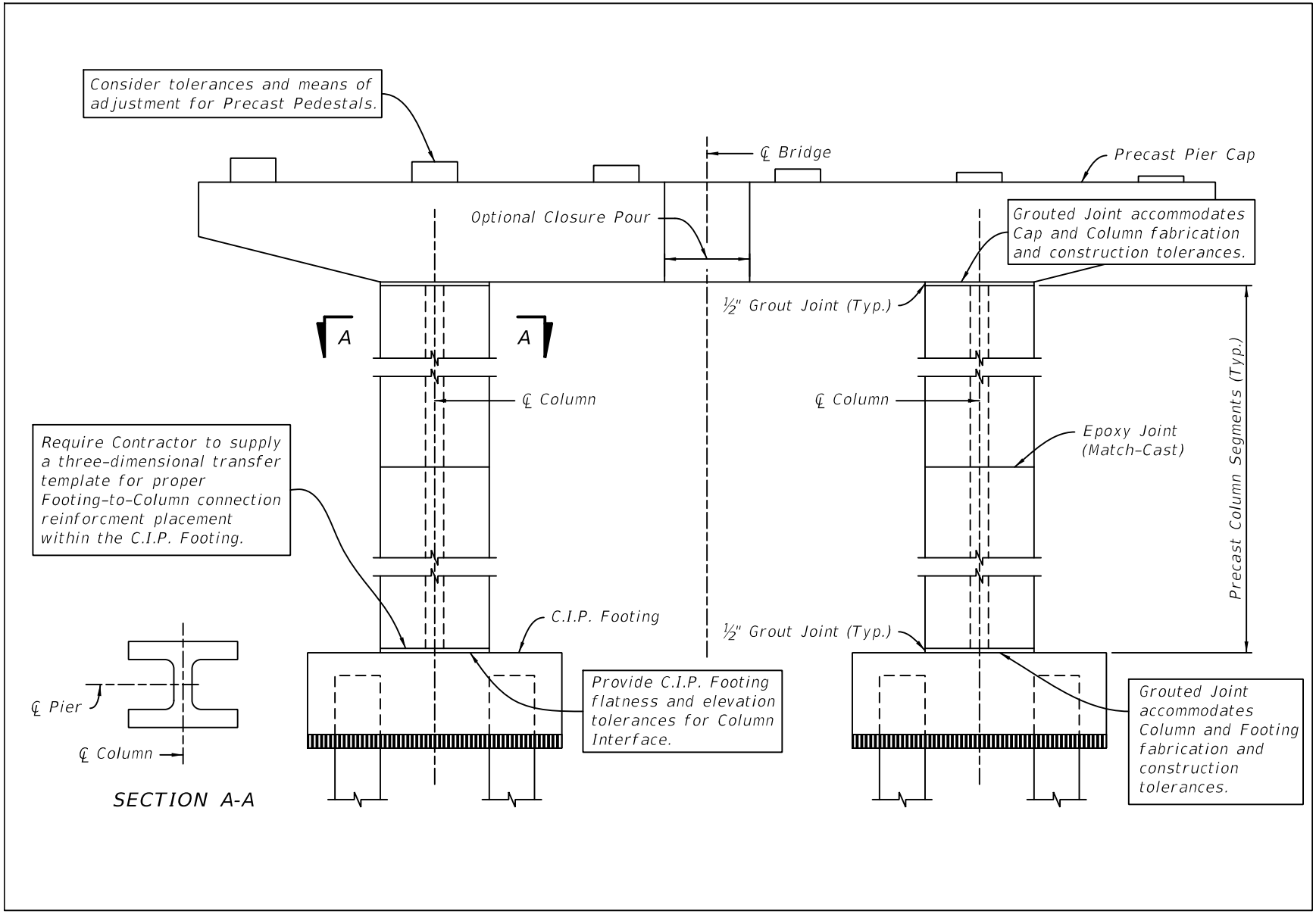

25.4.3.2 Precast Column

A. Lifting weights often control the size of components. It is general practice to design components to have similar weight to be consistent with crane and erection equipment requirements. Geometric configurations, such as H-sections for columns, reduce lifting weights of components. See Figure 25.4.3.2-1 for column details, Figure 25.4.3.2-2 for fabrication technique, and Figure 25.4.3.2-3 for foundation preparation.

B. Mechanical couplers provide connections between components. It is typically acceptable to oversize couplers two bar sizes to accommodate bar location tolerances. Couplers must meet cover requirements. SeeFigure 25.4.3.2-4 for example of coupler at match-cast section.

C. For piers subject to vessel impact, check shear friction capacity at all column sections and reduce ship impact distribution to the superstructure accordingly.

Figure 25.4.3.2-1 Precast Column Details

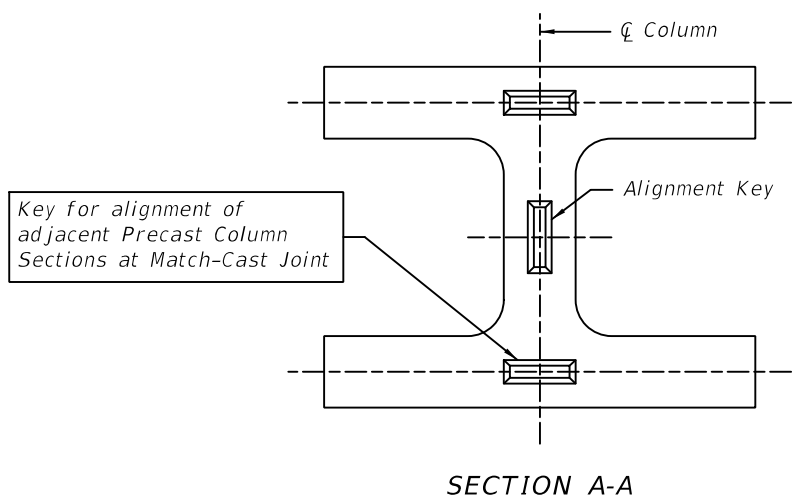

Figure 25.4.3.2-2 Fabrication of H-Section Pier Column

Figure 25.4.3.2-3 C.I.P. Foundation and Precast H-Section Pier Column

Figure 25.4.3.2-4 Mechanical Coupler at Match-Cast Joint

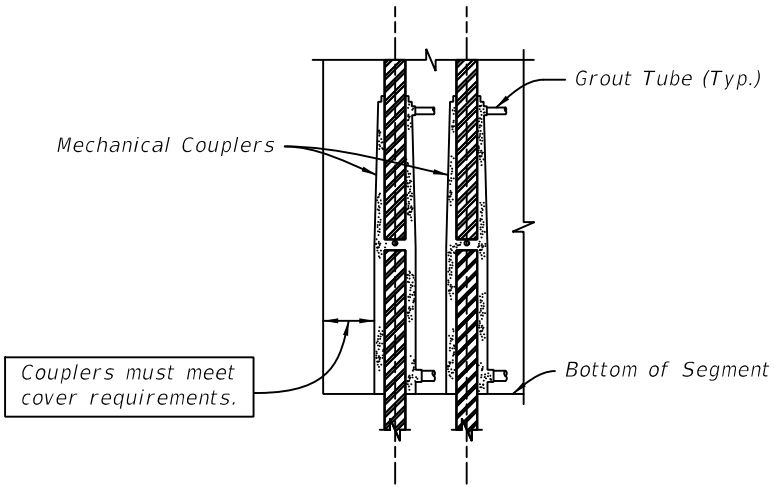

25.4.3.3 Precast Pier Cap

A. Require Shop Drawings and an Erection Plan in the contract documents. See ***SDM*** 25.5 for items to be included.

B. Size cap elements for construction equipment and boom reach using site specific construction access assessment (see Figure 25.4.3.3-1). For over-land projects, include haul route assessment in the component sizing effort.

C. Lifting weights often control the size of components. It is general practice to design components to have similar weight to be consistent with crane and erection equipment requirements. Geometric configurations, such as U-shape and T-shape sections for caps, reduce lifting weights of components and can provide an aesthetic distinctiveness to a project.

D. Thin layers of grout beds usually require tooling. Skilled workers are needed to place and tool grout properly. See Figure 25.4.3.3-2.

E. Specify non-metallic shims to be left in place. Specify maximum shim heights consistent with construction tolerances. Specify that a Specialty Engineer needs to provide shim placement and loads as part of the Erection Plan requirements.

Figure 25.4.3.3-1 Precast Pier Cap Installation

F. Specify non-shrink grout from the Approved Product List (APL) and saturated surface dry (SSD) condition of interfacing surfaces. Require surfaces and curing to be prepared in accordance with manufacturer's recommendations.

G. Require one full scale mock-up of all connections prior to installation. Mock-up fabrication and acceptance standards shall be identified in the contract documents.

H. Require transfer templates for all C.I.P.-to-precast connection interfaces.

I. A three dimensional transfer template taken from a precast pier cap provides orientation of bar placement in the C.I.P. footings and orientation of columns relative to each other in multi-column piers. A closure pour in a cap allows use of a simpler template for bar placement in the C.I.P. footings. Therefore, a closure pour allows C.I.P. footings to be cast prior to precasting the pier cap.

J. When permitted, lightweight concrete may be used to reduce component weights.

Figure 25.4.3.3-2 Precast Pier Cap Details

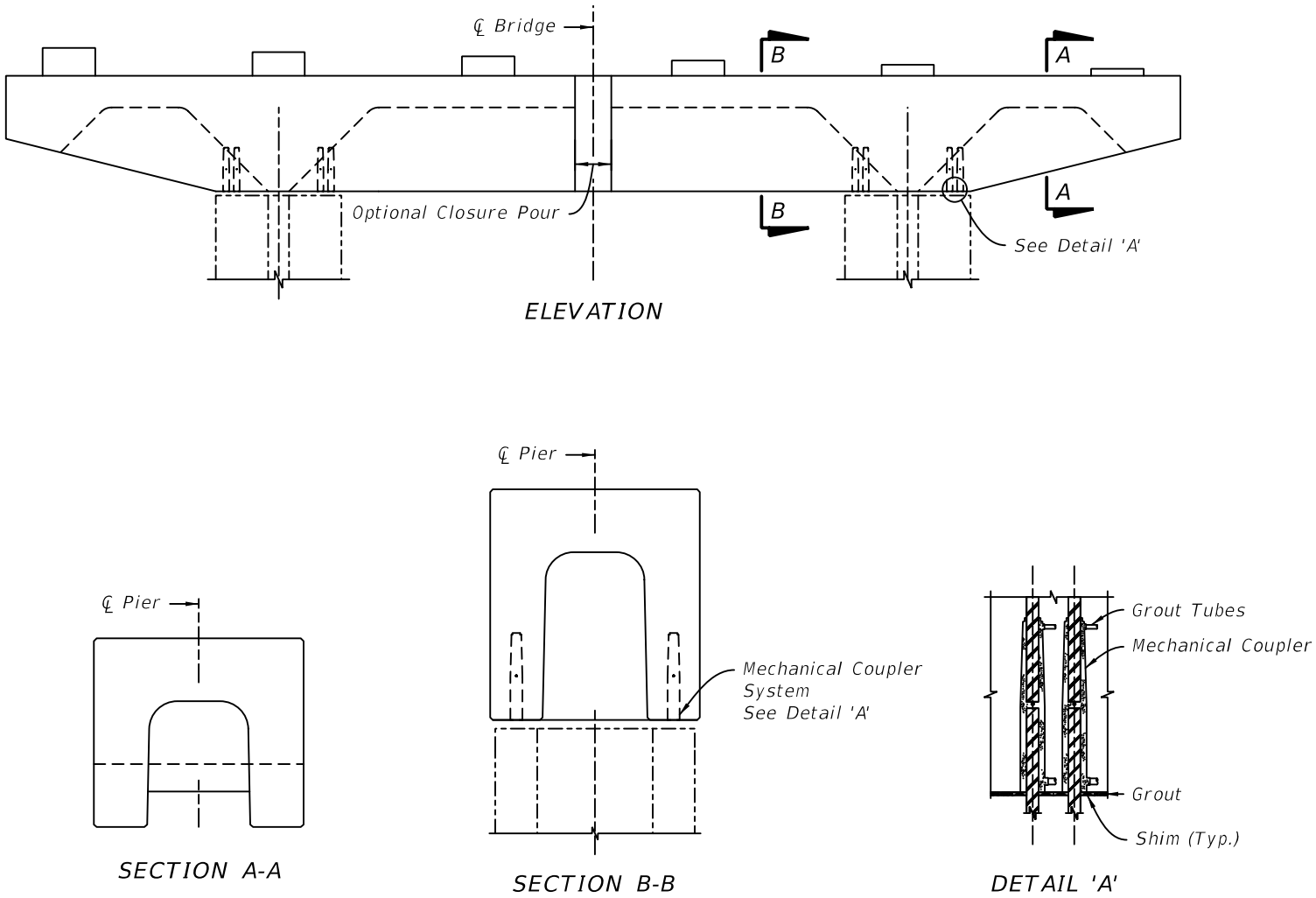

Figure 25.4.3.3-3 Precast Pier Details

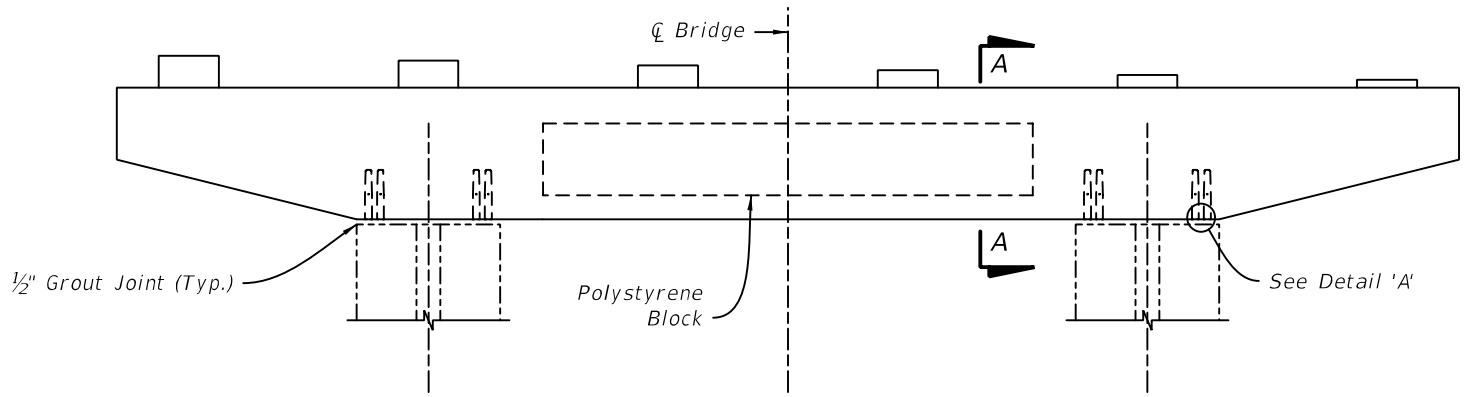

ELEVATION

Use Void Former (e.g. Polystyrene Block) to reduce the weight of the Cap. Utilize flowing concrete with Void Formers. Specify size, placement and securing requirements for Void Formers during concrete placement. Detail Void Former shape and require flowable or self-consolidating concrete to minimize potential for trapped air and honeycombing. Provide drains for voids unless polystyrene Void Formers are used.

Require component-to-component fit-up in the casting yard prior to shipping to the project site. In lieu of a component-to-component fit-up, the Contractor may demonstrate that all interfacing elements do not conflict through the use of a transfer template.

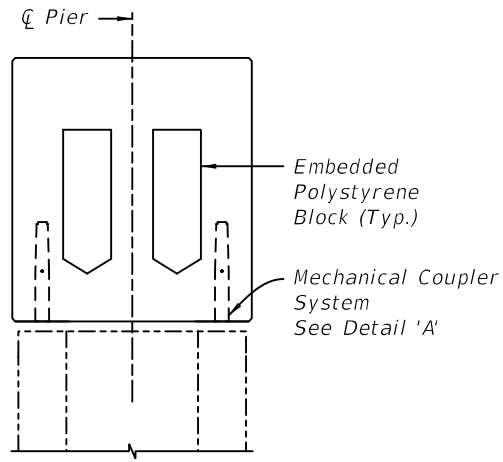

SECTION A-A

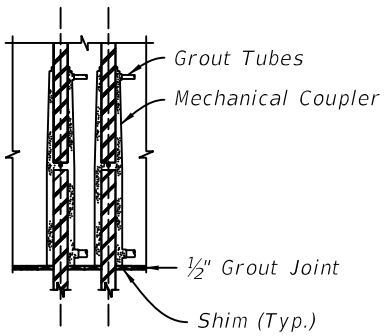

DETAIL 'A'

25.4.3.4 Precast Connection to Drilled Shaft

A. Provide flatness and elevation tolerances in contract documents for top of drilled shafts.

Commentary: A Modified Special Provision is required for tighter top of shaft elevation tolerances and shaft reinforcement placement tolerances than what is required in the Specifications.

B. Place column inner cage within drilled shaft cage at the plan location ±½-inch.

Commentary: The ±½-inch. tolerance assumes spliced sleeves are oversized two bar diameters.

C. Include consideration of column reinforcement allowing for ±3-inch shaft placement tolerance when sizing drilled shaft diameter.

D. Require transfer templates for all C.I.P.-to-precast connection interfaces.

Figure 25.4.3.4-1 Drilled Shaft Detail

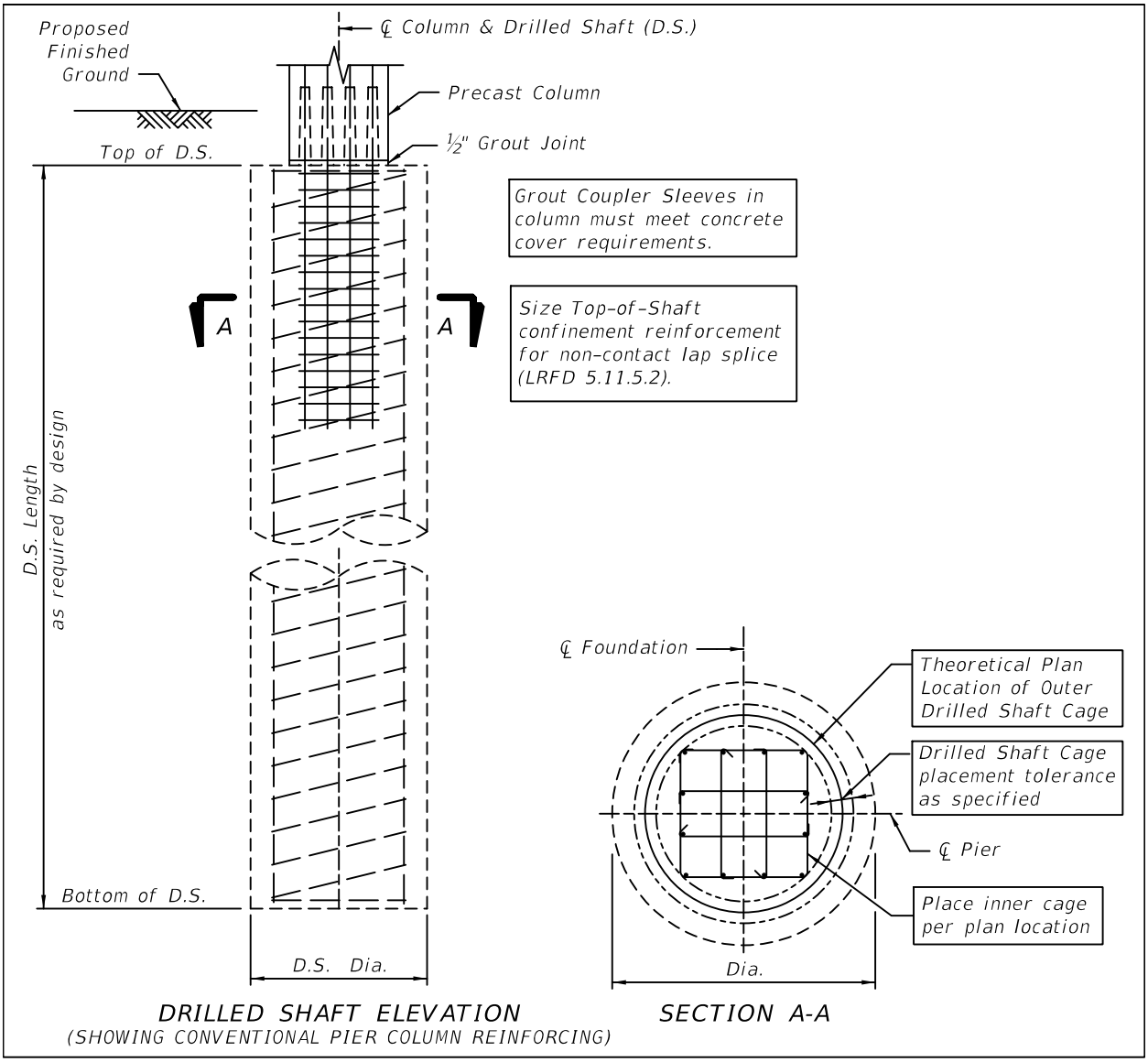

Figure 25.4.3.4-2 Shaft-Column Connection

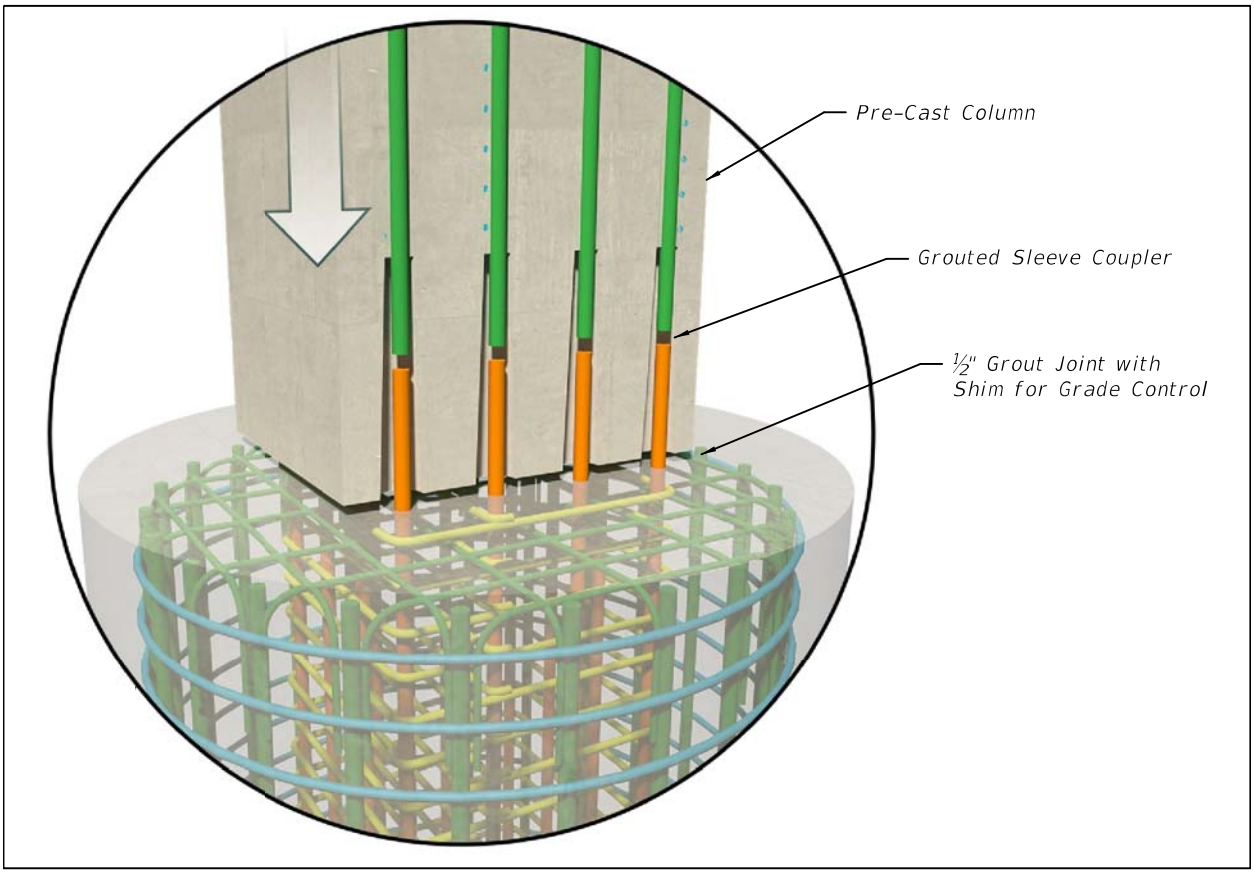

25.4.3.5 Hammerhead Pier Construction (Rev. 01/17)

One of the biggest challenges for bridge construction is managing traffic through a construction zone. Figure 25.4.3.5-1 highlights the challenge of phasing traffic with construction of a hammerhead pier in the median of an existing roadway. Two options using non-standard prefabricated elements to construct the pier wings segmentally are (1) using a 2 foot closure pour and (2) using a hybrid pseudo match-cast process. Both methods are accomplished by using post-tensioning steel embedded in the cast-in-place column cap and precast wings.

Using a 2 foot closure pour process, temporary post-tensioning bars are partially stressed across blocking prior to casting a 2 foot closure pour between the C.I.P. pier column and a precast wing segment. After the closure pour is completed, precast wings that were match-cast are installed and permanent post-tensioning tendons or bars are stressed to finish the process. See Figure 25.4.3.5-2.

The hybrid pseudo match-cast process utilizes steel bulkheads for casting pseudo match-cast surfaces on the C.I.P. pier column and precast wings. See Figure 25.4.3.5-3.

A. Incorporate a transfer template into the C.I.P. pier head form for proper reinforcement connection placement.

B. Temporary framing (strong-back or similar) provides alignment of pier wings during placement and minimizes damage to reinforcing bar extensions.

C. Utilize two-face epoxy at pseudo match-cast joint interfaces.

D. Oversize reinforcement couplers two bar sizes to allow ± ½-inch construction tolerance.

E. Size precast pier wings for construction equipment and boom reach using site specific construction access assessment.

F. Coordinate work operations with temporary traffic control plans.

G. Incorporate segmental specifications for hybrid C.I.P./precast construction. Modify for pseudo match-cast process.

Figure 25.4.3.5-1 Hammerhead Pier Traffic Phasing Concept

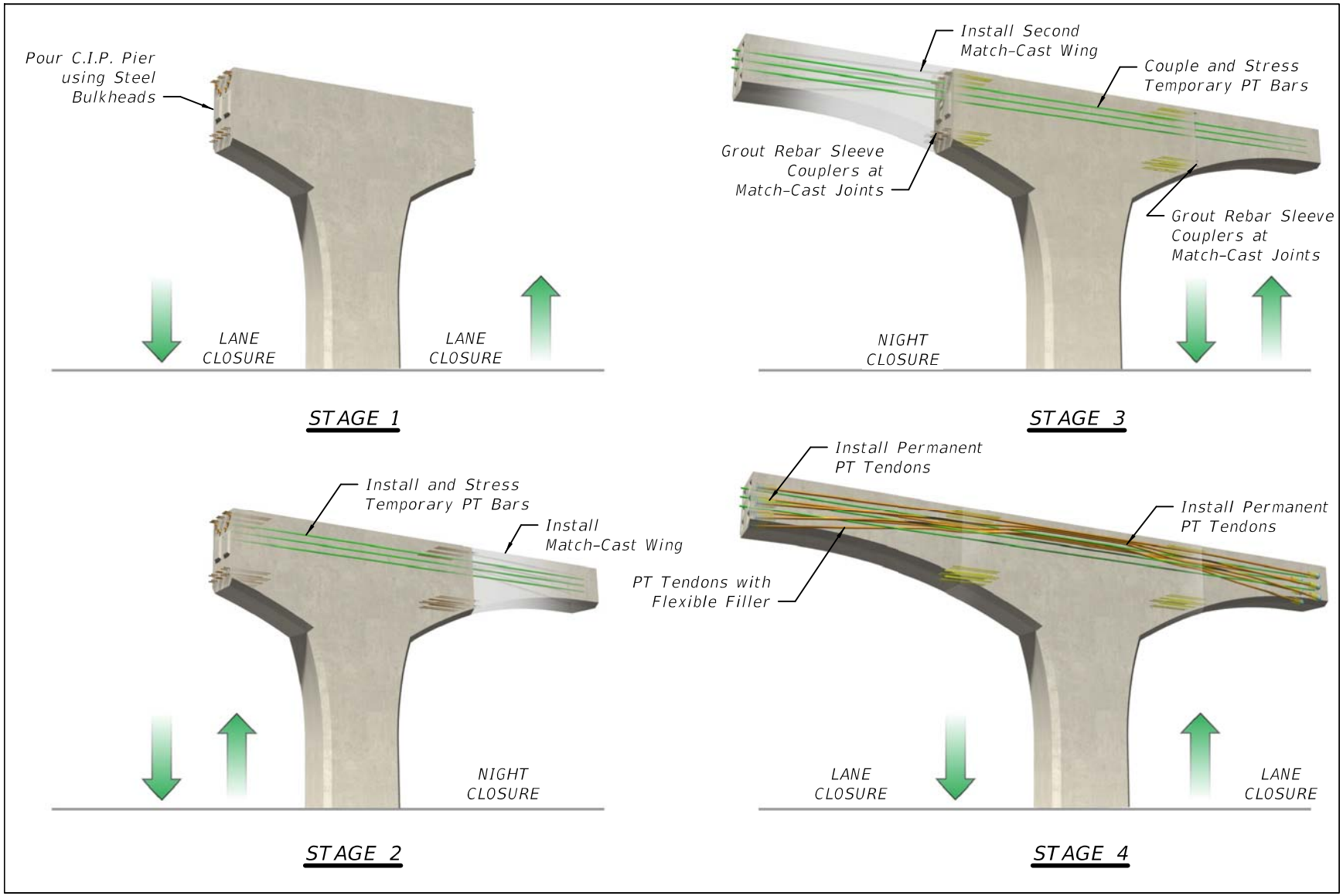

Figure 25.4.3.5-2 Hammerhead Wing Closure Pour

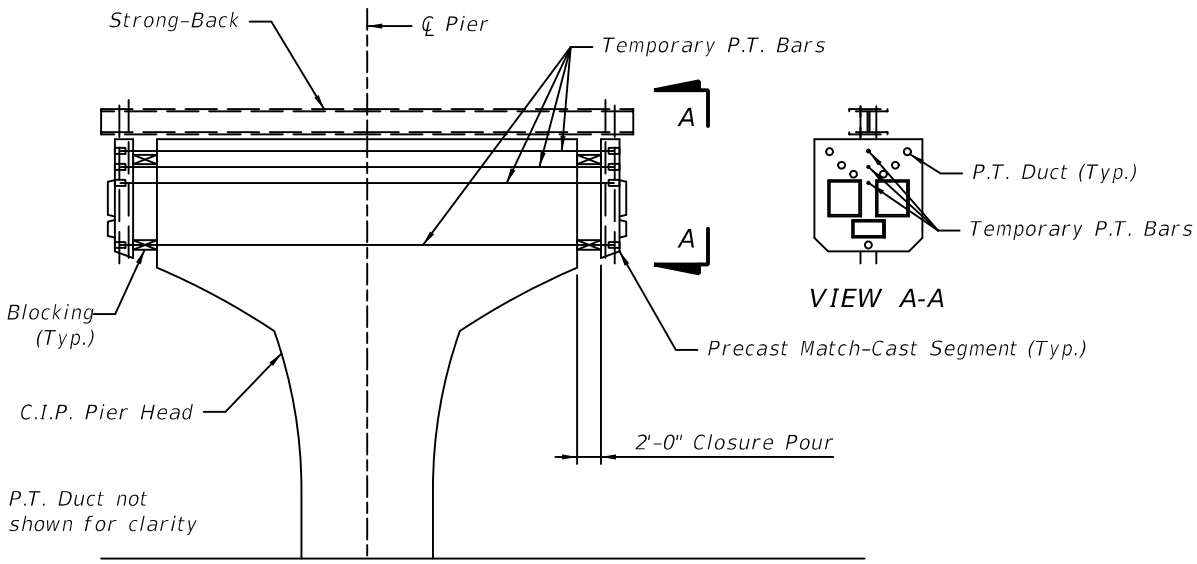

CLOSURE POUR

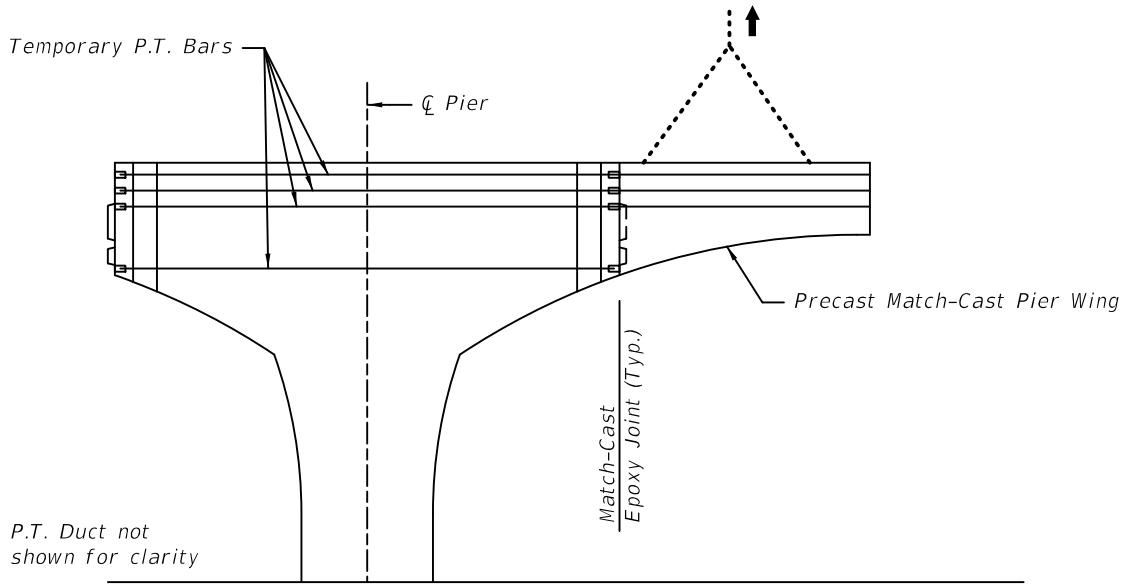

PRECAST CAP WING INSTALLATION

Figure 25.4.3.5-3 Hammerhead Pseudo Match-Cast Epoxy Joint

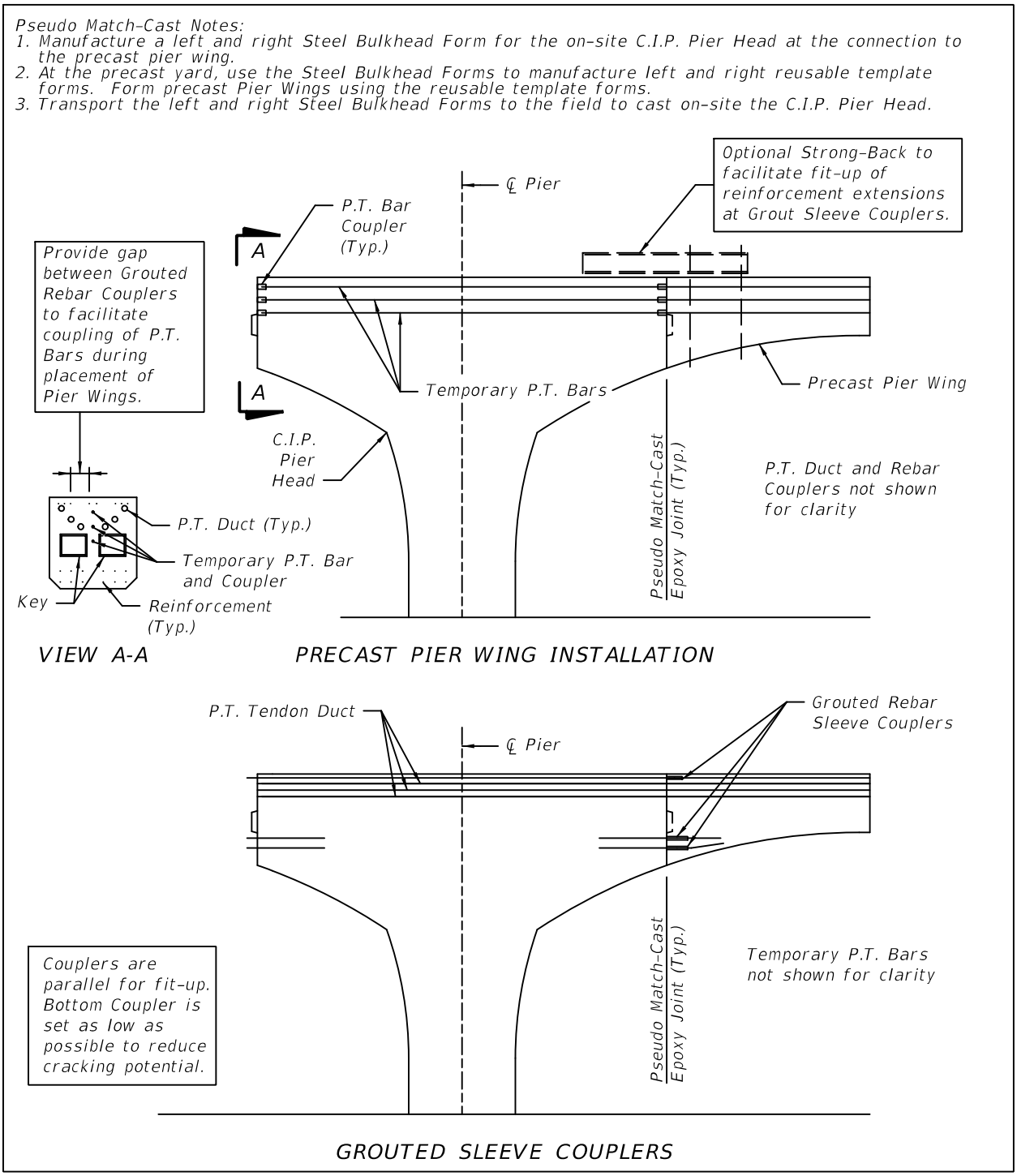

25.4.3.6 Precast Footing

Size foundation components for construction equipment and boom reach using site specific access assessment. Element sizing includes haul route assessment for over-land projects. See Figure 25.4.3.6-1, Figure 25.4.3.6-2 and Figure 25.4.3.6-3.

Figure 25.4.3.6-1 Precast Footing

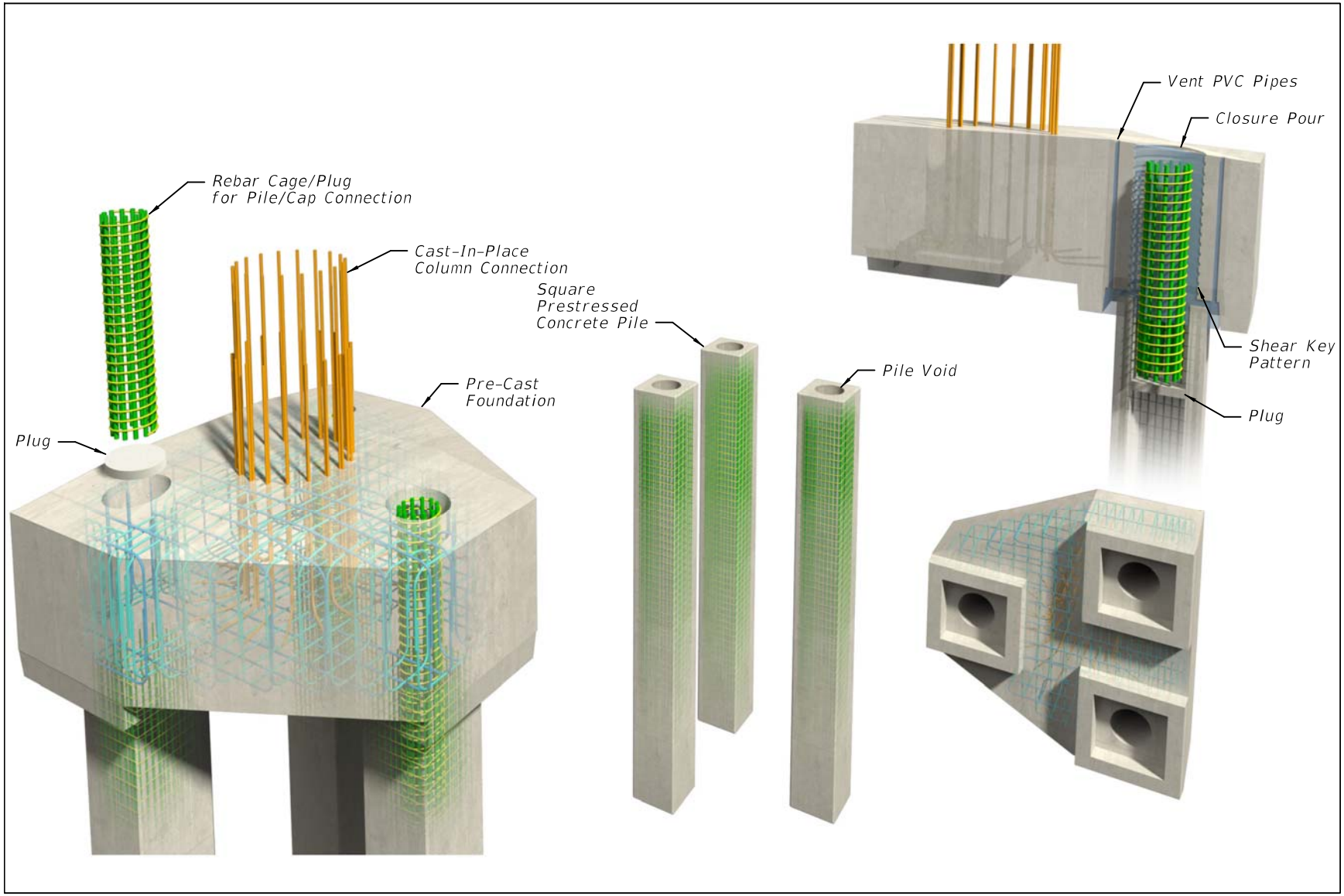

Figure 25.4.3.6-2 Precast Footing Delivery

Figure 25.4.3.6-3 Precast Footing Installation

25.4.3.7 Precast Footing Details

The following notes refer to Figure 25.4.3.7-1.

A. Use non-metallic shims that are left in place. Provide shim loads and maximum shim height in the contract documents. Specify a Specialty Engineer to provide shim placement as part of the Erection Plan requirements.

Commentary: Due to difficulties with concrete consolidation, friction collars are recommended in lieu of non-metallic shims that are left in place when the bearing area is small.

B. Form a shear key with removable corrugated pipe for transfer of shear without need for reinforcement through the plug-cap interface. Size ribs for interface shear transfer. Minimize shrinkage cracks by specifying a compressible form such as a hard pocket former with a rubber liner.

C. A square pile with a circular void provides a larger bearing area for the cap and shims than a square pile with a square void.

D. Oversize the circular void diameter in the cap to accommodate the construction tolerance for pile placement.

E. Specify shrinkage reducing admixture and a seven day moist cure of plug concrete.

F. Provide details to minimize potential for trapped air and honeycombing. Vent pipes and inclined surfaces are common techniques.

G. Prepare all surfaces for in-fill concrete:

   Sand or water blast all interfacing surfaces. After sealing void with first-phase grouting, fill void with water for 4 to 5 hours. Remove water to a saturated surface dry (SSD) condition prior to making the concrete pour.

Commentary: Due to access limitations and tack-free time limits, an epoxy bonding agent is not suitable for this application.

H. Specify a minimum gap between the top of pile and cap surface to ensure in-fill concrete fills voids.

Figure 25.4.3.7-1 Precast Footing Details

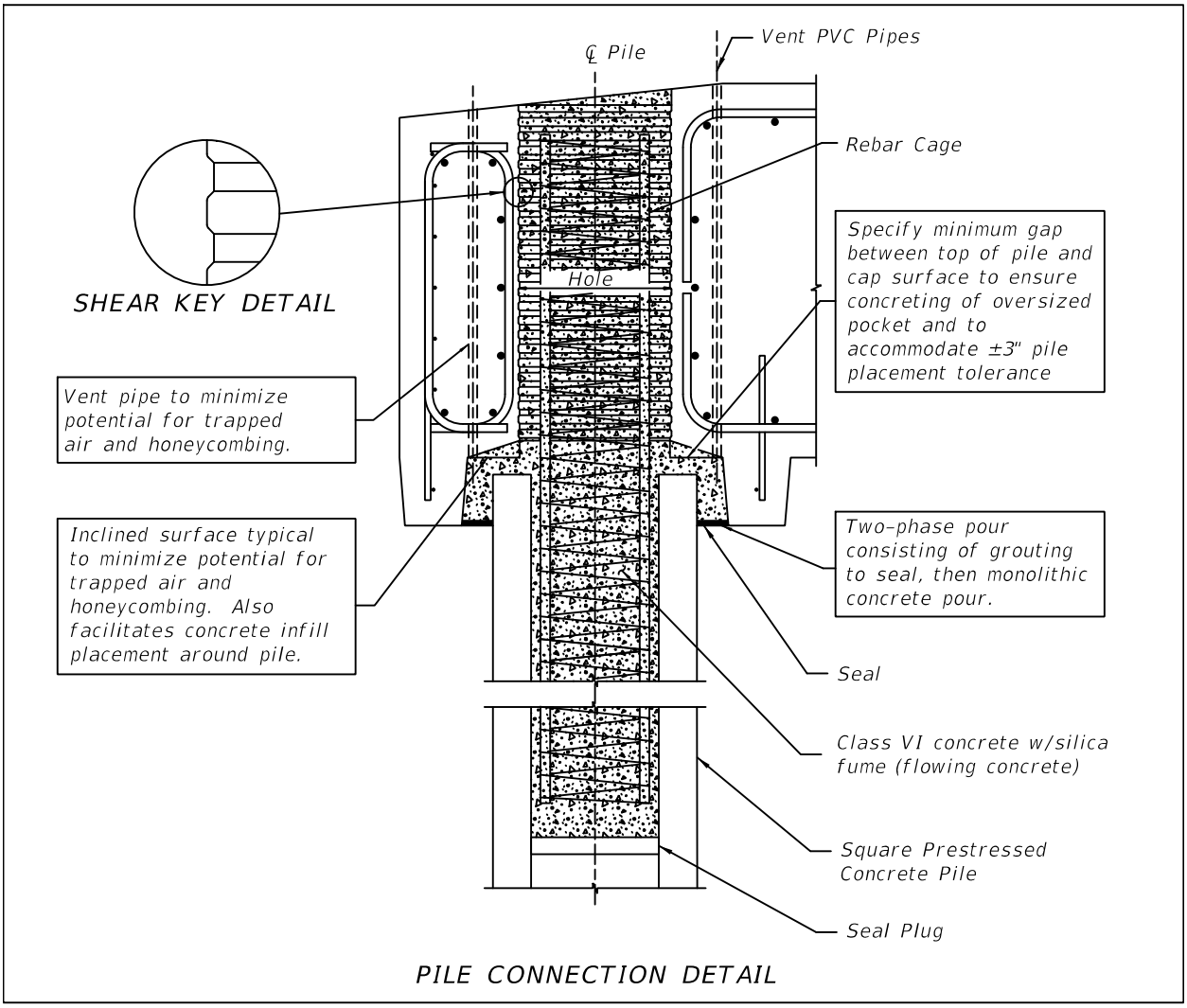

25.4.3.8 Precast Pile Cap

The following notes refer to Figure 25.4.3.8-1.

A. Require Shop Drawings and an Erection Plan in the contract documents. See ***SDM*** 25.5 for items to be included.

B. Require one full-scale mock-up of a single pile-to-cap connection prior to fabrication of components. Mock-up fabrication and acceptance standards shall be identified in the contract documents.

C. Aligning beams over piles allows pedestals to be cast monolithically with in-fill concrete.

Commentary: Pedestals placed over the beams also provide additional protection for the cap-pile interface.

D. Size the precast cap for equipment and boom reach using a site specific construction access assessment. For over-land projects, include a haul route assessment when sizing the cap.

E. A two-phase process for filling the pocket void includes placement of a grout bed using an APL approved non-shrink grout to seal the cap-pile interface followed by a monolithic concrete pour.

Commentary: To create the bearing surface for the precast cap, a bed of non-shrink grout is placed on the top of the piles. The precast cap is lowered onto the piles and set on a friction collar at the desired elevation, displacing excess grout. The joint is then tooled.

F. Specify in-fill concrete to include shrinkage reducing admixture and provide a seven day moist cure.

G. Prepare all surfaces for in-fill concrete.

   Sand or water blast all interfacing surfaces. After sealing void with first-phase grouting, fill void with water for 4 to 5 hours. Remove water to a saturated surface dry (SSD) condition prior to making the concrete pour.

Commentary: Due to access limitations and tack-free time limits, an epoxy bonding agent is not suitable for this application.

H. Require friction collars on piles to support cap prior to grouting. Do not use shims to support cap due to the small bearing area they provide and because they tend to block the flow of grout resulting in an insufficiently grouted interface.

Figure 25.4.3.8-1 Pile Cap Details

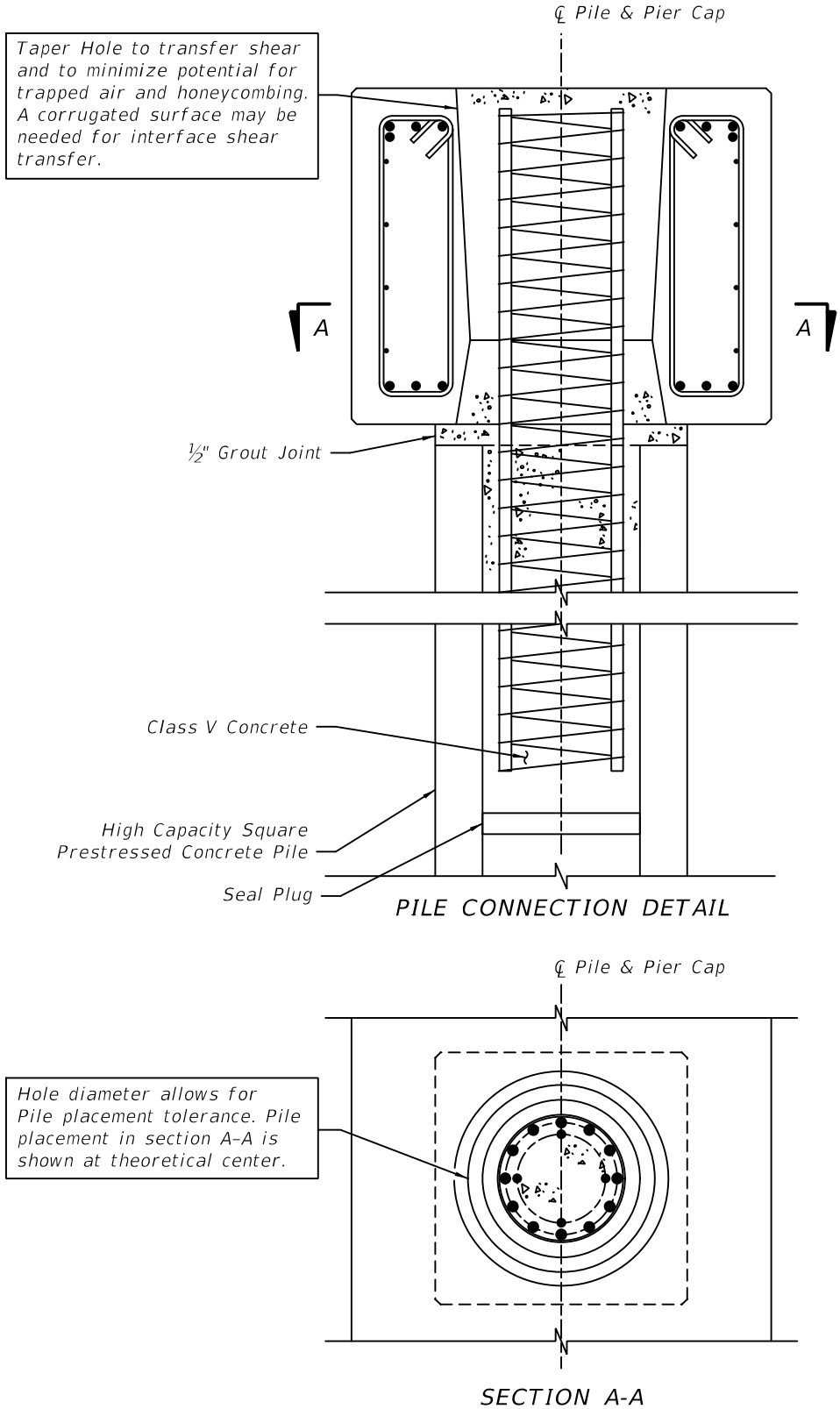

Figure 25.4.3.8-2 Pile Cap Erection Process

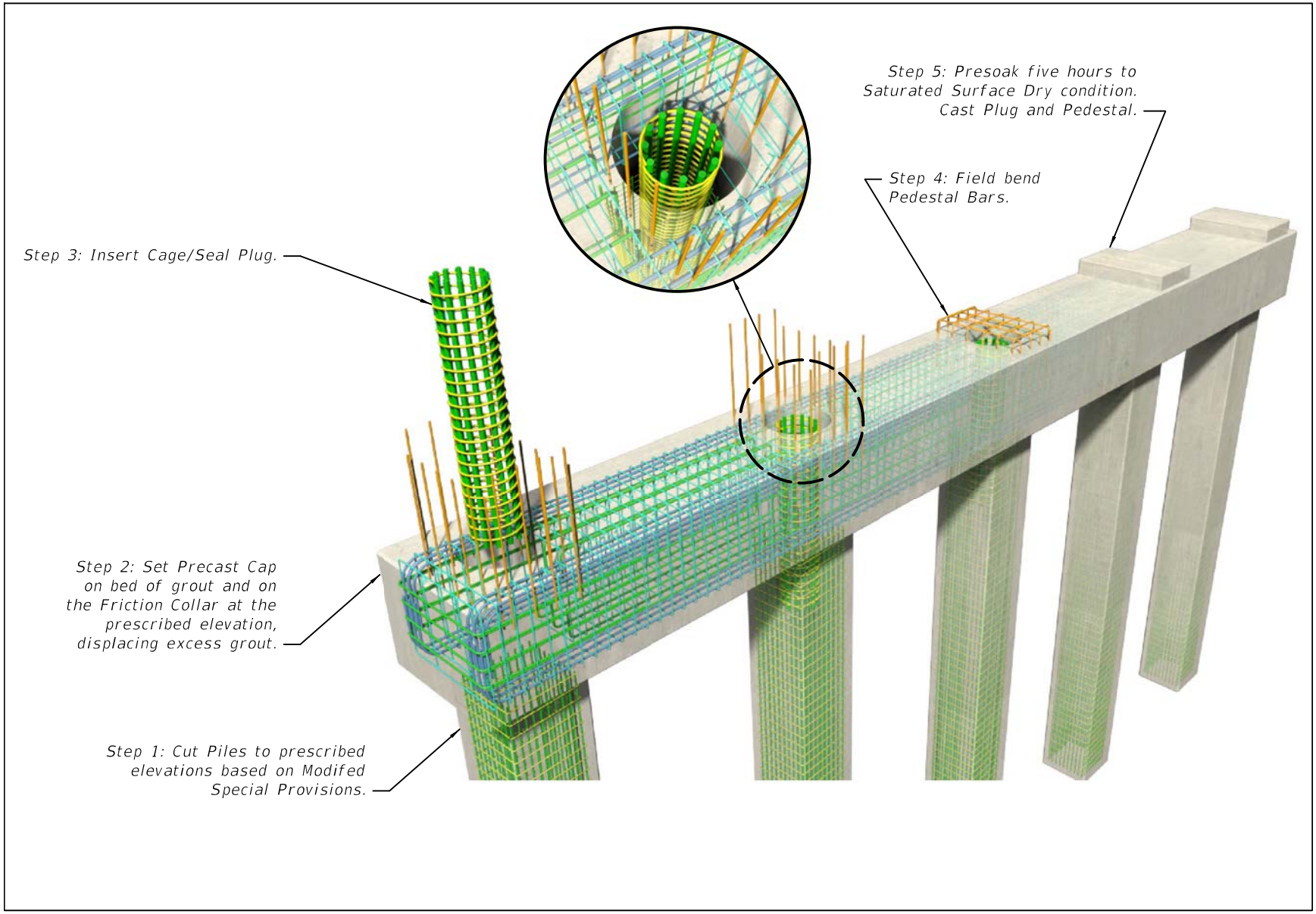

25.4.3.9 Bent Cap

A. Require Shop Drawings and an Erection Plan in the contract documents. See ***SDM*** 25.5 for items to be included.

B. Require one full-scale mock-up of a single pile-to-cap connection prior to fabrication of components. Mock-up fabrication and acceptance standards shall be identified in the contract documents.

C. Size the precast cap for equipment and boom reach using a site specific construction access assessment. For over-land projects, include a haul route assessment when sizing the cap.

D. The shear key can be formed with a removable corrugated pipe. Size ribs for interface shear transfer without the need for reinforcement through interface. Use a hard pocket former with a compressible liner to mitigate shrinkage cracks.

E. Require friction collars on piles to support cap prior to grouting. Do not use shims to support cap due to the small bearing area they provide and because they tend to block the flow of grout resulting in an insufficiently grouted interface.

F. Prepare all surfaces for in-fill concrete.

   Sand or water blast all interfacing surfaces. After sealing void with first-phase grouting, fill void with water for 4 to 5 hours. Remove water to a saturated surface dry (SSD) condition prior to making the concrete pour.

Figure 25.4.3.9-1 Bent Cap Details

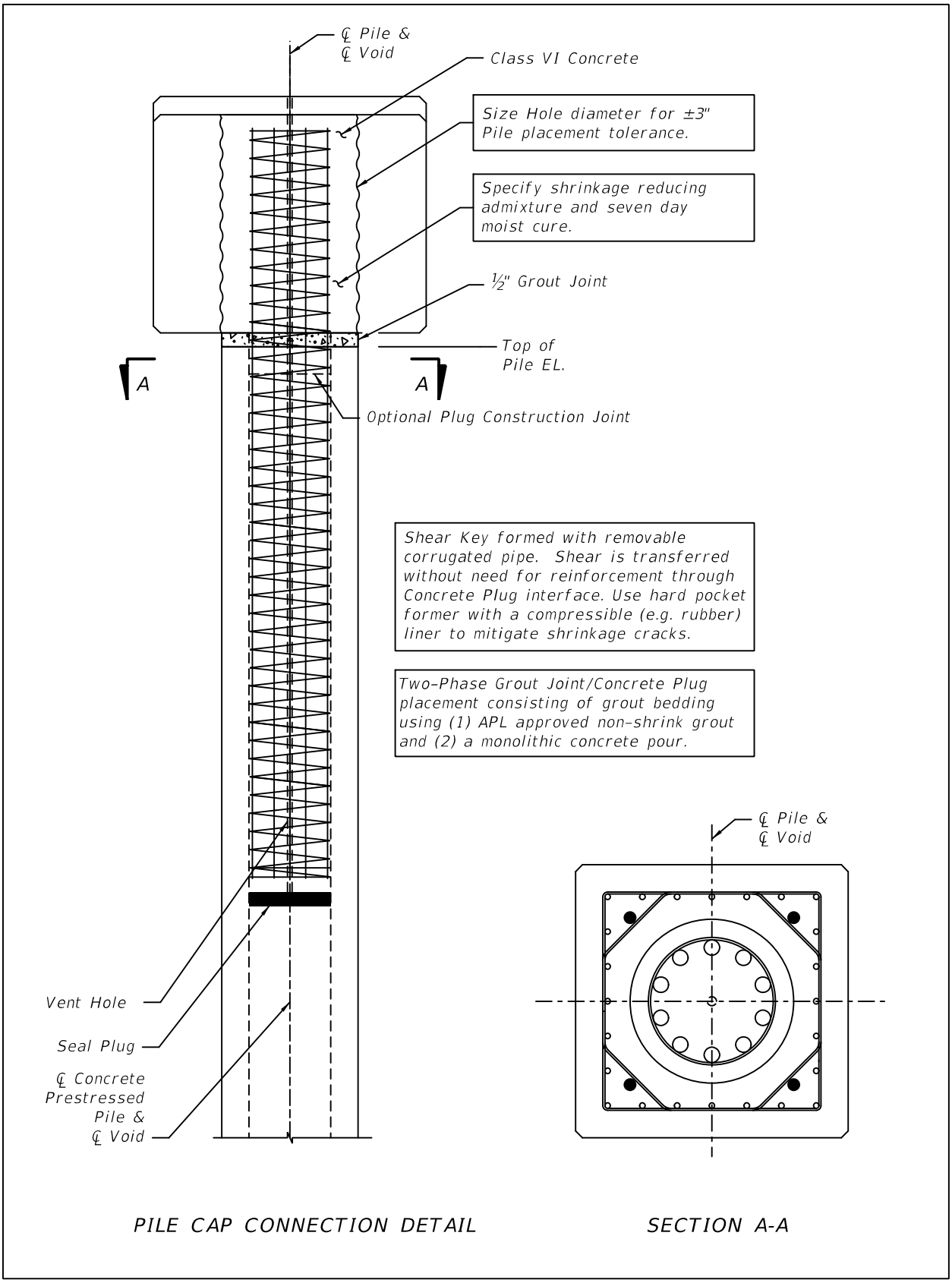

25.4.3.10 Slab Beam (Rev. 01/17)

A. Require Shop Drawings and an Erection Plan in the contract documents. See ***SDM*** 25.5 for items to be included.

B. At beam supports, inset bearings from the backwall and include the end pour with a C.I.P. composite topping to facilitate expansion joint fit-up.

C. Provide flexibility in bearing design for beam placement to better accommodate shrinkage of C.I.P. topping.

Figure 25.4.3.10-1 Precast Slab Beam (1 of 2)

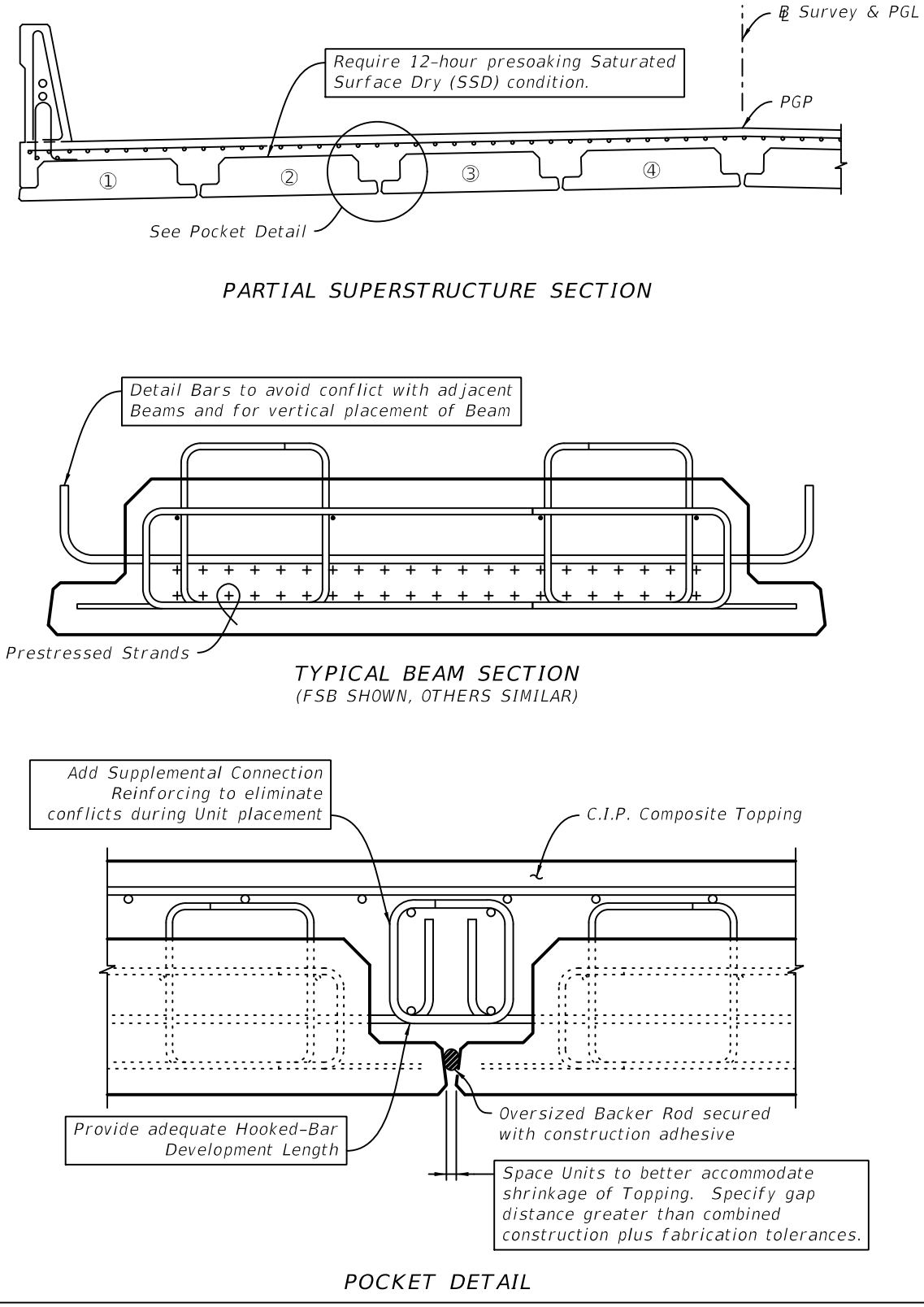

Figure 25.4.3.10-2 Precast Slab Beam (2 of 2)

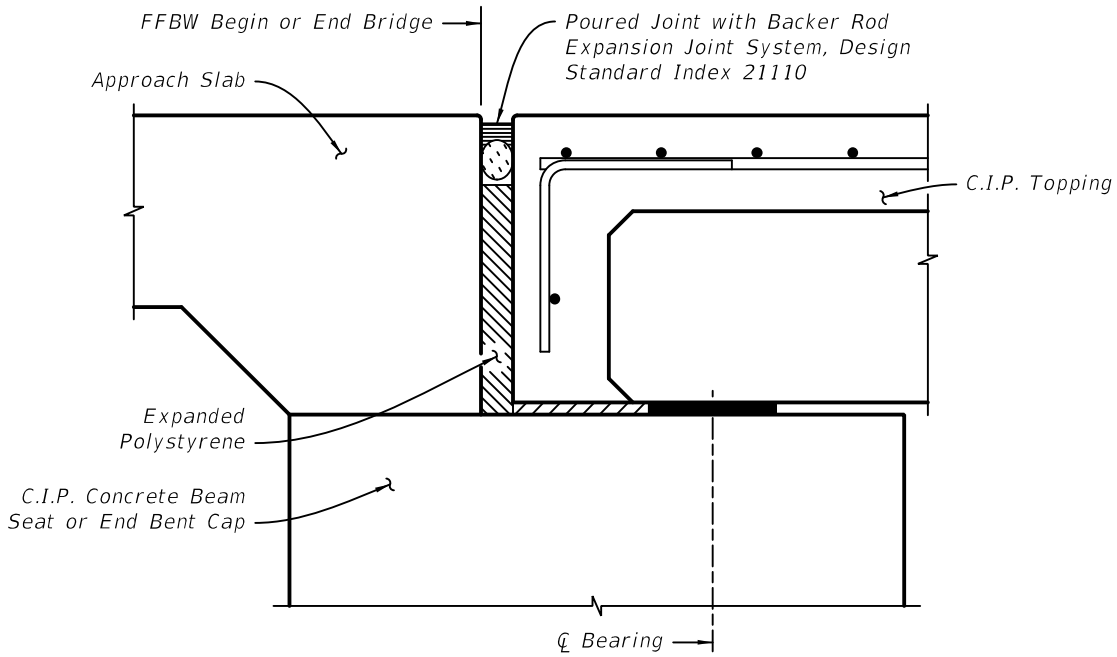

JOINT DETAIL AT BEGIN/END BRIDGE AT ℄ BEAM

25.5 PBES CONSTRUCTION SPECIFICATIONS

PBES components and connections can vary significantly from project to project depending on the PBES system utilized. Therefore, Technical Special Provisions (TSP), Modified Special Provisions (MSP) and/or Developmental Specifications are generally required. A TSP or MSP for PBES includes, but is not limited to, the following:

A. Component fabrication tolerances and construction tolerances which are consistent with joint types, joint widths, size of connection pockets, etc.

B. Shop drawing submittal requirements for the following:

   1. Lifting inserts, hardware, and device locations.
   2. Details of leveling inserts, or shims.
   3. Requirements for curing, handling, storing, transporting and erecting PBES components. Include surface preparation requirements.
   4. Post-tensioning hardware and grouted reinforcing sleeve coupler requirements.
   5. Grout or in-fill concrete material requirements.
   6. Component erection marks.

C. Erection Plan submittal requirements for the following:

1. A plan of the work area showing all substructure units and foundations; surface roads and railroads; all streams, creeks and rivers; and all overhead and underground utilities.
2. The erection sequence for all primary load-carrying members and all primary load-carrying member bracing. Note any and all permanent or temporary support and/or bracing locations, including crane-holding positions.

Commentary: The Engineer of Record shall check the stability of the precast components in the erected condition and calculate the bracing locations and forces based on construction wind loads and other assumed construction loads. The sequence of construction sheets should include schematic sketches of all primary bracing, bracing locations and forces in the plans indicating when bracing is to be installed and removed. The Contractor and the Specialty Engineer will work together to produce the design of the bracing system based on forces given by the Engineer of Record.

3. Details of all equipment to be used to lift precast components including cranes, excavators, lifting slings, sling hooks, jacks, etc. Include crane locations, crane pick points, crane radius of operation, lifting calculations, etc.
4. Computations to demonstrate structural adequacy of retaining walls in the vicinity of crane placement.
5. Computations to indicate the magnitude of stress in the prefabricated components during erection is within allowable limits.
6. Methods for providing temporary support of the elements. Include methods of adjusting, bracing and securing the element after placement.

Commentary: Show maximum allowable vertical displacements of the temporary supports in the plans as required for fit up, alignment, and stability, or where excessive settlements would affect stresses of the permanent structure.

When temporary supports are required, show locations and associated loads in the plans.

7. Procedures for controlling tolerance limits.
8. Methods for forming closure pours, pockets and sealing lifting holes.
9. Methods for preparing interfacing surface of PBES components prior to making connections.
10. Methods for curing grout and in-fill concrete. For proprietary products, follow manufacturer's recommended printed instructions.
11. Component erection marks indicating the component location within the final structure, orientation, and order in the erection sequence.

Commentary: Consider requiring all precast components to be stamped in the precast yard on the eastern-most end or southern-most end of each component to denote orientation in the final structure.

D. Specify in-fill or joint materials and curing requirements. For proprietary grout and concrete in-fill materials, specify curing requirements be in accordance with the manufacturer's recommendations.

E. Require surface preparation of precast component surfaces be made prior to making connections.

F. Specify the Contractor is responsible for handling and storage of components in such a manner that does not cause excessive stress in the component. Require the Contractor to submit a handling and storage plan with the Erection Plan prior to fabrication of the component. The contractor may choose alternative lifting devices and submit plan and handling stress calculations to the Designer for approval prior to fabrication of the component.

G. Include a section addressing non-complying products, repair methods and materials, and repair submittal requirements. See ***Specifications*** Sections 450-12 through 450-15 and modify as required for precast members.

H. Specify that the casting of precast segments shall not begin until the Engineer approves the relevant shop drawings, calculations, casting manuals, concrete forms, concreting operations, and post-tensioning system components and layout if different from that on the Contract Plans. Approval of any post-tensioning stressing elongations and forces for field erection operations is not required at this stage but is required prior to erection.

VOLUME 2 - REVISION HISTORY

I.2 .....Updated cross reference to CADD Manual in Paragraph D.

I.4 .....Updated cross reference to CADD Manual in Paragraph C.

2.12 .....Updated cross reference to CADD Manual in Paragraph E.

2.16 .....Revised Figure 2.16-1 to show single-slope traffic railing.

3.1 .....Updated cross reference to CADD Manual in Paragraphs D and E.

3.5 .....Updated cross reference to CADD Manual in 1st Paragraph and MNCP box.

3.8 .....Updated cross reference to CADD Manual.

4.1 .....Updated cross reference to CADD Manual in Paragraph B.

4.4 .....Revised Figures 4.4-1, 4.4-2 and 4.4-4 to show single-slope traffic railings.

5.2 .....Revised Paragraph F.3 to reflect new wind speed requirements; Revised Paragraph F4 to specify 600 kip force; Revised Paragraph G to specify Grade 60 carbon steel.

6.1 .....Clarified that links provide access to .dgn and .pdf files of design aids and added image with link to .pdf in Paragraph B.

13.8 .....Revised Figures 13.8-1, 13.8-2 and 13.8-3 to show single-slope traffic railings.

13.10 .....Revised Figures 13.10-1 and 13.10-3 to show single-slope traffic railings.

13.11 .....Revised Figure 13.11-1 to show single-slope traffic railings.

15.5 .....Revised Figure 15.5-4 Note #3 and Detail B.

15.8 .....Revised Figure 15.8-3 to show single-slope traffic railings; Revised Figure 15.8-5 View B-B.

15.9 .....Revised Figures 15.9-3 and 15.9-5 to show single-slope traffic railings; Revised weld note in Figures 15.9-4 and 15.9-6.

16.8 .....Revised Figure 16.8-1 to show single-slope traffic railings.

18.2 .....Revised Figure 18.2-3 to show single-slope traffic railings.

18.5 .....Revised Figure 18.5-1 to show single-slope traffic railings.

19.2 .....Clarified requirements for wall control drawings in 1st Paragraph and MNCP Box.

19.6 .....Revised Figures 19.6-2, 19.6-3 and 19.6-4 to show single-slope traffic railings.

19.6.1 .....Revised Figures 19.6.1-2, 19.6.1-3 and 19.6.1-4 to show single-slope traffic railings.

19.7 .....Added cross reference to PPM.

19.7.2 .....Clarified requirements of 3rd Paragraph and deleted MNCP box; Revised Figure 19.7.2-1 to show single-slope traffic railings.

20.8 .....Revised Section and added Figures 20.8-1 through 20.8-10 per SDB 16-07 with subsequent modifications.

22.2 .....Revised Figures 22.2-2, 22.2-3 and 22.2-4 to show single-slope traffic railings.

22.3 .....Revised Figure 22.3-1 to show single-slope traffic railings.

22.3.1 .....Revised Figure 22.3.1-1 to show single-slope traffic railings.

23.7 .....Revised Paragraph C, Figures 23.7-1 and 23.7-2 and added Figures 23.7-3 and 23.7-4 per SDB 16-07.

25.4.3.5 .....Revised Figure 25.4.3.5-1 to reflect use of Flexible Filler.

25.4.3.10 .....Revised Figure 25.4.3.10-1 to show single-slope traffic railing.