Structures Design Guidelines – July 2004

Table of Contents

Introduction 1
I.1 General 1
I.2 Format 1
I.3 Authority 1
I.4 Scope 1
I.5 Abbreviations 1
I.6 References 2
I.7 Coordination 2
I.8 Distribution 3
I.9 Administrative Management 3
I.9.1 The Technical Advisory Group (TAG) 3
I.9.2 SDO Staff 3
I.10 Modifications 3
I.10.1 Adoption of Revisions 3
I.10.2 Temporary Design Bulletins 3
I.10.3 Permanent Revisions 4
I.11 Training 4
Chapter 1 General Requirements 5
1.1 General 5
1.1.1 Design Review 5
1.1.2 Substructure and Superstructure Definitions 5
1.1.3 Vertical Clearances 5
1.1.4 Bridge Height Classifications 5
1.2 Criteria for Deflection and Span-to-Depth Ratios [2.5.2.6] 5
1.3 Environmental Classifications 5
1.3.1 Substructure 6
1.3.2 Superstructure 6
1.3.3 Chloride Content 6
1.4 Concrete and Environment [5.12.1] 9
1.4.1 Cover 9
1.4.2 Class and Admixtures 9
1.5 Existing Hazardous Material 16
1.6 Adhesive Anchor Systems 16
1.6.1 General 16
1.6.2 Notation 16
1.6.3 Design Requirements for Tensile Loading 18
1.6.4 Design Requirements for Shear Loading 18
1.6.5 Interaction of Tensile and Shear Loadings 18
Chapter 2 Loads and Load Factors 29
2.1 General 29
2.1.1 Load Factors and Load Combinations [3.4.1] 29
2.2 Dead loads 29
2.3 Seismic Provisions [3.10.9][3.10.9.2][4.7.4] 29
2.3.1 General 29
2.3.2 Seismic Design for New Construction 30
2.3.3 Seismic Design for Widenings 30
2.3.4 Lateral Restraint 30
2.4 Wind Loads 30
2.4.1 Wind Loads on Bridges [3.8.1] 30
2.4.2 Wind Loads on Other Structures 30
2.4.3 Wind Loads During Construction 30
2.5 Miscellaneous Loads [3.5.1] 31
2.6 Vehicular Collision Force [3.6.5] 31

2.7 Uniform Temperature [3.12.2] ... 31
2.7.1 Segmental Box Girders ... 31
2.7.2 Joints and Bearings ... 31
2.7.3 All Other Bridge Components ... 31
2.7.4 Temperature Gradient [3.12.3] ... 31
2.8 Barrier/Railing Distribution for Beam-Slab Bridges [4.6.2.2] ... 32
2.9 Load Distribution Beam-Slab Bridges [4.6.2.2] ... 32
2.9.1 Prestressed Concrete Inverted Tee Girder ... 33
2.9.2 Prestressed Concrete "U" Girder ... 33
2.10 Operational Importance [1.3.5] ... 34
2.11 Vessel Collision [3.14] ... 34
2.11.1 General [3.14.1] ... 34
2.11.2 Research and Information Assembly ... 34
2.11.3 Design Vessel [3.14.4][3.14.5.3] ... 35
2.11.4 Design Methodology - Damage Permitted [3.14.13] ... 35
2.11.5 Widenings ... 36
2.11.6 Movable Bridges ... 36
2.11.7 Main Span Length ... 36
2.11.8 Scour with Vessel Collision [3.14.1] ... 36
2.11.9 Application of Impact Forces [3.14.14] ... 36
2.11.10 Impact Forces on Superstructure [3.14.14.2] ... 39
2.12 Substructure Limit States ... 39
2.13 Pedestrian Live Load on Pedestrian Bridges ... 39
Chapter 3 Substructure and Retaining Walls ... 41
3.1 General ... 41
3.2 Geotechnical Report ... 41
3.3 - Foundation Scour Design [2.6] ... 42
3.4 Lateral Load [10.7.3.8][10.8.3.8] ... 42
3.5 Driven Piles ... 42
3.5.1 Cylinder Piles ... 42
3.5.2 Minimum Sizes ... 43
3.5.3 Spacing and Clearances [10.7.1.5] ... 43
3.5.4 Downdrag [10.7.14] ... 43
3.5.5 Resistance Factors [10.5.5] ... 43
3.5.6 Battered Piles [10.7.1.6] ... 43
3.5.7 Minimum Tip Elevation [10.7.1.11] ... 44
3.5.8 Anticipated Pile Lengths [10.7.1.10] ... 44
3.5.9 Test Piles [10.7.1.13] ... 44
3.5.10 Load Tests [10.7.3.6][10.8.3.6] ... 45
3.5.11 Pile Driving Resistance [10.7.1.3] ... 45
3.5.12 Pile Jetting and Preforming ... 46
3.5.13 Pile Data Table ... 46
3.5.14 Plan Notes ... 46
3.5.15 Prestressed Piling [5.13.4.3] ... 46
3.5.16 Fender Piles ... 47
3.5.17 Steel Sheet Piles ... 47
3.6 Drilled Shafts ... 48
3.6.1 Minimum Sizes ... 48
3.6.2 Downdrag ... 48
3.6.3 Resistance Factors [10.5.5] ... 48
3.6.4 Minimum Tip Elevation See SDG 3.5.7 ... 48
3.6.5 Load Tests SDG 3.5.10 ... 48
3.6.6 Drilled Shaft Data Table ... 48
3.6.7 Plan Notes ... 48
3.6.8 Construction Joints ... 49
3.7 Cofferdams and Seals ... 49

3.8 Spread Footing [10.5.5][01.6] ... 50
3.9 Mass Concrete [5.10.8.3] ... 50
3.10 Crack Control ... 50
3.11 Pier, Column, and Footing Design ... 51
3.12 Retaining Wall Types ... 52
3.12.1 Conventional Cast-in-Place (CIP) Walls ... 52
3.12.2 Pile Supported Walls ... 52
3.12.3 Mechanically Stabilized Earth (MSE) Walls ... 52
3.12.4 Precast Counterfort Walls ... 53
3.12.5 Steel Sheet Pile Walls ... 53
3.12.6 Concrete Sheet Piles ... 53
3.12.7 Wire Faced Walls ... 53
3.12.8 Soil Nails ... 53
3.12.9 Soldier Pile/Panel Walls ... 53
3.12.10 Modular Block Walls ... 54
3.12.11 Geogrid Soil Reinforcement for Retaining Walls ... 54
3.12.12 Permanent - Temporary Wall Combination ... 54
3.12.13 Hybrid - Gravity/MSE Wall ... 54
3.13 Retaining Wall Design ... 54
3.13.1 Earth Loads for Wall Design ... 54
3.13.2 Corrosion Rates [11.9.8.1] ... 54
3.13.3 Soil Reinforcement ... 55
3.13.4 External Stability ... 56
3.13.5 Acute corners less than 75 degrees (MSE Walls) ... 56
3.13.6 Minimum Wall embedment in Soil ... 57
3.13.7 Apparent Coefficient of Friction ... 57
3.13.8 Connections (MSE Walls) ... 57
3.13.9 End Bents behind MSE Walls ... 57
3.13.10 Facing Panels (MSE Walls) [11.9.5.1.6] ... 57
3.13.11 Utilities ... 57
Chapter 4 Superstructure - Concrete ... 79
4.1 General ... 79
4.1.1 Concrete Cover ... 79
4.1.2 Reinforcing Steel [5.4.3] ... 79
4.1.3 Girder Transportation ... 79
4.2 Concrete Deck Slabs [5.13.1][9.7] ... 79
4.2.1 Bridge Length Definitions ... 79
4.2.2 Deck Thickness Determination ... 79
4.2.3 Grooving Bridge Decks ... 80
4.2.4 Deck Slab Design [9.7.2][9.7.3] ... 80
4.2.6 Reinforcing Steel over Intermediate Piers or Bents ... 82
4.2.7 Minimum Negative Flexure Slab Reinforcement [6.10.3.7] ... 82
4.2.8 Crack Control in Continuous Superstructures [5.10.8] ... 82
4.2.9 Structures Continuous for Live Load ... 83
4.2.10 Concrete Decks on Continuous Steel Girders ... 83
4.2.11 Skewed Decks [9.7.1.3] ... 83
4.2.12 Temperature and Shrinkage Reinforcement ... 83
4.2.13 Stay-in-Place Forms ... 83
4.3 Pretensioned Beams ... 83
4.3.1 General ... 83
4.3.2 Beam Camber/Build-Up over Beams ... 85
4.3.3 Florida Bulb-Tee Beams [5.14.1.2.2] ... 85
4.4 Precast, Prestressed Slab Units [5.14.4.3] ... 85
4.5 Post-Tensioning, General [5.14.2] ... 85
4.5.1 Integrated Drawings ... 85
4.5.2 Prestress ... 86

4.5.3 Material ... 86
4.5.4 Expansion Joints ... 86
4.5.5 Ducts and Tendons ... 87
4.5.6 Minimum Dimensions ... 89
4.5.7 Corrosion Protection ... 89
4.5.8 Erection Schedule and Construction System ... 90
4.5.9 Final Computer Run ... 90
4.5.10 Epoxy Joining of Segments ... 90
4.5.11 Principal Tensile Stresses ... 90
4.6 Post-Tensioned Box Girders ... 91
4.6.1 General ... 91
4.6.2 Access and Maintenance ... 91
4.6.3 Prestress ... 92
4.6.4 Post-tensioning Anchorages ... 92
4.6.5 Thermal Effects [5.14.2.3.5] ... 93
4.6.6 Creep and Shrinkage [5.14.2.3.6] ... 93
4.6.7 Expansion Joints ... 93
4.6.8 Construction Data Elevation and Camber Curve for Box Girders ... 94
4.6.9 Transverse Deck Analysis & Design ... 94
Chapter 5 Superstructure - Steel ... 97
5.1 General ... 97
5.1.1 Girder Transportation ... 97
5.2 Dead Load Camber [6.7.2] ... 97
5.3 Structural Steel [6.4.1] ... 97
5.3.1 General ... 97
5.3.2 Testing ... 97
5.4 Bolts [6.4.3.1] ... 98
5.5 Minimum Steel Dimensions [6.7.3] ... 98
5.6 Box Sections ... 98
5.6.1 General ... 98
5.6.2 Access and Maintenance ... 98
5.6.3 Cross Frames [6.7.4] ... 99
5.6.4 Lateral Bracing [6.7.5] ... 99
5.6.5 Transverse Concrete Deck Analysis ... 99
5.7 Diaphragms and Cross Frames for "I-Girders" [6.7.4] ... 100
5.8 Transverse Intermediate Stiffeners [6.10.8.1] ... 100
5.9 Bearing Stiffeners [6.10.8.2] ... 100
5.10 Longitudinal Stiffeners [6.10.8.3] ... 100
5.11 Connections and Splices [6.13] ... 100
5.11.1 Slip Resistance [6.13.2.8] ... 101
5.11.2 Welded Connections [6.13.3] ... 101
5.11.3 Welded Splices [6.13.6.2] ... 101
5.12 Corrosion Protection ... 101
5.12.1 Uncoated Weathering Steel ... 101
5.12.2 Single Coat Inorganic Zinc ... 102
5.12.3 Galvanizing ... 102
Chapter 6 Superstructure Components ... 103
6.1 General ... 103
6.2 Curbs and Medians [13.11] ... 103
6.3 Temperature Movement [3.12.2] ... 103
6.4 Expansion Joints ... 103
6.4.1 Expansion Joint Provisions [14.5.1] ... 104
6.4.2 Movement [14.4] [14.5.3] ... 104
6.4.3 Joints for Bridge Widening ... 104
6.4.4 Lengthening Group 1 Joints ... 105
6.4.5 Widenings - Group 2 Joints ... 105

6.4.6 Post Tension Bridges.....See 4.8.7 Expansion Joints 105
6.5 Bearings 105
6.5.1 Design 106
6.5.2 Maintainability 106
6.5.3 Lateral Restraint 106
6.6 Deck Drainage [2.6.6] 107
6.6.1 Deck Drains 107
6.6.2 Drain Conveyances 107
6.7 Traffic Railing [13.7] 107
6.7.1 General 107
6.7.2 Non-Standard or New Railing Designs 108
6.7.3 FHWA Policy 109
6.7.4 Existing Obsolete Traffic Railings 109
6.7.5 Historic Bridges 113
6.7.6 Requirements for Test Levels 5 and 6 [13.7.2] 114
6.7.7 Exceptions 114
6.7.8 Sound Barriers 114
Chapter 7 Widening and Rehabilitation 115
7.1 General 115
7.1.1 Load Rating 115
7.1.2 Bridge Deck - See Chapter 4. 115
7.1.3 Expansion Joints - See Chapter 6. 115
7.1.4 Traffic Railing - See Chapter 6. 115
7.2 Classifications and Definitions 115
7.2.1 Major Widening 115
7.2.2 Minor Widening 115
7.3 Analysis and Design 115
7.3.1 Aesthetics 115
7.3.2 Materials 115
7.3.3 Load Distribution 115
7.3.4 Specifications 116
7.3.5 Overlays 116
7.3.6 Substructure 116
7.3.7 Other Special Considerations 116
7.4 Attachment to Existing Structure 116
7.4.1 Drilling 116
7.4.2 Dowel Embedments 116
7.4.3 Surface Preparation 116
7.4.4 Connection Details 117
7.5 Construction Sequence 122
7.6 Widening Rules 122
7.7 Deck Grooving 122
7.7.1 Penetrant Sealers 123
Chapter 8 Movable Bridges 125
8.1 General 125
8.1.1 Applicability 125
8.1.2 Redundancy 125
8.1.3 Trunnion Support Systems 126
8.1.4 Vertical Clearance Requirements 126
8.1.5 Horizontal Clearance Requirements 126
8.1.6 Tender Parking 126
8.1.7 Definitions and Terms 126
8.1.8 Movable Bridge Terminology 126
8.2 Construction Specifications and Design Calculations 127
8.3 Special Strength Load Combination [2.4.2.2] 127
8.4 Speed Control for Leaf-driving Motors 127

8.4.1 Requirements for Mechanical Drive Systems 127
8.4.2 Requirements for Hydraulic Drive Systems 127
8.5 Machinery Systems 127
8.5.1 Trunnions and Trunnion Bearings 127
8.5.2 Racks and Girders 128
8.5.3 Span Balance [1.5] 128
8.5.4 Speed Reducers 128
8.5.5 Open Gearing 129
8.5.6 Span Locks [6.8.1.5.1] 129
8.5.7 Brakes 130
8.5.8 Couplings 130
8.5.9 Clutches 130
8.5.10 Bearings (Sleeve and Anti-Friction) 130
8.5.11 Anchors 131
8.5.12 Fasteners 132
8.6 Hydraulic Systems 133
8.6.1 Hydraulic Pumps 133
8.6.2 Cylinders 133
8.6.3 Control Components 133
8.6.4Hydraulic Lines 134
8.6.5 Miscellaneous Hydraulic Components 134
8.7 Electrical [AASHTO 8] 134
8.7.1 Electrical Service [AASHTO 8.1] 134
8.7.2 Alternating Current Motors [AASHTO 8.5] 135
8.7.3 Engine Generators [AASTHO 8.3.9] 135
8.7.4 Automatic Transfer Switch [AASHTO 8.3.8] 135
8.7.5 Electrical Control [AASHTO 8.4] 135
8.7.6 Motor Controls [AASHTO 8.6] 136
8.7.7 Programmable Logic Controllers [AASHTO 8.4.2.3] 136
8.7.8 Limit and Seating Switches [AASHTO 8.4.1] 136
TRAFFIC GATE LIMIT SWITCHES 138
8.7.9 Safety Interlocking [AASHTO 8.4.1] 142
8.7.10 Instruments [AASHTO 8.4.5] 142
8.7.11 Control Console [AASHTO 8.4.6] 142
8.7.12 Electrical Connections between Fixed and Moving Parts 143
8.7.13 Electrical Connections across the Navigable Channel 143
8.7.14 Service Lights [AASHTO 8.11] 143
8.7.15 Navigation Lights [AASHTO 1.4.4.6.2] 143
8.7.16 Grounding and Lightning Protection [AASHTO 8.12 and 8.13] 143
8.7.17 Movable Bridge Traffic Signals and Safety Gates [AASHTO 1.4.4] 143
8.7.18 Communications Systems [N/A] 144
8.7.19 Functional Checkout 144
8.7.19 Functional Checkout Tests 144
8.8 Control House Architectural Design 146
8.8.1 General 146
8.8.2 Site Water Lines 147
8.8.3 Site Sanitary Sewage System 147
8.8.4 Stairs, Steps and Ladders 147
8.8.5 Handrails, Railing and Grating 147
8.8.6 Framing and Sheathing 147
8.8.7 Desktop and Cabinet 148
8.8.8 Insulation 148
8.8.9 Fire-Stopping 148
8.8.10 Roof 148
8.8.11 Doors and Hardware 148
8.8.12 Windows 149

8.8.13 Veneer Plaster (Interior Walls) ... 149
8.8.14 Gypsum Board (Interior Walls) ... 149
8.8.15 Floor Tile ... 149
8.8.16 Epoxy Flooring ... 149
8.8.17 Painting ... 149
8.8.18 Wall Louvers ... 150
8.8.19 Toilet and Bath Accessories ... 150
8.8.20 Equipment and Appliances ... 150
8.8.21 Furnishings ... 150
8.8.22 Pipe and Fittings ... 150
8.8.23 Plumbing Fixtures ... 150
8.8.24 Heating, Ventilating and Air Conditioning ... 150
8.8.25 Interior Luminaires ... 151
8.8.26 Video Equipment ... 151
8.9 Maintainability ... 151
8.9.1 General ... 151
8.9.2 Trunnion Bearings ... 151
8.9.3 Span-Jacking of New Bridges ... 151
8.9.4 Trunnion Alignment Features ... 152
8.9.5 Lock Systems ... 152
8.9.6 Machinery Drive Systems ... 152
8.9.7 Lubrication Provisions ... 152
8.9.8 Drive System Bushings ... 152
8.9.9 Local Switching ... 152
8.9.10 Service Accessibility ... 152
8.9.11 Service Lighting and Receptacles ... 153
8.9.12 Communications ... 153
8.9.13 Wiring Diagrams ... 153
8.9.14 Diagnostic Reference Guide for Maintenance ... 153
8.9.15 Navigation Lights ... 153
8.9.16 Working Conditions for Improved Maintainability ... 153
8.9.17 Weatherproofing ... 153
Chapter 8 Movable Bridge Figures ... 154
Chapter 9 BDR Cost Estimating ... 159
9.1 General ... 159
9.2 BDR Bridge Cost Estimating ... 159
9.2.1 Substructure ... 159
9.2.2 Superstructure ... 160
9.2.3 Design Aid for Determination of Reinforcing Steel ... 162
9.3 Historical Bridge Costs ... 163
9.3.1 Deck/Girder Bridges ... 163
9.3.2 Post - tensioned Concrete Box Girder, Segmental Bridges ... 164
9.3.3 Post-tensioned Cast-in-place Concrete Box Girder Bridge (low level overpass) ... 165
9.3.4 Bascule Bridge Cost ... 165

Introduction

I.1 General

A. These FDOT Structures Design Guidelines, (***SDG***) incorporate technical design criteria and include additions, deletions, or modifications to the requirements of the ***AASHTO/LRFD Bridge Design Specifications, Second Edition, 1998 with interims through 2003 (LRFD)***.

B. This manual provides engineering standards, criteria, and guidelines for developing and designing bridges and retaining walls for which the Structures Design Office (SDO) and District Structures Design Offices (DSDO) have overall responsibility.

C. Information on overhead sign structures, high-mast light poles, and miscellaneous roadway appurtenances as well as general administrative, geometric, shop drawing, and plans processing may be found in the ***Plans Preparation Manual***.

I.2 Format

A. The ***SDG*** chapters are organized more by "component," "element," or "process" than by "material" as is the ***LRFD***. As a result, the chapter numbers and content of the ***SDG*** do not necessarily align themselves in the same order or with the same number as ***LRFD***. ***LRFD*** references are provided to quickly coordinate and associate ***SDG*** criteria with that of ***LRFD***. The ***LRFD*** references may occur within article descriptions, the body of the text, or in the commentary and are shown in boldface type within brackets; i.e., **[1.3], [8.2.1].**

B. The ***SDG*** are written in the active voice to structural designers, Professional Engineers, Engineers of Record, Structural Engineers, and Geotechnical Engineers engaged in work for the Florida Department of Transportation.

I.3 Authority

Section 334.044(2), Florida Statutes.

I.4 Scope

The use of this manual is required of anyone performing structural design or analysis for the Florida Department of Transportation.

I.5 Abbreviations

AISC	American Institute of Steel Construction
AREMA	American Railway Engineering and Maintenance-of-Way Association
AWS	American Welding Society
DSDE	District Structures Design Engineer
DSDO	District Structures Design Office
FHWA	Federal Highway Administration
FDOT	Florida Department of Transportation
LRFD	Load and Resistance Factor Design
PPM	Plans Preparation Manual
SDG	Structure Design Guidelines
SDO	Structures Design Office
SSDE	State Structures Design Engineer
SSPC	Steel Structures Painting Council
TAG	Technical Advisory Group
TDB	Temporary Design Bulletin

Abbreviations in the ***PPM.***

I.6 References

Use the ***SDG*** in conjunction with the following documents:

AASHTO Publications
ANSI/AASHTO/AWS D1.5-2002 Bridge Welding Code (2002)
Construction Handbook for Bridge Temporary Works (1995)
Guide Design Specifications for Bridge Temporary Works (1995)
Guide Specifications for Design and Construction of Segmental Concrete Bridges, 2nd Edition (1999),
Guide Specifications for Design of Pedestrian Bridges (1997)
Guide Specifications for Horizontally Curved Steel Girder Highway Bridges (2002)
Guide Specifications for Structural Design of Sound Barriers (1989)
LRFD Bridge Construction Specifications, 1st Edition (1998)
LRFD Bridge Design Specification, 2nd Edition (1998)
LRFD Movable Highway Bridge Design Specifications, 1st Edition. (2001)
Standard Specifications for Structural Supports for Highway Signs, Luminaires and Traffic Signals (1994)

FDOT Publications
Plans Preparation Manual, Volume 1 (Topic No.: 625-000-007)
Plans Preparation Manual, Volume 2 (Topic No.: 625-000-008)
Detailing Manual (Topic No.: 625-020-200)
Drainage Manual (Topic No.: 625-040-001)
Standard Drawings (Topic No.: 625-020-300)
CADD Production Criteria Handbook
FDOT Standards for Road and Bridge Construction.

Other Publications
AISC LRFD Manual of Steel Construction - Third Edition

FHWA-NHI-00-043 Mechanically Stabilized Earth Walls and Reinforced Soil Slopes Design and Construction Guidelines

AREMA Manual for Railway Engineering

I.7 Coordination

A. Coordinate all plans production activities and requirements between the ***SDG***, ***SDM***, ***PPM***, and ***LRFD***. Each of these documents has criteria pertaining to bridge or structures design projects, and, normally, all three must be consulted to assure proper completion of a project for the Department.

B. Direct all questions concerning the applicability or requirements of any of these or other referenced documents to the appropriate Structures Design Engineer.

I.8 Distribution

This SDG is furnished via the SDO web page at no charge. The user must regularly check for additions, modifications and bulletins. Address questions regarding this manual and any modifications to:

Structures Design Office
Mail Station 33
Attn: Structures Manual Editor
605 Suwannee Street
Tallahassee, Florida 32399-0450
Tel.: (850) 414-4255
http://www.dot.state.fl.us/structures/

I.9 Administrative Management

Administrative Management of the ***Structures Design Guidelines (SDG)*** is a cooperative effort of SDO staff and the nine voting members of the Technical Advisory Group (TAG).

I.9.1 The Technical Advisory Group (TAG)

The TAG provides overall guidance and direction for the ***SDG*** and has the final word on all proposed modifications. The TAG comprises the State Structures Design Engineer (SSDE) and the eight District Structures Design Engineers (DSDE). In matters of technical direction or administrative policy, when unanimity cannot be obtained, each DSDE has one vote, the SSDE has two votes, and the majority rules.

I.9.2 SDO Staff

SDO Staff comprises the Assistant State Structures Design Engineers and Senior Structures Design Engineers selected by the SSDE.

I.10 Modifications

Modifications may be the result of changes in FDOT specifications, FDOT organization, Federal Highway Administration (FHWA) regulations, and AASHTO requirements; or occur from recent experience gained during construction, through maintenance, and research. Manual users are encouraged to suggest modifications and improvements such as design procedures, text clarity, technical data, or commentary. Transmit suggestions in writing to the State Structures Design Engineer, 605 Suwannee St, (MS 33) Tallahassee, FL 32399-0450.

I.10.1 Adoption of Revisions

Revisions to the ***SDG*** are issued by the SDO as Temporary Design Bulletins or Permanent Revisions according to a formal adoption process.

I.10.2 Temporary Design Bulletins

A. ***TDB's*** are mandatory, supersede the current ***SDG,*** and will be issued when the SSDE deems a change essential to production or structural integrity issues and in need of immediate implementation. ***TDB's*** may address issues in plans production, safety, structural design methodology, critical code changes, or new specification requirements.

B. ***TDB's*** are effective for up to 360 calendar days unless superceded by subsequent ***TDB's*** or Permanent Revisions to the SDG. ***TDB's*** automatically become proposed Permanent Revisions unless withdrawn from consideration by the SSDE.

C. ***TDB's*** indicate their effective date of issuance, include the reference Topic Number, and are numbered sequentially with reference to both the ***SDG*** version number and year of issuance. For example, Temporary Design Bulletin No. C98-2 would be the second Bulletin issued in 1998 for ***SDG***.

I.10.3 Permanent Revisions

Permanent Revisions to the manual are made semi-annually or "as-needed." If the SDO considers an individual revision, or an accumulation of revisions, to be substantive, the manual may be completely rewritten. The following steps are required for adoption of a revision.

A. SDO Staff will assess proposed revisions and develop the initial draft for the SSDE's approval.

B. The SDO Staff will conduct the necessary research, coordinate the proposed modification with all other affected offices and, if the proposed modification is deemed appropriate, prepare a complete, written modification with any needed commentary. The SSDE's approval signifies the SDO's position on the proposed modifications.

C. Proposed modifications will be transmitted to TAG members and others allowing for no less than two weeks review time before the next scheduled TAG meeting. Other parties include, but are not limited to: State Construction Office, State Maintenance Office, State Materials Office, State Roadway Design Office, Organization, Forms and Procedures, and FHWA. DSDE members of TAG will coordinate the proposed modifications with all other appropriate offices at the district level.

D. Each TAG member will review proposed modifications before the meeting where they will be brought forward for discussion. The SDO will review all modification comments received from other FDOT/FHWA offices in preparation for presentation at the meeting. Additional review comments received by the SDO and/or DSDO's during the review process will be presented for discussion and resolution.

E. Immediately after the TAG meeting, each proposed modification will be returned to the SDO with one of the following recommendations:
   1.) Recommended for adoption as presented.
   2.) Recommended for adoption with resolution of specific changes.
   3.) Not recommended for adoption.

F. Within two weeks after the TAG meeting, the SDO Staff will resolve each recommended modification and the assembled modifications will be provided to the SSDE for final approval.

G. Once approved by the SSDE, the ***SDG*** revision modifications will be assigned to the Design Technology Group Leader for final editing.

H. Unless agreed otherwise, the ***SDG*** version modifications will be distributed within 4 weeks after receipt of the approved modifications from the SSDE. This period allows the Organization and Procedures Office to update the Standard Operating System and any electronic media before electronic distribution of the ***SDG***.

I.11 Training

No specific training is necessary for the use of this manual. Major revisions are often presented and discussed at the Biennial Structures Design Conference, annual Construction Conference, and annual ***PPM*** update training.

Chapter 1 General Requirements

1.1 General

This Chapter clarifies, supplements, and contains deviations from the information in ***LRFD*** Sections [2], [5], and [6]. These combined requirements establish material selection criteria for durability to meet the 75-year design life requirement established by the Department.

1.1.1 Design Review

Category 1 structures will be reviewed by the DSDE and Category 2 structures will be reviewed by the SSDE. See the ***PPM*** Chapter 26.

1.1.2 Substructure and Superstructure Definitions

See the substructure and superstructure definitions in the FDOT ***Standard Specifications for Road and Bridge Construction***, Section 1-3 Definitions, and note the following:

A. Box culverts, retaining wall systems (including MSE walls), sound barriers on structures and bulkheads are substructures.

B. Approach slabs are superstructure; however, Class II Concrete (Bridge Deck) will be used for all environmental classifications.

1.1.3 Vertical Clearances

A. The vertical clearance of bridges over water is the minimum distance between the underside of the superstructure and the normal high water (NHW) for navigable water crossings or the mean high water (MHW) for coastal crossings. When applicable, vertical clearance is measured at the inside face of the fender system.

B. The vertical clearance for grade separations over roads or railroads is the minimum distance between the underside of the superstructure and road or railroad.

1.1.4 Bridge Height Classifications

FDOT classifications of bridges over water are based on the following vertical clearances:

A. Low Level - less than 20 feet.

B. Medium Level - 20 feet or greater but less than 45 feet.

C. High Level - 45 feet or greater.

1.2 Criteria for Deflection and Span-to-Depth Ratios [2.5.2.6]

Apply the criteria for Span-to-Depth Ratios in ***LRFD*** **[2.5.2.6.3]**. The criteria for deflection in ***LRFD*** **[2.5.2.6.2]** and **[3.6.1.3.2]** only apply for the design of bridges with pedestrian traffic or bridges where vehicular is expected to queue.

1.3 Environmental Classifications

A. The District Materials Engineer or the Department's Environmental/Geotechnical Consultant will environmentally classify all new bridge sites. Environmental classification is required for major widenings (see definitions in Chapter 7) and may be required for minor widenings. This determination will be made before or during the development of the Bridge Development Report (BDR)/30% Plans Stage, and the results will be included in the documents. The bridge site will be tested, and separate classifications determined for superstructures and substructures.

B. In the bridge plans "General Notes," include the environmental classification for both the superstructure and substructure according to the following classifications:
   1.) Slightly Aggressive
   2.) Moderately Aggressive
   3.) Extremely Aggressive

C. For the substructure, additional descriptive data supplements the environmental classification. After the classification, note in parentheses, the source and magnitude of the environmental classification parameters resulting in the classification.

Commentary: As an example, for a proposed bridge located in a freshwater swampy area where the substructure is determined to be in an Extremely Aggressive environment due to low soil pH of 4.5 and the superstructure to be in a Slightly Aggressive environment, the format on the bridge plans will be:

ENVIRONMENTAL CLASSIFICATION:
Substructure: Extremely Aggressive (Soil - pH = 4.5)
Superstructure: Slightly Aggressive

D. The substructure will not be classified less severely than the superstructure.

E. Bridge substructure and superstructure environments will be classified as Slightly Aggressive, Moderately Aggressive, or Extremely Aggressive environments according to the following criteria.

1.3.1 Substructure

For Conditions of soil and water:

A. Slightly Aggressive when all of the following conditions exist:
1.) pH greater than 6.6.
2.) Resistivity greater than 3,000 ohm-cm.
3.) Sulfates less than 150 ppm.
4.) Chlorides less than 500 ppm.

B. Moderately Aggressive: This classification must be used at all sites not meeting requirements for either Slightly Aggressive or Extremely Aggressive Environments.

C. Extremely Aggressive when any one of the following conditions exists:
1.) For concrete structures: pH less than 5.0.
2.) For steel structures: pH less than 6.0.
3.) Resistivity less than 500 ohm-cm.
4.) Sulfates greater than 1,500 ppm.
5.) Chlorides greater than 2,000 ppm.

1.3.2 Superstructure

A. Slightly Aggressive: Any superstructure situated in an environment that is not classified as either Moderately or Extremely Aggressive (see Figure 1-1).

B. Moderately Aggressive: Any superstructure located within 2,500 feet. of any coal burning industrial facility, pulpwood plant, fertilizer plant or any other similar industry where, in the opinion of the District Materials Engineer, a potential environmental corrosion condition exists, or any other specific conditions and/or locations described in Figure 1-1.

C. Extremely Aggressive: Any superstructure situated in an area such that a combination of environmental factors indicates that significant corrosion potential exists, or with specific conditions and/or locations described in Figure 1-1.

1.3.3 Chloride Content

A. The District Materials Engineer will determine the chloride content of the water and soil at the proposed bridge site.

B. The chloride content of major bodies of water within 2,500 feet of the proposed bridge site will, in most instances, be available in the Department's Bridge Corrosion Analysis database. If chloride values are unavailable, the major body of water must be tested unless it is known to be a freshwater body.

C. Generally, all superstructures that are within line-of-sight and within 2,500 feet of the Atlantic Ocean or the Gulf of Mexico are subject to increased chloride intrusion rates on the order of 0.0016 lbs/cy/year at a 2-inch concrete depth. The intrusion rate decreases rapidly with distance from open waters and/or when obstacles such as rising terrain, foliage or buildings alter wind patterns. In order to optimize the materials selection process, the Designer and/or

District Materials Engineer have the option of obtaining representative cores to determine chloride intrusion rates for any superstructure within 2,500 feet of any major body of water containing more than 12,000-ppm chlorides. The District Materials Engineer will take core samples from bridge superstructures in the immediate area of the proposed superstructure. The sampling plan with sufficient samples representing the various deck elevations will be coordinated with the State Corrosion Engineer. The Corrosion Laboratory of the State Materials Office will test core samples for chloride content and intrusion rates.

D. After representative samples are taken and tested, Table 1.1 will be used to correlate the core results (the chloride intrusion rate in lbs/cy/year at a depth of 2-inch) with the classification.

Table 1.1 Chloride Intrusion Rate/Environmental Classification

CHLORIDE INTRUSION RATE	CLASSIFICATION
> 0.0016 lbs/cy/year	Extremely Aggressive
< 0.0016 lbs/cy/year	Moderately Aggressive

Figure 1-1 Flow Diagram for determining Environmental Classification

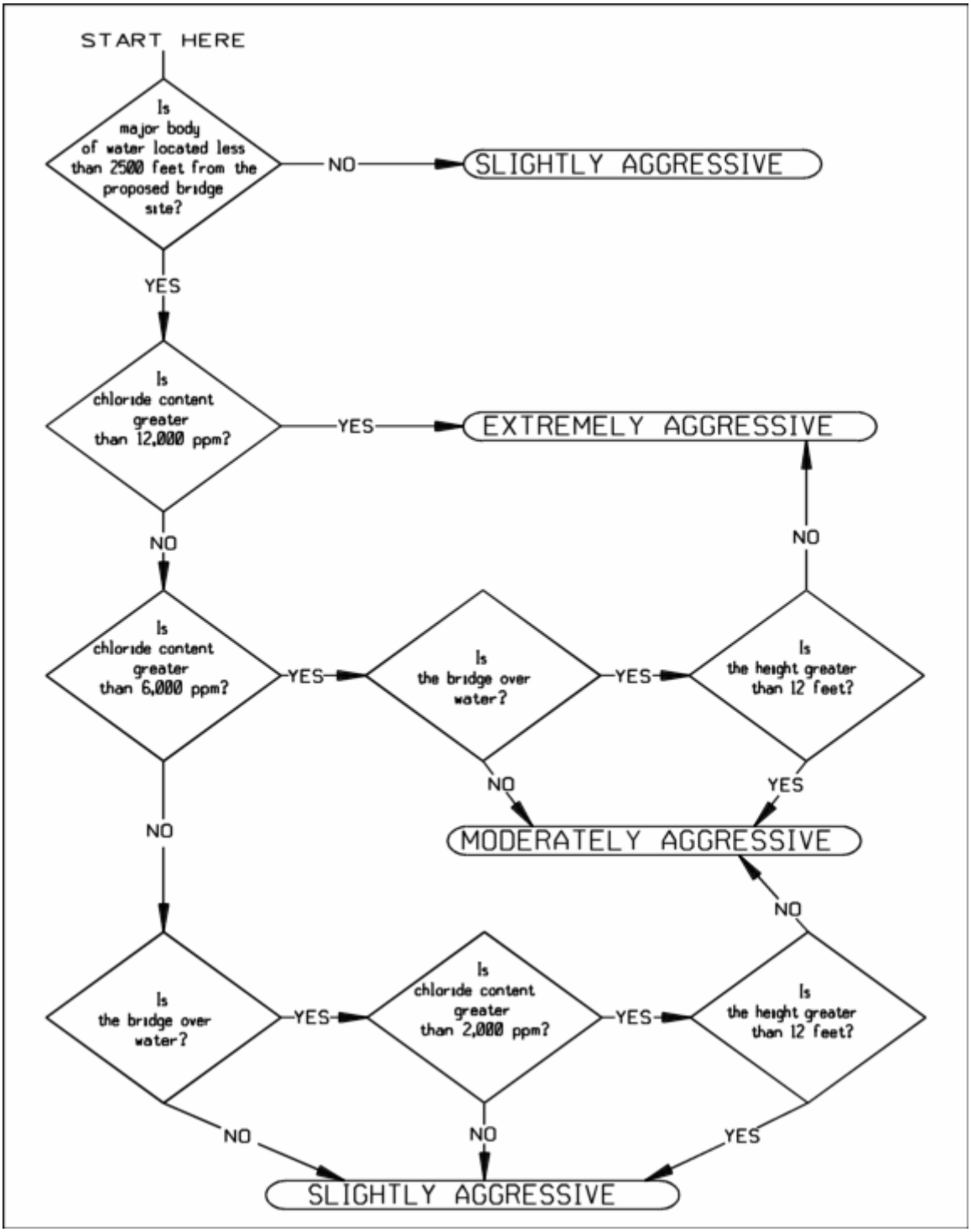

NOTES:
The height of 12 feet may be increased for extreme exposure conditions. Height refers to the distance between the lowest superstructure elevation and the water surface at mean High Water (MHW).

1.4 Concrete and Environment [5.12.1]

1.4.1 Cover

Delete AASHTO ***LRFD 5.12.3*** and substitute the following requirements:

A. The requirements for concrete cover over reinforcing steel are listed in Table 1.2. Examples of concrete cover are shown in Figures 1.2 through 1.5.

B. When deformed reinforcing bars are in contact with other embedded items such as post-tensioning ducts, the actual bar diameter, including deformations, must be taken into account in determining the design dimensions of concrete members and in applying the design covers of Table 1.2.

Table 1.2 Concrete Cover

	CONCRETE COVER (inches)	
	S or M*	E*
Superstructure (Precast)		
Internal and external surfaces (except riding surfaces) of segmental concrete boxes, and external surfaces of prestressed beams (except the top surface):	2	2
Top surface of girder top flange:	1	1
Top deck surfaces: Short Bridges***	2	2
Top deck surfaces: Long Bridges***:	2 1/2**	2 1/2**
All components and surfaces not included above (including barriers):	2	2
Superstructure (Cast-in-Place)		
All external and internal surfaces (ex. top surfaces):	2	2
Top deck surfaces; Short Bridges ***:	2	2
Top deck surfaces; Long Bridges ***:	2 1/2**	2 1/2**
Substructure (Cast-in-Place)		
External surfaces cast against earth and surfaces in contact with water:	4	4 1/2
Ext. formed surfaces, columns, and tops of footings not in contact w/ water:	3	4
Internal surfaces:	3	3
Top of Girder Pedestals:	2	2
Substructure (Precast):	3	4
Prestressed Piling (Including cylinder piling):	3	3
Drilled Shafts:	6	6
Retaining Walls (Cast-in-Place or Precast):	2	3
Culverts (Cast-in-Place or Precast):	2	3
Bulkheads:	4	4

*S = Slightly Aggressive; M = Moderately aggressive; E = Extremely Aggressive.
**Cover dimension includes a 0.5-inch allowance for milling.
***See Short & Long Bridge Definitions in Chapter 4.

1.4.2 Class and Admixtures

A. The “General Notes” for both bridge plans and wall plans require the clear identification of, and delineation of use for, concrete class and admixtures used for strength and durability considerations.

B. Concrete Class Requirements: When the environmental classifications for a proposed structure have been determined, those portions of the structure located in each classification will be built with the class of concrete described in Table 1-3 for the intended use and location unless otherwise directed or approved by the Department.

C. Unless otherwise specifically designated or required by the FDOT, the concrete strength utilized in the design must be consistent with the 28-day compressive strength given in the FDOT Standard Specification Section 346.

Commentary: Example:
Component - submerged piling
Environment - Extremely Aggressive over saltwater
Concrete Class - Table 1.2 Class V (Special)
Quality Control and Design Strength at 28 days - 6,000 psi

D. Admixtures for Corrosion Protection: Primary components of structures located in moderately or Extremely Aggressive environments utilize Class IV, V, V (Special), or VI Concrete. These concrete classes use fly ash, slag, silica fume, and/or cement type to reduce permeability.

E. Structures located in Extremely Aggressive marine environments may require additional measures as defined below. These additional measures and their locations must be clearly identified in the “General Notes”. Technical Special Provisions may be required for their implementation.

F. The use of concrete admixtures to enhance durability must be consistent with these guidelines. The Engineer of Record may request additional measures to be approved by the State Corrosion Engineer and the State Structures Design Engineer.

G. When the environmental classification is Extremely Aggressive due to the presence of chloride in the water:

1.) Specify calcium nitrite in all:
   a.) Superstructure components situated less than 12 feet above Mean High Water (MHW) .
   b.) Retaining walls, including MSE walls situated less than 12 feet above MHW and within 300 feet of the shoreline.
2.) Specify silica fume in all:
   a.) Piles of pile bents.
   b.) Columns or walls within the "splash zone."
   c.) Sections of post-tensioned cylinder piles within the "splash zone" plus one section above and below the "splash zone" limits.
3.) Do not specify silica fume for drilled shafts.
4.) The splash zone is the vertical distance from 4 feet below MLW to 12 feet above MHW.

Table 1.3 Structural Concrete Class Requirements				
CONCRETE LOCATION AND USAGE		**ENVIRONMENTAL CLASSIFICATION**		
		Slightly Aggressive	Moderately Aggressive	Extremely Aggressive
SUPERSTRUCTURE	Cast-in-Place (other than Bridge Decks)	Class II	Class IV	Class IV
	Cast-in-Place Bridge Deck (Including Diaphragms)	Class II (Bridge Deck)	Class IV	Class IV
	Approach Slabs	Class II (Bridge Deck)	Class II (Bridge Deck)	Class II (Bridge Deck)
	Precast or Prestressed	Class III, IV, V, or VI	Class IV, V, or VI	Class IV, V, or VI
SUBSTRUCTURE	Cast-in-Place (other than Bridge Seals)	Class II	Class IV	Class IV, or V
	Precast or Prestressed (other than piling)	Class III, IV, V, or VI	Class IV, V, or VI	Class IV, V, or VI
	Cast-in-Place Columns located directly in splash zone	Class II	Class IV	Class IV
	Piling	Class V (Spec.) or VI	Class V (Spec.) or VI	Class V (Spec) or VI
	Drilled Shafts	Class IV (Drilled Shafts)	Class IV (Drilled Shafts)	Class IV (Drilled Shafts)
	Retaining Walls	Class II or III	Class IV	Class IV

Corrosion Protection Measures: Calcium nitrite and/or silica fume admixtures may be required. Admixture use must conform to the requirements of “Concrete Class and Admixtures for Corrosion Protection.”

Figure 1-2 End Bent in Slightly or Moderately Aggressive Environment

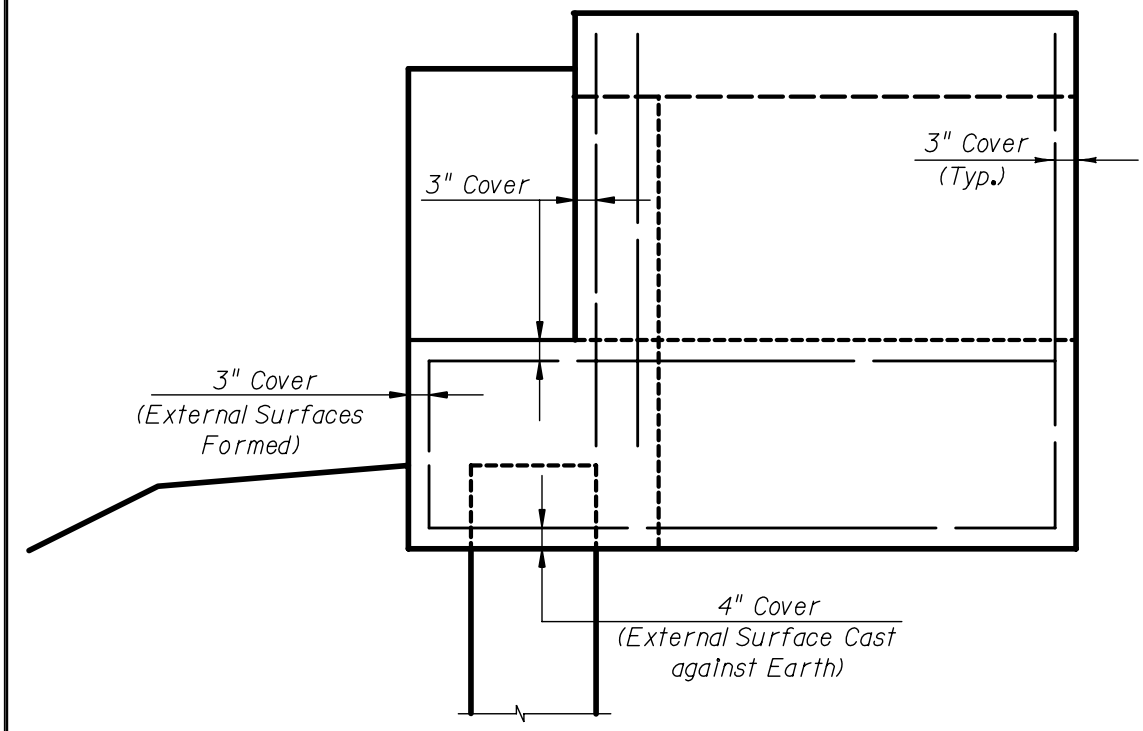

END BENT LOCATION IN SLIGHTLY OR
MODERATELY AGGRESSIVE ENVIRONMENT

Figure 1-3 Pier in Water (Extremely Aggressive Environment)

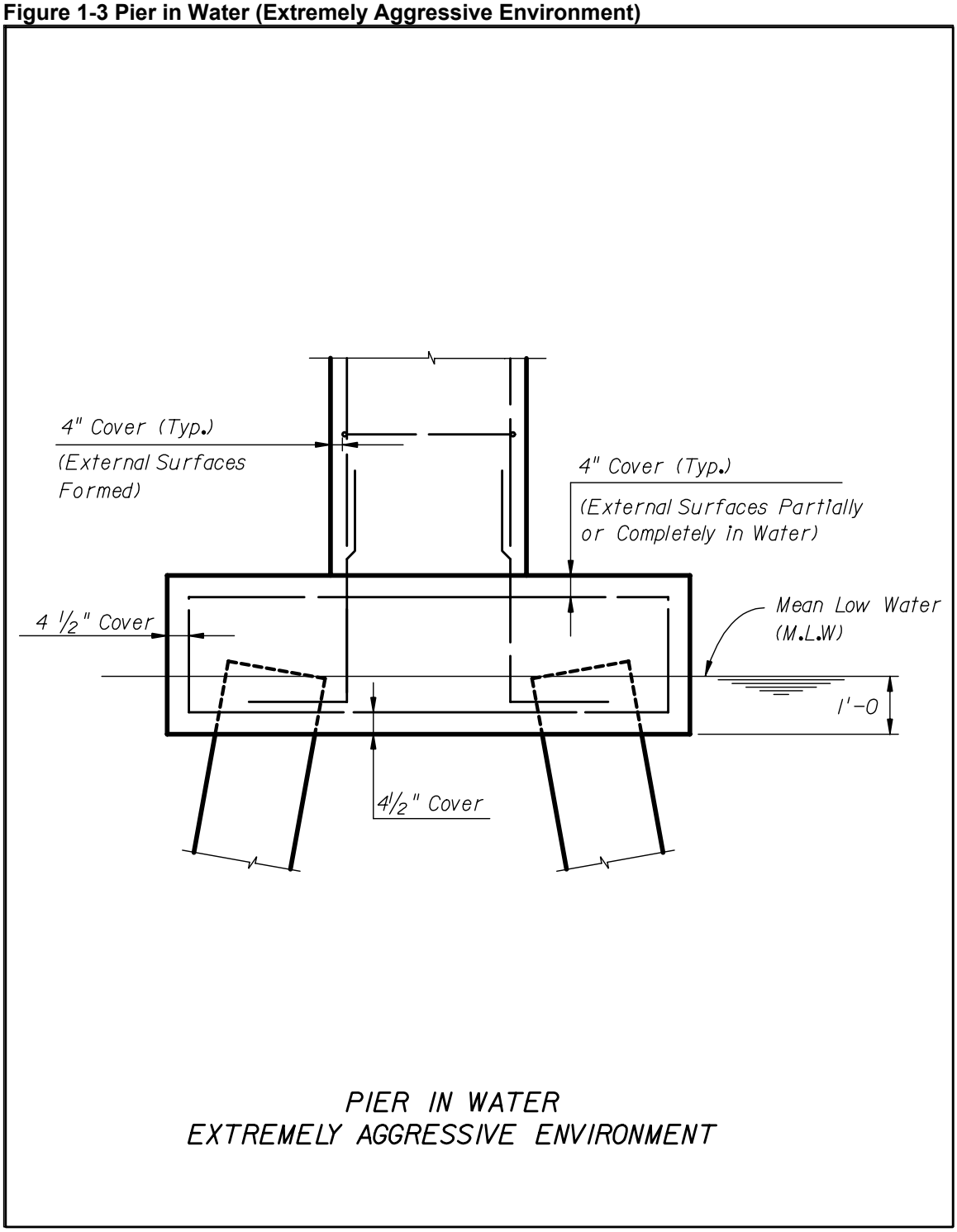

Figure 1-4 Intermediate Bent in water (Slightly or Moderately Aggressive Environment)

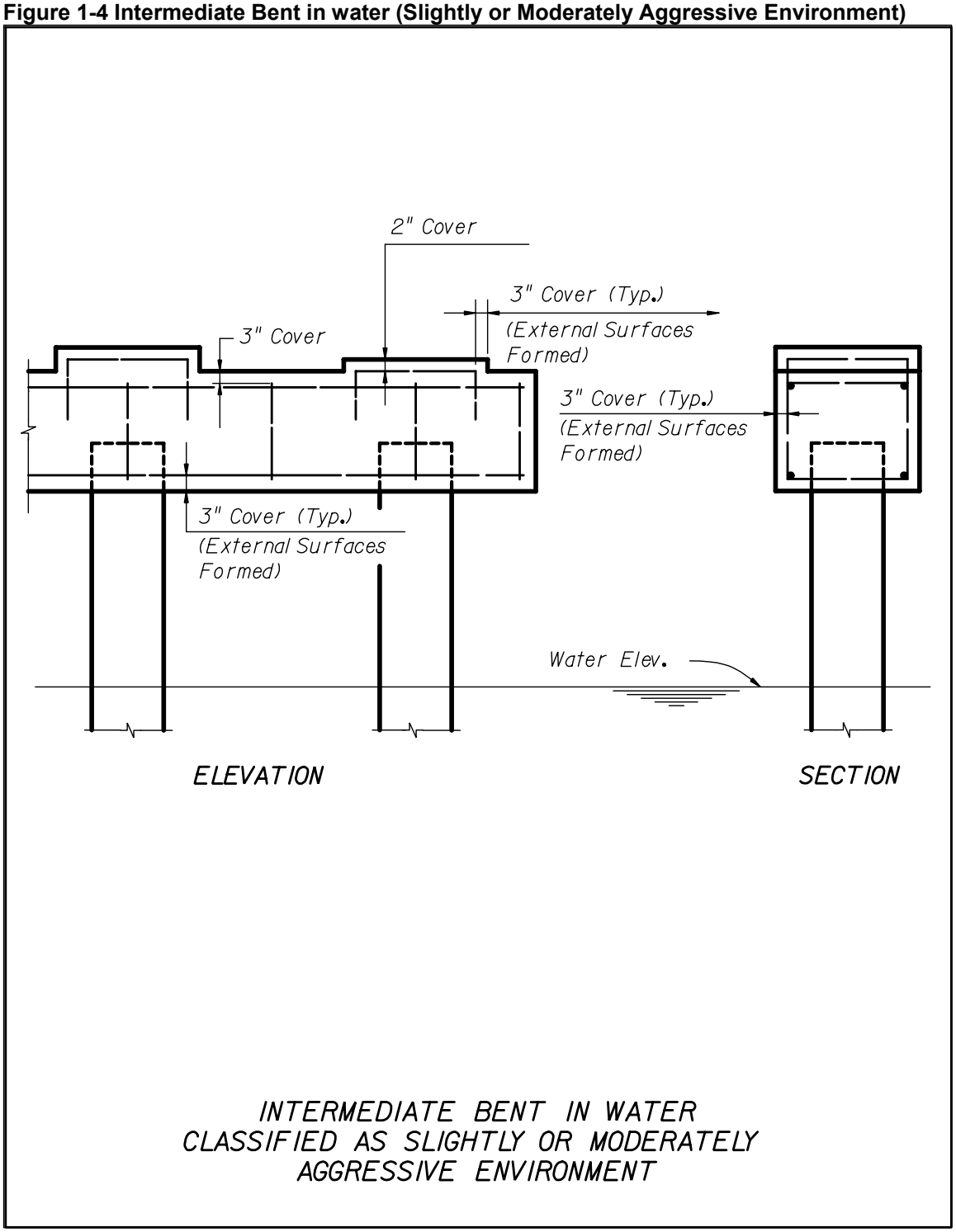

Figure 1-5 Cast-in-Place Slab with Beam Supported Superstructure (All Environments)

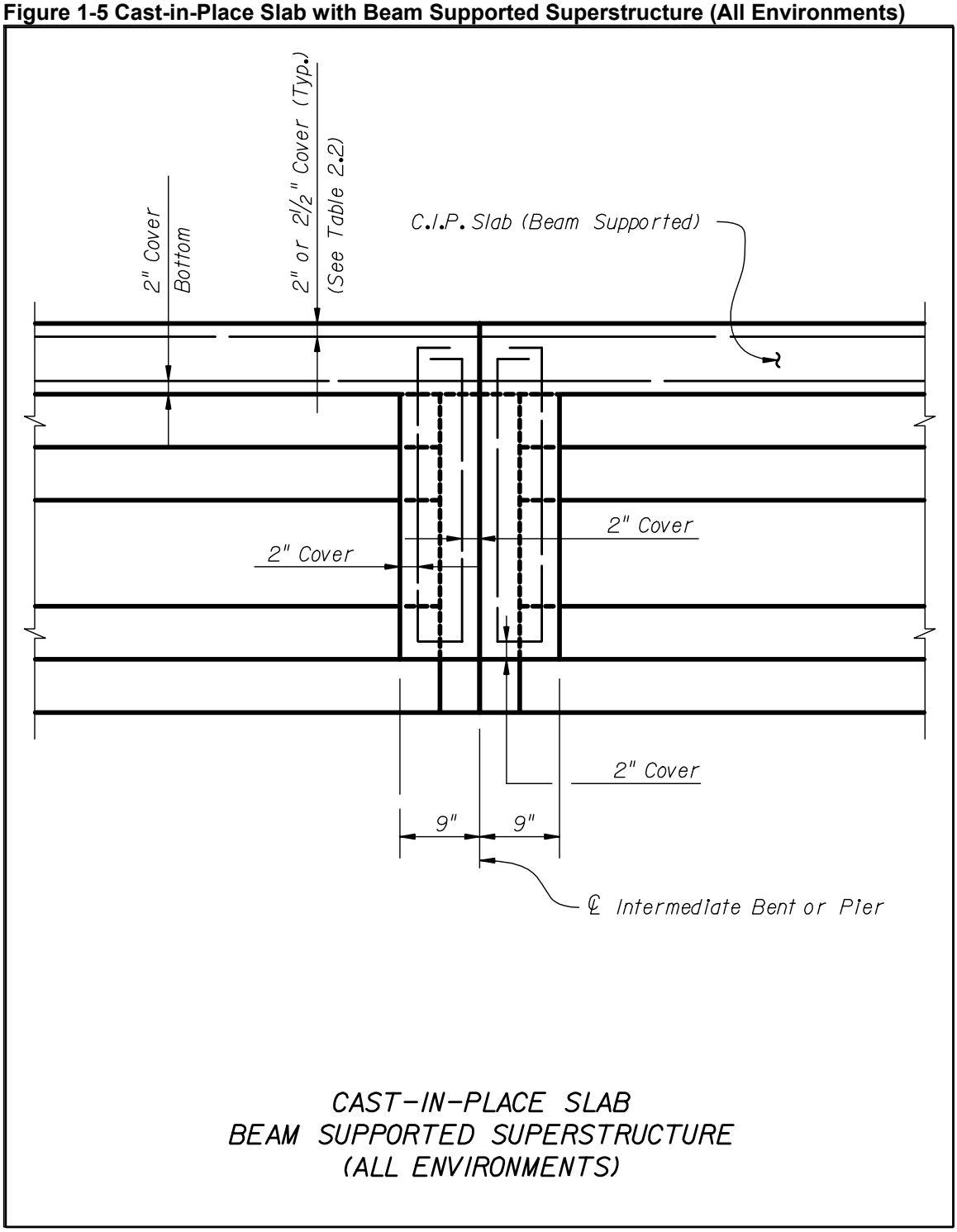

1.5 Existing Hazardous Material

A. Survey the project to determine if an existing structure contains hazardous materials such as lead-based paint, asbestos-graphite bearing pads, etc. Information will be provided by the Department or by site testing to make this determination.

B. When an existing structure has been identified as having hazardous material, no project will be developed without adequate provisions for worker safety, handling, storage, shipping, and disposal of the hazardous material. If proposed work will disturb identified hazardous materials, include in the project documents, protection, handling, and disposal requirements.

C. When a project involves hazardous materials, the FDOT design project manager will provide assistance in preparing the construction documents and will provide the technical special provisions for handling and disposing of hazardous materials.

D. Comply with the regulations of the Occupational Safety and Health Administration (OSHA) and the Environmental Protection Agency (EPA) for the handling and disposal of hazardous materials.

1.6 Adhesive Anchor Systems

1.6.1 General

A. Adhesive Anchor Systems (adhesive bonding material and steel bar anchors installed in clean, dry holes drilled in hardened concrete) are used to attach new construction to existing concrete structures. Anchors may be reinforcing bars or threaded rods depending upon the application.

B. For pre-approved Adhesive Anchor Systems, refer to the ***Departments Qualified Products List (QPL)***, Adhesive Bonding Material Systems for Structural Applications. Comply with Section 937 of the Specifications. Require that Adhesive Anchors be installed in accordance with manufacturer's recommendations for hole diameter and hole cleaning technique and meet the requirements of Section 416 of the Specifications.

Commentary: Installation of Adhesive Anchor Systems in saturated, surface-dry holes; i.e., holes with damp surfaces but with no standing water, is not pre-approved or recommended by the Department. However, in the event such a condition is encountered during construction, the Department may consider approving continued installation, but only on an adjusted, case-by-case basis. The damp hole strength of products on the QPL has been determined to be approximately 75% of the required dry hole strength.

C. Do not use Adhesive Anchor Systems to splice with existing reinforcing bars in either non-prestressed or prestressed concrete applications unless special testing is performed and special, proven construction techniques are utilized.

D. Unless special circumstances dictate otherwise, design Adhesive Anchor Systems for a ductile failure. A ductile failure requires embedment sufficient to ensure that failure will occur by yielding of the steel. In order to produce ductile failure, the following embedments may be assumed:

1.) For Anchors in Tension: The embedment length necessary to achieve 125% of the specified yield strength or 100% of the specified tensile strength, whichever is less.

2.) For Anchors in Shear: An embedment equal to 70% of the embedment length determined for anchors in tension.

E. In circumstances where ductile failure is not required, the design may be based upon the design strength of either the steel anchor or the adhesive bond, whichever is less.

F. Adhesive Anchor Systems meeting the specifications and design constraints of this article are permitted only for horizontal, vertical, or downwardly inclined installations. Overhead or upwardly inclined installations of Adhesive Anchors are prohibited. Use QPL listed adhesive bonding to splice prestressed piling.

1.6.2 Notation

The following notation is used in this Article:

A_e = effective tensile stress area of steel anchor (may be taken as 75% of the gross area for threaded anchors). [in^2]
A_{n0} = $(16d)^2$, effective area of a single Adhesive Anchor in tension; used in calculating Ψ_{gn} (See Figure 1-6). [in^2]
A_n = effective area of a group of Adhesive Anchors in tension; used in calculating Ψ_{gn}, defined as the rectangular area bounded by a perimeter spaced 8d from the center of the anchors and limited by free edges of concrete (See Figure 1-6). [in^2]
A_{v0} = $4.5(c^2)$, effective breakout area of a single Adhesive Anchor in shear; used in calculating Ψ_{gv} (See Figure 1-7). [in^2]
A_v = effective area of a group of Adhesive Anchors in shear and/or loaded in shear where the member thickness, h, is less than 1.5c and/or anchor spacing, s, is less than 3c; used in calculating Ψ_{gv}, (See Figure 1-7). [in^2]
c = anchor edge distance from free edge to centerline of the anchor [in]. (must also meet Table 1.2 Cover Requirements.)
d = nominal diameter of Adhesive Anchor. [in]
f'c = minimum specified concrete strength. [ksi]
f_y = minimum specified yield strength of Adhesive Anchor steel. [ksi]
f_u = minimum specified ultimate strength of Adhesive Anchor steel. [ksi]
h = concrete member thickness. [in]
h_e = embedment depth of anchor. [in]
N_c = tensile design strength as controlled by bond for Adhesive Anchors. [kips]
N_n = nominal tensile strength of Adhesive Anchor. [kips]
N_o = nominal tensile strength as controlled by concrete embedment for a single Adhesive Anchor. [kips]
N_s = design strength as controlled by Adhesive Anchor steel. [kips]
N_u = factored tension load. [kips]
s = Adhesive Anchor spacing (measured from centerlines of anchors). [in] When using Type HSHV adhesives, the minimum anchor spacing is 12d, unless approved by the State Structures Engineer.

V_c = shear design strength as controlled by the concrete embedment for Adhesive Anchors. [kips]
V_s = design shear strength as controlled by Adhesive Anchor steel. [kips]
V_u = factored shear load. [kips]
T' = 1.08 ksi nominal bond strength for general use products on the QPL (Type V and Type HV). 1.83 ksi nominal bond strength for Type HSHV adhesive products on the QPL for traffic railing barrier retrofits only.

$Ø_c$ = 0.85, capacity reduction factor for adhesive anchor controlled by the concrete embedment, ($Ø_c$ =1.00 for extreme event load case).

$Ø_s$ = 0.90, capacity reduction factor for adhesive anchor controlled by anchor steel.
Ψ_e = modification factor, for strength in tension, to account for anchor edge distance less than 8d (1.0 when c ≥ 8d.)
Ψ_{gn} = strength reduction factor for Adhesive Anchor groups in tension (1.0 when s ≥ 16d).
Ψ_{gv} = strength reduction factor for Adhesive Anchor groups in shear and single Adhesive Anchors in shear influenced by member thickness (1.0 when **s** ≥ 3.0c and **h** ≥ 1.5c).

1.6.3 Design Requirements for Tensile Loading

Use Equation 1-2 to determine the design tensile strength for Adhesive Anchor steel:

$$ØN_s = Ø_s A_e f_y \quad \text{[Eq. 1-2]}$$

Use Equation 1-3 to determine the design tensile strength for Adhesive Anchor bond:

$$ØN_c = Ø_c \Psi_e \Psi_{gn} N_o \quad \text{[Eq. 1-3]}$$

where:

$$N_o = T'\pi d\, h_e \quad \text{[Eq. 1-4]}$$

For anchors with a distance to a free edge of concrete less than 8d, but greater than or equal to 3d, a reduction factor, Ψ_e, as given by Equation 1-5 must be used. For anchors located less than 3d from a free edge of concrete, an appropriate strength reduction factor must be determined by special testing. For anchors with an edge distance greater than 8d, Ψ_e may be taken as 1.0. Edge distance for all anchors must also meet Table 1.2 Cover Requirements.

$$\Psi_e = 0.70 + 0.30\,(c / 8d) \quad \text{[Eq. 1-5]}$$

For anchors loaded in tension and spaced closer than 16d, a reduction factor, Ψ_{gn}, given by Equation 1-6 must be used. For anchor spacing greater than 16d, Ψ_{gn} must be taken as 1.0.

$$\Psi_{gn} = (A_n / A_{no}) \quad \text{[Eq. 1-6]}$$

1.6.4 Design Requirements for Shear Loading

A. Adhesive Anchors loaded in shear must be embedded not less than 6d with an edge distance not less than the greater of 3d or that distance required to meet the concrete cover requirements of Table 1.2.

B. For Adhesive Anchors loaded in shear, the design shear strength controlled by anchor steel is determined by Equation 1-7:

$$ØV_s = Ø_s\, 0.7\, A_e f_y \quad \text{[Eq. 1-7]}$$

C. For Adhesive Anchors loaded in shear, the design shear strength controlled by concrete breakout for shear directed toward a free edge of concrete is determined by Equation 1-8:

$$ØV_c = Ø_c \Psi_{gv}\, 0.4534\, c^{1.5}\sqrt{f'_c} \quad \text{[Eq. 1-8]}$$

D. For anchors spaced closer than 3.0c and/or member thickness less than 1.5c, a reduction factor, Ψ_{gv}, given by Equation 1-9 must be used. For anchor spacing greater than 3.0c with member thickness greater than 1.5c, Ψ_{gv} must be taken as 1.0.

$$\Psi_{gv} = A_v / A_{v0} \quad \text{[Eq. 1-9]}$$

1.6.5 Interaction of Tensile and Shear Loadings

A. The following linear interaction between tension and shear loadings given by Equation 1-10 must be used unless special testing is performed:

$$(N_u / ØN_n) + (V_u / ØV_n) \leq 1.0 \quad \text{[Eq. 1-10]}$$

B. In Equation 1-10, $ØN_n$ is the smaller of the design tensile strength controlled by the Adhesive Anchor steel (Equation 1-2) or the design tensile strength as controlled by Adhesive Anchor bond (Equation 1-3). $ØV_n$ is the smaller of the design shear strength controlled by the

Adhesive Anchor steel (Equation 1-7) or the design shear strength as controlled by concrete breakout (Equation 1-8).

Commentary:
If Adhesive Anchor Systems are required to act as dowels from existing concrete components such that the existing reinforcing steel remains fully effective over its length, then the Adhesive Anchor System must be installed to a depth equal to the development length of the existing reinforcing steel. In this case, the required reinforcing steel spacing, covers, etc. apply to both the existing reinforcing steel and the Adhesive Anchor System. There is, however, no additional benefit to the Adhesive Anchor System to install anchors to a greater depth than required by this Article.

1.6.6 Example 1 – Single Anchor Away from Edges and Other Anchors

Design an adhesive anchor using threaded rod (ASTM A193, Grade B7) for a factored tension load of 18 kips. The anchor is located more than 8 anchor diameters from edges and is isolated from other anchors. The anchor embedment length is to be sufficient to ensure steel failure.

Given:

N_u = 18.0 kips
f_y = 100.0 ksi
f_u = 125.0 ksi
T' = 1.08 ksi

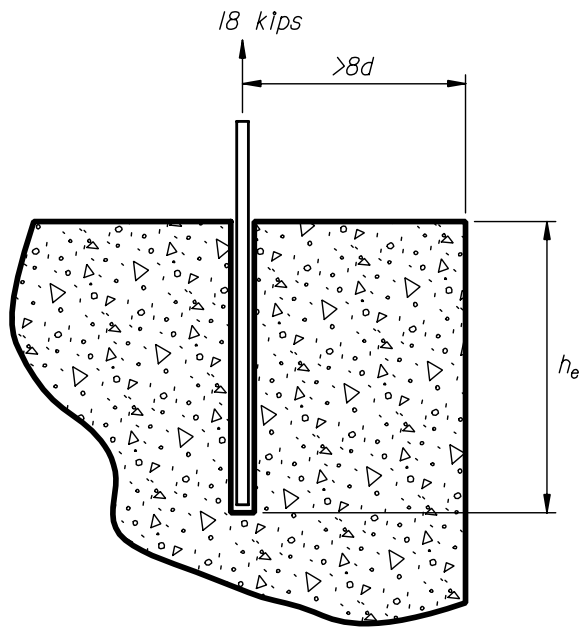

Section View

Design Procedure Example 1	Calculation
Step 1 - Determine required rod diameter	
Determine the required diameter of the threaded rod by setting the factored tension load equal to the design steel strength.	$\mathbf{N_u = N_s}$
The effective area for the threaded rod may be taken as 75% of the gross area. As with reinforcing bars, the minimum specified yield strength of the rod is used to determine the required diameter.	$\mathbf{Ns = Ø_s\ A_e\ f_y}$ where: $\mathbf{Ø_s}$ = 0.9, $\mathbf{A_e}$ = 0.75 ($\pi d^2/4$), $\mathbf{f_y}$ = 100 ksi
Substituting and solving for **d**:	18 = (0.9)[0.75 ($\pi d^2/4$)](100) ***d*** *= 0.583 in.* therefore, use 5/8" threaded rod
Step 2 - Determine required embedment length to ensure steel failure	
Basic equation for embedment length calculation. Since there are no edge or spacing concerns, Ψ_e and Ψ_{gn} may be taken as unity.	$\mathbf{N_c = Ø_c\ \Psi_e\ \Psi_{gn}\ N_o}$ (for embedment) *where:* $\mathbf{Ø_c}$ = 0.85 $\mathbf{\Psi_e, \Psi_{gn}}$ = 1.0 (no edge/spacing concern) $\mathbf{N_o}$ = T´ πd $\mathbf{h_e}$
For ductile behavior it is necessary to embed the anchor sufficiently to develop 125% of the yield strength or 100% of the ultimate strength, whichever is less.	$\mathbf{N_c}$ (reqd) = 1.25 $\mathbf{A_e\ f_y \le A_e\ f_u}$
Determine the effective area for a 5/8" threaded rod:	$\mathbf{A_e}$ = 0.75 ($\pi 0.625^2/4$) $\mathbf{A_e}$ = 0.23 in^2
Determine the required tension force, $\mathbf{N_c}$(reqd), to ensure ductile behavior.	$\mathbf{N_c}$(reqd) = 1.25 $\mathbf{A_e\ f_y \le A_e\ f_u}$ $\mathbf{N_c}$(reqd) = 1.25 (.23)(100) ≤ (.23)(125) $\mathbf{N_c}$(reqd) = 28.75 kips = 28.75 kips therefore, use $\mathbf{N_c}$(reqd) = 28.75 kips
Substituting and solving for $\mathbf{h_e}$:	28.75 = 0.85 (1.0) (1.0) (1.08) π (.625) $\mathbf{h_e}$ $\mathbf{h_e}$ = 16 in

1.6.7 Example 2 – Single Anchor Away from Other Anchors but Near Edge

Design an adhesive anchor using threaded rod (ASTM A193, Grade B7) for a factored tension load of 18 kips. The anchor is located 4 inches from an edge but is isolated from other anchors. The anchor embedment length is to be sufficient to ensure steel failure.

Given:

N_u = 18.0 kips
f_y = 100.0 ksi
f_u = 125.0 ksi
T' = 1.08 ksi
c = 4 inches

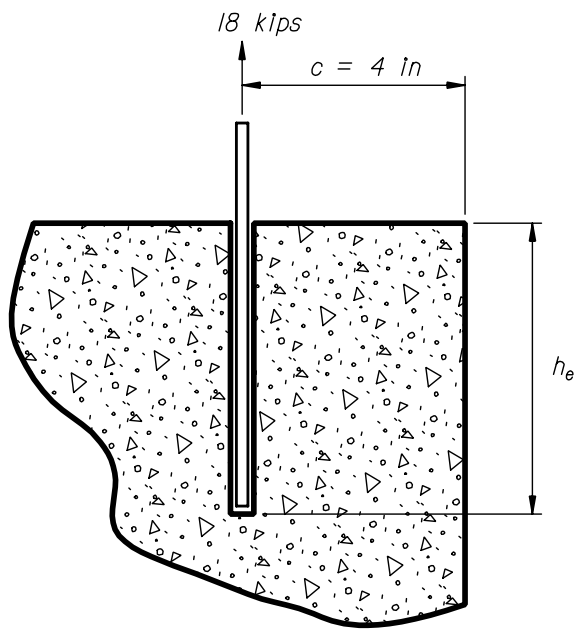

Section View

Design Procedure-Example 2	Calculation
Step 1 - Determine required rod diameter	
Determine the required diameter of the threaded rod by setting the factored tension load equal to the design steel strength.	$\mathbf{N_u = N_s}$
The effective area for the threaded rod may be taken as 75% of the gross area. As with reinforcing bars, the minimum specified yield strength of the rod is used to determine the required diameter.	$\mathbf{N_s = Ø_s\ A_e\ f_y}$ where: $\mathbf{Ø_s}$= 0.9 $\mathbf{A_e}$= 0.75 ($\pi d^2/4$) $\mathbf{f_y}$= 100 ksi
Substituting and solving for d:	18 = (0.9)[0.75 ($\pi d^2/4$)](100) **d** = 0.583 in therefore, use a 5/8" threaded rod
Step 2 - Determine required embedment length to ensure steel failure	
Basic equation for embedment length calculation. Since there are no spacing concerns, $\mathbf{\Psi_{gn}}$ may be taken as unity, and, since the edge distance (4 in) is less than 8d (5 in), the edge effect, $\mathbf{\Psi_e}$, will need to be evaluated.	$\mathbf{N_c = Ø_c\ \Psi_e\ \Psi_{gn}\ N_o}$ (for embedment) where: $\mathbf{Ø_c}$ = 0.85 $\mathbf{\Psi_{gn}}$ = 1.0 (no spacing problem) $\mathbf{N_0}$ = T' π d $\mathbf{h_e}$
For ductile behavior it is necessary to embed the anchor sufficiently to develop 125% of the yield strength or 100% of the ultimate strength, whichever is less.	$\mathbf{N_c}$(reqd) = 1.25 $\mathbf{A_e\ f_y \leq A_e\ f_u}$
Determine the effective area for a 5/8" threaded rod:	$\mathbf{A_e}$ = 0.75 (π $0.625^2/4$) $\mathbf{A_e}$ = 0.23 in^2
Determine the required tension force, $\boldsymbol{N_c}$(reqd), to ensure ductile behavior.	$\mathbf{N_c}$(reqd) = 1.25 $\mathbf{A_e\ f_y \leq A_e\ f_u}$ $\mathbf{N_c}$(reqd) = 1.25 (.23)(100)≤ (.23)(125) $\mathbf{N_c}$(reqd) = 28.75 kips = 28.75 kips Therefore, use $\mathbf{N_c}$(reqd) = 28.75 kips
Determine edge effect factor, $\mathbf{\Psi_e}$. Note: $\mathbf{c_{cr}}$ = 8d	$\mathbf{\Psi_e}$ = 0.70 + 0.30 (c /8d) $\mathbf{\Psi_e}$ = 0.70 + 0.30 [4/(8)(.625)] $\mathbf{\Psi_e}$ = 0.94
Substituting and solving for $\mathbf{h_e}$:	28.75 = 0.85 (1.0)(0.94)(1.08) π (.625) $\mathbf{h_e}$ $\mathbf{h_e}$ = 16.98 inches

1.6.8 Example 3 – Two Anchors Spaced at 8 Inches, 4 Inches from Edge

Design a group of two adhesive anchors using threaded rod (ASTM A193, Grade B7) for a factored tension load of 18 kips. The anchors are located 4 inches from an edge and are spaced 8 inches apart. Steel failure is not required.

Given:

N_u = 18.0 kips
f_y = 100.0 ksi
f_u = 125.0 ksi
T' = 1.08 ksi
c = 4 inches
s = 8 inches

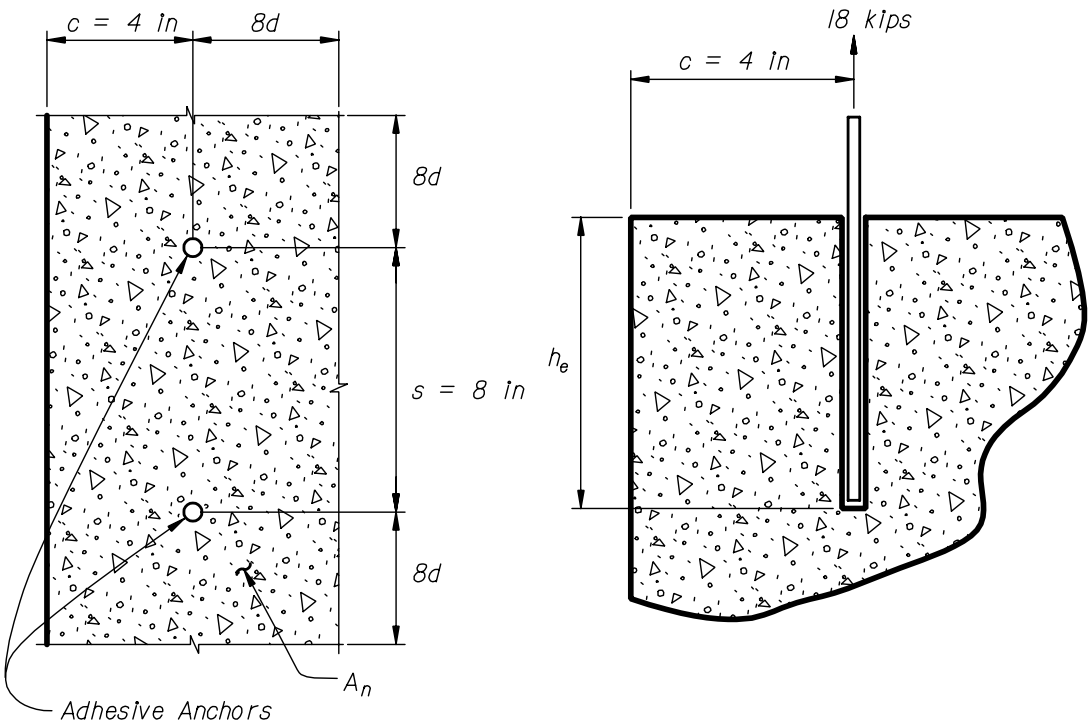

Design Procedure-Example 3	Calculation
Step 1 - Determine required rod diameter	
Determine the required diameter of the threaded rod by setting the factored tension load equal to the design steel strength.	$\mathbf{N_u = N_s}$
The effective area for the threaded rod may be taken as 75% of the gross area. As with reinforcing bars, the minimum specified yield strength of the rod is used to determine the required diameter.	$\mathbf{N_s = Ø_s\ A_e\ f_y}$ Where: $\mathbf{Ø_s}$ = 0.9 $\mathbf{A_e}$ = (2) 0.75 ($\pi d^2/4$) $\mathbf{f_y}$ = 100 ksi
Substituting and solving for **d**:	18 = (0.9)(2)[0.75 ($\pi d^2/4$)](100) **d** = 0.412 in Although a ½" threaded rod is OK, use a 5/8" threaded rod to minimize embedment length
Design steel strength	$\mathbf{N_s}$ = 0.9(2)(0.75)($\pi 0.625^2/4$)(100) $\mathbf{N_s}$= 41.4 kips > 18 kips therefore; OK
Step 2 - Determine required embedment length	
Basic equation for embedment length calculation. Since there are edge or spacing concerns, $\mathbf{\Psi_e}$ and $\mathbf{\Psi_{gn}}$ will need to be determined.	$\mathbf{N_c = Ø_c\ \Psi_e\ \Psi_{gn}\ N_0}$ (for embedment) where: $\mathbf{Ø_c}$ = 0.85 $\mathbf{\Psi_e}$ and $\mathbf{\Psi_{gn}}$ are calculated below $\mathbf{N_0}$ = T´πd $\mathbf{h_e}$
Determine edge effect factor, $\mathbf{\Psi_e}$.	$\mathbf{\Psi_e}$ = 0.70 + 0.30 (c/8d) $\mathbf{\Psi_e}$ = 0.70 + 0.30 [4 / (8)(.625)] $\mathbf{\Psi_e}$ = 0.94
Determine group effect factor, $\mathbf{\Psi_{gn}}$.	$\mathbf{\Psi_{gn}}$ = A_n / A_{no} $\mathbf{\Psi_{gn}}$ = (4 + 8d)[8 + 2(8d)]/$(16d)^2$] $\mathbf{\Psi_{gn}}$ = (4 + (8)(0.625)[8 + 2(8)(0.625)/$[16(0.625)]^2$ $\mathbf{\Psi_{gn}}$ = 1.62
Substituting and solving for $\mathbf{h_e}$	18 = (0.85)(1.62)(0.94)(1.08) π(.625)$\mathbf{h_e}$ $\mathbf{h_e}$ = 6.55" (say 7") therefore OK
Design adhesive bond strength.	$\mathbf{N_c}$ = (0.85)(1.62)(0.94)(1.08)π (.625)(7) $\mathbf{N_c}$ = 19.21 > 18. Therefore OK
Step 3 - Final Design Strength	
Strength as controlled by steel.	$\mathbf{N_s}$ = 41.4 kips > 18 kips. Therefore OK
Strength as controlled by adhesive bond.	$\mathbf{N_c}$ = 19.21 kips > 18 kips. Therefore OK
Final Design.	Two 5/8" anchors embedded 7 in.

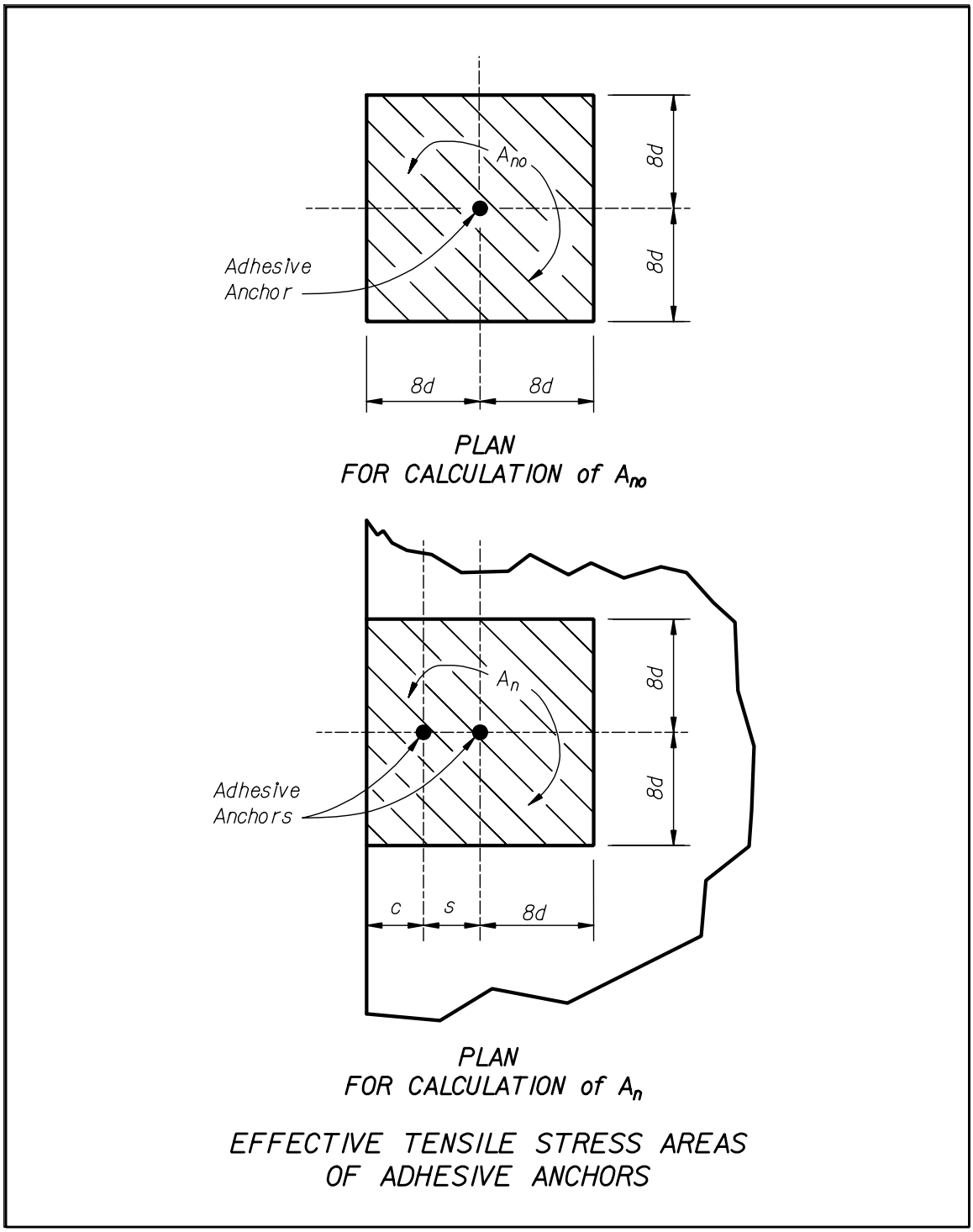

Figure 1-6 Effective Tensile Stress Areas of Adhesive Anchors

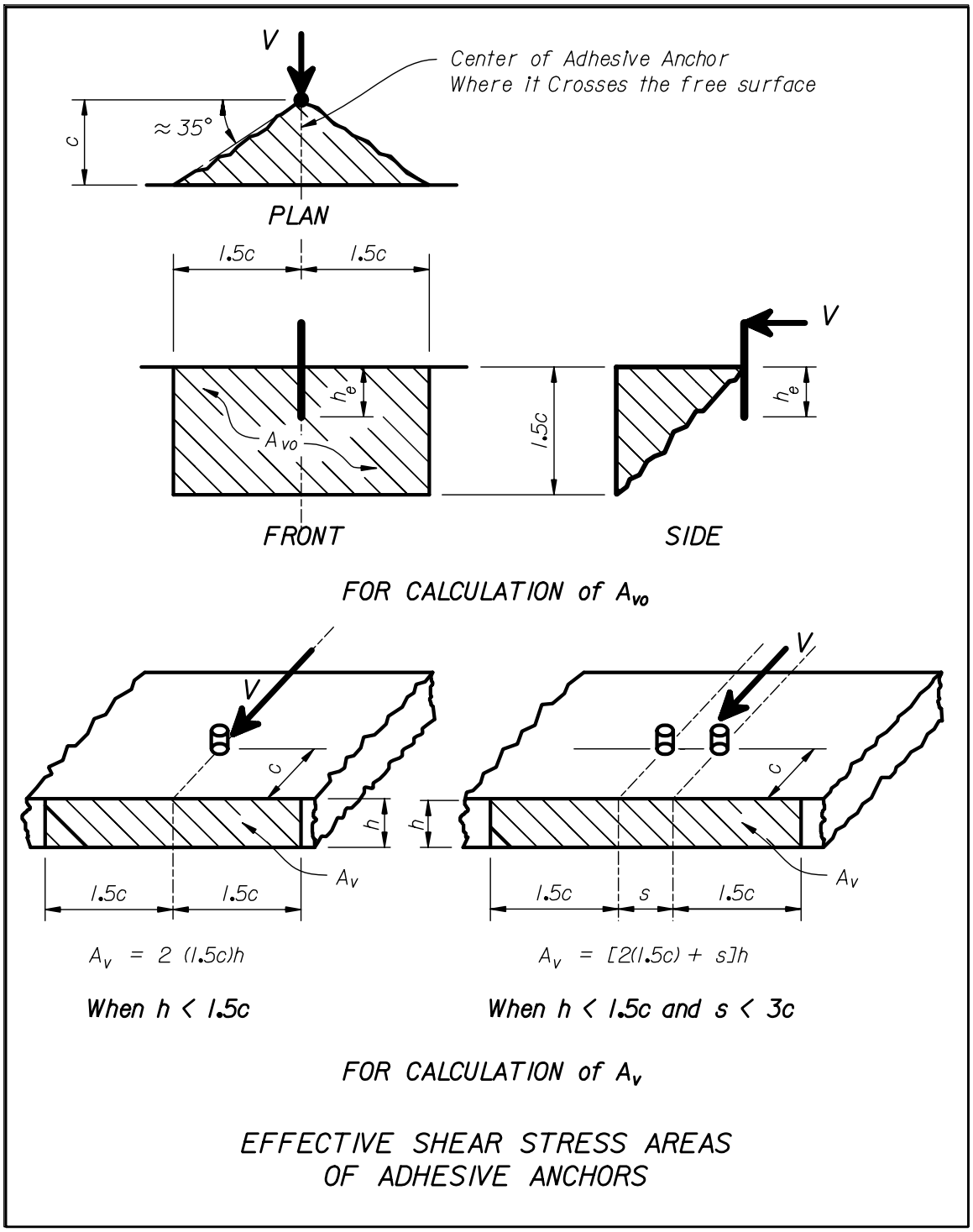

Figure 1-7 Effective Shear Stress Areas of Adhesive Anchors

Chapter 2 Loads and Load Factors

2.1 General

This Chapter contains information related to loads, loadings, load factors, and load combinations. It also contains deviations from ***LRFD*** regarding Loads and Load Factors as well as characteristics of a structure that affect each.

2.1.1 Load Factors and Load Combinations [3.4.1]

LRFD Table 3.4.1-1 does not show values for the load factors $\mathbf{Y_{TG}}$, $\mathbf{Y_{EQ}}$, and $\mathbf{Y_{SE}}$.
The following sub-articles specify the values that will be used for these load factors.

1.) Load Factor for Temperature Gradient: $\mathbf{Y_{TG}}$
   $\mathbf{Y_{TG}}$ = 0.0 for all strength limit states.
   $\mathbf{Y_{TG}}$ = 0.5 for service limit states of continuous concrete superstructures.

2.) Load Factor for Extreme Event-I Load Combination: $\mathbf{Y_{EQ}} = 0.0$.

3.) Load Factor for Foundation Settlement: $\mathbf{Y_{SE}} = 1.0$.

2.2 Dead loads

A. Future Wearing Surface: See Table 2.1 regarding the allowance for a Future Wearing Surface.

B. Sacrificial Concrete: Bridge decks subject to the profilograph requirements of Chapter 4 require an added thickness of sacrificial concrete, which must be accounted for as added Dead Load but cannot be utilized for bridge deck section properties.

2.3 Seismic Provisions [3.10.9][3.10.9.2][4.7.4]

2.3.1 General

A. The majority of Florida bridges will be exempted from seismic or restrainer design requirements. For exempted bridges, only the minimum bearing support dimensions need to be satisfied as required by ***LRFD*** [4.7.4.4]. Exempted bridges include those with superstructures comprising simple-span or continuous flat slabs, simple-span prestressed slabs or double-tees, simple-span AASHTO or Florida Bulb-Tee girders, and simple-span steel girders.

B. Seismic design is required for:
   1.) Unusual designs.
   2.) Continuous steel or concrete girders.
   3.) Steel or concrete box girders.
   4.) Concrete segmental bridges.
   5.) Curved bridges with a radius less than 1,000 feet.
   6.) Bridges that rely on a system of fixed or sliding bearings for transmitting elongation changes.
   7.) Spans in excess of 165 feet.
   8.) Cable supported bridges.
   9.) Bridges that do not use conventional elastomeric bearing pads.

C. Use the “Uniform Load Method” specified in ***LRFD*** [4.7.4.3.1] and [4.7.4.3.2], or any higher-level analysis, for calculating the seismic forces to be resisted by the bearings or other anchorage devices. Only the connections between the superstructure and substructure need to be designed for the seismic forces.

Commentary: Neoprene bearing pads, as used in the majority of Florida bridges, have sufficient shearing strength and slip resistance to transfer the calculated seismic forces to the substructure. For most Florida bridges, seismic forces will not govern over other load combinations; however, for some designs, even where the acceleration coefficient is as low as 1%, seismic loads can

govern. For example, a long continuous superstructure, supported on a system of sliding bearings at all piers except one short, stiff pier where fixed bearings are used. The fixed bearings, in such cases, must be designed to transmit the calculated seismic forces. These seismic forces will likely govern over other load cases.

2.3.2 Seismic Design for New Construction

A. When seismic design is required, use the single mode spectral method to determine the seismic design forces to be used for the restraint design between the superstructure and substructure only.

B. Compare these forces to the values obtained using the simplified seismic Zone 1 method (***LRFD*** 3.10.9.2). Use the lesser of the force values to design the seismic restraints.

C. The acceleration coefficient in Florida varies from 1% to 3.75%, and must be determined from the Map of Horizontal Acceleration contained in the latest edition of ***LRFD***.

2.3.3 Seismic Design for Widenings

A. When seismic design is required for a major widening (see definitions in SDG Chapter 7), all bridge elements must comply with the seismic provisions for new construction.

B. FDOT will consider seismic provisions for minor widenings on an individual basis.

2.3.4 Lateral Restraint

When lateral restraint of the superstructure is required due to seismic loading, comply with the provisions and requirements of Chapter 6, "Lateral Restraint."

2.4 Wind Loads

2.4.1 Wind Loads on Bridges [3.8.1]

Increase the wind pressures of ***LRFD*** by 20% for bridges located in Palm Beach, Broward, Dade, and Monroe counties. Submit wind pressures for bridges over 75 feet high or with unusual structural features, to FDOT for approval.

2.4.2 Wind Loads on Other Structures

Wind speeds for miscellaneous highway related structures are specified in Chapter 29 of the ***Plans Preparation Manual***, ***Volume 1.***

2.4.3 Wind Loads During Construction

A. During design, analyze the stability and lateral buckling of beams and girders for wind loading and handling/erection during construction and prior to casting the concrete deck slab. Design temporary bracing, shoring, tie-downs, strong backs, etc. to insure stability and resistance to lateral buckling.

B. When analyzing the stability of beams and girders, the Factor of Safety against overturning taken about the extreme lateral point of contact bearing, must not be less than 1.5, and the wind pressure during construction will be one-half the calculated horizontal wind pressure used for final design.

2.5 Miscellaneous Loads [3.5.1]

Use the loadings in Table 2.1 unless a more refined analysis is performed.

Table 2.1 Miscellaneous Loads

ITEM	UNIT	LOAD
Traffic Railing Barrier (32“ F-Shape)	Lb/ft	421
Traffic Railing Median Barrier, (32” F-Shape)	Lb/ft	486
Traffic Railing Barrier (42“ Vertical Shape)	Lb/ft	587
Traffic Railing Barrier (32“ Vertical Shape)	Lb/ft	385
Traffic Railing Barrier (42“ F-Shape)	Lb/ft	624
Traffic Railing Barrier / Sound Barrier (Bridge)	Lb/ft	1008
Pedestrian /Bicycle Railing (27" Concrete Parapet)	Lb/ft	225
Aluminum Pedestrian/Bicycle Bullet Railing (1, 2or 3 rails)	Lb/ft	10
Concrete, Counterweight (Plain)	Lb/cf	146
Concrete, Structural	Lb/cf	150
Future Wearing Surface	Lb/sf	15*
Soil; Compacted	Lb/cf	115
Stay-in-Place Metal Forms	Lb/sf	20**

* The Future Wearing Surface allowance applies only to minor widenings (see ***SDG***_7.2_Widening_Classifications_and_Definitions) or short bridges (see SDG 4.2. Bridge Length Definitions)

** Unit load of metal forms and concrete required to fill the form flutes to be applied over the projected plan area of the metal forms.

2.6 Vehicular Collision Force [3.6.5]

Design structures according to ***LRFD*** and [3.6.5.2] with the following modifications:

Regardless of the type pier column protection used, design all bridge pier columns for the equivalent static LRFD force. Utilize the shear reinforcement required at the column base to a distance of eight feet above ground surface.

Limit inelastic behavior to the impacted member. Do not use pile bents within the clear zone.

2.7 Uniform Temperature [3.12.2]

2.7.1 Segmental Box Girders

Delete ***LRFD*** [3.12.2] and substitute SDG Chapter 4.

2.7.2 Joints and Bearings

Delete ***LRFD*** [3.12.2] and substitute ***SDG*** Chapter 6.

2.7.3 All Other Bridge Components

For the design of all other bridge components, use the temperature ranges shown in ***SDG*** Table 6.2.

2.7.4 Temperature Gradient [3.12.3]

Delete the second paragraph of ***LRFD*** [3.12.3] and substitute the following:
“Include the effects of Temperature Gradient in the design of continuous concrete superstructures only. The vertical Temperature Gradient may be taken as shown in ***LRFD*** Figure 3.12.3-2.”

2.8 Barrier/Railing Distribution for Beam-Slab Bridges [4.6.2.2]

In lieu of the requirements of ***LRFD*** [4.6.2.2.1] for permanent loads, and in lieu of a more refined analysis, the dead load of barriers and railings applied to exterior beams and stringers (**W_{ext}**), in lb/ft, may be determined by the following equation when superstructure spans are not less than 40 feet nor more than 150 feet in length:

$$W_{ext} = W\, C_1\, C_2 / 100 \qquad \text{[Eq. 2-1]}$$

$$C_1 = 0.257 \sqrt{(S^3 (3K-8))} + ((10 - K)^2 + 39) / 1.4 \qquad \text{[Eq. 2-2]}$$

$$C_2 = 2.2 - 0.335 (L / 10) + .0279 (L / 10)^2 - 0.000793(L / 10)^3 \qquad \text{[Eq. 2-3]}$$

Where:

K = Number of beams in span, 10 maximum
L = Span length (ft)
S = Beam spacing, center-to-center (ft)
W = Total uniform dead load weight of one barrier or railing (lb/ft)

The balance of the total barrier/railing weight may be distributed equally among the interior beams or stringers.

When a barrier (or railing) is located on one side of a span only, 75% of the value of **W_{ext}** computed above may be used for the dead load of the barrier applied to the exterior beam adjacent to the barrier, and the balance of the barrier weight distributed equally among the remaining beams.

The distribution methods described above apply to concrete or steel, longitudinal beam or stringer, superstructures on which a concrete slab is cast, compositely, prior to installation of the barrier or railing. For superstructures not conforming to the limitations stated above, the barrier/railing distribution may be determined in accordance with ***LRFD [4.6.2.2]***.

Example Problem 1:
(New Construction, 2-lane bridge)
L = 100 feet
K = 6
S = 8 feet
C1 = 57.68
C2 = 0.847
W = 418 lb/ft

W_{ext} = (418 x 57.68 x 0.847) / 100 = 204 lb/ft
W_{int} = (2 x (418-204)) / (6-2) = 107 lb/ft

Example Problem 2:
(Widening from 2 to 4 lanes. Same as Example 1 except for a barrier on one side only and a longitudinal expansion joint at the junction with the existing slab.)

W_{ext} = (204)(0.75) = 153 lb/ft (at exterior beam on barrier side)
W_{int} = (418-153)/(6-1) = 53 lb/ft (all other beams)

2.9 Load Distribution Beam-Slab Bridges [4.6.2.2]

2.9.1 Prestressed Concrete Inverted Tee Girder

The live load distribution for prestressed concrete inverted tee beams can be approximated by methods contained herein as long as the following conditions are met:

A. Span lengths 30 feet to 75 feet;
B. Span to depth ratios of 22 to 38;
C. Design Slab thickness equals 6 inches;
D. No permanent intermediate diaphragms;
E. Distance **de** = -9 inches [align barrier directly above exterior beam];
F. Girder spacing equals 2 feet.

de = distance from exterior web of exterior beam and the interior edge of curb or traffic barrier.

Either the formulas or the rough approximations can be used. All live load distribution factors **(LLDF)** are in terms of lanes and are based on two or more traffic lanes loaded. For the definition of terms used in the formulas see ***LRFD* [4.6.2.2]**.

A. Bending:
1.) Rough approximation **LLDF** = 0.205

$$\mathbf{LLDF = 0.175 + (S / 9.6)^{0.01} (S / L)^{1.2} (K_g / 12 L t_s^3)^{0.1}}$$

B. Shear:
1.) Rough Approximation **LLDF** = 0.275

$$\mathbf{LLDF = 0.4104 + (S / 385)L + (S^2 / 100000)L^2}$$

2.9.2 Prestressed Concrete "U" Girder

A. The live load distribution for prestressed concrete “U” beams can be approximated by methods contained herein as long as the following conditions are met:
1.) Span Lengths 70 feet to 160 feet;
2.) Span to depth ratios of 18.5 to 26.4;
3.) 2 or more beam units;
4.) Slab thickness of 8-inches to 9-inches;
5.) No permanent intermediate diaphragms;
6.) Distance ***de*** <= 3.0 feet.

B. Either the formulas or the rough approximations can be used. All live load distribution factors (**LLDF**) are in terms of lanes and are based on 2 or more traffic lanes loaded.

C. Bending:
1.) Rough Approximation, Interior and Exterior Girders.
Use interpolation to extract **LLDF** for the exact beam spacing.

Girder Spacing	**LLDF**
25 feet	1.46
20 feet	1.18
15 feet	1.02
10 feet	0.96

2.) Formulas
Two beams

$$\mathbf{LLDF = 0.96 + 107.2 (S\ d / 12 L^2)^{1.31}}$$

Three or More Girders, Exterior

$$\mathbf{LLDF = 0.45 + 15.6\ (S\ d\ /\ 12\ L^2)^{0.67}}$$

Three or More Girders, Interiors

$$\mathbf{LLDF = 0.8 + 522.4\ (S\ d\ /\ 12\ L^2)^{1.59}}$$

D. Shear

1.) Rough Approximation, Interior and Exterior Girders.

Use interpolation to extract **LLDF** for the exact beam spacing.

Girder Spacing	LLDF
25 feet	1.69
20 feet	1.39
15 feet	1.17
10 feet	1.0

2.) Formulas

Two beams

$$\mathbf{LLDF = 3.977\ (Sd\ /\ 12\ L^2)^{0.23}}$$

Three or More Girders; Exterior

$$\mathbf{LLDF = 0.1 + 4.266\ (Sd\ /\ 12\ L^2)^{0.26}}$$

Three or More Girders; Interior

$$\mathbf{LLDF = 0.1 + 10.85\ (Sd\ /\ 12\ L^2)^{0.45}}$$

2.10 Operational Importance [1.3.5]

A. Unless otherwise approved in writing by the State Structures Design Engineer, the value of the Operational Importance Factor (η_1) in ***LRFD*** **[1.3.5]** for the strength limit state is: η_1 = 1.0 for all bridges.

B. Bridges considered critical to the survival of major communities, or to the security and defense of the United States, should utilize a higher value for η_1.

2.11 Vessel Collision [3.14]

2.11.1 General [3.14.1]

The design of all bridges over navigable waters must include consideration for possible Vessel Collision (usually from barges or ocean going ships). Conduct a vessel risk analysis to determine the most economical method for protecting the bridge. The marine vessel traffic characteristics are available for bridges located across intracoastal waterways and rivers carrying predominately barges. The number of vessel passages and the vessel sizes are embedded as an integral part of the Department's Vessel Collision Risk Analysis Software. The importance classification is provided for existing bridge sites and will be provided by the Department for any new bridge location. Port facilities and small terminals handling ships are not covered by the catalog of vessel traffic characteristics. In these cases, on-site investigation is required to establish the vessel traffic characteristics. Utilize the ***LRFD*** specification and comply with the procedure described hereinafter.

2.11.2 Research and Information Assembly

(When not provided by the Department)

A. Data Sources:
1.) U.S. Army Corps of Engineers, Waterborne Commerce Statistics Center, P.O. Box 61280, New Orleans, LA 70161. Telephone: (504) 862-1472.
2.) U.S. Army Corps of Engineers, "Waterborne Commerce of the United States (WCUS), Parts 1 & 2," Water Resources Support Center (WRSC), Fort Belvoir, VA.
3.) U.S. Army Corps of Engineers, "Waterborne Transportation Lines of the United States," WRSC, Fort Belvoir, VA.
4.) U.S. Army Corps of Engineers (COE), District Offices.
5.) U.S. Coast Guard, Marine Safety Office (MSO).
6.) Port Authorities and Water Dependent Industries.
7.) Pilot Associations and Merchant Marine Organizations.
8.) National Oceanic and Atmospheric Administration (NOAA), "Tidal Current Tables; Tidal Current Charts and Nautical Charts," National Ocean Service, Rockville, Maryland.
9.) Bridge tender record for bascule bridge at the District Maintenance Office.
10.) Local tug and barge companies.

B. Assembly of Information:
The EOR must assemble the following information:
1.) Characteristics of the waterway including:
a.) Nautical chart of the waterway.
b.) Type and geometry of bridge.
c.) Preliminary plan and elevation drawings depicting the number, size and location of the proposed piers, navigation channel, width, depth and geometry.
d.) Average current velocity across the waterway.
2.) Characteristics of the vessels and traffic including:
a.) Ship, tug and barge sizes (length, width and height)
b.) Number of passages for ships, tugs and barges per year (last five years and prediction to end of 25 years in the future).
c.) Vessel displacements.
d.) Cargo displacements (deadweight tonnage).
e.) Draft (depth below the waterline) of ships, tugs and barges.
f.) The overall length and speed of tow.
3.) Accident reports.
4.) Bridge Importance Classification.

2.11.3 Design Vessel [3.14.4][3.14.5.3]

When utilizing the FDOT's Mathcad software for conducting the Vessel Collision risk analysis, a "Design Vessel," which represents all the vessels, is not required. The software computes the risk of collision for several vessel groups with every pier. When calculating the geometric probability, the overall length of each vessel group (LOA) is used instead of the LOA of a single "Design Vessel."

2.11.4 Design Methodology - Damage Permitted [3.14.13]

In addition to utilizing the general design recommendations presented in ***LRFD*** (except as noted herein), the EOR must also use the following design methodology:

A. At least one iteration of secondary effects in columns must be included; i.e., axial load times the initial lateral deflection.

B. The analysis must include the effects of force transfer to the superstructure. Bearings, including neoprene pads, transfer lateral forces to the superstructure. Analysis of force transfer through the mechanisms at the superstructure/ substructure interface must be evaluated by use of generally accepted theory and practice.

C. The ultimate bearing capacity (UBC) of axially loaded piles must be limited to the compressive and/or tensile loads determined in accordance with the requirements of ***SDG*** Chapter 3. Load redistribution must not be permitted when the axial pile capacity is reached; rather, axial capacity must be limited to the ultimate limit as established by analysis.

D. Lateral soil-pile response must be determined by concepts utilizing a coefficient of sub-grade modulus provided or approved by the Geotechnical Engineer. Group effects must be considered.

E. For the designer's Vessel Collision risk analysis, the FDOT will determine whether a bridge is critical or non-critical. A list is provided with the Department's software.

F. Use Load Combination "Extreme Event II" as follows:

(Permanent Loads) + WA+FR+CV

With all load factors equal to 1.0. Nonlinear structural effects must be included and can be significant. It is anticipated that the entire substructure (including piles) may have to be replaced and the superstructure repaired if a bridge is subjected to this design impact load; however, the superstructure must not collapse.

Commentary: Further refinement or complication of this load case is unwarranted.

2.11.5 Widenings

Major widening of bridges spanning navigable waterways must be designed for Vessel Collision. Minor widenings of bridges spanning navigable waterways will be considered on an individual basis for Vessel Collision design requirements.

2.11.6 Movable Bridges

For movable bridges, comply with the requirements of this chapter.

2.11.7 Main Span Length

The length of the main span between centerlines of piers at the navigable channel must be based upon the Coast Guard requirements, the Vessel Collision risk analysis (in conjunction with a least-cost analysis), and aesthetic considerations.

2.11.8 Scour with Vessel Collision [3.14.1]

A. Substructures must be designed for an extreme Vessel Collision load by a ship or barge simultaneous with scour. Design the substructure to withstand the following two Load/Scour (LS) combinations:

1.) Load/Scour Combination 1:

$LS_{(1)}$ = Vessel Collision @ ½ Long-Term Scour [Eq. 3-4]

Where:

Vessel Collision: Assumed to occur at normal operating speed.

Long-Term Scour: Defined in Chapter 4 of the FDOT ***Drainage Manual*** (Topic No. 625-040-001).

2.) Load/Scour Combination 2:

$LS_{(2)}$ = Minimum Impact Vessel @ ½ 100-Year Scour Eq. 3-5]

Where:

Min. Impact Vessel as defined in ***LRFD*** [3.14.1] with related collision speed.

100-Year Scour as defined in Chapter 4 of the FDOT ***Drainage Manual*** (Topic No. 625-040-001).

B. When preparing the soil models for computing the substructure strengths, and when otherwise modeling stiffness, analyze and assign soil strength parameters to the soil depth that is subject to Local and Contraction Scour that may have filled back in. The soil model must utilize strength characteristics over this depth that are compatible with the type soil that would be present after having been hydraulically redeposited.

Commentary: In many cases, there may be little difference between the soil strength of the natural streambed and that of the soil that is redeposited subsequent to a scour event.

2.11.9 Application of Impact Forces [3.14.14]

When the length to width ratio (**L/W**) is 2.0 or greater for long narrow footings in the waterway, apply the longitudinal force within the limits of the distance that is equal to the length minus twice the width, (**L-2W**), in accordance with Figure 2-1.

Figure 2-1 Footing with Long to Short Ratio of 2.0 or greater

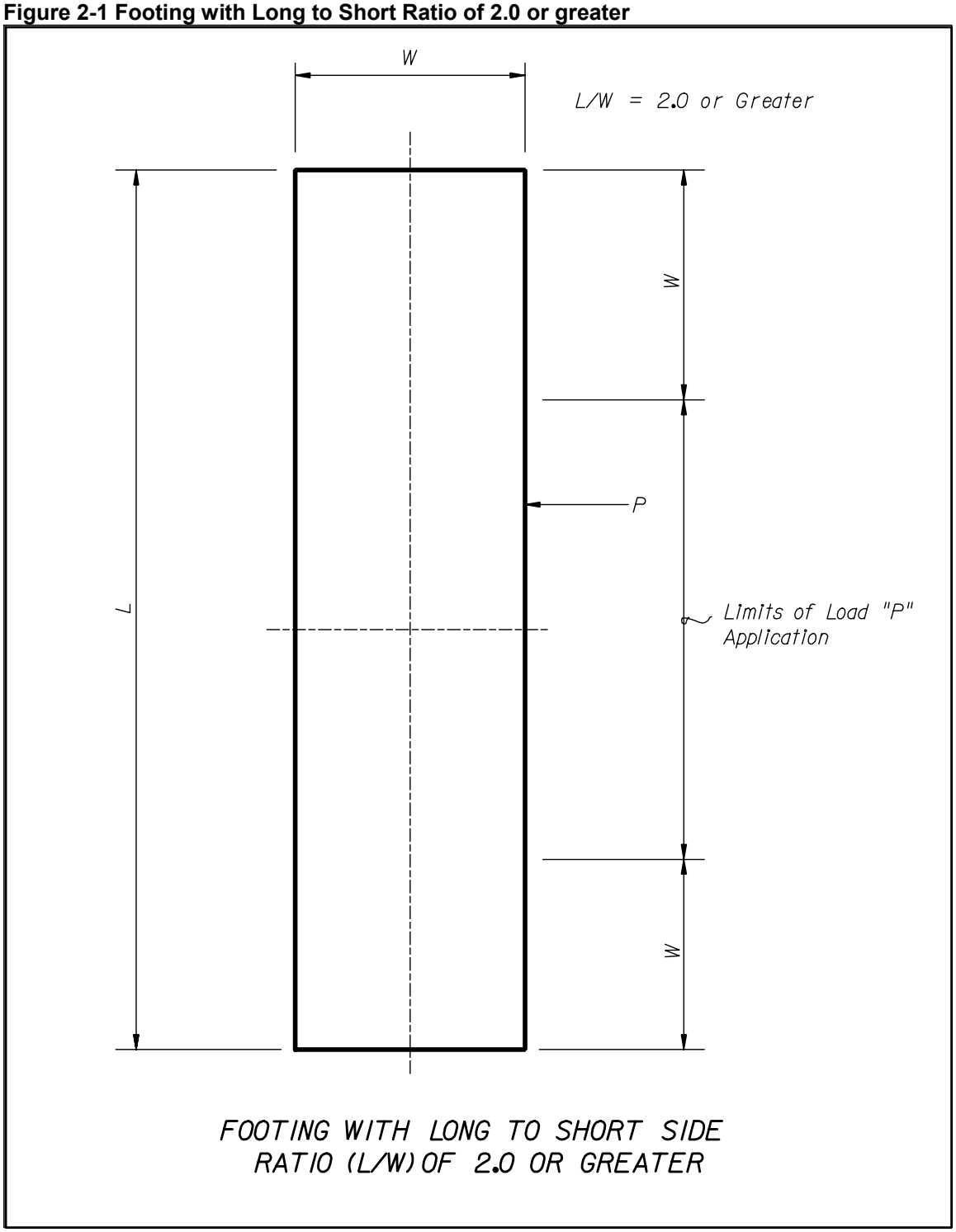

2.11.10 Impact Forces on Superstructure [3.14.14.2]

Apply Vessel Impact Forces (superstructure) in accordance with ***LRFD*** **[3.14.14.2]**.

2.12 Substructure Limit States

A. Limit State 1 (Always required - Scour may be "0")
Conventional ***LRFD*** loadings (using load factor combination groups as specified in ***LRFD*** Table 3.4.1-1), but utilizing the most severe case of scour up to and including that from a 100 year flood event.

B. Limit State 2 (Applies only if vessel collision force is specified)
Extreme event of Vessel Impact (using load factor combination groups as specified in the ***LRFD***) utilizing scour depths described in Section 2.11, “Scour with Vessel Collision.”

C. Limit State 3 (Applies only if scour is predicted)
Stability check during the superflood (most severe case of scour up to and including that from the 500-year flood) event.

Limit State 3

$$Y_p(DC) + Y_p(DW) + Y_p(EH) + 0.5(L) + 0.5(EL) + 1.0(WA) + 1.0(FR) \quad \text{[Eq. 4-1]}$$

Where, $L = LL + IM + CE + BR + PL$

(All terms as per **LRFD**)

2.13 Pedestrian Live Load on Pedestrian Bridges

Design main supporting members for a pedestrian live load of 85 pounds per square foot of bridge walkway area. No reduction in pedestrian live load is permitted.

Chapter 3 Substructure and Retaining Walls

3.1 General

A. This Chapter supplements ***LRFD*** Sections [2] and [10] and contains deviations from those sections. This Chapter also contains information and requirements related to soil properties, foundation types and design criteria, fender pile considerations, and cofferdam design criteria to be used in the design of bridge structures.

B. The Structural Engineer, utilizing input from the Geotechnical and Hydraulic Engineers, must determine the structure loads and the pile/shaft section or spread footing configuration. Auger cast-in-place piles may be used only for Sound Barrier or Privacy Wall foundations; all other uses require a design variance approval by the State Structures Design Engineer.

C. The Structural Engineer and the Geotechnical Engineer must consider constructability in the selection of the foundation system. Issues such as existing underground and overhead utilities, pile-type availability, use of existing structures for construction equipment, phase construction, conflicts with existing piles and structures, effects on adjacent structures, etc. must be considered in evaluating foundation design.

D. Design all substructures to incorporate bearings or provide fixed connections to the superstructure but do not use "Freyssinet" or other concrete hinges.

3.2 Geotechnical Report

A. The District Geotechnical Engineer or the contracted Geotechnical firm will issue a Geotechnical Report for most projects. This report will include:
   1.) Detailed Soil conditions.
   2.) Foundation recommendations.
   3.) Design parameters.
   4.) Constructability considerations.
   5.) Background information that may assist the Structural Engineer in determining appropriate pile lengths.
   6.) Input data for COM624, FBPier, and other design programs when lateral loads are a major concern.
   7.) Completed FHWA Report ***Checklist and Guidelines for Review of Geotechnical Reports and Preliminary Plans and Specifications***.
   8.) Core boring drawings reflecting the foundation data acquired from field investigations.
   9.) Required Load tests.

B. The Geotechnical Engineer will contact the District Construction Office and District Geotechnical Engineer, as needed, to obtain local, site-specific foundation construction history.

C. The Report will be prepared in accordance with the Department's ***Soils and Foundations Handbook.*** Geotechnical Reports will conform to the ***FHWA Report Checklist and Guidelines for Review of Geotechnical Reports and Preliminary Plans and Specifications*** prepared by the Geotechnical and Materials Branch, FHWA, Washington, D.C., October 1985. Contact the District Geotechnical Engineer to receive a copy of this document.

D. In the event that a contracted geotechnical firm prepares the Geotechnical Report, both the State and District Geotechnical Engineers generally will review it for Category 2 Structures and the District Geotechnical Engineer for Category 1 Structures (See the ***Plans Preparation Manual***, Volume I, Chapter 26 for category definitions).

E. Final acceptance of the report is contingent upon the District Geotechnical Engineer's approval. Concurrence by the State Geotechnical Engineer is required for all Category 2 Structures.

F. The contracted Geotechnical will work with the District Geotechnical Engineer throughout the course of the geotechnical activities.

G. Verify the scope of services, as well as the proposed field and laboratory investigations, with the District Geotechnical Engineer before beginning any operations.

3.3 - Foundation Scour Design [2.6]

A. This is a multi-discipline effort involving Geotechnical, Structures, and Hydraulics/Coastal Engineers. The process described below will often require several iterations. The foundation design must satisfactorily address the various scour conditions, and furnish sufficient information for the Contractor to provide adequate equipment and construction procedures. These three engineering disciplines have specific responsibilities in considering scour as a step in the foundation design process.

1.) The Structures Engineer determines the preliminary design configuration of a bridge structure utilizing all available geotechnical and hydraulic data and performs lateral stability evaluations for the applicable loadings described in ***SDG*** 2.12 Substructure Limit States, (do not impose arbitrary deflection limits except on movable bridges). A preliminary lateral stability analysis generally will occur during the BDR phase of the project, and a final evaluation will occur subsequent to the selection of the final configurations. The Structures Engineer must apply sound engineering judgment in comparing results obtained from scour computations with available hydrological, hydraulic, and geotechnical data to achieve a reasonable and prudent design.

2.) The Hydraulics Engineer utilizing good engineering judgment as required by HEC-18, the Hydraulics Engineer provides the worst case scour elevation through a 100-year flood event (100-Year Scour), a 500-year flood event (500-Year Scour), and for "Long-Term Scour." "Long Term Scour" is defined and described in Chapter 4 of the ***FDOT Drainage Manual.***

3.) The Geotechnical Engineer provides the nominal axial (compression and tension) capacity curves, mechanical properties of the soil and foundation recommendations based on construction methods, pile availability, similar nearby projects, site access, etc.

B. It is not necessary to consider the scour effects on temporary structures unless otherwise directed by the Department.

3.4 Lateral Load [10.7.3.8][10.8.3.8]

Use a resistance factor of 1.0 for lateral analysis.

3.5 Driven Piles

3.5.1 Cylinder Piles

A. Plant produced, post-tensioned segmented cylinder piles (horizontally assembled, stressed and grouted) or pretensioned wet cast cylinder piles are allowed by the Department. Internal redundancy of segmented cylinder piles is provided by the number of strands (maximum of 3 strands per duct.) If cylinder piles are included in the final design at a water location, provide alternate designs utilizing 54-inch and 60-inch cylinder pile sizes. If cylinder piles are used in the final design on a land project and the anticipated lengths are too long for transport by truck, provide alternate designs; one for field assembled, segmented cylinder piles and another for drilled shafts or square precast piles.

B. For concrete cover on cylinder pile reinforcement, see Table 1.2 Minimum Concrete Cover Requirements.

C. For cylinder piles in water and designed for vessel impact, fill the void with concrete to prevent puncture; see 3.11.H for required plug lengths.

D. For cylinder piles on land and within the clear zone, fill the void with concrete plug to prevent puncture from vehicular impact; see 3.11.I for required plug lengths.

E. Segmented cylinder piles in water (within the splash zone) require a redundant load path for durability. For segmented cylinder piles in water, design an independent plug that develops the full capacity of the pile from 2 feet below MLW to the bottom of the bent cap.

F. Segmented cylinder piles with water line footings do not require a redundant load path for durability.

3.5.2 Minimum Sizes

A. Fender Systems: 14-inch square piling.

B. Bridges: 18-inch square piling.

C. Bridges (Extremely Aggressive Environment due to chlorides): 24-inch square piling.

D. Specify minimum 24-inch piles for "Extremely Aggressive" salt-water sites. Smaller piles may be acceptable with the approval of the District Maintenance Engineer or his designated representative. This decision is dependent upon site-specific conditions and the history of piles in the vicinity. If pile bents will be exposed to wet/dry cycles that could necessitate future jacketing, a minimum 24-inch pile must be used. The District Maintenance Engineer may grant exemptions for pedestrian bridges and fishing piers.

3.5.3 Spacing and Clearances [10.7.1.5]

Delete the first sentence of ***LRFD*** 10.7.1.5 and substitute the following:
"Minimum pile spacing (center-to-center) must be at least three times the least width of the pile measured at the ground line."

3.5.4 Downdrag [10.7.14]

A. Show the downdrag load on the plans.

B. For pile foundations, “downdrag” is the ultimate skin friction above the neutral point (the loading added to the pile due to settlement of the surrounding soils) plus the dynamic resistance above the neutral point (the resistance that must be overcome during the driving of the pile) minus the live load. The dynamic resistance typically equals 0.50 to 1.0 times the ultimate skin friction.

C. Scour may or may not occur as predicted; however, do not discount scourable soil layers to reduce the predicted downdrag.

3.5.5 Resistance Factors [10.5.5]

Delete ***LRFD*** Table 10.5.5-2 and substitute ***SDG*** Table 3.1 for piles.

Table 3.1 Resistance Factors for Piles (all structures)

Loading	Design Method	Construction QC Method	Resistance Factor, Φ
Compression	Davisson Capacity	PDA (EOD)	0.65
		Static Load Testing	0.75
		Statnamic Load Testing	0.70
Uplift	Skin Friction	PDA	0.55
		Static Load Testing	0.65
Lateral (Extreme Event)	FBPier[1]	Standard Specifications	1.00
		Lateral Load Test[2]	1.00

1. Or comparable lateral analysis program.
2. When uncertain soil conditions are encountered.

3.5.6 Battered Piles [10.7.1.6]

A. Plumb piles are preferred; however, if the design requires battered piles, a single batter, either parallel or perpendicular to the centerline of the cap or footing, is preferred.

B. If the design requires a compound batter, orient the pile so that the direction of batter will be perpendicular to the face of the pile.

C. With input from the Geotechnical Engineer, the Structures Engineer must evaluate the effects of length and batter on the selected pile size. Do not exceed the following maximum batters, measured as the horizontal-to-vertical ratio, "h:v":
   1.) End bents and abutments: 1:6
   2.) Piers without Ship Impact: 1:12
   3.) Intermediate bents: 1:6
   4.) Piers with Ship Impact: 1:4

Commentary: When driven on a batter, the tips of long, slender piles tend to deflect downward due to gravity. This creates undesirable flexure stresses and may lead to pile failure, especially when driving through deep water and in very soft/loose soil. Hard subsoil layers can also deflect piles outward in the direction of batter resulting in pile breakage due to flexure. The feasibility of battered piles must be determined during the design phase.

3.5.7 Minimum Tip Elevation [10.7.1.11]

The minimum pile or drilled shaft tip elevation must be the deepest of the minimum elevations that satisfy lateral stability requirements for the three limit states. The minimum tip elevation may be set lower to satisfy any unique soil conditions provided the requirements in the FDOT Soil and Foundation Handbook are met. The minimum tip must be established by the Structures Engineer with the concurrence of the Geotechnical Engineer.
Use the following procedure to establish the Minimum Tip Elevation:

A. Establish a high end bearing resistance such that the pile or shaft tip will not settle due to axial forces;

B. Apply the controlling lateral load cases, raising the pile/shaft tips until the foundation becomes unstable;

C. Add 5 feet or 20% of the penetration, whichever is less, to the penetration at which the foundation becomes unstable to establish the Minimum Tip Elevation.

Commentary:
The assumed soil-pile/shaft ultimate skin friction is not modified using this procedure. It is assumed that the difference in axial capacity predicted during this portion of the design phase versus what is established during construction is due to end bearing only.

3.5.8 Anticipated Pile Lengths [10.7.1.10]

The anticipated pile lengths are used only to estimate quantities and set test pile lengths. These lengths are determined by using the lower of the minimum tip elevations specified on the plans or the axial capacity elevations predicted by the pile capacity curves (SPT 97 Davisson Capacity Curves.)

3.5.9 Test Piles [10.7.1.13]

A. Test piles include both static and dynamic load test piles, which are driven to determine soil capacity, pile-driving system, pile drivability, production pile lengths, and driving criteria. Test piles are required for all projects unless, in the opinion of the District Geotechnical Engineer, pile-driving records for the existing structure include enough information (i.e., stroke length, hammer type, cushion type, etc.) to adequately determine the authorized pile lengths and driving criteria.

B. At least one test pile must be located approximately every 200 feet of bridge length with a minimum of two test piles per bridge structure. These requirements apply for each size and pile type in the bridge except at end bents. For bascule piers and high-level crossings that require large footings or cofferdam-type foundations, specify at least one test pile at each pier. Consider maintenance of traffic requirements, required sequence of construction, geological conditions, and pile spacing when determining the location of test piles. For phased construction, test piles should be located in the first phase of construction. The Geotechnical Engineer must verify the suitability of the test pile locations.

C. Test piles should be at least 15 feet longer than the estimated length of production piles. Additional length may be required by the load frame geometry when static load tests are used.

The Structural Engineer must coordinate his recommended test pile lengths and locations with the District Geotechnical Engineer and Geotechnical Consultant, before finalization of the plans.

Commentary:
*Test piles are exploratory in nature and may be driven harder, deeper, and to a greater bearing value than required for permanent piling or may be used to establish soil freeze parameters. (See **FDOT Specifications Section 455**). The Structures Engineer must consider these facts when establishing test pile lengths.*

3.5.10 Load Tests [10.7.3.6][10.8.3.6]

A. Load test options include static load tests, dynamic load tests, Osterberg load tests, and Statnamic load tests. Both design phase and construction phase load testing should be investigated. When evaluating the benefits and costs of load tests, consider soil stratigraphy, design loads, foundation type and number, type of loading, testing equipment, and mobilization.

Commentary: In general, the more variable the subsurface profile, the less cost-effective static load tests are. When soil variability is an issue, other options include additional field exploration, more laboratory samples, in-situ testing, and pullout tests.

B. Static Load Test [10.7.3.6]: When static load tests are required, show on the plans: the number of required tests, the pile or shaft type and size, and test loads. Piles must be dynamically load tested before static load testing. Static load tests should test the pile or drilled shaft to failure as required in ***Section 455-2*** of the Specifications. The maximum loading of the static load test must exceed the nominal capacity of the pile or twice the factored design load, whichever is greater.

Commentary: Test piles or drilled shafts can be subjected to static compression, tension, or lateral test loads. Static load tests may be desirable when foundation investigations reveal sites where the soils cause concern regarding the development of the required pile capacity at the desired depths, and/or the possibility that considerable cost savings will result if higher soil capacities can be obtained. Furthermore, static load tests will reduce the driving effort since a higher Performance Factor is applied to the Ultimate Bearing Capacity formula.

C. Dynamic Load Test [10.7.1.15]: All test piles must have dynamic load tests. Indicate this requirement with a note on the foundation layout sheet.

Commentary: Dynamic load testing of piles employs strain transducers and accelerometers to measure pile force and acceleration during driving operations. A Pile Driving Analyzer (PDA) unit (or similar) is used for this purpose.

D. Statnamic Load Test: When Statnamic load tests are required, show on the plans: the number of required tests, the size and type of pile or shaft, and test loads. Piles must be dynamically load tested before Statnamic load testing. Equivalent static load tests derived from Statnamic load tests should test the pile or drilled shaft to failure as required in ***Section 455-2*** of the Specifications. The maximum derived static loading must exceed the nominal capacity of the pile or twice the factored design load, whichever is greater.

E. Special Considerations: Load testing of foundations that will be subjected to subsequent scour activity requires special attention. The necessity of isolating the resistance of the scourable material from the load test results must be considered.

3.5.11 Pile Driving Resistance [10.7.1.3]

A. The Geotechnical Engineer calculates the required Nominal Bearing Resistance (**Q_n**) as:

(Factored Design Load + Net Scour + Downdrag)/ $\Phi < Q_n$ [Eq 3-1]

Where: Φ is the resistance factor taken from Table 3.1.

B. Typically, **Q_n** will be the required driving resistance. Nominal Bearing Capacity values given in the Pile Installation Table must not exceed the following values unless specific justification is provided and accepted by the Department's District Geotechnical Engineer for Category I structures or the State Geotechnical Engineer for Category II structures:

Table 3.2 Maximum Pile Driving Resistance

Pile Size	Capacity (tons)
18-inch	300
20-inch	360
24-inch	450
30-inch	600
54-inch concrete cylinder	1550
60-inch concrete cylinder	2000

C. When the minimum tip requirements govern over bearing requirements, construction methods may need to be modified so that pile-driving resistance never exceeds the values given above. Construction methods such as preforming or jetting may be required at these locations. See the Pile Data Table in the ***Structures Detailing Manual Examples***.

D. The values listed above are based on upper bound driving resistance of typical driving equipment. The maximum driving resistance values listed above should not be considered default values for design. These values may not be achievable in certain areas of Florida based on subsoil conditions. Local experience may dictate designs utilizing substantially reduced ultimate bearing loads. Contact the District Geotechnical Engineer for guidance in the project area.

3.5.12 Pile Jetting and Preforming

A. When jetting or preforming is allowed, the depth of jetting or preforming must comply with all the design criteria. For projects with scour, jetting or preforming will not normally be permitted below the 100-year scour elevation (**EL_{100}**). If jetting or preforming elevations are deeper than **EL_{100},** the lateral confinement around the pile must be restored to **EL_{100}**. If jetting or preforming is utilized, the Net Scour Resistance to that depth is assumed to be equal to 0.0 kips (provided the hole remains open or continuous jetting is being done).

B. Verify that jetting will not violate environmental permits before specifying it in the contract documents.

3.5.13 Pile Data Table

A. Include in the plans, a Pile Data Table and notes as shown on ***SDME EX-7b***.

B. For items that do not apply, place "N/A" in the column but do not revise or modify the table.

C. Round loads to the nearest ton. Round elevations and pile lengths to the nearest foot.

D. The “Pile Data Table” is not required in the Geotechnical Report; however, the Geotechnical Engineer of Record must review the information shown on the plans for these tables.

3.5.14 Plan Notes

A. Use Equation 3.1 to determine the Required Driving Resistance value (**Q_n**) for the Pile Data Table.

B. Additional Plan Notes:

1.) Minimum Tip Elevation is required _____ (reason must be completed by designer, for example: “for lateral stability”, “to minimize post-construction settlements” or "for required tension capacity").

2.) When a required jetting or preformed elevation is not shown on the table, do not jet or preform pile locations without prior written approval of the District Geotechnical Engineer. Do not advance jets or preformed pile holes deeper than the jetting or preformed elevations shown on the table without the prior approval of the District Geotechnical Engineer. If actual jetting or preforming elevations differ from those shown on the table, the District Geotechnical Engineer will determine the required driving resistance.

3.5.15 Prestressed Piling [5.13.4.3]

A. For prestressed piling not subjected to significant flexure under service or impact loading, design strand development in accordance with ***LRFD*** [5.11.4] and [5.8.2.3]. Bending that

produces cracking in the pile, such as that resulting from ship impact loading, is considered significant.

B. A 1-foot embedment is considered a pinned head condition. For the pinned pile head condition the strand development must be in accordance with ***LRFD*** [5.11.4] and [5.8.2.3].

C. For the standard, square, FDOT prestressed concrete piles (12-inch through 30-inch), a pile embedment of 48-inches into a reinforced concrete footing is considered adequate to develop the full bending capacity of the pile. The pile must be solid, (or the pile void filled with structural concrete) for a length of no less than 8 feet (4 feet of embedment length plus 4 feet below the bottom of the pile cap).

D. Grouting a pipe or reinforcing bar cage into the void can strengthen a voided pile. With this detail, the full composite section capacity of the pile and pipe/cage can be developed. The required length of this composite pile section is a function of the loading but must be no less than 8 feet (4 feet below the bottom of the pile cap).

E. Bending capacity versus pile cap embedment length relationship for prestressed piles of widths or diameters larger than 30-inches will require custom designs based upon ***LRFD*** specifications, Department approval, and may require strand development/pile embedment tests.

Commentary:
The FDOT Structures Research Center conducted full scale testing of two 30-inch square concrete piles reinforced with prestressing steel and an embedded steel pipe. The piles, which were embedded 4 feet into a reinforced pile cap, developed the calculated theoretical bending strength of the section without strand slip. See ***FDOT Report No 98-9 "Testing of Pile-to-Pile Cap Moment Connection for 30" Prestressed Concrete Pipe-Pile"****. It was concluded that the confinement effects of the pile cap serve to improve the bond characteristics of the strand.*

3.5.16 Fender Piles

A. Fender piles generally have a short life expectancy, are considered sacrificial, and no corrosion protection is required beyond the use of concrete class as shown in Table 1.3.

B. The length must meet or exceed the minimum pile penetration set forth in ***Section 455*** of the Specifications.

C. Design system with timber or concrete piles. Plastic piles are not permitted.

D. Design with wood or plastic wales. Substitute plastic wales for wood wales on a one-to-one basis. Use either 10-inch x 10-inch or 12-inch x 12-inch sizes.

Commentary:
The pile installation constructability must be reviewed by the Geotechnical Engineer to verify that the pile tips shown in the plans can be reasonably obtained by the Contractor, and the use of any penetration aids (jetting, preforming, etc.) will not jeopardize adjacent structures.

3.5.17 Steel Sheet Piles

A. Design and detail the sheet pile properties for both cold-rolled and hot-rolled sections. Design the cold-rolled section using flexural section properties that are 120% of the hot-rolled section values.

B. Detail wall components such as caps and tie-backs to work with both the hot-rolled and cold-rolled sections.

C. Indicate on the plans:
1.) Minimum tip elevations (ft).
2.) Minimum section modulus (in^3/ft).
3.) Minimum moment of inertia (in^4/ft).

Commentary:
Tests have shown that cold-rolled sheet pile sections fail in bending at about 85% of their full-section capacity, while hot-rolled sections develop full capacity. There is also some question on the availability of hot-rolled sheet piles; so, by showing the required properties for both types, the Contractor can furnish whichever is available.

3.6 Drilled Shafts

3.6.1 Minimum Sizes

The minimum diameter size for drilled shafts is 36-inches.

3.6.2 Downdrag

A. Show the downdrag load on the plans.

B. For drilled shaft foundations, “downdrag” is the ultimate skin friction above the neutral point (the loading added to the drilled shaft due to settlement of the surrounding soils) minus the live load.

C. Scour may or may not occur as predicted; however, do not discount scourable soil layers to reduce the predicted downdrag.

3.6.3 Resistance Factors [10.5.5]

Delete ***LRFD*** Table 10.5.5-3 and substitute ***SDG*** Table 3.5 for drilled shafts.

Table 3.5 Resistance Factors for Drilled Shafts (Bridge Foundations)

Loading	Design Method	Construction QC Method	Resistance Factor, Φ
Compression	For soil: FHWA alpha or beta method[1]	Std Specifications	0.60
	For rock socket: McVay's method[2] neglecting end bearing	Standard Specifications	0.60
	For rock socket: McVay's method[2] including 1/3 end bearing	Standard Specifications	0.55
	For rock socket: McVay's method[2] including 1/3 end bearing	Statnamic Load Testing	0.70
	For rock socket: McVay's method[2] including 1/3 end bearing	Static Load Testing	0.75
Uplift	For soil: FHWA alpha or beta method[1]	Std Specifications	Varies[1]
	For rock socket: McVay's method[2]	Std Specifications	0.50
Lateral[3]	FBPier[4]	Std Specifications or Lateral Load Test[5]	1.00

1. Refer to FHWA-IF-99-025, soils with N<15 correction suggested by O'Neill.
2. Refer to ***FDOT Soils and Foundation Handbook.***
3. Extreme event.
4. Or comparable lateral analysis program.
5. When uncertain conditions are encountered.

3.6.4 Minimum Tip Elevation See SDG 3.5.7

3.6.5 Load Tests SDG 3.5.10

3.6.6 Drilled Shaft Data Table

A. For projects with drilled shafts, include in the plans, a Drilled Shaft Data Table. (See ***SDME EX-7a***).

B. For items that do not apply, place "N/A" in the column but do not revise or modify the table.

C. Round loads up to the next ton. Round elevations up to the next foot.

D. The “Drill Shaft Data Table” is not required in the Geotechnical Report; however, the Geotechnical Engineer of Record must review the information shown on the plans for these tables.

3.6.7 Plan Notes

For Drill Shafts with pressure-grouted tips, add the following note:

NOTE: A.H. Beck Foundation Company, Inc. owns U.S. Patent No. 6,371,698 entitled "Post Stressed Pier." You are advised that the Department has, in any case, obtained a patent license agreement with A.H. Beck Foundation Company, Inc. that provides royalty free use of U.S. Patent No. 6,371,698 in the design, manufacture and construction of the post-grouted drilled shafts on this Department project, and no royalties will be asserted by A.H. Beck Foundation Company, Inc. against the Department, the prime contractor, subcontractors, manufacturers, or suppliers as to the post-grouted drilled shafts for this project. For more information as to U.S. Patent No. 6,371,698, contact:

A.H. Beck Foundation, Inc.
5123 Blanco Road
San Antonio, Texas 78216
Phone (210) 342-5261

3.6.8 Construction Joints

For drilled shafts used in bents located in water containing more than 2000 ppm chloride, detail the shaft to extend without a construction joint a minimum of 12 feet above the Mean High Water elevation or bottom of the bent cap, whichever is lower.
Commentary: It is preferred that taller shafts extend to the bottom of the bent cap without a construction joint.

3.7 Cofferdams and Seals

A. When showing seal dimensions in the plans, show the maximum water elevation assumed for the seal design. Design the seal concrete thickness using the exceeding pressure obtained from flow net analysis performed by the Geotechnical Engineer. In the absence of a flow net analysis, use the maximum differential water head.

B. For design of the cofferdam seal, use a Load Factor of 1.0 and assume the maximum service load stresses from Table 3.6, which apply at the time of complete dewatering of the cofferdam.

C. In the event greater stress values are required, employ mechanical connectors such as weldments or shear connectors for the contact surfaces of the foundation and seal. When connectors are used to increase shear capacity, detail the connections and note the locations on the drawings. Provide substantiating calculations.

Table 3.6 Cofferdam Design Values	
Maximum service load stresses at time of complete dewatering of the cofferdam	
Maximum tension in seal concrete from hydrostatic pressure	250 psi*
Adhesive shear stress between seal concrete and concrete piles or shafts	75 psi*
Adhesive shear stress between seal concrete and steel piles or casings	36 psi*
*Values have been adjusted for appropriate Resistance Factors.	

Commentary: Generally, cofferdams are designed and detailed by the Contractor and reviewed by the EOR as a shop drawing. In many instances, however, the EOR must design the seal because it constitutes a significant load for the foundation design, and a seal quantity is often required for bidding purposes.

3.8 Spread Footing [10.5.5][01.6]

A. The Geotechnical Report will provide the maximum soil pressures, the minimum footing widths, the minimum footing embedment, and the ***LRFD*** Table 10.5.5-1 Resistance Factors (Φ).

B. Determine the factored design load and proportion the footings to provide the most cost effective design without exceeding the recommended maximum soil pressures. Communicate with the Geotechnical Engineer to insure that the corresponding settlements do not exceed the tolerable limits.

C. Require dewatering with a note on the plans when it is recommended in the Foundation Report. Dewatering is required If the ground water elevation is within 24-inches (or higher) of the bottom of the footing.

D. Verify sliding, overturning, and rotational stability of the footings.

3.9 Mass Concrete [5.10.8.3]

A. Consider Mass Concrete requirements in selecting member sizes and avoid Mass Concrete if practical; however, when its use is unavoidable, indicate which portions are Mass Concrete.

B. Mass Concrete is defined as: "Any large volume of cast-in-place or precast concrete with dimensions large enough to require that measures be taken to cope with the generation of heat and attendant volume change so as to minimize cracking."

C. When the minimum dimension of the concrete exceeds 36-inches and the ratio of volume of concrete to the surface area is greater than 12-inches, provide for mass concrete. (The surface area for this ratio includes the summation of all the surface areas of the concrete component being considered, including the full underside (bottom) surface of footings, caps, construction joints, etc.) Note volume and surface area calculations in units of feet.

D. Take precautionary measures to reduce concrete cracking in large volumes of concrete (i.e. bascule bridge substructures.) To prevent or control cracking in Mass Concrete, consider more and/or better reinforcing steel distribution, analyze the placement of construction joints, refer to other methods as outlined in ACI 207, ACI 244, and ACI 308.

E. For estimated bridge pay item quantities, include separate pay item numbers for Mass Concrete (Substructure) and Mass Concrete (Superstructure). Do not calculate seal Concrete as Mass Concrete.

3.10 Crack Control

A. Long Walls and other similar construction:
   1.) Limit the length of a section to a maximum of 30 feet between vertical construction joints. See the limits of concrete pours in tall piers elsewhere in this Chapter.
   2.) Clearly detail required construction joints on the plans.
   3.) Specify construction or expansion joints fitted with a water barrier when necessary to prevent water leakage.

B. Footings: Specify that footings be cast monolithically. Attach struts and other large attachments as secondary castings.

C. Keyways: Do not place keyways in horizontal construction joints except that a keyway will be used at the junction of a cast-in-place concrete wall and footing. Provide keyways at formed surfaces of vertical construction joints and elsewhere as necessary to transfer applied loads from one cast section to an adjacent, second pour. Specify or detail trapezoidal keyways for ease of forming and stripping. For example, a typical joint must have a keyway about 2-inches deep and about 6-inches wide (or one third the thickness of the member for members less than 18-inches in thickness) running the full length.

3.11 Pier, Column, and Footing Design

A. For tall piers or columns, detail construction joints to limit concrete lifts to 25 feet. When approved by the Department, a maximum lift of 30 feet may be allowed to avoid successive small lifts (less than approximately 16 feet) which could result in vertical bar splice conflicts or unnecessary splice length penalties.

B. Detail splices for vertical reinforcing at every horizontal construction joint; except that the splice requirement may be disregarded for any lift of 10 feet or less.

C. Coordinate the lift heights and construction joint locations with the concrete placement requirements of the specifications.

D. On structures over water, vertical post-tensioning (except in cylinder piles) cannot extend below an elevation that is 12 feet above MHW, regardless of the Environmental Classification. On structures over land, vertical post-tensioning strand cannot extend below 5 feet above finished grade (post-tensioning bars are excluded from this restriction for structures over land). This restriction excludes the use of post-tensioning from the submerged substructure (fresh or salt) to an air-dry condition within the substructure component. This applies to both CIP and/or precast substructures.

Commentary: Precast pier segments traditionally have horizontal joints every 7 to 10 feet and at least 4 tendons vertically. Even with the highest level of attention to field inspection, many joints are not watertight. Water and chloride intrusion has been documented in superstructure and substructure post-tensioned tendons in Florida. The interstice area within the 7-wire strand and the space between strands allows water and oxygen intrusion. Tendon geometry and duct placement (wobble) are factors that contribute to how much grout surrounds the tendon bundle. Forensic examinations of corroded tendons led to the conclusion that duct material must offer the primary protection for the strand material.

E. Precast pier sections with spliced sleeve connections are allowed.

F. The minimum wall thickness for segmental piers is 12-inches.

G. Where external tendons exit the bottom of pier caps, provide a one half-inch by one half-inch drip recess around the tendon duct.

H. For bridges designed for vessel collision, design pier columns to be solid concrete from 15 feet above MHW to 2 feet below MLW. Voided sections that are filled after the column is constructed may be used.

I. For all land projects, voided substructure piers and columns located within the clear zone, regardless of the presence of guardrail or barriers, must be filled with concrete to 15 feet above the finished grade.

J. Locate the bottom of all footings, excluding seals, a minimum of 12-inches below MLW. Consider lowering the footing further when the tides will consistently expose piles for extended periods.

K. All voided substructures must be sealed from possible sources of leaks and contain free-exiting drains or weep-holes to drain away water that may collect from any source including condensation.

L. Drains in voided piers may be formed using 2-inch diameter permanent plastic pipes set flush with the top of the bottom slab or solid section. Slope interior top of solid base toward drains or weep-holes. Provide weep-holes with vermin guards. Show in the Contract Drawings, locations and details for drains taking into account bridge grade and cross-slope.

M. Provide inspection access for all hollow piers. See Other Box Sections in ***SDG 4.5.2***.

Table 3.7 Required tendons for post-tensioned substructure elements:

Post-Tensioned Bridge Element	Minimum Number of Elements
Hammerhead Pier Straddle Beams C-Pier Column (Bars Only) C-Pier Cap C-Pier Footings (Bars only)	6
Hollow cast Piers I-Section Piers	8

3.12 Retaining Wall Types

A. Consider site, economics, aesthetics, maintenance and constructability when determining the appropriate wall type.

B. Partial height walls are not permitted. Walls founded at or near natural ground level should extend to the top of embankment. The embankment should not slope down to the top of the wall as this condition presents safety and maintenance issues. Walls founded in new embankment are subject to bearing, rotation, settlement, erosion and maintenance issues and should be avoided. The embankment in the outer portion is very difficult if not impossible to compact.

C. Walls subject to large short-term settlements during construction should be carefully analyzed for construction problems. Large short-term settlement is defined according to wall type; for C.I.P. walls the settlement may be as little as 1-inch and as much as 4-inches for MSE walls. Settlements in both longitudinal and transverse directions must be considered. The EOR for the project is responsible for determining the wall type to be used.

D. Walls requiring a two-faced wall system should be included in the plans along with any special soil improvement techniques and instrumentation and monitoring program. Show, on the plans, soil improvement techniques for consolidating foundation soil before wall construction.

E. The following wall types are being used or considered for use by FDOT.

3.12.1 Conventional Cast-in-Place (CIP) Walls

A. CIP walls are normally used in either a cut or fill situation. These walls are sensitive to foundation problems. The foundation soil must be capable of withstanding the design bearing pressure and must exhibit very little differential settlement. Verify that during the life of the structure the bearing capacity of the soil will not be diminished (i.e., french drains in close proximity to the walls) thus requiring pile-supported walls. This type of wall has an advantage over MSE walls because they can be built with conventional construction methods even in Extremely Aggressive Environments. Another advantage over MSE walls is on cut/widening projects where the area behind the wall is not sufficient for soil reinforcement (See Figures 3-2 and 3-3).

B. The relative cost of CIP walls is greater than MSE walls when the site and environment are appropriate for each wall type. This is assuming the area of wall is greater than 1000 square feet and greater than 10 feet in height.

3.12.2 Pile Supported Walls

A. Pile-supported walls are utilized when the foundation soil is not capable of supporting the retaining wall and associated dead and live loads on a spread footing.

B. Pile-supported retaining walls are extremely expensive compared to CIP cantilevered and MSE walls and are only appropriate when foundation soil conditions are not conducive for CIP or MSE walls. Pile supported walls are appropriate for cut or fill sites. Temporary sheeting may be required in cut sites. (See Figures 3-4 and 3-5)

3.12.3 Mechanically Stabilized Earth (MSE) Walls

A. MSE walls are not a cure-all for poor foundation soil and are not appropriate for all sites. MSE walls are very adaptable to both cut and fill conditions and will tolerate a greater degree of

differential settlement than CIP walls. Because of their adaptability, MSE walls are being used almost exclusively. The design of MSE walls with metallic reinforcement, however, is sensitive to the electrochemical properties of the back fill material and to the possibility of a change in the properties of the back fill materials due to submergence in water classified as Extremely Aggressive or from heavy fertilization. Consider using geosynthetic reinforcement in areas where the water is classified as an Extremely Aggressive Environment, when the 100-year flood can infiltrate the back fill, and when the wall is within 12 feet of the Mean High Water (MHW).

B. MSE walls are generally the most economical of all wall types when the area of retaining wall is greater than 1000 square feet, and the wall is greater than 10 feet in height. (See Figs. 3-6 and 3-7)

3.12.4 Precast Counterfort Walls

A. Precast counterfort walls are applicable in cut or fill locations. Their advantage is in cut locations such as removing front slopes under existing bridges and in certain widening applications where sheet piling would be required to stabilize excavation for earth reinforcements for MSE walls. In addition, their speed of construction is advantageous in congested areas where maintenance of traffic is a problem. This type of wall is also applicable in areas where the back fill is or can become classified as extremely corrosive.

B. This type of wall is generally not as economical as MSE walls but is competitive with CIP walls (See Figure 3-8) and may offer aesthetic and constructability advantages.

3.12.5 Steel Sheet Pile Walls

A. Steel sheet pile walls are applicable for use in permanent locations (i.e., bulkheads) but their more common use is for temporary use (i.e., phase construction). Generally steel sheet pile walls can be designed as cantilevered walls up to approximately 15 feet in height. Steel sheet pile walls over 15 feet are tied back with either prestressed soil anchors, soil nails, or dead men.

B. Steel sheet pile walls are relatively expensive initially and require periodic maintenance (i.e. painting, cathodic protection. This type of wall should only be used if there are no other more economical alternates (See Figure 3-9).

3.12.6 Concrete Sheet Piles

A. Concrete sheet piles are primarily used as bulkheads in either fresh or saltwater. Rock in close proximity to the ground surface is a concern with this type of wall as they are normally installed by jetting. Concrete sheet piles when used as bulkheads are normally tied back with dead men.

B. This type of wall is relatively costly and should only be used when less costly alternates are not appropriate or when the environment is appropriate (See Figure 3-10).

3.12.7 Wire Faced Walls

Wire faced walls are applicable in temporary situations, phase construction where large amounts of settlement are anticipated or where surcharges are required to accelerate settlement. This type of wall is a form of MSE wall. The soil reinforcement may be either steel or geogrid. Verify that proposed systems have been pre-approved. Pre-approved companies have their standard details in the ***Roadway and Traffic Design Standards*** or on the Structures Design Office's Internet Homepage (See Figure 3-11).

3.12.8 Soil Nails

The Department is allowing the use of soil nails. The relative cost of this type wall has not been determined because Contractors have yet to bid this alternate (See Figure 3-12).

3.12.9 Soldier Pile/Panel Walls

This type of wall is applicable in bulkheads and retaining walls where the environment is Extremely Aggressive and/or rock is relatively close to the ground surface. The cost of this type of wall is very competitive with concrete sheet pile walls (See Figure 3-13).

3.12.10 Modular Block Walls

Modular blocks consist of dry cast, unreinforced blocks, which are sometimes used as a gravity wall and sometimes used as a wall facing for a MSE variation normally utilizing a geogrid for soil reinforcement. The Department is considering systems of this type for low-height, non-structural applications only.

3.12.11 Geogrid Soil Reinforcement for Retaining Walls

Geogrids are presently approved for use in temporary and select (Extremely Aggressive Environments) permanent walls only. Their use in permanent walls is being reviewed. Some of the concerns about geogrids are the long term stress-strain characteristics of polymers, hydrolysis of polyesters, environmental stress cracking, and brittle rupture of polyolefins (high density polyethylene, polyethelene and polypropylene) and appropriate factors to ensure an allowable stress condition at the end of the structure's service life.

3.12.12 Permanent - Temporary Wall Combination

As more highways are widened, problems have been encountered at existing grade separation structures. The existing front slope at the existing bridge must be removed to accommodate a new lane and a retaining wall must be built under the bridge. Several methods have been used to remove the existing front slope and maintain the stability of the remaining soil. One method is to excavate slots or pits in the existing fill to accommodate soldier beams. The soil is then excavated and timber lagging is placed horizontally between the vertical soldier beams. The soldier beams are tied-back by the use of prestressed soil anchors. This procedure will maintain the soil while the permanent wall is built. The permanent wall should be designed to accept all appropriate soil, dead and live loads. The temporary lagging must not contribute to the strength of the permanent wall (See Figure 3-3).

3.12.13 Hybrid - Gravity/MSE Wall

Hybrids are basically gravity systems with some MSE characteristics. The FDOT approved system has a concrete stem that extends into the fill a sufficient length to satisfy the external stability requirement for the wall. However, due to its rigid stem, the system is sensitive to both longitudinal and transverse settlement. This system can be used in cut and/or fill applications (See Figure 3-15)

3.13 Retaining Wall Design

Use Chapter 30, ***Plans Preparation Manual*** *for* retaining wall plans preparation and administrative requirements in conjunction with the design requirements of this Section. Refer to ***SDG*** Chapter 1 for the retaining wall concrete class and reinforcing steel cover requirements. Show the retaining wall concrete class on the plans.

3.13.1 Earth Loads for Wall Design

The Rankine earth pressure may be used in lieu of lateral earth loads on walls developed from a Coulomb earth pressure. If the Rankine earth pressure is used, the resultant lateral earth load can be assumed to be located at the centroid of the earth pressure diagram.

3.13.2 Corrosion Rates [11.9.8.1]

A. Delete the corrosion rates specified in ***LRFD*** Article [11.9.8.1] and substitute the following requirements:

The following corrosion rates for metallic reinforcement apply to non-corrosive (Slightly or Moderately Aggressive) Environments only:

1.) Zinc (first 2 years)	15 microns/year
2.) Zinc (subsequent years to depletion)	four microns/year
3.) Carbon Steel (after depletion of zinc)	12 microns/year
4.) Carbon Steel (75 to 100 years)	seven microns/year

B. Do not use Metallic reinforcement in Extremely Aggressive Environments without approval from the State Structures Design Engineer.

3.13.3 Soil Reinforcement

A. Design soil reinforcement and connections for permanent walls with a design life of 75 years. Design walls supporting abutments on spread footings with a design life of 100 years.

B. Design soil reinforcement for temporary walls with a design life of not less than the contract time of the project or three years whichever is greater.

C. Maximum stress in the steel soil reinforcement is 0.55$\mathbf{F_y}$ for steel straps, and 0.48$\mathbf{F_y}$ for welded wire mats or grids. Specify ASTM A82, Grade 60 steel.

D. Analyze vertical stresses at each reinforcement level for local equilibrium of all forces acting at that level. Include the effects of any eccentricity.

E. Specify galvanized steel soil reinforcement for permanent walls. Steel soil reinforcement for temporary walls may be galvanized or uncoated (black) steel.

F. Epoxy coated reinforcement as specified in ***LRFD*** [11.9.8.1] is not permitted. Passive metal soil reinforcement (i.e., stainless steel, aluminum alloys, etc.) is permitted only with written SDO approval.

G. Geosynthetic Geogrids must comply with Chapter 31 of the ***Plans Preparation Manual, Volume I***.

H. Do not design soil reinforcement skewed more than 15 degrees from a position normal to the wall panel except in cases where there is an acute corner requiring a bin wall. In these instances, follow the pre-approved bin wall details.

I. When the 15 degree criteria cannot be met due to obstructions such as piling or drainage structures, bridge obstructions with angles, and soil reinforcement per the pre-approved details.

J. In addition to ***LRFD*** Article [11.9.5.1.4], soil reinforcement lengths, "**L**", measured from the back of the facing element, must not be less than the greater of the following:

MSE Walls and Walls in Front of Abutments on Piling [11.9.5.1.4]

L = 8 feet minimum length.
L = 0.7 **H1**, **H1** = mechanical height of wall, in feet
(See Figures 3-16 and 3-17)
L = length in feet, required for external stability design.

MSE Walls In Front of Abutments on Spread Footings [11.9.7]

L = 22 feet
L = 0.6 ***H1*** + 6 feet
L = 0.7 ***H1***

Commentary:
As a rule of thumb, for an MSE structure with reinforcement lengths equal to 70% of mechanical height, the anticipated maximum calculated bearing pressure can be anticipated to be about 135% of the overburden weight of soil and surcharge. It may be necessary to increase the reinforcement length for external stability to assure that the allowable bearing pressure specified equals or exceeds this value.

K. Soil reinforcement must not be attached to piling, and abutment piles must not be attached to any retaining wall system.

L. The horizontal soil reinforcement connection force of 85% of the maximum calculated force as stated in ***LRFD*** Article [11.5.1.2] must be modified to a minimum of 100% $\mathbf{T_{max}}$, where:

T_{max} = T_a (maximum stress in soil reinforcement)

M. Creep reduction factors in geosynthetic soil reinforcement must be included in seismic designs.

N. In addition to ***LRFD*** Article [11.9.4.3], use a soil resistance factor of 0.67 for overturning.

O. For Polymeric Reinforcements in Soils, supplement ***LRFD*** Article [11.9.5.1.3] with the following:

For geosynthetics, $\mathbf{T_a}$ must not exceed the following values:

a.) $\mathbf{T_a = 19\%\ T_{ult}}$ for permanent walls and critical temporary walls.
b.)$\mathbf{T_a = 29\%\ T_{ult}}$ for temporary walls.

3.13.4 External Stability

A. The required factors of safety for the external stability are:

1.) Overturning:	2.0
2.) Sliding:	1.5
3.) Internal Pullout:	1.5 (Allowable deformation ¾-inch)
4.) Bearing Capacity:	2.5
5.) Overall Stability:	1.5

B. The reinforced backfill soil parameters for the analyses are:
1.) Sand fill (Statewide except Dade and Monroe)
a. Moist Unit Weight: 105 lbs per cubic foot.
b. Friction Angle: 30 degrees.
2.) Limerock fill (Dade and Monroe counties only)
a. Moist Unit Weight: 115 lbs per cubic foot.
b. Friction Angle: 34 degrees.

C. For steel reinforcements:
1.) Bars and Straps:
a. 0.55 $\mathbf{F_y'}$ at end of design life.
b. 0.55$\mathbf{F_u}$ at net section of bolted connection
2.) Grids and bar mats: 0.48 $\mathbf{F_y}$

D. Maximum pullout factors:
1.) Ribbed strips: $\mathbf{f^*_{max}} = 1.5$
2.) Grids and bar mats: $\mathbf{N_{pmax}} = 30$

E. The properties for geogrids will be the same as the geogrids used for steepened slopes as shown on Index 501 of the Design Standards.

F. **H1**, the mechanical height, of an MSE structure must be taken as the height measured to the point where the potential failure plane (line of maximum tension) intersects the ground surface, as shown in Figure 3-16 and 3-17 and can be calculated using the equation provided in Figure 3-16. The methodology for this analysis is included in FHWA's Mechanically Stabilized Earth Walls and Reinforced Soil Slopes Design and Construction Guideline. In addition to the two conditions shown in AASHTO, horizontal back slope and infinite sloping backfill, Figures 3-16 and 3-17 illustrate broken back slope conditions with and without traffic surcharge. If the break in the slope behind the wall facing is located within two times the height of the wall (2**H**), then the broken back slope design must apply. If a traffic surcharge is present and is located within 0.5**H** of the back of the reinforced soil mass, then it must be included in the analysis.

G. The Geotechnical Engineer of Record for the project is responsible for designing the strap lengths for the external conditions shown in Figure 3-1 and any other conditions that are appropriate for the site.

3.13.5 Acute corners less than 75 degrees (MSE Walls)

A. When two walls intersect forming an internal angle of less than 75 degrees, design the nose section as a bin wall. Submit the calculations for this special design with the plans for review and approval.

B. Design structural connections between the wall elements within the nose section to create an at-rest bin effect without eliminating the flexibility of the facing to tolerate differential settlements. The design for connections to facing elements and allowable stresses in the connecting members must conform to the requirements for the wall design in general.

C. Design the nose section to settle differentially from the remainder of the structure with a slip joint. Facing panel overlap or interlock or rigid connection across that joint is not permitted.

D. Design soil reinforcements to restrain the nose section by connecting directly to each of the facing elements in the nose section and running back into the backfill of the main reinforced soil mass at least to a plane 10 feet beyond a Rankine failure surface.

E. Design for facing connections, obstructions, pullout and allowable stresses in the reinforcing elements must conform to the requirements of the wall design in general (See Figure 3-18).

3.13.6 Minimum Wall embedment in Soil

Consider scour and bearing capacity when determining wall embedment depth. Consult the District Drainage and Geotechnical Engineers to determine the elevation of the top of leveling pad, which must also conform to a minimum embedment to the top of leveling pad of 24-inches. Normal construction practices should be considered.

3.13.7 Apparent Coefficient of Friction

The coefficient of friction (**f***) need not be reduced for properly placed and compacted, saturated backfill.

3.13.8 Connections (MSE Walls)

Design the soil reinforcement to facing panel connection to assure full contact of the connection elements. Normally mesh and bar mats are connected to the facing panel by a pin passing through loops at the end of the reinforcement and loops inserted into the panels. If these loops are not aligned, then some reinforcement will not be in contact with the pins causing the remaining reinforcement to be unevenly stressed and/or over stressed. If the quality of this connection cannot be assured then the allowable stress in the soil reinforcement and it's connections should be reduced accordingly.

3.13.9 End Bents behind MSE Walls

A. End Bents on Piling:
   1.) All end bent piles must be plumb.
   2.) The front face of the end bent cap or footing must be a minimum distance of 24-inches behind the front face of the wall. (24-inch minimum clear distance between face of piling and leveling pad). This dimension is based upon the use of 18-inch piles. For larger piles, the clear distance between the wall and pile must be increased such that no strap is skewed more than 15 degrees.
   3.) Soil reinforcement to resist the overturning produced by the earth load, friction, and temperature must be attached to end bents. If the long-term settlement exceeds 4-inches, the reinforcement must not be attached to the end bent. In this event, a special wall behind the backwall must be designed to accommodate the earth load.

B. End Bents on Spread Footings:
   1.) The spread footing must be sized so that the bearing pressure does not exceed 3000 psf.
   2.) The footing must be a minimum 12-inches behind the facing panel.
   3.) The minimum distance between the centerline of bearing on the end bent and the back of the facing panel must be 48-inches.

3.13.10 Facing Panels (MSE Walls) [11.9.5.1.6]

The basic (typical) panel size must not exceed 40 square feet in area, and special panels (top out, etc.) must not exceed 50 square feet in area. Full-height facing panels must not exceed 8 feet in height. SDO will consider use of larger panels on a case-by-case basis. The reinforcing steel concrete cover must comply with ***SDG*** Table 1.2.

3.13.11 Utilities

A. During the design process, review wall locations for conflicts with existing or proposed utilities located beneath proposed reinforced fill wall volume. Analyze for settlement effects, maintenance repair access, etc.

B. Do not place utilities in the soil-reinforced zone behind MSE or tie-back walls.

Commentary: Utilities placed in the reinforced zone cannot be maintained because excavation in this zone will compromise the structural integrity of these wall types. In addition, leaking pipes could wash out and destroy the structural integrity.

3.13.12 Minimum Front Face Embedment

The minimum front face embedment must comply with Figure 3-19.

Figure 3-1 Proprietary Retaining Walls

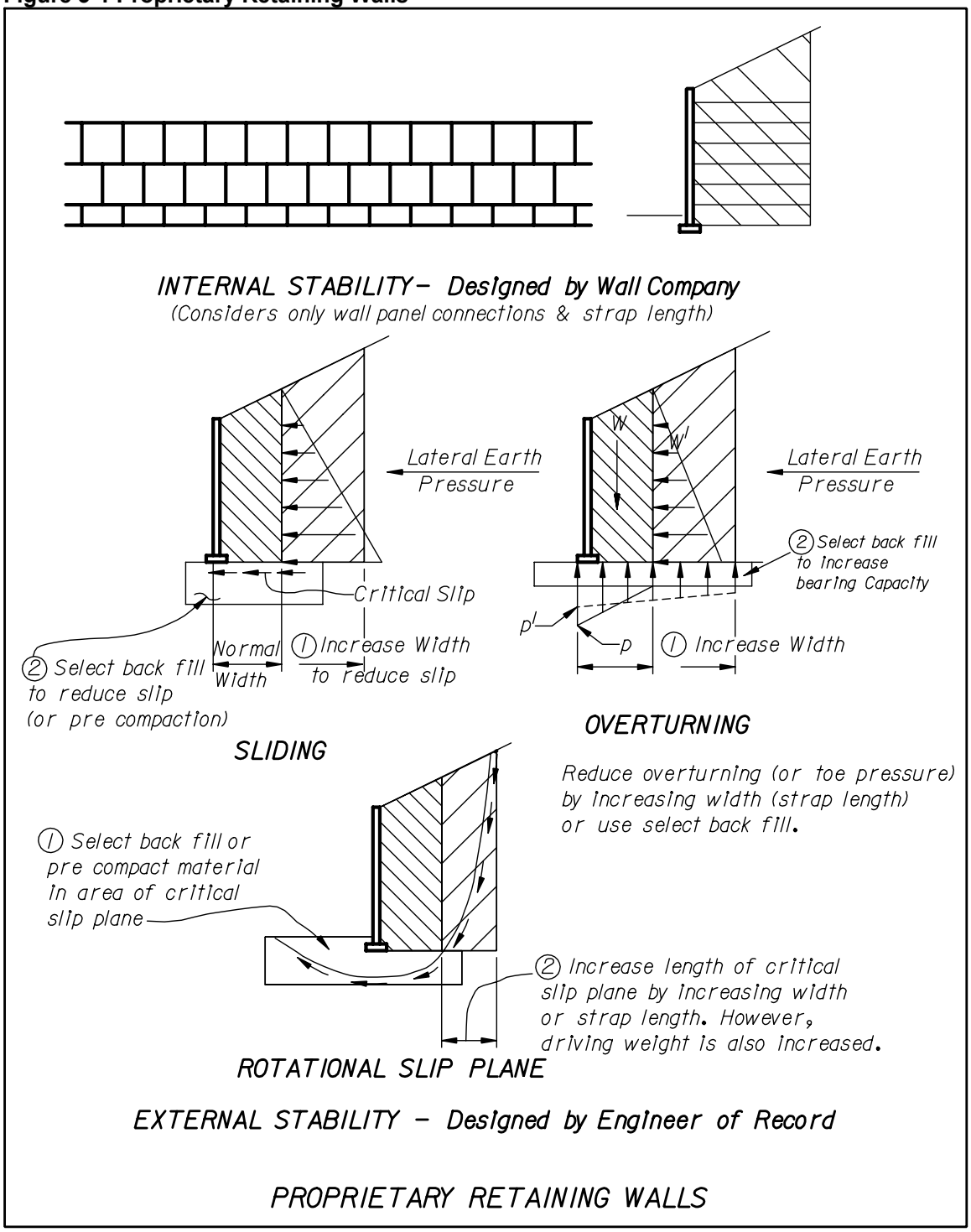

Figure 3-2 Cast-in-Place Wall (Fill Location)

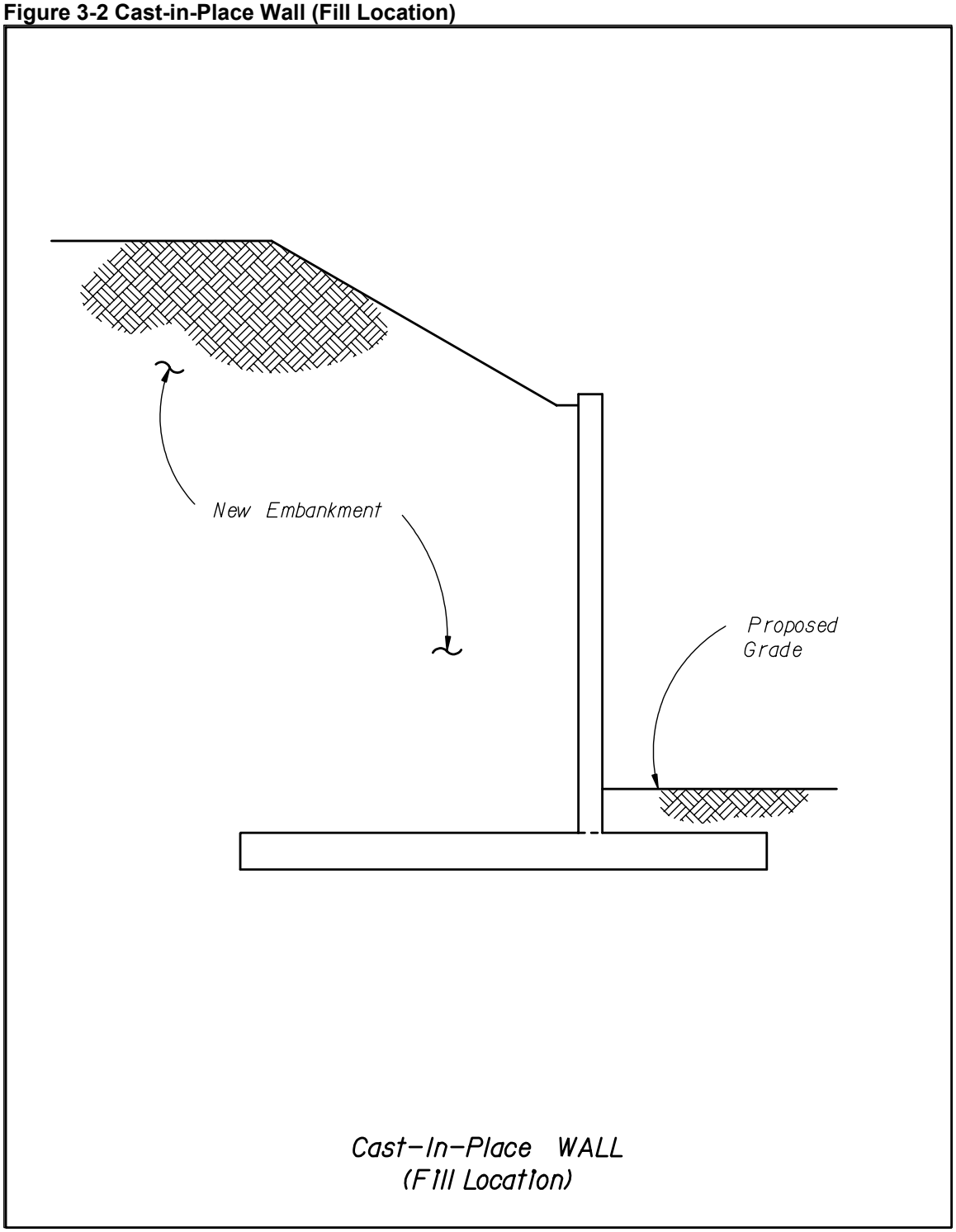

Figure 3-3 Cast-in-Place Wall (Cut Locations)

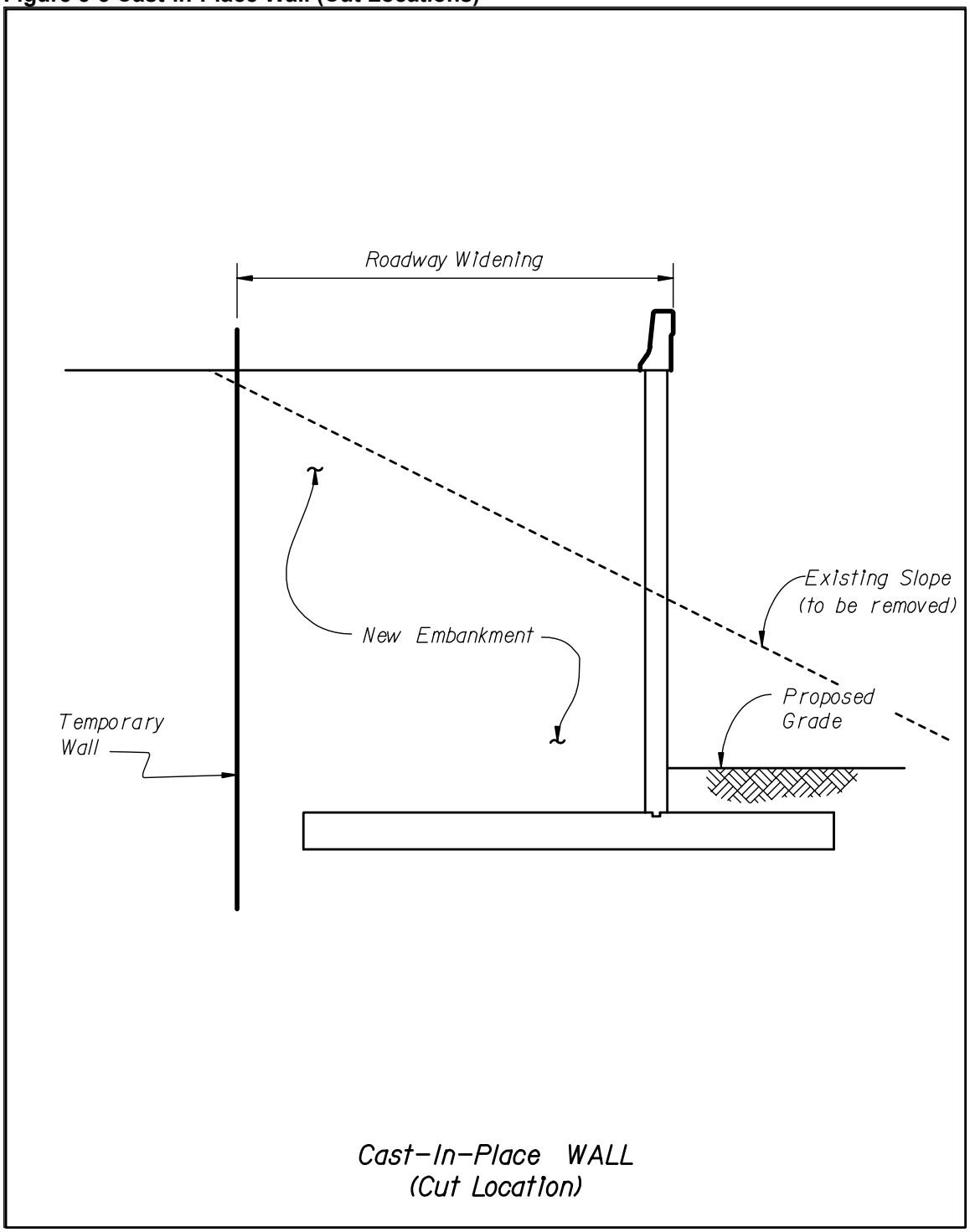

Figure 3-4 Cast-in-Place Wall (Fill Location)

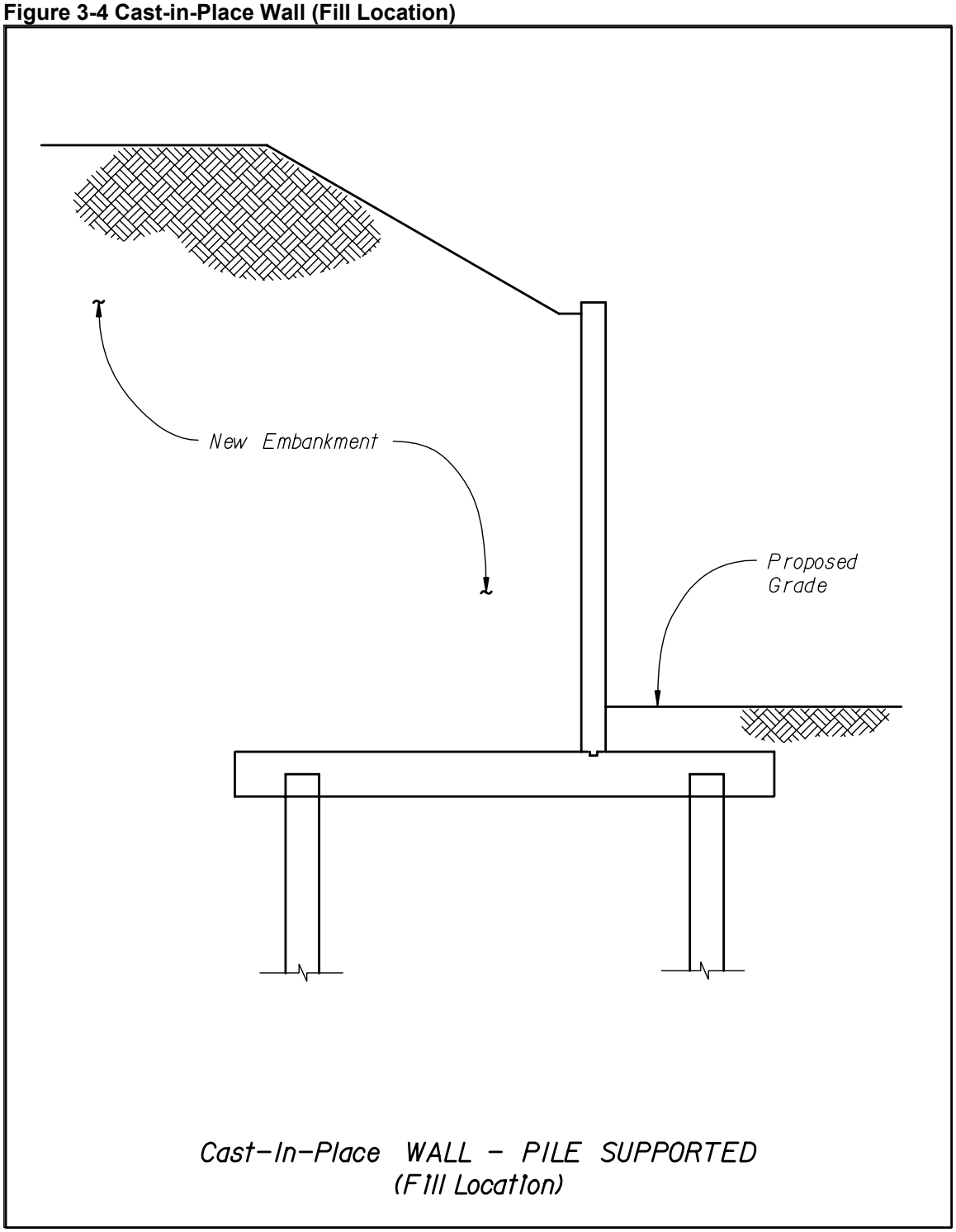

Figure 3-5 Cast-in-Place Wall (Cut Location)

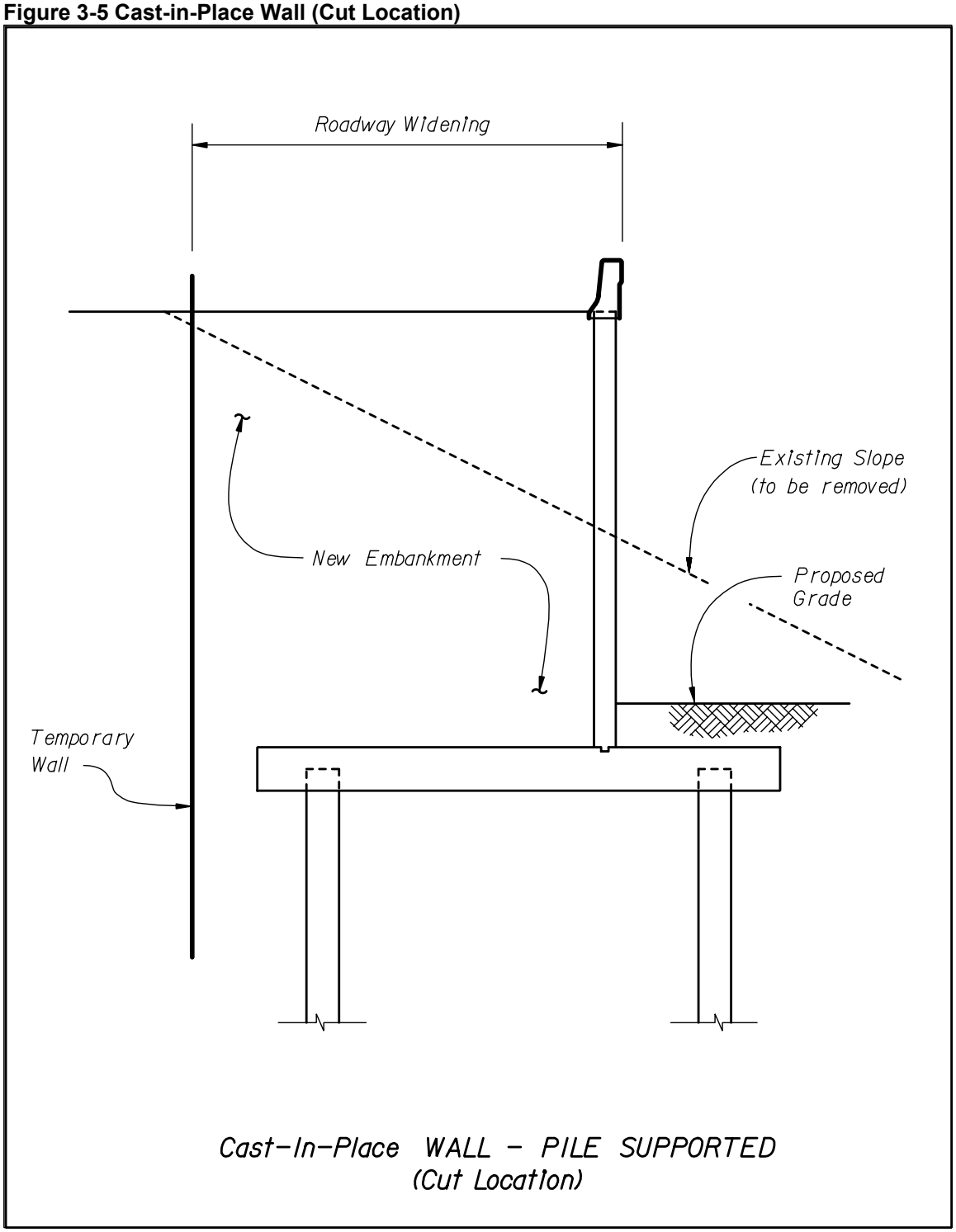

Figure 3-6 MSE (Fill Location)

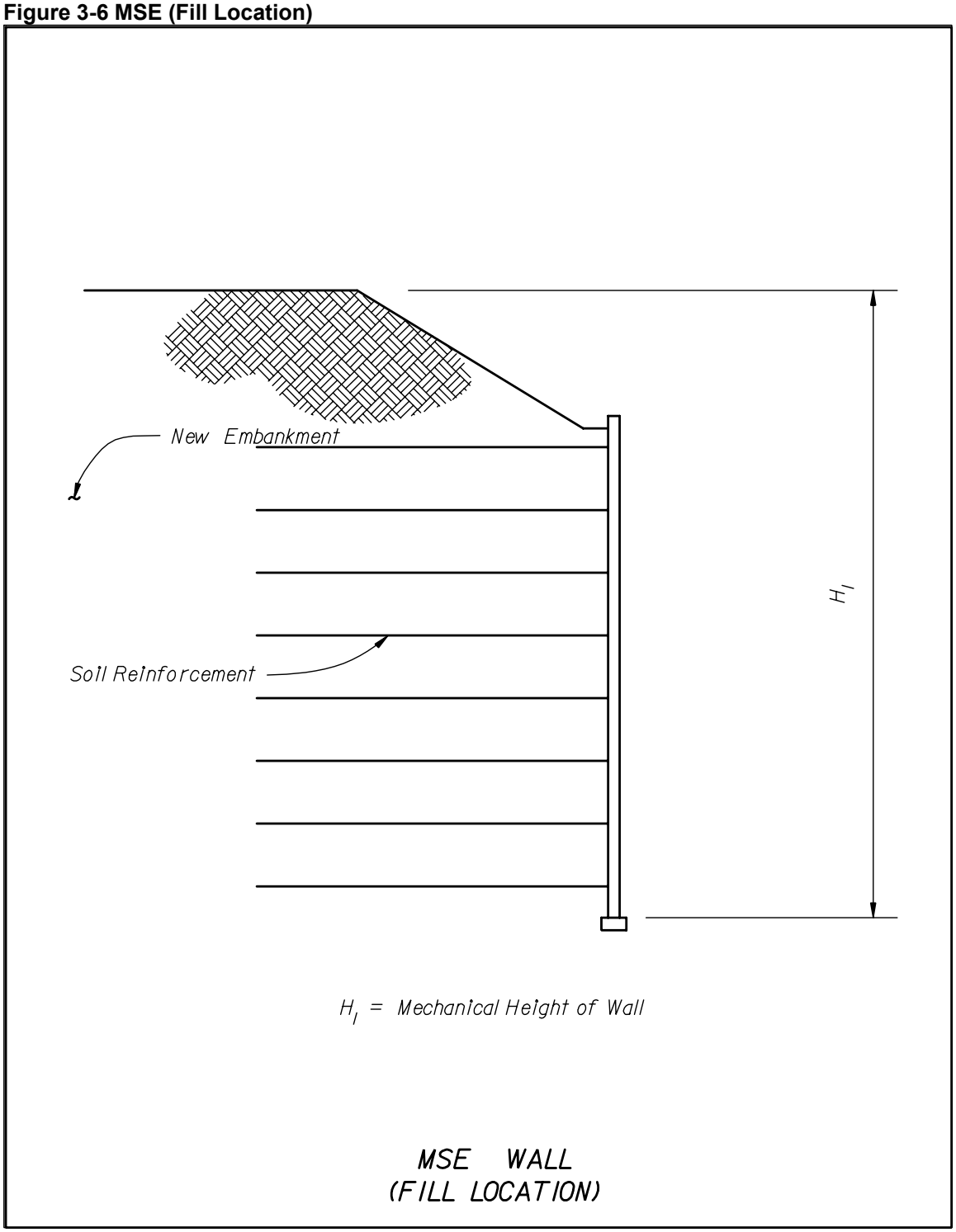

Figure 3-7 MSE Wall (Cut Location)

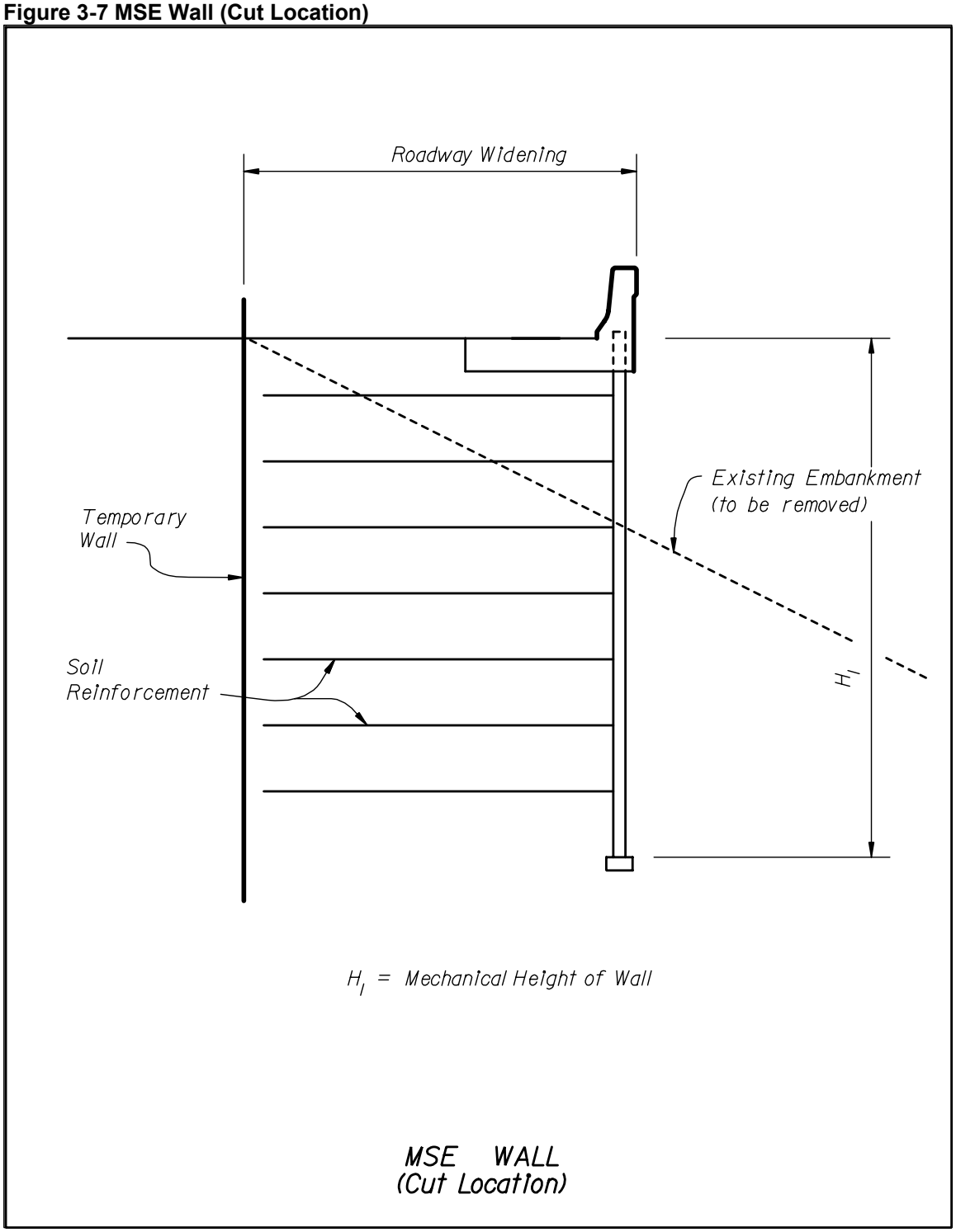

Figure 3-8 Precast Counterfort Wall

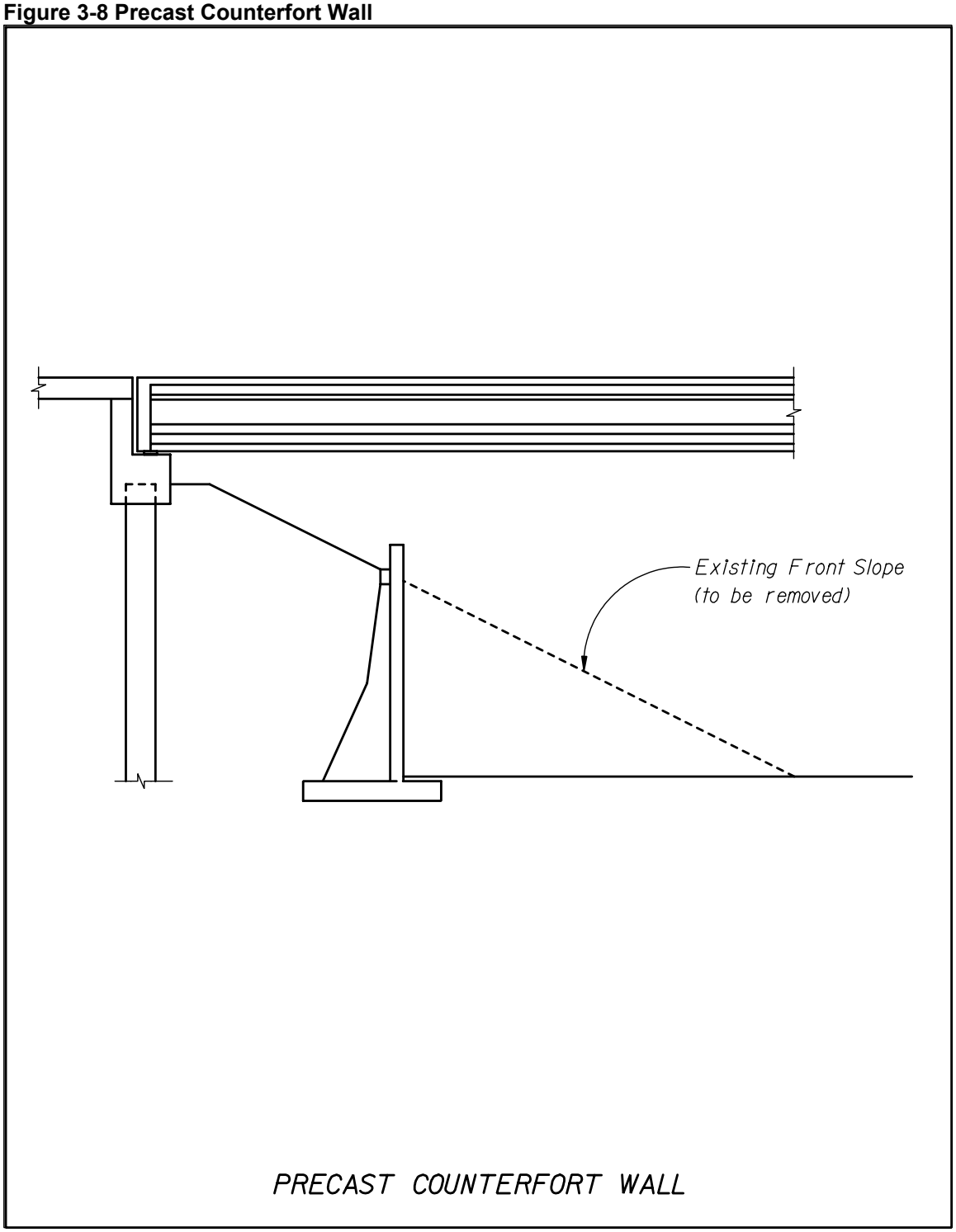

Figure 3-9 Tieback Components (Steel Sheet Piles)

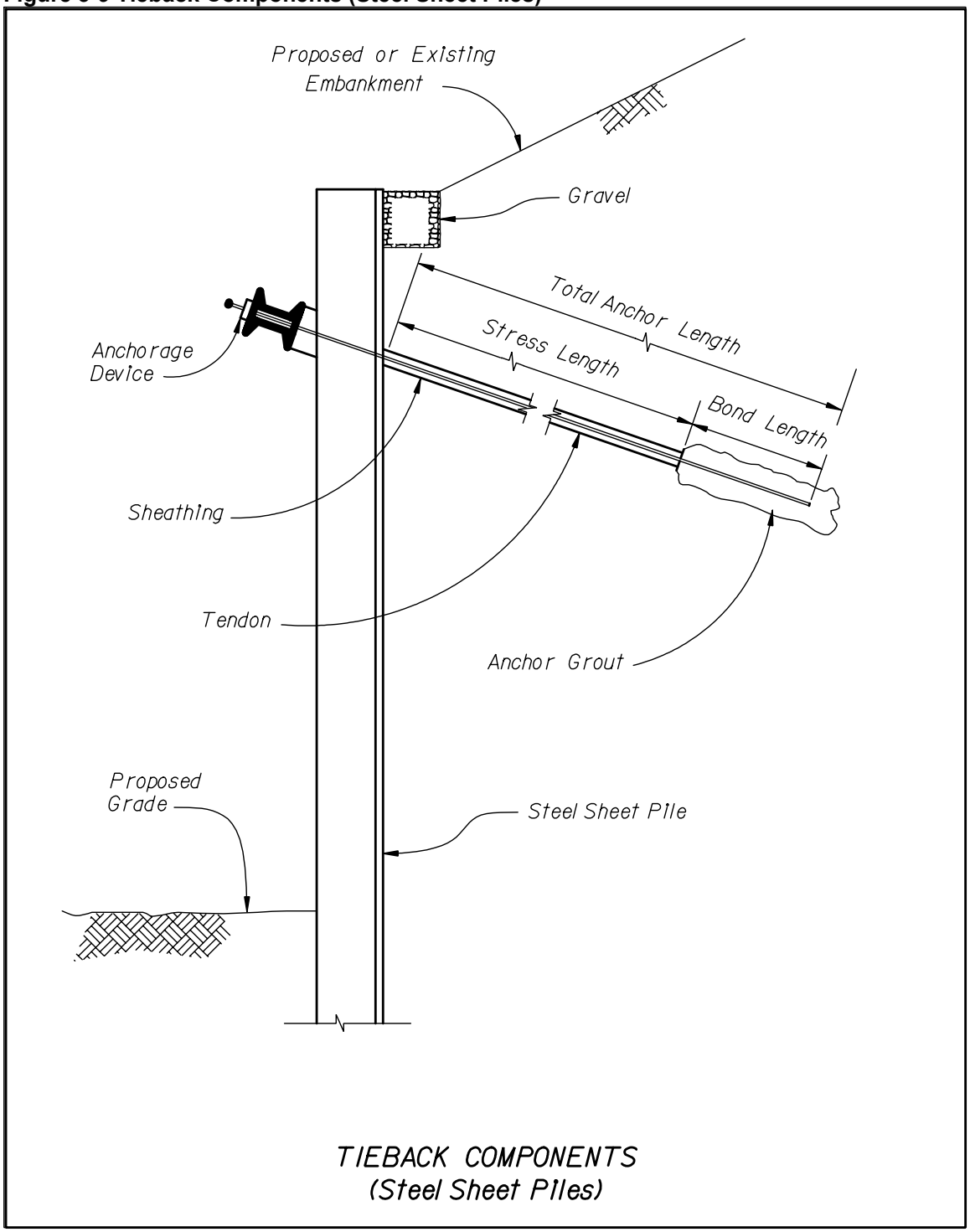

Figure 3-10 Concrete Sheet Pile Bulkhead

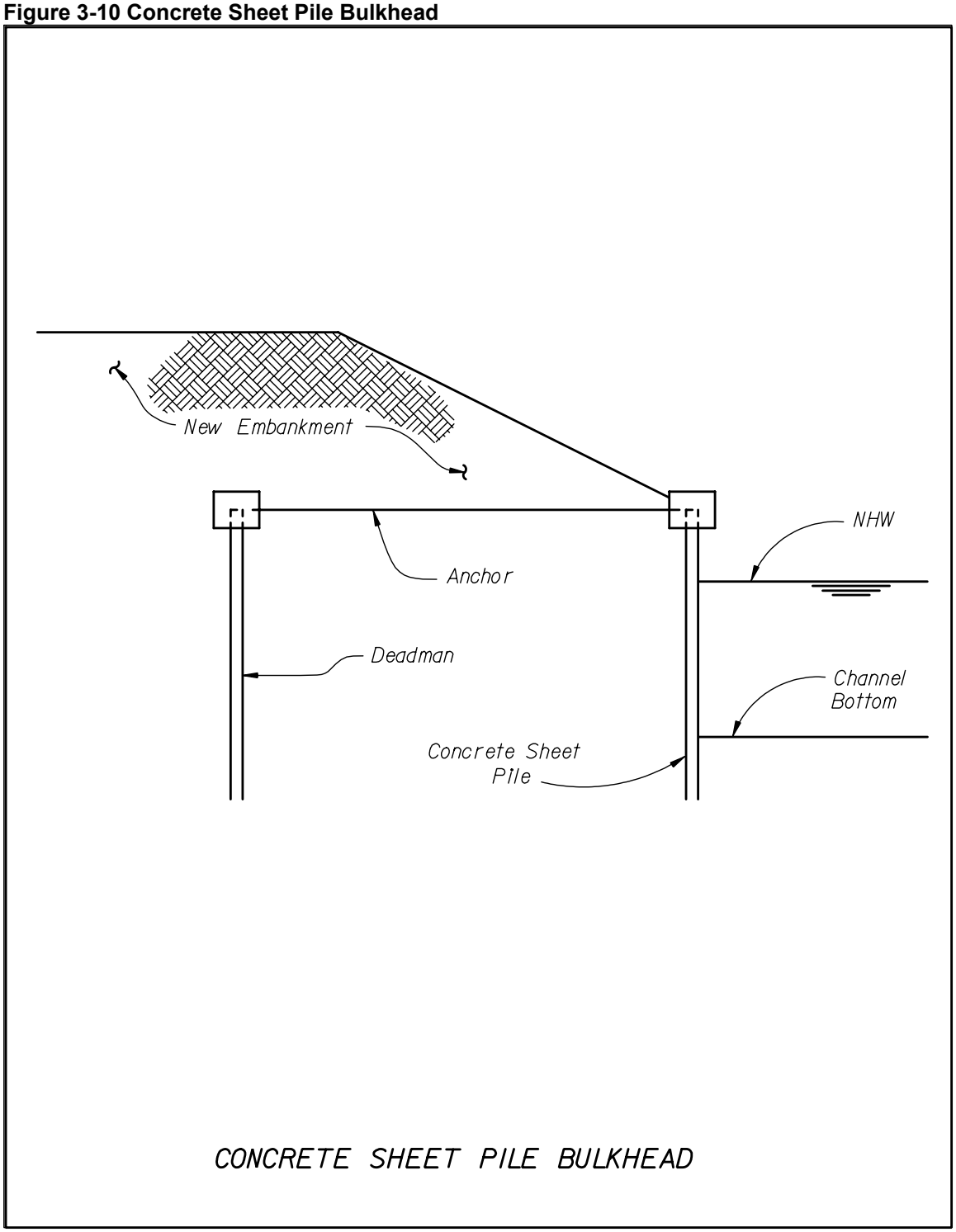

Figure 3-11 Wire Faced - MSE Wall (Temporary)

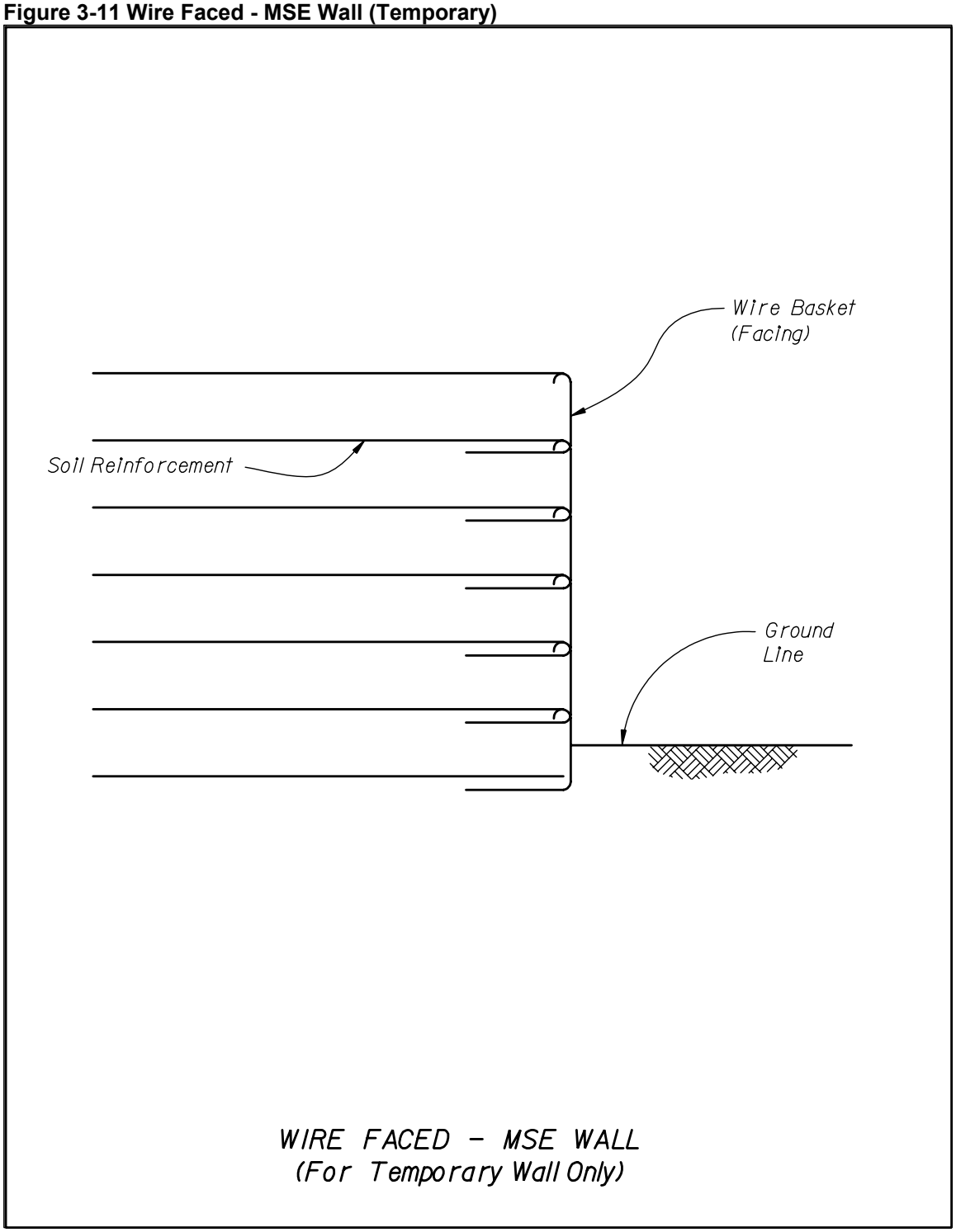

Figure 3-12 Soil Nail Wall

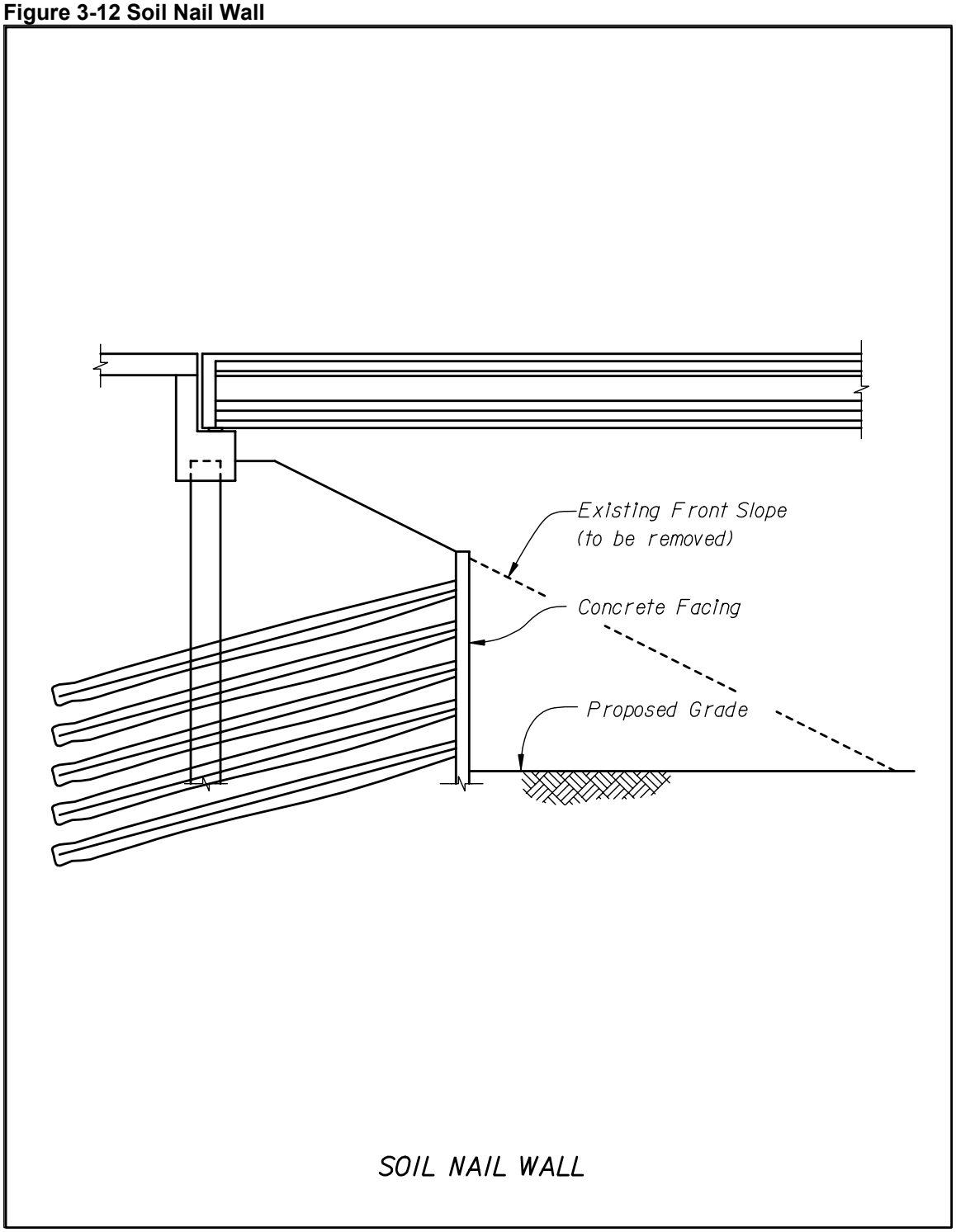

Figure 3-13 Soldier Pile / Panel Wall

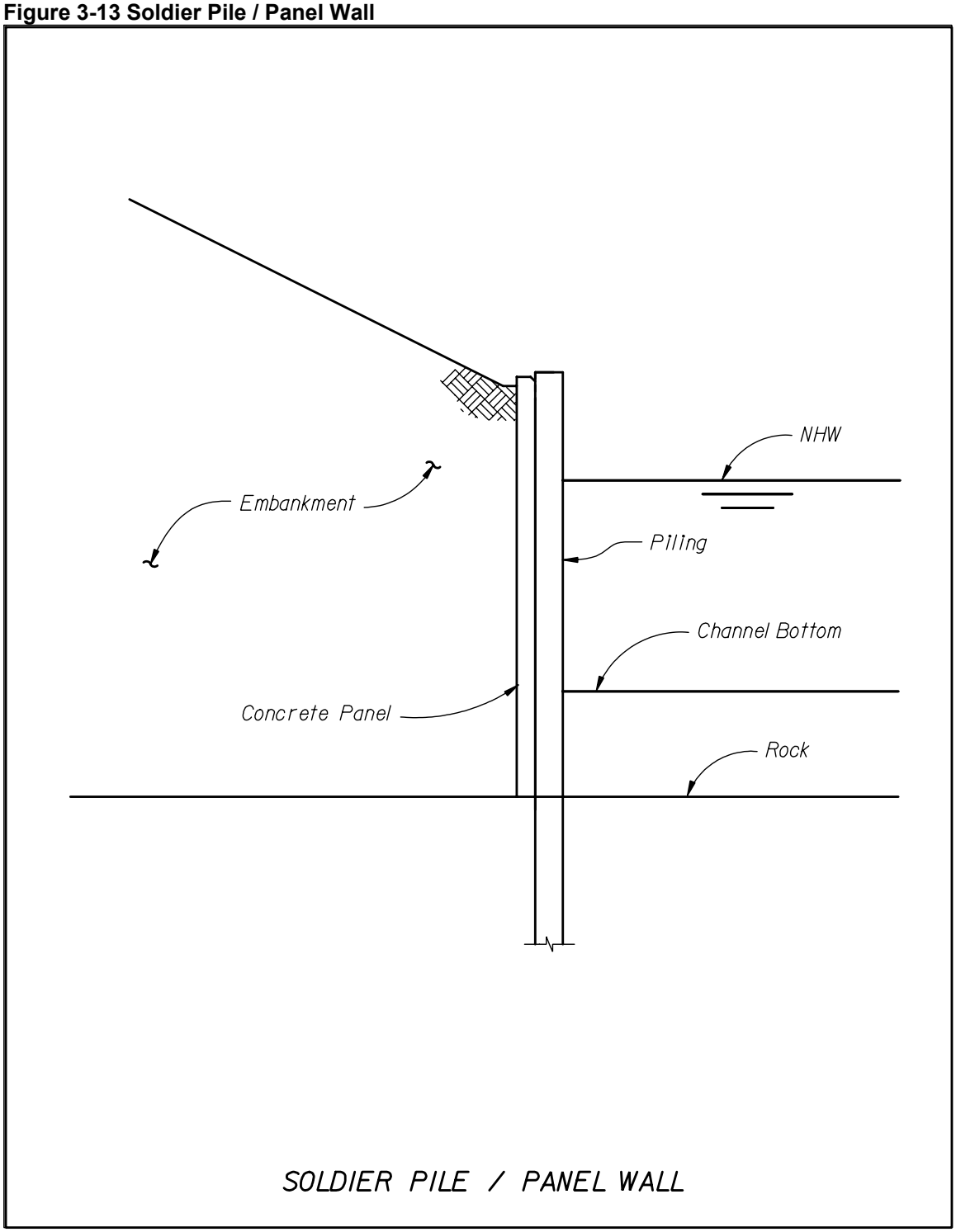

Figure 3-14 Tieback Components (Soldier Beams)

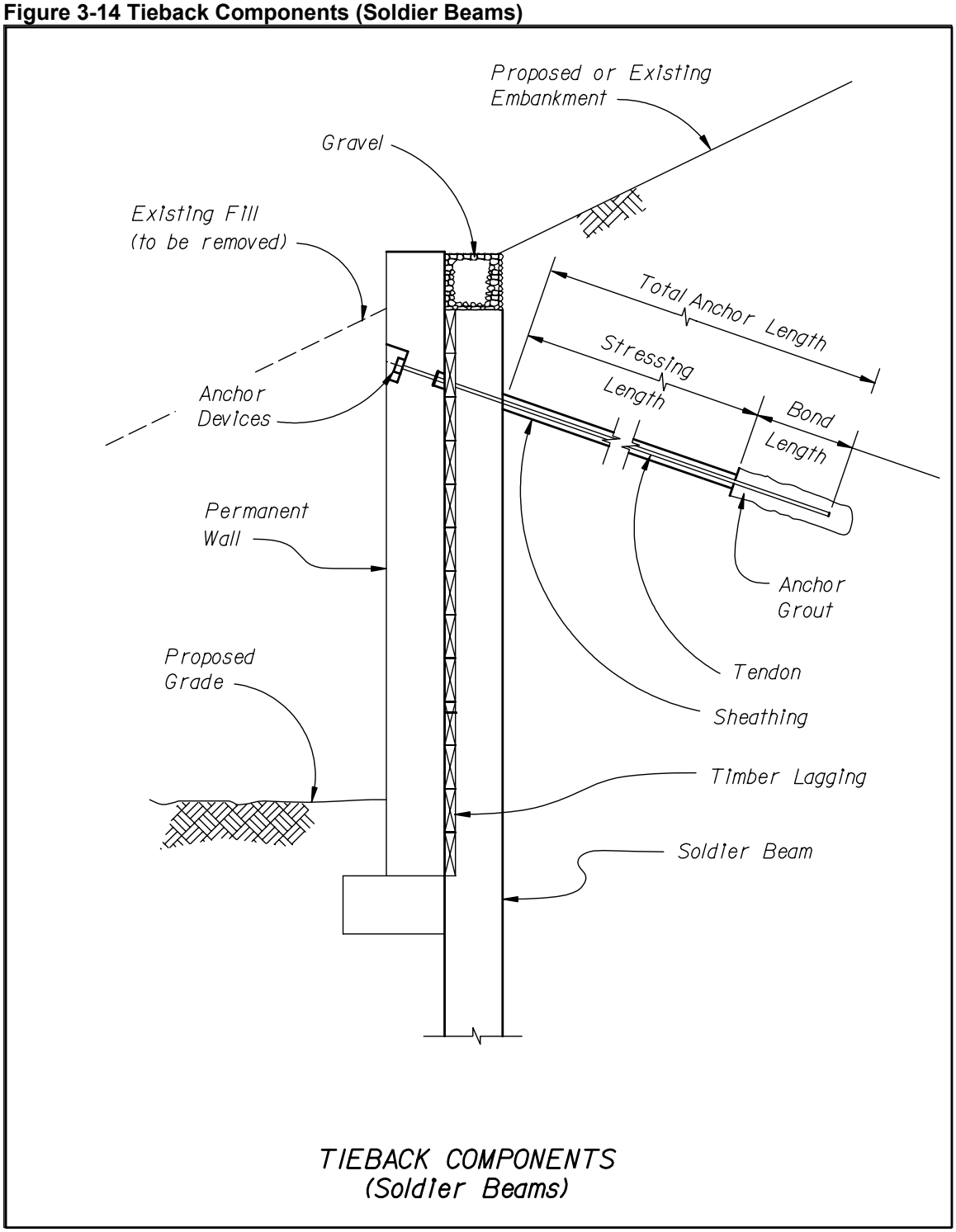

Figure 3-15 Concrete Stem Wall System (Fill Location)

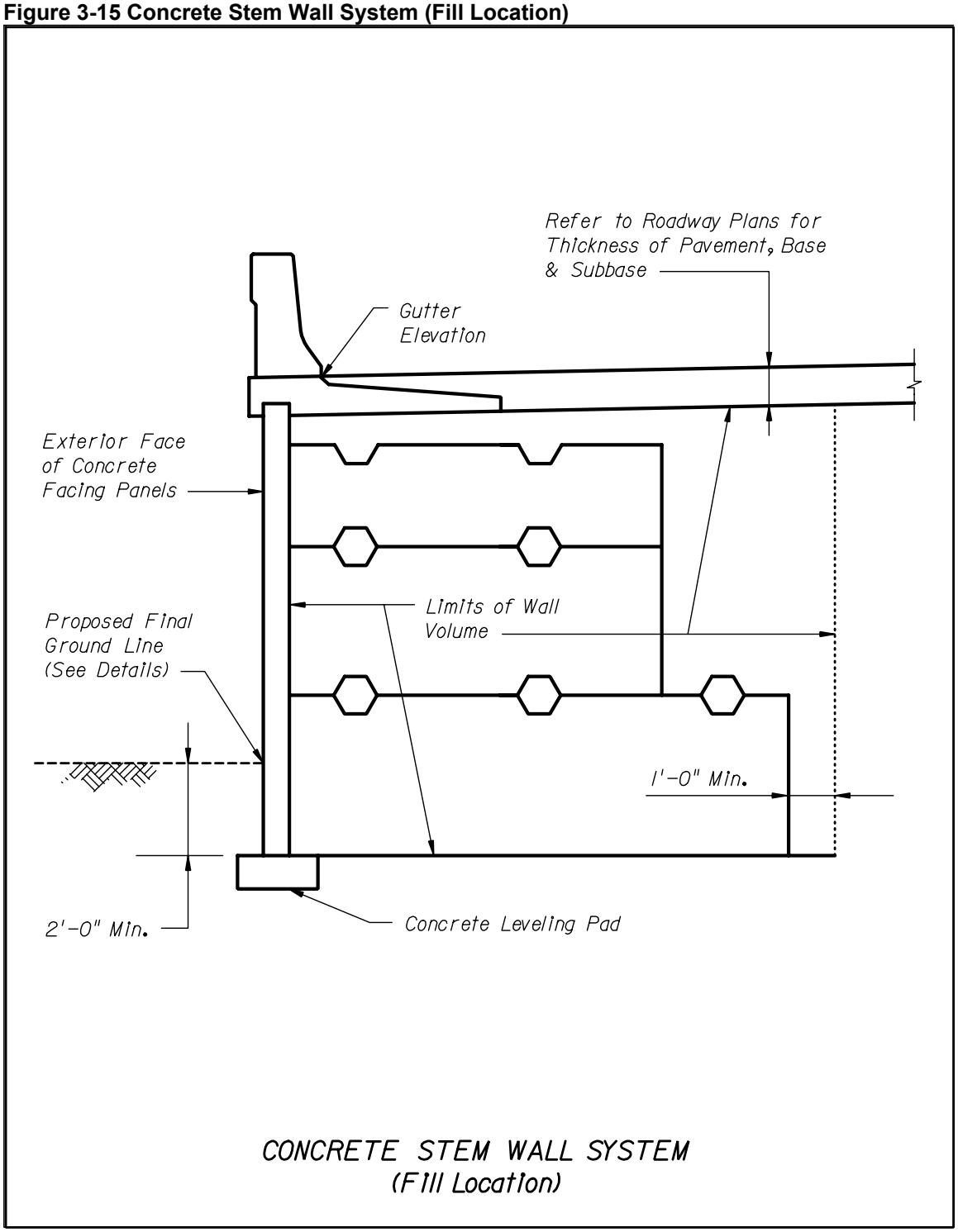

Figure 3-16 Broken Back Backfill with Traffic Surcharge

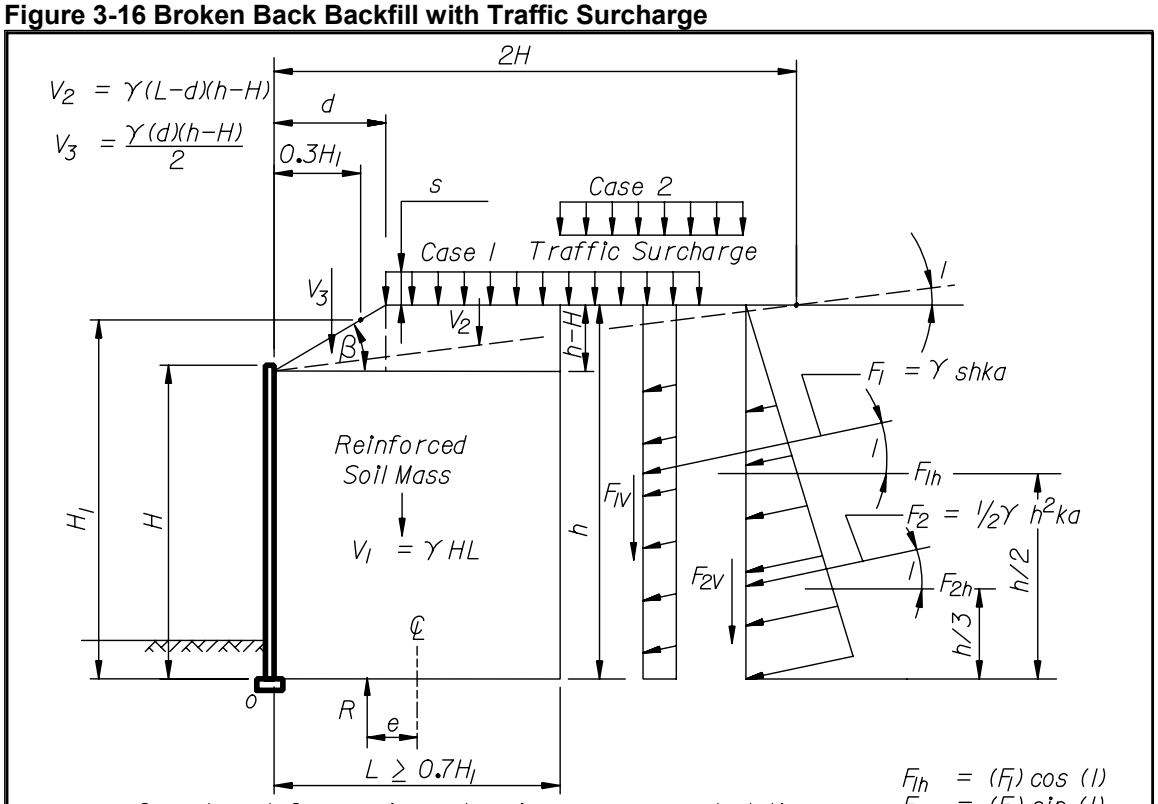

Case 1 used for maximum bearing pressure calculations.
Case 2 used for external stability and bond calculations.

$F_{1h} = (F_1)\cos(I)$
$F_{1V} = (F_1)\sin(I)$
$F_{2h} = (F_2)\cos(I)$
$F_{2V} = (F_2)\sin(I)$

$$H_1 = H + \frac{(\tan\beta)(0.3H)}{(1-0.3\tan\beta)} \quad \text{(Mechanical Height)}$$

K_a For Random Fill: $K_a = \cos(I)\left[\dfrac{\cos(I) - \sqrt{\cos^2(I) - \cos^2\phi}}{\cos(I) + \sqrt{\cos^2(I) - \cos^2\phi}}\right]$

Safety Factor Against Overturning (Moments About Point O):

$$S.F.(O) = \frac{\sum \text{Moments Resisting (Mr)}}{\sum \text{Moments Overturning (Mo)}} = \frac{V_1(L/2) + V_2\left(\frac{L-d}{2} + d\right) + V_3\left(\frac{2d}{3}\right) + F_{1V}(L) + F_{2V}(L)}{F_{1h}(h/2) + F_{2h}(h/3)} \geq 2.0$$

Safety Factor Against Sliding:

$$S.F.(S) = \frac{\sum \text{Horizontal Resisting Force (s)}}{\sum \text{Horizontal Driving Force (s)}} = \frac{(V_1 + V_2 + V_3 + F_{1V} + F_{2V})\tan\phi}{F_{1h} + F_{2h}} \geq 1.5$$

ϕ = Friction Angle of Back fill or Foundation, Whichever is lowest.

$$e = \frac{L}{2} - \frac{Mr - Mo}{R} \leq \frac{L}{6} \qquad \sigma_V = \frac{R}{L-2e}$$

Where: e = Eccentricity R = Resultant of Vertical forces ($V_1 + V_2 + V_3 + F_{1V} + F_{2V}$)

BROKEN BACK BACK FILL CASE WITH TRAFFIC SURCHARGE

Figure 3-17 Broken Back Backfill without Traffic Surcharge

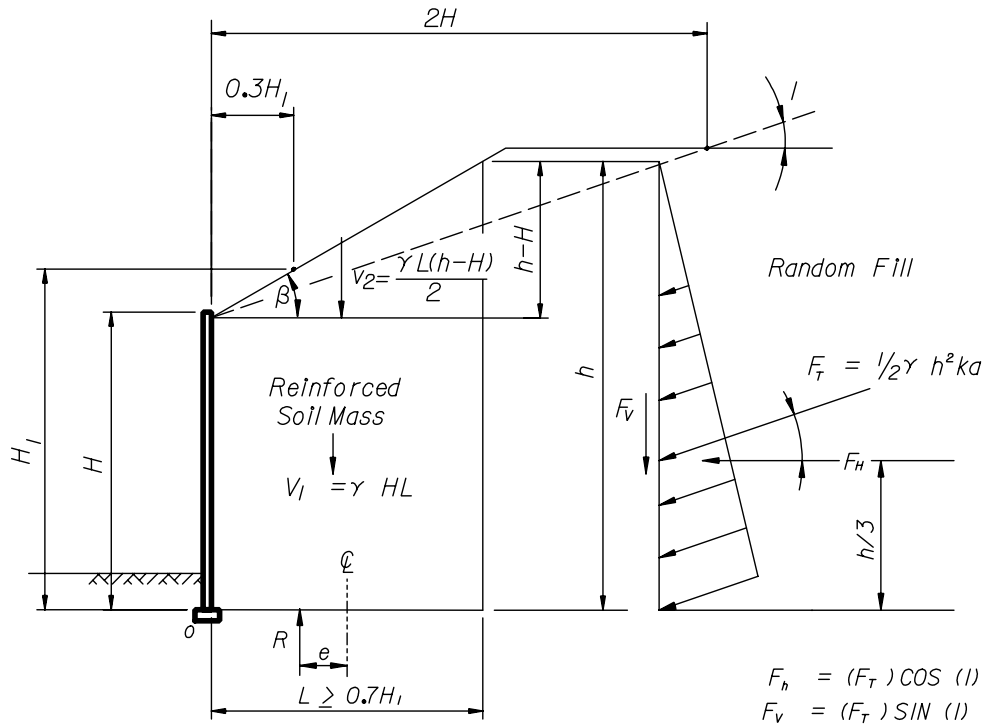

$F_h = (F_T)\cos(I)$

$F_v = (F_T)\sin(I)$

For Infinite Slope $I = \beta$

$$H_1 = H + \frac{(\tan\beta)\,0.3H}{(1-0.3\tan\beta)} \quad \text{(Mechanical Height)}$$

K_a For Random Fill: $K_a = \cos(I)\left[\dfrac{\cos(I) - \sqrt{\cos^2 I - \cos^2\phi}}{\cos(I) + \sqrt{\cos^2 I - \cos^2\phi}}\right]$

SAFETY FACTOR AGAINST OVERTURNING (MOMENTS ABOUT POINT O):

$$S.F.(O) = \frac{\Sigma \text{ Moments Resisting (Mr)}}{\Sigma \text{ Moments Overturning (Mo)}} = \frac{V_1(L/2) + V(2L/3) + F_V(L)}{F_H(h/3)} \geq 2.0$$

SAFETY FACTOR AGAINST SLIDING:

$$S.F.(S) = \frac{\Sigma \text{ Horizontal Resisting Force (s)}}{\Sigma \text{ Horizontal Driving Force (s)}} = \frac{R\tan\phi}{F_H} \geq 1.5$$

ϕ = Friction Angle of Back fill or Foundation, Whichever is lowest.

$$e = \frac{L}{2} - \frac{Mr - Mo}{R} \leq \frac{L}{6} \qquad \sigma v = \frac{R}{L - 2e}$$

Where: e = Eccentricity R = Resultant of Vertical forces $V_1 + V_2 + F_V$

BROKEN BACK BACK FILL CASE WITHOUT TRAFFIC SURCHARGE

Figure 3-18 Design Criteria For Acute Corners

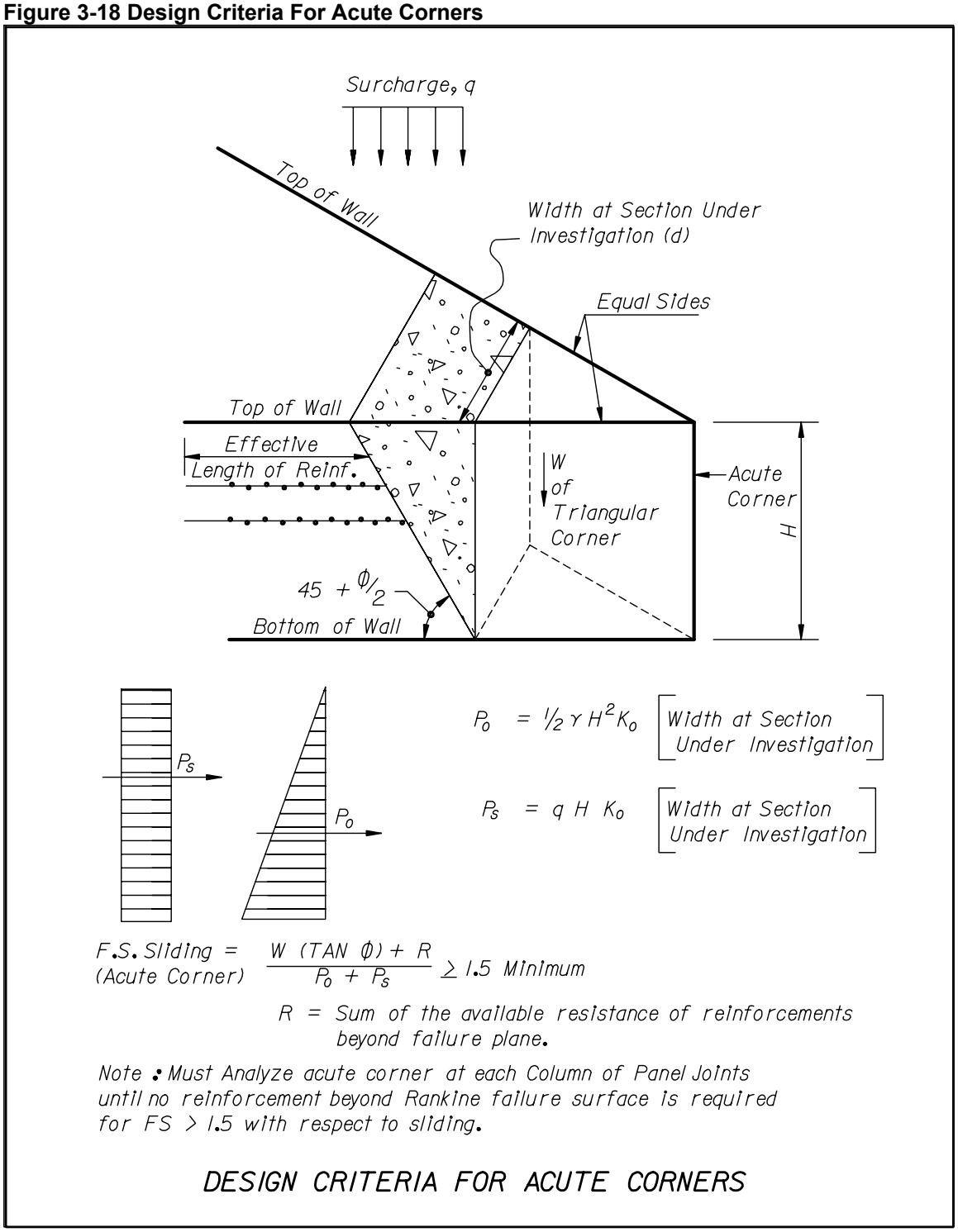

Figure 3-19 Minimum Embedment

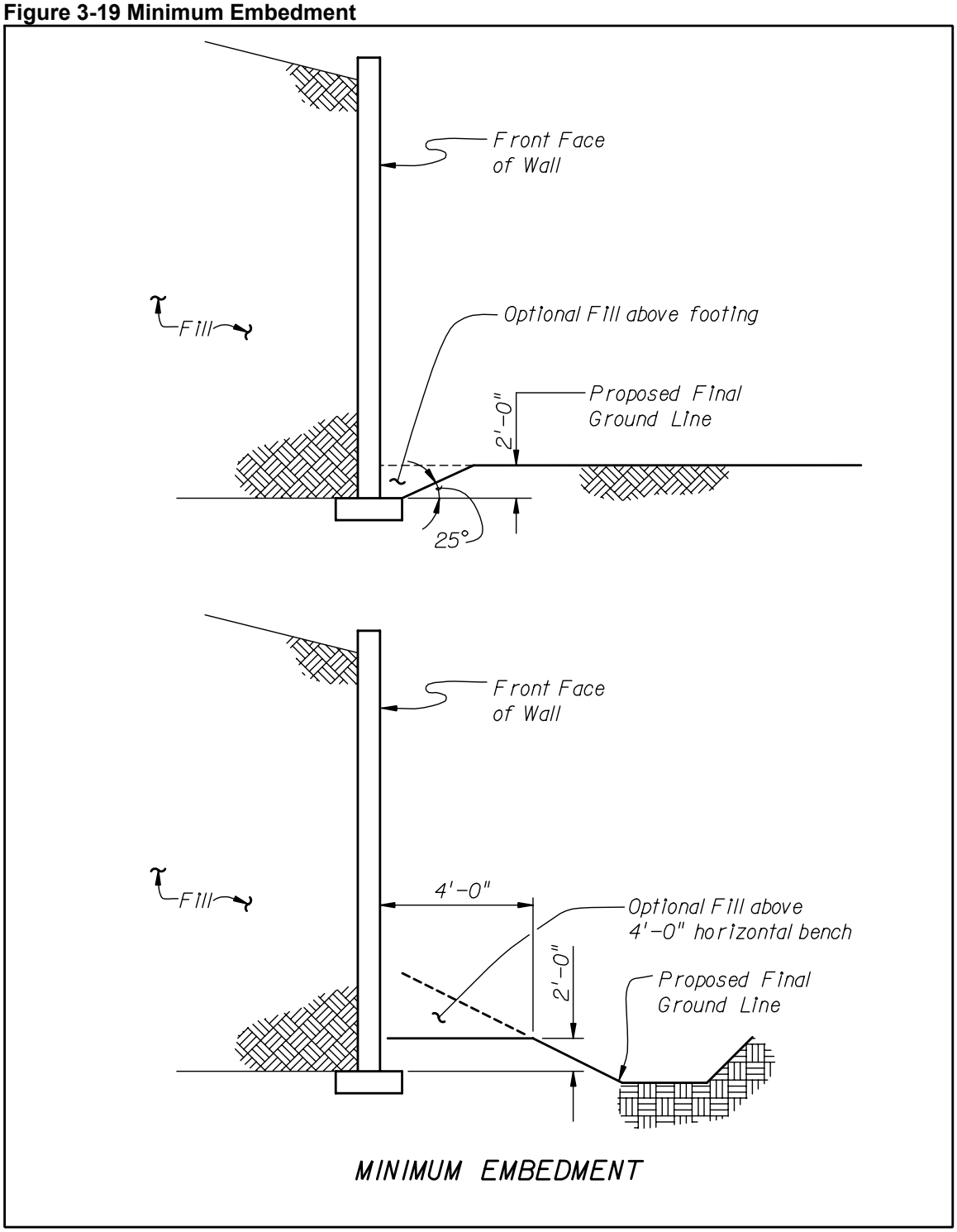

Chapter 4 Superstructure - Concrete

4.1 General

A. This Chapter contains information related to the design, reinforcing, detailing, and construction of concrete components. It also contains deviations from ***LRFD*** that are required in such areas as deck slab reinforcing and construction, pretensioned concrete components, and post-tensioning design and detailing.

B. When using Florida limerock coarse aggregate, use 90% of the value calculated for the Modulus of Elasticity in ***LRFD*** 5.4. For Florida limerock, W_c is typically taken as 0.145 KCF.

4.1.1 Concrete Cover

See Table 1.1 Minimum Concrete Cover in ***SDG*** 1.4 Concrete and Environment.

4.1.2 Reinforcing Steel [5.4.3]

A. Specify ASTM A615, Grade 60 reinforcing steel for concrete design.

B. Do not specify epoxy coated reinforcing steel for any FDOT project.

4.1.3 Girder Transportation

Coordinate the transportation of heavy and/or long girders with the Department's Permit Office during the design phase of the project.

4.2 Concrete Deck Slabs [5.13.1][9.7]

4.2.1 Bridge Length Definitions

For establishing profilograph and deck thickness requirements, bridge structures are defined as Short Bridges or Long Bridges. The determining length is the length of the bridge structure measured along the Profile Grade Line (PGL) of the structure. This includes the lengths of exposed concrete riding surface of the approach slabs. Based upon this established length, the following definitions apply:

A. Short Bridges: Bridge structures less than or equal to 100 feet in PGL length.

B. Long Bridges: Bridge structures more than 100 feet in PGL length.

4.2.2 Deck Thickness Determination

A. For new construction of "Long Bridges" other than inverted T-Beam bridge superstructures, the minimum thickness of bridge decks cast-in-place (CIP) on beams or girders is 8½-inches. The 8½-inch deck thickness includes a one-half inch additional, sacrificial thickness to be included in the dead load of the deck slab but omitted from its section properties.

B. For new construction of "Short Bridges" other than Inverted-T Beam bridge superstructures, the minimum thickness of bridge decks cast-in-place (CIP) on beams or girders is 8-inches minimum.

C. The cast-in-place bridge deck thickness for Inverted-T Beam bridge superstructures with Inverted-T Beams spaced on two foot centers is 6½-inches and 6-inches for bridges meeting the definition of Long and Short Bridges, respectively. The deck thickness beneath traffic railings must be increased to 8 1/2-inches for Long Bridges and 8-inches for Short Bridges. The increased deck thickness must extend to the first interior beam for edge railings, and at least one full bay each side of the traffic railing for interior railings

D. For "Major Widenings," (see criteria in Chapter 7) the thickness of CIP bridge decks on beams or girders is 8-inches. However, whenever a Major Widening is selected by the Department to meet profilograph requirements, a minimum deck thickness of 8½-inches to meet the requirements and design methodology for new construction of the preceding paragraph, must be used.

E. The thickness of CIP bridge decks on beams or girders for minor widenings will be determined on an individual basis but generally will match the thickness of the adjoining existing deck.

F. The thickness of all other CIP or precast concrete bridge decks is based upon the reinforcing cover requirements of ***SDG*** Table 1.2.

G. Establish bearing elevations by deducting the determined thickness before milling, from the Finish Grade Elevations required by the Contract Drawings.

4.2.3 Grooving Bridge Decks

A. For new construction utilizing C-I-P bridge deck (floors) that will not be surfaced with asphaltic concrete, include the following item in the Summary of Pay Items:
Item No. 400-7 - Bridge Floor Grooving Sq. Yards

B. Quantity Determination: Determine the quantity of bridge floor grooving in accordance with the provisions of Article 400-22.3 of the "Specifications."

4.2.4 Deck Slab Design [9.7.2][9.7.3]

A. Empirical Design Method: For Category 1 structures meeting the criteria in ***LRFD [9.7.2.4]*** and are not subject to either staged construction or future widening, design deck slabs by the Empirical Design method of ***LRFD [9.7.2]*** . In lieu of the reinforcing requirements of ***LRFD [9.7.2.5]***, use no. 5 bars at 12-inch centers in both directions in both the top and bottom layers. Place two additional No. 5 bars between the primary transverse top slab bars (4-inch nominal spacing) in the slab overhangs to meet the TL-4 loading requirements for the FDOT standard barriers. Extend one of the additional bars to the mid-point between the exterior beam and the first interior beam; extend the second additional bar 36-inches beyond this mid-point. The maximum deck overhang is 6 feet, measured from the centerline of the exterior beam.

B. Traditional Design Method: For all Category 2 Structures and for Category 1 Structures that do not meet the requirements of ***LRFD*** [9.7.2.4] and are subject to either staged construction or future widening, design deck slabs in accordance with the Traditional Design method of ***LRFD*** [9.7.3]. For the deck overhang design and median barriers, the following minimum transverse top slab reinforcing (A_s)may be provided (without further analysis) where the indicated minimum slab depths are provided and the total deck overhang is 6 feet or less. However, for 8-inch thick decks with eight-foot sound wall traffic railings the deck overhang is limited to 18-inches beyond the outer edge of the top flange of the exterior beam. The extra slab depth for deck grinding is not included.

Traffic Railing Barrier (Test Level)	**Slab Depth**	**A_s/ft (sq in)**
32-inch F-Shape (TL-4)	8-inches	0.80
32-inch Vertical Face (TL-4)	8-inches	0.80
32-inch F-Shape Median (TL-4)	8-inches	0.40 **
8'-0" Sound Barrier (TL-4)	8-inches	0.93***
8'-0" Sound Barrier (TL-4)	10-inches	0.66***
42-inch F-Shape (TL-5)	10-inches	0.75
42-inch Vertical Face (TL-5)	8-inches (with 6-inch sidewalk)	0.40*(0.40)

* Minimum reinforcing based on the 42-inch vertical face traffic railing mounted on a 6-inch thick sidewalk above an 8-inch deck with 2-inch cover to the top reinforcing in both the deck and sidewalk. Specify No. 4 Bars at 6-inch spacing placed transversely in the top of the raised sidewalk.

** Minimum reinforcing required in both top and bottom of slab. Less reinforcing may be provided in the bottom, provided the sum of the top and bottom reinforcing is not less than 0.80 square inch per foot.

*** For the eight foot sound wall, the area of top slab reinforcing 6 feet each side of deck expansion joints must be increased by 30% to provide a minimum 1.21 square inches per foot for an 8-inch thick slab and 0.86 square inches per foot for a 10-inch thick slab. Evaluate the development length of this additional reinforcing and detail hooked ends for all bars when necessary.

For traffic railings located inside the exterior beam (other than median barriers), the minimum transverse reinforcing in the top of the slab may be reduced by 40% provided the bottom reinforcing is not less than the top reinforcing.

If the above reinforcing is less than or equal to twice the nominal slab reinforcing, the extra reinforcing must be cut-off 12-inches beyond the midpoint between the two exterior beams. If the above reinforcing is greater than twice the nominal slab reinforcing, then half of the extra reinforcing or up to 1/3 the total reinforcing must be cut-off midway between the two exterior beams. The remaining extra reinforcing must be cut-off at 3/4 of the two exterior beam spacing, but not closer than 2 feet from the first cut-off beyond the outer edge of the top flange of the exterior beam.

4.2.5 Traffic Railing Design Requirements

A. In lieu of the Traditional Design Method shown above, the following design values may be used to design the top transverse slab reinforcing, for the types listed:

Traffic Railing Type (Test Level)	M_c	T_u	L_d
32-inch F-Shape (TL-4)	15.7	7.1	7.67
32-inch Vertical Face (TL-4)	16.9	7.1	7.67
32-inch Median (TL-4)	15.3	3.5	7.67
8-foot Sound Barrier (TL-4)	20.1 ***	***5.9	21.00
42-inch F-Shape (TL-5)	20.6	9.0	13.75
42-inch Vertical Face (TL-5)	25.8	10.6	12.50

*** For the 8-foot sound wall, increase the ultimate slab moment and tensile force by 30% for a distance of 6 feet each side of all deck expansion joints, except on approach slabs.

Where:

M_c = Ultimate slab moment at the traffic railing face (gutter line) from traffic railing impact (kip-ft/ft).

T_u = Ultimate tensile force to be resisted (kips/ft.)

L_d = Distribution length (ft.) along the base of the traffic railing at the gutter line near a traffic railing open joint (**L_c** + traffic railing height).

The following relationship must be satisfied:

$$(T_u / \Phi P_n) + (M_u / \Phi M_n) \leq 1.0$$

for which:

$$P_n = A_s f_y$$

Where:

Ø = 1.0

P_n = Nominal tensile capacity of the deck (kips/ft.).

A_s = Area of transverse reinforcing steel in the top of the deck (sq. in.)

f_y = The reinforcing steel yield strength (ksi).

M_u = Total ultimate deck moment from traffic railing impact and factored dead load at the gutter line **(M_c + 1.25*$M_{Dead\ Load}$)** (kips-ft/ft).

M_n - Nominal moment capacity at the gutter line determined by traditional rational methods for reinforced concrete (kips-ft/ft).

B. For locations inside the gutter line, these forces may be distributed over a longer length of **L_d + 2D(tan 45º)** feet. Where "D" equals the distance from the gutter line to the critical slab section. At open transverse deck joints, use half of the increased distribution length **D(tan 45º)**.

C. For flat slab bridges the transverse moment due to the traffic railing dead load may be neglected. The area of transverse top slab reinforcing determined by analysis, for flat slab bridges with edge traffic railings must not be less than 0.30 sq in/ft within 4 feet of the gutter line for any TL-4 traffic railing or 0.40 sq in/ft within 10 feet of the gutter line for any TL-5 railing.

D. When more than 50% of the total transverse reinforcing must be cut off, a minimum of 2 feet must separate the cut-off locations.

E. For traffic railings located inside the exterior beam, or greater than 5 feet from the edge of flat bridges, the designer may assume that only 60% of the ultimate slab moment and tensile force are transferred to the deck slab on either side of the traffic railing.

4.2.6 Reinforcing Steel over Intermediate Piers or Bents

A. When CIP slabs are made composite with simple span concrete beams, and are cast continuous over intermediate piers or bents, design supplemental longitudinal reinforcing in the tops of slabs.

B. Size, space, and place reinforcing in accordance with the following criteria:
1.) No. 5 Bars placed between the continuous, longitudinal reinforcing bars.
2.) A minimum of 35 feet in length or 2/3 of the average span length whichever is less.
3.) Placed symmetrically about the centerline of the pier or bent, with alternating bars staggered 5 feet.

4.2.7 Minimum Negative Flexure Slab Reinforcement [6.10.3.7]

Any location where the top of the slab is in tension under any combination of dead load and live load is considered a negative flexural region.
Commentary: See Chapter 7 for additional slab reinforcing requirements.

4.2.8 Crack Control in Continuous Superstructures [5.10.8]

A. To minimize shrinkage cracking, develop a designated casting sequence for continuous beam or girder superstructures. The sequence should result in construction joints spaced at not more than 80 feet.

B. Develop camber diagrams taking into consideration the casting sequence and the impact on the changing cross section characteristics of the superstructure.

C. State on the plans that a minimum of 72 hours is required between adjacent pours and that the casting sequence may not be changed unless the Contractor's Specialty Engineer performs a new structural analysis, and new camber diagrams are calculated.

4.2.9 Structures Continuous for Live Load

In structures designed continuous for live load, design supplemental longitudinal reinforcing extended beyond the point where the slab is in tension under any load combination.

4.2.10 Concrete Decks on Continuous Steel Girders

For longitudinal reinforcing steel within the negative moment regions of continuous, composite steel girder superstructures, comply with the requirements of ***LRFD* [6.10.3.7]**. In addition, design the remainder of the deck with No. 5 longitudinal steel at 12-inch spacing in the top of the slab and No. 4 Bars at 12-inch spacing in the bottom of the slab.

4.2.11 Skewed Decks [9.7.1.3]

A. Reinforcing Placement when the Slab Skew is 15 Degrees or less:
Place the transverse reinforcement parallel to the skew for the entire length of the slab.

B. Reinforcing Placement when the Slab Skew is more than 15 Degrees:
Place the required transverse reinforcement perpendicular to the centerline of span. Since the typical required transverse reinforcement cannot be placed full-width in the triangular shaped portions of the ends of the slab, the required amount of longitudinal reinforcing must be doubled for a distance along the span equal to the beam spacing. In addition, three No. 5 Bars at 6” spacing, full-width, (both top and bottom mats) must be placed parallel to the end skew in the top of each end of the slab.

C. Regardless of the angle of skew, the traffic railing reinforcement cast into the slab need not be skewed.

4.2.12 Temperature and Shrinkage Reinforcement

For all cast in place decks, design temperature and shrinkage reinforcement per ***LRFD* [5.10.8]** except do not exceed 12-inch spacing and the minimum bar size is No 4.

4.2.13 Stay-in-Place Forms

A. Clearly state in the “General Notes” for each bridge project, whether or not stay-in-place forms are permitted for the project and how the design was modified for their use; e.g., dead load allowance.

B. Design and detail stay-in-place, metal forms for beam and girder superstructures.

C. Do not use metal stay-in-place forms in moderately aggressive or extremely aggressive environments. Metal stay-in-place forms may be used for the internal portions of box girders (closed portions between webs) in any environment.

D. Precast, reinforced concrete, stay-in-place forms may be used for all environmental classifications; however, the bridge plans must be specifically designed, detailed and prepared for their use.

E. Composite stay-in-place forms are not permitted.

4.3 Pretensioned Beams

4.3.1 General

A. The use of ASTM A416, Grade 270, low-relaxation, straight, prestressing strands is preferred for the design of prestressed beams. However, the following requirements apply to simply supported, fully pretensioned beams, whether of straight or depressed (draped) strand profile, except where specifically noted otherwise.

B. Bridges with varying span lengths, skew angles, beam spacing, beam loads, or other design criteria may result in very similar individual designs. Consider the individual beams designs as a first trial subject to modifications by combining similar designs into groups of common materials and stranding based upon the following priorities:
1.) 28-Day Compressive Concrete Strength (**f'_c**)
2.) Stranding (size, number, and location)

3.) Compressive Concrete Strength at Release (**f'_{ci}**)
4.) Shielding (Debonding.) Full length shielding of strands in some beams to facilitate casting bed utilization of beams with slightly different strand patterns is prohibited.

Commentary: Grouping beam designs in accordance with the priority list maximizes casting bed usage and minimizes variations in materials and stranding.

C. In analyzing stresses and/or determining the required length of debonding, stresses must be limited to the following values:
1.) Tension (psi) at top of beam at release (straight strand only):
Outer 15 percent of design span: $12\sqrt{f'_{ci}}$
Center 70 percent of design span: $6\sqrt{f'_{ci}}$
2.) Tension at top of beam at release (depressed strands only): $6\sqrt{f'_{ci}}$

D. In order to achieve uniformity and consistency in designing strand patterns, the following parameters apply:
1.) Strand patterns utilizing an odd number of strands per row (a strand located on the centerline of beam) and a minimum side cover (centerline of strand to face of concrete) of 3-inches are required for all AASHTO and Florida Bulb-Tee beam sections except AASHTO Type V and VI beams for which a strand pattern with an even number of strands per row must be utilized.
2.) Use "L-shaped" longitudinal bars in the webs and flanges in end zone areas.
3.) The minimum compressive concrete strength at release will be the greater of 4.0 ksi or 0.6 **f'_c**. Higher release strengths may be used on a case by case basis but must not exceed the lesser of 0.8 **f'_c** or 6.0 ksi.
4.) Design and specify prestressed beams to conform to classes and related strengths of concrete as shown in Table 4.1.
5.) The use of time-dependent, inelastic creep and shrinkage is not allowed in the design of simple span, pretensioned components either during design or construction. Prestress loss must be calculated in accordance with ***LRFD*** [5.9.5].

Commentary: The FDOT cannot practically control, nor require the Contractor to control, the construction sequence and materials for simple span precast, prestressed beams. To benefit from the use of refined time-dependent analysis, literally every prestressed beam design would have to be re-analyzed using the proper construction times, temperature, humidity, material properties, etc. of both the beam and the yet-to-be-cast composite slab.

6.) Stress and camber calculations for the design of simple span, pretensioned components must be based upon the use of transformed section properties.
7.) When wide-top beams such as bulb-tees and AASHTO Types V and VI beams are used in conjunction with stay-in-place metal forms, evaluate the edges of flanges of those beams to safely and adequately support the self-weight of the forms, concrete, and construction load specified in Section 400 of the ***FDOT Standard Specifications for Road and Bridge Construction***.
8.) The design thickness of the composite slab must be provided from the top of the stay-in-place metal form to the finished slab surface, and the superstructure concrete quantity will not include the concrete required to fill the form flutes.

Table 4.1 Concrete Classes and Strengths

Class of Concrete	28-Day Compressive Strength (f'c) KSI
Class III*	5.0
Class IV	5.5
Class V (special)	6.0
Class V	6.5
Class VI	8.5

*Class III concrete may be used only when the superstructure environment is classified as Slightly Aggressive in accordance with the criteria in Chapter 2.

E. The maximum prestressing force from fully bonded strands at the ends of prestressed beams must be limited to the values shown on the Standard Drawings. Do not apply losses to the calculated prestressing force. The minimum length of debonding from the ends of the beams is half the depth of the beam. Do not modify the reinforcing in the ends of the beams shown in the Standard Drawings without the approval of the State Structures Design Engineer.

*Commentary: To minimize horizontal and diagonal web cracks and accommodate the longer bursting force distribution length (h/4) adopted by **LRFD** in 2002, the maximum bonded prestressing force in the ends of prestressed beams has been limited. The maximum prestressing force is based on 13 ksi bursting steel stress for AASHTO and Florida Bulb-Tee beams, 18 ksi bursting steel stress for Florida U-Beams, and 20 ksi bursting steel stress for inverted-T beams.*

4.3.2 Beam Camber/Build-Up over Beams

A. Unless otherwise required as a design parameter, beam camber for computing the build-up shown on the plans must be based on 120-day old beam concrete.

B. On the build-up detail, show the age of beam concrete used for camber calculations as well as the value of camber due to prestressing minus the dead load deflection of the beam.

Commentary: In the past, the FDOT has experienced significant slab construction problems associated with excessive prestressed, pretensioned beam camber. The use of straight strand beam designs, higher strength materials permitting longer spans, stage construction, long storage periods, improperly placed dunnage, and construction delays are some of the factors that have contributed to camber growth. Actual camber at the time of casting the slab equal to 2 to 3 times the initial camber at release is not uncommon.

4.3.3 Florida Bulb-Tee Beams [5.14.1.2.2]

The minimum web thicknesses for Florida Bulb-Tee beams are:

Pretensioned Beams	6½-inches
Post-Tensioned Beams	See Table 4.5

4.4 Precast, Prestressed Slab Units [5.14.4.3]

A. To control the maximum camber expected in the field for precast prestressed slab units built without a topping, the design camber must not exceed ¼-inch. For precast prestressed slab units built with a topping, the design camber must not exceed 1-inch.

B. Unless otherwise specified on the plans, the design camber must be computed for 120-day-old slab concrete. The design camber shown on the plans is the value of camber due to prestressing minus the dead load deflection of the slab unit after all prestress losses.

C. In order to accommodate the enhanced post-tensioning system requirement of three levels of protection for strand, transverse post-tensioned pre-stressed slab units must incorporate a double duct system. The outer duct must be cast into the slab and sized to accommodate a differential camber of 1-inch. The inner duct must be continuous across all joints and sized based upon the number of strands or the diameter of the bar coupler. Specify that both the inner duct and the annulus between the ducts be grouted.

4.5 Post-Tensioning, General [5.14.2]

This section applies to both concrete boxes and post-tensioned I-girders unless otherwise noted.

4.5.1 Integrated Drawings

A. Show congested areas of post-tensioned concrete structures on integrated drawings with an assumed post-tensioning system. Such areas include anchorage zones, areas containing embedded items for the assumed post-tensioning system, areas where post-tensioning ducts deviate both in the vertical and transverse directions, and other highly congested areas as determined by the Engineer and/or the Department.

B. For curved structures, evaluate and accommodate possible conflicts between webs and external tendons. Check for conflicts between future post-tensioning tendons and permanent tendons.

C. Select the assumed post-tensioning system, embedded items, etc. in a manner that will accommodate competitive systems using standard anchorage sizes of 4-0.6" dia, 7-0.6" dia, 12-0.6" dia, 19-0.6 dia and 27-0.6" dia. Integrated drawings utilizing the assumed system must be detailed to a scale and quality required to show double-line reinforcing and post-tensioning steel in two-dimension (2-D) and, when necessary, in complete three-dimension (3-D) drawings and details.

4.5.2 Prestress

A. Secondary Effects:
   1.) Prestress forces in continuous structures that can result in substantial secondary effects.
   2.) In curved structures, draped web tendons will produce transverse bending stresses in the box cross-section due to the lateral component of forces arising from plan curvature.

B. Tendon Geometry: When coordinating design calculations with detail drawings, account for the fact that the center of gravity of the duct and the center of gravity of the prestressing steel are not necessarily coincidental.

C. Required Prestress: On the drawings, show prestress force values for tendon ends at anchorages.

D. Internal/External Tendons: External tendons must remain external to the section without entering the top or bottom slab.

E. Strand Couplers: Strand couplers as described in ***LRFD*** [5.4.5] are not allowed.

4.5.3 Material

A. Concrete (minimum 28-day cylinder strengths):

1.) Precast superstructure (including CIP joints):	5.5 ksi
2.) Precast pier stems:	5.5 ksi
3.) Post-tensioned I-girders:	5.5 ksi

B. Post-Tensioning Steel:

1.) Strand:	ASTM A416, Grade 270, low relaxation.
2.) Parallel wires:	ASTM A421, Grade 240.
3.) Bars:	ASTM A722, Grade 150.

C. Post-Tensioning Anchor set (to be verified during construction):

1.) Strand:	½-inch
2.) Parallel wires:	½-inch
3.) Bars:	0

4.5.4 Expansion Joints

A. Design: Design expansion joints for the full range of movement anticipated due to creep, shrinkage, elastic shortening, and temperature effects and the requirements of Chapter 6. Do not design superstructures utilizing expansion joints within the span (i.e. ¼ point hinges).

B. Settings: The setting of expansion joint recesses and expansion joint devices, including any precompression, must be clearly stated on the drawings. Expansion joints must be sized and set at time of construction for the following conditions:
   1.) Allowance for opening movements based on the total anticipated movement resulting from the combined effects of creep, shrinkage, and temperature rise and fall. For box girder structures, compute creep and shrinkage from the time the expansion joints are installed through day 4,000. Base temperature rise and fall on 120% of the maximum value given in Table 6.2. Place a note on the plans stating that all expansion joints be installed after superstructure segment erection and deck profiling is completed for the entire bridge.

2.) To account for the larger amount of opening movement, expansion devices should be set precompressed to the maximum extent possible. In calculations, allow for an assumed setting temperature of 85 degrees F. Provide a table on the plans giving precompression settings according to the prevailing conditions. Size expansion devices and set to remain in compression through the full range of design temperature from their initial installation until a time of 4,000 days.

3.) Provide a table of setting adjustments to account for temperature variation at installation. Indicate the ambient air temperature at time of installation, and note that adjustments must be calculated for the difference between the ambient air temperature and the mean temperature given in ***SDG*** Table 6.2.

C. Armoring: Design and detail concrete corners under expansion joint devices with adequate steel armoring to prevent spalling or other damage under traffic. The armor should be minimum 4-inch x 4-inch x 5/8-inch galvanized angles anchored to the concrete with welded studs or similar devices. Specify that horizontal concrete surfaces supporting the expansion joint device and running flush with the armoring have a finish acceptable for the device. Detail armor with adequate vent holes to assure proper filling and compaction of the concrete under the armor.

4.5.5 Ducts and Tendons

A. Specify tendon duct radius and dimensions to duct PC and PT points on the design plans. Show offset dimensions to post-tensioning duct trajectories from fixed surfaces or clearly defined reference lines at intervals not exceeding 5 feet. When the radius of curvature of a duct exceeds one-half degree per foot, show offsets at intervals not exceeding 30-inches. In regions of tight reverse curvature of short tendon sections, show offsets at sufficiently frequent intervals to clearly define the reverse curve.

B. Curved ducts that run parallel to each other or around a void or re-entrant corner must be sufficiently encased in concrete and reinforced as necessary to avoid radial failure (pull-out into another duct or void). In the case of approximately parallel ducts, consider the arrangement, installation, stressing sequence, and grouting in order to avoid potential problems with cross grouting of ducts

C. Detail post-tensioned precast I-girders to utilize round ducts only.

Table 4.2 Minimum Center-to-Center Duct Spacing

Post Tensioned Bridge Type	*Minimum Center To Center Longitudinal Duct Spacing
Precast Segmental Balanced Cantilever Cast-In-Place Balanced Cantilever	8-inches, 2 times outer duct diameter, or outer duct diameter plus 4½-inches whichever is greater.
Spliced I-Girder Bridges	4-inches, outer duct diameter plus 1.5 times maximum aggregate size, or outer duct diameter plus 2-inches whichever is greater.
C.I.P. Voided Slab Bridges C.I.P. Multi-Cell Bridges	When all ducts are in a vertical plane, 4-inches, outer duct diameter plus 1.5 times maximum aggregate size, or outer duct diameter plus 2-inches whichever is greater. **For two or more ducts set side-by-side, outer duct diameter plus 3-inches.

* - Bundled tendons are not allowed.
** - The 3-inch measurement must be measured in a horizontal plane.

D. Size ducts for all post-tensioning bars ½-inch larger than the diameter of the bar coupler.

E. Internal post-tensioning ducts must be positively sealed with duct couplers at all segment joints to eliminate the possibility of cross contamination. Design and detail internal tendons to be perpendicular to all segment joints. Require minimum 18-inch closure pours.

F. To allow room for the installation of duct couplers, detail all external tendons to provide a 1½-inch clearance between the duct surface and the face of the concrete.

G. Where external tendons pass through deviation saddles, design the tendons to be contained in grouted steel pipes, cast into the deviation saddle concrete.

H. Strand anchorages cast into concrete structures are not allowed.

I. Use steel pipe ducts for tendons whose anchorages are embedded in the diaphragms. Design and detail shear connectors on these steel pipe ducts to transfer the tendon ultimate capacity to the surrounding concrete.

Table 4.3 Minimum Tendon Radius

Tendon Size	Minimum Radius
19-0.5” dia, 12-0.6” dia	8 feet
31-0.5” dia, 19-0.6” dia	10 feet
55-0.5” dia, 37-0.6” dia	13 feet

J. All balanced cantilever bridges must utilize a minimum of four positive moment external draped continuity tendons (two per web) that extend to adjacent pier diaphragms.

Table 4.4 Min. Tendons Required for Critical Post-tensioned Sections

Post Tensioned Bridge Element	Minimum Number of Tendons
Mid Span Closure Pour C.I.P. and Precast Balanced Cantilever Bridges	Bottom slab – two per web Top slab – One per web (4- 0.6-inch dia. min.)
Span by Span Segmental Bridges	Four tendons per web
C.I.P. Multi-Cell Bridges	Three tendons per web
Spliced I-Girder Bridges*	Three tendons per girder
Unit End Spans C.I.P. and Precast Balanced Cantilever Bridges	Three tendons per web
Diaphragms - Vertically Post-Tensioned	Six; if strength is provided by P.T. only Four; if strength is provided by combination of P.T. and mild reinforcing
Diaphragms - Vertically Post-Tensioned	Four Bars**
Segment - Vertically Post-Tensioned	Two Bars per web
* 3 girders minimum per bridge. ** 2 per additional cell	

4.5.6 Minimum Dimensions

Table 4.5 Dimensions for sections containing post-tensioning tendons	
Post Tensioned Bridge Element	**Minimum Thickness**
Webs; I-Girder Bridges	8-inches or outer duct plus 5-inches whichever is greater.
Regions of Slabs without longitudinal tendons	8-inches, or as required to accommodate grinding, concrete covers, transverse and longitudinal P.T. ducts and top and bottom mild reinforcing mats, with allowance for construction tolerances whichever is greater.
Regions of slabs containing longitudinal internal tendons	9-inches, or as required to accommodate grinding, concrete covers, transverse and longitudinal P.T. ducts and top and bottom mild reinforcing mats, with allowance for construction tolerances whichever is greater.
Clear Distance Between Circular Voids - C.I.P. Voided Slab Bridges	Outer duct diameter plus 5-inches, or outer duct diameter plus vertical reinforcing plus concrete cover whichever is greater.
Segment Pier Diaphragms containing external post-tensioning	*6 feet.
Webs of C.I.P. boxes with internal tendons	For single column of ducts: 12-inches, or 3 times outer duct diameter whichever is greater. **For two or more ducts set side by side: Web thickness must be sufficient to accommodate concrete covers, longitudinal P.T. ducts, 3 -inch min. spacing between ducts, vertical reinforcing, with allowance for construction tolerances.
*Post-Tensioned pier segment halves are acceptable. ** The 3 -inch measurement must be measured in a horizontal plane.	

4.5.7 Corrosion Protection

A. Detail all post-tensioned bridges consistent with the Specifications and Standards and include the following corrosion protection strategies:
   1.) Enhanced Post-tensioned systems.
   2.) Fully grouted tendons.
   3.) Multi-level anchor protection.
   4.) Watertight bridges.
   5.) Multiple tendon paths.

B. Three Levels of Strand Protection: Enhanced post-tensioning systems require three levels of protection for strand and four levels for anchorages. Deck overlays are not considered a level of protection for strands or anchorages.
   1.) Within the Segment or Concrete Element:
      a.) Internal Tendons.
      i.) Concrete cover.
      ii.) Plastic duct.
      iii.) Complete filling of the duct with approved grout.
      b.) External Tendons.
      i.) Hollow box structure itself.
      ii.) Plastic duct.
      iii.) Complete filling of the duct with approved grout.
   2.) At the segment face or construction joint (Internal and External Tendons)
      a.) Epoxy seal (pre-cast construction) or wet cast joint (cast-in-place construction.)
      b.) Continuity of the plastic duct.

c.) Complete filling of the duct with approved grout.

C. Four Levels of Protection for Anchorages on interior surfaces (interior diaphragms, etc.).
1.) Grout.
2.) Permanent grout cap.
3.) Elastomeric seal coat.
4.) Concrete box structure.

D. Four Levels of Protection for Anchorages on exterior surfaces (Pier Caps, expansion joints, diaphragms etc.)
1.) Grout.
2.) Permanent grout cap.
3.) Encapsulating pour-back.
4.) Seal coat (Elastomeric/Methyl Methacrylate on riding surface.)

4.5.8 Erection Schedule and Construction System

A. Include in the design documents, in outlined, schematic form, a typical erection schedule and anticipated construction system.

B. State in the plans, the assumed erection loads, along with times of application and removal of each of the erection loads.

4.5.9 Final Computer Run

Prove the final design by a full longitudinal analysis taking into account the assumed construction process and final long-term service condition, including all time related effects.

4.5.10 Epoxy Joining of Segments

All joints between precast segmental bridge segments must contain epoxy on both faces. This requirement applies to substructure and superstructure precast units. Dry segment joints are not allowed.

4.5.11 Principal Tensile Stresses

A. General
The principal tensile stress resulting from the long-term residual axial stress and maximum shear and/or maximum shear combined with shear from torsion stress at the neutral axis of the critical web shall not exceed the tensile stress limits specified herein. The principal stress shall be determined using classical beam theory and the principles of Mohr's Circle. Compressive stress due to vertical tendons provided in the web shall be considered in the calculation of the principal stress. The vertical force component of bonded draped longitudinal post-tensioned tendons shall be considered as a reduction in the shear force due to the applied loads. Local tensions produced in the webs resulting from anchorage of tendons as discussed in AASHTO 5.10.9.2 shall be included in the principal tension check. Local transverse flexural stress due to the out-of-plane flexure of the web itself at the critical section may be neglected in computing the principal tension in web. The width of the web for these calculations shall be measured perpendicular to the plane of the web.

B. Construction: Add the following additional Principal Tensile Stress Limits to AASHTO LRFD Bridge Design Specification 5.14.2.3.3: ''
1.) Principal web tension excluding "Other Loads": $3\sqrt{f'c}$, psi ($0.095\sqrt{f'c}$, ksi)''
2.) Principal web tension including "Other Loads": $4\sqrt{f'c}$, psi ($0.126\sqrt{f'c}$, ksi)

C. Service: Add the following additional Principal Tensile Stress Limits to AASHTO LRFD Bridge Design Specification 5.9.4.2.2 (using HL-93 loading at the Service III limit state regardless of environmental classification):
Principal web tension: $3\sqrt{f'c}$, psi ($0.095\sqrt{f'c}$, ksi)

4.6 Post-Tensioned Box Girders

4.6.1 General

During preliminary engineering and when determining structure configuration, give utmost consideration to accessibility and to the safety of bridge inspectors and maintenance. Precast, pretensioned Florida U-Beams are exempt from special requirements for inspection and access.

4.6.2 Access and Maintenance

A. Height: [2.5.2.6.3]

1.) For maintenance and inspection, the minimum interior, clear height of box girders is 6 feet.
2.) Proposed heights less than 6 feet require SDO approval. If structural analysis requires less than 5 feet box depth, consult the SDO and the District Structures and Facilities Engineer for a decision on the box height and access details.

B. Electrical:

1.) Design and detail in accordance with SDO Standard Drawings.
2.) Show interior lighting and electrical outlets spaced at not more than 50 feet.
3.) Where heights permit, show lighting mounted along center of box.

C. Access:

1.) Design entrances to box girders with in-swinging, hinged, solid doors. Design doors in diaphragms with in-swinging, hinged, 0.25-inch mesh screen doors. Equip all doors at abutments and entrances with a lock and hasp. Require that all locks on an individual bridge be keyed alike.
2.) Provide an access opening through all interior diaphragms. If the bottom of the diaphragm access opening is not flush with the bottom flange, provide concrete ramps to facilitate equipment movement.
3.) The minimum access opening is 32-inches wide x 42-inches tall. Indicate on plans that diaphragm access openings are to remain clear and are not to be used for utilities or other attachments. If utilities are required, provide additional areas or openings.
4.) Analyze access opening sizes and bottom flange locations for structural effects on the girder.
5.) Avoid entrance locations over traffic lanes and locations that will require extensive maintenance of traffic operations or that would otherwise impact the safety of inspectors or the traveling public.

D. Other Exterior Openings:

1.) Design each box girder with minimum 2-inch diameter ventilation or drain holes located in the bottom flange on both sides of the box spaced at approximately 50 feet or as needed to provide proper drainage. Place additional drains at all low points against internal barriers. Locate drains to accommodate bridge grade.
2.) Provide drains to prevent water (including condensation) from ponding near post-tensioning components, face of diaphragms, blisters, ribs and other obstructions. Show details on Contract Drawings. Include the following:
    a.) Specify that drains may be formed using 2-inch diameter permanent plastic pipes (PVC with UV inhibitor) set flush with the top of the bottom slab.
    b.) A small drip recess, ½-inch by ½-inch around bottom of pipe insert.
    c.) Drains at all low points against internal barriers, blisters, etc.
    d.) Drains on both sides of box, regardless of cross slope (to avoid confusion.)
    e.) Vermin guards for all drains and holes.
    f.) A note stating, “Install similar drains at all low spots made by barriers introduced to accommodate means and methods of construction, including additional blocks or blisters.”
3.) Require 0.25-inch screen on all exterior openings not covered by a door. This includes holes in webs through which drain pipes pass, ventilation holes, drain holes, etc.

4.) Design flexible barriers to seal openings between expansion joint segments of adjacent end units to prevent birds from roosting on the box end ledges. Barriers should be UV and weather resistant and easily replaceable.

E. Other Box Sections - Provide accessibility to box sections such as precast hollow pier segments in a manner similar to that for box girders, particularly concerning the safety of bridge inspectors and maintenance personnel. During preliminary engineering and when determining structure configuration, give utmost consideration to box girder accessibility and the safety of bridge inspectors and maintenance personnel. Due to the wide variety of shapes and sizes of hollow sections such as precast concrete pier segments, numerous site constraints and environmental conditions, each application will be considered on an individual, project-by-project basis. In all cases, contact the SDO for guidance in designing adequate inspection access and safety measures.

4.6.3 Prestress

A. Deck Slab:

1.) Detail all box girder deck slabs to be transversely post-tensioned.
2.) Where draped post-tensioning is used in deck slabs, consideration must be given to the final location of the center of gravity of the prestressing steel within the duct.
3.) Reduce critical eccentricities over the webs and at the centerline of box by ¼-inch from theoretical to account for construction tolerances.

4.6.4 Post-tensioning Anchorages

A. When temporary or permanent post-tensioning anchorages are required in the top or bottom slab of box girders, design and detail interior blisters, face anchors or other SDO approved means. Block-outs that extend to either the interior or exterior surfaces of the slabs are not permitted.

B. Provide continuous typical longitudinal mild reinforcing through all segment joints for Cast-in-place segmental construction.

C. Design and detail so that all future post-tensioning utilizes external tendons (bars or strands) and so that any one span can be strengthened independently of adjacent spans.

D. Detail anchor blisters so that tendons terminate no closer than 12-inches to a joint between segments.

E. Detail all interior blisters set back a minimum of 12-inches from the joint. Provide a “V”-groove around the top slab blisters to isolate the anchorage from any free water.

F. Transverse bottom slab ribs are not allowed. Design full height diaphragms directing the deviation forces directly into the web and slab.

Previous Practice

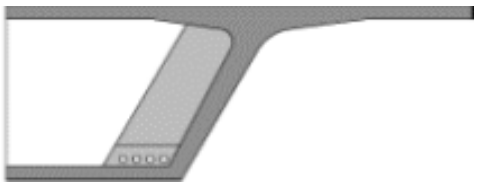

New Practice

G. Raised corner recesses in the top corner of pier segments at closure joints are not allowed. The typical cross section must be continued to the face of the diaphragm. Locate tendon anchorages to permit jack placement.

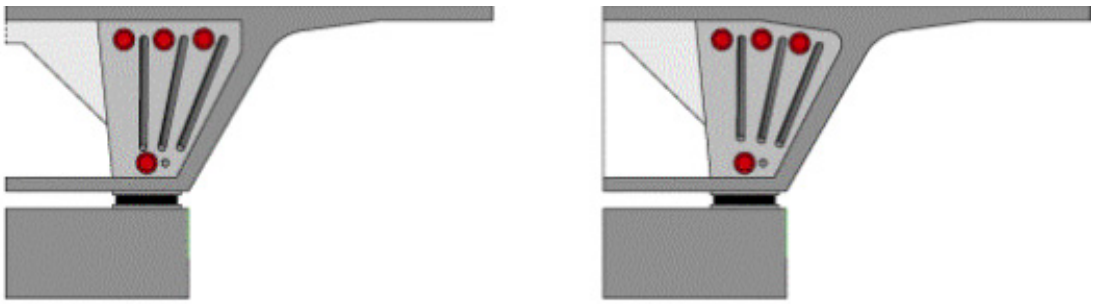

Previous Practice New Practice

4.6.5 Thermal Effects [5.14.2.3.5]

A. For detailing purposes, take the normal mean temperature from Table 6.2.

B. For Seasonal Variation (expansion/contraction), refer to Table 6.2 for temperature ranges.

C. Show temperature-setting variations for bearing and expansion joints on the bridge plans.

4.6.6 Creep and Shrinkage [5.14.2.3.6]

Calculate creep and shrinkage strains and effects in accordance with LRFD using Relative Humidity of 75%.

4.6.7 Expansion Joints

A. At expansion joints, provide a recess and continuous expansion joint device seat to receive the assembly, anchor bolts, and frames of the expansion joint, i.e. a finger or modular type joint. In the past, block-outs have been made in such seats to provide access for stressing jacks to the upper longitudinal tendon anchors set as high as possible in the anchor block. Lower the upper tendon anchors and re-arrange the anchor layout as necessary to provide access for the stressing jacks.

B. At all expansion joints, protect anchors from dripping water by means of skirts, baffles, v-grooves, or drip flanges. Ensure that drip flanges are of adequate size and shape to maintain structural integrity during form removal and erection.

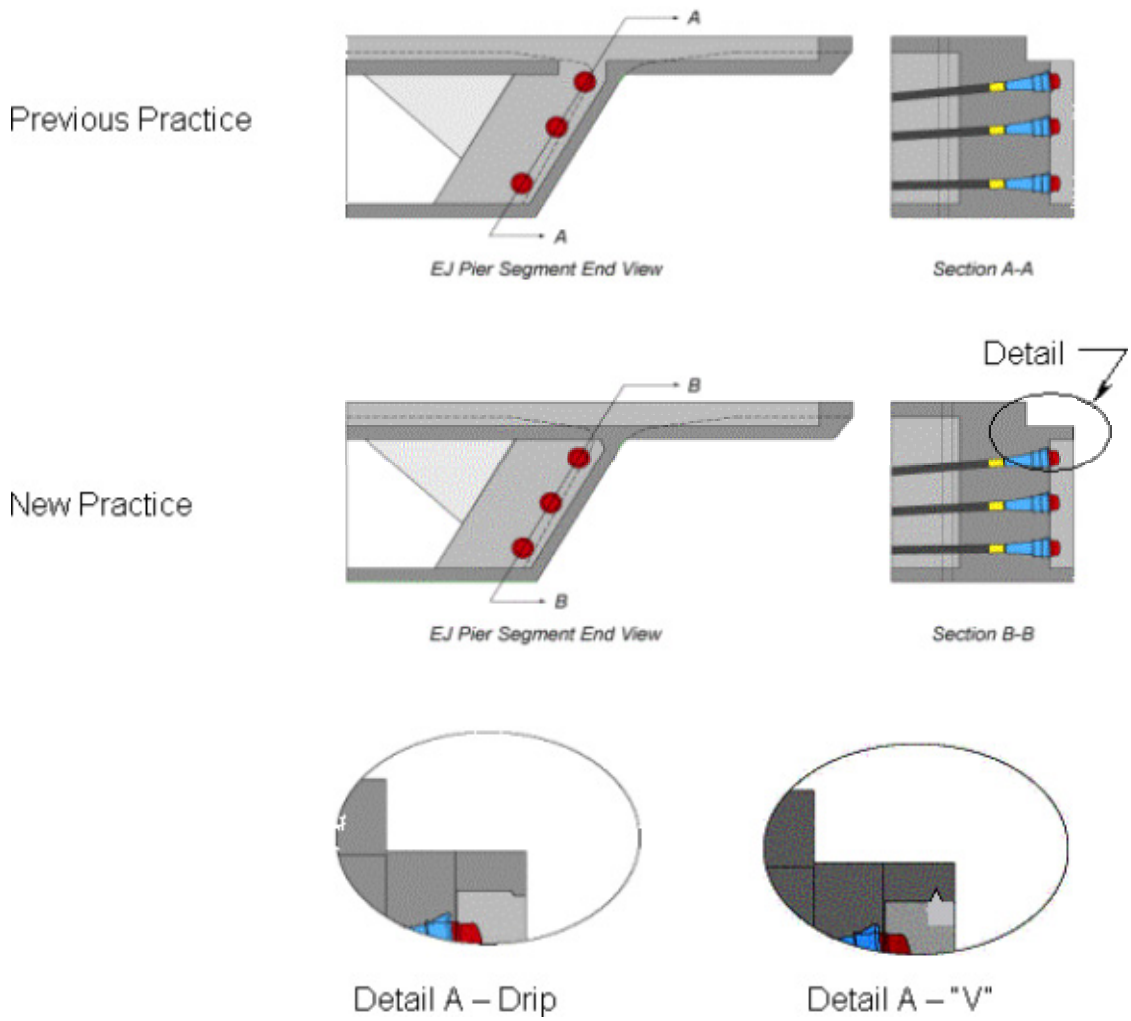

4.6.8 Construction Data Elevation and Camber Curve for Box Girders

A. General: Base Construction Data Elevations on the vertical and horizontal highway geometry. Calculate the Camber Curve based on the assumed erection loads used in the design and the assumed construction sequence.

B. Construction Data Elevations: Show construction data elevations in 3D space with "x", "y", and "z" coordinates. Locate the data points at the centerline of the box and over each web of the box.

C. Camber Curve: Provide Camber Curve data at the centerline of the box. Camber curve data is the opposite of deflections. Camber is the amount by which the concrete profile at the time of casting must differ from the theoretical geometric profile grade (generally a straight line) in order to compensate for all structural dead load, post-tensioning, long and short term time dependent deformations (creep and shrinkage), and effects of construction loads and sequence of erection.

4.6.9 Transverse Deck Analysis & Design

For concrete box girder bridges, perform a transverse deck analysis at the Service I and Strength I load combinations using the truck and tandem portion of the HL-93 live load (do not include the lane load). For deck design, do not include the wind effects for the Service I load combination. All analyses will be performed assuming no benefit from the stiffening effects of any traffic railing barrier and with a maximum multiple presence factor not greater than 1.0. For the for Service I load combination in transversely prestressed concrete decks, limit the outer fiber stress due to

transverse bending to $3\sqrt{f'_c}$ for aggressive environments and $6\sqrt{f'_c}$ for all other environments. For the Service I load combination in reinforced concrete decks of “I” girder bridges, see LRFD Article 5.7.3.4.

Chapter 5 Superstructure - Steel

5.1 General

A. This Chapter includes guidance for the design and detailing of steel bridges. Design steel bridge components in accordance with ***LRFD*** (see exceptions in B) and the requirements of this Chapter.

B. For a bridge with curved steel members for part or all of its length, design the entire bridge (with the exception of the traffic railing barriers) in accordance with the current ***AASHTO Guide Specifications for Horizontally Curved Highway Bridges*** and the current ***AASHTO Standard Specifications for Highway Bridges*** (including all Interim Specifications) with an HS-25 live load. Design the traffic railing barriers and all other bridges within the same project in accordance with the AASHTO ***LRFD Bridge Design Specifications***. On all bridges, use the current Structures Design Guidelines as appropriate.

C. Design structural steel for miscellaneous items such as ladders, platforms, and walkways in accordance with the current AISC ***Manual of Steel Construction, Load and Resistance Factor Design.***

D. See ***SDG*** Chapter 4 for concrete decks of steel bridges.

5.1.1 Girder Transportation

Coordinate the transportation of heavy and/or long girders with the Department's Permit Office during the design phase of the project.

5.2 Dead Load Camber [6.7.2]

A. Design the structure, including the slab, with a sequence for placing the concrete deck. Show the placement sequence on the plans.

B. Develop camber diagrams to account for the deck placing sequence. Analyze the superstructure geometry and properties and use the appropriate level of analysis to determine deflections and camber.

Commentary: Steel girders are to be fabricated to match the profile grade with an allowance for dead load deflection such that when the deck is placed, the amount of build-up is minimized. For skewed or curved bridges, or for bridges with large overhangs on the exterior girder, a grid, 3-D or finite element analysis may be necessary to determine accurately the girder deflections and required camber.

5.3 Structural Steel [6.4.1]

5.3.1 General

A. Specify that all structural steel conform to AASHTO M270 (ASTM A709), Grade 36, 50, 50W or HPS 70W. The Department may approve grade 100 or 100W for use in special cases.

B. Show the AASHTO M270 or ASTM A709 designation on the contract documents.

C. Do not specify painting of weathering steel unless approved by the SDO.

D. Miscellaneous hardware, including shapes, plates, and threaded bar stock, may conform to ASTM A709, Grade 36.

Commentary: AASHTO M270 and ASTM A709 include notch toughness, weldability and other supplementary requirements for steel bridges. When these supplementary requirements are specified, they exceed the requirements of other ASTM steel specifications.

5.3.2 Testing

A. Fracture critical members are defined as tension members or tension components of non-redundant members whose failure would result in the collapse of the structure. Examples include:

1. All tension components of single box superstructures.

2 . All tension components of double plate girder superstructures.
3. All tension components in the positive moment region of double box superstructures. Negative moment regions over the piers have four top flanges and are therefore considered redundant.

B. Avoid fracture critical members. Fracture critical requirements are expensive due to the intensive welding procedures, base metal and weld tests, and inspections after fabrication. Two girder systems on non-movable structures are undesirable and must be approved by the State Structures Design Engineer.

C. Designate on the plans, all:
1.) girder components (non-fracture critical tension components) that require CVN testing only.
2.) fracture critical girder components (defined in A).
3.) splice plates to be tested to the requirements of the tension components to which they are attached. See the ***SDM*** Chapter 14.

5.4 Bolts [6.4.3.1]

A. Design structural bolted connections as "slip-critical." Use ASTM A325, Type 1, high-strength bolts for painted connections, and Type 3 bolts for unpainted weathering steel connections.

B. Do not use ASTM A490 bolts unless approved by the SDO or DSDO.

C. Non-high-strength bolts may conform to ASTM A307.

D. Bolt diameters of 3/4, 7/8, 1, or 1 1/8-inch typically should be used. Larger bolts may be used with prior approval by the Department. One size bolt should be used for all structural connections on any given structure. See the ***SDM*** Chapter 14.

5.5 Minimum Steel Dimensions [6.7.3]

A. The following minimum dimensions have been selected to reduce distortion caused by welding and to improve girder stiffness for shipping and handling.
1.) The minimum thickness of plate girder and box girder webs is 7/16-inch.
2.) The minimum flange size for plate girders and top flanges of box girders is 3/4-inch x 12-inches.
3.) The minimum box girder bottom flange thickness is 1/2-inch.

B. Specify flange plate widths and web plate depths in 1-inch increments.

C. Specify plates in accordance with the commonly available thicknesses of Table 5.1.

D. Minimize the different flange plate thicknesses so that the fabricator is not required to order small quantities. See the ***SDM*** Chapter 14.

Table 5.1 Thickness Increments for Common Steel Plates

THICKNESS INCREMENT	PLATE THICKNESS
1/16-inch	3/16-inch to 3/8-inch
1/8-inch	3/8-inch to 1-inch
1/4-inch	> 1-inch

5.6 Box Sections

5.6.1 General

During preliminary engineering and when determining structure configuration, give utmost consideration to accessibility and to the safety of bridge inspectors and maintenance. See the ***SDM*** Chapter 14.

5.6.2 Access and Maintenance

A. Height:
1.) For maintenance and inspection, the minimum interior, clear height of box girders is 6 feet.

2.) Proposed heights less than 6 feet require SDO approval. If structural analysis requires less than 5 feet box depth, consult the SDO and the District Structures and Facilities Engineer for a decision on the box height and access details.

B. Electrical:
1.) Design and detail in accordance with SDO Standard Drawings.
2.) Show interior lighting and electrical outlets spaced at not more than 50 feet.
3.) Where heights permit, show lighting mounted along center of box.

C. Access:
1.) Design entrance doors to box girders with in-swinging, hinged, solid doors. Design doors in diaphragms with in-swinging, hinged, 0.25-inch mesh, screen doors. Equip all doors at abutments and entrances with a lock and hasp. Require that all locks on an individual bridge be keyed alike.
2.) Provide an access opening through all interior diaphragms.
3.) The minimum access opening at entrance and diaphragm opening is 32-inches wide x 42-inches tall or 36-inch diameter. Indicate on the plans that diaphragm access openings are to remain clear and are not to be used for utilities or other attachments. If utilities are required, provide additional areas or openings.
4.) Analyze access opening sizes and bottom flange locations for structural effects on the girder.
5). Avoid entrance locations over traffic lanes and locations that will require extensive maintenance of traffic operations or that would otherwise impact the safety of inspectors or the traveling public.

D. Other Exterior Openings:
1.) Design each box girder with minimum 2-inch diameter ventilation or drain holes located in the bottom flange on both sides of the box spaced at approximately 50 feet or as needed to provide proper drainage. Place drains at all low points against internal barriers.
2.) Require 0.25-inch mesh screen on all exterior openings not covered by a door. This includes holes in webs through which pass utility pipes, ventilation holes, drain holes, etc.
3.) Design flexible barriers to seal openings between expansion joint segments of adjacent end units to prevent birds from roosting on the box end ledges. Barriers should be UV and weather resistant and easily replaceable.

5.6.3 Cross Frames [6.7.4]

Design external diaphragms as an “X-frame” or a “K-frame” as noted for “I-girders." Detail “X-frames” or “K-frames” bolted to girders at stiffener locations. Internal diaphragms may be connected by welding or bolting to stiffeners in the fabrication shop. For box girders, use a “K-frame” internal diaphragm.
Commentary: An “X-frame” internal diaphragm is easier to fabricate and erect than a “K-frame,“ but the “K-frame” allows easier inspection access in box girders.

5.6.4 Lateral Bracing [6.7.5]

A. For box girders, design an internal lateral bracing system in the plane of the top flange.

B. Detail the plans to avoid interferences between the lateral bracing and stay-in-place metal forms.

Commentary: A single diagonal member is preferred over an “X-diagonal” configuration for ease of fabrication and erection.

3. The following requirements shall be added as a new Section 5.6.5 to the Structures Design Guidelines:

5.6.5 Transverse Concrete Deck Analysis

For steel box girder bridges, perform a transverse deck analysis at the Service I and Strength I load combinations using the truck and tandem portion of the HL-93 live load (do not include the lane load). For deck design, do not include the wind effects for the Service I load combination. All analyses will be performed assuming no benefit from the stiffening effects of any traffic railing barrier and with a maximum multiple presence factor not greater than 1.0. For the for Service I

load combination in transversely prestressed concrete decks, limit the outer fiber stress due to transverse bending to $3\sqrt{f'_c}$ for aggressive environments and $6\sqrt{f'_c}$ for all other environments. For the Service I load combination in reinforced concrete decks, see LRFD Article 5.7.3.4.

5.7 Diaphragms and Cross Frames for "I-Girders" [6.7.4]

Design diaphragms with bolted connections at stiffener locations and connected directly to stiffeners without the use of connection plates whenever possible. Generally, a “K-frame” detailed to eliminate variation from one diaphragm to another, is the most economical arrangement and should be used. For straight bridges with a constant cross section, parallel girders, and a girder-spacing-to-girder-depth ratio less than two, an “X-frame” design is generally the most economical and must be considered.

5.8 Transverse Intermediate Stiffeners [6.10.8.1]

A. Specify that intermediate stiffeners providing diaphragm connections be fillet welded to the compression flange and fillet welded or bolted to the tension flange or flanges subject to stress reversal.

Commentary: On tension flanges, welded connections are preferred because of the lower cost, but the design of the flange must consider the appropriate fatigue detail category. A bolted connection is acceptable if the cost is justified.

B. Specify that intermediate stiffeners on plate girders without diaphragm connections have a “tight-fit” at the tension flange and be fillet welded to the compression flange.

C. Specify that intermediate stiffeners on box girders be fillet welded to the compression flange and cut back at the tension flange end or on flange subject to stress reversal.

5.9 Bearing Stiffeners [6.10.8.2]

A. For bearing stiffeners that provide diaphragm connections, specify a “mill-to-bear” finish on the bottom flange and fillet welded connections to both the top and bottom flanges.

B. In negative moment regions only, stiffeners with attached diaphragms may be bolted to the top flange.

Commentary: In negative moment regions, welded connections are preferred because of the lower cost, but the design of the flange must consider the appropriate fatigue detail category.

5.10 Longitudinal Stiffeners [6.10.8.3]

Avoid the use of longitudinal stiffeners. If they must be used, the stiffener should be made continuous on one side of the web with transverse stiffeners located on the other side of the web. For aesthetic reasons, avoid placing transverse stiffeners on the exterior face of exterior girders.

Commentary: If longitudinal stiffeners are considered, an analysis of material and labor costs should be performed to justify their use. Their use may be justified on deep, haunched girders but normally cannot be justified on constant depth girders. When longitudinal stiffeners are used on the same side of the web as the transverse stiffeners, the intersection of the stiffeners must be carefully designed with respect to fatigue.

5.11 Connections and Splices [6.13]

A. Specify and detail bolted (not welded) field connections. Field welding is allowed only by prior written approval by the SDO or the appropriate DSDO and then, only when bolting is impractical or impossible.

B. Where cantilever brackets are connected to exterior girders and tie plates are used to connect the top flange of the bracket to the top flange of the floor beam, do not show the tie plates connected to the girder top flange. To account for alignment tolerances, detail short, slotted holes in the top flange of the cantilever brackets (perpendicular to the bracket web). Reduce the allowable bolt stress accordingly.

5.11.1 Slip Resistance [6.13.2.8]

A. Design bolted connections for Class B surface condition.

B. When the thickness of the plate adjacent to the nut is greater than or equal to ¾ inch, base the strength of the connection on the bolt shear strength with threads excluded from the shear plane.

Commentary: This surface condition agrees with Florida fabrication practice.

5.11.2 Welded Connections [6.13.3]

A. Do not show a specific, pre-qualified, complete-joint penetration weld designation on the plans unless a certain type of weld; i.e., "V," "J," "U," etc., is required. See ***SDM 14 Structural Steel***

Commentary: The fabricator should be allowed to select the type of complete-joint penetration weld to use, and should show all welds on the shop drawings.

B. On the plans, identify areas that are subject to tension and areas subject to stress reversal.

Commentary: This information will enable inspection personnel to identify the type and extent of testing required. Also, the shop drawings will further identify these areas.

C. When welding is required during rehabilitation or widening of an existing structure, show on the plans, the type of existing base metal. Advise the District Structures Design Office if the base metal type cannot be determined, or if the type is not an approved base metal included in the ***ANSI/AASHTO/AWS Bridge Welding Code***. The State Materials Office and the Department's independent inspection agency will then determine the welding procedures and welding inspection requirements for the project.

5.11.3 Welded Splices [6.13.6.2]

A. At flange transitions, do not reduce the cross-sectional area by more than one-half the area of the larger flange plate.

Commentary: These proportions will allow a smooth flow of stress through the splice.

B. Maintain constant flange widths within each field-bolted section.

Commentary: By having constant width flange plates in a field section, the fabricator may order plates in multiples of the flange width, butt weld the plates full width, and then strip-out the flanges. Thus, the fabricator is required to make a minimum number of butt welds, handle a minimum number of pieces, and, thereby, minimize his fabrication costs.

C. The following criteria may be used to make a determination of the number of pounds, Δw, of material that must be saved to justify the cost of introducing a flange transition:
   1.) For 36 ksi material: $\Delta w = 300 + (25.0) \times$ (area of the smaller flange plate, in^2),
   2.) For 50 ksi material : $\Delta w = 250 + (21.3) \times$ (area of the smaller flange plate, in^2),
   3.) For 70 ksi material : $\Delta w = 220 + (18.8) \times$ (area of the smaller flange plate, in^2).

5.12 Corrosion Protection

A. Specify uncoated weathering steel or a three-coat inorganic zinc coating system on exterior surfaces. For box interiors, specify a single coat of inorganic zinc. Other systems must be approved by the SDO or the DSDO.

B. Specify white or gray for box interior colors. The final exterior finish color is an aesthetic treatment and must be approved by the DSDO.

5.12.1 Uncoated Weathering Steel

A. Design and specify weathering steel per the ***FHWA Technical Advisory T5140.22***.

B. Sites classified as Slightly Aggressive for Superstructures (See Figure 1-1.) are suitable for the use of weathering steel without long-term, on-site panel testing.

C. Specify ASTM A325 Type 3 bolts for weathering steel.

D. Painting of the exterior girder/fascia may be required for aesthetic appearance.

5.12.2 Single Coat Inorganic Zinc

Suitable locations for the use of single coat inorganic zinc coating without on-site testing must comply with all of the following:

A. General Criteria: Environments classified as Slightly Aggressive for Superstructure.

B. Site Specific Criteria:

1.) Locations where the pH of the rainfall or condensation is between 4-10.

2.) Locations not subjected to salt spray or salt laden run-off.

3.) Locations not subjected to concentrated acid pollution caused by the following sources: coal burning power plant; phosphate plant; acid manufacturing plant; any site yielding high levels of sulfur compounds.

Commentary: Inorganic zinc coatings (either gray or green) quickly fade in approximately 3 months to a uniform gray color similar to Federal Color Standard Number 37866. For color, the fascia of the exterior girders can be coated with the three-coat inorganic zinc system.

5.12.3 Galvanizing

A. Galvanizing of Bolts for Bridges: Normally, all anchor bolts, tie-down hardware, and miscellaneous steel (ladders, platforms, grating, etc.) are to be hot-dip galvanized. While ASTM A307 (coarse thread) bolts must be hot-dip galvanized, A325 (fine thread) bolts must be mechanically galvanized when utilized with galvanized steel components. Other applications not requiring full tensioning of the bolts may use hot-dip galvanized A325 bolts.

B. Galvanizing of Bolts for Miscellaneous Structures: Specify hot-dipped galvanized bolts for connecting structural steel members of miscellaneous structures such as overhead sign structures, traffic mast arms, ground-mounted signs, etc.

Chapter 6 Superstructure Components

6.1 General

This Chapter contains information and criteria related to the design, reinforcing, detailing, and construction of bridge superstructure elements and includes deviations from ***LRFD***. This chapter covers barriers, curbs, joints, bearings, and deck drains. For concrete beams and deck slabs, see Chapter 4.

6.2 Curbs and Medians [13.11]

A. For bridge projects that utilize curbs, match the curb height and batter on the roadway approaches. Bridges with sidewalks are usually encountered in an urban environment, and the curb height will normally be 6-inches.

B. When the roadway approaches have a raised median, design the bridge median to match that on the roadway.

6.3 Temperature Movement [3.12.2]

For all bridges other than longitudinally post-tensioned, segmental concrete bridges, calculate movement due to temperature variation (range) with an assumed mean temperature of 70 degrees Fahrenheit at the time of construction. Base joint and bearing design on the expansion and contraction for temperature ranges of Table 6.2.

6.4 Expansion Joints

A. Minimize the use of joints. Bridge deck joints are a continuous minor maintenance problem and may be a source of structural deterioration resulting in a major bridge maintenance problem.

B. Expansion joints in bridge decks can be avoided by providing deck slab continuity at intermediate bents or piers. Generally, this is accomplished by designing continuous superstructures, or by allowing continuity of the deck slab, even when the supporting beams or girders are simply supported. In either case, the structures must be designed to accommodate the movements, or to resist the stresses, due to factors such as: temperature, elastic shortening, creep, and shrinkage.

C. For "Long Bridges," (see Chapter 4) detail expansion joints for installation as an independent operation performed after deck-planing requirements have been met.

D. For new construction, use only joint types listed in Table 6.1. The values in Table 6.1 are maximum design values for each joint type.

E. Specify silicone seals for all cast-in-place, flat slab bridges. Limit the continuous unit lengths to accommodate the allowable movement listed in Table 6-1.

Table 6.1 Joint Width Limitations by Joint Type

Joint Type	Maximum Joint Width*
Poured Rubber	¾-inch
Silicone Seal	2-inch
Strip Seal	3-inch
Modular Joint	Unlimited
Finger Joint	Unlimited
*Joints in sidewalks must meet all requirements of Americans with Disabilities Act	

.

Table 6.2 Temperature Range by Superstructure Type

Structural Material of Superstructure	**Temperature** (Degrees Fahrenheit)			
	Mean	High	Low	Range
Concrete Only	70	95	45	50
Concrete Deck on Steel Girder	70	110	30	80
Steel Only	70	120	30	90

F. The thermal coefficients of ***LRFD*** **[5.4.2.2]** and **[6.4.1]** for normal density concrete and structural steel, respectively, apply to the material of the main longitudinal supporting beams or girders.

6.4.1 Expansion Joint Provisions [14.5.1]

A. When an expansion joint is required, satisfy the following criteria as applicable:

1.) Proprietary joint device must be designed in accordance with ***LRFD*** and installed in strict conformance with the manufacturer's specifications unless directed otherwise by the Department.

2.) Ensure that joint components will accommodate the full range of structure movement without exceeding the manufacturer's limitations and/or design values, particularly at maximum joint opening.

3.) The joint must provide a good riding surface, relatively free from vibration and noise.

4.) Design frame rails to resist all anticipated loads, including impact

5.) The joint will not transfer undue stresses to the structure.

6.) Specify joint seal elastomers with a minimum five year service life.

7.) Design the joint for minimum maintenance and ease of access and parts replacement.

8.) Design a reasonably leak-proof joint with a continuous sealing element for the entire joint length.

9.) Specify that the joint material be resistant to corrosion and ultraviolet rays and is not a catalyst or vehicle for electrolytic action.

B. In some instances, open joints may be acceptable if they have provision for diverting drainage without causing damage to the bridge bearings or other structural elements and must have the prior approval of the SDO.

6.4.2 Movement [14.4] [14.5.3]

A. When designing expansion joints, analyze movement due to temperature variation, the effects of creep, shrinkage, skew, rotation, lateral shear, and vertical shear.

B. Design conventional, reinforced and/or prestressed concrete superstructure joints for the calculated movement due to temperature change plus creep and shrinkage, or for 115% of the calculated movement due to temperature change alone, however, the joint opening must not be less than 5/8 inch at 70 degrees Fahrenheit.

C. Design longitudinally post-tensioned, superstructure joints for creep and shrinkage plus 120% of the calculated movement due to temperature change.

D. The width, "**W**", of the joint must meet the requirements of ***LRFD*** **[14.5.3.2]**, except that "**W**" for the different joint types must not exceed the appropriate value from Table 6.1. When setting the joint, either the design width (**W)** must be decreased by the amount of anticipated movement due to creep and shrinkage, or the joint must be set to the minimum width for installing the joint, whichever results in the wider opening.

6.4.3 Joints for Bridge Widening

A. Contact the District Structures and Facilities Office to determine the type and condition of all existing joints to be widened. Existing joint types by group are:

1.) Group 1: Strip seal, compression seal, poured rubber, open joint, silicone seal, copper water-stop, and "Jeene."

2.) Group 2: Sliding Plate, finger joint, and modular.

B. When existing joints are to be widened, determine the extent of existing concrete deck to be removed. Limit removal of existing concrete to what is necessary to remove the existing joint armor and to permit proper anchorage of the new joint armor. Detail the existing joint removal and/or note that the Contractor not damage the existing deck reinforcing steel when installing the new joint.

6.4.4 Lengthening Group 1 Joints

A. If the existing joint consists of armored strip seal and the steel armor is in good condition, remove the existing seal, extend the armor into the widening by welding new sections to existing armor and provide new strip seal continuously across the entire deck.

B. If an existing armored joint is in poor and irreparable condition, or if the existing joint system consists of armored or non-armored compression seal in good or bad condition, remove the existing seal and armor, repair the damaged concrete, and install a new Group 1 Joint other than a compression seal.

C. If the existing joint consists of copper water-stop, poured rubber, or silicone, and is performing satisfactorily, remove all existing joint material, extend joint gap into the widening, and install a new silicone seal.

D. If the existing joint is an open joint, is performing satisfactorily, and the joint gap is not wider than 1-inch at 70 degrees Fahrenheit, extend the open joint into the widening. If it is not performing satisfactorily, extend the gap into the widening and seal the entire joint with silicone sealer.

E. If the existing joint is an open joint that is wider than 1-inch at 70 degrees Fahrenheit, provide a block-out on the entire bridge deck for the new joint system.

F. If the existing joint is a Jeene Joint and is performing satisfactorily, extend the joint gap into the widening, remove the existing Jeene Joint and provide a new Jeene Joint. If it is not practicable to install a new Jeene Joint, provide a block-out for the new joint system.

Commentary: Concrete spalls adjacent to existing joints must be repaired prior to joint lengthening. All neoprene seals must be one piece and should extend to the face of the barrier at the high side of deck surface and past the gutter line with a 4 inch upturn at the low side of the deck surface. An "approved seal" is a seal that either is listed on the Department's QPL or is approved by the DSDE, District Maintenance Engineer, or SDO, as appropriate.

6.4.5 Widenings - Group 2 Joints

A. If the existing joint is in good condition, or repairable, lengthen it using the same type of joint after performing any needed repairs. Require that lengthening be performed in conformance with the joint manufacturer's recommendations.

B. If the existing joint material is proprietary and no longer available, it should be replaced with a Group 2 Joint that will accommodate the same calculated movement.

6.4.6 Post Tension Bridges.....See 4.8.7 Expansion Joints

6.5 Bearings

A. Bridge bearings must accommodate the movements of the superstructure and transmit loads to the substructure supports. The type of bearing depends upon the amount and type of movement as well as the magnitude of the load.

B. In general, simple-span, prestressed concrete beams, simple-span steel girders, and some continuous beams can be supported on composite neoprene bearing pads (elastomeric bearings). Larger longitudinal movements can be accommodated by using PTFE polytetrafluoroethylene (Teflon) bearing surfaces on external steel load plates.

C. Structures with large bearing loads and/or multi-directional movement might require other bearing devices such as pot, spherical, or disc bearings.

6.5.1 Design

A. Specify composite neoprene bearing pads and other bearing devices that have been designed in accordance with ***LRFD*** Method B, the Department's ***Standard Specifications for Road and Bridge Construction***, and this document. Until ongoing research is completed, delete Article 14.7.5.3.5 for Combined Compression and Rotation.

B. Whenever possible, and after confirming their adequacy, standard designs should be used. Only when the neoprene capacities of the standard pads have been exceeded or when site conditions or constraints dictate provisions for special designs (such as multi-rotational capability) should other bearing systems or components be considered. If other bearing systems or components are considered, the bearing types must be selected based on a suitability analysis. Comply with ***LRFD*** Table 14.6.2-1, Bearing Suitability, to select an appropriate bearing type. The special design requirements of ***LRFD*** covers specific material properties, mating surfaces, and design requirements such as coefficient of friction, load resistance, compressive stress, compressive deflection, and shear deformation, as applicable to the various bearing systems.

Commentary: If the resistance factor for a bearing is other than 1.0, the design calculations must include the method for obtaining such a factor.

6.5.2 Maintainability

A. The following provisions apply to all bridges with the exception of flat slab superstructures (cast-in-place or precast) resting on thin bearing pads.
   1.) Design and detail superstructure using bridge bearings that are reasonably accessible for inspection and maintenance.
   2.) On all new designs make provisions for the replacement of bearings without causing undue damage to the structure and without having to remove anchorages or other devices permanently attached to the structure.
   3.) Design and detail provisions for the removal of bearings, such as jacking locations, jacking sequence, jack load, etc. Verify that the substructure width is sized to accommodate the jacks and any other required provisions.
   4.) When widening a bridge that does not already include provisions for replacing bearings, consult the District Maintenance Engineer who will decide if bearing replacement provisions must be made on the plans.

B. The replacement of bearings for conventional girder structures, particularly concrete beams, is relatively simple, as jacking can be accomplished between the end diaphragms and substructure. For these bridges, a note describing the jacking procedure for replacing bearings will usually suffice. Certain non-conventional structures, such as steel or segmental concrete box girders, require separate details and notes describing the procedures. Always include a plan note stating that the jacking equipment is not part of the bridge contract.

6.5.3 Lateral Restraint

A. Determine if lateral restraint of the superstructure of a bridge is required and make necessary provisions to assure that the bridge will function as intended. These provisions include considerations for the effects of geometry, creep, shrinkage, temperature, and/or seismic on the structure. When lateral restraint of the superstructure is required, develop the appropriate method of restraint as described hereinafter.

B. Elastomeric Bearings: When the required restraint exceeds the capacity of the bearing pad, the following appropriate restraint must be provided:
   1.) For concrete girder superstructures, provide concrete blocks cast on the substructure and positioned to not interfere with bearing pad replacement.
   2.) For steel girder superstructures, provide extended sole plates and anchor bolts.

C. Mechanically Restrained Bearings: Bearings that provide restraint through guide bars or pintles (e.g., pot bearings), must be designed to provide the required lateral restraint.

6.6 Deck Drainage [2.6.6]

A. Minimize the use of scuppers for deck drainage. Design scuppers or deck drains to pipe drainage to the ground or use extended downspouts. Ensure that run-off will be carried away from substructure as well as underlying infrastructure.

B. In order to facilitate run-off and avoid corrosion, minimize the use of stiffeners and bracing and avoid crevices.

6.6.1 Deck Drains

A. For simple deck drains (i.e. scuppers) encased in concrete, specify schedule 80, UV-resistant Polyvinyl-Chloride (PVC), gray cast iron, or ductile cast iron.

B. For other deck drains encased in concrete, (i.e. grates and inlets) specify gray cast iron, ductile cast iron, or galvanized steel.

C. Do not specify gray cast iron or ductile cast iron for use in Extremely Aggressive Environments.

D. The maximum width of a grate slot is 1-1/2 inches.

6.6.2 Drain Conveyances

A. For drain conveyances encased in concrete, specify UV-resistant, schedule 80, Polyvinyl Chloride (PVC), Polyethylene (PE), or ductile cast iron.

B. For drain conveyances not encased in concrete, specify machine-made or filament-wound “Fiberglass” (Glass-Fiber-Reinforced-Thermosetting-Resin), or ductile cast iron. Get Department approval before specifying UV-resistant, schedule 80, Polyvinyl Chloride (PVC) for external drain conveyances.

C. Do not specify ductile cast iron in Extremely Aggressive Environments.

D. Do not specify pipe diameters less than 4-inches, or bends greater than 45 degrees.

6.7 Traffic Railing [13.7]

6.7.1 General

A. Unless otherwise approved, all new bridge, approach slab and retaining wall mounted traffic railings, traffic railing/sound barrier combinations and traffic railing/glare screen combinations proposed for use in new or temporary construction, resurfacing, restoration, rehabilitation (RRR) and widening projects must:

1.) Have been successfully crash tested to Test Level 4 (minimum), Test Level 5 or Test Level 6 criteria (as appropriate) in accordance with ***National Cooperative Highway Research Program (NCHRP) Report 350*** and ***LRFD*** for permanent installations.
2.) Have been successfully crash tested to Test Level 3 (minimum) in accordance with ***NCHRP Report 350*** and ***LRFD*** for temporary installations shielding drop-offs.
3.) Have been successfully crash tested to Test Level 2 (minimum) in accordance with ***NCHRP Report 350*** and ***LRFD*** for temporary installations shielding work zones without drop-offs (45 mph or less design speed).
4.) Meet the appropriate strength and geometric requirements of ***LRFD*** Section 13 for the given test levels and crash test criteria.
5.) Be upgraded on both sides of a structure when widening work is proposed for only one side and the existing traffic railing on the non-widened side does not meet the criteria for new traffic railings.
6.) Be constructed on decks reinforced in accordance with Chapter 4 for permanent installations on new construction, widenings and partial deck replacements.
7.) Be constructed on decks and walls meeting the requirements of Section 6.7.4 for retrofit construction.
8.) Be constructed and installed in accordance with the crash tested and accepted details for temporary installations.

B. The traffic railings shown on the ***Structures Standard Drawings***, Index No. 700 Series and ***Design Standards*** Index Nos. 412 and 413 have been determined to meet the applicable crash testing requirements and should be used on structures in Florida. The applicability of each of these standard traffic railings in permanent installations is addressed in the ***Plans Preparation Manual, Volume I.***

6.7.2 Non-Standard or New Railing Designs

A. The use of a non-FDOT standard or new structure mounted traffic railing requires the prior approval of the Structures Design Office. Proposed modifications to standard traffic railings also require prior Structures Design Office approval. Such proposed modifications may include but are not limited to reinforcement details, surface treatments, material substitutions, geometric discontinuities, non-standardized attachments, end transition details and traffic face geometry.

B. Submit all proposed non-FDOT standard, new or modified structure mounted traffic railing designs to the Structures Design Office for review and possible approval. Make this submittal early in the design process preferably prior to submittal of the Typical Section Package.

C. A non-FDOT standard or new structure mounted traffic railing design may be approved by the Structures Design Office if it meets the requirements of No. 1 and Nos. 2, 3 or 4 below:

1.) The Structures Design Office has determined that the design will provide durability, constructability, and maintainability equivalent to the standard FDOT traffic railing designs.

2.) It has been successfully crash tested in accordance with NCHRP Report 350 Test Level 4 (minimum) criteria for permanent installations and Test Level 2 or 3 criteria (as appropriate) for temporary installations.

3.) It has been approved for specific uses by FHWA after evaluation of results from successful crash testing based on criteria that predate NCHRP Report 350 Test Levels 2, 3 and 4 (as appropriate).

4.) It has been evaluated by the Structures Design Office and identified as similar in strength and geometry to another traffic railing that has been successfully crash tested in accordance with NCHRP Report 350 Test Level 4 (minimum) criteria for permanent installations and Test Level 2 or 3 criteria (as appropriate) for temporary installations.

Commentary:
The background for this policy is based on the Test Level Selection Criteria as defined in Section 13 of the AASHTO LRFD Bridge Design Specifications and on historical construction costs and in-service performance of standard FDOT Test Level 4 traffic railings used in permanent installations. This background can be summarized as follows:

1. In general, a greater potential exists for overtopping or penetrating a shorter height, lower test level traffic railing versus a similarly shaped Test Level 4 traffic railing. This potential is further aggravated on tall bridges and on bridges over intersecting roadways or water deep enough to submerge an errant vehicle. Vehicle performance during higher speed impacts is also more critical on lower test level traffic railings.

2. Little construction cost savings can be realized by using a lower test level traffic railing. In some cases, particularly with the more elaborate or ornate traffic railing designs, initial construction costs and long term repair and maintenance costs could actually be greater than those for a standard FDOT Test Level 4 design.

3. Aesthetically pleasing and open Test Level 4 designs are available for use where appropriate.

4. On bridges and retaining walls with sidewalks where special aesthetic treatments are desired or required, the use of an aesthetic pedestrian railing located behind a Test Level 4 traffic railing is a more appropriate solution. The aesthetics of the traffic railing should complement the pedestrian railing.

D. For more detailed information on FDOT structure mounted traffic railings, refer to the ***Structures Standard Drawings***. For additional information about crash-tested traffic railings currently available or about traffic railings currently under design or evaluation, contact the Structures Design Office.

6.7.3 FHWA Policy

A. Since September 1,1986, the Federal Highway Administration (FHWA) has required highway bridges on the National Highway System (NHS) and the Interstate Highway System to have crash-tested railing. Current policy is stated in the following documents:

1.) Intermodal Surface Transportation Efficiency Act of 1991 (ISTEA).
http://www.fhwa.gov/legsregs/legislat.html
Required that measures to enhance the crashworthiness of roadside features accommodate vans, minivans, pickup trucks, and 4-wheel drive vehicles, as well as cars.

2.) National Cooperative Highway Research Program (NCHRP) Report 350, Recommended Procedures for the Safety Performance Evaluation of Highway Features.
http://safety.fhwa.dot.gov/programs/roadside_hardware.htm
Provides guidance for testing highway features to assess safety performance of those features. Guidance includes definitions of crash-test levels with specified vehicle, speed, and impact angle for each level.

3.) May 30, 1997, memorandum from Dwight Horne on the subject of "Crash Testing of Bridge Railings."
http://safety.fhwa.dot.gov/fourthlevel/hardware/pdf/bridge.pdf
*Identifies 68 crash-tested bridge rails, consolidating earlier listings and establishing tentative equivalency ratings that relate previous testing to **NCHRP Report 350** test levels.*

4.) July 25, 1997 memorandum from Donald Steinke on the subject of "Identifying Acceptable Highway Safety Features."
http://fhwa.dot.gov/legsregs/directives/policy/ra.htm
Clarifies and summarizes policies on bridge traffic railing, points to authorities for requiring testing of bridge traffic railing, and identifies methods for submitting new rails for testing. This document also identifies exceptions, one of which is the replacement or retrofitting of existing bridge traffic railing unless improvements are being made on a stretch of highway that includes a bridge with obsolete railing.

B. On its web site, FHWA provides current information on three general categories of roadside hardware that are tested and evaluated using ***NCHRP Report 350*** criteria; one of those categories is Bridge Railing.
See Bridge Railings at http://safety.fhwa.dot.gov/fourthlevel/hardware/bridgerailings.htm

6.7.4 Existing Obsolete Traffic Railings

A. General

1.) FDOT promotes highway planning that replaces or upgrades non-crash tested traffic railing on existing bridges to current standards, or that at least increases the strength or expected crash performance of these traffic railings. FDOT has developed two sets of Structures Standards, the Index 770 and 780 Series, for retrofitting existing structures with traffic railing types that have performed well in crash tests and are reasonably economic to install. Detailed instructions and procedures for retrofitting obsolete traffic railings on existing structures are included in the Structures Standard Drawings.

2.) When rehabilitation or renovation work is proposed on an existing structure with traffic railings that do not meet the criteria for new railings as provided above, replace or retrofit the existing traffic railings to meet the crash-worthy criteria unless an exception is approved. Refer to Chapter 23 of the ***Plans Preparation Manual, Volume 1***, for information about exceptions.

B. FHWA Policy on Existing Traffic Railings
The FHWA requires that bridge railing on the National Highway System (NHS) meet requirements of ***NCHRP Report 350:***
"all new or replacement safety features on the NHS covered by the guidelines in the ***NCHRP Report 350*** that are included in projects advertised for bids or are included in work done by force-account or by State forces on or after October 1, 1998, are to have been tested and evaluated and found acceptable in accordance with the guidelines in the ***NCHRP Report 350*** " (See Section 6.7.3, Number 4).

However, FHWA softens this requirement somewhat by allowing exceptions: "Bridge railings tested and found acceptable under other guidelines may be acceptable for use on the NHS." This is a specific reference to the Horne memo titled "Crash Testing of Bridge Railings" (See Section 6.7.3, Number 3.)

"The FHWA does not intend that this requirement (that new safety features installed on the NHS be proven crashworthy in accordance with the guidelines in the ***NCHRP Report 350***) result in the replacement or upgrading of any existing installed features beyond what would normally occur with planned highway improvements."

This statement is qualified by a requirement that states have a "rational, documented policy for determining when an existing non-standard feature should be upgraded."

C. Traffic Railing Retrofit Concepts and Standards

Existing non-crash tested traffic railings designed in accordance with past editions of the AASHO and AASHTO Standard Specifications for Highway Bridges will likely not meet current crash test requirements and will also likely not meet the strength and height requirements of the AASHTO LRFD Bridge Design Specifications. The retrofitting of these existing non-crash tested traffic railings reduces the separate but related potentials for vehicle snagging, vaulting and/or penetration that can be associated with many obsolete, non-crash tested designs.

The Thrie Beam Guardrail Retrofit and Vertical Face Retrofit Structures Standards, Index 770 and 780 Series, respectively, are suitable for retrofitting specific types of obsolete structure mounted traffic railings. These retrofits provide a more economical solution for upgrading obsolete traffic railings when compared with replacing the obsolete traffic railings and portions of the existing bridge decks or walls that support them. As these retrofits do not provide for any increase in clear width of roadway, and in a few cases decrease clear width by approximately 2 inches, they should only be considered for use on structures where adequate lane and shoulder widths, sight distances and transition lengths are present. The potential effects of installing a retrofit should be evaluated to ensure that the accident rate will not increase as a result. Detailed guidance and instructions on the design, plans preparation requirements and use of these retrofits is included in the individual Structures Standards.

When selecting a retrofit or replacement traffic railing for a structure that will be widened or rehabilitated, or for a structure that is located within the limits of a RRR project, evaluate the following aspects of the project:

1.) Elements of the structure
   a.) Width, alignment and grade of roadway along structure.
   b.) Type, aesthetics, and strength of existing railing.
   c.) Structure length.
   d.) Potential for posting speed limits in the vicinity of the structure.
   e.) Potential for establishing no-passing zones in the vicinity of the structure.
   f.) Approach and trailing end treatments (guardrail, crash cushion or rigid shoulder barrier).
   g.) Strength of supporting bridge deck or wall.
   h.) Load rating of existing bridge.
2.) Characteristics of the structure location
   a.) Position of adjacent streets and their average daily traffic.
   b.) Structure height above lower terrain or waterway.
   c.) Approach roadway's width, alignment and grade.
   d.) Design speed, posted speed, average daily traffic and percentage of truck traffic.
   e.) Accident history on the structure.
   f.) Traffic control required for initial construction of retrofit and for potential future repairs.
   g.) Locations and characteristics of pedestrian facilities / features (if present).
3.) Features of the retrofit designs
   a.) Placement or spacing of anchor bolts or dowels.
   b.) Reinforcement anchorage and potential conflicts with existing reinforcement, voids, conduits, etc.

c.) Self weight of retrofit railing.
d.) End treatments.
e.) Effects on pedestrian facilities.

D. Evaluation of Existing Supporting Structure Strength for Traffic Railing Retrofits

The Thrie Beam Guardrail and Vertical Face traffic railing retrofits are based on designs that have been successfully crash tested in accordance with ***NCHRP Report 350*** to Test Level 4 or have been previously tested and then accepted at Test Level 4. The original designs have been modified for use with some of the wide variety of traffic railings and supporting deck and wing wall configurations that were historically constructed on Florida bridges. In recognition of the fact that the traffic railings and supporting elements were designed to meet the less demanding requirements of past AASHO and AASHTO Bridge Codes, modifications have been made to the original retrofit designs in order to provide for better distribution of vehicle impact force through the traffic railing retrofit and into the supporting bridge deck or wing wall. For Thrie Beam Guardrail Retrofit installations on narrow curbs and or lightly reinforced decks or walls, a smaller post spacing is used on bridge decks. In addition, through-bolted anchors are used for some Thrie Beam Guardrail Retrofit installations. For the Vertical Face Retrofit, additional longitudinal reinforcing steel and dowel bars at the open joints are used within the new railing.

Existing bridge decks and walls that will support a traffic railing retrofit must be evaluated to determine if sufficient strength is available to ensure that the retrofit will perform in a manner equivalent to that demonstrated by crash testing. Existing structures may contain Grade 33 reinforcing steel if constructed prior to 1952 or Grade 40 reinforcing steel if constructed prior to 1972. Use 90% of the ultimate tensile strength of these materials when determining the existing capacity for both tension and moment from traffic railing impacts (f_s = 49.5 ksi for Grade 33, f_s = 60 ksi for Grade 40). For existing structures containing Grade 60 reinforcing steel, only use the yield strength of this material (f_s = 60 ksi). For bridges with varying spacings and sizes of transverse reinforcing steel in the deck or curb, the average area of transverse steel for the span may be used.

Existing cast-in-place reinforced concrete bridge decks shall be analyzed at a section through the deck at the gutter line for the appropriate FDOT traffic railing retrofit Standard Indexes using the following design values:

Traffic Railing Type	Standard Index No.	M_g	T_u
Thrie-Beam Retrofit	772, 776 & 777	5.8	4.7
Thrie-Beam Retrofit	773 & 775	8.3	6.7
Thrie-Beam Retrofit	774	9.7	7.9
Vertical-Face Retrofit	782-785	12.9	7.5

M_g (kip-ft/ft) - Ultimate deck moment at the gutter line from the traffic railing impact.

T_u (kip/ft) - Total ultimate tensile force to be resisted.
The following relationship must be satisfied at the gutter line:

$$(T_U / \Phi P_n) + (M_u / \Phi M_n) \leq 1.0 \qquad \text{(Eq. 6-1)}$$

Where:

Ø = 1.0

$P_n = A_s f_s$ (kips/ft) - Nominal tensile capacity based on the areas of transverse reinforcing steel in both the top and bottom layers of the deck (**A_s**) and the nominal reinforcing steel strength (**f_s**). This reinforcing steel must be fully developed at the critical section through the deck at the gutter line.

M_u =Total ultimate deck moment from traffic railing impact and factored dead load at the gutter line **(M_g + 1.25*$M_{Dead\ Load}$)** (kip-ft/ft)**.**

M_n = Nominal moment capacity at the gutter line determined by traditional rational methods for reinforced concrete (kip-ft/ft). The bottom layer of steel must not be included unless a strain compatibility analysis is performed to determine the steel stress in this layer with the compressive strain in the concrete limited to 0.003.

Decks constructed of longitudinally prestressed, transversely post-tensioned voided or solid slab units generally only contain minimal transverse reinforcing ties. Retrofitting bridges with this type of deck will not be permitted after January 1, 2010. For these type bridges, the strength checks of the deck at the gutter line will not be required. Only Index No. 776 or Index 780 Series retrofits should be used to retrofit these bridges.

In addition to checking the existing deck capacity at the gutter line, the following minimum areas of reinforcing steel per longitudinal foot of span must also be satisfied unless a more refined analysis is performed to justify a lesser area of steel at these locations:

Minimum Steel Area (in^2/ft) for Standard Index				
Location of Reinforcing Steel	**772,776 & 777**	**773 & 775**	**774**	**780 Series**
Transverse in top of curb beneath post:				
Grade 33 reinforcing	0.32	0.40	0.40	NA
Grade 40 & 60 reinforcing	0.25	0.31	0.31	NA
Vertical in face of curb for thickness "D"				
Grade 33 reinforcing	0.20	2.25/(D-2)**	2.65/(D-2)**	3.30/(D-2)**
Grade 40 & 60 reinforcing	0.20*	1.80/(D-2)**	2.10/(D-2)**	2.60/(D-2)**
* 0.16 sq inches/foot is acceptable for D equal to or greater than 15-inches. ** Minimum area of reinforcing steel must not be less than 0.16 square inches/foot. Where: D (inches) = Horizontal thickness of the curb at the gutter line.				

If the minimum areas of reinforcing in the curb given above are not satisfied, the following design values may be used for a refined analysis of the existing curb beneath the post for the Index 770 Series retrofits:

Traffic Railing Type	**Standard Index No.**	**M_p**	**T_u**
Thrie-Beam Retrofit	Nos. 772, 776 & 777	9.7	7.9
Thrie-Beam Retrofit	Nos. 773, 774 & 775	12.0	9.9

M_p (kip-ft/ft) - Ultimate deck moment in the curb at centerline of post from the traffic railing impact.

T_u (kip/ft) - Total ultimate tensile force to be resisted.

The following relationship must be satisfied in the curb at centerline of post:

$$(T_U / \Phi P_n) + (M_u / \Phi M_n) \leq 1.0 \qquad \text{(Eq 6-2)}$$

Where:

Ø = 1.0

$P_n = A_s f_s$ (kips/ft) - Nominal tensile capacity based on the areas of transverse reinforcing steel in both the top and bottom of the curb (A_s)and the nominal steel strength (f_s). This reinforcing steel must be fully developed at the critical section.

M_u = Total ultimate moment in the curb from traffic railing impact and factored dead load at centerline of post **($M_p + 1.25*M_{Dead\ Load}$)** (kip-ft/ft).

M_n = Nominal moment capacity of the curb at centerline of post determined by traditional rational methods for reinforced concrete (kip-ft/ft). The bottom layer of steel in the curb must not be included unless a strain compatibility analysis is performed to determine the steel stress in this layer with the compressive strain in the concrete limited to 0.003.

The ultimate moment capacity of existing wing walls and retaining walls supporting the traffic railing retrofits must not be less than 9.7 kip-ft/ft for Index 770 Series retrofits (3'-1 ½" maximum post spacing) and 12.0 kip-ft/ft for Index 780 Series retrofits. Wing walls for Index 780 Series retrofits must also be a minimum of 5 feet in length and pile supported. For Index 780 Series retrofits only, wing walls that do not meet these criteria must not be used to anchor the ends of guardrail transitions and must be shielded by continuous guardrail as shown on the ***Structures Standard Drawings***. For both 770 and 780 Series retrofits, retaining walls must be continuous without joints for a minimum length of 10 feet and adequately supported to resist overturning.

An exception will be required for bridges or components of bridges that do not meet the preceding strength requirements. The potential for damage to the existing bridge deck or wing walls due to a very severe crash, such as that modeled by full scale crash testing, may be acceptable in specific cases. Contact the Structures Design Office for additional guidance and assistance in these cases.

6.7.5 Historic Bridges

A. Federal Law protects Historic Bridges and special attention is required for any rehabilitation or improvement of them. The Director of the Division of Historical Resources of the Florida Department of State serves as Florida's State Historic Preservation Officer (SHPO). The SHPO and FDOT are responsible for determining what effect any proposed project will have on a historic bridge. See the ***PPM*** Chapter 26.

B. Bridges that are designated historic or that are listed or eligible to be listed in the National Register of Historic Places present a special railing challenge because the appearance of the bridge may be protected even though the historic railing may not meet current standards. When a project is determined to involve a historically significant bridge, the District should contact the Structures Design Office for assistance with evaluating the existing bridge railings.

C. Original railing on a historic bridge is not likely to meet:
   1.) Current crash test requirements.
   2.) Current standards for railing height (a minimum of 32 inches for Test Level 4) and for combination traffic and pedestrian railings,
   3.) Current standards for combination traffic and pedestrian railings, e.g. a minimum height of 42 inches and the limit on the size of openings in the railing (small enough that a 6 inch diameter sphere cannot pass.)

D. Options for upgrading the railing on historic bridges usually include the following:

1.) Place an approved traffic railing inboard of the existing railing, leaving the existing railing in place. This is sometimes appropriate when a pedestrian walkway exists on or is planned for the bridge.
2.) Replace the existing railing with an approved, acceptable railing of similar appearance.
3.) Remove the current railing and incorporate it into a new acceptable railing. This may be appropriate in rare instances where an existing railing is especially decorative.
4.) Design a special railing to match the appearance of the existing railing. It may not be necessary to crash test the new railing if the geometry and calculated strength equal or exceed a crash tested traffic railing.

6.7.6 Requirements for Test Levels 5 and 6 [13.7.2]

A. Consider providing a traffic railing that meets the requirements of Test Levels 5 or 6 when any of the following conditions exist:
1.) The volume of truck traffic is unusually high.
2.) A vehicle penetrating or overtopping the traffic railing would cause high risk to the public or surrounding facilities.
3.) The alignment is sharply curved with moderate to heavy truck traffic.

B. Contact the SDO for guidance if a Test Level 5 or 6 traffic railing is being considered.

6.7.7 Exceptions

A. In the rare event that an upgrade to the traffic railing on an existing bridge could degrade rather than improve bridge safety, during the early phases of a project consult the Structures Design Office about a possible design exception.

B. Factors to consider include the following:
1.) Remaining time until scheduled replacement or major rehabilitation of structure.
2.) Design speed and operating speed of traffic in the structure location, preferably no greater than 45 mph.
3.) Resistance to impact of the existing railing.
4.) Whether the structure ends are intersections protected by stop signs or traffic signals.
5.) Whether the geometry is straight into, along and out of the structure.
6.) Overall length of the structure.
7.) Whether traffic on the structure is one-way or two-way.
8.) Accident history on the structure, including damages to and repairs of the existing railing.
9.) Risk of fall over the side of the structure.
10.) Whether the bridge has an intersecting roadway or railroad track below.
11.) Whether a railing upgrade will further narrow an already narrow lane, shoulder or sidewalk.
12.) Load rating of the existing bridge.
13.) Special historic or aesthetic concerns.

C. Exceptions to the requirements of this Article must be approved in accordance with Chapter 23 of the ***Plans Preparation Manual***, Volume I.

6.7.8 Sound Barriers

A. Do not attach sound barriers to the top of traffic railings unless the system has been crash tested and meets TL-4 acceptability requirements of ***NCHRP Report 350***.

B. Non-crash tested sound barriers may be attached to structures if located behind an approved traffic railing and mounted at least five feet from the face of the traffic railing at deck level.

C. The Traffic Railing Barrier/Sound wall, Structures Standard Index Nos. 1550, 1560 and 1570 are crash tested and approved for TL-4 use.

Chapter 7 Widening and Rehabilitation

7.1 General

7.1.1 Load Rating

A. Before preparing widening plans, review the inspection report and load rating analysis of the structure. If the inventory load rating (LFD) does not meet or exceed HS-20 loading, perform a more refined analysis to accurately load-rate the structure.

B. If an existing bridge does not load rate to HS-20 then replacement should be considered.

7.1.2 Bridge Deck - See Chapter 4.

7.1.3 Expansion Joints - See Chapter 6.

7.1.4 Traffic Railing - See Chapter 6.

7.2 Classifications and Definitions

7.2.1 Major Widening

A “Major Widening” is new construction work to an existing bridge facility which doubles the total number of traffic lanes or bridge deck area of the existing bridge. The area to be calculated is the transverse coping-to-coping dimension.

7.2.2 Minor Widening

A “Minor Widening” is new construction work to an existing bridge facility that does not meet the criteria of a major widening.

Commentary: The term “facility” describes the total number of structures required to carry a transportation route over an obstruction. In this context, adding two lanes of traffic to one bridge of twin, two-lane bridges would be a minor widening because the total number of lanes of resulting traffic, (six) in the finished “facility” is not twice the sum number of lanes of traffic, (four), of the unwidened, existing twin bridges.

7.3 Analysis and Design

7.3.1 Aesthetics

A. Design widenings to match the aesthetic level of the existing bridge.

B. Additions to existing bridges should not be obvious “add ons.”

C. Consider specifying a Class 5 Finish coating for the existing bridge.

7.3.2 Materials

Materials used in the construction of the widening should have the same thermal and elastic properties as those of the existing structure.

7.3.3 Load Distribution

A. Proportion the main load carrying members of the widening to provide longitudinal and transverse load distribution characteristics similar to the existing structure.
Commentary: Normally, this can be achieved by using the same cross-sections and member lengths as were used in the existing structure.

B. When determining the distribution of the dead load for the design of the widening, and when performing stress checks of the existing structure, consider the construction sequence and degree of interaction between the widening and the existing structure after completion. Use ***LRFD*** criteria for the distribution of live load.

7.3.4 Specifications

A. Design all widenings in accordance with ***LRFD***.

B. Review stresses in the main exterior member of the existing structure for construction conditions and the final condition; i.e., after attachment of the widened portion of the structure. When computations indicate overstresses in the exterior member of the existing structure, request a variation from the appropriate FDOT Structures Design Office.

7.3.5 Overlays

Asphalt overlays on bridge decks should be removed.

7.3.6 Substructure

As with any bridge structure, when selecting the foundation type for a widening, consider the recommendations of both the District Geotechnical Engineer and the District Drainage Engineer.

7.3.7 Other Special Considerations

A. When detailing connections and selecting or permitting construction methods, consider the amount of differential camber present prior to placing the new deck.

B. Avoid open or sealed longitudinal joints in the riding surface (safety hazards.)

C. Specify that live load vibrations from the existing structure be minimized or eliminated during deck pour and curing.

D. Refer to ***SDG*** Chapter 6 for bearing requirements.

E. Provide ample clearance between proposed driven piles and existing piles, utilities, or other obstructions. This is especially critical for battered piles.

F. Bearing fixity and expansion devices should be the same in both the widened and existing bridges.

7.4 Attachment to Existing Structure

7.4.1 Drilling

A. When drilling into heavily reinforced areas, specify exposure of the main reinforcing bars by chipping.

B. Specify that drilled holes have a minimum edge distance of three times the metal anchor diameter (3d) from free edges of concrete and 1-inch minimum clearance between the edges of the drilled holes and existing reinforcing bars.

C. Specify core drilling for holes with diameters larger than 1½-inches or when necessary to drill through reinforcing bars.

D. Adhesive Anchor Systems must be SDO approved and comply with the criteria and requirements of Chapter 1.

7.4.2 Dowel Embedments

Ensure that reinforcing bar dowel embedments meet minimum development length requirements whenever possible. If this is not possible (e.g., traffic railing dowels into the existing slab), the following options are available:

A. Reduce the allowable stresses in the reinforcing steel by the ratio of the actual embedment divided by the required embedment.

B. If embedded anchors used to develop the reinforcing steel, use Adhesive Anchor Systems designed in accordance with Chapter 1.

7.4.3 Surface Preparation

Specify that surfaces be prepared for concreting in accordance with "Removal of Existing Structures" in Sections 110 and 400 of the FDOT's ***Standard Specifications for Road and Bridge Construction***.

7.4.4 Connection Details

A. Figures 7-1 through 7-4 are details that have been used successfully for bridge widenings for the following types of bridge superstructures.

B. Flat Slab Bridges (Figure 7-1): A portion of the existing slab should be removed in order to expose the existing transverse reinforcing for splicing. If the existing reinforcing steel cannot be exposed, the transverse slab reinforcing steel for the widening may be doweled directly into the existing bridge without meeting the normal splice requirement. When splicing to the existing steel is not practical, Adhesive Anchor Systems, designed in accordance with Chapter 1, must be utilized for the slab connection details as shown in Figures 7-1 and 7-4

C. T-Beam Bridges (Figure 7-2): The connection shown in Figure 7-2 for the slab connection is recommended. Limits of slab removal are at the discretion of the EOR but subject to the Department's approval.

D. Steel and Concrete Girder Bridges (Figure 7-3): The detail shown in Figure 7-3 for the slab connection is recommended for either prestressed concrete or steel beam superstructures.

Commentary: These figures are for general information and are not intended to restrict the EOR in his judgment.

Figure 7-1

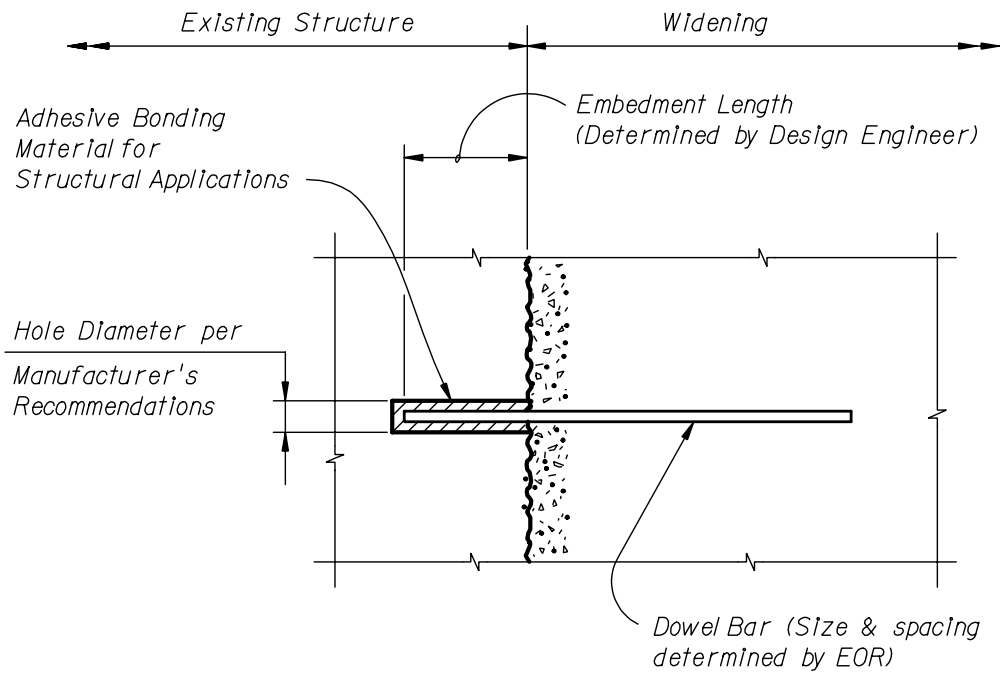

NOTES:

1. *Verify that holes for Dowel Bars are thoroughly clean and dry prior to placing bonding material.*
2. *Comply with Sections 416 & 937 of the Specifications.*
3. *Shift dowel hole locations if existing reinforcing steel is encountered.*

WIDENING DETAIL SHOWING DOWEL INSTALLATION

Figure 7-2 Flat Slab

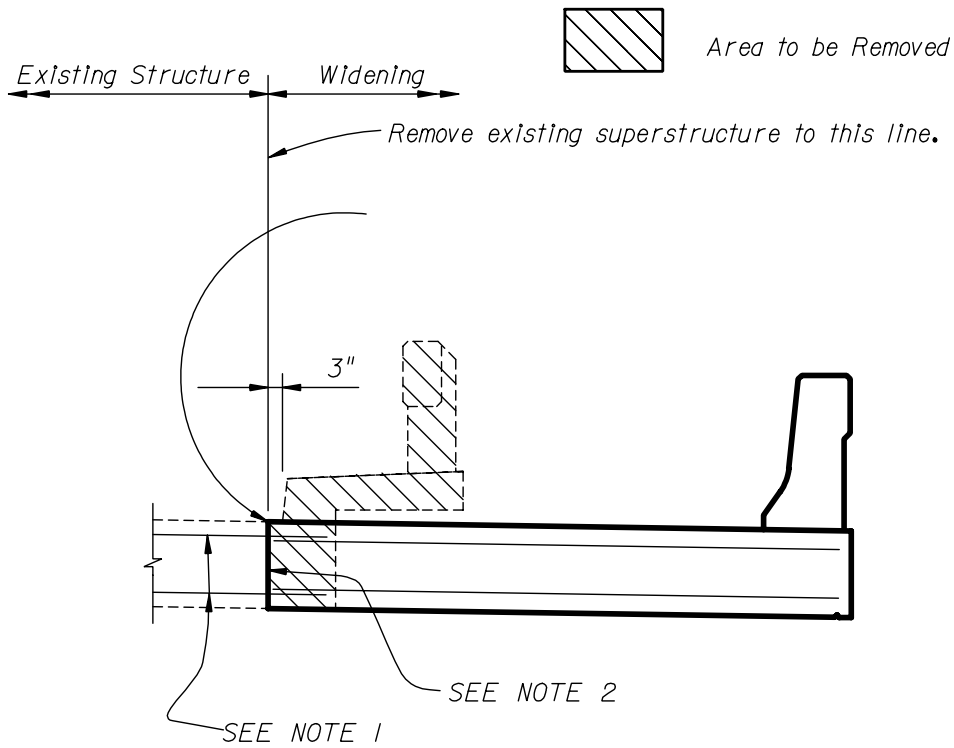

NOTES:

1. Existing transverse reinforcing to remain in place. Clean bars, straighten and embed into the slab widening. If bars are broken or otherwise determined to be unsatisfactory by the Engineer, replace with dowel bars as shown in Figure 7-1.
2. Clean all contacting surfaces between the old and new concrete immediately before casting concrete.
3. Score concrete for full length of span by sawing to top of reinforcing Avoid damaging reinforcing steel during sawing operation and slab removal.

WIDENING DETAIL FOR FLAT SLAB SUPERSTRUCTURE

Figure 7-3 Monolithic Beam and Slab

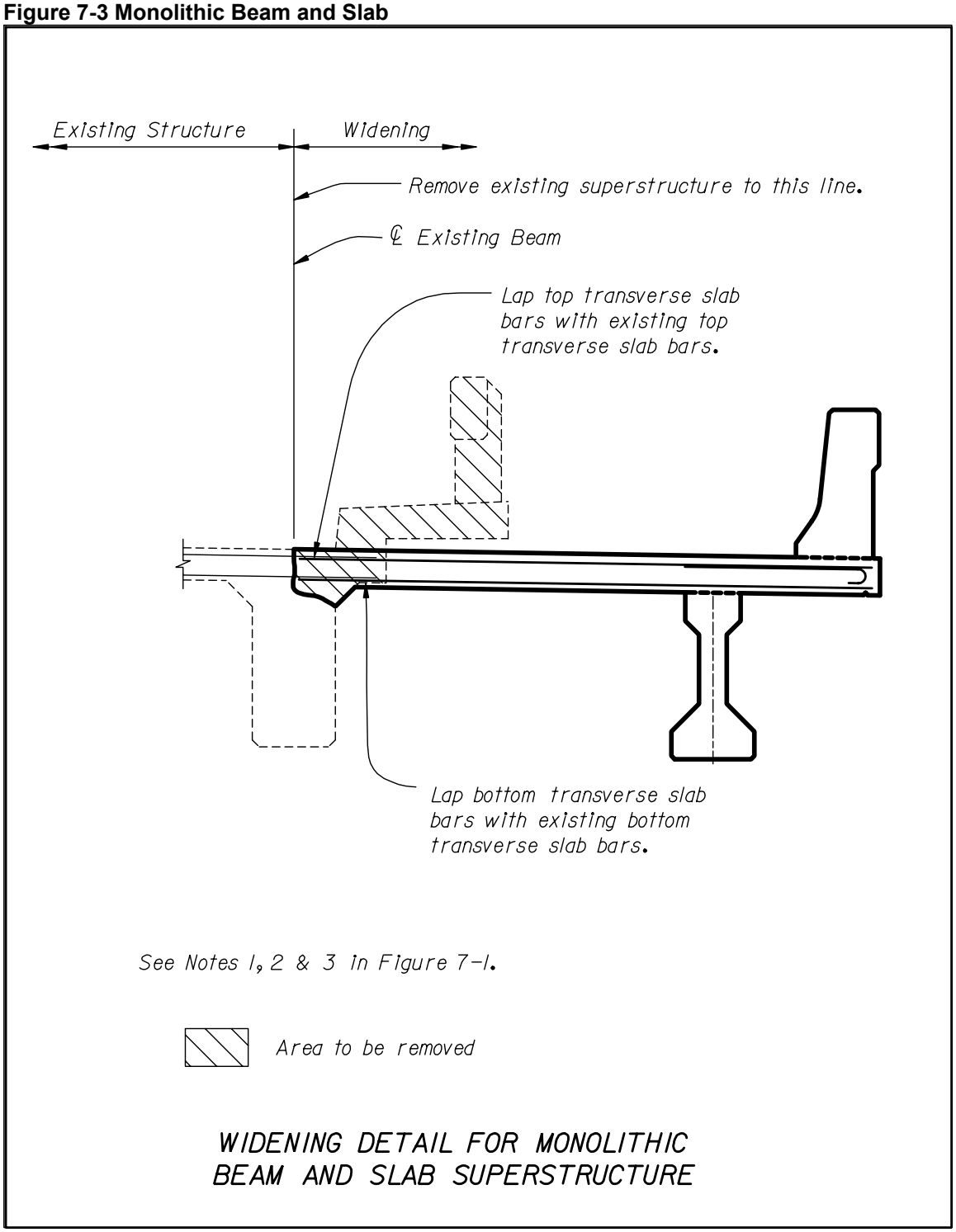

Figure 7-4 Widening AASHTO Beam

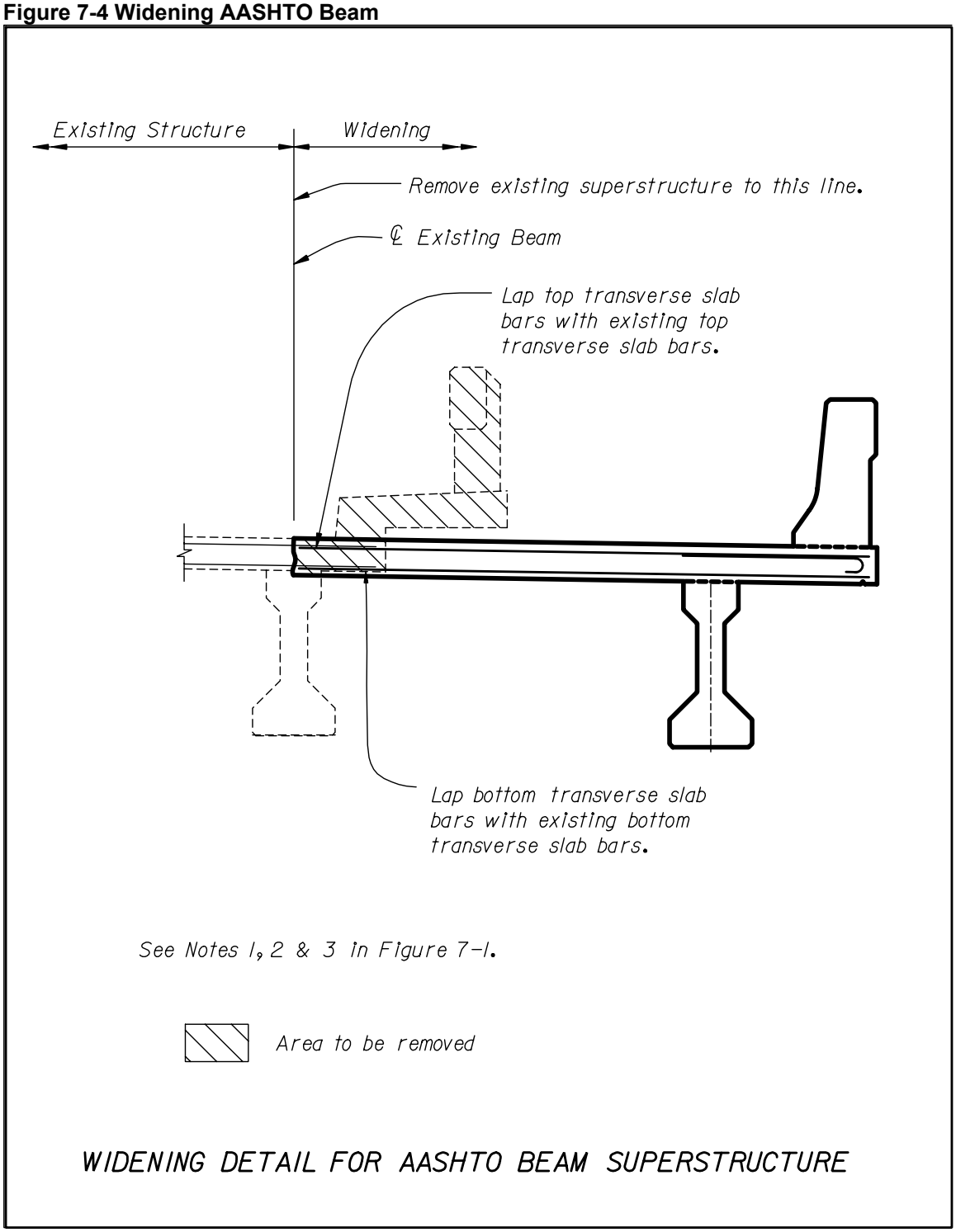

7.5 Construction Sequence

A. Show on the preliminary plans, a construction sequence which takes into account the Traffic Control requirements.

B. Submit Traffic Control Plans for traffic needs during construction activities on the existing structure such as installation of new joints, deck grooving, etc.

C. Include in the final plans, a complete outline of the order of construction along with the approved Traffic Control Plans. Include details for performing any necessary repairs to the existing bridge.

7.6 Widening Rules

A. In order to minimize changing the characteristics of the deck slab supports and/or unduly affecting maintenance and aesthetics, during the preparation of widening plans, adhere to the following criteria:

1.) The widened portion of a minor widening must match the existing structure. Refer to Chapter 4 for deck slab design.
2.) Avoid mixing concrete and steel beams in the same span.
3.) The use of beams of the same type as those in the existing structure is preferred; however, if the existing beams are cast-in-place concrete, detail the widened deck supported on prestressed beams.
4.) Provide the required vertical clearance on Interstate structures unless an exception is granted. To assist in meeting the minimum vertical clearance requirements on a widening, the standard beam depth may be decreased. Where the existing bridge does not satisfy current vertical clearance requirements and where the economics of doing so are justified, the superstructure must be elevated and/or the under passing roadway must be lowered as part of the widening project.

Commentary: The stated clearance criteria are particularly important for bridges that have a history of frequent superstructure collisions from over-height vehicles.

B. The transverse reinforcement in the new deck should be spaced to match the existing spacing. Different bar sizes may be used if necessary.

C. Voided-slab bridges require special attention. Contact the DSDE for guidance. The DSDE will coordinate with the SDO to establish recommendations and criteria for the widening of the particular structure.

D. For all widenings, confirm that the available existing bridge plans depict the actual field conditions. Notify FDOT's Project Manager of any discrepancies which are critical to the continuation of the widening design.

Commentary: In general, confirming the agreement of existing plans with actual field conditions should be included as part of any new survey. A structural engineer must be involved in checking that the existing plans agree with actual field conditions for items such as:
Bridge location, pier location, skew angle, stationing.
Span lengths.
Number and type of beams.
Wing wall, pier, and abutment details.
Utilities supported on the bridge.
Finished grade elevations.
Vertical and horizontal clearances.
Other features critical to the widening.

7.7 Deck Grooving

A. For widened superstructures where at least one traffic lane is to be added, specify grooving for the entire deck area.

B. For projects with shoulder widening only, add a note to the plans specifying that the bridge floor finish match that of the existing bridge deck surface. However, if the existing bridge deck surface is in poor condition, contact the DSDO for direction.

C. Contact the SDO for guidance for the required bridge surface finish for unusual situations or for bridge deck surface conditions not covered above.

D. For all new construction utilizing C-I-P bridge deck (floors) that will not be surfaced with asphaltic concrete, include the following item in the Summary of Pay Items:

Item No. 400-7 - Bridge Floor Grooving Sq. Yards

E. Quantity Determination: Determine the quantity of bridge floor grooving in accordance with the provisions of Article 400-22.3 of the “Specifications.”

7.7.1 Penetrant Sealers

A. Specify penetrant sealers after grooving existing bridge decks with the following conditions:
   1.) The existing bridge deck does not conform to the current reinforcing steel cover requirement.
   2.) The superstructure environment is Extremely Aggressive due to the presence of chlorides.
   3.) The existing deck is to be grooved.

B. Do not specify penetrant sealers for new bridge structures or if the existing deck is not to be grooved.

Chapter 8 Movable Bridges

8.1 General

This chapter contains information and criteria related to the design of movable bridge projects. It sets forth the basic Florida Department of Transportation (FDOT) design criteria that are exceptions or additions to those specified in the AASHTO ***LRFD-Movable Highway Bridge Design Specifications***, First Edition, 2000 and any interim releases thereafter and herein referred to as ***LRFD-MHB*** Specifications, except English (use soft conversions to convert to English units). Where applicable, other sections of this **SDG** also apply to the design of movable bridges.

8.1.1 Applicability

A. The design criteria of this chapter are applicable for new bridges and the electrical/machinery design for rehabilitation of existing bridges. The requirements for structural rehabilitation will be determined on a bridge-by-bridge basis, based on evaluations during the BDR phase and approval by the Structures Design Office (SDO). Projects for which the criteria are applicable will result in designs that preferably, provide new bascule bridges with a "two leafs per span" configuration.
Commentary: Single leaf bascules are discouraged, but may be considered for small channel openings where navigational and vehicular traffic is low. Assure reliable operation of movable bridges through redundancy features in drive and control systems, for both new and rehabilitation projects.

B. Examine and evaluate alternative bridge configurations offering favorable life cycle cost benefits. Consider improved design or operational characteristics providing advantage to the traveling public. Incorporate design and operational features which are constructible and which can be operated and maintained by the Department's forces. Maintain consistency of configuration, when feasible, for movable bridges throughout the State.

8.1.2 Redundancy

A. Include recommendations for redundant drives and control systems in the BDR/30% plans submittal. For bridges having low rates of anticipated bridge openings or average daily traffic, application of redundant drive and control systems may not be cost effective. In this event, submit such information in the BDR and provide appropriate recommendations for omission of redundant systems.
Commentary: Redundant drive configurations include:
1.) Hydraulic drive systems operated by multiple hydraulic cylinders. In these systems, a pump drive motor or its hydraulic pump can be isolated and bridge operations can continue while repairs are accomplished.
2.) Gear driven systems that may be driven through one gear train into a single rack of a two-rack bridge.

B. Provide two rack drives actuated by dual motor drive systems either of which will be capable of operating the bridge leaf. Normal operation of this configuration will involve operation of one drive/motor system. Provide an alternator to alternate drives/motors for each opening.

C. Design hydraulic cylinder actuated movable bridges to function in spite of loss of a main pump motor, hydraulic pump, or drive cylinder.

D. Design the system to include all necessary valves, piping, etc., to permit safe and expeditious changeover to the redundant mode. Specify a permanent plaque displayed in a convenient location on the machinery platform describing actions (valve closures and openings, electrical device deactivation, etc.) necessary for operation in the redundant mode.

E. When operating with either a single rack drive functioning or unsymmetrical hydraulic cylinder forces applied to the leaf, design the structure for Movable Bridge - Specific load combinations, strength BV-I and BV-II. Reduce the load factors for strength BV-I to 1.35 [Table 2.4.2.3-1].

8.1.3 Trunnion Support Systems

Provide trunnion support systems as follows:

A. Simple, rotating trunnion configuration, with bearing supports, on towers, on both inboard and outboard sides of the trunnion girder.

B. Sleeve bearings should be considered for only small bascule bridges and must be approved by the SDO at the BDR phase. Design constraints and cost justification must be provided.

C. Design trunnion supports on each side of the main girder with similar stiffness vertically and horizontally.

8.1.4 Vertical Clearance Requirements

Design bascule leaf for unlimited vertical clearance between the fenders in the full open position. Any encroachment of the leaf into the horizontal clearance zone must receive favorable Coast Guard review prior to approval of the BDR.

8.1.5 Horizontal Clearance Requirements

Design all movable bridges over navigable waterways to provide an appropriate horizontal clearance up to 110 feet between fenders. Horizontal clearances over 110 ft. must be approved by the State Structures Design Engineer. In addition, bridge clearances shall continue to meet the requirements of the US Coast Guard and Army Corps of Engineers.

8.1.6 Tender Parking

Provide two parking spaces for bridge tenders in all new bridge designs, preferably on the tender house side of the bridge.

8.1.7 Definitions and Terms

A. Auxiliary Drive: Hand crank, gearmotor with disconnect-type coupling, portable hydraulic pump, drill, etc., that can be used to lower leaf(s) for vehicular traffic or raise the leaf(s) for marine traffic if the main drives fail.

B. Creep Speed: Not more than 10% of full speed, final creep speed will be determined by bridge conditions.

C. Emergency Stop: Leaf stops within (3±1) seconds of depressing the EMERGENCY STOP push-button or in the event of a power failure. All other rotating machinery stops instantly.

D. End-of-Travel Function: Contact connection where a closed contact allows operation and an open contact stops operation (i.e., leaf limit switches).

E. Fully Seated: Leaf is at rest on live load shoes, interlock OK to drive span locks.

F. Fully Open: Tip of leaf clears fender of a vertical line as defined by Coast Guard.

G. Hard Open: Leaf opening such that counterweight bumper blocks come in contact with pier bumper blocks.

H. Indicating Function: Contact connection where a closed contact indicates operation and an open contact indicates no operation (i.e., indicating lights.)

I. Interlocks or Safety Interlocks: Ensure events occur in sequence and no out-of-sequence events can occur.

J. Mid-Cycle Stop: Leaf(s) stop following normal ramping after depressing the STOP push-button when in the middle of an opening or closing cycle.

K. Near Closed: A point 8 to 10 degrees (approximately, final position to be field determined) before FULL CLOSED, drive to creep speed.

L. Near Open: A point 8 to 10 degrees (approximately, final position to be field determined) before FULL OPEN, drive to creep speed.

M. Ramp: Rate of acceleration or deceleration of leaf drive.

8.1.8 Movable Bridge Terminology

See Figure 8-2 for standard bridge terminology.

8.2 Construction Specifications and Design Calculations

A. Use the FDOT's Standard Specifications for Road and Bridge Construction and the "Technical Special Provisions" issued by the Mechanical/Electrical Section of the SDO. Additional specifications may be required.

B. Provide detailed calculations to justify all equipment and systems proposed.

C. Submit calculations in an 8½-inch x 11-inch binder.

8.3 Special Strength Load Combination [2.4.2.2]

Evaluate the following owner-specified special design vehicle for Strength II Load Combination of the LRFD Specification as follows: Apply the full HL-93 loading to the design of the cantilever girders for bascule bridges, assuming the span locks are not engaged to transmit live load to the opposite leaf.

8.4 Speed Control for Leaf-driving Motors

A. Design a drive system that is capable of operating the leaf in no more than 70 seconds (See Figure 8-1) under normal conditions.

B. Clearly indicate on the plans the following required torques:

1.) T_A - the maximum torque required to accelerate the leaf to meet the required time of operation.
2.) T_S - the maximum torque required for starting the leaf.
3.) T_{CV} - the maximum torque required for constant velocity.

8.4.1 Requirements for Mechanical Drive Systems

A. Specify a drive capable of developing the torques stated above and operating the leaf (at full speed) in the 70 seconds time limit stated above.

B. Compute the acceleration torque for the inertia and the loading specified for the maximum constant velocity torque [5.4.2]. In addition the drive must be capable of holding the leaf (zero speed) for the required maximum staring torque [5.4.2].

8.4.2 Requirements for Hydraulic Drive Systems

A. Design a drive capable of developing the acceleration torque required for the inertia and the loading specified for the maximum constant velocity torque [5.4.2] and operating the leaf at full speed in the 70 seconds time limit stated above.

B. Longer operating times are allowed for operation under abnormal conditions. Do not exceed 130 seconds under any condition.

8.5 Machinery Systems

8.5.1 Trunnions and Trunnion Bearings

A. Trunnions:

1.) Provide all shoulders with fillets of appropriate radius. Provide suitable provisions for expansion between shoulders and bearings.
2.) For keys and keyways see 6.7.8 and 6.7.10 of the AASHTO Specification.
3.) Do not use keyways between the trunnion and the trunnion hub/collar.
4.) For trunnions over 8-inch diameter, provide a hole 1/5 the trunnion diameter lengthwise through the center of the trunnion. Extend the trunnion at least 5/8-inch beyond the end of the trunnion bearings. Provide a 2-inch long counter bore concentric with the trunnion journals at each of the hollow trunnion ends.
5.) In addition to the shrink fit, drill dowels of appropriate size through the hub into the trunnion after the trunnion is in place.
6.) When anti-friction roller bearings are used, the surface finish must be compatible with the bearing manufacturer's requirements. Deflections of the trunnion with load must be calculated and compared with these clearances to insure the journals do not bottom out

and bind, particularly on rehabilitations and Hopkins frame bridges. Clearances may have to be adjusted.

7.) For rehabilitation of existing Hopkins trunnions, verify that trunnion eccentrics have capability for adjustment to accommodate required changes in trunnion alignment. If not, provide repair recommendations.

8.) If Hopkins trunnions are used, design three-piece eccentric assembly.

B. Hubs and Rings:

1.) Provide hubs and Rings with a mechanical shrink fit.

2.) See Figure 8-3, for minimum requirements.

8.5.2 Racks and Girders

Detail a mechanical, bolted connection between the rack and girder. Specify a machined finish for the connecting surfaces.

8.5.3 Span Balance [1.5]

A. New Construction:

1.) Design new bascule bridges such that the center of gravity may be adjusted vertically and horizontally.

2.) Design mechanical drive system bridges such that the center of gravity is forward (leaf heavy) of the trunnion or located at an angle (α) 30° to 50° above a horizontal line passing through the center of trunnion with the leaf in the down position. This will result in the leaf being tail (counterweight) heavy in the fully open position and leaf heavy in the fully closed position.

3.) Design hydraulic drive systems bridges such that the center of gravity is forward (leaf heavy) of the trunnion throughout the operating (opening) angle.

4.) Design both single and double leaf bascule for a leaf heavy out of balance condition which will produce an equivalent leaf reaction of 2 kips minimum) when the leaf is down. Design the live load shoe to resist this equivalent leaf reaction.

B. Rehabilitation Projects: Apply the above provisions for bridge rehabilitations in which the leaf balance must be adjusted. Include detailed leaf balance adjustment plans, including the location and weight of any ballast to be furnished and installed to achieve an acceptable balance condition.

C. Design Unbalance: For new and rehabilitated bridges, state the design unbalance in the plans using "**W", "L"** and *"α"*.

Where: α = angle of inclination of the center of gravity above a horizontal line through the trunnion when the leaf is closed. **W** = total weight of the leaf. L = distance from the trunnion axis to the leaf center of gravity.

8.5.4 Speed Reducers

A. Specify and detail speed reducers to meet the requirements of the latest edition of ANSI/AGMA 6010 Standard for Spur, Helical, Herringbone, and Bevel Enclosed Drives. Specify and detail gearing to conform to AGMA Quality No. 8 or higher using following factors:

1.) Service Factor of 1.0 or higher indicating “Actual Input” and “Output Torque” requirements.

2.) C_m and K_m = per the current AGMA 6010 Standard.

3.) C_α and K_α = 1.0

4.) **CL**and **KL**1.0

5.) **Cr** and **Kr** = 1.0

B. A reverse bending factor of 0.8 is required in the strength rating (not required for vertical lift drives).

C. Allowable contact stress numbers, "Sac," must conform to the current AGMA 6010 Standard for through hardened and for casehardened gears.

D. Allowable bending stress numbers, "Sat," must conform to the current AGMA 6010 Standard for through-hardened and for case-hardened gears.

Commentary: These allowable contact and bending stress numbers are for AGMA Grade 1 materials. Grade 2 allowables are permitted only with an approved verification procedure and a sample inspection as required per Mechanical/Electrical Section of the SDO instructions.

E. All speed reducers on a bridge should be models from one manufacturer unless otherwise approved by the Mechanical/Electrical Section of the SDO. Include gear ratios, dimensions, construction details, and AGMA ratings on the Drawings.

F. Provide a reducer capable of withstanding an overload torque of 300% of full-load motor torque. This torque must be greater than the maximum holding torque for the span under the maximum brake-loading conditions.

G. Specify gears with spur, helical, or herringbone teeth. Bearings must be anti-friction type and must have a L-10 life of 40,000 hours as defined in AASHTO, except where rehabilitation of existing boxes requires sleeve-type bearings. Housings must be welded steel plate or steel castings. The inside of the housings must be sandblast-cleaned prior to assembly, completely flushed, and be protected from rusting. Specify exact ratios.

H. Specify units with means for filling and completely draining the case, that have an inspection cover to permit viewing of all gearing (except the differential gears, if impractical), and both a dipstick and sight glass to show the oil level. Sight glasses must be of rugged construction and protected against breakage. Specify drains with shutoff valves to minimize spillage. Furnish each unit with a moisture trap breather of the desiccant type with color indicator to show desiccant moisture state.

I. Specify splash lubrication on the gears and bearings, unless otherwise required by the gear manufacturer. Do not specify pressurized lubrication systems on speed reducer boxes unless approved in writing by the Mechanical/Electrical Section of the SDO. Provide remote indication of pressurized lubrication system malfunction.

Commentary: If a pressurized lubrication system is specified for the reducer, a redundant lubrication system must also be specified. The redundant system must operate at all times when the primary system is functioning.

8.5.5 Open Gearing

Limit the use of open gearing. When used, design open gearing per AGMA specifications. Design and specify guards for high-speed gearing.

8.5.6 Span Locks [6.8.1.5.1]

A. General:

1.) Design span locks attached to the main bascule girders, if possible, giving consideration to maintenance access.
2.) Specify a 4-inch x 6-inch minimum rectangular lock bars, unless analysis shows need for a larger size. Submit design calculations and the selection criteria for review and approval.
3.) Install the bar in the guides and receivers with bronze wear fittings top and bottom, properly guided and shimmed. Provide lubrication at the sliding surfaces. Both the front and rear guides are to have a “U” shaped wear-plate that restrains the bar sideways as well as vertically. The receiver is to have a flat wear-plate to give freedom horizontally to easily insert the lock-bar in the opposite span. The total vertical clearance between the bar and the wear-shoes must be 0.010-inch to 0.025-inch. Specify the total horizontal clearance on the guides to be 1/16-inch ±1/32-inch.
4.) Provide adequate stiffening behind the web for support of guides and receivers.
5.) Mount guides and receivers with ½-inch minimum shims for adjusting. Slot wear-plate shims for insertion and removal.
6.) Provide lubrication fittings at that are convenient for routine maintenance.
7.) Mount actuation elements on the lock to activate limit switches to control each end of the stroke. Incorporate a means to adjust the limit switch actuation. Taper the receiver end of the lock-bar to facilitate insertion into the receivers of the opposite span.
8.) Connection of the lock-bar to the hydraulic cylinder must allow for the continual vibration due to traffic on the leaf. This may be accomplished by providing self-aligning rod-end couplers or cylinders with elongated pinholes on male clevises.

9.) The hydraulic fluid system is to be a reversing motor-driven pump and piping system connected to the cylinder. Specify relief valves to prevent over pressure should the lock-bar jam. Specify pilot operated check valves in the lines to the cylinder to lock the cylinder piston in place when pressure is removed. Provide a hydraulic hand pump and quick-disconnect fittings on the piping to allow pulling or driving of the lock-bar on loss of power. Specify the time of driving or pulling the bar at 5 to 9 seconds.

10.) Design and specify access platforms with access hatches located out of the travel lanes.

B. Lock Design Standards:

1.) The empirical formula, Equation 8-1 listed below, can be used to determine double leaf bascule lock loads with acceptable results; however, more exact elastic analysis can be used if the solution thus obtained is not accurate enough.

$$S = \frac{P}{4}\left(\frac{A}{L}\right)^2\left(3 - \frac{A}{L}\right) \qquad \text{Eq. 8-1}$$

S = Shear in lock in kips for a given load on the span, "**P**."

A = Distance in feet from the support to the given load, "**P.**"

L = Distance in feet from the support to the center lock.

See Figure 8-4 for diagrammatic sketch of "***S,*** ***"A,"*** and ***"L***."

Double the Dynamic Load Allowance (IM) to 66% for lock design.

2.) Use a Dynamic Load Allowance of 100% for Lock Design on a double-leaf bascule span expected to carry traffic with ADTT (Average Daily Truck Traffic) > 2500.

8.5.7 Brakes

A. Use thrustor type brakes.

B. Provide a machinery brake and a motor brake. Submit calculations justifying the brake torque requirements. Show brake torque requirements on plans.

C. Carefully consider machinery layout when locating brakes. Avoid layouts that require removal of multiple pieces of equipment for maintenance of individual components.

8.5.8 Couplings

Submit calculations and manufacturer's literature for coupling sizes specified. Provide coupling schedule on plans.

8.5.9 Clutches

Rate clutches for emergency drive engagement for the maximum emergency drive torque. The engaging mechanism must be positive in action and must be designed to remain engaged or disengaged while rotating at normal operating speed. Provisions must be made so that the main operating drive is fully electrically disengaged when the clutch is engaged.

8.5.10 Bearings (Sleeve and Anti-Friction)

A. Sleeve Bearings must be grease-lubricated bronze bushings 8-inches in diameter or less and must have grease grooves cut in a spiral pattern for the full length of the bearings.

B. Anti-Friction Bearing pillow block and flange-mounted roller bearings must be adaptor mounting, self-aligning, expansion and/or non-expansion types.

1.) Specify cast steel housings capable of withstanding the design radial load in any direction, including uplift. The same supplier as the bearing must furnish housing.

2.) Specify bases cast without mounting holes so that at the time of assembly with the supporting steel work, mounting holes are site "drilled-to-fit."

3.) Specify that seals must retain the lubricant and exclude water and debris.

4.) Specify high-strength steel cap bolts on pillow blocks. The cap and cap bolts must be capable of resisting the rated bearing load as an uplift force. Where clearance or slotted holes are used, the clearance space must be filled with a non-shrink grout after alignment to insure satisfactory side load performance.

8.5.11 Anchors

A. For machinery supports anchored to concrete, design for the maximum forces generated in starting or stopping the leaf plus 100% impact. Design hydraulic cylinder supports for 150% of the relief valve setting or the maximum operating loads plus 100% impact, whichever is greater. Detail machinery supports anchored to the concrete by preloaded anchors such that no tension occurs at the interface of the steel and concrete under any load conditions.

B. Mechanical devices used as anchors must be capable of developing the strength of reinforcement without damage to the concrete. All concrete anchors must be undercut bearing, expansion-type anchors. The anchorage must be developed by expanding an anchor sleeve into a conical undercut so as to eliminate direct lateral stresses found in the setting of conventional anchors. The expansion anchors must meet the ductile failure criteria of American Concrete Institute (ACI) Standard 349, Appendix B. Design an expansion anchoring system that can develop the tensile capacity of the bolt without slip or concrete failure. The bolt must consistently develop the minimum specified strength of the bolting material to provide a favorable plastic stretch over the length of the bolt prior to causing high-energy failure. Require pullout testing of anchors deemed to be critical to the safe operation of the bridge machinery system. Pullout verification tests must be performed at not less than 200% of maximum operational force levels.

C. Design the conical undercut and the nut to transfer the bolt tension load into direct bearing stress between the conical nut and expansion sleeve and the expansion sleeve and conical concrete surface. The depth and diameter of the embedment must be sufficient to assure steel failure, with concrete cone shear strength greater than the strength of the bolting material.

D. Anchor Bolt Design:

1.) Design anchor bolts subject to tension at 200% of the allowable basic stress and shown, by tests, to be capable of developing the strength of the bolt material without damage to concrete.

2.) The design strength of embedment is based on the following maximum steel stresses:

a.) Tension, $\mathbf{fs_{max} = 0.9fy}$

b). Compression and Bending, $\mathbf{fs_{max} = 0.9fy}$

c). Shear, $\mathbf{fs_{max} = 0.55fy}$ (shear-friction provisions of ACI, Section 11.7, must apply)

d). The permissible design strength for the expansion anchor steel is reduced to 90% of the values for embedment steel.

e). For bolts and studs, the area of steel required for tension and shear based on the embedment criteria must be considered additive.

f). Calculate the design pullout strength of concrete, $\mathbf{P_c}$, in pounds, as:

$$P_c = 3.96\phi\sqrt{f'_c}A$$

Where:

Ø = Capacity reduction factor, 0.65

A = Projected effective area of the failure cone, in²

$\mathbf{f'_c}$ = Specified compressive strength of concrete, psi

g.) Steel strength controls when the design pullout strength of the concrete, $\mathbf{P_c}$, exceeds the minimum ultimate tensile strength of the bolt material.

h.) The effective stress area is defined by the projected area of the stress cone radiating toward the concrete surface from the innermost expansion contact surface between the expansion anchor and the drilled hole.

i.) The effective area must be limited by overlapping stress cones, by the intersection of the cones with concrete surfaces, by the bearing area of anchor heads, and by the overall thickness of the concrete. The design pullout strength of concrete must be equal to or greater than the minimum specified tensile strength (or average tensile strength if the minimum is not defined) for the bolting material.

8.5.12 Fasteners

A. All bolts for connecting machinery parts to each other and to supporting members must be as shown on the plans or specified otherwise and conform to one of the following types:
   1.) High-strength bolts.
   2.) Turned bolts, turned cap screws, and turned studs.
   3.) High-strength turned bolts, turned cap screws, and turned studs.

B. High strength bolts must meet the requirements of ASTM A325. High strength bolts must have regular hexagonal heads. Holes for high-strength bolts must be no more than 0.010-inch [0.25 mm] larger than the actual diameter of individual bolts and drilling holes to match the tolerances for each bolt. The clearance must be checked with 0.011-inch [0.28 mm] wire. The hole must be considered too large if the wire can be inserted in the hole together with the bolt. Install, wherever possible, high-strength bolts connecting machinery components to structural elements or to other machinery components comprised of different thicknesses such that the bolt head is adjacent to the connected element with the least thickness.

C. Turned bolts, turned cap screws, and turned studs must have turned shanks and cut threads. Turned bolts must have semi-finished, washer-faced, hexagonal heads and nuts. All finished shanks of turned fasteners must be 0.06 -inch [1.6 mm] larger in diameter than the diameter of the thread, which must determine the head and nut dimensions.

D. Drill or ream-assemble all elements connected by bolts to assure accurate alignment of the hole and accurate clearance over the entire length of the bolt within the specified limits.

E. Provide bolt heads, nuts, castle nuts, and hexagonal head cap screws dimensioned in accordance with ANSI Standard B18.2.3, Hexagon Bolts and ANSI Standard B18.2.4.6 Nuts.

F. Provide heavy series heads and nuts for turned bolts, screws, and studs.

G. ASTM A325 bolts must have regular hex heads.

H. The dimensions of socket-head cap screws, socket flathead cap screws, and socket-set screws must conform to ANSI Standard B18.3.1. Provide screws made of heat-treated alloy steel, cadmium-plated, and furnished with a self-locking nylon pellet embedded in the threaded section. Unless otherwise called for on the plans or specified herein, provide setscrews of the headless safety type with threads of coarse thread series and cup points. Do not use setscrews to transmit torsion nor as the fastening or stop for any equipment that contributes to the stability or operation of the bridge.

I. Threads for cap screws must conform to the coarse thread series and must have a Class 6g tolerance. For bolts and nuts, the bolt must conform to the coarse thread series and must have a Class 6g tolerance. The nut must have a Class 6H in accordance with the ANSI Standard B18.2.6 Screw Threads [ANSI Standard B18.2.6M Metric Screw Threads].

J. Spot face bolt holes through unfinished surfaces. Insure the head and nut are square with the axis of the hole.

K. Unless otherwise called for, sub drill all bolt holes in machinery parts or connecting these parts to the supporting steel work at least 0.03-inch [0.80 mm] smaller in diameter than the bolt diameter. Ream for the proper fit at assembly or at erection with the steel work after the parts are correctly assembled and aligned.

L. Ream or drill holes in shims and fills for machinery parts to the same tolerances as the connected parts at final assembly.

M. Furnish positive locks of an approved type for all nuts except those on ASTM A325 Bolts. If double nuts are used, they must be used for all connections requiring occasional opening or adjustment. Provide lock washers made of tempered steel if used for securing.

N. Install high-Strength bolts with a hardened plain washer meeting ASTM F436 at each end.

O. Wherever possible, insert high strength bolts connecting machinery parts to structural parts or other machinery parts through the thinner element into the thicker element.

P. Provide cotters that conform to SAE standard dimensions and are made of half-round stainless steel wire, ASTM A276, Type 316.

Q. Anchor bolts connecting machinery parts to masonry must be ASTM A325 material, hot-dipped galvanized per ASTM A153 unless otherwise approved by the Engineer. Show bolts on the masonry drawings. Anchor bolts for new construction must be cast in place and not drilled. The material and loading requirements must be as shown on the plans. The filler material may be a non-shrink grout, Babbitt metal, or zinc.

R. All fasteners must be of United States manufacture and must be clearly marked with the manufacturer's designation.

8.6 Hydraulic Systems

A. Perform complete analysis and design of hydraulic systems utilized for leaf drive and control, including evaluation of pressure drops throughout the circuit for all loading conditions. Calculate pressure drops for all components of their circuits including valves, filters, hoses, piping, manifolds, flow meters, fittings, etc. Power requirements must be determined based upon pressure drops at the required flows and conservative pump efficiency values.

B. Design the system so that normal operating pressure is limited to 2500 psi. During short periods of time in emergency operations, pressure can increase to 3000 psi, maximum. Correlate hydraulic system strength calculations with the structure loading analysis.

C. Design the power unit and driving units for redundant operation so that the bridge leafs may be operated at a reduced speed with one power unit or one driving unit out of service. Design the power unit to permit its installation and removal in the bridge without removing any major components. Design the power unit to allow the removal of each pump, motor, filter, and main directional valves without prior removal of any other main components. Operation of the redundant components must be possible with the failed component removed from the system.

D. Design all span operating hydraulic components within the pier enclosure to prevent any escape of oil to the environment. Specify a drip pan extending beyond the outermost components of the power unit and flange connections to prevent spilling oil leakage on the machinery room floor. Specify sump pumps and other clean up devices suitable for safe collecting and removing of any spilled oil.

E. Design the hydraulic system to limit the normal operating oil temperature to 170° F during the most adverse ambient temperature conditions anticipated.

8.6.1 Hydraulic Pumps

Specify minimum pressure rating of pumps to be 1.5 times the maximum operating pressure. Specify pumps of the Pressure Compensated type. Variation of the pressure setting, including ±50 cst viscosity change must be ±2.5% maximum. Overall minimum efficiency must be 0.86. Boost pumps of any power, and auxiliary or secondary pumps less than 5 hp [3.7 kW], need not be pressure compensated.

8.6.2 Cylinders

A. Design the hydraulic cylinder drive systems to prevent sudden closure of valves, and subsequent sudden locking of cylinders, in the event of a power failure or emergency stop. Specify cylinders designed according to ASME Pressure Vessel Code, Section 8. Specify cylinders with a minimum theoretical static failure pressure rating of 11 (10,000 psi) as defined by NFPA Standards; and designed to operate on biodegradable-based hydraulic fluid unless otherwise approved by the Mechanical/Electrical Section of the SDO.

B. Specify stainless steel rods with chrome plated finish 0.005 to 0.012 inches thick per QQ-C-320C, Class 2a or others as approved by the Mechanical/Electrical Section of the SDO.

C. The main lift cylinders must be provided with pilot operating counterbalance or other load protection valves. They must be manifolded directly to ports of cylinder barrel and hold load in position if supply hoses leak or fail.

8.6.3 Control Components

A. Flow Control Valves: Use of non-compensated flow control valves must be limited to applications where feed rates are not critical and where load induced pressure is relatively

constant. Where load induced pressure is variable, specify pressure compensated flow control valves.

B. Directional Valves: Vertical mounting of solenoid Directional Valves where solenoids are hanging from the valve is to be avoided; horizontal mounting is recommended. Solenoid operated directional control valves provided with a drain connection to reduce response times must always be mounted horizontally.

C. Relief Valves: Specify relief valves to protect all high-pressure lines.

D. Check Valves: Specify poppet type check valves on main circuits or located to hold loads.

8.6.4Hydraulic Lines

A. Piping: Specify stainless steel piping material conforming to ASTM A312 GRTP 304L or TP316L. For pipe, tubing, and fittings, the minimum ratio of burst pressure rating divided by design pressure in the line must be 4. Provide calculations indicating that the velocity of fluid is at or below 4.3 ft/s in suction lines, 6.5 ft/s in return lines, and 21.5 ft/s in pressure lines.

B. Manifolds: Specify the use of manifolded components.

C. Flexible Hose: Specify flexible hose only in cases where motion or vibration makes the use of rigid piping undesirable. Insure that the minimum ratio of burst pressure rating divided by design pressure in the line is 4.

D. Seals: Specify all seals, including the ones installed inside hydraulic components, to be fully compatible with the hydraulic fluid being used and adequate for the maximum pressure and temperature operating at that point.

8.6.5 Miscellaneous Hydraulic Components

A. Receivers (Reservoirs): Tanks in open-loop systems must have a capacity greater than the maximum flow of three minutes operation of all pumps connected to the tank plus 10%, and/or the capacity of the total oil volume in the system. Tanks must have an adequate heat dissipation capacity to prevent temperatures above 170° F. Tanks in closed-loop hydrostatic systems must circulate, filter, and cool enough oil to maintain a maximum oil temperature of 170° F. Specify suction port strainers with oil shut-off valves. Specify tanks with easy drainage and provided with adequate openings that allow easy cleaning of all surfaces from the inside. Specify sumps with magnetic traps to capture metal particles. Specify Stainless Steel ASTM A316L tank material. Specify the use of air bladders to avoid water contamination from air moisture condensation due to the breathing effect of the tank.

B. Filtration: Design and specify a filtering system so that filters can be easily serviced and filter elements can be changed without disturbing the system. Do not specify valves that can be left accidentally closed. Strainers are allowed in the suction lines between the tank and the main pumps. Filters can be used if the system is designed to assure that there will be enough static head under all operating conditions at the pumps' inlets. Require absolute pressure (vacuum) sensors to stop the pumps if adequate suction head is not available at the pumps' inlets, and specify pressure line filters capable of at least 10-micron filtration between the pump outlet and the rest of the hydraulic system. The system must have filters with relief-check, by-pass valve and visual clogged filter indicators. Specify a remote sensing pressure switch to indicate a clogged filter. The relief-check, bypass-valve lines must also be filtered.

C. Hydraulic Fluids: Insure that the manufacturers of the major hydraulic components used in the bridge approve the hydraulic fluid specified for use.

8.7 Electrical [AASHTO 8]

8.7.1 Electrical Service [AASHTO 8.1]

Wherever possible, design bridge electrical service for 277/480 V, three-phase, "wye." Voltage drop from point of service to furthest load must not exceed 5%. Do not apply a diversity factor when calculating loads.

8.7.2 Alternating Current Motors [AASHTO 8.5]

Size and select motors per AASHTO requirements. On hydraulic systems provide 25% spare motor capacity. Specify motors that comply with the following requirements:

A. Design Criteria For Start-Ups: 12 per hour, 2 per ten-minute period.

B. Power Output, Locked Rotor Torque, Breakdown or Pullout Torque: NEMA Design B Characteristics.

C. Testing Procedure: ANSI/IEEE 112, Test Method B. Load test motors to determine freedom from electrical or mechanical defects and compliance with performance data.

D. Motor Frames: NEMA Standard T-frames of steel or cast iron (no aluminum frames allowed) with end brackets of cast iron with steel inserts. Motors 10 Hp [7.5 kW] and larger must be TEFC.

E. Thermistor System (Motor Sizes 25 Hp [19 kW] and Larger): Three PTC thermistors embedded in motor windings and epoxy encapsulated solid-state control relay for wiring into motor starter.

F. Bearings: Grease-lubricated, anti-friction ball bearings with housings equipped with plugged provision for relubrication, rated for minimum AFBMA 9, L-10 life of 20,000 hours. Calculate bearing load with NEMA minimum V-belt pulley with belt centerline at end of NEMA standard shaft extension. Stamp bearing sizes on nameplate.

G. Nominal Efficiency: Meet or exceed values in ANSI Schedules at full load and rated voltage when tested in accordance with ANSI/IEEE 112.

H. Nominal Power Factor: Meet or exceed values in ANSI Schedules at full load and rated voltage when tested in accordance with ANSI/IEEE 112.

I. Insulation System: NEMA Class F or better.

J. Service Factor: 1.15 (except when calculating motor size, use 1.0).

8.7.3 Engine Generators [AASTHO 8.3.9]

A. Design per the requirements of the latest edition of NFPA 110. Size generators so that one side of the channel (one side of the bridge) can be opened at a time concurrent with traffic lights, navigation lights, tender house air conditioners, and house lights.

B. Specify only diesel-fueled generators. Provide fuel tank sized to hold enough fuel to run the generator, at 100% load, for 12 hours (minimum 50 gallons). Specify day tank with a minimum 10-gallon capacity. Do not use the day tank capacity as part of the main tank capacity. Submit calculations justifying recommended generator size.

8.7.4 Automatic Transfer Switch [AASHTO 8.3.8]

A. Design switch in conformance with the requirements of the latest edition of NFPA 110.

B. Specify Automatic Transfer Switch with engine generator. Specify an Automatic Transfer Switch that is fully rated to protect all types of loads, inductive and resistive, from loss of continuity of power, without de-rating, either open or enclosed.

C. Specify withstand, closing, and interrupting ratings sufficient for voltage of the system and the available short circuit at the point of application on the drawings. Provide short circuit calculations to justify ATS proposed.

8.7.5 Electrical Control [AASHTO 8.4]

A. Design an integrated control system. Develop a control interface that matches the operating needs and skill levels of the bridge tenders and maintenance personnel that will be using the system. Design a system configuration, select control devices, and program the Programmable Logic Controller (PLC) to produce the desired interface that will comply with the Operation Sequence furnished by the Mechanical/Electrical Section of the SDO.

B. Design the bridge control system to be powered through an uninterruptible power supply.

C. EMERGENCY-STOP (E-STOP) stops all machinery in the quickest possible time but in no less than 3 seconds main drives only. In an emergency, hit this button to stop machinery and

prevent damage or injury. Specify a button that is reset by twisting clockwise (or counterclockwise) to release to normal up position.

D. At a minimum, provide alarms for the following events:
1.) All bridge control failures.
2.) All generator/Automatic Transfer Switch failures.
3.) All traffic signal failures.
4.) All navigation light failures.
5.) All traffic gate failures.
6.) All span-lock failures.
7.) All brake failures (if applicable).
8.) All leaf limit switch failures.
9.) All drive failures; including motor high temperature (motors larger than 25 Hp) and all hydraulic system failures.
10.) Near and far-leaf total openings (not an alarm but part of the monitoring function).
11.) All uses of bypass functions, type and time (not an alarm but part of the monitoring function).

8.7.6 Motor Controls [AASHTO 8.6]

A. Specify full-size NEMA rated starters. Do not use IEC starters unless space constraints require their use, and then, only by obtaining prior approval from the Mechanical/Electrical Section of the SDO.

B. Do not include panelboards and transformers in the Motor Control Center (MCC) unless space constraints require it, and then, only by obtaining prior approval from the Mechanical/Electrical Section of the SDO.

8.7.7 Programmable Logic Controllers [AASHTO 8.4.2.3]

Refer to the Technical Special Provisions issued by the Mechanical/Electrical Section of the SDO.

8.7.8 Limit and Seating Switches [AASHTO 8.4.1]

Label limit switches as follows:

LEAF LIMIT SWITCHES

LS-FOFS	**F**ar **O**pposite bascule leaf **F**ULLY **S**EATED. Normally open (NO), closes when leaf is on live load shoes.
LS-FOFC	Far Opposite bascule leaf FULLY CLOSED. Normally open (NO) held closed by leaf until drive needs to go to 0 speed (Closing Cycle).
LS-FONCA	Far Opposite bascule leaf NEAR CLOSED switch "A". Normally open (NO) held closed by leaf until drive needs to go to creep speed (Closing Cycle).
LS-FONCB	Far Opposite bascule leaf NEAR CLOSED switch "B". Normally open (NO) held closed by leaf until drive needs to go to creep speed (Closing Cycle).
LS-FONOA	Far Opposite bascule leaf NEAR OPEN switch "A". Normally open (NO) held closed by leaf until drive needs to go to creep speed (Opening Cycle).
LS-FONOB	Far Opposite bascule leaf NEAR OPEN switch "B". Normally open (NO) held closed by leaf until drive needs to go to creep speed (Opening Cycle).
LS-FOFO	Far Opposite bascule leaf FULLY OPEN. Normally open (NO) held closed by leaf until drive needs to go to 0 speed (Opening Cycle).
LS-FAFS	Far Adjacent bascule leaf FULLY SEATED. Normally open (NO), closes when leaf is on live load shoes.
LS-FAFC	Far Adjacent bascule leaf FULLY CLOSED.

LEAF LIMIT SWITCHES

	Normally open (NO) held closed by leaf until drive needs to go to 0 speed.
	Far Adjacent bascule leaf NEAR CLOSED switch "A".
LS-FANCA	Normally open (NO) held closed by leaf until drive needs to go to creep speed (Closing Cycle).
	Far Adjacent bascule leaf NEAR CLOSED switch "B".
LS-FANCB	Normally open (NO) held closed by leaf until drive needs to go to creep speed (Closing Cycle).
	Far Adjacent bascule leaf NEAR OPEN switch "A".
LS-FANOA	Normally open (NO) held closed by leaf until drive needs to go to creep speed (Opening Cycle).
	Far Adjacent bascule leaf NEAR OPEN switch "B".
LS-FANOB	Normally open (NO) held closed by leaf until drive needs to go to creep speed (Opening Cycle).
	Far Adjacent bascule leaf FULL OPEN.
LS-FAFO	Normally open (NO) held closed by leaf until drive needs to go to 0 speed (Opening Cycle).
LS-NOFS	Near Opposite bascule leaf FULLY SEATED. Normally open (NO), closes when leaf is on live load shoes.
LS-NOFC	Near Opposite bascule leaf FULLY CLOSED. Normally open (NO) held closed by leaf until drive needs to go to 0 speed.
	Near Opposite bascule leaf NEAR CLOSED switch "A".
LS-NONCA	Normally open (NO) held closed by leaf until drive needs to go to creep speed (Closing Cycle).
	Near Opposite bascule leaf NEAR CLOSED switch "B".
LS-NONCB	Normally open (NO) held closed by leaf until drive needs to go to creep speed (Closing Cycle).
	Near Opposite bascule leaf NEAR OPEN switch "A".
LS-NONOA	Normally open (NO) held closed by leaf until drive needs to go to creep speed (Opening Cycle).
	Near Opposite bascule leaf NEAR OPEN switch "B".
LS-NONOB	Normally open (NO) held closed by leaf until drive needs to go to creep speed (Opening Cycle).
	Near Opposite bascule leaf FULLY OPEN.
LS-NOFO	Normally open (NO) held closed by leaf until drive needs to go to 0 speed (Opening Cycle).
LS-NAFS	Near Adjacent bascule leaf FULLY SEATED. Normally open (NO), closes when leaf is on live load shoes.
LS-NAFC	Near Adjacent bascule leaf FULLY CLOSED. Normally open (NO) held closed by leaf until drive needs to go to 0 speed.
	Near Adjacent bascule leaf NEAR CLOSED switch "A".
LS-NANCA	Normally open (NO) held closed by leaf until drive needs to go to creep speed (Closing Cycle).
	Near Adjacent bascule leaf NEAR CLOSED switch "B".
LS-NANCB	Normally open (NO) held closed by leaf until drive needs to go to creep speed (Closing Cycle).
	Near Adjacent bascule leaf NEAR OPEN switch "A".
LS-NANOA	Normally open (NO) held closed by leaf until drive needs to go to creep speed (Opening Cycle).
	Near Adjacent bascule leaf NEAR OPEN switch "B".
LS-NANOB	Normally open (NO) held closed by leaf until drive needs to go to creep speed (Opening Cycle).
LS-NAFO	Near Adjacent bascule leaf FULL OPEN.

LEAF LIMIT SWITCHES

Normally open (NO) held closed by leaf until drive needs to go to 0 speed (Opening Cycle).

TRAFFIC GATE LIMIT SWITCHES

LS-FOCTGD	**F**ar **O**n-**C**oming **T**raffic **G**ate **D**own.
LS-FOCTGDI	Far On-Coming Traffic Gate Down Interlock.
LS-FOCTGU	Far On-Coming Traffic Gate Up.
LS-FOCTGUI	Far On-Coming Traffic Gate Up Interlock.
LS-FOCTGH	Far On-Coming Traffic Gate Handcrank (Normally Closed, opens when hand crank is inserted in traffic gate motor).
LS-FOCTGOD	Far On-Coming Traffic Gate Operator Door Switch
LS-FOGTGD	Far Off-Going Traffic Gate Down.
LS-FOGTGDI	Far Off-Going Traffic Gate Down Interlock.
LS-FOGTGU	Far Off-Going Traffic Gate Up.
LS-FOGTGUI	Far Off-Going Traffic Gate Up Interlock.
LS-FOGTGH	Far Off-Going Traffic Gate Handcrank (Normally Closed, opens when hand crank is inserted in traffic gate motor).
LS-FOGTGOD	Far Off-Going Traffic Gate Operator Door Switch
LS-NOCTGD	Near On-Coming Traffic Gate Down.
LS-NOCTGDI	Near On-Coming Traffic Gate Down Interlock.
LS-NOCTGU	Near On-Coming Traffic Gate Up.
LS-NOCTGUI	Near On-Coming Traffic Gate Up Interlock.
LS-NOCTGH	Near On-Coming Traffic Gate Handcrank (Normally Closed, opens when hand crank is inserted in traffic gate motor).
LS-NOCTGOD	Near On-Coming Traffic Gate Operator Door Switch
LS-NOGTGD	Near Off-Going Traffic Gate Down.
LS-NOGTGDI	Near Off-Going Traffic Gate Down Interlock.
LS-NOGTGU	Near Off-Going Traffic Gate Up.
LS-NOGTGUI	Near Off-Going Traffic Gate Up Interlock.
LS-NOGTGH	Near Off-Going Traffic Gate Handcrank (Normally Closed, opens when hand crank is inserted in traffic gate motor).
LS-NOGTGOD	Near Off-Going Traffic Gate Operator Door Switch.

BARRIER GATES LIMIT SWITCHES (If Present)

LS-FOCTBU	**F**ar **O**n-**C**oming **T**raffic **B**arrier Gate **U**p Limit Switch
LS-FOCTBUI	Far On-Coming Traffic Barrier Gate Up Interlock Limit Switch
LS-FOCTBD	Far On-Coming Traffic Barrier Gate Down Limit Switch
LS-FOCTBDI	Far On-Coming Traffic Barrier Gate Down Interlock Limit Switch
LS-FOCTBH	Far On-Coming Traffic Barrier Gate Handcrank Inserted Limit Switch
LS-FOCTBOD	Far On-Coming Traffic Barrier Gate Operator Door Switch
LS-NOCTBU	Near On-Coming Traffic Barrier Gate Up Limit Switch
LS-NOCTBUI	Near On-Coming Traffic Barrier Gate Up Interlock Limit Switch
LS-NOCTBD	Near On-Coming Traffic Barrier Gate Down Limit Switch
LS-NOCTBDI	Near On-Coming Traffic Barrier Gate Down Interlock Limit Switch
LS-NOCTBH	Near On-Coming Traffic Barrier Gate Handcrank Inserted Limit Switch
LS-NOCTBOD	Near On-Coming Traffic Barrier Gate Operator Door Switch

BARRIER GATES LIMIT SWITCHES (If Present)

LS-FOGTBU	Far Off-Going Traffic Barrier Gate Up Limit Switch
LS-FOGTBUI	Far Off-Going Traffic Barrier Gate Up Interlock Limit Switch
LS-FOGTBD	Far Off-Going Traffic Barrier Gate Down Limit Switch
LS-FOGTBDI	Far Off-Going Traffic Barrier Gate Down Interlock Limit Switch
LS-FOGTBH	Far Off-Going Traffic Barrier Gate Handcrank Inserted Limit Switch
LS-FOGTBOD	Far Off-Going Traffic Barrier Gate Operator Door Switch
LS-NOGTBU	Near Off-Going Traffic Barrier Gate Up Limit Switch
LS-NOGTBUI	Near Off-Going Traffic Barrier Gate Up Interlock Limit Switch
LS-NOGTBD	Near Off-Going Traffic Barrier Gate Down Limit Switch
LS-NOGTBDI	Near Off-Going Traffic Barrier Gate Down Interlock Limit Switch
LS-NOGTBH	Near Off-Going Traffic Barrier Gate Handcrank Inserted Limit Switch
LS-NOGTBOD	Near Off-Going Traffic Barrier Gate Operator Door Switch

SIDEWALK GATES LIMIT SWITCHES (If Present)

LS-FOCSGO	**F**ar **O**n-**C**oming **S**idewalk **G**ate **O**pen Limit Switch
LS-FOCSGOI	Far On-Coming Sidewalk Gate Open Interlock Limit Switch
LS-FOCSGC	Far On-Coming Sidewalk Gate Closed Limit Switch
LS-FOCSGCI	Far On-Coming Sidewalk Gate Closed Interlock Limit Switch
LS-FOCSGH	Far On-Coming Sidewalk Gate Handcrank Inserted Limit Switch
LS-FOCSGOD	Far On-Coming Sidewalk Gate Operator Door Switch
LS-NOCSGO	Near On-Coming Sidewalk Gate Open Limit Switch
LS-NOCSGOI	Near On-Coming Sidewalk Gate Open Interlock Limit Switch
LS-NOCSGC	Near On-Coming Sidewalk Gate Closed Limit Switch
LS-NOCSGCI	Near On-Coming Sidewalk Gate Closed Interlock Limit Switch
LS-NOCSGH	Near On-Coming Sidewalk Gate Handcrank Inserted Limit Switch
LS-NOCSGOD	Near On-Coming Sidewalk Gate Operator Door Switch
LS-FOGSGO	Far Off-Going Sidewalk Gate Open Limit Switch
LS-FOGSGOI	Far Off-Going Sidewalk Gate Open Interlock Limit Switch
LS-FOGSGC	Far Off-Going Sidewalk Gate Closed Limit Switch
LS-FOGSGCI	Far Off-Going Sidewalk Gate Closed Interlock Limit Switch
LS-FOGSGH	Far Off-Going Sidewalk Gate Handcrank Inserted Limit Switch
LS-FOGSGOD	Far Off-Going Sidewalk Gate Operator Door Switch
LS-NOGSGO	Near Off-Going Sidewalk Gate Open Limit Switch
LS-NOGSGOI	Near Off-Going Sidewalk Gate Open Interlock Limit Switch
LS-NOGSGC	Near Off-Going Sidewalk Gate Closed Limit Switch
LS-NOGSGCI	Near Off-Going Sidewalk Gate Closed Interlock Limit Switch
LS-NOGSGH	Near Off-Going Sidewalk Gate Handcrank Inserted Limit Switch
LS-NOGSGOD	**N**ear **O**ff-**G**oing **S**idewalk **G**ate **O**perator **D**oor Switch

SPAN LOCK LIMIT SWITCHES

LS-SLAD	**S**pan **L**ock **A** **D**riven Limit Switch
LS-SLADI	Span Lock A Driven Interlock Limit Switch
LS-SLAP	Span Lock A Pulled Limit Switch
LS-SLAPI	Span Lock A Pulled Interlock Limit Switch
LS-SLAH or LS-SLAOP	Span Lock A Handcrank Inserted Limit Switch or Over Pressure Switch
LS-SLBD	Span Lock B Driven Limit Switch

SPAN LOCK LIMIT SWITCHES

LS-SLBDI	Span Lock B Driven Interlock Limit Switch
LS-SLBP	Span Lock B Pulled Limit Switch
LS-SLBPI	Span Lock B Pulled Interlock Limit Switch
LS-SLBH or LS-SLBOP	Span Lock B Handcrank Inserted Limit Switch or Over Pressure Switch
LS-SLCD	Span Lock C Driven Limit Switch
LS-SLCDI	Span Lock C Driven Interlock Limit Switch
LS-SLCP	Span Lock C Pulled Limit Switch
LS-SLCPI	Span Lock C Pulled Interlock Limit Switch
LS-SLCH or LS-SLCOP	Span Lock C Handcrank Inserted Limit Switch or Over Pressure Switch
LS-SLDD	Span Lock D Driven Limit Switch
LS-SLDDI	Span Lock D Driven Interlock Limit Switch
LS-SLDP	Span Lock D Pulled Limit Switch
LS-SLDPI	Span Lock D Pulled Interlock Limit Switch
LS-SLDH or LS-SLDOP	Span Lock D Handcrank Inserted Limit Switch or Over Pressure Switch

TAIL LOCK LIMIT SWITCHES (If Present)

LS-TLAD	**T**ail **L**ock "**A**" bar **D**riven Limit Switch.
LS-TLADI	Tail Lock "A" bar Driven Interlock Limit Switch.
LS-TLAP	Tail Lock "A" bar Pulled Limit Switch.
LS-TLAPI	Tail Lock "A" bar Pulled Interlock Limit Switch.
LS-TLAHC	Tail Lock "A" Hand crank Coupled (Normally Closed, opens when hand crank is inserted in lock motor).
LS-TLBD	Tail Lock "B" bar Driven Limit Switch.
LS-TLBDI	Tail Lock "B" bar Driven Interlock Limit Switch.
LS-TLBP	Tail Lock "B" bar Pulled Limit Switch.
LS-TLBPI	Tail Lock "B" bar Pulled Interlock Limit Switch.
LS-TLBHC	Tail Lock "B" Hand crank Coupled (Normally Closed, opens when hand crank is inserted in lock motor).
LS-TLCD	Tail Lock "C" bar Driven Limit Switch.
LS-TLCDI	Tail Lock "C" bar Driven Interlock Limit Switch.
LS-TLCP	Tail Lock "C" bar Pulled Limit Switch.
LS-TLCPI	Tail Lock "C" bar Pulled Interlock Limit Switch.
LS-TLCHC	Tail Lock "C" Hand crank Coupled (Normally Closed, opens when hand crank is inserted in lock motor).
LS-TLDD	Tail Lock "D" bar Driven Limit Switch.
LS-TLDDI	Tail Lock "D" bar Driven Interlock Limit Switch.
LS-TLDP	Tail Lock "D" bar Pulled Limit Switch.
LS-TLDPI	Tail Lock "D" bar Pulled Interlock Limit Switch.
LS-TLDHC	Tail Lock "D" Hand crank Coupled (Normally Closed, opens when hand crank is inserted in lock motor).

BRAKE LIMIT SWITCHES

LS-FAOABR	**F**ar **A**djacent Motor **A** **B**rake **R**eleased Limit Switch
LS-FAOABMR	Far Adjacent Motor A Brake Manually Released Limit Switch

BRAKE LIMIT SWITCHES

LS-FAOABS	Far Adjacent Motor A Brake Set Limit Switch
LS-FAOBBR	Far Adjacent Motor B Brake Released Limit Switch
LS-FAOBBMR	Far Adjacent Motor B Brake Manually Released Limit Switch
LS-FAOBBS	Far Adjacent Motor B Brake Set Limit Switch
LS-FAABR	Far Adjacent Machinery Brake Released Limit Switch
LS-FAABMR	Far Adjacent Machinery Brake Manually Released Limit Switch
LS-FAABS	Far Adjacent Machinery Brake Set Limit Switch
LS-NAOABR	Near Adjacent Motor A Brake Released Limit Switch
LS-NAOABMR	Near Adjacent Motor A Brake Manually Released Limit Switch
LS-NAOABS	Near Adjacent Motor A Brake Set Limit Switch
LS-NAOBBR	Near Adjacent Motor B Brake Released Limit Switch
LS-NAOBBMR	Near Adjacent Motor B Brake Manually Released Limit Switch
LS-NAOBBS	Near Adjacent Motor B Brake Set Limit Switch
LS-NAABR	Near Adjacent Machinery Brake Released Limit Switch
LS-NAABMR	Near Adjacent Machinery Brake Manually Released Limit Switch
LS-NAABS	Near Adjacent Machinery Brake Set Limit Switch
LS-FOOABR	Far Opposite Motor A Brake Released Limit Switch
LS-FOOABMR	Far Opposite Motor A Brake Manually Released Limit Switch
LS-FOOABS	Far Opposite Motor A Brake Set Limit Switch
LS-FOOBBR	Far Opposite Motor B Brake Released Limit Switch
LS-FOOBBMR	Far Opposite Motor B Brake Manually Released Limit Switch
LS-FOOBBS	Far Opposite Motor B Brake Set Limit Switch
LS-FOABR	Far Opposite Machinery Brake Released Limit Switch
LS-FOABMR	Far Opposite Machinery Brake Manually Released Limit Switch
LS-FOABS	Far Opposite Machinery Brake Set Limit Switch
LS-NOOABR	Near Opposite Motor A Brake Released Limit Switch
LS-NOOABR	Near Opposite Motor A Brake Manually Released Limit Switch
LS-NOOABS	Near Opposite Motor A Brake Set Limit Switch
LS-NOOBBR	Near Opposite Motor B Brake Released Limit Switch
LS-NOOBBMR	Near Opposite Motor B Brake Manually Released Limit Switch
LS-NOOBBS	Near Opposite Motor B Brake Set Limit Switch
LS-NOABR	Near Opposite Machinery Brake Released Limit Switch
LS-NOABMR	Near Opposite Machinery Brake Manually Released Limit Switch
LS-NOABS	**N**ear **O**pposite Machinery **B**rake **S**et **L**imit **S**witch

AUXILIARY DRIVE LIMIT SWITCHES (If Present)

LS-FOADC	**F**ar **O**pposite **A**uxiliary **D**rive Coupled (Normally Closed, opens when drive is coupled).
LS-FAADC	**F**ar **A**djacent **A**uxiliary **D**rive Coupled (Normally Closed, opens when drive is coupled).
LS-NOADC	**N**ear **O**pposite **A**uxiliary **D**rive **C**oupled (Normally Closed, opens when drive is coupled).
LS-NAADC	**N**ear **A**djacent **A**uxiliary **D**rive **C**oupled (Normally Closed, opens when drive is coupled).

Design each movable leaf with FULL-CLOSED, NEAR-CLOSED, NEAR-OPEN, FULL-OPEN, and FULL-SEATED limit switches. Specify NEMA 4, corrosion resistant metallic housings which have a high degree of electrical noise immunity and a wide operating range. Specify that NEAR-OPEN and NEAR-CLOSED limit switches be mounted, initially, approximately eight (8) degrees

from FULL-OPEN and FULL-CLOSED, respectively. Final adjustment of NEAR-OPEN and NEAR-CLOSED will depend upon bridge configuration, drive machinery, and bridge operation.

Commentary: The FULL-CLOSED switch controls the drive stop and the FULL-SEATED switch is the safety interlock to allow driving the locks.

Do not connect limit switches in series. Connect each limit switch to a relay coil or a PLC input. Provide position encoder (potentiometer or other type) to drive leaf position indicators on control console. The position encoder will also provide a signal to the PLC to use as a reference to determine leaf limit switch failure. Connect limit switches in the following configurations:

Traffic Gates: End-Of-Travel configuration.
Span Locks: End-Of-Travel configuration.
Leaf(s): End-Of-Travel configuration.
Safety Interlocks: Indicating configuration.
Do not use electronic limit switches. Plunger type switches are optional.

8.7.9 Safety Interlocking [AASHTO 8.4.1]

A. Traffic Lights: Traffic gates LOWER is not enabled until traffic lights RED. Provide bypass capability labeled TRAFFIC LIGHT BYPASS to allow traffic gates LOWER without traffic lights RED.

B. Traffic Gates:
   1.) Bridge Opening: Span locks PULL is not enabled until all traffic gates are fully down (or TRAFFIC GATE BYPASS has been engaged).
   2.) Bridge Closing: Traffic lights GREEN is not enabled until all traffic gates are fully raised (or TRAFFIC GATE BYPASS has been engaged).
   3.) Provide bypass capability labeled TRAFFIC GATE BYPASS to allow span lock PULL without all traffic gates LOWERED or traffic lights GREEN without all traffic gates RAISED.

C. Span Locks:
   1.) Bridge Opening: Leaf RAISE is not enabled until all span locks are fully pulled (or SPAN LOCK BYPASS has been engaged).
   2.) Bridge Closing: Traffic gate RAISE is not enabled until all span locks are fully driven (or SPAN LOCK BYPASS has been engaged).
   3.) Provide bypass capability and label SPAN LOCK BYPASS to allow leaf RAISE without all span locks pulled or traffic gate RAISE without all span locks DRIVEN. Leaf(s):

D. Leaf:
   1.) Span locks DRIVE is not enabled until leaf (s) is(are) FULLY SEATED (as indicated by the FULLY SEATED switch).
   2.) Provide bypass capability and label LEAF BYPASS to allow span lock DRIVE without leaf (s) FULLY SEATED.

8.7.10 Instruments [AASHTO 8.4.5]

Provide wattmeter for each drive (pump) motor and provide leaf position indication for each leaf.

8.7.11 Control Console [AASHTO 8.4.6]

A. Provide a Control Console that contains the necessary switches and indicators to perform semi-automatic and manual operations as required by the standard FDOT Basic Sequence Diagram.

B. All wiring entering or leaving the Control Console must be broken across approved terminals.

C. No components other than push buttons, selector switches, indicating lights, terminal blocks, etc., must be allowed in the Control Console. Refer to the Technical Special Provisions issued by the Mechanical/Electrical Section of the SDO.

8.7.12 Electrical Connections between Fixed and Moving Parts

AASHTO 8.9.5] Use extra flexible wire or cable.

8.7.13 Electrical Connections across the Navigable Channel

A. Specify a submarine cable assembly consisting of the following three separate cables:
   1.) Power Cable: Jacketed and armored with twelve #4 AWG copper and twelve #10 AWG copper conductors.
   2.) Signal and Control Cable: Jacketed and armored with fifty #12 AWG copper and five pairs of twisted shielded #14 AWG copper conductors.
   3.) Bonding Cable: A single #4/0 AWG copper conductor.

B. Determine the total number of conductors required of each size and the number of runs of each type of cable that is required for the project. Use only multiples of the standard cables listed above. Allow for at least 25% spare conductors for each size.

C. Specify quick-disconnect type terminals for terminating conductors. Specify terminals that isolate wires from a circuit by a removable bridge or other similar means. Specify NEMA 4X enclosures for all terminals.

D. Design all above the water line, vertical runs of cable with supports at every five feet. Specify and detail a protective sleeve (schedule 120 PVC) around the cable from a point 5 feet below the mean low tide to a point 5 feet above mean high tide. Specify a watertight seal at both ends of the sleeve.

8.7.14 Service Lights [AASHTO 8.11]

Provide minimum of 30-foot candles in all areas of the machinery platform.

8.7.15 Navigation Lights [AASHTO 1.4.4.6.2]

Design a complete navigation light and aids system in accordance with all local and federal requirements and **Standard Drawings** Nos. 510 and No. 511. Comply with the latest edition of the **Code of Federal Regulations** (CFR) 33, Part 118, and Coast Guard Requirements.

8.7.16 Grounding and Lightning Protection [AASHTO 8.12 and 8.13]

A. Provide the following systems:
   1.)Lightning Protection System: Design per the requirements of ***NFPA 780 Lightning Protection Code***. Protect the bridge with Class II materials.
   2.) Surge Suppression System: Design Transient Voltage Surge Suppressor (TVSS) system to protect all power, control, signaling, and communication circuits and all submarine conductors that enter or leave the control house. It is imperative to maintain proper segregation of protected and non-protected wiring within the Bridge Tender House. Refer to the Technical Special Provisions issued by the Mechanical/Electrical Section of the SDO.
   3.) Grounding and Bonding System: All equipment installed on the bridge/project must be bonded together by means of a copper bonding conductor which runs the entire length of the project (Traffic Light to Traffic Light). All metal bridge components (i.e., handrail, roadway light poles, traffic gate housings, leafs, etc.) will be connected to the copper-bonding conductor. The copper-bonding conductor must remain continuous across the channel by means of the submarine bonding cable.

B. Require earth grounds at regular intervals with no less than two driven grounds at each pier and one driven ground at each overhead traffic light structure and traffic gate. Test all driven grounds to a maximum of 5 ohms to ground.

C. All main connections to the copper-bonding conductor must be cadwelded.

D. In areas where the copper-bonding conductor is accessible to non-authorized personnel, it must be enclosed in Schedule 80 PVC conduit with stainless steel supports every 5 feet.

8.7.17 Movable Bridge Traffic Signals and Safety Gates [AASHTO 1.4.4]

Refer to **Roadway Standard Index** No. 17890 for Traffic Control Devices for Movable Span Bridge Signals.

8.7.18 Communications Systems [N/A]

Design and specify a Public Address System, an Intercom System, and a Marine Radio System for each movable bridge. The three systems must work independent of each other and meet the following criteria:

A. Public Address System: One-way handset communication from the operators console to multiple zones (marine channel, roadway, machinery platforms, and other rooms). Specify an all call feature so that the operator may call all zones at once. Specify and detail loudspeakers mounted on the pier wall facing in both directions of the channel, one loudspeaker mounted at each overhead traffic signal, facing the oncoming gate, and loudspeakers at opposite ends of the machinery platform.

B. Intercom System: Two-way communication system that will work similar to an office telephone system with station-to-station calling from any station on the system and all call to all stations on the system from the main intercom panel. Each station must have a hands free capability. A call initiated from one station to another must open a channel and give a tone at the receiving end. The receiving party must have the capability of answering the call by speaking into the open speaker channel, or by picking up the local receiver and speaking into it. All intercom equipment must be capable of operation in a high noise, salt air environment. A handset must be mounted adjacent to the control console, in each room on the bridge and on each machinery platform.

C. Marine Radio System: Hand held, portable, operable on or off the charger, tuned to the proper channels, and a 120-volt charger located adjacent to the operator's console.

8.7.19 Functional Checkout

A. Develop and specify an outline for performing system checkout of all mechanical/electrical components to insure contract compliance and proper operation. Specify in-depth testing to be performed by the Contractor.

B. Functional testing for the electrical control system consists of two parts. Perform the first part before delivery and the second part after installation on the bridge. Both tests must be comprehensive. Perform the off-site functional testing to verify that all equipment is functioning as intended.

C. All repairs or adjustments must be made before installation on Department property. All major electrical controls must be assembled and tested in one place, at one time. The test must include as a minimum: control console, PLC, relay back-up system, Motor Control Center, and all other equipment required, in the opinion of the Electrical Engineer of Record, to complete the testing to the satisfaction of the Mechanical/Electrical Section of the SDO.

D. If not satisfactory, repeat the testing at no cost to the Department. All equipment must be assembled and inter-connected (as they would be on the bridge) to simulate bridge operation. No inputs or outputs must be forced. Indication lights must be provided to show operation and hand operated toggle switches may be used to simulate field limit switches.

E. After the off-site testing is completed to the satisfaction of the Mechanical/Electrical Section of the SDO, the equipment may be delivered and installed. The entire bridge control system must be re-tested before the bridge is put into service. The field functional testing must include, but is not necessarily limited to, the off-site testing procedure.

8.7.19 Functional Checkout Tests

As a minimum, perform the following tests of Control Functions for both manual and semi-automatic operations:

Commentary: The Electrical Engineer of Record is encouraged to include tests for other equipment not included in the minimum tests listed below.

A. Demonstrate the correct operation of the bridge sequence as described in the Technical Special Provisions and in the drawings.

B. Demonstrate EMERGENCY STOP of each span (leaf) at, or during, each phase of opening and closing the bridge (phases include ramping up or down, full-speed, and creep-speed).

C. Demonstrate EMERGENCY STOP does prevent energization of all rotating machinery in any mode of operation.

D. Demonstrate that the leafs do not come to a sudden stop on a power failure.

E. Interlocks:
1.) Simulate the operations of each limit switch to demonstrate correct operation and interlocking of systems.
2.) Demonstrate BYPASS operation for each failure for each required bypass.
3.) Simulate each failure for which there is an alarm message to demonstrate correct message displays.
4.) Testing of interlocks must be sufficient to demonstrate that unsafe or out of sequence operations are prevented.
5.) Observe Position Indicator readings with bridge closed and full open to assure correct readings.

F. Navigation Lights:
1.) Demonstrate that all lamps are working.
2.) Demonstrate the operation of the transfer relays and indicators for each light.
3.) Demonstrate proper change of channel lights from red to green.
4.) Demonstrate Battery Backup by simulating a power outage.

G.) Traffic Gates:
1.) Demonstrate proper operation of each gate arm.
2.) Demonstrate opening or closing times. Time should not exceed 15 seconds in either direction.
3.) Demonstrate that gate arms are perpendicular to the roadway when RAISED and parallel to the roadway when LOWERED.

H. Span Locks:
1.) Operate each span lock through one complete cycle and record, with chart recorder, motor power (watts) throughout the operation, record lockbar to guide and lockbar to receiver, clearances.
2.) Demonstrate pulling and driving times. Time should not exceed 10 seconds in either direction.
3.) Operate each lock with hand crank or manual pump for one complete cycle.

I. Emergency Power:
1.) The complete installation must be initially started and checked-out for operational compliance by a factory-trained representative of the manufacturer of the generator set and the Automatic Transfer Switch. The supplier of the generator set must provide the engine lubrication oil and antifreeze recommended by the manufacturer for operation under the environmental conditions specified.
2.) Upon completion of initial start-up and system checkout, the supplier of the generator set must notify the Engineer in advance and perform a field test to demonstrate load-carrying capability, stability, voltage, and frequency.
3.) Specify a dielectric absorption test on generator winding with respect to ground. A polarization index must be determined and recorded. Submit copies of test results to the Engineer.
4.) Phase rotation test must be made to determine compatibility with load requirements.
5.) Engine shutdown features such as low oil pressure, over-temperature, over-speed, over-crank, and any other feature as applicable must be function-tested.
6.) In the presence of the Engineer, perform resistive load bank tests at one hundred percent (100%) nameplate rating. Loading must be 25%-rated for 30 minutes, 50%-rated for 30 minutes, 75%-rated for 30 minutes, and 100%-rated for 2 hours. Maintain records throughout this period and record water temperature, oil pressure, ambient air temperature, voltage, current, frequency, kilowatts, and power factor. The above data must be recorded at 15-minute intervals throughout the test.

J. Automatic Transfer Switch: Perform automatic transfer by simulating loss of normal power and return to normal power. Monitor and verify correct operation and timing of: normal voltage

sensing relays, engine start sequence, time delay upon transfer, alternate voltage sensing relays, automatic transfer operation, interlocks and limit switch function, timing delay and retransfer upon normal power restoration, and engine shut-down feature.

K. Programmable Logic Controller (PLC) Program:
   1.) Demonstrate the completed program's capability prior to installation or connection of the system to the bridge. Arrange and schedule the demonstration with the Engineer and the Electrical Engineer of Record.
   2.) A detailed field test procedure must be written and provided to the Electrical Engineer of Record for approval. Provide for testing as listed below:
      a.) Exercise all remote limit switches to simulate faults including locks, gates, traffic lights, etc. Readouts must appear on the alphanumeric display.
      b.) When the local testing of all individual remote components is completed, check all individual manual override selections for proper operation at the console. When all override selections have been satisfactorily checked-out, switch the system into semi-automatic (PLC) mode and exercise for a full raise and lower cycle. Verify that operation is as diagrammed on the plan sheet for the sequence of events.
      c.) Initiate a PLC sequence of operation interweaving the by-pass functions with the semi-automatic functions for all remote equipment.
      d.) Remove the power from the input utility lines. The Automatic Transfer Switch (ATS) should activate the engine-generator to supply power. Raise and lower the bridge again. The bascule leafs should operate in sequence; i.e., two adjacent bascule leafs at a time. Upon completion of the test, re-apply utility power to ATS. The load should switch over to utility for normal operation.
      e.) Certify that all safety features are included in the program, and that the program will not accept commands that are contrary to the basic sequence diagram. Submit failure mode testing as part of the written field test procedure.

8.8 Control House Architectural Design

A. A control house is the ‘building’ designed as part of a movable bridge (Bascule, ‘drawbridge’, etc.) which is occupied by the bridge operator. This facility houses the business functions, and mechanical & electrical systems used to operate the bridge. This includes equipment such as pumps, motors, generators, etc. and systems such as controls, lighting, plumbing, and HVAC.

B. The design of new control houses and renovation of existing control houses must comply with the requirements of the FLORIDA BUILDING CODE.

C. Operation areas contain business functions. Equipment areas contain mechanical and electrical equipment.

8.8.1 General

A. These guidelines are intended primarily for use in the design of new control houses but many items apply to renovations of existing houses.

B. The operator should be able to hear all traffic (vehicular and marine) as well as see traffic from the primary work station in the operation area.

C. Heat gain can be a problem. Where sight considerations permit, insulated walls should be used as a buffer against heat gain. Provide 4 to 5 foot roof overhangs.

D. The preferred wall construction is reinforced concrete; minimum six inches thick with architectural treatments such as fluted corner pilasters, arches, frieze ornamentation, horizontal banding or other relief to blend with local design considerations.

E. Finish exterior of house with stucco, Class V coating or spray-on granite or cast stone.

F. Design the Bridge Tenders Room with a minimum of 200 square feet of usable floor space. This allows enough room for a toilet, kitchenette, and coat/mop closet as well as wall-hung desk and control console. Add additional square footage for stairwells, or place stairs on exterior of structure.

G. Windowsills should be no more than 34 inches from the floor. This allows for operator vision when seated in a standard task chair.

H. Consideration should be given to lines of sight form control station during column sizing and spacing.

I. For operator standing at control console, verify site lines to:
   1.) Traffic gates for both directions of automobile traffic.
   2.) Marine traffic for both directions of the navigable channel.
   3.) Locations where pedestrians normally will stop.
   4.) Under side of bridge, at channel, via video cameras (4) with recording capabilities for accident investigation.

8.8.2 Site Water Lines

A. Specify pipe and fittings for site water lines including domestic water line, valves, fire hydrants and domestic water hydrants. Size to provide adequate pressure and detail drawings as necessary to show location and extent of work.

B. Specify disinfection of potable water distribution system and all water lines per the requirements of American Water Works Association (AWWA).

8.8.3 Site Sanitary Sewage System

A. Gravity lines to manholes are preferred. Avoid the use of lift stations. However if lift stations are required, special consideration must be given to daily flows as well as pump cycle times. Low daily flows result in long cycle times and associated odor problems. Include pump and flow calculations and assumptions in 60% submittal.

B. For bridges which are not served by a local utility company, or where connection is prohibitively expensive, and where septic tanks are not permitted or practical, coast guard approved marine sanitation devices are acceptable.

8.8.4 Stairs, Steps and Ladders

A. Stair treads must be at least 3 feet wide and comply with codes in regard to riser and tread dimensions. Comply with OSHA requirements. The preferred tread is skid-resistant open grating. Avoid the use of ladders or stair ladders.
Commentary: Ships ladders may be used, only as last resort for very limited height (4 feet vertical maximum).

B. Stairs and landings may be on the exterior of the house.
Commentary: This reduces heating and cooling requirements as well as providing more usable floor space.

C. For interior stairwells, spiral stairs (Minimum 6 foot diameter) are acceptable although not preferred. Special attention must be paid to clearances for moving equipment into or out of a control house. Design stair assembly to support live load of 100-lbs/sq ft with deflection of stringer not to exceed 1/180 of span. Include calculations in 60% submittal.

D. In situations where stairs cannot be accommodated, stair ladders may be used. Vertical ladders should not be used.

8.8.5 Handrails, Railing and Grating

A. Specify standard I.P.S. size, schedule 40, 1½ inch O.D. steel or aluminum pipe with corrosion resistant, slip-on structural fittings that permit easy field installation and removal.

B. Welded tube rails are not preferred.

C. Design railing assembly, wall rails, and attachments to resist a load of 200 pounds at any point and in any direction, plus a continuous load of 50 psf in any direction without damage or permanent set. Include calculations in 60% submittal.

D. Grating and Floor Plates. Specify skid resistant open grating, except at control level.

8.8.6 Framing and Sheathing

Include a specification section for the following items if used:

A. Structural floor, wall, and roof framing.
B. Built-up structural beams and columns.
C. Diaphragm trusses fabricated on site.
D. Floor, wall, and roof sheathing.
E. Sill gaskets and flashing.
F. Preservative treatment of wood.
G. Fire retardant treatment of wood.
H. Telephone and electrical panel back boards.
I. Concealed wood blocking for support of toilet and bath accessories, wall cabinets, and wood trim.
J. All other sections applicable to tender house design and construction.

8.8.7 Desktop and Cabinet

A. Specify and detail a wall-hung desktop with drawer. Show desktop.
B. Specify and detail a minimum 7 feet of 36-inch base cabinets and 7 feet of 24-inch or 36-inch wall cabinets.
C. Specify cabinet hardware and solid-surfacing material counter-tops and desktop.

8.8.8 Insulation

A. Design the tender house so that insulation meets the following requirements: Walls - RI9, Roof assembly - R30.
B. Board Insulation may be used at underside of floor slabs, exterior walls, and between floors separating conditioned and unconditioned spaces.
C. Batt Insulation may be used in ceiling construction and for filling perimeter and door shim spaces, crevices in exterior wall and roof.

8.8.9 Fire-Stopping

Specify, design, and detail fire-stopping for wall and floor penetrations.
A. Main Floor Walls: 1 Hour
B. Stair Walls (Interior): 2 Hours
C. Interior Partitions: ¾ Hour

8.8.10 Roof

A. Do not use flat roofs, “built-up” roofs, etc.
B. Design: Hip roof with minimum 6:12 pitch and 4 to 5 foot overhang.
C. Roof Material: Specify and detail either standing seam 18 gauge metal or glazed clay tiles. Note: many of the coastal environments will void the manufacturer’s warranty for metal. Before specifying a metal roof determine if the manufacturer will warrant the roof in the proposed environment, if not, use tiles meeting or exceeding the Grade I requirements of ASTM C 1167.
D. Soffit: Specify ventilated aluminum or vinyl.
E. Fascia: Specify aluminum, vinyl or stucco.
F. Design for hurricane force uplift on roof, roof framing, decking, anchors and other components. Include roof load and uplift calculations in 60% submittal.
G. During design, consider underlayment, eave, and ridge protection, nailers and associated metal flashing.

8.8.11 Doors and Hardware

A. Specify and detail armored aluminum entry doors; ballistics rated for .357 Magnum fired at point blank range.

B. Interior Doors:
   1.) Passage - Solid core or solid wood.
   2.) Closets – Louvered.

C. Hardware:
   1.) Specify corrosion resistant, heavy-duty, commercial ball-bearing hinges and levered locksets and dead bolts for entry doors.
   2.) Specify adjustable thresholds, weather-stripping, seals and door gaskets.
   3.) Specify interior locksets.
   4.) Call for all locks keyed alike and spare keys.

8.8.12 Windows

A. Specify windows complying with the American Architectural Manufacturers Association standards (AAMA) for heavy commercial windows.

B. Specify double-hung, marine glazed heavy commercial (DHHC) type extruded aluminum windows. Glazing must be ballistics-rated for .357 Magnum fired at point blank range.

C. Specify windows to be counter balanced to provide 60% lift assistance.

D. Specify operating hardware and insect screens.

E. Specify perimeter sealant.

F. When ballistic glazing is required, specify glazing that is rated for .357 Magnum round fired at point blank range.

G. Structural Loads: ASTM E330-70. With 60-lb/sq ft [2.87 kPa] exterior uniform load and 60-lb/sq ft [2.87 kPa] interior load applied for I0 seconds with no glass breakage, permanent damage to fasteners, hardware parts, actuating mechanisms or any other damage.

H. Air Leakage: No more than 0.35 cfm/min/sq ft [0.002cu m/s/sq in] of wall area, measured at a reference differential pressure across assembly of 1.57 psf [75 Pa] as measured in accordance with ASTM E283.

I. Water Leakage: None, when measured in accordance with ASTM E331 with a test pressure of 6 psf applied at 5 gallons per hour per square ft.

8.8.13 Veneer Plaster (Interior Walls)

Specify ¼-inch plaster veneer over ½-inch moisture-resistant gypsum wallboard (blueboard), masonry and concrete surfaces.

8.8.14 Gypsum Board (Interior Walls)

A. Specify ½-inch blueboard for plaster veneer.

B. Specify ½-inch fiberglass reinforced cement backer board for tile.

8.8.15 Floor Tile

A. Specify non-skid quarry tile on tender's level.

B. Do not use vinyl floor tiles or sheet goods.

8.8.16 Epoxy Flooring

A. Specify fluid applied non-slip epoxy flooring for electrical rooms, machinery rooms and machinery platforms.

B. Ensure that the manufacturer of the product warrants the product used and that it is installed per their instructions.

C. Do not specify painted floors.

8.8.17 Painting

Specify paint for woodwork and walls.

8.8.18 Wall Louvers

Use rainproof intake and exhaust louvers and size to provide required free area. Design with minimum 40% free area to permit passage of air at a velocity of 335 ft/min [160 L/sec] without blade vibration or noise with maximum static pressure loss of 0.25 inches [6 mm] measured at 375 ft/m in [175 L/sec].

8.8.19 Toilet and Bath Accessories

A. Specify a mirror, soap dispenser, tissue holder, paper towel dispenser, and a waste paper basket for each bathroom.

B. Specify a bathroom exhaust fan.

C. Porcelain water closet and lavatory.

8.8.20 Equipment and Appliances

A. Specify a shelf mounted or built-in 1.5 cubic foot microwave with digital keypad and users manual.

B. Specify an under counter refrigerator with users manual.

C. Specify a fire extinguisher for each room. Type ABC 10.

8.8.21 Furnishings

A. Specify two, gas lift, front-tilt task chairs.

B. Provide one R5 cork bulletin board.

C. Specify window treatment (blinds or shades).

8.8.22 Pipe and Fittings

A. Specify pipe fittings, valves, and corporation stops, etc.

B. Provide hose bib outside house.

C. Provide wall-mounted, corrosion resistant (fiberglass or plastic) hose hanger and 50-foot, nylon reinforced, ¾ inch garden hose in a secure area.

D. Provide stops at all plumbing fixtures.

E. Provide primed floor drains.

F. Provide air traps to eliminate/reduce water hammer.

G. Provide ice maker supply line.

8.8.23 Plumbing Fixtures

A. Specify a single bowl, stainless steel, self-rimming kitchen counter sink, a sink faucet, a lavatory, a lavatory faucet, and an elongated toilet.

B. Do not specify ultra-low flow fixtures unless the bridge has a marine digester system.

C. Specify all trim, stops, drains, tail pieces, etc. for each fixture.

D. Provide 10-gallon water heater for kitchen sink and lavatory.

8.8.24 Heating, Ventilating and Air Conditioning

A. A central split unit is preferred but multiple, packaged units may be acceptable for rehabs. Design HVAC system with indoor air handler, duct work and out-door unit(s).

B. Perform load calculations and design the system accordingly. Include load calculations in 60% or 75% submittal.

C. For highly corrosive environments use corrosive resistant equipment.

D. Specify packaged terminal air conditioning units.

E. Specify packaged terminal heat pump units.

F. Specify and detail wall sleeves and louvers.

G. Specify controls.

H. Specify and show ceiling fans on floor plan.

I. Specify ventilation equipment for machinery levels and attic.

8.8.25 Interior Luminaires

A. Specify fixtures under section 508 of FDOT Standard Specifications for Road and Bridge Construction, current adopted edition.

B. Avoid the use of heat producing fixtures.

C. Do not use PCV Ballasted lighting fixtures

8.8.26 Video Equipment

A. Cameras (4): One camera each channel direction to provide full view of channel and fender system and one camera each direction of traffic to provide view of all travel lanes and sidewalks.

B. Monitors (4): One for each camera.

C. Provide recording capabilities for each camera.

8.9 Maintainability

8.9.1 General

The following guidelines for maintainability of movable bridges are applicable to both new bridges and to rehabilitation plans for existing bridges on which construction has not been initiated. Variations from these practices for the rehabilitation of existing bridges may be authorized by the Mechanical/Electrical Section of the SDO, but only by approval in writing.

8.9.2 Trunnion Bearings

A. Design trunnion bearings so that replacement of bushings can be accomplished with the span jacked ½-inch [12 mm] and in a horizontal position. Provide suitable jacking holes or puller grooves in bushings to permit extraction. Jacking holes must utilize standard bolts pushing against the housing that supports the bushing.

B. Specify trunnion bushings and housings of a split configuration. The bearing cap and upper-half bushing (if an upper-half bushing is required) must be removable without span jacking or removal of other components.

8.9.3 Span-Jacking of New Bridges

A. Stationary stabilizing connector points are located on the bascule pier. These points provide a stationary support for stabilizing the span, by connection to the span stabilizing connector points. Locate one set of span-jacking surfaces under the trunnions (normally, this will be on the bottom surface of the bascule girder). Locate a second set on the lower surface at the rear end of the counterweight.

B. Locate span stabilizing connector points on the bascule girder forward and back of the span jacking surfaces. The stationary stabilizing connector point (forward) must be in the region of the Live Load Shoe. Locate stationary stabilizing connector points (rear) on the cross girder support at the rear of the bascule pier. Provide connector points to attach stabilizing structural steel components.

Commentary: Position the stationary jacking surface at an elevation as high as practical so that standard hydraulic jacks can be installed.

C. The following definitions of terms used above describe elements of the span-jacking system:
   1.) Span-jacking Surface: An area located under the trunnion on the bottom surface of the bascule girder.
   2.) Span Stabilizing Connector Point (forward): An area adjacent to the live load shoe point of impact on the bottom surface of the bascule girder.
   3.) Span Stabilizing Connector Point (rear): An area at the rear end of the counterweight on the lower surface of the counterweight girder. (NOTE: For bascule bridges having tail

locks, the span stabilizing connector point may be located on the bottom surface of the lockbar receiver located in the counterweight.)

4.) Stationary Jacking Surface: The surface located on the bascule pier under the span jacking surfaces. The stationary jacking surface provides an area against which to jack in lifting the span.

8.9.4 Trunnion Alignment Features

A. Provide center holes in trunnions to allow measurement and inspection of trunnion alignment. Span structural components must not interfere with complete visibility through the trunnion center holes. Provide individual adjustment for alignment of trunnions.

B. Provide a permanent walkway or ladder with work platform to permit inspection of trunnion alignment.

8.9.5 Lock Systems

A. Span locks are to be accessible from the bridge sidewalk through a suitable hatch or access door. Provide a work platform suitable for servicing of the lockbars under the deck and in the region around the span locks.

B. Design lock systems to allow disabling an individual lock, for maintenance or replacement, without interfering with the operation of any of the other lockbars on the bascule leaf.

C. Design tail locks, when required, so that the lockbar mechanism is accessible for repair without raising the leaf. The lockbar drive mechanism must be accessible from a permanently installed platform within the bridge structure.

D. Provide adjustable lockbar clearances for wear compensation.

8.9.6 Machinery Drive Systems

Design machinery drive assemblies so that components are individually removable from the drive system without removal of other major components of the drive system.
Commentary: For example, a speed-reducer assembly can be removed by breaking flexible couplings at the power input and output ends of the speed-reducer.

8.9.7 Lubrication Provisions

A. Bridge system components requiring lubrication must be accessible without use of temporary ladders or platforms. Provide permanent walkways and stairwells to permit free access to regions requiring lubrication. Lubrication fittings must be visible, clearly marked and easily reached by maintenance personnel.

B. Designs for automatic lubrication systems must provide for storage of not less than three months supply of lubricant without refilling. Refill must be accomplished within a period of 15 minutes through a vandal-proof connection box located on the bridge sidewalk, clear of the roadway. Blockage of one traffic lane during this period is permitted.

8.9.8 Drive System Bushings

All bearing housings and bushings in open machinery drive and lock systems must utilize split-bearing housings and bushings and must be individually removable and replaceable without affecting adjacent assemblies.

8.9.9 Local Switching

A. Provide "Hand-Off-Automatic" switching capability for maintenance operations on traffic gate controllers and brakes and motors for center and tail-lock systems.

B. Provide "On-Off" switching capability for maintenance operations on span motor and machinery brakes, motor controller panels, and span motors.

C. Remote switches must be lockable for security against vandalism.

8.9.10 Service Accessibility

Provide a service area not less than 30-inches wide around system drive components.

8.9.11 Service Lighting and Receptacles

A. Provide lighting of machinery and electrical rooms as necessary to assure adequate lighting for maintenance of equipment, but with a minimum lighting level of 30 fc [300 Lux].

B. Provide switching so that personnel may obtain adequate lighting without leaving the work area for switching. Provide master switching from the control tower.

C. Provide each work area with receptacles for supplementary lighting and power tools such as drills, soldering and welding equipment.

8.9.12 Communications

Provide permanent communications equipment between the control tower and areas requiring routine maintenance (machinery drive areas, power and control panels locations traffic gates and waterway).

8.9.13 Wiring Diagrams

Provide wiring diagrams for each electrical panel inside the panel door. Enclose diagrams in glass or plastic of optical quality.

8.9.14 Diagnostic Reference Guide for Maintenance

Specify diagnostic instrumentation and system fault displays for mechanical and electrical systems. Malfunction information must be presented on a control system monitor located in the bridge control house. Data must be automatically recorded. System descriptive information, such as ladder diagrams and wiring data, must be available on the system memory to enable corrective actions on system malfunctions and to identify areas requiring preventative maintenance.

8.9.15 Navigation Lights

Specify dual lamps and transfer relays with two long-life, 130 volt, brass base, 100W lamps; or LED array of at least 12 particularly bright RED or GREEN LEDs symmetrically arranged around the lens focal point and with a minimum of 50,000 hour life on fenders and center of channel positions to reduce effort required for maintenance of navigation lights.

8.9.16 Working Conditions for Improved Maintainability

When specified by the Department, for either new or rehabilitated bascule bridge design, use enclosed machinery and electrical equipment areas. Air-condition areas containing electronic equipment to protect the equipment as required by the equipment manufacturer and the Mechanical/Electrical Section of the SDO.

8.9.17 Weatherproofing

New and rehabilitated bascule bridge designs must incorporate details to prevent water drainage and sand deposition into machinery areas. Avoid details that trap dirt and water; provide drain holes, partial enclosures, sloped floors, etc., to minimize trapping of water and soil.

Chapter 8 Movable Bridge Figures

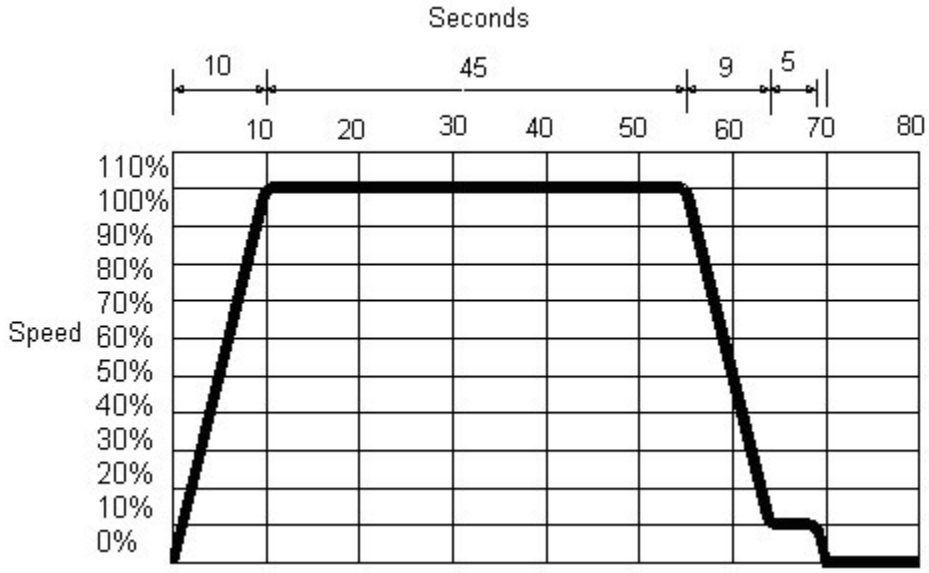

Figure 8-1
Speed Ramp

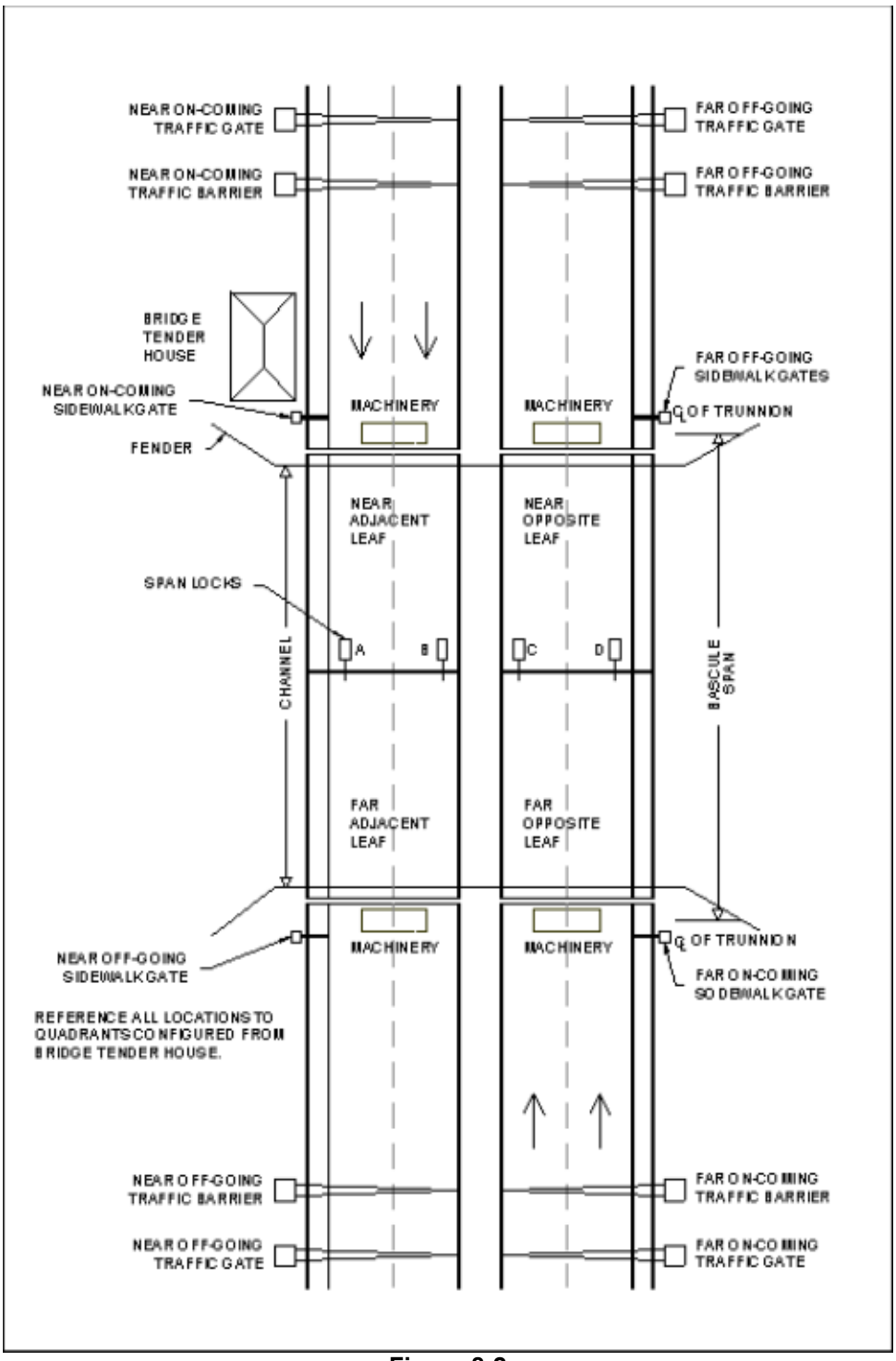

Figure 8-2
Movable Bridge Terminology

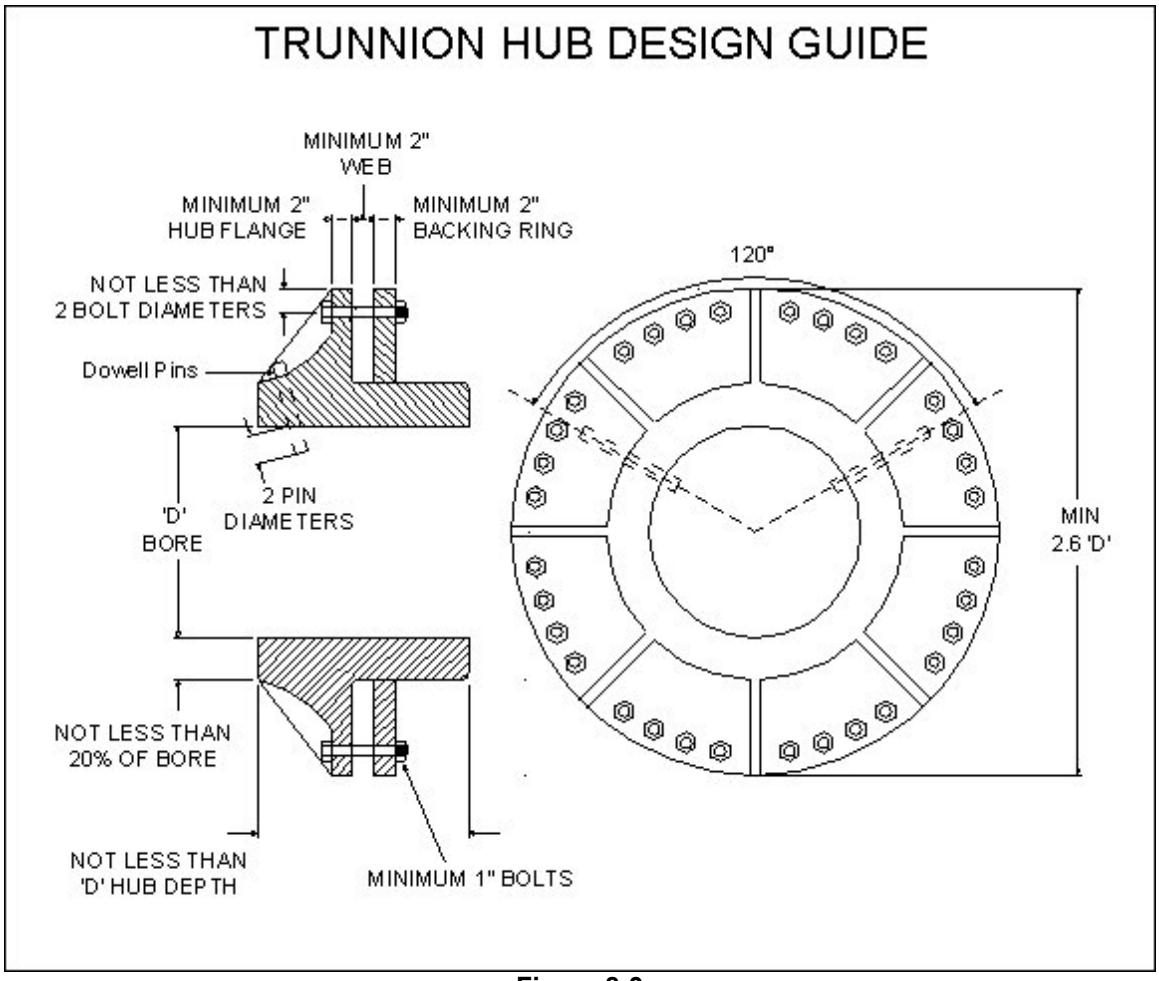

Figure 8-3
Trunnion Hubs

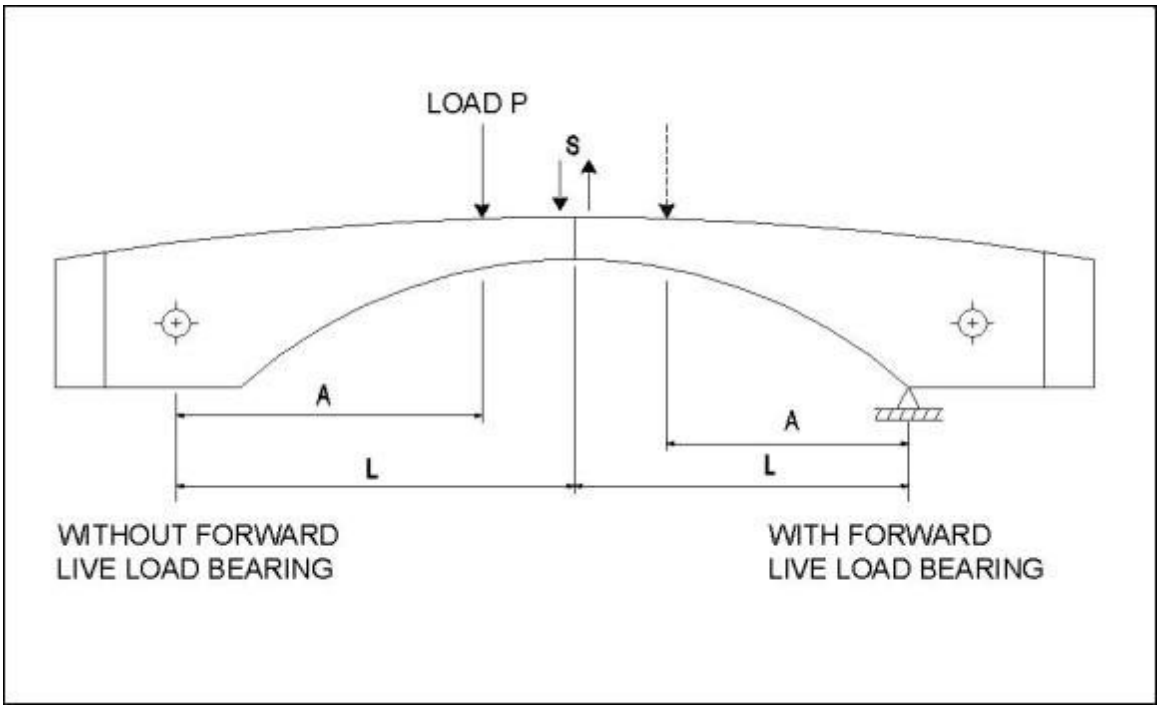

Figure 8-4
Lock Design Criteria

Chapter 9 BDR Cost Estimating

9.1 General

The purpose of the Bridge Development Report is to select the most cost efficient and appropriate structure type for the site under consideration. This chapter describes a three-step process to estimate bridge costs based on FDOT historical bid data. The first step is to utilize the average unit material costs to develop an estimate based on the completed preliminary design. The second step is to adjust the total bridge cost for the unique site conditions by use of the site adjustment factors. The third and final step is to review the computed total bridge cost on a cost per square foot basis and compare this cost against the historical cost range for similar structure types. This process should produce a reasonably accurate cost estimate. However, if a site has a set of odd circumstances, which will affect the bridge cost, account for these unique site conditions in the estimate. If the estimated cost is outside the cost range in step three, provide documentation supporting the variance in cost.

The three-step process described in this chapter is not suitable for cost estimating structure types without repeatable bid history. Estimates for unique structures such as movable, cable stayed, cast-in-place on form travelers, arches and tunnels should based on construction time, labor, materials, and equipment.

9.2 BDR Bridge Cost Estimating

The applicability of this three-step process is explained in the general section. The process stated below is developed for estimating the bridge cost after the completion of the preliminary design, which includes member selection, member size and member reinforcing. This process will develop costs for the bridge superstructure and substructure from beginning to end bridge. Costs for all other items including but not limited to the following are excluded from the costs provided in this chapter: mobilization, operation costs for existing bridge(s); removal of existing bridge or bridge fenders; lighting; walls; deck drainage systems; embankment; fenders; approach slabs; maintenance of traffic; load tests; bank stabilization.

Step One:
Utilizing the cost provided herein, develop the cost estimate for each bridge type under consideration.

9.2.1 Substructure

A. Prestressed Concrete Piling; cost per linear foot (furnished and installed)

Size of Piling	Driven Plumb or 1" Batter	Driven Battered
18-inch	$38	$47
24-inch	$53	$67
30-inch	$63	$80

When heavy mild steel reinforcing is used in the pile head, add $250.

When silica fume is used, add $6 per LF to the piling cost.

B. Steel Piling; cost per linear foot (furnished and installed)

14” x 73 H Section	$35
14” x 89 H Section	$38
20” Pipe Pile	$84

24" Pipe Pile	$90
30" Pipe Pile	$152

C. Drilled Shaft: total in-place cost per LF

	3 ft	4 ft	5 ft	6 ft	7 ft	8 ft	9 ft
On land with casing salvaged.	$239	$277	$340	$441	$542		
In water with casing salvaged.	$277	$302	$353	$479	$605	$806	
In water with permanent casing.	$428	$466	$554	$643	$781	$970	$1184

D. Sheet Piling Walls

Prestressed concrete; cost per linear foot.	10” x 30”	$71
	12” x 30”	$86
Steel; cost per square foot	Permanent Cantilever Wall	$20
	Temporary Cantilever Wall	$6

E. Cofferdam Footing (cofferdam and seal concrete)
Prorate the cost provided herein based on area and depth of water. A cofferdam footing having the following attributes will cost $328,000.
Area; 63 ft x 37.25 ft. Depth of seal; 5 ft. Depth of water over the footing; 16 ft.

F. Substructure Concrete; cost per cubic yard.

Concrete:	$550
Mass concrete:	$314
Seal concrete:	$344
Shell fill:	$5

For calcium nitrite, add $32 per cubic yard. (@4.5 gal per cubic yard).
For silica fume, add $25 per cubic yard. (@60 lbs. per cubic yard.)

G. Reinforcing Steel; cost per pound.....$0.46

9.2.2 Superstructure

A. Bearing Material

1.) Neoprene Bearing Pads:	$500 per Cubic Foot
2.) Multirotational Bearings, (Capacity in Kips)	Cost per Each
1-251	$3,465
251-500	$3,780
501-750	$4,410
751-1000	$5,040
1001-1250	$5,670
1251-1500	$6,300
1501-1750	$6,930
1751-2000	$7,875
>2000	$10,080

B. Steel Bridge Girders

1.) Structural Steel; Cost per pound (includes coating costs.)

Rolled wide flange sections	$.90
Plate girders; straight	$1.04
Plate girders; curved	$1.21
Box girders; straight	$1.32
Box girders; curved	$1.54

When uncoated weathering steel is used, reduce the price by $0.04 per pound. Inorganic zinc

coating systems have an expected life cycle of 20 years.

2.) Prestressed Concrete Girders; cost per linear foot.

AASHTO Type II	$80
AASHTO Type III	$86
AASHTO Type IV	$100
AASHTO Type V	$120
AASHTO Type VI	$130
FI Bulb Tee; 54”	$90
FI Bulb Tee; 63”	$98
FI Bulb Tee; 72”	$120
FI Bulb Tee (M); 78”	$135
78” Haunched units (CJ to CJ).	$380
FI Double Tee; 18”	$185
FI Double Tee; 24”	$200
FI Double Tee; 30”	$270
FI Inverted Tee; 16”	$50*
FI Inverted Tee; 20”	$56*
FI Inverted Tee; 24”	$62*
FI Inverted Tee; 16”	$50*
FI Tub (U-Beam); 48”	$300*
FI Tub (U-Beam); 54”	$330*
FI Tub (U-Beam); 63”	$370*
FI Tub (U-Beam); 72”	$400*
Solid Flat Slab (36’x15”)	$110
Solid Flat Slab (36’x18”)	$125

* Price is based on ability to furnish products without any conversions of casting beds and without purchasing of forms. If these conditions do not exist, add the following costs:

Inverted Tee	$202,000
FI Tub	$403,000

3.) Cast-in-Place Superstructure Concrete; cost per cubic yard.

Box Girder Concrete; straight	$650
Box Girder Concrete; curved	$675
Deck Concrete	$425

4.) Concrete for Pre-cast Segmental Box Girders; cantilever construction; price per cubic yard. For deck area between 300,000 and 500,000 interpolate between the stated cost per cubic yard.

≤300,000 SF	$693
≤500,000 SF	$567
>500,000 SF	$567

5.) Reinforcing Steel; cost per pound $0.46

6.) Post-tensioning Steel; cost per pound.

Strand; longitudinal	$1.53
Strand; transverse	$1.82
Bars	$3.90

7.) Railings and Barriers, cost per linear foot.

Traffic Barrier	$44
Pedestrian Railing	$57
Bicycle Railing	$69*

*For metal railing, add $38 per linear foot.

8.) Expansion joints; cost per linear foot.

Strip seal	$106
Finger joint <6”	$315
Finger joint >6”	$473
Modular 6”	$500
Modular 8”	$700
Modular 12”	$900

C. Retaining Walls.

1.) MSE Walls; Cost per square foot

Permanent	$23
Temporary	$8

D. Noise Wall; Cost per square foot.	$18
E. Detour Bridge; Cost per square foot	$10*

*Using FDOT supplied components. The cost is for the bridge proper and does not include approach work, surfacing, or guardrail.

9.2.3 Design Aid for Determination of Reinforcing Steel

In the absence of better information, use the following quantities of reinforcing steel per cubic yard of concrete.

Pile abutments	135
Pile Bents	145
Single Column Piers; Tall (>25 ft)	210
Single Column Piers; Short (<25 ft)	150
Multiple Column Piers; Tall (>25 ft)	215
Multiple Column Piers; Short (<25 ft)	195
Bascule Piers	110
Deck Slabs; Standard	205
Deck Slabs; Isotropic	125
Concrete Box Girders; Pier Segment	225
Concrete Box Girders; Typical Segment	165
Concrete Box Girders; Flat Slabs (30 ft x 15” deep)	220

Step Two:
After developing the total cost estimate utilizing the unit cost, modify the cost to account for site condition variables. If appropriate, the cost will be modified by the following variables:

1. For rural construction decrease construction cost by 6 percent.
2. For urban construction (Broward, Dade, Duval, Hillsborough, Orange, Palm Beach and Pinellas counties), increase construction cost by 6 percent.
3. For construction over water increase construction cost by 3 percent.
4. For phased construction (over traffic or construction requiring multiple phases to complete the entire cross section of the bridge), add a 20 percent premium to the affected units of the structure.

Step Three:
The final step is a comparison of the cost estimate with historic bridge cost per square foot data. These total cost numbers are calculated exclusively for the bridge cost as defined in the General Section of this chapter. Price computed by Steps 1 and 2 should be generally within the range of cost of as supplied herein. If the cost falls outside the provided range, good justification must be provided.

Bridge Superstructure Type	Total Cost per Square Foot
Reinforced Concrete Flat Slab; Simple Span	$50-65*
Reinforced Concrete Flat Slab; Continuous Span	$60-80*
Steel Deck/Girder; Simple Span	$62-75*
Steel Deck/Girder; Continuous Span	$70-90*
Prestressed Concrete Deck/Girder; Simple Span	$50-70*
Prestressed Concrete Deck/Girder; Continuous Span	$65-110*
Post-tensioned, cast-in-place Concrete Box Girder	
Cast on scaffolding; span length <=240 ft	$75-110
Steel Box Deck/Girder	
Span range from 150 ft to 280 ft.	$76-120
For curvature add a 15 percent premium	
Segmental Concrete Box Girders	
Span range from 150 ft to 280 ft	$80-110
Movable Bridges; bascule spans & piers	$900-1500
Demolition of existing bridges	
Typical	$9-15
Bascule spans & piers	$63

* Increase the cost by twenty percent for phased construction.

9.3 Historical Bridge Costs

The unadjusted bid cost for selected bridge projects are provided as a supplemental reference for estimating costs. The costs have been stripped of all supplemental items such as mobilization, so that only the superstructure and substructure cost remain.

9.3.1 Deck/Girder Bridges

Project Name and Description	Letting Date	Deck Area (SF)	Cost per SF
Jenson Beach Causeway (890145)	01/02	150,679 78” Bulb-tee, simple span	$59.00
SR 417/Turnpike (770616)	99/00	5,270 AASHTO Type VI	$50.39
US 98/Thomas Dr.(460111)	02/03	167,492, U-Beam	$66.50
SR 704 over I-95 (930183 & 930210)	97/98	14,804 each AASHTO Type IV Simple span	$60.66
SR 700 over C-51 (930465)	97/98	7,153 AASHTO Type II Simple Span	$46.46
SR 807 over C-51 (930474)	98/99	11,493 AASHTO Type III Simple Span	$48.77
SR 222 over I-75 (260101)	00/01	41,911 AASHTO Type III & IV	$63.59
SR 166 over Chipola River (530170)	00/01	31,598 AASHTO Type IV	$48.52

Project Name and Description	Letting Date	Deck Area (SF)	Cost per SF
SR 25 over Santa Fe River (260112)	00/01	17,118 AASHTO Type IV	$52.87
SR 71 over Cypress Creek (510062)	00/01	12,565 AASHTO Type III	$49.64
SR 10 over CSX RR (580175)	00/01	12,041 AASHTO Type IV	$54.91
SR 291 over Carpenter Creek (480194)	00/01	7,760 AASHTO Type IV	$59.41
SR 54 over Cypress Creek (140126)	00/01	6,010 AASHTO Type III	$51.48
SR 400 Overpass (750604)	00/01	27,084 AASHTO Type VI	$48.15
Palm Beach Airport Interchange over I-95 (930485)	99/00	9,763 Steel	$85.50
Turnpike Overpass (770604)	98/99	7,733 Steel 179' Simple Span	$79.20
SR 686 (150241)	99/00	63,387 Steel	$73.31
SR 30 RR Overpass (480195 & 480196)	00/01	6,994 each	$118.35

9.3.2 Post - tensioned Concrete Box Girder, Segmental Bridges

Project Name and Description	Letting Date	Deck Area (SF)	Cost per SF
A1A over ICWW (St. Lucie River) (Evans Crary) (890158)	97/98	297,453 Span by Span	$80.50
Palm Beach Airport Interchange at I-95 (930480)	99/00	77,048 Balanced Cantilever	$100.73
Palm Beach Airport Interchange at I-95 (930477)	99/00	20,925 Balanced Cantilever	$96.31
Palm Beach Airport Interchange at I-95 (930479)	99/00	69,233 Balanced Cantilever	$88.49
Palm Beach Airport Interchange at I-95 (930482)	99/00	47,466 Balanced Cantilever	$104.96
Palm Beach Airport Interchange at I-95 (930482)	99/00	81,059 Balanced Cantilever	$101.44
Palm Beach Airport Interchange at I-95 (930483)	99/00	90,926 Balanced Cantilever	$101.57
Palm Beach Airport Interchange at I-95 (930484)	99/00	41,893 Balanced Cantilever	$115.11
Palm Beach Airport Interchange at I-95 (930478)	99/00	20,796 Balanced Cantilever	$95.16
17th Street over ICWW (Ft. Lauderdale) (860623)	96/97	135,962 Balanced Cantilever	$74.71
SR 704 over ICWW	00/01	43,173 each	$163.88

Project Name and Description	Letting Date	Deck Area (SF)	Cost per SF
Royal Palm Way (930507 & 930506)		C-I-P on Travelers	
US 92 over ICWW (Broadway Bridge) Daytona (790188)	97/98	145,588 Balanced Cantilever	$81.93
US 92 over ICWW (Broadway Bridge) Daytona (790187)	97/98	145,588 Balanced Cantilever	$81.93
SR 789 over ICWW (Ringling Bridge) (170021)	00/01	329,096 Balanced Cantilever	$81.43
US 98 over ICWW (Hathaway Bridge) (460012)	00/01	575,731 Balanced Cantilever	$87.72

9.3.3 Post-tensioned Cast-in-place Concrete Box Girder Bridge (low level overpass)

Project Name and Description	Letting Date	Deck Area (SF)	Cost per SF
SR 858 over ICWW Hallandale Beach (860619 & 860618)	97/98	29,888 each	$83.25
SR 858 Flyover Hallandale Beach (860620)	97/98	21,777	$81.99
4th Street over I-275	94/95	12,438	$75.21

9.3.4 Bascule Bridge Cost

Deck area is calculated to be coping-to-coping width times overall bascule length including both bascule pier lengths and main span. Costs include all cost for moveable span, gates and bascule piers.

Closed Deck Bascule Bridges

Project Name and Description	Letting Date	Deck Area (SF)	Cost per SF
SR 45 over ICWW Venice (170170 & 170169)	99/00	8,785 each	$768
Royal Palm Way SR 704 over ICWW (930507 & 930506)	00/01	11,535 each	$1089
SR 858 over ICWW Hallandale Beach (860618 & 860619)	97/98	14,454 each	$811
Ocean Ave. over ICWW Boynton Beach (930105)	98/99	11,888	$1157
17th Street over ICWW Ft. Lauderdale (860623)	96/97	34,271	$865
2nd Avenue over Miami River (874264)	99/00	29,543	$1080