LRFD Design Example #1:

Prestressed Precast Concrete Beam Bridge Design

Click here for Table of Contents

HDR | ONE COMPANY *Many Solutions*℠
2202 N. West Shore Blvd., Suite 250
Tampa, FL 33607
(813) 282-2300

Table of Contents

Cover

Section 1: Project Information

1.01 About this Design Example
1.02 General Notes
1.03 Design Parameters

Section 2: Superstructure Design

2.01 Dead Loads
2.02 Live Load Distribution Factors
2.03 Live Load Analysis
2.04 Prestressed Beam Design - Part I
2.05 Prestressed Beam Design - Part II
2.06 Empirical Deck Design
2.07 Traditional Deck Design
2.08 Deck Overhang Design
2.09 Creep and Shrinkage Parameters
2.10 Expansion Joint Design
2.11 Composite Neoprene Bearing Pad Design

Section 3: Substructure Design

3.01 Dead Loads
3.02 Pier Cap Live Load Analysis
3.03 Pier Cap Design Loads
3.04 Pier Cap Design
3.05 Pier Column Live Load Analysis
3.06 Pier Column Design Loads
3.07 Pier Column Design
3.08 Pier Foundation Design Loads
3.09 Pier Pile Vertical Load Design
3.10 Pier Footing Design
3.11 End Bent Cap Live Load Analysis
3.12 End Bent Cap Design Loads
3.13 End Bent Cap Design *(similar to Section 3.4)*
3.14 End Bent Pile Vertical Load Design *(similar to Section 3.9)*
3.15 End Bent Backwall Design

About this Design Example

Description

This document provides guidance for the design of a precast, prestressed beam bridge utilizing the AASHTO LRFD Bridge Design Specifications.

The example includes the following component designs:

- Empirical deck design
- Traditional deck design
- Prestressed beam design
- Composite Neoprene bearing pad design
- Multi-column pier design
- End bent design

The following assumptions have been incorporated in the example:

- Two simple spans @ 90'-0" each, 30 degree skew.
- Minor horizontal curvature
- Multi-column pier on prestressed concrete piles.
- No phased construction.
- Two traffic railing barriers and one median barrier.
- No sidewalks.
- Permit vehicles are not considered.
- Design for jacking is not considered.
- Load rating is not addressed.

Since this example is presented in a **Mathcad** document, a user can alter assumptions, constants, or equations to create a customized application.

Standards

The example utilizes the following design standards:

- Florida Department of Transportation Standard Specifications for Road and Bridge Construction (2000 edition) and applicable modifications.
- AASHTO LRFD Bridge Design Specifications, 2nd Edition, 2002 Interims.
- Florida Department of Transportation Structures LRFD Design Guidelines, January 2003 Edition.
- Florida Department of Transportation Structures Detailing Manual for LRFD, 1999 Edition.

Defined Units

All calculations in this electronic book use U.S. customary units. The user can take advantage of Mathcad's unit conversion capabilities to solve problems in MKS or CGS units. Although Mathcad has several built-in units, some common structural engineering units must be defined. For example, a lbf is a built-in Mathcad unit, but a kip or ton is not. Therefore, a kip and ton are globally defined as:

$kip \equiv 1000 \cdot lbf$ $\qquad$ $ton \equiv 2000 \cdot lbf$

Definitions for some common structural engineering units:

$N \equiv newton$ $\qquad$ $kN \equiv 1000 \cdot newton$

$plf \equiv \frac{lbf}{ft}$ $\qquad$ $psf \equiv \frac{lbf}{ft^2}$

$pcf \equiv \frac{lbf}{ft^3}$ $\qquad$ $psi \equiv \frac{lbf}{in^2}$

$klf \equiv \frac{kip}{ft}$ $\qquad$ $ksf \equiv \frac{kip}{ft^2}$

$ksi \equiv \frac{kip}{in^2}$ $\qquad$ $°F \equiv 1deg$

$MPa \equiv 1 \cdot 10^6 \cdot Pa$ $\qquad$ $GPa \equiv 1 \cdot 10^9 \cdot Pa$

Acknowlegements

The Tampa office of HDR Engineering, Inc. prepared this document for the Florida Department of Transportation.

Notice

The materials in this document are only for general information purposes. This document is not a substitute for competent professional assistance. Anyone using this material does so at his or her own risk and assumes any resulting liability.

General Notes

Design Method..... Load and Resistance Factor Design (LRFD) except that the Prestressed Beams and Prestressed Piles have been designed for Service Load.

Design Loading..... HL-93 Truck

Future Wearing Surface... Design provides allowance for 15 psf

Earthquake..... Seismic acceleration coefficient in Florida varies from 1% to 3.75% or Seismic provisions for minimum bridge support length only, SDG 2.3.

Concrete.....

Class	Minimum 28-day Compressive Strength (psi)	Location
II	f`c = 3400	Traffic Barriers
II (Bridge Deck)	f`c = 4500	CIP Bridge Deck
IV	f`c = 5500	CIP Substructure
V (Special)	f`c = 6000	Concrete Piling
V	f`c = 6500	Prestressed Beams

Environment..... The superstructure is classified as slightly aggressive.
The substructure is classfied as moderately aggressive.

Reinforcing Steel..... ASTM A615, Grade 60

Concrete Cover.....

Superstructure	
Top deck surfaces	2" (Short bridge)
All other surfaces	2"
Substructure	
External surfaces exposed	3"
External surfaces cast against earth	4"
Prestressed Piling	3"
Top of Girder Pedestals	2"

Concrete cover does not include reinforcement placement or fabrication tolerances, unless shown as "minimum cover". See FDOT Standard Specifications for allowable reinforcement placement tolerances.

Distribution Values.....

Item	Interior Beams	Exterior Beams
Live Load (**/beam)	*	*
Traffic Railing (plf)	*	*
Wearing Surface (plf)	*	*
Utilities (plf)	*	*
Stay-In-Place Metal Forms (plf)	*	*

Dimensions..... All dimensions are in feet or inches, except as noted.

Stay-in-Place Metal Forms..... The design includes an allowance of 20 psf for the unit weight of metal forms and concrete required to fill the form flutes. The allowance is distributed over the project plan area of the metal forms. Stay-in-place concrete forms will not be permitted.

Design Parameters

Description

This section provides the design input parameters necessary for the superstructure and substructure design.

Page Contents

Page	Contents
5	**A. General Criteria**
	A1. Bridge Geometry
	A2. Number of Lanes
	A3. Concrete, Reinforcing and Prestressing Steel Properties
9	**B. LRFD Criteria**
	B1. Dynamic Load Allowance [LRFD 3.6.2]
	B2. Resistance Factors [LRFD 5.5.4.2]
	B3. Limit States [LRFD 1.3.2]
11	**C. Florida Criteria**
	C1. Chapter 1 - General requirements
	C2. Chapter 2 - Loads and Load Factors
	C3. Chapter 4 - Superstructure Concrete
	C4. Chapter 6 - Superstructure Components
	C5. Miscellaneous
19	**D. Substructure**
	D1. End Bent Geometry
	D2. Pier Geometry
	D3. Footing Geometry
	D4. Pile Geometry
	D5. Approach Slab Geometry
	D6. Soil Properties

A. General Criteria

This section provides the general layout and input parameters for the bridge example.

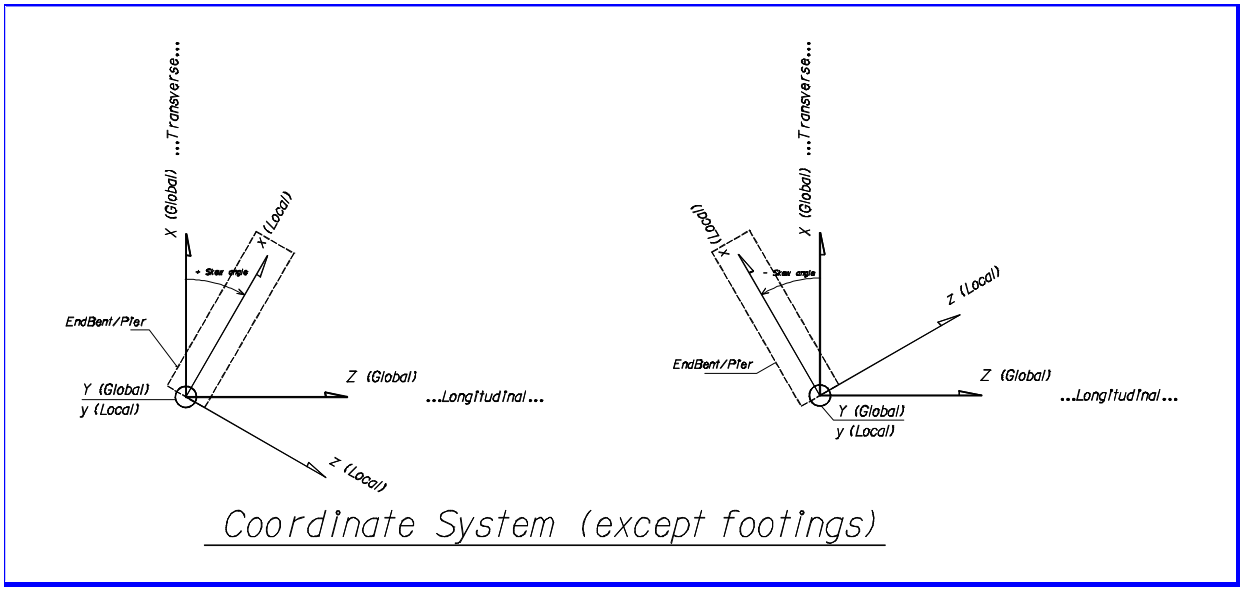

A1. Bridge Geometry

Horizontal Profile

A slight horizontal curvature is shown in the plan view. This curvature is used to illustrate centrifugal forces in the substructure design. For all other component designs, the horizontal curvature will be taken as zero.

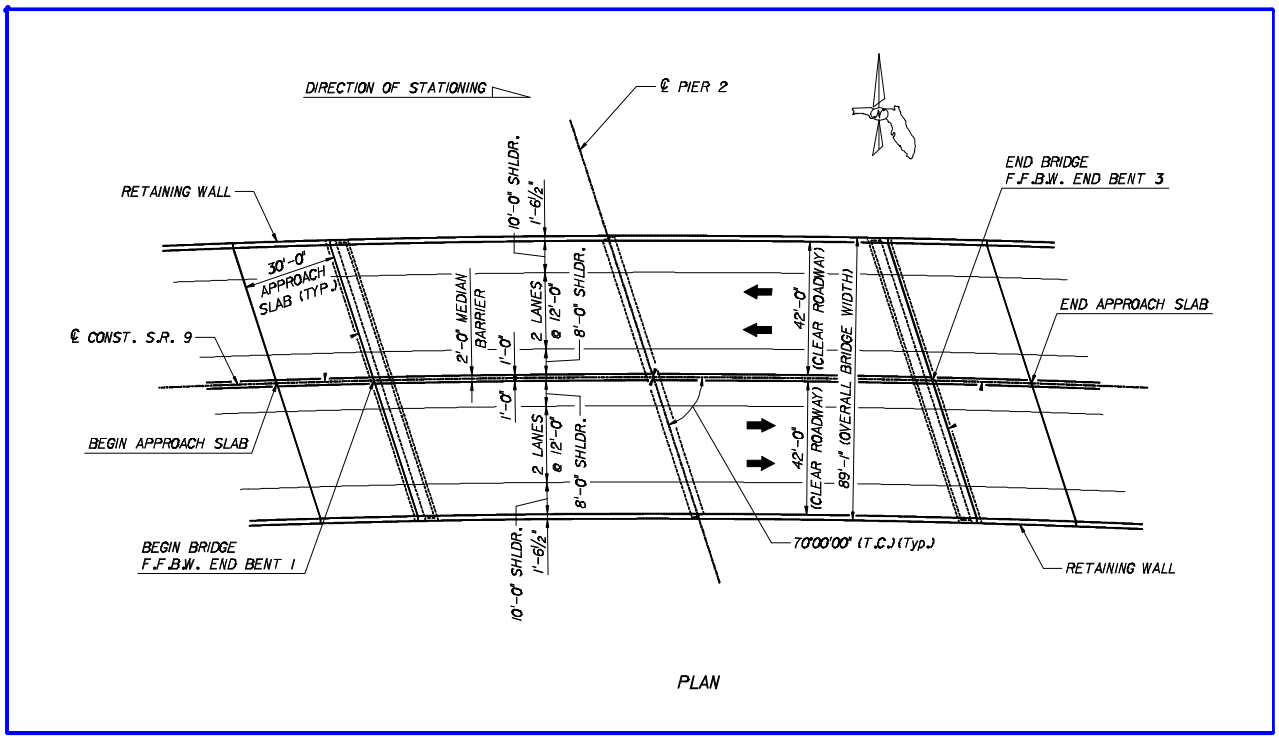

HORIZONTAL CURVE DATA

R = 3,800'

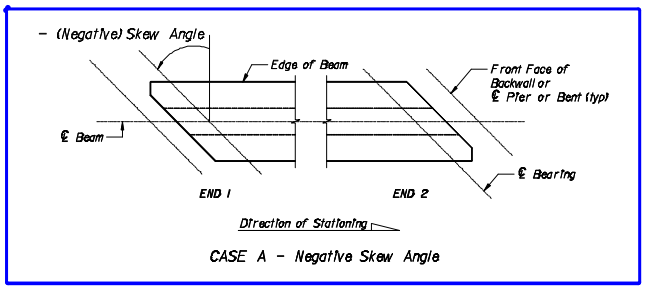

In addition, the bridge is also on a skew which is defined as:

Skew angle..... Skew := –30deg

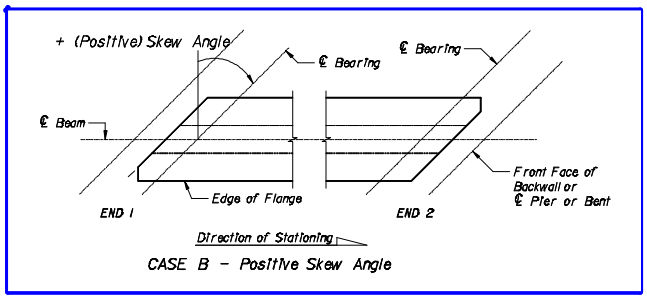

Vertical Profile

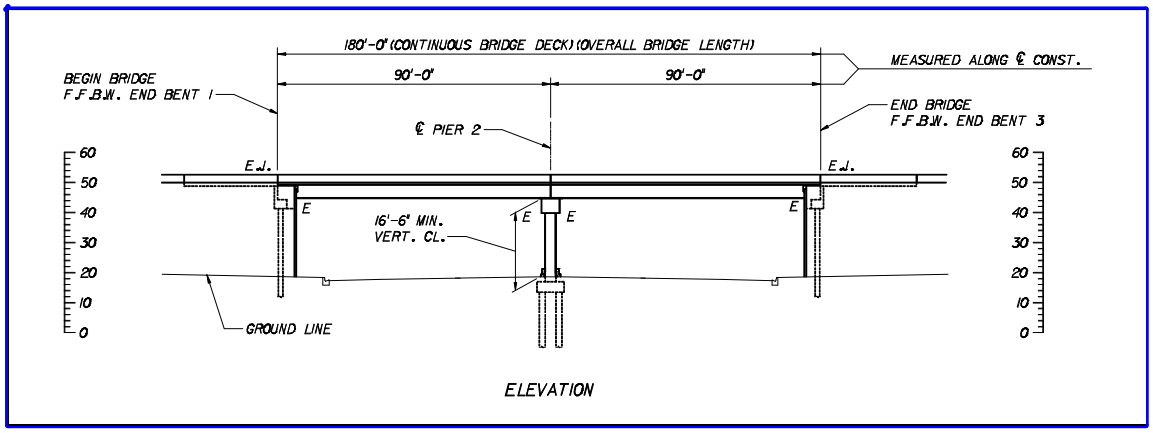

Overall bridge length..... $L_{bridge} \equiv 180 \cdot ft$

Bridge design span length..... $L_{span} := 90 \cdot ft$

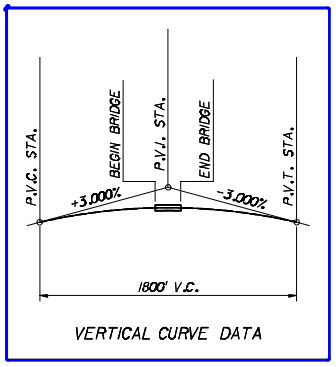

Typical Cross-secton

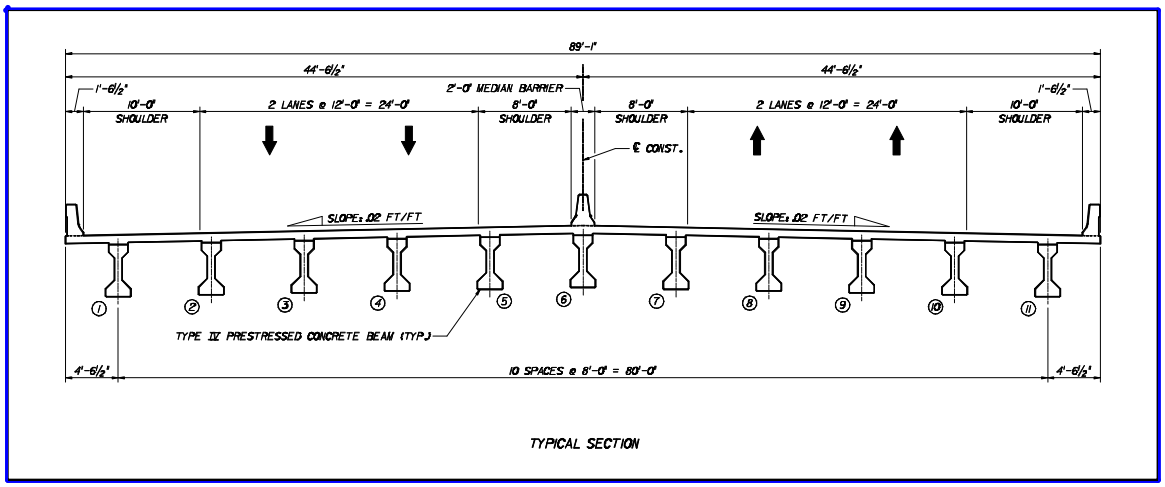

Superstructure Beam Type
("II" "III" "IV" "V" "VI"). $BeamType := \text{"IV"}$

Number of beams..... $N_{beams} := 11$

Beam Spacing..... $BeamSpacing := 8 \cdot ft$

Deck overhang at End Bent
and Pier..... $Overhang := 4ft + 6.5in$

Average buildup..... $h_{buildup} := 1in$

Diaphragm Thickness..... $t_{diap} := 9 \cdot in$

A2. Number of Lanes

Design Lanes

Current lane configurations show two striped lanes per roadway with a traffic median barrier separating the roadways. Using the roadway clear width between barriers, $Rdwy_{width}$, the number of design traffic lanes per roadway, N_{lanes}, can be calculated as:

Roadway clear width..... $Rdwy_{width} := 42 \cdot ft$

Number of design traffic lanes
per roadway..... $N_{lanes} := \text{floor}\left(\frac{Rdwy_{width}}{12 \cdot ft}\right)$

$N_{lanes} = 3$

Substructure Design

In order to maximize the design loads of the substructure components, e.g. pier cap negative moment, pier columns, footing loads, etc., HL-93 vehicle loads were placed on the deck. In some cases, the placement of the loads ignored the location of the median traffic barrier. This assumption is considered to be conservative.

Braking forces

The bridge is NOT expected to become one-directional in the future. Future widening is expected to occur to the outside if additional capacity is needed. Therefore, for braking force calculations, $N_{lanes} = 3$.

The designer utilized engineering judgement to ignore the location of the median barrier for live load placement for the substructure design and NOT ignore the median barrier for braking forces. The designer feels that the probability exists that the combination of lanes loaded on either side of the median barrier exists. However, this same approach was not used for the braking forces since these loaded lanes at either side of the median traffic barrier will NOT be braking in the same direction.

A3. Concrete, Reinforcing and Prestressing Steel Properties

Unit weight of concrete..... $\gamma_{conc} := 150 \cdot pcf$

Modulus of elasticity for reinforcing steel..... $E_s := 29000 \cdot ksi$

Ultimate tensile strength for prestressing tendon..... $f_{pu} := 270 \cdot ksi$

Modulus of elasticity for prestressing tendon..... $E_p := 28500 \cdot ksi$

B. LRFD Criteria

The bridge components are designed in accordance with the following LRFD design criteria:

B1. Dynamic Load Allowance [LRFD 3.6.2]

An impact factor will be applied to the static load of the design truck or tandem, except for centrifugal and braking forces.

Impact factor for fatigue and fracture limit states..... $IM_{fatigue} := 1 + \frac{15}{100}$

Impact factor for all other limit states..... $IM := 1 + \frac{33}{100}$

B2. Resistance Factors [LRFD 5.5.4.2]

Flexure and tension of reinforced concrete..... $\phi := 0.9$

Flexure and tension of prestressed concrete..... $\phi' := 1.00$

Shear and torsion of normal weight concrete..... $\phi_v := 0.90$

B3. Limit States [LRFD 1.3.2]

The LRFD defines a limit state as a condition beyond which the bridge or component ceases to satisfy the provisions for which it was designed. There are four limit states prescribed by LRFD. These are as follows:

STRENGTH LIMIT STATE

Load combinations which ensures that strength and stability, both local and global, are provided to resist the specified load combinations that a bridge is expected to experience in its design life. Extensive distress and structural damage may occur under strength limit state, but overall structural integrity is expected to be maintained.

EXTREME EVENT LIMIT STATES

Load combinations which ensure the structural survival of a bridge during a major earthquake or flood, or when collided by a vessel, vehicle, or ice flow, possibly under scoured conditions. Extreme event limit states are considered to be unique occurrences whose return period may be significantly greater than the design life of the bridge.

SERVICE LIMIT STATE

Load combinations which place restrictions on stress, deformation, and crack width under regular service conditions.

FATIGUE LIMIT STATE

Load combinations which place restrictions on stress range as a result of a single design truck. It is

intended to limit crack growth under repetitive loads during the design life of the bridge.

Table 3.4.1-1 - Load Combinations and Load Factors

Load Combination	DC DD DW	LL IM CE	WA	WS	WL	FR	TU CR SH	TG	SE	Use One of These at a Time			
Limit State	EH EV ES	BR PL LS								EQ	IC	CT	CV
Strength I	y_p	1.75	1.00	-	-	1.00	0.50/1.20	y_{TG}	y_{SE}	-	-	-	-
Strength II	y_p	1.35	1.00	-	-	1.00	0.50/1.20	y_{TG}	y_{SE}	-	-	-	-
Strength III	y_p	-	1.00	1.40	-	1.00	0.50/1.20	y_{TG}	y_{SE}	-	-	-	-
Strength IV EH, EV, ES, DW, and DC ONLY	y_p 1.5	-	1.00	-	-	1.00	0.50/1.20	-	-	-	-	-	-
Strength V	y_p	1.35	1.00	0.40	0.40	1.00	0.50/1.20	y_{TG}	y_{SE}	-	-	-	-
Extreme Event I	y_p	y_{EQ}	1.00	-	-	1.00	-		-	1.00	-	-	-
Extreme Event II	y_p	0.50	1.00	-	-	1.00	-		-	-	1.00	1.00	1.00
Service I	1.00	1.00	1.00	0.30	1.00	1.00	1.00/1.20	y_{TG}	y_{SE}	-	-	-	-

Table 3.4.1-2 - Load factors for permanent loads, y_p

Type of Load	Load Factor Maximum	Load Factor Minimum
DC: Component and Attachments	1.25	0.90
DD: Downdrag	1.80	0.45
DW: Wearing Surfaces and Utilities	1.50	0.65
EH: Horizontal Earth Pressure		
• Active	1.50	0.90
• At-Rest	1.35	0.90
EL: Locked-in Erection Stresses	1.00	1.00
EV: Vertical Earth Pressure		
• Overall Stability	1.00	N/A
• Retaining Walls and Abutments	1.30	0.90
• Rigid Buried Structure	1.35	0.90
• Rigid Frames	1.95	0.90
• Flexible Buried Structures other than Metal Box Culverts • Flexible Metal Box Culverts	1.50	0.90
ES: Earth Surcharge	1.50	0.75

C. FDOT Criteria

C1. Chapter 1 - General Requirements

General [SDG 1.1]

The design life for bridge structures is 75 years.

Approach slabs are considered superstructure component.

Class II Concrete (Bridge Deck) will be used for all environmental classifications.

Criteria for Deflection and Span-to-Depth Ratios [SDG 1.2]

This provision is not applicable, since no pedestrian loading is applied in this bridge design example.

Concrete and Environment [SDG 1.3]

The concrete cover for the deck is based on either the environmental classification **[SDG 1.4]** or the type of bridge **[SDG 4.2.1]**.

Concrete cover for the deck..

$cover_{deck} = 2\,in$

$$cover_{deck} := \begin{cases} 2 \cdot in & \text{if } L_{bridge} < 300ft \\ 2.5 \cdot in & \text{otherwise} \end{cases}$$

Concrete cover for substructure not in contact with water.....

$cover_{sub} = 3\,in$

$$cover_{sub} := \begin{cases} 4 \cdot in & \text{if } Environment_{sub} = \text{"Extremely"} \\ 3 \cdot in & \text{otherwise} \end{cases}$$

Concrete cover for substructure in contact with water.....

$cover_{sub.earth} = 4\,in$

$$cover_{sub.earth} := \begin{cases} 4.5 \cdot in & \text{if } Environment_{sub} = \text{"Extremely"} \\ 4 \cdot in & \text{otherwise} \end{cases}$$

Minimum 28-day compressive strength of concrete components.....

Class		Location
II (Bridge Deck)	CIP Bridge Deck Approach Slabs	$f_{c.slab} := 4.5 \cdot ksi$
IV	CIP Substructure	$f_{c.sub} := 5.5 \cdot ksi$
V (Special)	Concrete Piling	$f_{c.pile} := 6.0 \cdot ksi$
V	Prestressed Beams	$f_{c.beam} := 6.5 \cdot ksi$

Environmental Classifications [SDG 1.4]

The environment can be classified as either "Slightly", "Moderately" or "Extremely" agressive.

Environmental classification for superstructure..... $Environment_{super} \equiv$ "Slightly"

Environmental classification for substructure..... $Environment_{sub} \equiv$ "Moderately"

C2. Chapter 2 - Loads and Load Factors

Dead loads [SDG 2.2]

Weight of future wearing surface.....

$$\rho_{fws} := \begin{cases} 15 \cdot psf & \text{if } L_{bridge} < 300ft \\ 0 \cdot psf & \text{otherwise} \end{cases}$$

$\rho_{fws} = 15\,psf$

Weight of sacrificial milling surface, using $t_{mill} = 0\,in$.....

$$\rho_{mill} := t_{mill} \cdot \gamma_{conc}$$

$\rho_{mill} = 0\,psf$

*(**Note**: See Sect. C3 [SDG 4.2] for calculation of t_{mill}).*

Seismic Provisions [SDG 2.3]

Seismic provisions for minimum bridge support length only.

Wind Loads [SDG 2.4]

The LRFD wind pressures should be increased by 20% for bridges located in Palm Beach, Broward, Dade, and Monroe counties..... $\gamma_{FDOT} := 1.20$

Miscellaneous Loads [SDG 2.5]

ITEM	UNIT	LOAD
Traffic Railing Barrier (32 " F-Shape)	Lb / ft	421
Traffic Railing Median Barrier, (32" F- Shape)	Lb / ft	486
Traffic Railing Barrier (42 " Vertical Shape)	Lb / ft	587
Traffic Railing Barrier (32 " Vertical Shape)	Lb / ft	385
Traffic Railing Barrier (42 " F-Shape)	Lb / ft	624
Traffic Railing Barrier / Soundwall (Bridge)	Lb / ft	1008
Concrete, Structural	Lb / ft ^{3}	150
Future Wearing Surface	Lb / ft ^{2}	15 *
Soil, Compacted	Lb / ft ^{3}	115
Stay-in-Place Metal Forms	Lb / ft ^{2}	20 **

* The Future Wearing Surface allowance applies only to minor widenings or short bridges as defined in SDG Chapter 7.
** Unit load of metal forms and concrete required to fill the form flutes to be applied over the projected plan area of the metal forms

Weight of traffic railing barrier..... $w_{barrier} := 421 \cdot plf$

Weight of traffic railing median barrier..... $w_{median.bar} := 486 \cdot plf$

Weight of compacted soil..... $\gamma_{soil} := 115 \cdot pcf$

Weight of stay-in-place metal forms..... $\rho_{forms} := 20 \cdot psf$

Barrier / Railing Distribution for Beam-Slab Bridges [SDG 2.8]

SDG equations for dead load of barriers applied to the exterior beams.....

$$w_{ext} = \frac{W \cdot (C_1 \cdot C_2)}{100}$$

$$C_1 = 0.257 \cdot \sqrt{\left[S^3 \cdot (3 \cdot K - 8)\right]} + \frac{(10 - K)^2 + 39}{1.4}$$

$$C_2 = 2.2 - 0.335 \cdot \left(\frac{L}{10}\right) + 0.0279 \cdot \left(\frac{L}{10}\right)^2 - 0.000793 \cdot \left(\frac{L}{10}\right)^3$$

Maximum number of beams in a span.....

$K := \text{if}(N_{beams} > 10, 10, N_{beams})$

$K = 10$

Applying the SDG equations to this design example, the following values are calculated.....

$$C_1 := 0.257 \cdot \sqrt{\left[\left(\frac{BeamSpacing}{ft}\right)^3 \cdot (3 \cdot K - 8)\right]} + \frac{(10 - K)^2 + 39}{1.4}$$

$C_1 = 55.1$

...and.....

$$C_2 := 2.2 - 0.335 \cdot \left(\frac{L_{span}}{10 \cdot ft}\right) + 0.0279 \cdot \left(\frac{L_{span}}{10 \cdot ft}\right)^2 - 0.000793 \cdot \left(\frac{L_{span}}{10 \cdot ft}\right)^3$$

$C_2 = 0.867$

Dead load of barriers applied to the exterior beams.....

$$w_{barrier.exterior} := \frac{w_{barrier} \cdot (C_1 \cdot C_2)}{100}$$

$w_{barrier.exterior} = 0.201\ klf$

Dead load of barriers applied to the interior beams.....

$$w_{barrier.interior} := \frac{2 \cdot (w_{barrier} - w_{barrier.exterior})}{(K - 2)}$$

$w_{barrier.interior} = 0.055\ \frac{kip}{ft}$

Median traffic barrier

For purposes of this design example, the median traffic barrier will be equally distributed amongst all the beams comprising the superstructure.

Include the dead load of the median traffic barrier on the design load of the exterior beams.....

$$w_{barrier.exterior} := w_{barrier.exterior} + \frac{w_{median.bar}}{N_{beams}}$$

$w_{barrier.exterior} = 0.245\,klf$

Include the dead load of the median traffic barrier on the design load of the interior beams.....

$$w_{barrier.interior} := w_{barrier.interior} + \frac{w_{median.bar}}{N_{beams}}$$

$w_{barrier.interior} = 0.099\,klf$

C3. Chapter 4 - Superstructure Concrete

General [SDG 4.1]

Correction factor for Florida limerock coarse aggregate.....

$\phi_{limerock} := 0.9$

Unit Weight of Florida limerock concrete.....

$w_{c.limerock} := 145 \cdot pcf$

Modulus of elasticity for slab.....

$E_{c.slab} := \phi_{limerock} \cdot \left(1820 \cdot \sqrt{f_{c.slab} \cdot ksi}\right)$

$E_{c.slab} = 3475\,ksi$

Modulus of elasticity for beam.....

$E_{c.beam} := \phi_{limerock} \cdot \left(1820 \cdot \sqrt{f_{c.beam} \cdot ksi}\right)$

$E_{c.beam} = 4176\,ksi$

Modulus of elasticity for substructure.....

$E_{c.sub} := \phi_{limerock} \cdot \left(1820 \cdot \sqrt{f_{c.sub} \cdot ksi}\right)$

$E_{c.sub} = 3841\,ksi$

Modulus of elasticity for piles.....

$E_{c.pile} := \phi_{limerock} \cdot \left(1820 \cdot \sqrt{f_{c.pile} \cdot ksi}\right)$

$E_{c.pile} = 4012\,ksi$

Yield strength of reinforcing steel.....

$f_y := 60 \cdot ksi$

Note: Epoxy coated reinforcing not allowed on FDOT projects.

Concrete Deck Slabs [SDG 4.2]

Bridge length definition.....

$BridgeType := \begin{cases} \text{"Short"} & \text{if } L_{bridge} < 300ft \\ \text{"Long"} & \text{otherwise} \end{cases}$

$BridgeType = \text{"Short"}$

Thickness of sacrificial milling surface.....

$t_{mill} \equiv \begin{pmatrix} \begin{cases} 0 \cdot in & \text{if } L_{bridge} < 300ft \\ 0.5 \cdot in & \text{otherwise} \end{cases} \end{pmatrix}$

$t_{mill} = 0\ in$

Deck thickness.....

$t_{slab} \equiv 8.0 \cdot in$

Deck Slab Design [SDG 4.2.4]

The empirical or traditional design method is used to design the deck slab for the service, fatigue, fracture, and strength limit states. The empirical design method may be used if the deck overhang is less than 6 feet. Otherwise, the traditional design method shall be used.

$SlabOverhang_{max} := \begin{cases} \text{"May use empirical design"} & \text{if } Overhang \le 6ft \\ \text{"Shall use traditional design"} & \text{otherwise} \end{cases}$

$SlabOverhang_{max} = \text{"May use empirical design"}$

The deck overhang shall be designed using the traditional design method. The deck overhangs are designed for three limit state conditions:

(1) Extreme event limit state - Transverse and longitudinal vehicular collision forces.
(2) Extreme event limit state - Vertical collision forces
(3) Strength limit state - Equivalent line load, DL + LL

The deck slab at the median barrier shall be designed using the traditional design method. For the extreme event limit states, a minimum area of steel of $0.40 \cdot in^2$ per foot should be provided in the top of the deck slab. The summation of the area of steel for the top and bottom of the deck slab should provide a minimum of $0.80 \cdot in^2$ per foot.

Prestressed, Pretensioned Components [SDG 4.3] *(**Note**: Compression = +, Tension = -)*

Minimum compressive concrete strength at release is the greater of 4.0 ksi or 0.6 f'c.....

$f_{ci.beam.min} := \max(4.0 \cdot ksi, 0.6 \cdot f_{c.beam})$

$f_{ci.beam.min} = 4\ ksi$

Maximum compressive concrete strength is 0.8 f'c...

$f_{ci.beam.max} := 0.8 \cdot f_{c.beam}$

$f_{ci.beam.max} = 5.2\ ksi$

Any value between the minimum and maximum may be selected for the design.

Minimum compressive concrete strength at release.... $f_{ci.beam} := f_{ci.beam.min}$

$f_{ci.beam} = 4\,ksi$

Corresponding modulus of elasticity..... $E_{ci.beam} := \phi_{limerock} \cdot 1820 \cdot \sqrt{f_{ci.beam} \cdot ksi}$

$E_{ci.beam} = 3276\,ksi$

Limits for tension in top of beam at release (straight strand only)

Outer 15 percent of design beam..... $f_{top.outer15} := -12 \cdot \sqrt{f_{ci.beam} \cdot psi}$

$f_{top.outer15} = -0.76\,ksi$

Center 70 percent of design beam..... $f_{top.center70} := -6 \cdot \sqrt{f_{ci.beam} \cdot psi}$

$f_{top.center70} = -0.38\,ksi$

Time-dependent variables for creep and shrinkage calculations

Relative humidity..... $H := 75$

Age (days) of concrete when load is applied..... $T_0 := 1$

Age (days) of concrete when section becomes composite..... $T_1 := 120$

Age (days) of concrete used to determine long term losses..... $T_2 := 10000$

C4. Chapter 6 - Superstructure Components

Temperature Movement [SDG 6.3]

Structural Material of Superstructure	Temperature (Degrees Fahrenheit)			
	Mean	High	Low	Range
Concrete Only	70	95	45	50
Concrete Deck on Steel Girder	70	110	30	80
Steel Only	70	120	30	90

The temperature values for "Concrete Only" in the preceding table apply to this example.

Temperature mean..... $t_{mean} := 70 \cdot °F$

Temperature high..... $t_{high} := 95 \cdot °F$

Temperature low..... $t_{low} := 45 \cdot °F$

Temperature rise..... $\Delta t_{rise} := t_{high} - t_{mean}$

$\Delta t_{rise} = 25\,°F$

Temperature fall..... $\Delta t_{fall} := t_{mean} - t_{low}$

$\Delta t_{fall} = 25\,°F$

Coefficient of thermal expansion **[LRFD 5.4.2.2]** for normal weight concrete..... $\alpha_t := \frac{6 \cdot 10^{-6}}{°F}$

Expansion Joints [SDG 6.4]

Joint Type	Maximum Joint Width *
Poured Rubber	¾"
Silicone Seal	2"
Strip Seal	3"
Modular Joint	Unlimited
Finger Joint	Unlimited

*Joints in sidewalks must meet all requirements of Americans with Disabilities Act.

For new construction, use only the joint types listed in the preceding table. A typical joint for most prestressed beam bridges is the silicone seal.

Maximum joint width..... $W_{max} := 2 \cdot in$

Minimum joint width at 70° F..... $W_{min} := \frac{5}{8} \cdot in$

Proposed joint width at 70° F..... $W := 1 \cdot in$

Movement [6.4.2]

For prestressed concrete structures, the movement is based on the greater of the following combinations:

Movement from the combination of temperature fall, creep, and shrinkage..... $\Delta x_{fall} = \Delta x_{temperature.fall} \cdots + \Delta x_{creep.shrinkage}$

*(**Note**: A temperature rise with creep and shrinkage is not investigated since they have opposite effects).*

Movement from factored effects of temperature..... $\Delta x_{rise} = 1.15 \cdot \Delta x_{temperature.rise}$

$\Delta x_{fall} = 1.15 \cdot \Delta x_{temperature.fall}$

*(**Note**: For concrete structures, the temperature rise and fall ranges are the same.*

C5. Miscellaneous

Beam Parameters

Distance from centerline pier (FFBW) to centerline bearing. $K := 11 \cdot in$

*(**Note**: Sometimes the "K" value at the end bent and pier may differ).*

Distance from end of beam to centerline of bearing..... $J := 6 \cdot in$

Beam length..... $L_{beam} := L_{span} - 2 \cdot (K - J)$

$L_{beam} = 89.167\ ft$

Beam design length..... $L_{design} := L_{span} - 2 \cdot K$

$L_{design} = 88.167\ ft$

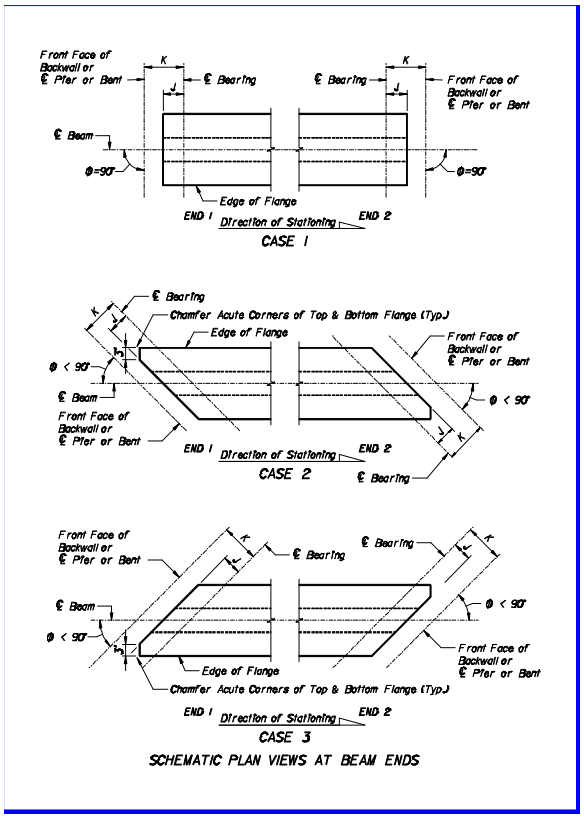

D. Substructure

D1. End Bent Geometry

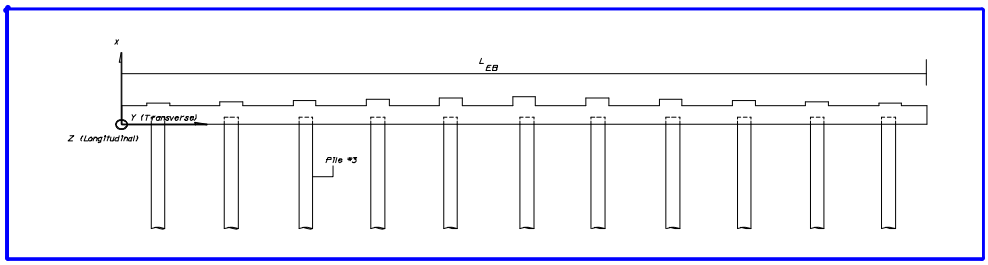

*(**Note**: End bent back wall not shown)*

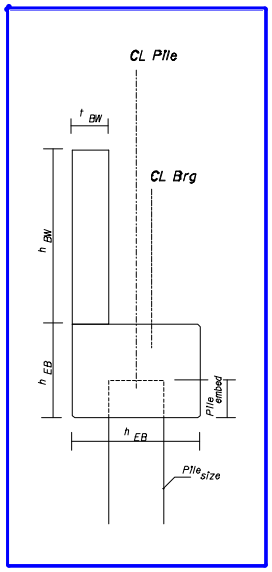

Depth of end bent cap..... $h_{EB} := 2.5 \cdot ft$

Width of end bent cap..... $b_{EB} := 3.5 \cdot ft$

Length of end bent cap..... $L_{EB} := 101.614 \cdot ft$

Height of back wall..... $h_{BW} := 5 \cdot ft$

Backwall design width..... $L_{BW} := 1 \cdot ft$

Thickness of back wall..... $t_{BW} := 12 \cdot in$

D2. Pier Geometry

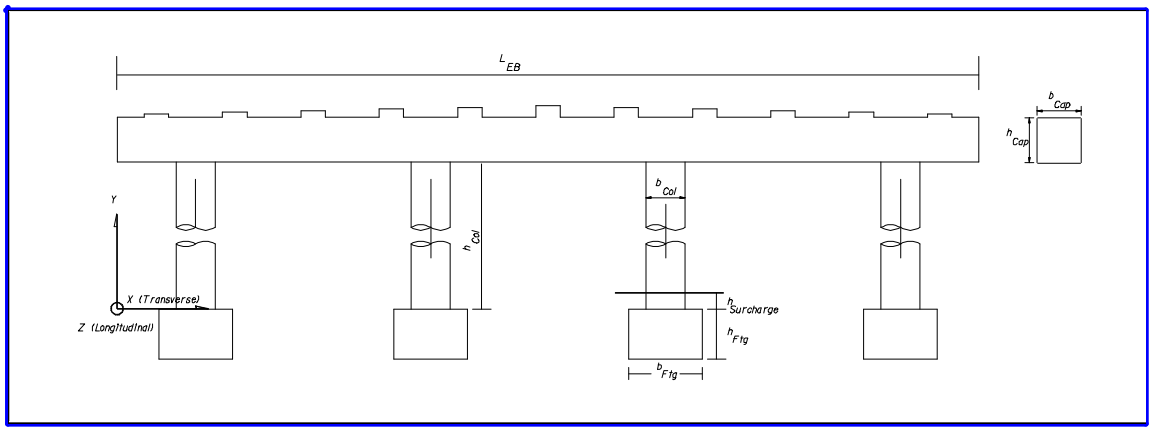

Depth of pier cap..... $h_{Cap} := 4.5 \cdot ft$

Width of pier cap..... $b_{Cap} := 4.5 \cdot ft$

Length of pier cap..... $L_{Cap} := 101.614 \cdot ft$

Height of pier column..... $h_{Col} := 14.0 \cdot ft$

Column diameter..... $b_{Col} := 4.0 \cdot ft$

Number of columns..... $n_{Col} := 4$

Surcharge on top of footing... $h_{Surcharge} := 2.0 \cdot ft$

D3. Footing Geometry

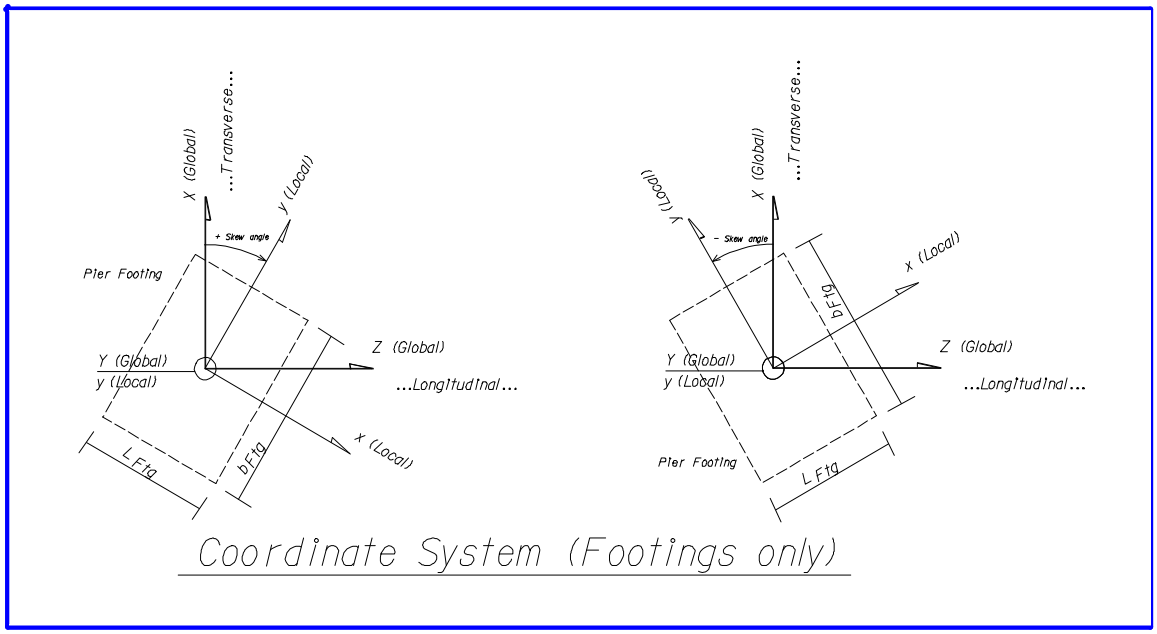

Depth of footing..... $h_{Ftg} := 4.0 \cdot ft$

Width of footing..... $b_{Ftg} := 7.5 \cdot ft$

Length of footing..... $L_{Ftg} := 7.5 \cdot ft$

D4. Pile Geometry

Pile Embedment Depth..... $Pile_{embed} := 12 \cdot in$

Pile Size..... $Pile_{size} := 18 \cdot in$

D5. Approach Slab Geometry

Approach slab thickness..... $t_{ApprSlab} := 13.5 \cdot in$

Approach slab length..... $L_{ApprSlab} := 34.75 \cdot ft$

*(**Note**: The min. approach slab dimension due to the skew is* $\frac{30 \cdot ft}{\cos(Skew)} = 34.64\,ft$ *).*

D6. Soil Properties

Unit weight of soil..... $\gamma_{soil} = 115\,pcf$

Defined Units

Dead Loads

Reference

Reference:F:\HDRDesignExamples\Ex1_PCBeam\103DsnPar.mcd(R)

Description

This section provides the dead loads for design of the bridge components.

Page Contents

Page	Contents
22	**A. Non-Composite Section Properties**
	A1. Summary of the properties for the selected beam type
	A2. Effective Flange Width [LRFD 4.6.2.6]
24	**B. Composite Section Properties**
	B1. Interior beams
	B2. Exterior beams
	B3. Summary of Properties
27	**C. Dead Loads**
	C1. Interior Beams
	C2. Exterior Beams
	C3. Summary

A. Non-Composite Section Properties

A1. Summary of Properties for the Selected Beam Type

The non-composite beam properties are given and can be obtained from any engineering textbook/publication.

NON-COMPOSITE PROPERTIES			IV
Moment of Inertia	[in⁴]	I_{nc}	260741
Section Area	[in²]	A_{nc}	789
ytop	[in]	yt_{nc}	29.27
ybot	[in]	yb_{nc}	24.73
Depth	[in]	h_{nc}	54
Top flange width	[in]	b_{tf}	20
Top flange depth	[in]	h_{tf}	8
Width of web	[in]	b_w	8
Bottom flange width	[in]	b_{bf}	26
Bottom flange depth	[in]	h_{bf}	8
Bottom flange taper	[in]	E	9
Section Modulus top	[in³]	S_{tnc}	8908
Section Modulus bottom	[in³]	S_{bnc}	10544

BeamType = "IV"

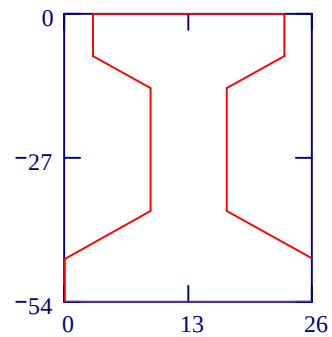

A2. Effective Flange Width [LRFD 4.6.2.6]

Interior beams

The effective flange width is selected from the minimum of the following three calculations:

One-quarter of the effective span length... $Slab_{width_0} := \frac{L_{span}}{4}$

$Slab_{width_0} = 270.0\,in$

12.0 times the average thickness of the slab, plus the greater of web thickness or one-half the width of the top flange of the beam..... $Slab_{width_1} := 12 \cdot t_{slab} + \max\left(b_w, \frac{b_{tf}}{2}\right)$

$Slab_{width_1} = 106.0\,in$

The average spacing of adjacent beams..... $Slab_{width_2} := BeamSpacing$

$Slab_{width_2} = 96.0\,in$

Effective flange width for interior beams... $b_{eff.interior} := \min(Slab_{width})$

$b_{eff.interior} = 96.0\,in$

Exterior beams

For exterior beams, the effective flange width may be taken as one-half the effective width of the adjacent interior beam, plus the least of:

One-eighth of the effective span length..... $Slab_{width_0} := \frac{L_{span}}{8}$

$Slab_{width_0} = 135.0\,in$

6.0 times the average thickness of the slab, plus the greater of half the web thickness or one-quarter of the width of the top flange of the basic girder..... $Slab_{width_1} := 6 \cdot t_{slab} + \max\left(\frac{b_w}{2}, \frac{b_{tf}}{4}\right)$

$Slab_{width_1} = 53.0\,in$

The width of the overhang..... $Slab_{width_2} := Overhang$

$Slab_{width_2} = 54.5\,in$

Effective flange width for exterior beams.. $b_{eff.exterior} := \frac{b_{eff.interior}}{2} + \min(Slab_{width})$

$b_{eff.exterior} = 101.0\,in$

Transformed Properties

To develop composite section properties, the effective flange width of the slab should be transformed to the concrete properties of the beam.

Modular ratio between the deck and beam. $n := \frac{E_{c.slab}}{E_{c.beam}}$

$n = 0.832$

Transformed slab width for interior beams $b_{tr.interior} := n \cdot (b_{eff.interior})$

$b_{tr.interior} = 79.9\,in$

Transformed slab width for exterior beams $b_{tr.exterior} := n \cdot (b_{eff.exterior})$

$b_{tr.exterior} = 84.0\,in$

B. Composite Section Properties

B1. Interior beams

Height of the composite section..... $h := h_{nc} + h_{buildup} + t_{slab}$

$h = 63.0\,in$

Area of the composite section..... $A_{slab} := b_{tr.interior} \cdot t_{slab}$

$A_{slab} = 639.0\,in^2$

$A_{fillet} := b_{tf} \cdot h_{buildup}$

$A_{fillet} = 20.0\,in^2$

$A_{Interior} := A_{nc} + A_{fillet} + A_{slab}$

$A_{Interior} = 1448.0\,in^2$

Distance from centroid of beam to extreme fiber in tension

$$y_b := \frac{A_{nc} \cdot yb_{nc} + A_{fillet} \cdot \left(h_{nc} + \frac{h_{buildup}}{2}\right) + A_{slab} \cdot \left(h_{nc} + h_{buildup} + \frac{t_{slab}}{2}\right)}{A_{Interior}}$$

$y_b = 40.3\,in$

Distance from centroid of beam to extreme fiber in compression..... $y_t := h - y_b$

$y_t = 22.7\,in$

Moment of Inertia..... $I_{slab} := \frac{1}{12} \cdot \left(b_{tr.interior}\right) \cdot t_{slab}^3 + A_{slab} \cdot \left(h - \frac{t_{slab}}{2} - y_b\right)^2$

$I_{slab} = 227710\,in^4$

$I_{fillet} := \frac{\left(b_{tf}\right) \cdot h_{buildup}^3}{12} + A_{fillet} \cdot \left(h_{nc} + \frac{h_{buildup}}{2} - y_b\right)^2$

$I_{fillet} = 4055\,in^4$

$I_{Interior} := I_{nc} + A_{nc} \cdot \left(y_b - yb_{nc}\right)^2 + I_{slab} + I_{fillet}$

$I_{Interior} = 682912\,in^4$

Section Modulus (top, top of beam, bottom)... $S_t := \frac{I_{Interior}}{y_t}$

$S_t = 30037\,in^3$

$S_{tb} := \frac{I_{Interior}}{h_{nc} - y_b}$

$S_{tb} = 49719\,in^3$

$S_b := \frac{I_{Interior}}{y_b}$

$S_b = 16961\,in^3$

B2. Exterior beams

Calculations are similar to interior beams.

Height of the composite section..... $h := h_{nc} + h_{buildup} + t_{slab}$

$h = 63.0\,in$

Area of the composite section..... $A_{slab} := b_{tr.exterior} \cdot t_{slab}$

$A_{slab} = 672.3\,in^2$

$A_{fillet} := b_{tf} \cdot h_{buildup}$

$A_{fillet} = 20.0\,in^2$

$A_{Exterior} := A_{nc} + A_{fillet} + A_{slab}$

$A_{Exterior} = 1481.3\,in^2$

Distance from centroid of beam to extreme fiber in tension

$$y'_b := \frac{A_{nc} \cdot yb_{nc} + A_{fillet} \cdot \left(h_{nc} + \frac{h_{buildup}}{2}\right) + A_{slab} \cdot \left(h_{nc} + h_{buildup} + \frac{t_{slab}}{2}\right)}{A_{Exterior}}$$

$y'_b = 40.7\,in$

Distance from centroid of beam to extreme fiber in compression..... $y'_t := h - y'_b$

$y'_t = 22.3\,in$

Moment of Inertia..... $I_{slab} := \frac{1}{12} \cdot \left(b_{tr.exterior}\right) \cdot t_{slab}^3 + A_{slab} \cdot \left(h - \frac{t_{slab}}{2} - y'_b\right)^2$

$I_{slab} = 229085\,in^4$

$I_{fillet} := \frac{\left(b_{tf}\right) \cdot h_{buildup}^3}{12} + A_{fillet} \cdot \left(h_{nc} + \frac{h_{buildup}}{2} - y'_b\right)^2$

$I_{fillet} = 3818\,in^4$

$I_{Exterior} := I_{nc} + A_{nc} \cdot \left(y'_b - yb_{nc}\right)^2 + I_{slab} + I_{fillet}$

$I_{Exterior} = 694509\,in^4$

Section Modulus (top, top of beam, bottom)... $S_t := \frac{I_{Exterior}}{y'_t}$

$S_t = 31124\,in^3$

$S_{tb} := \frac{I_{Exterior}}{h_{nc} - y'_b}$

$S_{tb} = 52162\,in^3$

$S_b := \frac{I_{Exterior}}{y'_b}$

$S_b = 17070\,in^3$

B3. Summary of Properties

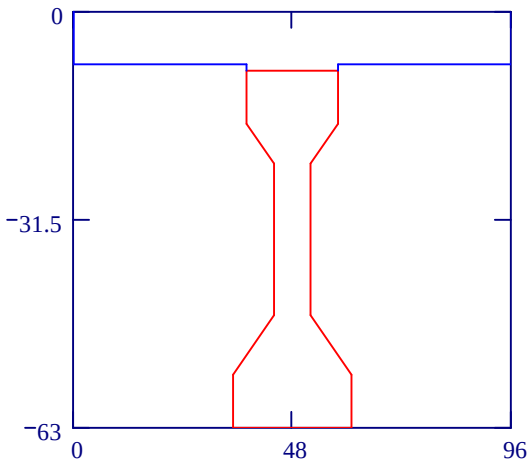

COMPOSITE SECTION PROPERTIES			INTERIOR	EXTERIOR
Effective slab width	[in]	$b_{eff.interior/exterior}$	96.0	101.0
Transformed slab width	[in]	$b_{tr.interior/exterior}$	79.9	84.0
Height of composite section	[in]	h	63.0	63.0
Effective slab area	[in²]	A_{slab}	639.0	672.3
Area of composite section	[in²]	$A_{Interior/Exterior}$	1448.0	1481.3
Neutral axis to bottom fiber	[in]	y_b	40.3	40.7
Neutral axis to top fiber	[in]	y_t	22.7	22.7
Inertia of composite section	[in⁴]	$I_{Interior/Exterior}$	682912.0	694509.4
Section modulus top of slab	[in³]	S_t	30037.5	31123.9
Section modulus top of beam	[in³]	S_{tb}	49719.4	52162.4
Section modulus bottom of beam	[in³]	S_b	16960.6	17070.1

C. Dead Loads

Calculate the moments and shears as a function of "x", where "x" represents any point along the length of the beam from 0 feet to L_{design}. The values for the moment and shear at key design check points are given...

where $Support := 0 \cdot ft$

$ShearChk := 0.72 \cdot h$

$Debond1 := 8 \cdot ft$

$Debond2 := 16 \cdot ft$ *{Check beam for debonding, if not debonding, enter 0 ft.)*

$Midspan := 0.5 \cdot L_{design}$ *(Check beam for debonding, if not debonding, enter 0 ft.)*

For convenience in MathCad, place these points in a matrix.....

$$x := \begin{pmatrix} Support \\ ShearChk \\ Debond1 \\ Debond2 \\ Midspan \end{pmatrix} \qquad pt := 0 .. 4$$

C1. Interior Beams

Design Moments and Shears for DC Dead Loads

Weight of beam

$w_{BeamInt} := A_{nc} \cdot \gamma_{conc}$

$w_{BeamInt} = 0.82\,klf$

- Moment - self-weight of beam at Release.. $M_{RelBeamInt}(x) := \frac{w_{BeamInt} \cdot L_{beam}}{2} \cdot x - \frac{w_{BeamInt} \cdot x^2}{2}$
- Moment - self-weight of beam..... $M_{BeamInt}(x) := \frac{w_{BeamInt} \cdot L_{design}}{2} \cdot x - \frac{w_{BeamInt} \cdot x^2}{2}$
- Shear - self-weight of beam ..... $V_{BeamInt}(x) := \frac{w_{BeamInt} \cdot L_{design}}{2} - w_{BeamInt} \cdot x$

Weight of deck slab, includes haunch and milling surface

$w_{SlabInt} := \left[\left(t_{slab} + t_{mill}\right) \cdot BeamSpacing + h_{buildup} \cdot b_{tf}\right] \cdot \gamma_{conc}$

$w_{SlabInt} = 0.82\,klf$

- Moment - self-weight of deck slab, includes haunch and milling surface ..... $M_{SlabInt}(x) := \frac{w_{SlabInt} \cdot L_{design}}{2} \cdot x - \frac{w_{SlabInt} \cdot x^2}{2}$
- Shear - self-weight of deck slab, includes haunch and milling surface..... $V_{SlabInt}(x) := \frac{w_{SlabInt} \cdot L_{design}}{2} - w_{SlabInt} \cdot x$

Shear from weight of diaphragms

$$P_{DiaphInt}(x) := \left[\left[\left(BeamSpacing \cdot h_{nc} - A_{nc}\right) - h_{bf} \cdot \left(BeamSpacing - b_{bf}\right)\right] \cdot t_{diap} \cdot \gamma_{conc}\right] \cdot if(x = 0ft, 1, 0)$$

Weight of stay-in-place forms

$$w_{FormsInt} := \left(BeamSpacing - b_{tf}\right) \cdot \rho_{forms}$$

$$w_{FormsInt} = 0.13\,klf$$

- Moment - stay-in-place forms..... $M_{FormsInt}(x) := \frac{w_{FormsInt} \cdot L_{design}}{2} \cdot x - \frac{w_{FormsInt} \cdot x^2}{2}$
- Shear - stay-in-place forms. ..... $V_{FormsInt}(x) := \frac{w_{FormsInt} \cdot L_{design}}{2} - w_{FormsInt} \cdot x$

Weight of traffic railing barriers

$$w_{barrier.interior} = 0.099\,klf$$

- Moment - traffic railing barriers..... $M_{TrbInt}(x) := \frac{w_{barrier.interior} \cdot L_{design}}{2} \cdot x - \frac{w_{barrier.interior} \cdot x^2}{2}$
- Shear - traffic railing barriers..... $V_{TrbInt}(x) := \frac{w_{barrier.interior} \cdot L_{design}}{2} - w_{barrier.interior} \cdot x$

DC Load total

$$w_{DC.BeamInt} := w_{BeamInt} + w_{SlabInt} + w_{FormsInt} + w_{barrier.interior}$$

$$w_{DC.BeamInt} = 1.87\,klf$$

DC Load Moment

$$M_{DC.BeamInt}(x) := M_{BeamInt}(x) + M_{SlabInt}(x) + M_{FormsInt}(x) + M_{TrbInt}(x)$$

DC Load Shear

$$V_{DC.BeamInt}(x) := V_{BeamInt}(x) + V_{SlabInt}(x) + V_{FormsInt}(x) + V_{TrbInt}(x) + P_{DiaphInt}(x)$$

Design Moments and Shears for DW Dead Loads

Weight of future wearing surface

$$w_{FwsInt} := BeamSpacing \cdot \rho_{fws}$$

$$w_{FwsInt} = 0.12\,klf$$

- Moment - weight of future wearing surface..... $M_{FwsInt}(x) := \frac{w_{FwsInt} \cdot L_{design}}{2} \cdot x - \frac{w_{FwsInt} \cdot x^2}{2}$

- Shear - weight of future wearing surface . $V_{FwsInt}(x) := \frac{w_{FwsInt} \cdot L_{design}}{2} - w_{FwsInt} \cdot x$

<u>Weight of utility loads</u>

$w_{UtilityInt} := 0 \cdot klf$

$w_{UtilityInt} = 0.00\,klf$

- Moment - utility loads..... $M_{UtilityInt}(x) := \frac{w_{UtilityInt} \cdot L_{design}}{2} \cdot x - \frac{w_{UtilityInt} \cdot x^2}{2}$

- Shear - utility loads..... $V_{UtilityInt}(x) := \frac{w_{UtilityInt} \cdot L_{design}}{2} - w_{UtilityInt} \cdot x$

<u>DW Load total</u>

$w_{DW.BeamInt} := w_{FwsInt} + w_{UtilityInt}$

$w_{DW.BeamInt} = 0.12\,klf$

<u>DW Load Moment</u>

$M_{DW.BeamInt}(x) := M_{FwsInt}(x) + M_{UtilityInt}(x)$

<u>DW Load Shear</u>

$V_{DW.BeamInt}(x) := V_{FwsInt}(x) + V_{UtilityInt}(x)$

C2. Exterior Beams

Design Moments and Shears for DC Dead Loads

<u>Weight of beam</u>

$w_{BeamExt} := A_{nc} \cdot \gamma_{conc}$

$w_{BeamExt} = 0.82\,klf$

- Moment - self-weight of beam at Release.. $M_{RelBeamExt}(x) := \frac{w_{BeamExt} \cdot L_{beam}}{2} \cdot x - \frac{w_{BeamExt} \cdot x^2}{2}$

- Moment - self-weight of beam..... $M_{BeamExt}(x) := \frac{w_{BeamExt} \cdot L_{design}}{2} \cdot x - \frac{w_{BeamExt} \cdot x^2}{2}$

- Shear - self-weight of beam ..... $V_{BeamExt}(x) := \frac{w_{BeamExt} \cdot L_{design}}{2} - w_{BeamExt} \cdot x$

Weight of deck slab, includes haunch and milling surface

$$w_{SlabExt} := \left[\left(t_{slab} + t_{mill}\right)\cdot\left(Overhang + \frac{BeamSpacing}{2}\right) + h_{buildup}\cdot b_{tf}\right]\cdot\gamma_{conc}$$

$$w_{SlabExt} = 0.87\,klf$$

- Moment - self-weight of deck slab, includes haunch and milling surface ..... $M_{SlabExt}(x) := \frac{w_{SlabExt}\cdot L_{design}}{2}\cdot x - \frac{w_{SlabExt}\cdot x^2}{2}$

- Shear - self-weight of deck slab, includes haunch and milling surface..... $V_{SlabExt}(x) := \frac{w_{SlabExt}\cdot L_{design}}{2} - w_{SlabExt}\cdot x$

Shear from weight of diaphragms

$$P_{DiaphExt}(x) := \frac{P_{DiaphInt}(x)}{2}$$

Weight of stay-in-place forms

$$w_{FormsExt} := \left(\frac{BeamSpacing - b_{tf}}{2}\right)\cdot\rho_{forms}$$

$$w_{FormsExt} = 0.06\,klf$$

- Moment - stay-in-place forms..... $M_{FormsExt}(x) := \frac{w_{FormsExt}\cdot L_{design}}{2}\cdot x - \frac{w_{FormsExt}\cdot x^2}{2}$

- Shear - stay-in-place forms. ..... $V_{FormsExt}(x) := \frac{w_{FormsExt}\cdot L_{design}}{2} - w_{FormsExt}\cdot x$

Weight of traffic railing barriers

$$w_{barrier.exterior} = 0.245\,klf$$

- Moment - traffic railing barriers..... $M_{TrbExt}(x) := \frac{w_{barrier.exterior}\cdot L_{design}}{2}\cdot x - \frac{w_{barrier.exterior}\cdot x^2}{2}$

- Shear - traffic railing barriers..... $V_{TrbExt}(x) := \frac{w_{barrier.exterior}\cdot L_{design}}{2} - w_{barrier.exterior}\cdot x$

DC Load total

$$w_{DC.BeamExt} := w_{BeamExt} + w_{SlabExt} + w_{FormsExt} + w_{barrier.exterior}$$

$$w_{DC.BeamExt} = 2.01\,klf$$

DC Load Moment

$$M_{DC.BeamExt}(x) := M_{BeamExt}(x) + M_{SlabExt}(x) + M_{FormsExt}(x) + M_{TrbExt}(x)$$

DC Load Shear

$$V_{DC.BeamExt}(x) := V_{BeamExt}(x) + V_{SlabExt}(x) + V_{FormsExt}(x) + V_{TrbExt}(x) + P_{DiaphExt}(x)$$

Design Moments and Shears for DW Dead Loads

Weight of future wearing surface

$$w_{FwsExt} := \left(Overhang - 1.5417 \cdot ft + \frac{BeamSpacing}{2}\right) \cdot \rho_{fws}$$

$$w_{FwsExt} = 0.10 \frac{kip}{ft}$$

- Moment - weight of future wearing surface..... $M_{FwsExt}(x) := \frac{w_{FwsExt} \cdot L_{design}}{2} \cdot x - \frac{w_{FwsExt} \cdot x^2}{2}$

- Shear - weight of future wearing surface . $V_{FwsExt}(x) := \frac{w_{FwsExt} \cdot L_{design}}{2} - w_{FwsExt} \cdot x$

Weight of utility loads

$$w_{UtilityExt} := 0 \cdot klf$$

$$w_{UtilityExt} = 0.00\, klf$$

- Moment - utility loads..... $M_{UtilityExt}(x) := \frac{w_{UtilityExt} \cdot L_{design}}{2} \cdot x - \frac{w_{UtilityExt} \cdot x^2}{2}$

- Shear - utility loads..... $V_{UtilityExt}(x) := \frac{w_{UtilityExt} \cdot L_{design}}{2} - w_{UtilityExt} \cdot x$

DW Load total

$$w_{DW.BeamExt} := w_{FwsExt} + w_{UtilityExt}$$

$$w_{DW.BeamExt} = 0.10\, klf$$

DW Load Moment

$$M_{DW.BeamExt}(x) := M_{FwsExt}(x) + M_{UtilityExt}(x)$$

DW Load Shear

$$V_{DW.BeamExt}(x) := V_{FwsExt}(x) + V_{UtilityExt}(x)$$

C3. Summary

	DESIGN MOMENTS (ft-kip)				
	Support	ShrChk	Debond1	Debond2	Midspan
Load/Location, x (ft)=	0.0	3.8	8.0	16.0	44.1
INTERIOR BEAM					
Beam at Release	0.0	132.6	266.8	481.1	816.7
Beam	0.0	131.1	263.5	474.5	798.6
Slab	0.0	130.9	263.2	473.9	797.6
Forms	0.0	20.2	40.6	73.1	123.1
Barrier	0.0	15.8	31.8	57.2	96.3
TOTAL DC	**0.0**	**298.0**	**599.2**	**1078.8**	**1815.6**
FWS	0.0	19.1	38.5	69.3	116.6
Utilities	0.0	0.0	0.0	0.0	0.0
TOTAL DW	**0.0**	**19.1**	**38.5**	**69.3**	**116.6**
EXTERIOR BEAM					
Beam at Release	0.0	132.6	266.8	481.1	816.7
Beam	0.0	131.1	263.5	474.5	798.6
Slab	0.0	139.6	280.6	505.2	850.2
Forms	0.0	10.1	20.3	36.6	61.5
Barrier	0.0	39.1	78.7	141.7	238.4
TOTAL DC	**0.0**	**319.9**	**643.1**	**1157.9**	**1948.8**
FWS	0.0	16.7	33.7	60.6	102.0
Utilities	0.0	0.0	0.0	0.0	0.0
TOTAL DW	**0.0**	**16.7**	**33.7**	**60.6**	**102.0**

	CORRESPONDING SHEARS (kip)				
	Support	ShrChk	Debond1	Debond2	Midspan
Load/Location, x (ft)=	0.0	3.8	8.0	16.0	44.1
INTERIOR BEAM					
Beam	36.2	33.1	29.7	23.1	0.0
Slab	36.2	33.1	29.6	23.1	0.0
Forms	5.6	5.1	4.6	3.6	0.0
Barrier	4.4	4.0	3.6	2.8	0.0
Diaphrams	3.0	0.0	0.0	0.0	0.0
TOTAL DC	**85.4**	**75.3**	**67.4**	**52.5**	**0.0**
FWS	5.3	4.8	4.3	3.4	0.0
Utilities	0.0	0.0	0.0	0.0	0.0
TOTAL DW	**5.3**	**4.8**	**4.3**	**3.4**	**0.0**
EXTERIOR BEAM					
Beam	36.2	33.1	29.7	23.1	0.0
Slab	38.6	35.3	31.6	24.6	0.0
Forms	2.8	2.6	2.3	1.8	0.0
Barrier	10.8	9.9	8.9	6.9	0.0
Diaphrams	1.5	0.0	0.0	0.0	0.0
TOTAL DC	**89.9**	**80.8**	**72.4**	**56.3**	**0.0**
FWS	4.6	4.2	3.8	2.9	0.0
Utilities	0.0	0.0	0.0	0.0	0.0
TOTAL DW	**4.6**	**4.2**	**3.8**	**2.9**	**0.0**

Defined Units

Live Load Distribution Factors

Reference

Reference:F:\HDRDesignExamples\Ex1_PCBeam\201DLs.mcd(R)

Description

This document calculates the live load distribution factors as per the LRFD.

Page Contents

Page	Contents
34	**A. Input Variables**
35	**B. Beam-Slab Bridges - Application [LRFD 4.6.2.2.1]**
36	**C. Moment Distribution Factors**
	C1. Moment: Interior Beams [LRFD 4.6.2.2.2b]
	C2. Moment: Exterior Beams [LRFD 4.6.2.2.2d]
	C3. Moment: Skewed Modification Factor [LRFD 4.6.2.2.2e]
	C4. Distribution Factors for Design Moments
40	**D. Shear Distribution Factors**
	D1. Shear: Interior Beams [LRFD 4.6.2.2.3a]
	D2. Shear: Exterior Beams [LRFD 4.6.2.2.3b]
	D3. Shear: Skewed Modification Factor [LRFD 4.6.2.2.3c]
	D4. Distribution Factors for Design Shears

A. Input Variables

Cross-Section View

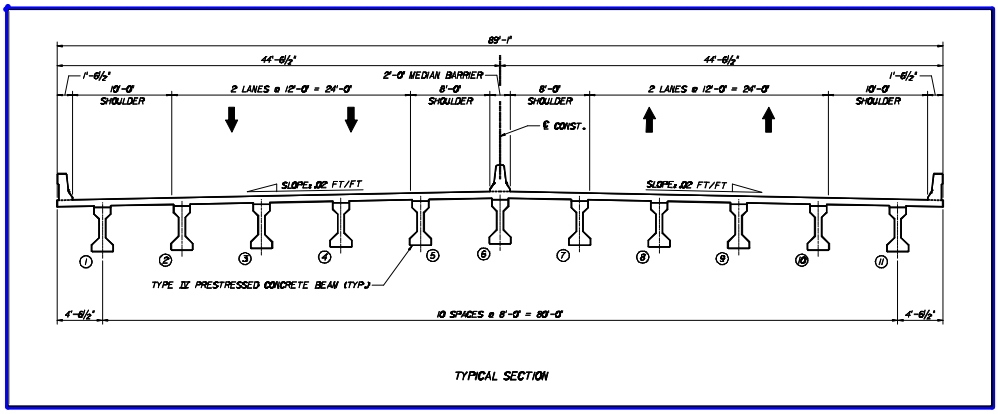

A1. Bridge Geometry

Overall bridge length.....	$L_{bridge} = 180\ ft$
Bridge design span length.....	$L_{span} = 90\ ft$
Beam design length.....	$L_{design} = 88.167\ ft$
Skew angle.....	$Skew = -30\ deg$
Superstructure Beam Type....	$BeamType = "IV"$
Number of beams.....	$N_{beams} = 11$
Beam Spacing.....	$BeamSpacing = 8\ ft$
Deck overhang.....	$Overhang = 4.5417\ ft$
Roadway clear width.....	$Rdwy_{width} = 42\ ft$
Number of design traffic lanes.....	$N_{lanes} = 3$
Height of composite section...	$h = 63.0\ in$
Distance from neutral axis to bottom fiber of non-composite section.....	$yb_{nc} = 24.7\ in$
Thickness of deck slab.....	$t_{slab} = 8\ in$
Modular ratio between beam and deck.....	$n^{-1} = 1.202$
Moment of inertia for non-composite section.....	$I_{nc} = 260741.0\ in^4$
Area of non-composite section.....	$A_{nc} = 789.0\ in^2$

B. Beam-Slab Bridges - Application [LRFD 4.6.2.2.1]

Live load on the deck must be distributed to the precast, prestressed beams. AASHTO provides factors for the distribution of live load into the beams. The factors can be used if the following criteria is met:

- Width of deck is constant
- Number of beams is not less than four
- Beams are parallel and have approximately the same stiffness
- The overhang minus the barrier width is less than 3.0 feet
- Curvature in plan is less than the limit specified in Article 4.6.1.2

If these conditions are not met, a refined method of analysis is required and diaphragms shall be provided.

Distance between center of gravity of non-composite beam and deck..... $e_g := \left(h - yb_{nc}\right) - \frac{t_{slab}}{2}$

$e_g = 34.3\,in$

Longitudinal stiffness parameter..... $K_g := n^{-1} \cdot \left(I_{nc} + A_{nc} \cdot e_g^{\,2}\right)$

$K_g = 1427039\,in^4$

C. Moment Distribution Factors

C1. Moment: Interior Beams [LRFD 4.6.2.2.2b]

- **One design lane**

Distribution factor for moment in interior beams when one design lane is loaded

$$g_{m.Interior} = 0.06 + \left(\frac{S}{14}\right)^{0.4} \cdot \left(\frac{S}{L}\right)^{0.3} \cdot \left(\frac{K_g}{12.0 \cdot L \cdot t_s^{\,3}}\right)^{0.1}$$

Using variables defined in this example,

$$g_{m.Interior1} := 0.06 + \left(\frac{BeamSpacing}{14 \cdot ft}\right)^{0.4} \cdot \left(\frac{BeamSpacing}{L_{design}}\right)^{0.3} \cdot \left(\frac{K_g}{12.0 \cdot \frac{in}{ft} \cdot L_{design} \cdot t_{slab}^{\,3}}\right)^{0.1}$$

$$g_{m.Interior1} = 0.489$$

- **Two or more design lanes**

Distribution factor for moment in interior beams when two or more design lanes are loaded

$$g_{m.Interior} = 0.075 + \left(\frac{S}{9.5}\right)^{0.6} \cdot \left(\frac{S}{L}\right)^{0.2} \cdot \left(\frac{K_g}{12.0 \cdot L \cdot t_s^{\,3}}\right)^{0.1}$$

Using variables defined in this example,

$$g_{m.Interior2} := 0.075 + \left(\frac{BeamSpacing}{9.5 \cdot ft}\right)^{0.6} \cdot \left(\frac{BeamSpacing}{L_{design}}\right)^{0.2} \cdot \left(\frac{K_g}{12.0 \cdot \frac{in}{ft} \cdot L_{design} \cdot t_{slab}^{\,3}}\right)^{0.1}$$

$$g_{m.Interior2} = 0.690$$

- **Range of Applicability**

The greater distribution factor is selected for moment design of the beams.

$$g_{m.Interior} := \max\left(g_{m.Interior1}, g_{m.Interior2}\right)$$

$$g_{m.Interior} = 0.690$$

Verify the distribution factor satisfies LRFD criteria for "Range of Applicability".

$$g_{m.Interior} := \left| \begin{array}{l} S \leftarrow (BeamSpacing \geq 3.5 \cdot ft) \cdot (BeamSpacing \leq 16.0 \cdot ft) \\ t_s \leftarrow \left(t_{slab} \geq 4.5 \cdot in\right) \cdot \left(t_{slab} \leq 12 \cdot in\right) \\ L \leftarrow \left(L_{design} \geq 20 \cdot ft\right) \cdot \left(L_{design} \leq 240 \cdot ft\right) \\ N_b \leftarrow \left(N_{beams} \geq 4\right) \\ K_g \leftarrow \left(K_g \geq 10000 \cdot in^4\right) \cdot \left(K_g \leq 7000000 \cdot in^4\right) \\ g_{m.Interior} \ \text{ if } \left(S \cdot t_s \cdot L \cdot N_b \cdot K_g\right) \\ \text{"NG, does not satisfy Range of Applicability"} \quad \text{otherwise} \end{array} \right.$$

$$g_{m.Interior} = 0.690$$

C2. Moment: Exterior Beams [LRFD 4.6.2.2.2d]

- **One design lane**

Distribution factor for moment in exterior beams when one design lane is loaded

$$P_1 = \frac{D_e + S - 2 \cdot ft}{S}$$

$$P_2 = \frac{D_e + S - 8 \cdot ft}{S}$$

$$D_e := Overhang - 1.5417 \cdot ft$$

$$D_e = 3\ ft$$

$$S := BeamSpacing$$

$$S = 8\ ft$$

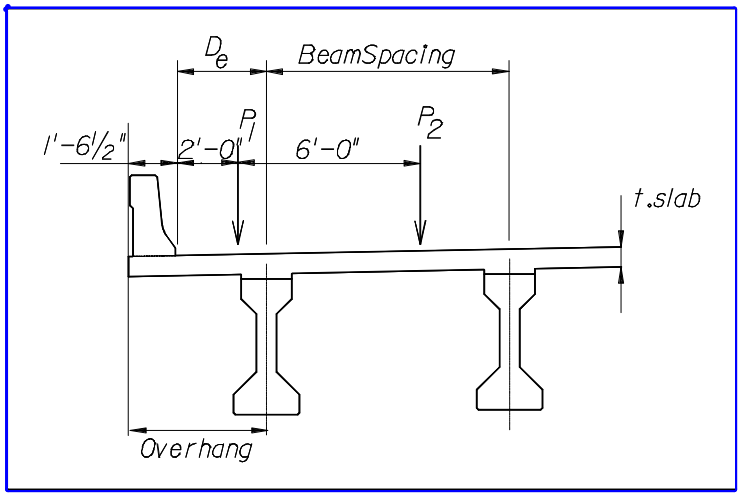

The distribution factor for one design lane loaded is based on the lever rule, which includes a 0.5 factor for converting the truck load to wheel loads and a 1.2 factor for multiple truck presence.

$$g_{m.Exterior1} := \text{if}\left[(2 \cdot ft + 6 \cdot ft) < \left(D_e + S\right), \frac{\left(2 \cdot S + 2D_e - 10 \cdot ft\right)}{S} \cdot 0.5, \frac{\left(S + D_e - 2 \cdot ft\right)}{S} \cdot 0.5\right] \cdot 1.2$$

$$g_{m.Exterior1} = 0.900$$

- **Two or more design lanes**

Distribution factor for moment in exterior beams when two or more design lanes are loaded

$$g_{m.Exterior} = g_{m.Interior} \cdot \left(0.77 + \frac{d_e}{9.1}\right)$$

Using variables defined in this example,

Distance from tip of web for exterior beam to barrier

$$d_e := Overhang - 1.5417 \cdot ft - \frac{b_w}{2}$$

$$d_e = 2.667\ ft$$

$$g_{m.Exterior2} := g_{m.Interior2} \cdot \left(0.77 + \frac{d_e}{9.1 \cdot ft}\right)$$

$$g_{m.Exterior2} = 0.733$$

- **Range of Applicability**

The greater distribution factor is selected for moment design of the beams.

$$g_{m.Exterior} := \max\left(g_{m.Exterior1}, g_{m.Exterior2}\right)$$

$$g_{m.Exterior} = 0.900$$

Verify the distribution factor satisfies LRFD criteria for "Range of Applicability".

$$g_{m.Exterior} := \left| \begin{array}{l} d_e \leftarrow \left(d_e \le 5.5 \cdot ft\right) \cdot \left(d_e \ge -1 \cdot ft\right) \\ g_{m.Exterior} \quad \text{if } d_e \\ \text{"NG, does not satisfy Range of Applicability"} \quad \text{otherwise} \end{array} \right.$$

$$g_{m.Exterior} = 0.900$$

C3. Moment: Skew Modification Factor [LRFD 4.6.2.2.2e]

A skew modification factor for moments **may** be used if the supports are skewed and the difference between skew angles of two adjacent supports does not exceed 10 degrees.

$$g_{m.Skew} = 1 - 0.25 \cdot \left[\left(\frac{K_g}{12.0 \cdot L \cdot t_s^{\,3}}\right)^{0.25}\right] \cdot \left(\frac{S}{L}\right)^{0.5} \cdot \tan(\theta)^{1.5}$$

Using variables defined in this example,

$$c_1 := 0.25 \cdot \left[\left(\frac{K_g}{12.0 \cdot \frac{in}{ft} L_{design} \cdot t_{slab}^{\,3}}\right)^{0.25}\right] \cdot \left(\frac{BeamSpacing}{L_{design}}\right)^{0.5}$$

$$c_1 = 0.096$$

$$g_{m.Skew} := 1 - c_1 \cdot \tan(|Skew|)^{1.5}$$

$$g_{m.Skew} = 0.958$$

Verify the distribution factor satisfies LRFD criteria for "Range of Applicability".

$$g_{m.Skew} := \left| \begin{array}{l} \theta \leftarrow (|Skew| \geq 30 \cdot deg) \cdot (|Skew| \leq 60 \cdot deg) \\ S \leftarrow (BeamSpacing \geq 3.5 \cdot ft) \cdot (BeamSpacing \leq 16.0 \cdot ft) \\ L \leftarrow \left(L_{design} \geq 20 \cdot ft\right) \cdot \left(L_{design} \leq 240 \cdot ft\right) \\ N_b \leftarrow \left(N_{beams} \geq 4\right) \\ g_{m.Skew} \ \text{ if } \left(\theta \cdot S \cdot L \cdot N_b\right) \\ \text{"NG, does not satisfy Range of Applicability"} \quad \text{otherwise} \end{array} \right.$$

$$g_{m.Skew} = 0.958$$

C4. Distribution Factors for Design Moments

Moment Distribution Factors		
	Interior	**Exterior**
1 Lane	0.489	0.900
2+ Lanes	0.690	0.733
Skew	0.958	0.958
DESIGN	**0.661**	**0.862**

D. Shear Distribution Factors

D1. Shear: Interior Beams [LRFD 4.6.2.2.3a]

- **One design lane**

Distribution factor for shear in interior beams when one design lane is loaded

$$g_v = 0.36 + \frac{S}{25}$$

Using variables defined in this example,

$$g_{v.Interior1} := 0.36 + \frac{BeamSpacing}{25 \cdot ft}$$

$$g_{v.Interior1} = 0.680$$

- **Two or more design lanes**

Distribution factor for shear in interior beams when two or more design lanes are loaded

$$g_v = 0.2 + \frac{S}{12} - \left(\frac{S}{35}\right)^{2.0}$$

Using variables defined in this example,

$$g_{v.Interior2} := 0.2 + \frac{BeamSpacing}{12 \cdot ft} - \left(\frac{BeamSpacing}{35 \cdot ft}\right)^{2.0}$$

$$g_{v.Interior2} = 0.814$$

- **Range of Applicability**

The greater distribution factor is selected for shear design of the beams

$$g_{v.Interior} := \max\left(g_{v.Interior1}, g_{v.Interior2}\right)$$

$$g_{v.Interior} = 0.814$$

Verify the distribution factor satisfies LRFD criteria for "Range of Applicability".

$$g_{v.Interior} := \left| \begin{array}{l} S \leftarrow (BeamSpacing \geq 3.5 \cdot ft) \cdot (BeamSpacing \leq 16.0 \cdot ft) \\ t_s \leftarrow \left(t_{slab} \geq 4.5 \cdot in\right) \cdot \left(t_{slab} \leq 12 \cdot in\right) \\ L \leftarrow \left(L_{design} \geq 20 \cdot ft\right) \cdot \left(L_{design} \leq 240 \cdot ft\right) \\ N_b \leftarrow \left(N_{beams} \geq 4\right) \\ g_{v.Interior} \quad \text{if } \left(S \cdot t_s \cdot L \cdot N_b\right) \\ \text{"NG, does not satisfy Range of Applicability"} \quad \text{otherwise} \end{array} \right.$$

$$g_{v.Interior} = 0.814$$

D2. Shear: Exterior Beams [LRFD 4.6.2.2.3b]

- **One design lane**

Distribution factor for shear in exterior beams when one design lane is loaded

$$P_1 = \frac{D_e + S - 2\cdot ft}{S}$$

$$P_2 = \frac{D_e + S - 8\cdot ft}{S}$$

$D_e = 3\ ft$

$S = 8\ ft$

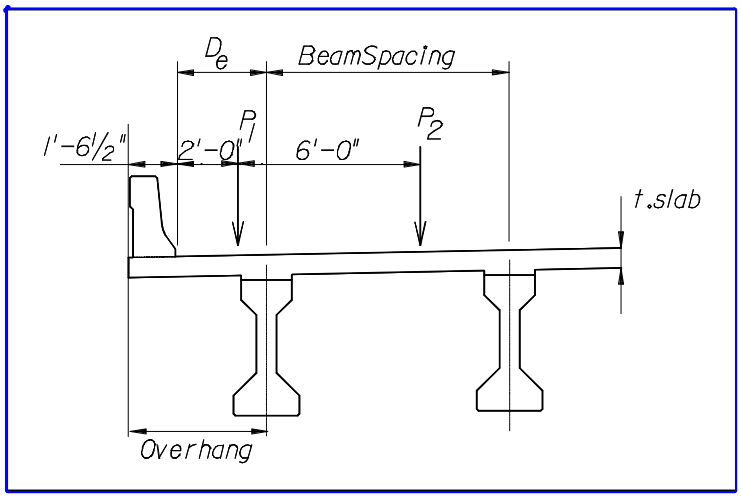

The distribution factor for one design lane loaded is based on the lever rule, which includes a 0.5 factor for converting the truck load to wheel loads and a 1.2 factor for multiple truck presence.

$$g_{v.Exterior1} := \text{if}\left[(2\cdot ft + 6\cdot ft) < (D_e + S), \frac{(2\cdot S + 2D_e - 10\cdot ft)}{S}\cdot 0.5, \frac{(S + D_e - 2\cdot ft)}{S}\cdot 0.5\right]\cdot 1.2$$

$g_{v.Exterior1} = 0.900$

- **Two or more design lanes**

Distribution factor for shear in exterior beams when two or more design lanes are loaded

$$g_{v.Exterior} = g_{v.Interior}\cdot\left(0.6 + \frac{d_e}{10}\right)$$

Using variables defined in this example,

$d_e = 2.667\ ft$

$$g_{v.Exterior2} := g_{v.Interior2}\cdot\left(0.6 + \frac{d_e}{10\cdot ft}\right)$$

$g_{v.Exterior2} = 0.706$

- **Range of Applicability**

The greater distribution factor is selected for shear design of the beams

$$g_{v.Exterior} := \max(g_{v.Exterior1}, g_{v.Exterior2})$$

$g_{v.Exterior} = 0.900$

Verify the distribution factor satisfies LRFD criteria for "Range of Applicability".

$$g_{v.Exterior} := \left| \begin{array}{l} d_e \leftarrow (d_e \le 5.5 \cdot ft) \cdot (d_e \ge -1 \cdot ft) \\ g_{v.Exterior} \ \text{ if } \ d_e \\ \text{"NG, does not satisfy Range of Applicability"} \quad \text{otherwise} \end{array} \right.$$

$$g_{v.Exterior} = 0.900$$

D3. Shear: Skewed Modification Factor [LRFD 4.6.2.2.3c]

Skew modification factor for shear **shall** be applied to the exterior beam at the obtuse corner ($\theta > 90^o$) and to all beams in a multibeam bridge.

$$g_{v.Skew} = 1 + 0.20 \cdot \left(\frac{12.0 \cdot L \cdot t_s^{\,3}}{K_g} \right)^{0.3} \cdot \tan(\theta)$$

Using variables defined in this example,

$$g_{v.Skew} := 1 + 0.20 \cdot \left(\frac{12.0 \cdot \frac{in}{ft} \cdot L_{design} \cdot t_{slab}^{\,3}}{K_g} \right)^{0.3} \cdot \tan(|Skew|)$$

$$g_{v.Skew} = 1.086$$

Verify the distribution factor satisfies LRFD criteria for "Range of Applicability".

$$g_{v.Skew} := \left| \begin{array}{l} \theta \leftarrow (|Skew| \ge 0 \cdot deg) \cdot (|Skew| \le 60 \cdot deg) \\ S \leftarrow (BeamSpacing \ge 3.5 \cdot ft) \cdot (BeamSpacing \le 16.0 \cdot ft) \\ L \leftarrow (L_{design} \ge 20 \cdot ft) \cdot (L_{design} \le 240 \cdot ft) \\ N_b \leftarrow (N_{beams} \ge 4) \\ g_{v.Skew} \ \text{ if } \ (\theta \cdot S \cdot L \cdot N_b) \\ \text{"NG, does not satisfy Range of Applicability"} \quad \text{otherwise} \end{array} \right.$$

$$g_{v.Skew} = 1.086$$

If uplift is a design issue, the skew factor for all beams is unconservative. However, uplift is not a design issue for prestressed concrete beam bridges designed as simple spans.

D4. Distribution Factors for Design Shears

Shear Distribution Factors		
	Interior	**Exterior**
1 Lane	0.680	0.900
2+ Lanes	0.814	0.706
Skew	1.086	1.086
DESIGN	**0.885**	**0.978**

Defined Units

SUPERSTRUCTURE DESIGN

Live Load Analysis

Reference

Reference:G:\computer_support\StructuresSoftware\StructuresManual\HDRDesignExamples\Ex1_PCBeam\202DFs.mcd(R)

Description

This section provides examples of the LRFD HL-93 live load analysis necessary for the superstructure design.

Page Contents

44 **A. Input Variables**

- **A1. Bridge Geometry**
- **A2. Beam Parameters**
- **A3. Dynamic Load Allowance [LRFD 3.6.2]**

45 **B. Maximum Live Load Moment, Reaction and Rotation**

- **B1. Maximum Live Load Rotation - One HL-93 vehicle**
- **B2. Live Load Moments and Shears - One HL-93 truck**
- **B3. Maximum Live Load Reaction at Intermediate Pier - - Two HL-93 vehicles**
- **B4. Summary**

A. Input Variables

A1. Bridge Geometry

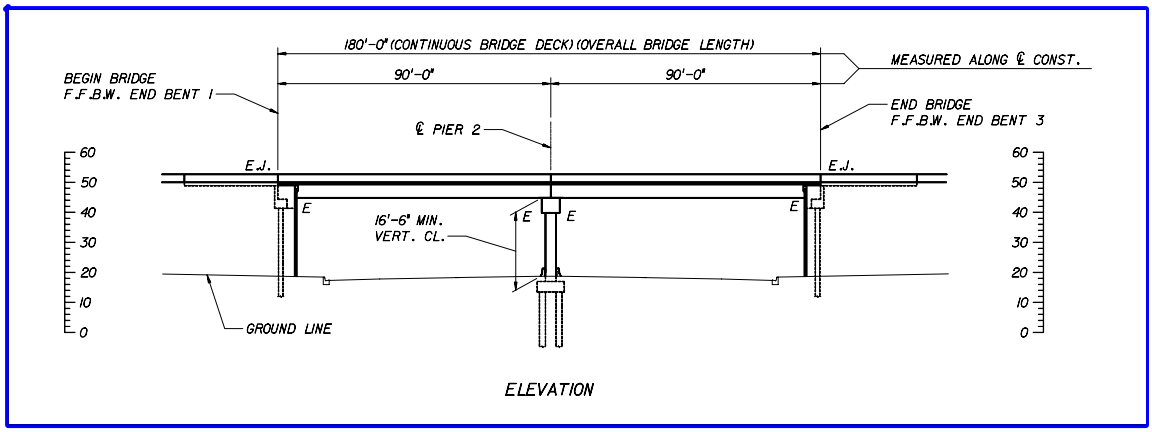

Overall bridge length..... $L_{bridge} = 180\ ft$

Bridge design span length..... $L_{span} = 90\ ft$

A2. Beam Parameters

Beam length..... $L_{beam} = 89.167\ ft$

Beam design length..... $L_{design} = 88.167\ ft$

Modulus of elasticity for beam..... $E_{c.beam} = 4176\ ksi$

Moment of inertia for the interior beam..... $I_{Interior} = 682912\ in^4$

Moment of inertia of the exterior beam..... $I_{Exterior} = 694509\ in^4$

A3. Dynamic Load Allowance [LRFD 3.6.2]

Impact factor for limit states, except fatigue and fracture.... $IM = 1.33$

B. Maximum Live Load Moment, Reaction and Rotation

This section shows how to calculate the maximum live load moment, reaction (shear), and rotation. The formulas for rotation were obtained from Roark's Formulas for Stress and Strain by Warren C. Young, 6th Edition, McGraw-Hill.

B1. Maximum Live Load Rotation - One HL-93 vehicle

The rotations are calculated for one vehicle over the interior and exterior beams. The composite beam sections are used to calculate the stiffness ($E_{c.beam} \cdot I$) of the beams.

The maximum live load rotation in a simple span is calculated by positioning the axle loads of an HL-93 design truck in the following locations:

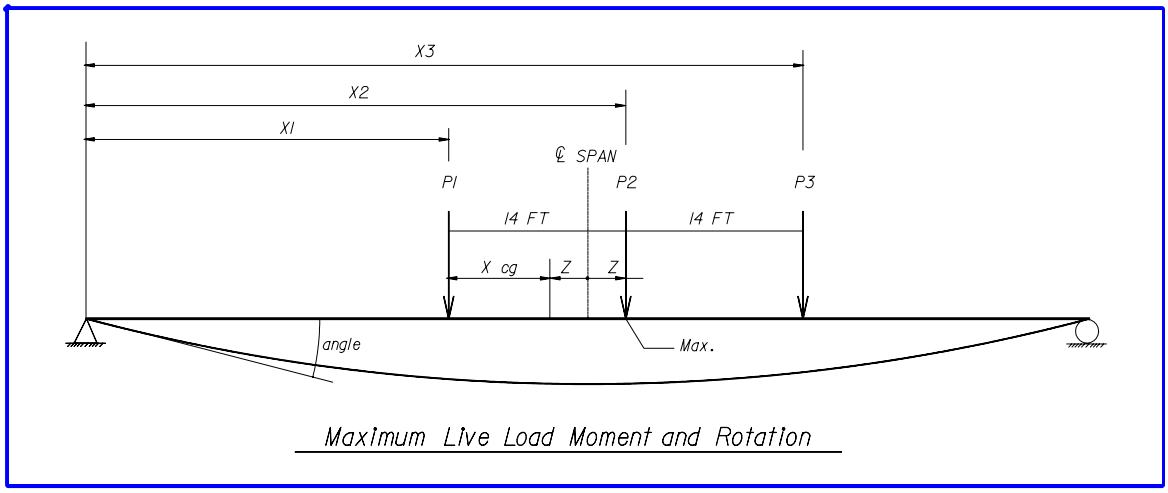

Axle loads..... $P1 := 32 \cdot kip$

$P2 := 32 \cdot kip$

$P3 := 8 \cdot kip$

Lane load..... $w_L := 0.64 \cdot \frac{kip}{ft}$

Center of gravity for axle loads..... $x_{cg} := \frac{P1 \cdot (0 \cdot ft) + P2 \cdot (14 \cdot ft) + P3 \cdot (28 \cdot ft)}{P1 + P2 + P3}$

$x_{cg} = 9.333\ ft$

Distance from center of gravity for axle loads to centerline of span ..... $z := \frac{14 \cdot ft - x_{cg}}{2}$

$z = 2.333\ ft$

Distance from left support to axle loads.....

$$X_1 := \frac{L_{design}}{2} - z - x_{cg}$$

$X_1 = 32.417\,ft$

$$X_2 := X_1 + 14 \cdot ft$$

$X_2 = 46.417\,ft$

$$X_3 := X_1 + 28 \cdot ft$$

$X_3 = 60.417\,ft$

Interior Beam

Rotation induced by each axle load.....

$$\Theta 1 := \frac{P1 \cdot X_1}{6 \cdot (E_{c.beam} \cdot I_{Interior}) \cdot L_{design}} \cdot (2 \cdot L_{design} - X_1) \cdot (L_{design} - X_1)$$

$\Theta 1 = 0.00079\,rad$

$$\Theta 2 := \frac{P2 \cdot X_2}{6 \cdot (E_{c.beam} \cdot I_{Interior}) \cdot L_{design}} \cdot (2 \cdot L_{design} - X_2) \cdot (L_{design} - X_2)$$

$\Theta 2 = 0.00077\,rad$

$$\Theta 3 := \frac{P3 \cdot X_3}{6 \cdot (E_{c.beam} \cdot I_{Interior}) \cdot L_{design}} \cdot (2 \cdot L_{design} - X_3) \cdot (L_{design} - X_3)$$

$\Theta 3 = 0.00015\,rad$

Rotation induced by HL-93 truck.....

$$\Theta_{truck} := (\Theta 1 + \Theta 2 + \Theta 3)$$

$\Theta_{truck} = 0.00171\,rad$

Rotation induced by lane load.....

$$\Theta_{lane} := \frac{w_L \cdot L_{design}^{\ 3}}{24 \cdot (E_{c.beam} \cdot I_{Interior})}$$

$\Theta_{lane} = 0.00092\,rad$

Rotation induced by HL-93 truck and lane load.....

$$\Theta_{LL.Interior} := \Theta_{truck} + \Theta_{lane}$$

$\Theta_{LL.Interior} = 0.00263\,rad$

Exterior Beam

Rotations induced by each axle load.....

$$\Theta 1 := \frac{P1 \cdot X_1}{6 \cdot (E_{c.beam} \cdot I_{Exterior}) \cdot L_{design}} \cdot (2 \cdot L_{design} - X_1) \cdot (L_{design} - X_1)$$

$\Theta 1 = 0.00078\,rad$

$$\Theta 2 := \frac{P2 \cdot X_2}{6 \cdot (E_{c.beam} \cdot I_{Exterior}) \cdot L_{design}} \cdot (2 \cdot L_{design} - X_2) \cdot (L_{design} - X_2)$$

$\Theta 2 = 0.00076\,rad$

$$\Theta 3 := \frac{P3 \cdot X_3}{6 \cdot (E_{c.beam} \cdot I_{Exterior}) \cdot L_{design}} \cdot (2 \cdot L_{design} - X_3) \cdot (L_{design} - X_3)$$

$\Theta 3 = 0.00015\,rad$

Rotation induced by HL-93 truck..... $\Theta_{truck} := (\Theta 1 + \Theta 2 + \Theta 3)$

$\Theta_{truck} = 0.00168\ rad$

Rotation induced by lane load. $\Theta_{lane} := \dfrac{w_L \cdot L_{design}^{3}}{24 \cdot (E_{c.beam} \cdot I_{Exterior})}$

$\Theta_{lane} = 0.00091\ rad$

Rotation induced by HL-93 truck and lane load..... $\Theta_{LL.Exterior} := \Theta_{truck} + \Theta_{lane}$

$\Theta_{LL.Exterior} = 0.00259\ rad$

B2. Live Load Moments and Shears - One HL-93 truck

The live load moments and shears in a simple span is calculated by positioning the axle loads of an HL-93 design truck in the following locations:

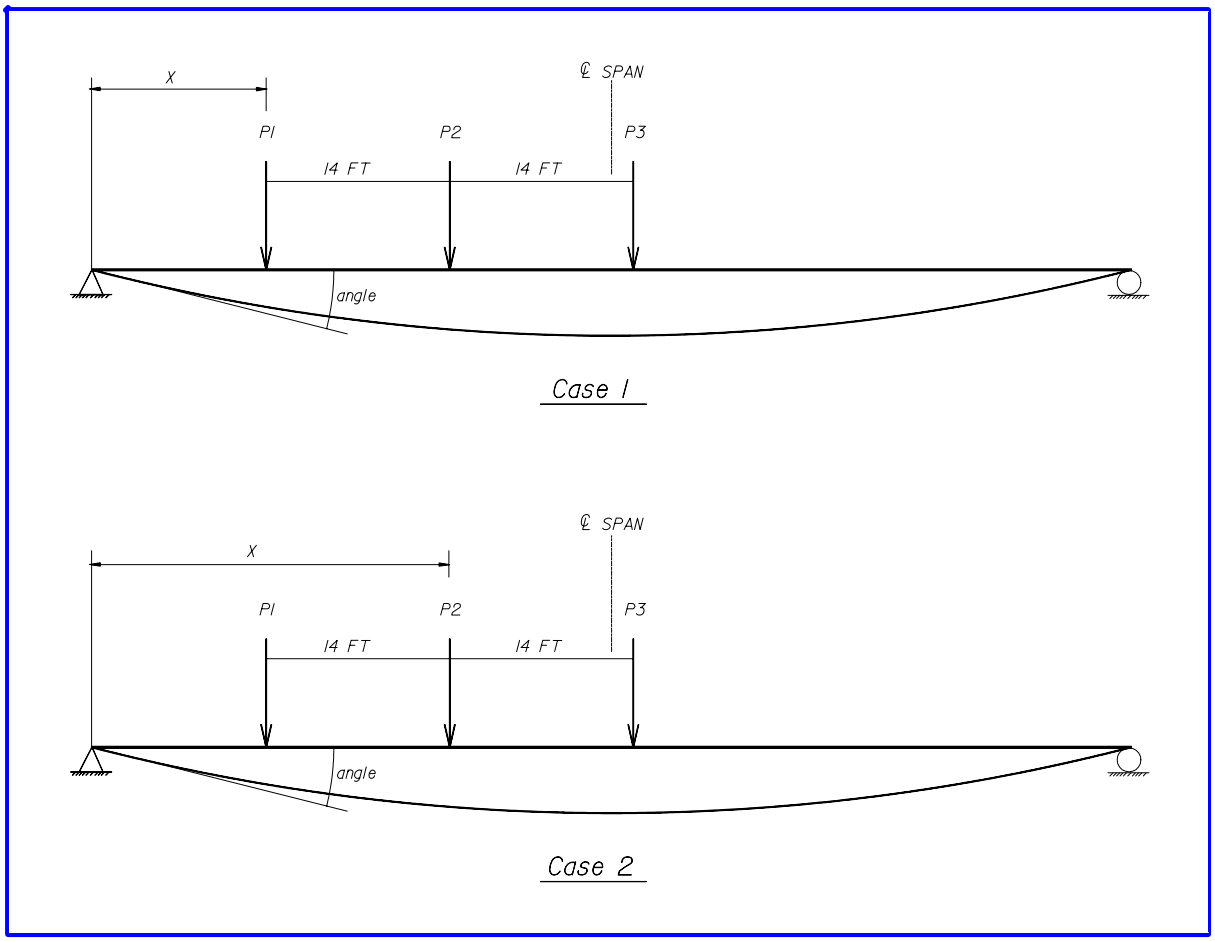

Case 1 HL-93 truck moment and shear:

$$M_{truck1}(x) := P1 \cdot \frac{(L_{design} - x)}{L_{design}} \cdot x + P2 \cdot \frac{(L_{design} - x - 14 \cdot ft)}{L_{design}} \cdot x + P3 \cdot \frac{(L_{design} - x - 28 \cdot ft)}{L_{design}} \cdot x$$

$$V_{truck1}(x) := P1 \cdot \frac{(L_{design} - x)}{L_{design}} + P2 \cdot \frac{(L_{design} - x - 14 \cdot ft)}{L_{design}} + P3 \cdot \frac{(L_{design} - x - 28 \cdot ft)}{L_{design}}$$

Case 2 HL-93 truck moment and shear:

$$M_{truck2}(x) := P1 \cdot \frac{(L_{design} - x)}{L_{design}} \cdot (x - 14 \cdot ft) + P2 \cdot \frac{(L_{design} - x)}{L_{design}} \cdot x + P3 \cdot \frac{(L_{design} - x - 14 \cdot ft)}{L_{design}} \cdot x$$

$$V_{truck2}(x) := P1 \cdot \frac{-(x - 14 \cdot ft)}{L_{design}} + P2 \cdot \frac{(L_{design} - x)}{L_{design}} + P3 \cdot \frac{(L_{design} - x - 14 \cdot ft)}{L_{design}}$$

Maximum moment and shear induced by the HL-93 truck...

$$M_{truck}(x) := \max(M_{truck1}(x), M_{truck2}(x))$$

*(**Note**: Choose maximum value)*

$$V_{truck}(x) := \max(V_{truck1}(x), V_{truck2}(x))$$

Moment and shear induced by the lane load.....

$$M_{lane}(x) := \frac{w_L \cdot L_{design}}{2} \cdot x - \frac{w_L \cdot x^2}{2}$$

$$V_{lane}(x) := \frac{w_L \cdot L_{design}}{2} - w_L \cdot x$$

Live load moment and shear for HL-93 truck load (including impact) and lane load.....

$$M_{LLI}(x) := M_{truck}(x) \cdot IM + M_{lane}(x)$$

$$V_{LLI}(x) := V_{truck}(x) \cdot IM + V_{lane}(x)$$

Live load reaction (without impact) .....

$$R_{LL}(x) := V_{truck}(x) + V_{lane}(x)$$

$$R_{LL}(Support) = 92.6\,kip$$

B3. Maximum Live Load Reaction at Intermediate Pier - Two HL-93 vehicles

While two HL-93 vehicles controls in this design, the tandem and single truck with lane load needs to be investigated for other design span lengths. The maximum live load reaction at an intermediate pier is calculated by positioning the axle loads of an HL-93 design truck in the following locations:

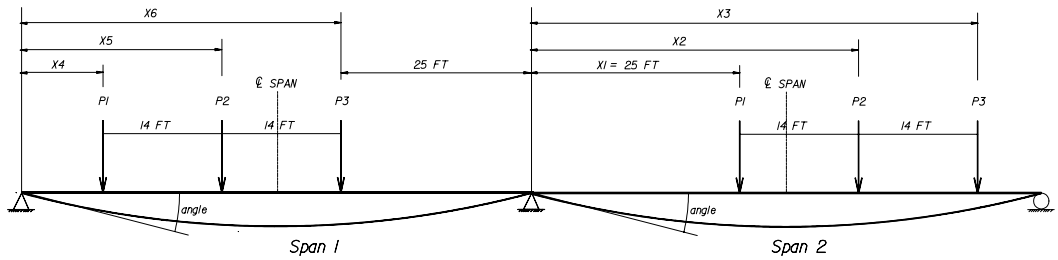

Maximum Live Load Reaction at Intermediate Pier

Distance from left support of corresponding span to axle loads.....

$X_1 := 25 \cdot ft$

$X_2 := X_1 + 14 \cdot ft$

$X_3 := X_1 + 28 \cdot ft$

$X_4 := L_{design} - 28 \cdot ft - 25 \cdot ft$

$X_5 := X_4 + 14 \cdot ft$

$X_6 := X_4 + 28 \cdot ft$

$X_1 = 25\,ft$

$X_2 = 39\,ft$

$X_3 = 53\,ft$

$X_4 = 35.167\,ft$

$X_5 = 49.167\,ft$

$X_6 = 63.167\,ft$

Reaction induced by each axle load.....

$$R_1 := \frac{P1}{L_{design}} \cdot \left[\left(L_{design} - X_1\right) + X_4\right]$$

$$R_2 := \frac{P2}{L_{design}} \cdot \left[\left(L_{design} - X_2\right) + X_5\right]$$

$$R_3 := \frac{P3}{L_{design}} \cdot \left[\left(L_{design} - X_3\right) + X_6\right]$$

$R_1 = 35.7\,kip$

$R_2 = 35.7\,kip$

$R_3 = 8.9\,kip$

Reaction induced by HL-93 trucks.....

$$R_{trucks} := \left(R_1 + R_2 + R_3\right)$$

$R_{trucks} = 80.3\,kip$

Reaction induced by lane load on both spans.....

$$R_{lanes} := \frac{w_L \cdot L_{span}}{2} \cdot (2)$$

$R_{lanes} = 57.6\,kip$

Reaction induced by HL-93 truck and lane load..... $R_{LLs} := 90\% \cdot (R_{trucks} + R_{lanes})$

$R_{LLs} = 124.1\ kip$

Reaction induced by HL-93 truck (including impact factor) and lane load..... $R_{LLIs} := 90\% \cdot (R_{trucks} \cdot IM + R_{lanes})$

$R_{LLIs} = 148.0\ kip$

B4. Summary

DESIGN LIVE LOAD					
	Support	ShrChk	Debond1	Debond2	Midspan
Load/Location, x (ft)=	0.0	3.8	8.0	16.0	44.1
MOMENTS: INTERIOR BEAM					
Live load + DLA	0.0	410.2	820.7	1461.4	2360.2
Distribution Factor	0.661	0.661	0.661	0.661	0.661
Design Live Load + DLA Moment		**271.1**	**542.4**	**965.9**	**1559.9**
MOMENTS: EXTERIOR BEAM					
Live load + DLA		410.2	820.7	1461.4	2360.2
Distribution Factor	0.862	0.862	0.862	0.862	0.862
Design Live Load + DLA Moment	**0.0**	**353.6**	**707.5**	**1259.9**	**2034.7**
SHEARS: INTERIOR BEAM					
Live load + DLA	113.8	107.3	100.0	86.2	37.7
Distribution Factor	0.885	0.885	0.885	0.885	0.885
Design Live Load + DLA Shear	**100.7**	**94.9**	**88.5**	**76.3**	**33.4**
SHEARS: EXTERIOR BEAM					
Live load + DLA	113.8	107.3	100.0	86.2	37.7
Distribution Factor	0.978	0.978	0.978	0.978	0.978
Design Live Load + DLA Shear	**111.3**	**104.9**	**97.8**	**84.3**	**36.9**

	Interior Beam	Exterior Beam
LL ROTATIONS (BRG PADS)		
Live load w/o DLA	0.00263	0.00259
Distribution Factor	0.661	0.862
Design Live Load Rotation	**0.00174**	**0.00223**

	Interior Beam	Exterior Beam
LL REACTIONS (BRG PADS)		
Live load w/o DLA	92.6	92.6
Distribution Factor	0.885	0.978
Design Live Load Reactions	**81.9**	**90.5**

1 HL-93 REACTION	w/o DLA	w/ DLA
Pier/End Bent (1 Truck)	**92.6**	**113.8**
Pier (2 Trucks)	**124.1**	**148.0**

Defined Units

Prestressed Beam Design - Part I

Reference

Reference:F:\HDRDesignExamples\Ex1_PCBeam\203LLs.mcd(R)

Description

This section provides the design of the prestressed concrete beam - interior beam design.

Page Contents

52 LRFD Criteria

53 A. Input Variables

A1. Bridge Geometry

A2. Section Properties

A3. Superstructure Moments at Midspan

A4. Superstructure Loads at Debonding Locations

A5. Superstructure Loads at the Other Locations

56 B. Interior Beam Midspan Moment Design

B1. Strand Pattern definition at Midspan

B2. Prestressing Losses [LRFD 5.9.5]

B3. Stress Limits (Compression = +, Tension = -)

B4. Service I and III Limit States

B5. Strength I Limit State moment capacity [LRFD 5.7.3]

B6. Limits for Reinforcement [LRFD 5.7.3.3]

71 C. Interior Beam Debonding Requirements

C1. Strand Pattern definition at Support

C2. Stresses at support at release

C3. Strand Pattern definition at Debond1

C4. Stresses at Debond1 at Release

C5. Strand Pattern definition at Debond2

C6. Stresses at Debond2 at Release

76 D. Shear Design

D1. Determine Nominal Shear Resistance

D2. b and q Parameters [LRFD 5.8.3.4.2]

D3. Longitudinal Reinforcement

82 E. Summary

LRFD Criteria

STRENGTH I - Basic load combination relating to the normal vehicular use of the bridge without wind.

$WA = 0$ For superstructure design, water load and stream pressure are not applicable.

$FR = 0$ No friction forces.

$TU = 0$ No uniform temperature load effects due to simple spans. Movements are unrestrained.

CR, SH These effects are accounted during the design of the prestressed strands with a factor of 1.0 for all Limit States $1.0 \cdot (CR + SH)$.

$Strength1 = 1.25 \cdot DC + 1.50 \cdot DW + 1.75 \cdot LL$

STRENGTH II - Load combination relating to the use of the bridge by Owner-specified special design vehicles, evaluation permit vehicles, or both without wind.

"Permit vehicles are not evaluated in this design example"

SERVICE I - Load combination relating to the normal operational use of the bridge with a 55 MPH wind and all loads taken at their nominal values.

$BR, WL = 0$ For prestressed beam design, braking forces and wind on live load are negligible.

$Service1 = 1.0 \cdot DC + 1.0 \cdot DW + 1.0 \cdot LL + 1.0 \cdot (CR + SH)$

"Applicable for maximum compressive stresses in beam ONLY. For tension, see Service III."

SERVICE III - Load combination relating only to tension in prestressed concrete structures with the objective of crack control.

$Service3 = 1.0 \cdot DC + 1.0 \cdot DW + 0.8 \cdot LL + 1.0 \cdot (CR + SH)$

"Applicable for maximum tension at midspan ONLY. For compression, see Service I."

FATIGUE - Fatigue load combination relating to repetitive gravitational vehicular live load under a single design truck.

$Fatigue = 0.75 \cdot LL$

A. Input Variables

A1. Bridge Geometry

Overall bridge length..... $L_{bridge} = 180\,ft$

Design span length..... $L_{span} = 90\,ft$

Skew angle..... $Skew = -30\,deg$

A2. Section Properties

NON-COMPOSITE PROPERTIES			IV
Moment of Inertia	[in⁴]	I_{nc}	260741
Section Area	[in²]	A_{nc}	789
ytop	[in]	yt_{nc}	29.27
ybot	[in]	yb_{nc}	24.73
Depth	[in]	h_{nc}	54
Top flange width	[in]	b_{tf}	20
Top flange depth	[in]	h_{tf}	8
Width of web	[in]	b_w	8
Bottom flange width	[in]	b_{bf}	26
Bottom flange depth	[in]	h_{bf}	8
Bottom flange taper	[in]	E	9
Section Modulus top	[in³]	S_{tnc}	8908
Section Modulus bottom	[in³]	S_{bnc}	10544

COMPOSITE SECTION PROPERTIES			INTERIOR	EXTERIOR
Effective slab width	[in]	$b_{eff.interior/exterior}$	96.0	101.0
Transformed slab width	[in]	$b_{tr.interior/exterior}$	79.9	84.0
Height of composite section	[in]	h	63.0	63.0
Effective slab area	[in²]	A_{slab}	639.0	672.3
Area of composite section	[in²]	$A_{Interior/Exterior}$	1448.0	1481.3
Neutral axis to bottom fiber	[in]	y_b	40.3	40.7
Neutral axis to top fiber	[in]	y_t	22.7	22.7
Inertia of composite section	[in⁴]	$I_{Interior/Exterior}$	682912.0	694509.4
Section modulus top of slab	[in³]	S_t	30037.5	31123.9
Section modulus top of beam	[in³]	S_{tb}	49719.4	52162.4
Section modulus bottom of beam	[in³]	S_b	16960.6	17070.1

A3. Superstructure Loads at Midspan

DC Moment of Beam at Release..... $M_{RelBeam} := M_{RelBeamInt}(Midspan)$

$M_{RelBeam} = 816.7\,ft \cdot kip$

DC Moment of Beam..... $M_{Beam} := M_{BeamInt}(Midspan)$

$M_{Beam} = 798.6\,ft \cdot kip$

DC Moment of Slab..... $M_{Slab} := M_{SlabInt}(Midspan)$

$M_{Slab} = 797.6\,ft \cdot kip$

DC Moment of stay-in-place forms..... $M_{Forms} := M_{FormsInt}(Midspan)$

$M_{Forms} = 123.1\ ft \cdot kip$

DC Moment of traffic railing barriers..... $M_{Trb} := M_{TrbInt}(Midspan)$

$M_{Trb} = 96.3\ ft \cdot kip$

DW Moment of future wearing surface.... $M_{Fws} := M_{FwsInt}(Midspan)$

$M_{Fws} = 116.6\ ft \cdot kip$

DW Moment of Utilities..... $M_{Utility} := M_{UtilityInt}(Midspan)$

$M_{Utility} = 0\ ft \cdot kip$

Live Load Moment..... $M_{LLI} := M_{LLI.Interior}(Midspan)$

$M_{LLI} = 1559.9\ ft \cdot kip$

$M_{Fatigue} := M_{LLI.Interior}(Midspan) - M_{lane}(Midspan)$

$M_{Fatigue} = 938\ ft \cdot kip$

$Service1 = 1.0 \cdot DC + 1.0 \cdot DW + 1.0 \cdot LL$

- Service I Limit State..... $M_{Srv1} := 1.0 \cdot (M_{Beam} + M_{Slab} + M_{Forms} + M_{Trb}) \ldots + 1.0 \cdot (M_{Fws} + M_{Utility}) + 1.0 \cdot (M_{LLI})$

  $M_{Srv1} = 3492.1\ ft\,kip$

$Service3 = 1.0 \cdot DC + 1.0 \cdot DW + 0.8 \cdot LL$

- Service III Limit State..... $M_{Srv3} := 1.0 \cdot (M_{Beam} + M_{Slab} + M_{Forms} + M_{Trb}) \ldots + 1.0 \cdot (M_{Fws} + M_{Utility}) + 0.8 \cdot (M_{LLI})$

  $M_{Srv3} = 3180.1\ ft\,kip$

$Strength1 = 1.25 \cdot DC + 1.50 \cdot DW + 1.75 \cdot LL$

- Strength I Limit State..... $M_r := 1.25 \cdot (M_{Beam} + M_{Slab} + M_{Forms} + M_{Trb}) \ldots + 1.50 \cdot (M_{Fws} + M_{Utility}) + 1.75 \cdot (M_{LLI})$

  $M_r = 5174.2\ ft\,kip$

$Fatigue = 0.75 \cdot LL$

- Fatigue Limit State..... $M_{Fatigue} := 0.75 \cdot M_{Fatigue}$ *(**Note**: Use NO LANE load).*

  $M_{Fatigue} = 703.5\ ft\,kip$

A4. Superstructure Loads at Debonding Locations

DC Moment of Beam at Release -
$Debond1 = 8\ ft$ Location..... $M_{RelBeamD1} := M_{RelBeamInt}(Debond1)$

$M_{RelBeamD1} = 266.8\ ft \cdot kip$

DC Moment of Beam at Release -
$Debond2 = 16\ ft$ Location..... $M_{RelBeamD2} := M_{RelBeamInt}(Debond2)$

$M_{RelBeamD2} = 481.1\ ft \cdot kip$

A5. Superstructure Loads at the Other Locations

At Support location

DC Shear & Moment..... $V_{DC.BeamInt}(Support) = 85.4\,kip$ $M_{DC.BeamInt}(Support) = 0\,ft\,kip$

DW Shear & Moment .... $V_{DW.BeamInt}(Support) = 5.3\,kip$ $M_{DW.BeamInt}(Support) = 0\,ft\,kip$

LL Shear & Moment.. .... $V_{LLI.Interior}(Support) = 100.7\,kip$ $M_{LLI.Interior}(Support) = 0\,ft\,kip$

$Strength1 = 1.25 \cdot DC + 1.50 \cdot DW + 1.75 \cdot LL$

- Strength I Limit State.....

$V_{u.Support} = 290.9\,kip$

$$V_{u.Support} := 1.25 \cdot \left(V_{DC.BeamInt}(Support)\right) \ldots + 1.50 \cdot \left(V_{DW.BeamInt}(Support)\right) \ldots + 1.75 \cdot \left(V_{LLI.Interior}(Support)\right)$$

At Shear Check location

DC Shear & Moment..... $V_{DC.BeamInt}(ShearChk) = 75.3\,kip$ $M_{DC.BeamInt}(ShearChk) = 298\,ft\,kip$

DW Shear & Moment .... $V_{DW.BeamInt}(ShearChk) = 4.8\,kip$ $M_{DW.BeamInt}(ShearChk) = 19.1\,ft\,kip$

LL Shear & Moment.. .... $V_{LLI.Interior}(ShearChk) = 94.9\,kip$ $M_{LLI.Interior}(ShearChk) = 271.1\,ft\,kip$

$Strength1 = 1.25 \cdot DC + 1.50 \cdot DW + 1.75 \cdot LL$

- Strength I Limit State.....

$V_u = 267.5\,kip$

$$V_u := 1.25 \cdot \left(V_{DC.BeamInt}(ShearChk)\right) \ldots + 1.50 \cdot \left(V_{DW.BeamInt}(ShearChk)\right) \ldots + 1.75 \cdot \left(V_{LLI.Interior}(ShearChk)\right)$$

$M_r = 875.7\,ft\,kip$

$$M_r := 1.25 \cdot \left(M_{DC.BeamInt}(ShearChk)\right) \ldots + 1.50 \cdot \left(M_{DW.BeamInt}(ShearChk)\right) \ldots + 1.75 \cdot \left(M_{LLI.Interior}(ShearChk)\right)$$

B. Interior Beam Midspan Moment Design

B1. Strand Pattern definition at Midspan

Using the following schematic, the proposed strand pattern at the midspan section can be defined.

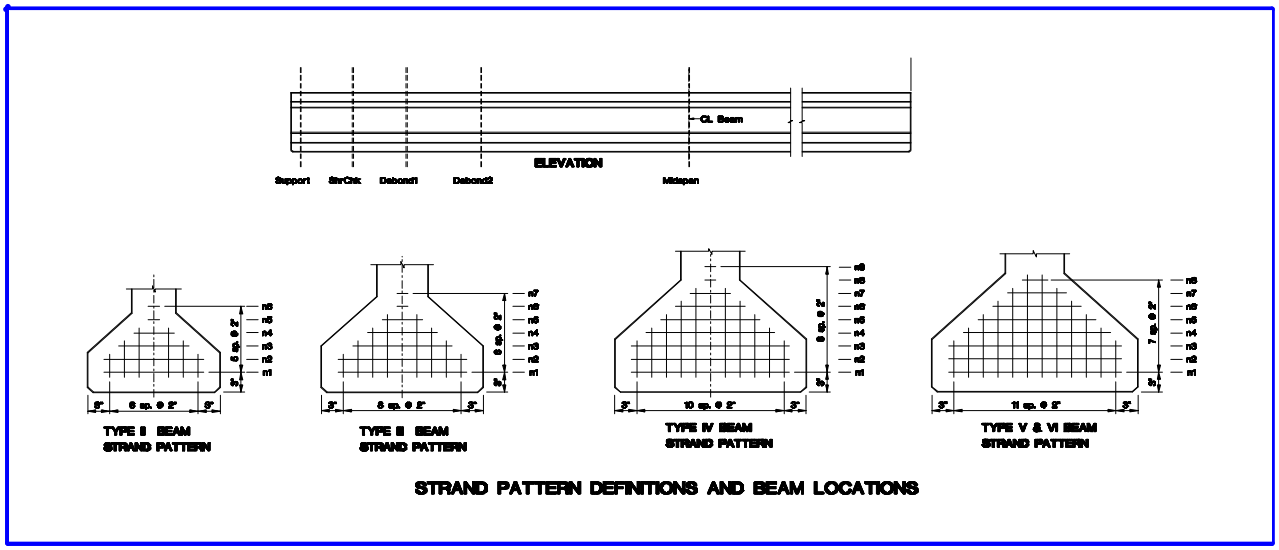

Support = 0 ft ShearChk = 3.8 ft Debond1 = 8 ft Debond2 = 16 ft Midspan = 44.08 ft

Strand pattern at midspan

Strand type..... $strand_{type} := \text{"LowLax"}$ *(**Note**: Options* ("LowLax" "StressRelieved")

$strand_{type} = \text{"LowLax"}$

Strand size..... $strand_{dia} := 0.5 \cdot in$ *(**Note**: Options* $(0.5 \cdot in \quad 0.5625 \cdot in \quad 0.6 \cdot in)$

$strand_{dia} = 0.5\ in$

Strand area.....

$$StrandArea := \left(\begin{array}{l} 0.153 \ \text{ if } strand_{dia} = 0.5 \cdot in \\ 0.192 \ \text{ if } strand_{dia} = 0.5625 \cdot in \\ 0.217 \ \text{ if } strand_{dia} = 0.6 \cdot in \\ 0.0 \ \text{ otherwise} \end{array} \right) \cdot in^2$$

$StrandArea = 0.153\ in^2$

Define the number of strands and eccentricity of strands from bottom of beam.....

BeamType = "IV"

MIDSPAN Strand Pattern Data

Rows of strand from bottom of beam	Input (inches)	Number of strands per row	MIDSPAN
y9 =	19	n9 =	0
y8 =	17	n8 =	0
y7 =	15	n7 =	0
y6 =	13	n6 =	0
y5 =	11	n5 =	0
y4 =	9	n4 =	0
y3 =	7	n3 =	9
y2 =	5	n2 =	11
y1 =	3	n1 =	11
Strand c.g. =	4.87	Total strands =	31

Area of prestressing steel.....

$A_{ps} := (strands_{total} \cdot StrandArea)$

$A_{ps} = 4.7\,in^2$

Transformed section properties

As per **SDG 4.3.1-C6**, states *"**Stress and camber** calculations for the design of simple span, pretensioned components must be based upon the use of transformed section properties."*

Modular ratio between the prestressing strand and beam. .....

$n_p := \frac{E_p}{E_{c.beam}}$

$n_p = 6.825$

Non-composite area transformed.....

$A_{nc.tr} := A_{nc} + (n_p - 1) \cdot A_{ps}$

$A_{nc.tr} = 816.6\,in^2$

Non-composite neutral axis transformed...

$yb_{nc.tr} := \frac{yb_{nc} \cdot A_{nc} + strand_{cg} \cdot in \cdot [(n_p - 1) \cdot A_{ps}]}{A_{nc.tr}}$

$yb_{nc.tr} = 24.1\,in$

Non-composite inertia transformed.....

$I_{nc.tr} := I_{nc} + (yb_{nc.tr} - strand_{cg} \cdot in)^2 \cdot [(n_p - 1) \cdot A_{ps}]$

$I_{nc.tr} = 270911.4\,in^4$

Non-composite section modulus top.....

$S_{topnc.tr} := \frac{I_{nc.tr}}{h_{nc} - yb_{nc.tr}}$

$S_{topnc.tr} = 9047.9\,in^3$

Non-composite section modulus bottom....

$S_{botnc.tr} := \frac{I_{nc.tr}}{yb_{nc.tr}}$

$S_{botnc.tr} = 11260.7\,in^3$

Modular ratio between the mild reinforcing and transformed concrete deck slab.....

$n_m := \frac{E_s}{E_{c.beam}}$

$n_m = 6.944$

Assumed area of reinforcement in deck slab per foot width of deck slab.....

$A_{deck.rebar} := 0.62 \cdot \frac{in^2}{ft}$

*(**Note**: Assuming #5 at 12" spacing, top and bottom longitudinally).*

Distance from bottom of beam to rebar....

$y_{bar} := h - \left(t_{mill} - \frac{t_{slab}}{2}\right)$

$y_{bar} = 67\,in$

Total reinforcing steel within effective width of deck slab.....

$A_{bar} := b_{eff.interior} \cdot A_{deck.rebar}$

$A_{bar} = 4.96\,in^2$

Composite area transformed.....

$A_{tr} := A_{Interior} + (n_p - 1) \cdot A_{ps} + (n_m - 1) \cdot A_{bar}$

$A_{tr} = 1505.1\,in^2$

Composite neutral axis transformed.....

$y_{b.tr} := \frac{\left[y_b \cdot A_{Interior} + strand_{cg} \cdot in \cdot \left[(n_p - 1) \cdot A_{ps}\right]\right] \ldots + y_{bar} \cdot \left[(n_m - 1) \cdot A_{bar}\right]}{A_{tr}}$

$y_{b.tr} = 40.1\,in$

Composite inertia transformed.....

$I_{tr} := I_{Interior} + (y_{b.tr} - strand_{cg} \cdot in)^2 \cdot \left[(n_p - 1) \cdot A_{ps}\right] \ldots + (y_{b.tr} - y_{bar})^2 \cdot \left[(n_m - 1) \cdot A_{bar}\right]$

$I_{tr} = 738546.7\,in^4$

Composite section modulus top of slab.....

$S_{slab.tr} := \frac{I_{tr}}{h - y_{b.tr}}$

$S_{slab.tr} = 32305.6\,in^3$

Composite section modulus top of beam.....

$S_{top.tr} := \frac{I_{tr}}{h - (y_{b.tr} - t_{slab} - t_{mill} - h_{buildup})}$

$S_{top.tr} = 23180.1\,in^3$

Composite section modulus bottom of beam.....

$S_{bot.tr} := \frac{I_{tr}}{y_{b.tr}}$

$S_{bot.tr} = 18399.8\,in^3$

B2. Prestressing Losses [LRFD 5.9.5]

For prestressing members, the total loss, Δf_{pT}, is expressed as:

$$\Delta f_{pT} = \Delta f_{pF} + \Delta f_{pA} + \Delta f_{pES} + \Delta f_{pSR} + \Delta f_{pCR} + \Delta f_{pR2}$$

where...	friction loss.....	Δf_{pF}	*(**Note**: Not considered for bonded prestressed beams)*
	anchorage set loss.....	Δf_{pA}	*(**Note**: Not considered for bonded prestressed beams)*
	elastic shortening loss.....	Δf_{pES}	
	shrinkage loss.....	Δf_{pSR}	
	creep of concrete loss....	Δf_{pCR}	
	relaxation of steel loss.....	Δf_{pR2}	

For the prestress loss calculations, gross section properties (not transformed) can be used.

Elastic Shortening

The loss due to elastic shortening in pretensioned members shall be taken as:

$$\Delta f_{pES} = \frac{E_p}{E_{ci}} \cdot f_{cgp}$$ where...

Modulus of elasticity of concrete at transfer of prestress force.....

$E_{ci.beam} = 3276\,ksi$

Modulus elasticity of prestressing steel.....

$E_p = 28500\,ksi$

Eccentricity of strands at midspan for non-composite section.....

$e_{cg.nc} := yb_{nc} - strand_{cg} \cdot in$

$e_{cg.nc} = 19.9\,in$

Section modulus at the strand c.g for the non-composite section.....

$S_{cg.nc} := \frac{I_{nc}}{e_{cg.nc}}$

$S_{cg.nc} = 13129.6\,in^3$

Stress in prestressing steel prior to transfer

$f_{ps} := 0.70 \cdot f_{pu}$

$f_{ps} = 189\,ksi$

Corresponding total prestressing force.....

$F_{ps} := A_{ps} \cdot f_{ps}$

$F_{ps} = 896.4\,kip$

Concrete stresses at c.g. of the prestressing force at transfer and the self wt of the beam at maximum moment location.....

$f_{cgp} := \frac{F_{ps}}{A_{nc}} + \frac{F_{ps} \cdot e_{cg.nc}}{S_{cg.nc}} - \frac{M_{RelBeam}}{S_{cg.nc}}$

$f_{cgp} = 1.75\,ksi$

Losses due to elastic shortening.....

$\Delta f_{pES} := \frac{E_p}{E_{ci.beam}} \cdot f_{cgp}$

$\Delta f_{pES} = 15.2\,ksi$

Shrinkage

Loss in prestress due to shrinkage may be estimated as:

$$\Delta f_{pSR} = (17.0 - 0.150 \cdot H) \cdot ksi$$ where

Average annual relative humidity.....

$H = 75$

Losses due to shrinkage..... $\Delta f_{pSR} := (17.0 - 0.150 \cdot H) \cdot ksi$

$\Delta f_{pSR} = 5.8\,ksi$

Creep

Prestress loss due to creep may be taken as:

$$\Delta f_{pCR} = 12 \cdot f_{cgp} - 7 \cdot f_{cdp} \geq 0$$

Eccentricity of strands at midspan for composite section..... $e_{cg} := y_b - strand_{cg} \cdot in$

$e_{cg} = 35.4\,in$

Section modulus at the strand c.g for the composite section..... $S_{cg} := \frac{I_{Interior}}{e_{cg}}$

$S_{cg} = 19294.7\,in^3$

Permanent load moments at midspan acting on non-composite section (except beam at transfer)..... $M_{nc} := M_{Slab} + M_{Forms}$

$M_{nc} = 920.7\,kip \cdot ft$

Permanent load moments at midspan acting on composite section..... $M := M_{Trb} + M_{Fws} + M_{Utility}$

$M = 212.9\,kip \cdot ft$

Concrete stresses at c.g. of the prestressing force due to permanent loads except at transfer..... $f_{cdp} := \frac{M_{nc}}{S_{cg.nc}} + \frac{M}{S_{cg}}$

$f_{cdp} = 0.97\,ksi$

Losses due to creep..... $\Delta f_{pCR} := \max(12 \cdot f_{cgp} - 7 \cdot f_{cdp}, 0 \cdot ksi)$

$\Delta f_{pCR} = 14.1\,ksi$

Steel Relaxation at Transfer

Prestress loss due to relaxation loss of the prestressing steel at transfer may be taken as:

$$\Delta f_{pR1} = \begin{cases} \left[\frac{\log(24.0\cdot t)}{10.0}\cdot\left(\frac{f_{pj}}{f_{py}} - 0.55\right)\cdot f_{pj}\right] & \text{if } strand_{type} = \text{"StressRelieved"} \\ \left[\frac{\log(24.0\cdot t)}{40.0}\cdot\left(\frac{f_{pj}}{f_{py}} - 0.55\right)\cdot f_{pj}\right] & \text{if } strand_{type} = \text{"LowLax"} \end{cases}$$

where,

Time estimated (in days) between stressing and transfer..... $t := 1.5$

$t = 1.5$ days

Initial stress in tendon at time of stressing (jacking force) [**LRFD Table 5.9.3.1**]..... $f_{pj} := \begin{cases} (0.70\cdot f_{pu}) & \text{if } strand_{type} = \text{"StressRelieved"} \\ (0.75\cdot f_{pu}) & \text{if } strand_{type} = \text{"LowLax"} \end{cases}$

$f_{pj} = 202.5$ ksi

*(**Note**: **LRFD C5.9.5.4.4b** allows* $f_{pj} = 0.80\cdot f_{pu}$ *for this calculation)*

Specified yield strength of the prestressing steel [**LRFD 5.4.4.1**]..... $f_{py} := \begin{cases} (0.85\cdot f_{pu}) & \text{if } strand_{type} = \text{"StressRelieved"} \\ (0.90\cdot f_{pu}) & \text{if } strand_{type} = \text{"LowLax"} \end{cases}$

$f_{py} = 243$ ksi

Losses due to steel relaxation at transfer...

$$\Delta f_{pR1} := \begin{cases} \left[\frac{\log(24.0\cdot t)}{10.0}\cdot\left(\frac{f_{pj}}{f_{py}} - 0.55\right)\cdot f_{pj}\right] & \text{if } strand_{type} = \text{"StressRelieved"} \\ \left[\frac{\log(24.0\cdot t)}{40.0}\cdot\left(\frac{f_{pj}}{f_{py}} - 0.55\right)\cdot f_{pj}\right] & \text{if } strand_{type} = \text{"LowLax"} \end{cases}$$

$\Delta f_{pR1} = 2.2$ ksi

Steel Relaxation after Transfer

Prestress loss due to relaxation loss of the prestressing steel after transfer may be taken as:

$$\Delta f_{pR2} = \begin{cases} \left[20.0 - 0.4\cdot\Delta f_{pES} - 0.2\cdot\left(\Delta f_{pSR} + \Delta f_{pCR}\right)\right] & \text{if } strand_{type} = \text{"StressRelieved"} \\ \left[20.0 - 0.4\cdot\Delta f_{pES} - 0.2\cdot\left(\Delta f_{pSR} + \Delta f_{pCR}\right)\right]\cdot(30\cdot\%) & \text{if } strand_{type} = \text{"LowLax"} \end{cases}$$

where,

Losses due to steel relaxation after transfer

$$\Delta f_{pR2} := \begin{cases} \left[20.0 \cdot ksi - 0.4 \cdot \Delta f_{pES} - 0.2 \cdot \left(\Delta f_{pSR} + \Delta f_{pCR}\right)\right] & \text{if } strand_{type} = \text{"StressRelieved"} \\ \left[20.0 \cdot ksi - 0.4 \cdot \Delta f_{pES} - 0.2 \cdot \left(\Delta f_{pSR} + \Delta f_{pCR}\right)\right] \cdot (30 \cdot \%) & \text{if } strand_{type} = \text{"LowLax"} \end{cases}$$

$\Delta f_{pR2} = 3\,ksi$

Total Prestress Loss

The total loss, Δf_{pT}, is expressed as..... $\Delta f_{pT} := \Delta f_{pES} + \Delta f_{pSR} + \Delta f_{pCR} + \Delta f_{pR2}$

$\Delta f_{pT} = 38.1\,ksi$

Percent loss of strand force..... $Loss := \dfrac{\Delta f_{pT}}{f_{pj}}$

$Loss = 18.8\,\%$

B3. Stress Limits (*Compression* = +, *Tension* = -)

Initial Stresses [SDG 4.3]

Limit of tension in top of beam at release (straight strand only)

Outer 15 percent of design beam..... $f_{top.outer15} = -0.76\,ksi$

Center 70 percent of design beam..... $f_{top.center70} = -0.38\,ksi$

Limit of compressive concrete strength at release..... $f_{ci.beam} = 4\,ksi$

For prestressing members, the total loss, Δf_{pT}, at release is expressed as:

$$\Delta f_{pTRelease} = \Delta f_{pES} + \Delta f_{pR1}$$

where... elastic shortening loss..... Δf_{pES}

relaxation of steel loss at transfer..... Δf_{pR1}

The losses at release..... $\Delta f_{pTRelease} := \Delta f_{pES} + \Delta f_{pR1}$

$\Delta f_{pTRelease} = 17.4\,ksi$

Total jacking force of strands..... $F_{pj} := f_{pj} \cdot A_{ps}$

$F_{pj} = 960.5\,kip$

The actual stress in strand after losses at transfer have occured..... $f_{pe} := f_{pj} - \Delta f_{pTRelease}$

$f_{pe} = 185.1\,ksi$

Calculate the stress due to prestress at the top and bottom of beam at release:

Total force of strands..... $F_{pe} := f_{pe} \cdot A_{ps}$

$F_{pe} = 877.8\,kip$

Stress at top of beam at support..... $\sigma_{pjSupport} := \left(\frac{F_{pe}}{A_{nc}} - \frac{F_{pe} \cdot e_{cg.nc}}{S_{tnc}} \right)$

$\sigma_{pjSupport} = -0.84\,ksi$

Stress at top of beam at center 70%..... $\sigma_{pjTop70} := \frac{M_{RelBeam}}{S_{tnc}} + \left(\frac{F_{pe}}{A_{nc}} - \frac{F_{pe} \cdot e_{cg.nc}}{S_{tnc}} \right)$

$\sigma_{pjTop70} = 0.26\,ksi$

Stress at bottom of beam at center 70%... $\sigma_{pjBotBeam} := \frac{-M_{RelBeam}}{S_{bnc}} + \left(\frac{F_{pe}}{A_{nc}} + \frac{F_{pe} \cdot e_{cg.nc}}{S_{bnc}} \right)$

$\sigma_{pjBotBeam} = 1.84\,ksi$

$$\sigma_{pjSupport} := \begin{cases} \text{"OK"} & \text{if } \sigma_{pjSupport} \le 0\cdot ksi \wedge \sigma_{pjSupport} \ge f_{top.outer15} \\ \text{"OK"} & \text{if } \sigma_{pjSupport} > 0\cdot ksi \wedge \sigma_{pjSupport} \le f_{ci.beam} \\ \text{"NG"} & \text{otherwise} \end{cases}$$

where $f_{top.outer15} = -0.76\,ksi$

where $f_{ci.beam} = 4\,ksi$

$\sigma_{pjSupport} = \text{"NG"}$ *(**Note**: Debonding will be required).*

$$Top70Release := \begin{cases} \text{"OK"} & \text{if } \sigma_{pjTop70} \le 0\cdot ksi \wedge \sigma_{pjTop70} \ge f_{top.center70} \\ \text{"OK"} & \text{if } \sigma_{pjTop70} > 0\cdot ksi \wedge \sigma_{pjTop70} \le f_{ci.beam} \\ \text{"NG"} & \text{otherwise} \end{cases}$$

where $f_{top.center70} = -0.38\,ksi$

where $f_{ci.beam} = 4\,ksi$

$Top70Release = \text{"OK"}$

$$BotRelease := \begin{cases} \text{"OK"} & \text{if } \sigma_{pjBotBeam} \le f_{ci.beam} \\ \text{"NG"} & \text{if } \sigma_{pjBotBeam} \le 0\cdot ksi \\ \text{"NG"} & \text{otherwise} \end{cases}$$

where $f_{ci.beam} = 4\,ksi$

$BotRelease = \text{"OK"}$

*(**Note**: Some MathCad equation explanations-*

- *The check for the top beam stresses checks to see if tension is present,* $\sigma_{pjTop70} \le 0\cdot ksi$*, and then applies the proper allowable. A separate line is used for the compression and tension allowables. The last line,* "NG" otherwise *, is a catch-all statement such that if the actual stress is not within the allowables, it is considered "NG".)*
- *For the bottom beam, the first line,* $\sigma_{pjBotBeam} \le f_{ci.beam}$*, checks that the allowable compression is not exceeded. The second line assures that no tension is present, if there is then the variable will be set to "NG". The catch-all statement,* "NG" otherwise *, will be ignored since the first line was satisfied. If the stress were to exceed the allowable, neither of the first two lines will be satisfied therefore the last line would produce the answer of "NG".*

Final Stresses [LRFD Table 5.9.4.2.1-1 & 5.9.4.2.2-1]

(1) Sum of effective prestress and permanent loads

Limit of compression in slab..... $f_{allow1.TopSlab} := 0.45\cdot f_{c.slab}$

$f_{allow1.TopSlab} = 2.03\,ksi$

Limit of compression in top of beam.. $f_{allow1.TopBeam} := 0.45\cdot f_{c.beam}$

$f_{allow1.TopBeam} = 2.93\,ksi$

(2) Sum of live load and 1/2 sum of effective prestress and permanent loads

Limit of compression in slab..... $f_{allow2.TopSlab} := 0.40\cdot f_{c.slab}$

$f_{allow2.TopSlab} = 1.80\,ksi$

Limit of compression in top of beam.. $f_{allow2.TopBeam} := 0.40 \cdot f_{c.beam}$

$f_{allow2.TopBeam} = 2.60\,ksi$

(3) Sum of effective prestress, permanent loads and transient loads

*(**Note**: The engineer is reminded that this check needs to be made also for stresses during shipping and handling. For purposes of this design example, this calculation is omitted).*

Limit of compression in slab..... $f_{allow3.TopSlab} := 0.60 \cdot f_{c.slab}$

$f_{allow3.TopSlab} = 2.70\,ksi$

Limit of compression in top of beam.. $f_{allow3.TopBeam} := 0.60 \cdot f_{c.beam}$

$f_{allow3.TopBeam} = 3.90\,ksi$

(4) Tension at bottom of beam only

Limit of tension in bottom of beam.....

$$f_{allow4.BotBeam} := \begin{cases} \left(-0.0948\sqrt{f_{c.beam} \cdot ksi}\right) & \text{if } Environment_{super} = \text{"Extremely"} \\ \left(-0.19\sqrt{f_{c.beam} \cdot ksi}\right) & \text{otherwise} \end{cases}$$

$f_{allow4.BotBeam} = -0.48\,ksi$ *(**Note**: For not worse than moderate corrosion conditions.)*

$Environment_{super} = \text{"Slightly"}$

B4. Service I and III Limit States

At service, check the stresses of the beam at for compression and tension. In addition, the forces in the strands after losses need to be checked.

The actual stress in strand after all losses have occured..... $f_{pe} := f_{pj} - \Delta f_{pT}$

$f_{pe} = 164.4\,ksi$

Allowable stress in strand after all losses have occured..... $f_{pe.Allow} := 0.80 \cdot f_{py}$

$f_{pe.Allow} = 194.4\,ksi$

$$LRFD_{5.9.3} := \begin{cases} \text{"OK, stress at service after losses satisfied"} & \text{if } f_{pe} \le f_{pe.Allow} \\ \text{"NG, stress at service after losses not satisfied"} & \text{otherwise} \end{cases}$$

$LRFD_{5.9.3} = \text{"OK, stress at service after losses satisfied"}$

Calculate the stress due to prestress at the top of slab, top of beam and bottom of beam:

Total force of strands..... $F_{pe} := f_{pe} \cdot A_{ps}$

$F_{pe} = 780\,kip$

Stress at top of beam..... $\sigma_{peTopBeam} := \frac{F_{pe}}{A_{nc.tr}} - \frac{F_{pe} \cdot e_{cg.nc}}{S_{topnc.tr}}$

$\sigma_{peTopBeam} = -0.76\,ksi$

Stress at bottom of beam..... $\sigma_{peBotBeam} := \frac{F_{pe}}{A_{nc.tr}} + \frac{F_{pe} \cdot e_{cg.nc}}{S_{botnc.tr}}$

$\sigma_{peBotBeam} = 2.33\,ksi$

Service I Limit State

The compressive stresses in the top of the beam will be checked for the following conditions:

(1) Sum of effective prestress and permanent loads

(2) Sum of live load and 1/2 sum of effective prestress and permanent loads

(3) Sum of effective prestress and permanent loads and transient loads

*(**Note**: Transient loads can include loads during shipping and handling. For purposes of this design example, these loads are omitted).*

(1) Sum of effective prestress and permanent loads. The stress due to permanent loads can be calculated as follows:

Stress in top of slab..... $\sigma 1_{TopSlab} := \frac{M_{Trb} + M_{Fws} + M_{Utility}}{S_{slab.tr}}$

$\sigma 1_{TopSlab} = 0.08\,ksi$

Stress in top of beam..... $\sigma 1_{TopBeam} := \frac{M_{Beam} + M_{Slab} + M_{Forms}}{S_{topnc.tr}} \ldots + \frac{M_{Trb} + M_{Fws} + M_{Utility}}{S_{top.tr}} \ldots + \sigma_{peTopBeam}$

$\sigma 1_{TopBeam} = 1.63\,ksi$

Check top slab stresses..... $TopSlab1 := if\left(\sigma 1_{TopSlab} \le f_{allow1.TopSlab}, "OK", "NG"\right)$

$TopSlab1 = "OK"$ where $f_{allow1.TopSlab} = 2.03\,ksi$

Check top beam stresses..... $TopBeam1 := if\left(\sigma 1_{TopBeam} \le f_{allow1.TopBeam}, "OK", "NG"\right)$

$TopBeam1 = "OK"$ where $f_{allow1.TopBeam} = 2.93\,ksi$

(2) Sum of live load and 1/2 sum of effective prestress and permanent loads

Stress in top of slab.....

$$\sigma 2_{TopSlab} := 0.5 \cdot \left(\sigma 1_{TopSlab}\right) + \frac{M_{LLI}}{S_{slab.tr}}$$

$\sigma 2_{TopSlab} = 0.62\,ksi$

Stress in top of beam.....

$$\sigma 2_{TopBeam} := 0.5 \cdot \left(\sigma 1_{TopBeam}\right) + \frac{M_{LLI}}{S_{top.tr}}$$

$\sigma 2_{TopBeam} = 1.62\,ksi$

Check top slab stresses.....

$$TopSlab2 := if\left(\sigma 2_{TopSlab} \le f_{allow2.TopSlab}, "OK", "NG"\right)$$

where $f_{allow2.TopSlab} = 1.8\,ksi$

TopSlab2 = "OK"

Check top beam stresses.....

$$TopBeam2 := if\left(\sigma 2_{TopBeam} \le f_{allow2.TopBeam}, "OK", "NG"\right)$$

where $f_{allow2.TopBeam} = 2.6\,ksi$

TopBeam2 = "OK"

(3) Sum of effective prestress, permanent loads and transient loads

Stress in top of slab.....

$$\sigma 3_{TopSlab} := \sigma 1_{TopSlab} + \frac{M_{LLI}}{S_{slab.tr}}$$

$\sigma 3_{TopSlab} = 0.66\,ksi$

Stress in top of beam.....

$$\sigma 3_{TopBeam} := \sigma 1_{TopBeam} + \frac{M_{LLI}}{S_{top.tr}}$$

$\sigma 3_{TopBeam} = 2.44\,ksi$

Check top slab stresses.....

$$TopSlab3 := if\left(\sigma 3_{TopSlab} \le f_{allow3.TopSlab}, "OK", "NG"\right)$$

where $f_{allow3.TopSlab} = 2.7\,ksi$

TopSlab3 = "OK"

Check top beam stresses.....

$$TopBeam3 := if\left(\sigma 3_{TopBeam} \le f_{allow3.TopBeam}, "OK", "NG"\right)$$

where $f_{allow3.TopBeam} = 3.9\,ksi$

TopBeam3 = "OK"

<u>Service III Limit State total stresses</u>

(4) Tension at bottom of beam only

Stress in bottom of beam.....

$$\sigma 4_{BotBeam} := \left(\frac{-M_{Beam} - M_{Slab} - M_{Forms}}{S_{botnc.tr}} \ldots + \frac{-M_{Trb} - M_{Fws} - M_{Utility}}{S_{bot.tr}}\right) \ldots + \sigma_{peBotBeam} + 0.8 \cdot \frac{-M_{LLI}}{S_{bot.tr}}$$

$\sigma 4_{BotBeam} = -0.45\,ksi$

Check bottom beam stresses..... $BotBeam4 := if(\sigma 4_{BotBeam} \geq f_{allow4.BotBeam}, "OK", "NG")$

$BotBeam4 = "OK"$ where $f_{allow4.BotBeam} = -0.48\,ksi$

B5. Strength I Limit State moment capacity [LRFD 5.7.3]

Strength I Limit State design moment.....

$M_r = 875.7\,ft\,kip$

Factored resistance

$M_r = \phi \cdot M_n$

Nominal flexural resistance

$$M_n = A_{ps} \cdot f_{ps} \cdot \left(d_p - \frac{a}{2}\right) + A_s \cdot f_y \cdot \left(d_s - \frac{a}{2}\right) - A'_s \cdot f'_y \cdot \left(d'_s - \frac{a}{2}\right) + 0.85 \cdot f'_c \cdot (b - b_w) \cdot \beta_1 \cdot h_f \cdot \left(\frac{a}{2} - \frac{h_f}{2}\right)$$

For a rectangular, section without compression reinforcement,

$$M_n = A_{ps} \cdot f_{ps} \cdot \left(d_p - \frac{a}{2}\right) + A_s \cdot f_y \cdot \left(d_s - \frac{a}{2}\right)$$ where $a = \beta_1 \cdot c$ and

$$c = \frac{A_{ps} \cdot f_{pu} + A_s \cdot f_y}{0.85 \cdot f'_c \cdot \beta_1 \cdot b + k \cdot A_{ps} \cdot \frac{f_{pu}}{d_p}}$$

In order to determine the average stress in the prestressing steel to be used for moment capacity, a factor "k" needs to be computed.

Value for "k"..... $k := 2\left(1.04 - \frac{f_{py}}{f_{pu}}\right)$

$k = 0.28$

Stress block factor..... $\beta_1 := \max\left[0.85 - 0.05 \cdot \left(\frac{f_{c.beam} - 4000 \cdot psi}{1000 \cdot psi}\right), 0.65\right]$

$\beta_1 = 0.73$

Distance from the compression fiber to cg of prestress..... $d_p := h - strand_{cg} \cdot in$

$d_p = 58.1\,in$

Area of reinforcing mild steel..... $A_s := 0 \cdot in^2$ *(**Note**: For strength calculations, deck reinforcement is conservatively ignored.)*

$A_s = 0\,in^2$

Distance from compression fiber to reinforcing mild steel..... $d_s := 0 \cdot in$

$d_s = 0\,in$

Distance between the neutral axis and compressive face.....

$$c := \frac{A_{ps} \cdot f_{pu} + A_s \cdot f_y}{0.85 \cdot f_{c.beam} \cdot \beta_1 \cdot b_{tr.interior} + k \cdot A_{ps} \cdot \frac{f_{pu}}{d_p}}$$

$c = 3.9\ \text{in}$

Depth of equivalent stress block.....

$$a := \beta_1 \cdot c$$

$a = 2.8\ \text{in}$

Average stress in prestressing steel.....

$$f_{ps} := f_{pu} \cdot \left(1 - k \cdot \frac{c}{d_p}\right)$$

$f_{ps} = 264.9\ \text{ksi}$

Resistance factor for tension and flexure of prestressed members **[LRFD 5.5.4.2]**.....

$\phi' = 1.00$

Moment capacity provided.....

$$M_{r.prov} := \phi' \cdot \left[A_{ps} \cdot f_{ps} \cdot \left(d_p - \frac{a}{2}\right) + A_s \cdot f_y \cdot \left(d_s - \frac{a}{2}\right)\right]$$

$M_{r.prov} = 5937\ \text{ft} \cdot \text{kip}$

Check moment capacity provided exceeds required.....

$$\text{Moment}_{Capacity} := \begin{pmatrix} \text{"OK"} & \text{if } M_{r.prov} \geq M_r \\ \text{"NG"} & \text{otherwise} \end{pmatrix}$$

where $M_r = 875.7\ \text{ft} \cdot \text{kip}$

$\text{Moment}_{Capacity} = \text{"OK"}$

B6. Limits for Reinforcement [LRFD 5.7.3.3]

Maximum Reinforcement

The maximum reinforcement requirements ensure the section has sufficient ductility and is not overreinforced.

Effective depth from extreme compression fiber to centroid of the tensile reinforcement.....

$$d_e := \frac{A_{ps} \cdot f_{ps} \cdot d_p + A_s \cdot f_y \cdot d_s}{A_{ps} \cdot f_{ps} + A_s \cdot f_y}$$

$d_e = 58.1\ \text{in}$

The $\frac{c}{d_e} = 0.07$ ratio should be less than 0.42 to satisfy maximum reinforcement requirements.

$$\text{LRFD}_{5.7.3.3.1} := \begin{cases} \text{"OK, maximum reinforcement requirements for positive moment are satisfied"} & \text{if } \frac{c}{d_e} \leq 0.42 \\ \text{"NG, section is over-reinforced, see LRFD equation C5.7.3.3.1-1"} & \text{otherwise} \end{cases}$$

$\text{LRFD}_{5.7.3.3.1} = \text{"OK, maximum reinforcement requirements for positive moment are satisfied"}$

Minimum Reinforcement

The minimum reinforcement requirements ensure the moment capacity provided is at least 1.2 times greater than the cracking moment.

Modulus of Rupture..... $f_r := -0.24 \cdot \sqrt{f_{c.beam} \cdot ksi}$

$f_r = -0.6\ ksi$

Stress in bottom of beam from Service III.....

$\sigma 4_{BotBeam} = -0.45\ ksi$

Additional amount of stress causing cracking..... $\Delta\sigma := \sigma 4_{BotBeam} - f_r$

$\Delta\sigma = 0.2\ ksi$

Section modulus to bottom of beam.....

$S_b = 17070.1\ in^3$

Additional amount of moment causing cracking..... $\Delta M := \Delta\sigma \cdot S_b$

$\Delta M = 224.3\ kip \cdot ft$

Service III load case moments.....

$M_{Srv3} = 3180.1\ ft \cdot kip$

Moment due to prestressing provided..... $M_{ps} := -(F_{pe} \cdot e_{cg.nc})$

$M_{ps} = -1290.8\ ft \cdot kip$

Cracking moment..... $M_{cr} := (M_{Srv3} + M_{ps}) + \Delta M$

$M_{cr} = 2113.6\ ft \cdot kip$

Required flexural resistance..... $M_{r.reqd} := \min(1.2 \cdot M_{cr}, 133 \cdot \% \cdot M_r)$

$M_{r.reqd} = 1164.6\ ft \cdot kip$

Check that the capacity provided, $M_{r.prov} = 5937\ ft \cdot kip$, exceeds minimum requirements, $M_{r.reqd} = 1164.6\ ft \cdot kip$.

$$LRFD_{5.7.3.3.2} := \begin{cases} \text{"OK, minimum reinforcement for positive moment is satisfied"} & \text{if } M_{r.prov} \geq M_{r.reqd} \\ \text{"NG, reinforcement for positive moment is less than minimum"} & \text{otherwise} \end{cases}$$

$LRFD_{5.7.3.3.2}$ = "OK, minimum reinforcement for positive moment is satisfied"

C. Interior Beam Debonding Requirements

C1. Strand Pattern definition at Support

Define the number of strands and eccentricity of strands from bottom of beam at $Support = 0\,ft$

SUPPORT Strand Pattern Data

Rows of strand from bottom of beam	Input (inches)	Number of strands per row	MIDSPAN	Number of strands per row	SUPPORT	COMMENTS
y9 =	19	n9 =	0	n9 =	0	
y8 =	17	n8 =	0	n8 =	0	
y7 =	15	n7 =	0	n7 =	0	
y6 =	13	n6 =	0	n6 =	0	
y5 =	11	n5 =	0	n5 =	0	
y4 =	9	n4 =	0	n4 =	0	
y3 =	7	n3 =	9	n3 =	9	
y2 =	5	n2 =	11	n2 =	9	
y1 =	3	n1 =	11	n1 =	9	
Strand c.g. =	5.00		31	Total strands =	27	

Area of prestressing steel..... $A_{ps.Support} := (strands_{total} \cdot StrandArea)$

$A_{ps.Support} = 4.1\,in^2$

C2. Stresses at support at release

The losses at release.....

$\Delta f_{pTRelease} = 17.4\,ksi$

Total jacking force of strands..... $F_{pj} := f_{pj} \cdot A_{ps.Support}$

$F_{pj} = 836.5\,kip$

The actual stress in strand after losses at transfer have occured..... $f_{pe} := f_{pj} - \Delta f_{pTRelease}$

$f_{pe} = 185.1\,ksi$

Calculate the stress due to prestress at the top and bottom of beam at release:

Total force of strands..... $F_{pe} := f_{pe} \cdot A_{ps.Support}$

$F_{pe} = 764.6\,kip$

Stress at top of beam at support..... $\sigma_{pjTopEnd} := \left(\frac{F_{pe}}{A_{nc}} - \frac{F_{pe} \cdot e_{cg.nc}}{S_{tnc}} \right)$

$\sigma_{pjTopEnd} = -0.74\,ksi$

Stress at bottom of beam at support...

$$\sigma_{pjBotEnd} := \left(\frac{F_{pe}}{A_{nc}} + \frac{F_{pe} \cdot e_{cg.nc}}{S_{bnc}}\right)$$

$\sigma_{pjBotEnd} = 2.41\,ksi$

$$TopRelease := \begin{cases} \text{"OK"} & \text{if } \sigma_{pjTopEnd} \le 0 \cdot ksi \wedge \sigma_{pjTopEnd} \ge f_{top.outer15} \\ \text{"OK"} & \text{if } \sigma_{pjTopEnd} > 0 \cdot ksi \wedge \sigma_{pjTopEnd} \le f_{ci.beam} \\ \text{"NG"} & \text{otherwise} \end{cases}$$

where $f_{top.outer15} = -0.76\,ksi$

where $f_{ci.beam} = 4\,ksi$

TopRelease = "OK"

$$BotRelease := \begin{cases} \text{"OK"} & \text{if } \sigma_{pjBotEnd} \le f_{ci.beam} \\ \text{"NG"} & \text{if } \sigma_{pjBotEnd} \le 0 \cdot ksi \\ \text{"NG"} & \text{otherwise} \end{cases}$$

where $f_{ci.beam} = 4\,ksi$

BotRelease = "OK"

C3. Strand Pattern definition at Debond1

Define the number of strands and eccentricity of strands from bottom of beam at $Debond1 = 8\,ft$

DEBOND1 Strand Pattern Data

Rows of strand from bottom of beam	Input (inches)	Number of strands per row	MIDSPAN	SUPPORT	Number of strands per row	DEBOND1	COMMENTS
y9 =	19	n9 =	0	0	n9 =	0	
y8 =	17	n8 =	0	0	n8 =	0	
y7 =	15	n7 =	0	0	n7 =	0	
y6 =	13	n6 =	0	0	n6 =	0	
y5 =	11	n5 =	0	0	n5 =	0	
y4 =	9	n4 =	0	0	n4 =	0	
y3 =	7	n3 =	9	9	n3 =	9	
y2 =	5	n2 =	11	9	n2 =	9	
y1 =	3	n1 =	11	9	n1 =	11	
Strand c.g. =	4.86		31	27	Total strands =	29	

Area of prestressing steel.....

$$A_{ps.Debond1} := \left(strands_{total} \cdot StrandArea\right)$$

$A_{ps.Debond1} = 4.4\,in^2$

C4. Stresses at Debond1 at Release

The losses at release.....

$\Delta f_{pTRelease} = 17.4\,ksi$

Total jacking force of strands..... $F_{pj} := f_{pj} \cdot A_{ps.Debond1}$

$F_{pj} = 898.5\,kip$

The actual stress in strand after losses at transfer have occured..... $f_{pe} := f_{pj} - \Delta f_{pTRelease}$

$f_{pe} = 185.1\,ksi$

Calculate the stress due to prestress at the top and bottom of beam at release:

Total force of strands..... $F_{pe} := f_{pe} \cdot A_{ps.Debond1}$

$F_{pe} = 821.2\,kip$

Stress at top of beam at outer 15%..... $\sigma_{pjTop15} := \frac{M_{RelBeamD1}}{S_{tnc}} + \left(\frac{F_{pe}}{A_{nc}} - \frac{F_{pe} \cdot e_{cg.nc}}{S_{tnc}}\right)$

$\sigma_{pjTop15} = -0.43\,ksi$

Stress at bottom of beam at outer 15%... $\sigma_{pjBotBeam} := \frac{-M_{RelBeamD1}}{S_{bnc}} + \left(\frac{F_{pe}}{A_{nc}} + \frac{F_{pe} \cdot e_{cg.nc}}{S_{bnc}}\right)$

$\sigma_{pjBotBeam} = 2.28\,ksi$

$$\sigma_{pjTop15} := \begin{cases} \text{"OK"} & \text{if } \sigma_{pjTop15} \le 0 \cdot ksi \wedge \sigma_{pjTop15} \ge f_{top.outer15} \\ \text{"OK"} & \text{if } \sigma_{pjTop15} > 0 \cdot ksi \wedge \sigma_{pjTop15} \le f_{ci.beam} \\ \text{"NG"} & \text{otherwise} \end{cases}$$

where $f_{top.outer15} = -0.76\,ksi$

where $f_{ci.beam} = 4\,ksi$

$\sigma_{pjTop15} = \text{"OK"}$

$$BotRelease := \begin{cases} \text{"OK"} & \text{if } \sigma_{pjBotBeam} \le f_{ci.beam} \\ \text{"NG"} & \text{if } \sigma_{pjBotBeam} \le 0 \cdot ksi \\ \text{"NG"} & \text{otherwise} \end{cases}$$

where $f_{ci.beam} = 4\,ksi$

$BotRelease = \text{"OK"}$

C5. Strand Pattern definition at Debond2

Define the number of strands and eccentricity of strands from bottom of beam at $Debond2 = 16\,ft$

DEBOND2 Strand Pattern Data

Rows of strand from bottom of beam	Input (inches)	Number of strands per	MIDSPAN	SUPPORT	DEBOND1	Number of strands per row	DEBOND2	COMMENTS
y9 =	19	n9 =	0	0	0	n9 =	0	
y8 =	17	n8 =	0	0	0	n8 =	0	
y7 =	15	n7 =	0	0	0	n7 =	0	
y6 =	13	n6 =	0	0	0	n6 =	0	
y5 =	11	n5 =	0	0	0	n5 =	0	
y4 =	9	n4 =	0	0	0	n4 =	0	
y3 =	7	n3 =	9	9	9	n3 =	9	
y2 =	5	n2 =	11	9	9	n2 =	11	
y1 =	3	n1 =	11	9	11	n1 =	11	
Strand c.g. =	4.87		31	27	29	Total strands =	31	All strands are active beyond this point

Area of prestressing steel.....

$A_{ps.Debond2} := (strands_{total} \cdot StrandArea)$

$A_{ps.Debond2} = 4.7\,in^2$

C6. Stresses at Debond2 at Release

The losses at release.....

$\Delta f_{pTRelease} = 17.4\,ksi$

Total jacking force of strands.....

$F_{pj} := f_{pj} \cdot A_{ps.Debond2}$

$F_{pj} = 960.5\,kip$

The actual stress in strand after losses at transfer have occured.....

$f_{pe} := f_{pj} - \Delta f_{pTRelease}$

$f_{pe} = 185.1\,ksi$

Calculate the stress due to prestress at the top and bottom of beam at release:

Total force of strands.....

$F_{pe} := f_{pe} \cdot A_{ps.Debond2}$

$F_{pe} = 877.8\,kip$

Stress at top of beam at outer 15%.....

$$\sigma_{pjTop15} := \frac{M_{RelBeamD2}}{S_{tnc}} + \left(\frac{F_{pe}}{A_{nc}} - \frac{F_{pe} \cdot e_{cg.nc}}{S_{tnc}}\right)$$

$\sigma_{pjTop15} = -0.2\,ksi$

Stress at bottom of beam at outer 15%...

$$\sigma_{pjBotBeam} := \frac{-M_{RelBeamD2}}{S_{bnc}} + \left(\frac{F_{pe}}{A_{nc}} + \frac{F_{pe} \cdot e_{cg.nc}}{S_{bnc}}\right)$$

$$\sigma_{pjBotBeam} = 2.22\,ksi$$

$$\sigma_{pjTop15} := \begin{cases} \text{"OK"} & \text{if } \sigma_{pjTop15} \le 0 \cdot ksi \wedge \sigma_{pjTop15} \ge f_{top.outer15} \\ \text{"OK"} & \text{if } \sigma_{pjTop15} > 0 \cdot ksi \wedge \sigma_{pjTop15} \le f_{ci.beam} \\ \text{"NG"} & \text{otherwise} \end{cases}$$

where $f_{top.outer15} = -0.76\,ksi$

where $f_{ci.beam} = 4\,ksi$

$$\sigma_{pjTop15} = \text{"OK"}$$

$$BotRelease := \begin{cases} \text{"OK"} & \text{if } \sigma_{pjBotBeam} \le f_{ci.beam} \\ \text{"NG"} & \text{if } \sigma_{pjBotBeam} \le 0 \cdot ksi \\ \text{"NG"} & \text{otherwise} \end{cases}$$

where $f_{ci.beam} = 4\,ksi$

$$BotRelease = \text{"OK"}$$

D. Shear Design

D1. Determine Nominal Shear Resistance

The nominal shear resistance, Vn, shall be determined as the lesser of:

$$V_n = V_c + V_s + V_p$$

$$V_n = 0.25 \cdot f'_c \cdot b_v \cdot d_v$$

The shear resistance of a concrete member may be separated into a component, V_c, that relies on tensile stresses in the concrete, a component, V_s, that relies on tensile stresses in the transverse reinforcement, and a component, V_p, that is the vertical component of the prestressing force.

Nominal shear resistance of concrete section..... $V_c = 0.0316 \cdot \beta \cdot \sqrt{f'_c} \cdot b_v \cdot d_v$

Nominal shear resistance of shear reinforcement section..... $V_s = \dfrac{A_v \cdot f_y \cdot d_v \cdot \cot(\theta)}{s}$

Nominal shear resistance from prestressing for straight strands (non-draped)..... $V_p := 0 \cdot kip$

Effective shear depth..... $d_v := \max\left(d_s - \dfrac{a}{2}, 0.9 \cdot d_s, 0.72 \cdot h\right)$

$d_v = 45.4\,in$ or $d_v = 3.8\,ft$

*(**Note**: This location is the same location as previously estimated for* $ShearChk = 3.8\,ft$ *.)*

D2. b and q Parameters [LRFD 5.8.3.4.2]

Tables are give in LRFD to determine β from the longitudinal strain and $\dfrac{v}{f'_c}$ parameter, so these values need to be calculated.

Longitudinal strain for sections with prestressing and transverse reinforcement. $\varepsilon_x = \dfrac{\dfrac{M_u}{d_v} + 0.5 \cdot V_u \cdot \cot(\theta) - A_{ps} \cdot f_{po}}{2 \cdot (E_s \cdot A_s + E_p \cdot A_{ps})}$

Effective width..... $b_v := b_w$ where $b_v = 8\,in$

Effective shear depth..... $d_v = 3.8\,ft$

Factor indicating ability of diagonally cracked concrete to transmit tension.. β

*(**Note**: Values of $\beta = 2$ and $\theta = 45 \cdot deg$ cannot be assumed since beam is prestressed.)*

Angle of inclination for diagonal compressive stresses..... θ

LRFD Table 5.8.3.4.2-1 presents values of θ and β for sections with transverse reinforcement . LRFD C5.8.3.4.2 states that data given by the table may be used over a range of values. Linear interpolation may be used, but is not recommended for hand calculations.

$\frac{v}{f'_c}$	ε_x x 1,000										
	≤-0.20	≤-0.10	≤-0.05	≤0	≤0.125	≤0.25	≤0.50	≤0.75	≤1.00	≤1.50	≤2.00
≤0.075	22.3 6.32	20.4 4.75	21.0 4.10	21.8 3.75	24.3 3.24	26.6 2.94	30.5 2.59	33.7 2.38	36.4 2.23	40.8 1.95	43.9 1.67
≤0.100	18.1 3.79	20.4 3.38	21.4 3.24	22.5 3.14	24.9 2.91	27.1 2.75	30.8 2.50	34.0 2.32	36.7 2.18	40.8 1.93	43.1 1.69
≤0.125	19.9 3.18	21.9 2.99	22.8 2.94	23.7 2.87	25.9 2.74	27.9 2.62	31.4 2.42	34.4 2.26	37.0 2.13	41.0 1.90	43.2 1.67
≤0.150	21.6 2.88	23.3 2.79	24.2 2.78	25.0 2.72	26.9 2.60	28.8 2.52	32.1 2.36	34.9 2.21	37.3 2.08	40.5 1.82	42.8 1.61
≤0.175	23.2 2.73	24.7 2.66	25.5 2.65	26.2 2.60	28.0 2.52	29.7 2.44	32.7 2.28	35.2 2.14	36.8 1.96	39.7 1.71	42.2 1.54
≤0.200	24.7 2.63	26.1 2.59	26.7 2.52	27.4 2.51	29.0 2.43	30.6 2.37	32.8 2.14	34.5 1.94	36.1 1.79	39.2 1.61	41.7 1.47
≤0.225	26.1 2.53	27.3 2.45	27.9 2.42	28.5 2.40	30.0 2.34	30.8 2.14	32.3 1.86	34.0 1.73	35.7 1.64	38.8 1.51	41.4 1.39
≤0.250	27.5 2.39	28.6 2.39	29.1 2.33	29.7 2.33	30.6 2.12	31.3 1.93	32.8 1.70	34.3 1.58	35.8 1.50	38.6 1.38	41.2 1.29

The longitudinal strain and $\frac{v}{f'_c}$ parameter are calculated for the appropriate critical sections.

The shear stress on the concrete shall be determined as [LRFD 5.8.2.9-1]:

$$v = \frac{V_u - \phi \cdot V_p}{\phi \cdot b_v \cdot d_v}$$

Factored shear force at the critical section

$V_u = 267.5\,kip$

Shear stress on the section..... $v := \frac{V_u - \phi_v \cdot V_p}{\phi_v \cdot b_v \cdot d_v}$

$v = 0.82\,ksi$

Parameter for locked in difference in strain between prestressing tendon and concrete. $f_{po} := 0.7 \cdot f_{pu}$

$f_{po} = 189\,ksi$

The prestressing strand force becomes effective with the transfer length..... $L_{transfer} := 60 \cdot strand_{dia}$

$L_{transfer} = 2.5\ ft$

Since the transfer length, $L_{transfer} = 2.5\ ft$, is less than the shear check location, $ShearChk = 3.8\ ft$, from the end of the beam, the full force of the strands are effective.

Factored moment on section..... $M_u := \max(M_r, V_u \cdot d_v)$

$M_u = 1011.3\ ft \cdot kip$

For the longitudinal strain calculations, an initial assumption for θ must be made.....

$\theta := 24.2 \cdot deg$

Longitudinal strain.....

$$\varepsilon_x := \frac{\frac{M_u}{d_v} + 0.5 \cdot V_u \cdot \cot(\theta) - A_{ps.Support} \cdot f_{po}}{2 \cdot (E_s \cdot A_s + E_p \cdot A_{ps.Support})} \cdot (1000)$$

$\varepsilon_x = -0.92$

Since the strain value is negative, the strain needs to be recalculated as per **LRFD equation 5.8.3.4.2-3**:

whereas

$$e_x = \frac{\frac{M_u}{d_v} + 0.5 \cdot V_u \cdot \cot(\theta) - A_{ps} \cdot f_{po}}{2 \cdot (E_c \cdot A_c + E_s \cdot A_s + E_p \cdot A_{ps})}$$

Area of the concrete on the tension side of the member.....

$$A_c := \frac{A_{nc}}{h_{nc}} \cdot \frac{h}{2}$$

*(**Note**: The non-composite area of the beam is divided by its height, then multiplied by one-half of the composite section height).*

$A_c = 460.2\ in^2$

Recalculating the strain,

Longitudinal strain.....

$$\varepsilon_x := \frac{\frac{M_u}{d_v} + 0.5 \cdot V_u \cdot \cot(\theta) - A_{ps.Support} \cdot f_{po}}{2 \cdot (E_{c.beam} \cdot A_c + E_s \cdot A_s + E_p \cdot A_{ps.Support})} \cdot (1000)$$

$\varepsilon_x = -0.05$

$\frac{v}{f'_c}$ parameter..... $\frac{v}{f_{c.beam}} = 0.126$

Based on **LRFD Table 5.8.3.4.2-1**, the values of θ and β can be approximately taken as:

Angle of inclination of compression stresses

$\theta = 24.2\,deg$

Factor relating to longitudinal strain on the shear capacity of concrete

$\beta := 2.78$

Nominal shear resistance of concrete section..... $V_c := 0.0316 \cdot \beta \cdot \sqrt{f_{c.beam} \cdot ksi} \cdot b_v \cdot d_v$

$V_c = 81.3\,kip$

Stirrups

Size of stirrup bar ("4" "5" "6")... bar := "5"

Area of shear reinforcement..... $A_v = 0.620\,in^2$

Diameter of shear reinforcement..... $dia = 0.625\,in$

Nominal shear strength provided by shear reinforcement

$V_n = V_c + V_p + V_s$

where..... $V_n := \min\left(\frac{V_u}{\phi_v}, 0.25 \cdot f_{c.beam} \cdot b_v \cdot d_v + V_p\right)$

$V_n = 297.3\,kip$

and..... $V_s := V_n - V_c - V_p$

$V_s = 216.0\,kip$

Spacing of stirrups

Minimum transverse reinforcement..... $s_{min} := \frac{A_v \cdot f_y}{0.0316 \cdot b_v \cdot \sqrt{f_{c.beam} \cdot ksi}}$

$s_{min} = 57.7\,in$

Transverse reinforcement required..... $s_{req} := \text{if}\left(V_s \le 0, s_{min}, \frac{A_v \cdot f_y \cdot d_v \cdot \cot(\theta)}{V_s}\right)$

$s_{req} = 17.4\,in$

Minimum transverse reinforcement required..... $s := \min(s_{min}, s_{req})$

$s = 17.4\,in$

Maximum transverse reinforcement

$$s_{max} := \text{if}\left[\frac{V_u - \phi_v \cdot V_p}{\phi_v \cdot (b_v \cdot d_v)} < 0.125 \cdot f_{c.beam}, \min(0.8 \cdot d_v, 24 \cdot in), \min(0.4 \cdot d_v, 12 \cdot in)\right]$$

$$s_{max} = 12\,in$$

Spacing of transverse reinforcement
cannot exceed the following spacing.....

$$spacing := \text{if}(s_{max} > s, s, s_{max})$$

$$spacing = 12.0\,in$$

D3. Longitudinal Reinforcement

For sections not subjected to torsion, longitudinal reinforcement shall be proportioned so that at each section the tensile capacity of the reinforcement on the flexural tension side of the member, taking into account any lack of full development of that reinforcement.

General equation for force in longitudinal reinforcement

$$T = \frac{M_u}{d_v \cdot \phi_b} + \left(\frac{V_u}{\phi_v} - 0.5 \cdot V_s - V_p\right) \cdot \cot(\theta)$$

where.....

$$V_s := \min\left(\frac{A_v \cdot f_y \cdot d_v \cdot \cot(\theta)}{spacing}, \frac{V_u}{\phi_v}\right)$$

$$V_s = 297.3\,kip$$

and.....

$$T := \frac{M_u}{d_v \cdot \phi} + \left(\frac{V_u}{\phi_v} - 0.5 \cdot V_s - V_p\right) \cdot \cot(\theta)$$

$$T = 628.0\,kip$$

<u>At the shear check location</u>

Longitudinal reinforcement, previously
computed for positive moment design.....

$$A_{ps.Support} = 4.1\,in^2$$

Equivalent force provided by this steel.....

$$T_{psShearChk} := A_{ps.Support} \cdot f_{pe}$$

$$T_{psShearChk} = 764.6\,kip$$

$$LRFD_{5.8.3.5} := \begin{cases} \text{"Ok, positive moment longitudinal reinforcement is adequate"} & \text{if } T_{psShearChk} \geq T \\ \text{"NG, positive moment longitudinal reinforcement provided"} & \text{otherwise} \end{cases}$$

$$LRFD_{5.8.3.5} = \text{"Ok, positive moment longitudinal reinforcement is adequate"}$$

<u>At the support location</u>

General equation for force in longitudinal reinforcement

$$T = \frac{M_u}{d_v \cdot \phi_b} + \left(\frac{V_u}{\phi_v} - 0.5 \cdot V_s - V_p\right) \cdot \cot(\theta) \qquad \text{where } M_u = 0 \cdot ft \cdot kip$$

where..... $V_s := \min\left(\frac{A_v \cdot f_y \cdot d_v \cdot \cot(\theta)}{spacing}, \frac{V_{u.Support}}{\phi_v}\right)$

$V_s = 312.9\,kip$

and..... $T := \left(\frac{V_{u.Support}}{\phi_v} - 0.5 \cdot V_s - V_p\right) \cdot \cot(\theta)$

$T = 371.1\,kip$

In determining the tensile force that the reinforcement is expected to resist at the inside edge of the bearing area, the values calculated at $d_v = 3.8\,ft$ from the face of the support may be used. Note that the force is greater due to the contribution of the moment at d_v. For this example, the actual values at the face of the support will be used.

Longitudinal reinforcement, previously computed for positive moment design.....

$A_{ps.Support} = 4.1\,in^2$

The prestressing strand force is not all effective at the support area due to the transfer length required to go from zero force to maximum force. A factor will be applied that takes this into account.

Transfer length..... $L_{transfer} = 30\,in$

Distance from center line of bearing to end of beam..... $J = 6\,in$

Estimated length of bearing pad..... $L_{pad} := 12 \cdot in$

*(**Note !** - this dimension needs to be increased since the edge of pad should be about 1-1/2" from the edge of the beam. Override and use the following: $J := 8.5 \cdot in$)*

Determine the force effective at the inside edge of the bearing area.

Factor to account for effective force..... $Factor := \frac{J + \frac{L_{pad}}{2}}{L_{transfer}}$

$Factor = 0.5$

Equivalent force provided by this steel..... $T_{psSupport} := A_{ps.Support} \cdot f_{pe} \cdot Factor$

$T_{psSupport} = 369.5\,kip$

$$LRFD_{5.8.3.5} := \begin{cases} \text{"Ok, positive moment longitudinal reinforcement is adequate"} & \text{if } T_{psSupport} \geq T \\ \text{"NG, positive moment longitudinal reinforcement provided"} & \text{otherwise} \end{cases}$$

$LRFD_{5.8.3.5} =$ "NG, positive moment longitudinal reinforcement provided"

In otder to satisfy the equation, we increase the shear steel contribution by specifying the actual stirrup spacing used at this location. Assume stirrups are at the following spacing.

$spacing := 11 \cdot in$

*(**Note**: Decreasing the spacing will not improve V_s since it will then be a function of the shear at the support and not the shear steel).*

re-computing.....

$$V_s := \min\left(\frac{A_v \cdot f_y \cdot d_v \cdot \cot(\theta)}{spacing}, \frac{V_{u.Support}}{\phi_v}\right)$$

$V_s = 323.2\,kip$

and.....

$$T := \left(\frac{V_{u.Support}}{\phi_v} - 0.5 \cdot V_s - V_p\right) \cdot \cot(\theta)$$

$T = 359.6\,kip$

Equivalent force provided by this steel.....

$$T_{psSupport} := A_{ps.Support} \cdot f_{pe} \cdot Factor$$

$T_{psSupport} = 369.5\,kip$

$$LRFD_{5.8.3.5} := \begin{cases} \text{"Ok, positive moment longitudinal reinforcement is adequate"} & \text{if } T_{psSupport} \geq T \\ \text{"NG, positive moment longitudinal reinforcement provided"} & \text{otherwise} \end{cases}$$

$LRFD_{5.8.3.5} = \text{"Ok, positive moment longitudinal reinforcement is adequate"}$

*(**Note**: The location of the bearing pad had to be moved in order to satisfy this criteria. It will now provide 2-1/2" from the edge of the pad to the end of the beam. The engineer needs to assure that this is properly detailed and adhered to in the plans).*

Several important design checks were not performed in this design example (to reduce the length of calculations). However, the engineer should assure that the following has been done at a minimum:

- Design for interface steel
- Design for anchorage steel
- Design for camber
- Design check for beam transportation loads
- Design for fatigue checks when applicable

E. Summary

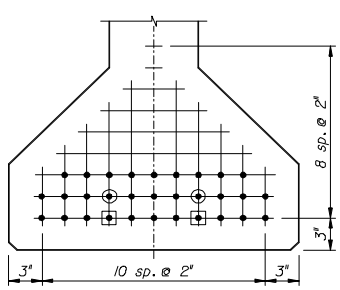

TYPE (1) 31 STRANDS

STRAND DEBONDING LEGEND

- fully bonded strands.
- strands debonded 8'-0" from end of beam.
- strands debonded 16'-0" from end of beam.
- strands debonded _'-__" from end of beam.
- strands debonded _'-__" from end of beam.

NOTE: On beams with skewed ends the debonded length shall be measured along the debonded strand.

STRAND DESCRIPTION: Use 0.5" Diameter, Grade 270, Lo-lax 0.5" Strands stressed at 31.0 kips each. Area per strand equals 0.153 sq. in.

STRAND PATTERNS

Defined Units

Prestressed Beam Design - Part II

Reference

Reference:F:\HDRDesignExamples\Ex1_PCBeam\203LLs.mcd(R)

Description

This section provides the design of the prestressed concrete beam - exterior beam design.

Page Contents

Page	Contents
84	**Design changes from Interior beam design**
86	**A. Input Variables**
	A1. Bridge Geometry
	A2. Section Properties
	A3. Superstructure Moments at Midspan
	A4. Superstructure Loads at Debonding Locations
	A5. Superstructure Loads at the Other Locations
89	**B. Interior Beam Midspan Moment Design**
	B1. Strand Pattern definition at Midspan
	B2. Prestressing Losses [LRFD 5.9.5]
	B3. Stress Limits (Compression = +, Tension = -)
	B4. Service I and III Limit States
	B5. Strength I Limit State moment capacity [LRFD 5.7.3]
	B6. Limits for Reinforcement [LRFD 5.7.3.3]
104	**C. Interior Beam Debonding Requirements**
	C1. Strand Pattern definition at Support
	C2. Stresses at support at release
	C3. Strand Pattern definition at Debond1
	C4. Stresses at Debond1 at Release
	C5. Strand Pattern definition at Debond2
	C6. Stresses at Debond2 at Release
109	**D. Shear Design**
	D1. Determine Nominal Shear Resistance
	D2. b and q Parameters [LRFD 5.8.3.4.2]
	D3. Longitudinal Reinforcement
116	**E. Summary**

DESIGN CHANGES FROM INTERIOR BEAM DESIGN

The FDOT Prestressed beam program was utilized to quickly determine if the exact strand pattern used in the interior beam design will work for the exterior. For the exterior, there was insufficient moment capacity provided at midspan. In order to achieve the moment capacity, the number of strands were increased from 31 to 38.

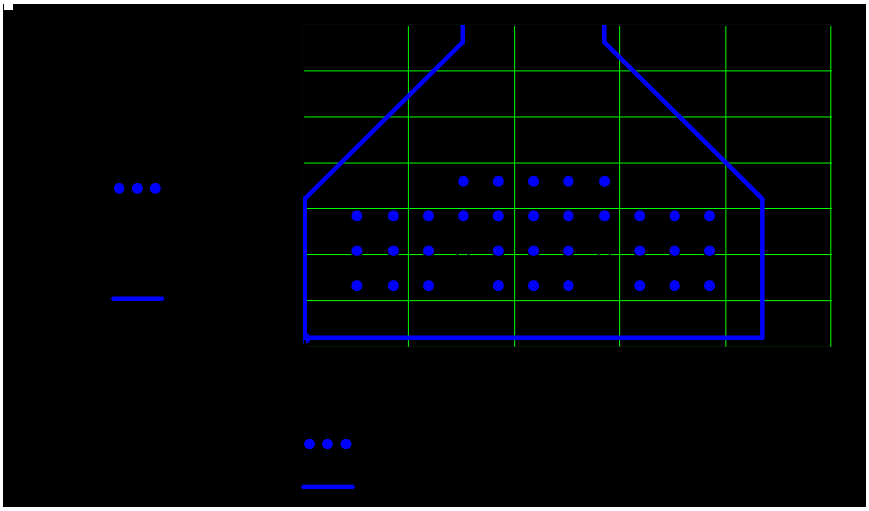

TotalNumberOfTendons = **38**

NumberOfDebondedTendons = **4**

NumberOfDrapedTendons = **0**

StrandSize = **"1/2 in low lax"**

StrandArea = **0.153** in^2

$JackingForce_{per.strand}$ = **30.982** kip

By examining the figure below, it will be obvious that the beam section will not work with straight strands since debonding would be required for almost up to 10 feet from midspan in either direction.

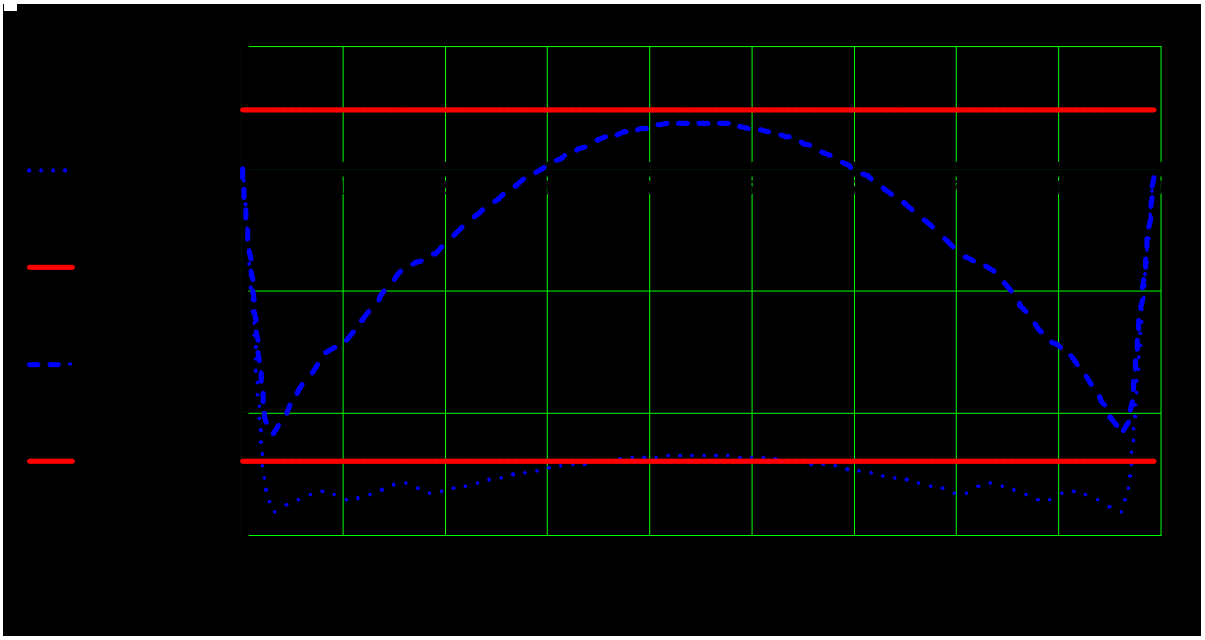

FDOT SDG states to consider the individual beams designs as a first trial subject to modifications by combining similar designs into groups of common materials and stranding based upon the following priorities:

1.) 28-Day Compressive Concrete Strength (f'c)
2.) Stranding (size, number, and location)
3.) Compressive Concrete Strength at Release (f'ci)
4.) Shielding (Debonding)*

The solution chosen is to increase the release strength of the concrete. In the interior beam design, the minimum value of $f_{ci.beam.min} = 4\ ksi$ was utilized. Since the exterior beam governs, we will use the maximum value allowed, $f_{ci.beam.max} = 5.2\ ksi$. for this design example for both beams. The following file shows the design of the exterior beam with the following strand pattern.

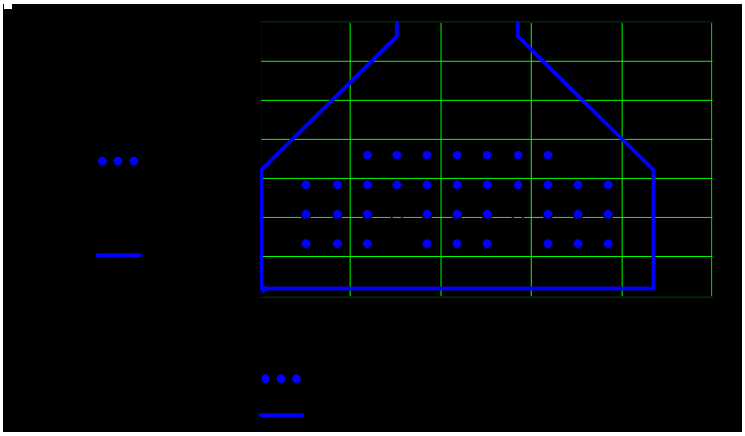

TotalNumberOfTendons = **40**

NumberOfDebondedTendons = **4**

NumberOfDrapedTendons = **0**

StrandSize = **"1/2 in low lax"**

StrandArea = **0.153** in^2

$JackingForce_{per.strand}$ = **30.982** kip

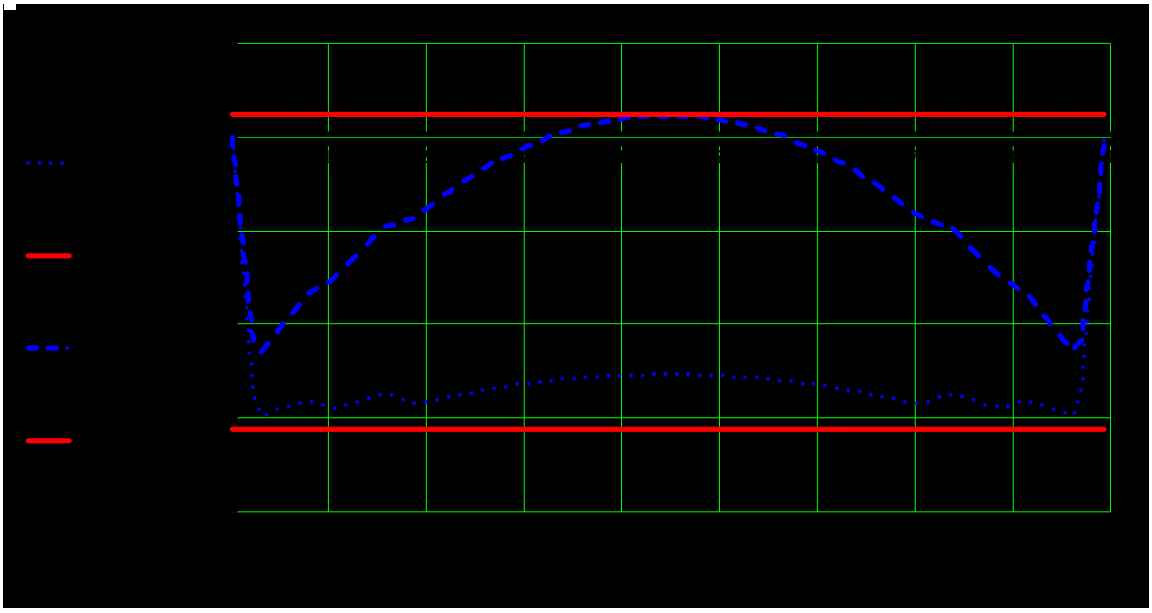

New values for release strength

Release strength..... $f_{ci.beam} := f_{ci.beam.max}$

$f_{ci.beam} = 5.2\ ksi$

Modulus of elasticity..... $E_{ci.beam} := \phi_{limerock} \cdot 1820 \sqrt{f_{ci.beam} \cdot ksi}$

$E_{ci.beam} = 3735\ ksi$

A. Input Variables

A1. Bridge Geometry

Overall bridge length..... $L_{bridge} = 180\,ft$

Design span length..... $L_{span} = 90\,ft$

Skew angle..... $Skew = -30\,deg$

A2. Section Properties

NON-COMPOSITE PROPERTIES			IV
Moment of Inertia	[in⁴]	I_{nc}	260741
Section Area	[in²]	A_{nc}	789
ytop	[in]	yt_{nc}	29.27
ybot	[in]	yb_{nc}	24.73
Depth	[in]	h_{nc}	54
Top flange width	[in]	b_{tf}	20
Top flange depth	[in]	h_{tf}	8
Width of web	[in]	b_w	8
Bottom flange width	[in]	b_{bf}	26
Bottom flange depth	[in]	h_{bf}	8
Bottom flange taper	[in]	E	9
Section Modulus top	[in³]	S_{tnc}	8908
Section Modulus bottom	[in³]	S_{bnc}	10544

COMPOSITE SECTION PROPERTIES			INTERIOR	EXTERIOR
Effective slab width	[in]	$b_{eff.interior/exterior}$	96.0	101.0
Transformed slab width	[in]	$b_{tr.interior/exterior}$	79.9	84.0
Height of composite section	[in]	h	63.0	63.0
Effective slab area	[in²]	A_{slab}	639.0	672.3
Area of composite section	[in²]	$A_{Interior/Exterior}$	1448.0	1481.3
Neutral axis to bottom fiber	[in]	y_b	40.3	40.7
Neutral axis to top fiber	[in]	y_t	22.7	22.7
Inertia of composite section	[in⁴]	$I_{Interior/Exterior}$	682912.0	694509.4
Section modulus top of slab	[in³]	S_t	30037.5	31123.9
Section modulus top of beam	[in³]	S_{tb}	49719.4	52162.4
Section modulus bottom of beam	[in³]	S_b	16960.6	17070.1

A3. Superstructure Loads at Midspan

DC Moment of Beam at Release..... $M_{RelBeam} := M_{RelBeamExt}(Midspan)$

$M_{RelBeam} = 816.7\,ft \cdot kip$

DC Moment of Beam..... $M_{Beam} := M_{BeamExt}(Midspan)$

$M_{Beam} = 798.6\,ft \cdot kip$

DC Moment of Slab..... $M_{Slab} := M_{SlabExt}(Midspan)$

$M_{Slab} = 850.2\,ft \cdot kip$

DC Moment of stay-in-place forms..... $M_{Forms} := M_{FormsExt}(Midspan)$

$M_{Forms} = 61.5\,ft \cdot kip$

DC Moment of traffic railing barriers..... $M_{Trb} := M_{TrbExt}(Midspan)$

$M_{Trb} = 238.4\,ft \cdot kip$

DW Moment of future wearing surface.... $M_{Fws} := M_{FwsExt}(Midspan)$

$M_{Fws} = 102\,ft \cdot kip$

DW Moment of Utilities..... $M_{Utility} := M_{UtilityExt}(Midspan)$

$M_{Utility} = 0\,ft \cdot kip$

Live Load Moment..... $M_{LLI} := M_{LLI.Exterior}(Midspan)$

$M_{LLI} = 2034.7\,ft \cdot kip$

$M_{Fatigue} = 1412.9\,ft \cdot kip$ $M_{Fatigue} := M_{LLI.Exterior}(Midspan) - M_{lane}(Midspan)$

$Service1 = 1.0 \cdot DC + 1.0 \cdot DW + 1.0 \cdot LL$

- Service I Limit State..... $M_{Srv1} := 1.0 \cdot (M_{Beam} + M_{Slab} + M_{Forms} + M_{Trb}) \ldots + 1.0 \cdot (M_{Fws} + M_{Utility}) + 1.0 \cdot (M_{LLI})$

  $M_{Srv1} = 4085.5\,ft\,kip$

$Service3 = 1.0 \cdot DC + 1.0 \cdot DW + 0.8 \cdot LL$

- Service III Limit State..... $M_{Srv3} := 1.0 \cdot (M_{Beam} + M_{Slab} + M_{Forms} + M_{Trb}) \ldots + 1.0 \cdot (M_{Fws} + M_{Utility}) + 0.8 \cdot (M_{LLI})$

  $M_{Srv3} = 3678.6\,ft\,kip$

$Strength1 = 1.25 \cdot DC + 1.50 \cdot DW + 1.75 \cdot LL$

- Strength I Limit State..... $M_r := 1.25 \cdot (M_{Beam} + M_{Slab} + M_{Forms} + M_{Trb}) \ldots + 1.50 \cdot (M_{Fws} + M_{Utility}) + 1.75 \cdot (M_{LLI})$

  $M_r = 6149.8\,ft\,kip$

$Fatigue = 0.75 \cdot LL$

- Fatigue Limit State..... $M_{Fatigue} := 0.75 \cdot M_{Fatigue}$ *(**Note**: Use NO LANE load).*

  $M_{Fatigue} = 1059.7\,ft\,kip$

A4. Superstructure Loads at Debonding Locations

DC Moment of Beam at Release -
$Debond1 = 8\,ft$ Location..... $M_{RelBeamD1} := M_{RelBeamExt}(Debond1)$

$M_{RelBeamD1} = 266.8\,ft \cdot kip$

DC Moment of Beam at Release -
$Debond2 = 16\,ft$ Location..... $M_{RelBeamD2} := M_{RelBeamExt}(Debond2)$

$M_{RelBeamD2} = 481.1\,ft \cdot kip$

A5. Superstructure Loads at the Other Locations

At Support location

DC Shear & Moment..... $V_{DC.BeamExt}(Support) = 89.9\,kip$ $M_{DC.BeamExt}(Support) = 0\,ft\,kip$

DW Shear & Moment .... $V_{DW.BeamExt}(Support) = 4.6\,kip$ $M_{DW.BeamExt}(Support) = 0\,ft\,kip$

LL Shear & Moment.. .... $V_{LLI.Exterior}(Support) = 111.3\,kip$ $M_{LLI.Exterior}(Support) = 0\,ft\,kip$

$Strength1 = 1.25 \cdot DC + 1.50 \cdot DW + 1.75 \cdot LL$

- Strength I Limit State.....

$V_{u.Support} := 1.25 \cdot \left(V_{DC.BeamExt}(Support)\right) \ldots + 1.50 \cdot \left(V_{DW.BeamExt}(Support)\right) \ldots + 1.75 \cdot \left(V_{LLI.Exterior}(Support)\right)$

$V_{u.Support} = 314.1\,kip$

At Shear Check location

DC Shear & Moment..... $V_{DC.BeamExt}(ShearChk) = 80.8\,kip$ $M_{DC.BeamExt}(ShearChk) = 319.9\,ft\,kip$

DW Shear & Moment .... $V_{DW.BeamExt}(ShearChk) = 4.2\,kip$ $M_{DW.BeamExt}(ShearChk) = 16.7\,ft\,kip$

LL Shear & Moment.. .... $V_{LLI.Exterior}(ShearChk) = 104.9\,kip$ $M_{LLI.Exterior}(ShearChk) = 353.6\,ft\,kip$

$Strength1 = 1.25 \cdot DC + 1.50 \cdot DW + 1.75 \cdot LL$

- Strength I Limit State.....

$V_u := 1.25 \cdot \left(V_{DC.BeamExt}(ShearChk)\right) \ldots + 1.50 \cdot \left(V_{DW.BeamExt}(ShearChk)\right) \ldots + 1.75 \cdot \left(V_{LLI.Exterior}(ShearChk)\right)$

$V_u = 291.0\,kip$

$M_r := 1.25 \cdot \left(M_{DC.BeamExt}(ShearChk)\right) \ldots + 1.50 \cdot \left(M_{DW.BeamExt}(ShearChk)\right) \ldots + 1.75 \cdot \left(M_{LLI.Exterior}(ShearChk)\right)$

$M_r = 1043.8\,ft\,kip$

B. Interior Beam Midspan Moment Design

B1. Strand Pattern definition at Midspan

Using the following schematic, the proposed strand pattern at the midspan section can be defined.

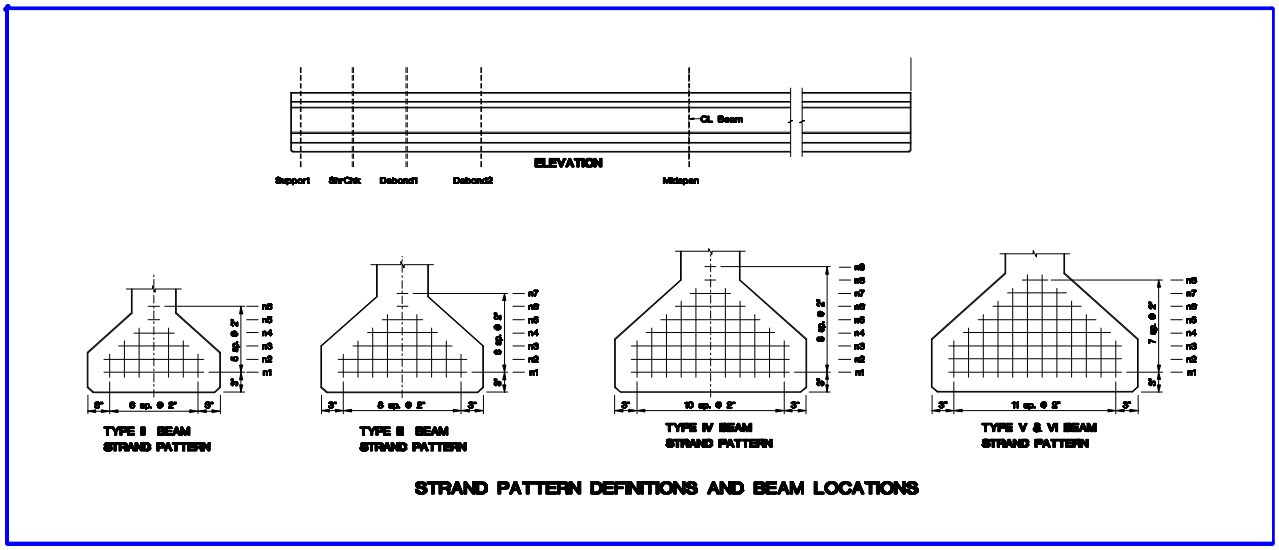

Support = 0 ft ShearChk = 3.8 ft Debond1 = 8 ft Debond2 = 16 ft Midspan = 44.08 ft

Strand pattern at midspan

Strand type..... $strand_{type} := \text{"LowLax"}$ *(**Note**: Options* ("LowLax" "StressRelieved")

$strand_{type} = \text{"LowLax"}$

Strand size..... $strand_{dia} := 0.5 \cdot in$ *(**Note**: Options* $(0.5 \cdot in \quad 0.5625 \cdot in \quad 0.6 \cdot in)$

$strand_{dia} = 0.5\ in$

Strand area..... $StrandArea := \left(\begin{array}{l} 0.153 \ \text{ if } strand_{dia} = 0.5 \cdot in \\ 0.192 \ \text{ if } strand_{dia} = 0.5625 \cdot in \\ 0.217 \ \text{ if } strand_{dia} = 0.6 \cdot in \\ 0.0 \ \text{ otherwise} \end{array} \right) \cdot in^2$

$StrandArea = 0.153\ in^2$

Define the number of strands and eccentricity of strands from bottom of beam.....

BeamType = "IV"

MIDSPAN Strand Pattern Data

Rows of strand from bottom of beam	Input (inches)	Number of strands per row	MIDSPAN
y9 =	19	n9 =	0
y8 =	17	n8 =	0
y7 =	15	n7 =	0
y6 =	13	n6 =	0
y5 =	11	n5 =	0
y4 =	9	n4 =	7
y3 =	7	n3 =	11
y2 =	5	n2 =	11
y1 =	3	n1 =	11
Strand c.g. =	5.70	Total strands =	40

Area of prestressing steel.....

$A_{ps} := (strands_{total} \cdot StrandArea)$

$A_{ps} = 6.1\ in^2$

Transformed section properties

As per **SDG 4.3.1-C6**, states *"**Stress and camber** calculations for the design of simple span, pretensioned components must be based upon the use of transformed section properties."*

Modular ratio between the prestressing strand and beam. .....

$n_p := \frac{E_p}{E_{c.beam}}$

$n_p = 6.825$

Non-composite area transformed.....

$A_{nc.tr} := A_{nc} + (n_p - 1) \cdot A_{ps}$

$A_{nc.tr} = 824.6\ in^2$

Non-composite neutral axis transformed...

$yb_{nc.tr} := \frac{yb_{nc} \cdot A_{nc} + strand_{cg} \cdot in \cdot [(n_p - 1) \cdot A_{ps}]}{A_{nc.tr}}$

$yb_{nc.tr} = 23.9\ in$

Non-composite inertia transformed.....

$I_{nc.tr} := I_{nc} + (yb_{nc.tr} - strand_{cg} \cdot in)^2 \cdot [(n_p - 1) \cdot A_{ps}]$

$I_{nc.tr} = 272558.1\ in^4$

Non-composite section modulus top.....

$S_{topnc.tr} := \frac{I_{nc.tr}}{h_{nc} - yb_{nc.tr}}$

$S_{topnc.tr} = 9057.3\ in^3$

Non-composite section modulus bottom....

$S_{botnc.tr} := \frac{I_{nc.tr}}{yb_{nc.tr}}$

$S_{botnc.tr} = 11400.6\ in^3$

Modular ratio between the mild reinforcing and transformed concrete deck slab.....

$n_m := \frac{E_s}{E_{c.beam}}$

$n_m = 6.944$

Assumed area of reinforcement in deck slab per foot width of deck slab.....

$A_{deck.rebar} := 0.62 \cdot \frac{in^2}{ft}$

*(**Note**: Assuming #5 at 12" spacing, top and bottom longitudinally).*

Distance from bottom of beam to rebar....

$y_{bar} := h - \left(t_{mill} - \frac{t_{slab}}{2}\right)$

$y_{bar} = 67\,in$

Total reinforcing steel within effective width of deck slab.....

$A_{bar} := b_{eff.exterior} \cdot A_{deck.rebar}$

$A_{bar} = 5.22\,in^2$

Composite area transformed.....

$A_{tr} := A_{Exterior} + (n_p - 1) \cdot A_{ps} + (n_m - 1) \cdot A_{bar}$

$A_{tr} = 1548\,in^2$

Composite neutral axis transformed.....

$$y_{b.tr} := \frac{\left[y_b \cdot A_{Exterior} + strand_{cg} \cdot in \cdot \left[(n_p - 1) \cdot A_{ps}\right]\right] \ldots + y_{bar} \cdot \left[(n_m - 1) \cdot A_{bar}\right]}{A_{tr}}$$

$y_{b.tr} = 40\,in$

Composite inertia transformed.....

$$I_{tr} := I_{Exterior} + \left(y_{b.tr} - strand_{cg} \cdot in\right)^2 \cdot \left[(n_p - 1) \cdot A_{ps}\right] \ldots + \left(y_{b.tr} - y_{bar}\right)^2 \cdot \left[(n_m - 1) \cdot A_{bar}\right]$$

$I_{tr} = 759063.4\,in^4$

Composite section modulus top of slab.....

$S_{slab.tr} := \frac{I_{tr}}{h - y_{b.tr}}$

$S_{slab.tr} = 33009.2\,in^3$

Composite section modulus top of beam.....

$S_{top.tr} := \frac{I_{tr}}{h - \left(y_{b.tr} - t_{slab} - t_{mill} - h_{buildup}\right)}$

$S_{top.tr} = 23724\,in^3$

Composite section modulus bottom of beam.....

$S_{bot.tr} := \frac{I_{tr}}{y_{b.tr}}$

$S_{bot.tr} = 18974.5\,in^3$

B2. Prestressing Losses [LRFD 5.9.5]

For prestressing members, the total loss, Δf_{pT}, is expressed as:

$$\Delta f_{pT} = \Delta f_{pF} + \Delta f_{pA} + \Delta f_{pES} + \Delta f_{pSR} + \Delta f_{pCR} + \Delta f_{pR2}$$

where...	friction loss.....	Δf_{pF}	*(**Note**: Not considered for bonded prestressed beams)*
	anchorage set loss.....	Δf_{pA}	*(**Note**: Not considered for bonded prestressed beams)*
	elastic shortening loss.....	Δf_{pES}	
	shrinkage loss.....	Δf_{pSR}	
	creep of concrete loss....	Δf_{pCR}	
	relaxation of steel loss.....	Δf_{pR2}	

For the prestress loss calculations, gross section properties (not transformed) can be used.

Elastic Shortening

The loss due to elastic shortening in pretensioned members shall be taken as:

$$\Delta f_{pES} = \frac{E_p}{E_{ci}} \cdot f_{cgp}$$ where...

Modulus of elasticity of concrete at transfer of prestress force.....

$E_{ci.beam} = 3735.2\ ksi$

Modulus elasticity of prestressing steel.....

$E_p = 28500\ ksi$

Eccentricity of strands at midspan for non-composite section.....

$e_{cg.nc} := yb_{nc} - strand_{cg} \cdot in$

$e_{cg.nc} = 19\ in$

Section modulus at the strand c.g for the non-composite section.....

$S_{cg.nc} := \frac{I_{nc}}{e_{cg.nc}}$

$S_{cg.nc} = 13701.6\ in^3$

Stress in prestressing steel prior to transfer

$f_{ps} := 0.70 \cdot f_{pu}$

$f_{ps} = 189\ ksi$

Corresponding total prestressing force.....

$F_{ps} := A_{ps} \cdot f_{ps}$

$F_{ps} = 1156.7\ kip$

Concrete stresses at c.g. of the prestressing force at transfer and the self wt of the beam at maximum moment location.....

$f_{cgp} := \frac{F_{ps}}{A_{nc}} + \frac{F_{ps} \cdot e_{cg.nc}}{S_{cg.nc}} - \frac{M_{RelBeam}}{S_{cg.nc}}$

$f_{cgp} = 2.36\ ksi$

Losses due to elastic shortening.....

$\Delta f_{pES} := \frac{E_p}{E_{ci.beam}} \cdot f_{cgp}$

$\Delta f_{pES} = 18\ ksi$

Shrinkage

Loss in prestress due to shrinkage may be estimated as:

$$\Delta f_{pSR} = (17.0 - 0.150 \cdot H) \cdot ksi$$ where

Average annual relative humidity.....

$H = 75$

Losses due to shrinkage..... $\Delta f_{pSR} := (17.0 - 0.150 \cdot H) \cdot ksi$

$\Delta f_{pSR} = 5.8\,ksi$

Creep

Prestress loss due to creep may be taken as:

$$\Delta f_{pCR} = 12 \cdot f_{cgp} - 7 \cdot f_{cdp} \geq 0$$

Eccentricity of strands at midspan for composite section..... $e_{cg} := y_b - strand_{cg} \cdot in$

$e_{cg} = 34.6\,in$

Section modulus at the strand c.g for the composite section..... $S_{cg} := \frac{I_{Exterior}}{e_{cg}}$

$S_{cg} = 20093\,in^3$

Permanent load moments at midspan acting on non-composite section (except beam at transfer)..... $M_{nc} := M_{Slab} + M_{Forms}$

$M_{nc} = 911.8\,kip \cdot ft$

Permanent load moments at midspan acting on composite section..... $M := M_{Trb} + M_{Fws} + M_{Utility}$

$M = 340.4\,kip \cdot ft$

Concrete stresses at c.g. of the prestressing force due to permanent loads except at transfer..... $f_{cdp} := \frac{M_{nc}}{S_{cg.nc}} + \frac{M}{S_{cg}}$

$f_{cdp} = 1\,ksi$

Losses due to creep..... $\Delta f_{pCR} := \max(12 \cdot f_{cgp} - 7 \cdot f_{cdp}, 0 \cdot ksi)$

$\Delta f_{pCR} = 21.3\,ksi$

Steel Relaxation at Transfer

Prestress loss due to relaxation loss of the prestressing steel at transfer may be taken as:

$$\Delta f_{pR1} = \begin{cases} \left[\frac{\log(24.0\cdot t)}{10.0}\cdot\left(\frac{f_{pj}}{f_{py}} - 0.55\right)\cdot f_{pj}\right] & \text{if } strand_{type} = \text{"StressRelieved"} \\ \left[\frac{\log(24.0\cdot t)}{40.0}\cdot\left(\frac{f_{pj}}{f_{py}} - 0.55\right)\cdot f_{pj}\right] & \text{if } strand_{type} = \text{"LowLax"} \end{cases}$$

where,

Time estimated (in days) between stressing and transfer..... $t := 1.5$

$t = 1.5$ days

Initial stress in tendon at time of stressing (jacking force) [**LRFD Table 5.9.3.1**]..... $f_{pj} := \begin{cases} (0.70\cdot f_{pu}) & \text{if } strand_{type} = \text{"StressRelieved"} \\ (0.75\cdot f_{pu}) & \text{if } strand_{type} = \text{"LowLax"} \end{cases}$

$f_{pj} = 202.5$ ksi

*(**Note**: **LRFD C5.9.5.4.4b** allows* $f_{pj} = 0.80\cdot f_{pu}$ *for this calculation)*

Specified yield strength of the prestressing steel [**LRFD 5.4.4.1**]..... $f_{py} := \begin{cases} (0.85\cdot f_{pu}) & \text{if } strand_{type} = \text{"StressRelieved"} \\ (0.90\cdot f_{pu}) & \text{if } strand_{type} = \text{"LowLax"} \end{cases}$

$f_{py} = 243$ ksi

Losses due to steel relaxation at transfer...

$$\Delta f_{pR1} := \begin{cases} \left[\frac{\log(24.0\cdot t)}{10.0}\cdot\left(\frac{f_{pj}}{f_{py}} - 0.55\right)\cdot f_{pj}\right] & \text{if } strand_{type} = \text{"StressRelieved"} \\ \left[\frac{\log(24.0\cdot t)}{40.0}\cdot\left(\frac{f_{pj}}{f_{py}} - 0.55\right)\cdot f_{pj}\right] & \text{if } strand_{type} = \text{"LowLax"} \end{cases}$$

$\Delta f_{pR1} = 2.2$ ksi

Steel Relaxation after Transfer

Prestress loss due to relaxation loss of the prestressing steel after transfer may be taken as:

$$\Delta f_{pR2} = \begin{cases} \left[20.0 - 0.4\cdot\Delta f_{pES} - 0.2\cdot\left(\Delta f_{pSR} + \Delta f_{pCR}\right)\right] & \text{if } strand_{type} = \text{"StressRelieved"} \\ \left[20.0 - 0.4\cdot\Delta f_{pES} - 0.2\cdot\left(\Delta f_{pSR} + \Delta f_{pCR}\right)\right]\cdot(30\cdot\%) & \text{if } strand_{type} = \text{"LowLax"} \end{cases}$$

where,

Losses due to steel relaxation after transfer

$$\Delta f_{pR2} := \begin{cases} \left[20.0 \cdot ksi - 0.4 \cdot \Delta f_{pES} - 0.2 \cdot \left(\Delta f_{pSR} + \Delta f_{pCR}\right)\right] & \text{if } strand_{type} = \text{"StressRelieved"} \\ \left[20.0 \cdot ksi - 0.4 \cdot \Delta f_{pES} - 0.2 \cdot \left(\Delta f_{pSR} + \Delta f_{pCR}\right)\right] \cdot (30 \cdot \%) & \text{if } strand_{type} = \text{"LowLax"} \end{cases}$$

$\Delta f_{pR2} = 2.2\,ksi$

Total Prestress Loss

The total loss, Δf_{pT}, is expressed as..... $\Delta f_{pT} := \Delta f_{pES} + \Delta f_{pSR} + \Delta f_{pCR} + \Delta f_{pR2}$

$\Delta f_{pT} = 47.2\,ksi$

Percent loss of strand force..... $Loss := \dfrac{\Delta f_{pT}}{f_{pj}}$

$Loss = 23.3\,\%$

B3. Stress Limits (*Compression* = +, *Tension* = -)

Initial Stresses [SDG 4.3]

Limit of tension in top of beam at release (straight strand only)

Outer 15 percent of design beam..... $f_{top.outer15} = -0.76\,ksi$

Center 70 percent of design beam..... $f_{top.center70} = -0.38\,ksi$

Limit of compressive concrete strength at release..... $f_{ci.beam} = 5.2\,ksi$

For prestressing members, the total loss, Δf_{pT}, at release is expressed as:

$$\Delta f_{pTRelease} = \Delta f_{pES} + \Delta f_{pR1}$$

where... elastic shortening loss..... Δf_{pES}

relaxation of steel loss at transfer..... Δf_{pR1}

The losses at release..... $\Delta f_{pTRelease} := \Delta f_{pES} + \Delta f_{pR1}$

$\Delta f_{pTRelease} = 20.2\,ksi$

Total jacking force of strands..... $F_{pj} := f_{pj} \cdot A_{ps}$

$F_{pj} = 1239.3\,kip$

The actual stress in strand after losses at transfer have occured..... $f_{pe} := f_{pj} - \Delta f_{pTRelease}$

$f_{pe} = 182.3\,ksi$

Calculate the stress due to prestress at the top and bottom of beam at release:

Total force of strands..... $F_{pe} := f_{pe} \cdot A_{ps}$

$F_{pe} = 1115.6\,kip$

Stress at top of beam at support..... $\sigma_{pjSupport} := \left(\frac{F_{pe}}{A_{nc}} - \frac{F_{pe} \cdot e_{cg.nc}}{S_{tnc}} \right)$

$\sigma_{pjSupport} = -0.97\,ksi$

Stress at top of beam at center 70%..... $\sigma_{pjTop70} := \frac{M_{RelBeam}}{S_{tnc}} + \left(\frac{F_{pe}}{A_{nc}} - \frac{F_{pe} \cdot e_{cg.nc}}{S_{tnc}} \right)$

$\sigma_{pjTop70} = 0.13\,ksi$

Stress at bottom of beam at center 70%... $\sigma_{pjBotBeam} := \frac{-M_{RelBeam}}{S_{bnc}} + \left(\frac{F_{pe}}{A_{nc}} + \frac{F_{pe} \cdot e_{cg.nc}}{S_{bnc}} \right)$

$\sigma_{pjBotBeam} = 2.5\,ksi$

$$\sigma_{pjSupport} := \begin{cases} \text{"OK"} & \text{if } \sigma_{pjSupport} \le 0\cdot ksi \wedge \sigma_{pjSupport} \ge f_{top.outer15} \\ \text{"OK"} & \text{if } \sigma_{pjSupport} > 0\cdot ksi \wedge \sigma_{pjSupport} \le f_{ci.beam} \\ \text{"NG"} & \text{otherwise} \end{cases}$$

where $f_{top.outer15} = -0.76\,ksi$

where $f_{ci.beam} = 5.2\,ksi$

$\sigma_{pjSupport} = \text{"NG"}$ *(**Note**: Debonding will be required).*

$$Top70Release := \begin{cases} \text{"OK"} & \text{if } \sigma_{pjTop70} \le 0\cdot ksi \wedge \sigma_{pjTop70} \ge f_{top.center70} \\ \text{"OK"} & \text{if } \sigma_{pjTop70} > 0\cdot ksi \wedge \sigma_{pjTop70} \le f_{ci.beam} \\ \text{"NG"} & \text{otherwise} \end{cases}$$

where $f_{top.center70} = -0.38\,ksi$

where $f_{ci.beam} = 5.2\,ksi$

$Top70Release = \text{"OK"}$

$$BotRelease := \begin{cases} \text{"OK"} & \text{if } \sigma_{pjBotBeam} \le f_{ci.beam} \\ \text{"NG"} & \text{if } \sigma_{pjBotBeam} \le 0\cdot ksi \\ \text{"NG"} & \text{otherwise} \end{cases}$$

where $f_{ci.beam} = 5.2\,ksi$

$BotRelease = \text{"OK"}$

*(**Note**: Some MathCad equation explanations-*

- *The check for the top beam stresses checks to see if tension is present,* $\sigma_{pjTop70} \le 0\cdot ksi$*, and then applies the proper allowable. A separate line is used for the compression and tension allowables. The last line,* "NG" otherwise *, is a catch-all statement such that if the actual stress is not within the allowables, it is considered "NG".)*
- *For the bottom beam, the first line,* $\sigma_{pjBotBeam} \le f_{ci.beam}$*, checks that the allowable compression is not exceeded. The second line assures that no tension is present, if there is then the variable will be set to "NG". The catch-all statement,* "NG" otherwise *, will be ignored since the first line was satisfied. If the stress were to exceed the allowable, neither of the first two lines will be satisfied therefore the last line would produce the answer of "NG".*

Final Stresses [LRFD Table 5.9.4.2.1-1 & 5.9.4.2.2-1]

(1) Sum of effective prestress and permanent loads

Limit of compression in slab..... $f_{allow1.TopSlab} := 0.45\cdot f_{c.slab}$

$f_{allow1.TopSlab} = 2.03\,ksi$

Limit of compression in top of beam.. $f_{allow1.TopBeam} := 0.45\cdot f_{c.beam}$

$f_{allow1.TopBeam} = 2.93\,ksi$

(2) Sum of live load and 1/2 sum of effective prestress and permanent loads

Limit of compression in slab..... $f_{allow2.TopSlab} := 0.40\cdot f_{c.slab}$

$f_{allow2.TopSlab} = 1.80\,ksi$

Limit of compression in top of beam.. $f_{allow2.TopBeam} := 0.40 \cdot f_{c.beam}$

$f_{allow2.TopBeam} = 2.60\,ksi$

(3) Sum of effective prestress, permanent loads and transient loads

*(**Note**: The engineer is reminded that this check needs to be made also for stresses during shipping and handling. For purposes of this design example, this calculation is omitted).*

Limit of compression in slab..... $f_{allow3.TopSlab} := 0.60 \cdot f_{c.slab}$

$f_{allow3.TopSlab} = 2.70\,ksi$

Limit of compression in top of beam.. $f_{allow3.TopBeam} := 0.60 \cdot f_{c.beam}$

$f_{allow3.TopBeam} = 3.90\,ksi$

(4) Tension at bottom of beam only

Limit of tension in bottom of beam.....

$$f_{allow4.BotBeam} := \begin{cases} \left(-0.0948\sqrt{f_{c.beam} \cdot ksi}\right) & \text{if } Environment_{super} = \text{"Extremely"} \\ \left(-0.19\sqrt{f_{c.beam} \cdot ksi}\right) & \text{otherwise} \end{cases}$$

$f_{allow4.BotBeam} = -0.48\,ksi$ *(**Note**: For not worse than moderate corrosion conditions.)*

$Environment_{super} = \text{"Slightly"}$

B4. Service I and III Limit States

At service, check the stresses of the beam at for compression and tension. In addition, the forces in the strands after losses need to be checked.

The actual stress in strand after all losses have occured..... $f_{pe} := f_{pj} - \Delta f_{pT}$

$f_{pe} = 155.3\,ksi$

Allowable stress in strand after all losses have occured..... $f_{pe.Allow} := 0.80 \cdot f_{py}$

$f_{pe.Allow} = 194.4\,ksi$

$$LRFD_{5.9.3} := \begin{cases} \text{"OK, stress at service after losses satisfied"} & \text{if } f_{pe} \le f_{pe.Allow} \\ \text{"NG, stress at service after losses not satisfied"} & \text{otherwise} \end{cases}$$

$LRFD_{5.9.3} = \text{"OK, stress at service after losses satisfied"}$

Calculate the stress due to prestress at the top of slab, top of beam and bottom of beam:

Total force of strands..... $F_{pe} := f_{pe} \cdot A_{ps}$

$F_{pe} = 950.3\,kip$

Stress at top of beam..... $\sigma_{peTopBeam} := \frac{F_{pe}}{A_{nc.tr}} - \frac{F_{pe} \cdot e_{cg.nc}}{S_{topnc.tr}}$

$\sigma_{peTopBeam} = -0.84\,ksi$

Stress at bottom of beam..... $\sigma_{peBotBeam} := \frac{F_{pe}}{A_{nc.tr}} + \frac{F_{pe} \cdot e_{cg.nc}}{S_{botnc.tr}}$

$\sigma_{peBotBeam} = 2.74\,ksi$

Service I Limit State

The compressive stresses in the top of the beam will be checked for the following conditions:

(1) Sum of effective prestress and permanent loads

(2) Sum of live load and 1/2 sum of effective prestress and permanent loads

(3) Sum of effective prestress and permanent loads and transient loads

*(**Note**: Transient loads can include loads during shipping and handling. For purposes of this design example, these loads are omitted).*

(1) Sum of effective prestress and permanent loads. The stress due to permanent loads can be calculated as follows:

Stress in top of slab..... $\sigma 1_{TopSlab} := \frac{M_{Trb} + M_{Fws} + M_{Utility}}{S_{slab.tr}}$

$\sigma 1_{TopSlab} = 0.12\,ksi$

Stress in top of beam..... $\sigma 1_{TopBeam} := \frac{M_{Beam} + M_{Slab} + M_{Forms}}{S_{topnc.tr}} \ldots + \frac{M_{Trb} + M_{Fws} + M_{Utility}}{S_{top.tr}} \ldots + \sigma_{peTopBeam}$

$\sigma 1_{TopBeam} = 1.59\,ksi$

Check top slab stresses..... $TopSlab1 := if\left(\sigma 1_{TopSlab} \le f_{allow1.TopSlab}, "OK", "NG"\right)$

$TopSlab1 = "OK"$ where $f_{allow1.TopSlab} = 2.03\,ksi$

Check top beam stresses..... $TopBeam1 := if\left(\sigma 1_{TopBeam} \le f_{allow1.TopBeam}, "OK", "NG"\right)$

$TopBeam1 = "OK"$ where $f_{allow1.TopBeam} = 2.93\,ksi$

(2) Sum of live load and 1/2 sum of effective prestress and permanent loads

Stress in top of slab.....

$$\sigma 2_{TopSlab} := 0.5 \cdot \left(\sigma 1_{TopSlab}\right) + \frac{M_{LLI}}{S_{slab.tr}}$$

$\sigma 2_{TopSlab} = 0.80\,ksi$

Stress in top of beam.....

$$\sigma 2_{TopBeam} := 0.5 \cdot \left(\sigma 1_{TopBeam}\right) + \frac{M_{LLI}}{S_{top.tr}}$$

$\sigma 2_{TopBeam} = 1.83\,ksi$

Check top slab stresses.....

$$TopSlab2 := if\left(\sigma 2_{TopSlab} \le f_{allow2.TopSlab}, "OK", "NG"\right)$$

TopSlab2 = "OK"

where $f_{allow2.TopSlab} = 1.8\,ksi$

Check top beam stresses.....

$$TopBeam2 := if\left(\sigma 2_{TopBeam} \le f_{allow2.TopBeam}, "OK", "NG"\right)$$

TopBeam2 = "OK"

where $f_{allow2.TopBeam} = 2.6\,ksi$

(3) Sum of effective prestress, permanent loads and transient loads

Stress in top of slab.....

$$\sigma 3_{TopSlab} := \sigma 1_{TopSlab} + \frac{M_{LLI}}{S_{slab.tr}}$$

$\sigma 3_{TopSlab} = 0.86\,ksi$

Stress in top of beam.....

$$\sigma 3_{TopBeam} := \sigma 1_{TopBeam} + \frac{M_{LLI}}{S_{top.tr}}$$

$\sigma 3_{TopBeam} = 2.62\,ksi$

Check top slab stresses.....

$$TopSlab3 := if\left(\sigma 3_{TopSlab} \le f_{allow3.TopSlab}, "OK", "NG"\right)$$

TopSlab3 = "OK"

where $f_{allow3.TopSlab} = 2.7\,ksi$

Check top beam stresses.....

$$TopBeam3 := if\left(\sigma 3_{TopBeam} \le f_{allow3.TopBeam}, "OK", "NG"\right)$$

TopBeam3 = "OK"

where $f_{allow3.TopBeam} = 3.9\,ksi$

<u>Service III Limit State total stresses</u>

(4) Tension at bottom of beam only

Stress in bottom of beam.....

$$\sigma 4_{BotBeam} := \left(\frac{-M_{Beam} - M_{Slab} - M_{Forms}}{S_{botnc.tr}} \ldots + \frac{-M_{Trb} - M_{Fws} - M_{Utility}}{S_{bot.tr}}\right) \ldots + \sigma_{peBotBeam} + 0.8 \cdot \frac{-M_{LLI}}{S_{bot.tr}}$$

$\sigma 4_{BotBeam} = -0.31\,ksi$

Check bottom beam stresses..... $BotBeam4 := if(\sigma 4_{BotBeam} \geq f_{allow4.BotBeam}, "OK", "NG")$

$BotBeam4 = "OK"$ where $f_{allow4.BotBeam} = -0.48\,ksi$

B5. Strength I Limit State moment capacity [LRFD 5.7.3]

Strength I Limit State design moment.....

$M_r = 1043.8\,ft\,kip$

Factored resistance

$M_r = \phi \cdot M_n$

Nominal flexural resistance

$$M_n = A_{ps} \cdot f_{ps} \cdot \left(d_p - \frac{a}{2}\right) + A_s \cdot f_y \cdot \left(d_s - \frac{a}{2}\right) - A'_s \cdot f'_y \cdot \left(d'_s - \frac{a}{2}\right) + 0.85 \cdot f'_c \cdot (b - b_w) \cdot \beta_1 \cdot h_f \cdot \left(\frac{a}{2} - \frac{h_f}{2}\right)$$

For a rectangular, section without compression reinforcement,

$$M_n = A_{ps} \cdot f_{ps} \cdot \left(d_p - \frac{a}{2}\right) + A_s \cdot f_y \cdot \left(d_s - \frac{a}{2}\right)$$ where $a = \beta_1 \cdot c$ and

$$c = \frac{A_{ps} \cdot f_{pu} + A_s \cdot f_y}{0.85 \cdot f'_c \cdot \beta_1 \cdot b + k \cdot A_{ps} \cdot \frac{f_{pu}}{d_p}}$$

In order to determine the average stress in the prestressing steel to be used for moment capacity, a factor "k" needs to be computed.

Value for "k"..... $k := 2\left(1.04 - \frac{f_{py}}{f_{pu}}\right)$

$k = 0.28$

Stress block factor..... $\beta_1 := \max\left[0.85 - 0.05 \cdot \left(\frac{f_{c.beam} - 4000 \cdot psi}{1000 \cdot psi}\right), 0.65\right]$

$\beta_1 = 0.73$

Distance from the compression fiber to cg of prestress..... $d_p := h - strand_{cg} \cdot in$

$d_p = 57.3\,in$

Area of reinforcing mild steel..... $A_s := 0 \cdot in^2$ *(**Note**: For strength calculations, deck reinforcement is conservatively ignored.)*

$A_s = 0\,in^2$

Distance from compression fiber to reinforcing mild steel..... $d_s := 0 \cdot in$

$d_s = 0\,in$

Distance between the neutral axis and compressive face.....

$$c := \frac{A_{ps} \cdot f_{pu} + A_s \cdot f_y}{0.85 \cdot f_{c.beam} \cdot \beta_1 \cdot b_{tr.exterior} + k \cdot A_{ps} \cdot \frac{f_{pu}}{d_p}}$$

$c = 4.8\ \text{in}$

Depth of equivalent stress block.....

$$a := \beta_1 \cdot c$$

$a = 3.5\ \text{in}$

Average stress in prestressing steel.....

$$f_{ps} := f_{pu} \cdot \left(1 - k \cdot \frac{c}{d_p}\right)$$

$f_{ps} = 263.7\ \text{ksi}$

Resistance factor for tension and flexure of prestressed members **[LRFD 5.5.4.2]**.....

$\phi' = 1.00$

Moment capacity provided.....

$$M_{r.prov} := \phi' \cdot \left[A_{ps} \cdot f_{ps} \cdot \left(d_p - \frac{a}{2}\right) + A_s \cdot f_y \cdot \left(d_s - \frac{a}{2}\right)\right]$$

$M_{r.prov} = 7471.7\ \text{ft} \cdot \text{kip}$

Check moment capacity provided exceeds required.....

$$\text{Moment}_{Capacity} := \begin{pmatrix} \text{"OK"} & \text{if } M_{r.prov} \geq M_r \\ \text{"NG"} & \text{otherwise} \end{pmatrix}$$

$\text{Moment}_{Capacity} = \text{"OK"}$

where $M_r = 1043.8\ \text{ft} \cdot \text{kip}$

B6. Limits for Reinforcement [LRFD 5.7.3.3]

Maximum Reinforcement

The maximum reinforcement requirements ensure the section has sufficient ductility and is not overreinforced.

Effective depth from extreme compression fiber to centroid of the tensile reinforcement.....

$$d_e := \frac{A_{ps} \cdot f_{ps} \cdot d_p + A_s \cdot f_y \cdot d_s}{A_{ps} \cdot f_{ps} + A_s \cdot f_y}$$

$d_e = 57.3\ \text{in}$

The $\frac{c}{d_e} = 0.08$ ratio should be less than 0.42 to satisfy maximum reinforcement requirements.

$$\text{LRFD}_{5.7.3.3.1} := \begin{cases} \text{"OK, maximum reinforcement requirements for positive moment are satisfied"} & \text{if } \frac{c}{d_e} \leq 0.42 \\ \text{"NG, section is over-reinforced, see LRFD equation C5.7.3.3.1-1"} & \text{otherwise} \end{cases}$$

$\text{LRFD}_{5.7.3.3.1} = \text{"OK, maximum reinforcement requirements for positive moment are satisfied"}$

Minimum Reinforcement

The minimum reinforcement requirements ensure the moment capacity provided is at least 1.2 times greater than the cracking moment.

Modulus of Rupture..... $f_r := -0.24 \cdot \sqrt{f_{c.beam} \cdot ksi}$

$f_r = -0.6\ ksi$

Stress in bottom of beam from Service III.....

$\sigma 4_{BotBeam} = -0.31\ ksi$

Additional amount of stress causing cracking..... $\Delta\sigma := \sigma 4_{BotBeam} - f_r$

$\Delta\sigma = 0.3\ ksi$

Section modulus to bottom of beam.....

$S_b = 17070.1\ in^3$

Additional amount of moment causing cracking..... $\Delta M := \Delta\sigma \cdot S_b$

$\Delta M = 434.3\ kip \cdot ft$

Service III load case moments.....

$M_{Srv3} = 3678.6\ ft \cdot kip$

Moment due to prestressing provided..... $M_{ps} := -(F_{pe} \cdot e_{cg.nc})$

$M_{ps} = -1506.9\ ft \cdot kip$

Cracking moment..... $M_{cr} := (M_{Srv3} + M_{ps}) + \Delta M$

$M_{cr} = 2606\ ft \cdot kip$

Required flexural resistance..... $M_{r.reqd} := \min(1.2 \cdot M_{cr}, 133 \cdot \% \cdot M_r)$

$M_{r.reqd} = 1388.3\ ft \cdot kip$

Check that the capacity provided, $M_{r.prov} = 7471.7\ ft \cdot kip$, exceeds minimum requirements, $M_{r.reqd} = 1388.3\ ft \cdot kip$

.

$$LRFD_{5.7.3.3.2} := \begin{cases} \text{"OK, minimum reinforcement for positive moment is satisfied"} & \text{if } M_{r.prov} \geq M_{r.reqd} \\ \text{"NG, reinforcement for positive moment is less than minimum"} & \text{otherwise} \end{cases}$$

$LRFD_{5.7.3.3.2}$ = "OK, minimum reinforcement for positive moment is satisfied"

C. Interior Beam Debonding Requirements

C1. Strand Pattern definition at Support

Define the number of strands and eccentricity of strands from bottom of beam at $Support = 0\,ft$

SUPPORT Strand Pattern Data

Rows of strand from bottom of beam	Input (inches)	Number of strands per row	MIDSPAN	Number of strands per row	SUPPORT	COMMENTS
y9 =	19	n9 =	0	n9 =	0	
y8 =	17	n8 =	0	n8 =	0	
y7 =	15	n7 =	0	n7 =	0	
y6 =	13	n6 =	0	n6 =	0	
y5 =	11	n5 =	0	n5 =	0	
y4 =	9	n4 =	7	n4 =	7	
y3 =	7	n3 =	11	n3 =	11	
y2 =	5	n2 =	11	n2 =	9	
y1 =	3	n1 =	11	n1 =	9	
Strand c.g. =	5.89		40	Total strands =	36	

Area of prestressing steel..... $A_{ps.Support} := (strands_{total} \cdot StrandArea)$

$A_{ps.Support} = 5.5\,in^2$

C2. Stresses at support at release

The losses at release.....

$\Delta f_{pTRelease} = 20.2\,ksi$

Total jacking force of strands..... $F_{pj} := f_{pj} \cdot A_{ps.Support}$

$F_{pj} = 1115.4\,kip$

The actual stress in strand after losses at transfer have occured..... $f_{pe} := f_{pj} - \Delta f_{pTRelease}$

$f_{pe} = 182.3\,ksi$

Calculate the stress due to prestress at the top and bottom of beam at release:

Total force of strands..... $F_{pe} := f_{pe} \cdot A_{ps.Support}$

$F_{pe} = 1004\,kip$

Stress at top of beam at support..... $\sigma_{pjTopEnd} := \left(\frac{F_{pe}}{A_{nc}} - \frac{F_{pe} \cdot e_{cg.nc}}{S_{tnc}}\right)$

$\sigma_{pjTopEnd} = -0.87\,ksi$

Stress at bottom of beam at support...

$$\sigma_{pjBotEnd} := \left(\frac{F_{pe}}{A_{nc}} + \frac{F_{pe} \cdot e_{cg.nc}}{S_{bnc}}\right)$$

$\sigma_{pjBotEnd} = 3.08\,ksi$

$$TopRelease := \begin{cases} \text{"OK"} & \text{if } \sigma_{pjTopEnd} \le 0 \cdot ksi \wedge \sigma_{pjTopEnd} \ge f_{top.outer15} \\ \text{"OK"} & \text{if } \sigma_{pjTopEnd} > 0 \cdot ksi \wedge \sigma_{pjTopEnd} \le f_{ci.beam} \\ \text{"NG"} & \text{otherwise} \end{cases}$$

where $f_{top.outer15} = -0.76\,ksi$

where $f_{ci.beam} = 5.2\,ksi$

TopRelease = "NG"

*(**Note**: See **Sect D3** - By inspection, if the factor to account for the strand force varying up to the transfer length of the strands is applied, the stresses at the top will be within the allowable limit.)*

$$BotRelease := \begin{cases} \text{"OK"} & \text{if } \sigma_{pjBotEnd} \le f_{ci.beam} \\ \text{"NG"} & \text{if } \sigma_{pjBotEnd} \le 0 \cdot ksi \\ \text{"NG"} & \text{otherwise} \end{cases}$$

where $f_{ci.beam} = 5.2\,ksi$

BotRelease = "OK"

C3. Strand Pattern definition at Debond1

Define the number of strands and eccentricity of strands from bottom of beam at $Debond1 = 8\,ft$

DEBOND1 Strand Pattern Data

Rows of strand from bottom of beam	Input (inches)	Number of strands per row	MIDSPAN	SUPPORT	Number of strands per row	DEBOND1	COMMENTS
y9 =	19	n9 =	0	0	n9 =	0	
y8 =	17	n8 =	0	0	n8 =	0	
y7 =	15	n7 =	0	0	n7 =	0	
y6 =	13	n6 =	0	0	n6 =	0	
y5 =	11	n5 =	0	0	n5 =	0	
y4 =	9	n4 =	7	7	n4 =	7	
y3 =	7	n3 =	11	11	n3 =	11	
y2 =	5	n2 =	11	9	n2 =	11	
y1 =	3	n1 =	11	9	n1 =	9	
Strand c.g. =	5.84		40	36	Total strands =	38	

Area of prestressing steel.....

$$A_{ps.Debond1} := \left(strands_{total} \cdot StrandArea\right)$$

$A_{ps.Debond1} = 5.8\,in^2$

C4. Stresses at Debond1 at Release

The losses at release.....

$\Delta f_{pTRelease} = 20.2\,ksi$

Total jacking force of strands..... $F_{pj} := f_{pj} \cdot A_{ps.Debond1}$

$F_{pj} = 1177.3\,kip$

The actual stress in strand after losses at transfer have occured..... $f_{pe} := f_{pj} - \Delta f_{pTRelease}$

$f_{pe} = 182.3\,ksi$

Calculate the stress due to prestress at the top and bottom of beam at release:

Total force of strands..... $F_{pe} := f_{pe} \cdot A_{ps.Debond1}$

$F_{pe} = 1059.8\,kip$

Stress at top of beam at outer 15%..... $\sigma_{pjTop15} := \frac{M_{RelBeamD1}}{S_{tnc}} + \left(\frac{F_{pe}}{A_{nc}} - \frac{F_{pe} \cdot e_{cg.nc}}{S_{tnc}}\right)$

$\sigma_{pjTop15} = -0.56\,ksi$

Stress at bottom of beam at outer 15%... $\sigma_{pjBotBeam} := \frac{-M_{RelBeamD1}}{S_{bnc}} + \left(\frac{F_{pe}}{A_{nc}} + \frac{F_{pe} \cdot e_{cg.nc}}{S_{bnc}}\right)$

$\sigma_{pjBotBeam} = 2.95\,ksi$

$$\sigma_{pjTop15} := \begin{cases} \text{"OK"} & \text{if } \sigma_{pjTop15} \le 0 \cdot ksi \wedge \sigma_{pjTop15} \ge f_{top.outer15} \\ \text{"OK"} & \text{if } \sigma_{pjTop15} > 0 \cdot ksi \wedge \sigma_{pjTop15} \le f_{ci.beam} \\ \text{"NG"} & \text{otherwise} \end{cases}$$

where $f_{top.outer15} = -0.76\,ksi$

where $f_{ci.beam} = 5.2\,ksi$

$\sigma_{pjTop15} = \text{"OK"}$

$$BotRelease := \begin{cases} \text{"OK"} & \text{if } \sigma_{pjBotBeam} \le f_{ci.beam} \\ \text{"NG"} & \text{if } \sigma_{pjBotBeam} \le 0 \cdot ksi \\ \text{"NG"} & \text{otherwise} \end{cases}$$

where $f_{ci.beam} = 5.2\,ksi$

$BotRelease = \text{"OK"}$

C5. Strand Pattern definition at Debond2

Define the number of strands and eccentricity of strands from bottom of beam at $Debond2 = 16\,ft$

DEBOND2 Strand Pattern Data

Rows of strand from bottom of beam	Input (inches)	Number of strands per	MIDSPAN	SUPPORT	DEBOND1	Number of strands per row	DEBOND2	COMMENTS
y9 =	19	n9 =	0	0	0	n9 =	0	
y8 =	17	n8 =	0	0	0	n8 =	0	
y7 =	15	n7 =	0	0	0	n7 =	0	
y6 =	13	n6 =	0	0	0	n6 =	0	
y5 =	11	n5 =	0	0	0	n5 =	0	
y4 =	9	n4 =	7	7	7	n4 =	7	
y3 =	7	n3 =	11	11	11	n3 =	11	
y2 =	5	n2 =	11	9	11	n2 =	11	
y1 =	3	n1 =	11	9	9	n1 =	11	
Strand c.g. =	5.70		40	36	38	Total strands =	40	All strands are active beyond this point

Area of prestressing steel.....

$A_{ps.Debond2} := (strands_{total} \cdot StrandArea)$

$A_{ps.Debond2} = 6.1\,in^2$

C6. Stresses at Debond2 at Release

The losses at release.....

$\Delta f_{pTRelease} = 20.2\,ksi$

Total jacking force of strands.....

$F_{pj} := f_{pj} \cdot A_{ps.Debond2}$

$F_{pj} = 1239.3\,kip$

The actual stress in strand after losses at transfer have occured.....

$f_{pe} := f_{pj} - \Delta f_{pTRelease}$

$f_{pe} = 182.3\,ksi$

Calculate the stress due to prestress at the top and bottom of beam at release:

Total force of strands.....

$F_{pe} := f_{pe} \cdot A_{ps.Debond2}$

$F_{pe} = 1115.6\,kip$

Stress at top of beam at outer 15%.....

$$\sigma_{pjTop15} := \frac{M_{RelBeamD2}}{S_{tnc}} + \left(\frac{F_{pe}}{A_{nc}} - \frac{F_{pe} \cdot e_{cg.nc}}{S_{tnc}}\right)$$

$\sigma_{pjTop15} = -0.32\,ksi$

Stress at bottom of beam at outer 15%...

$$\sigma_{pjBotBeam} := \frac{-M_{RelBeamD2}}{S_{bnc}} + \left(\frac{F_{pe}}{A_{nc}} + \frac{F_{pe} \cdot e_{cg.nc}}{S_{bnc}}\right)$$

$$\sigma_{pjBotBeam} = 2.88\,ksi$$

$$\sigma_{pjTop15} := \begin{cases} \text{"OK"} & \text{if } \sigma_{pjTop15} \le 0 \cdot ksi \wedge \sigma_{pjTop15} \ge f_{top.outer15} \\ \text{"OK"} & \text{if } \sigma_{pjTop15} > 0 \cdot ksi \wedge \sigma_{pjTop15} \le f_{ci.beam} \\ \text{"NG"} & \text{otherwise} \end{cases}$$

where $f_{top.outer15} = -0.76\,ksi$

where $f_{ci.beam} = 5.2\,ksi$

$$\sigma_{pjTop15} = \text{"OK"}$$

$$BotRelease := \begin{cases} \text{"OK"} & \text{if } \sigma_{pjBotBeam} \le f_{ci.beam} \\ \text{"NG"} & \text{if } \sigma_{pjBotBeam} \le 0 \cdot ksi \\ \text{"NG"} & \text{otherwise} \end{cases}$$

where $f_{ci.beam} = 5.2\,ksi$

$$BotRelease = \text{"OK"}$$

D. Shear Design

D1. Determine Nominal Shear Resistance

The nominal shear resistance, Vn, shall be determined as the lesser of:

$$V_n = V_c + V_s + V_p$$

$$V_n = 0.25 \cdot f'_c \cdot b_v \cdot d_v$$

The shear resistance of a concrete member may be separated into a component, V_c, that relies on tensile stresses in the concrete, a component, V_s, that relies on tensile stresses in the transverse reinforcement, and a component, V_p, that is the vertical component of the prestressing force.

Nominal shear resistance of concrete section..... $V_c = 0.0316 \cdot \beta \cdot \sqrt{f'_c} \cdot b_v \cdot d_v$

Nominal shear resistance of shear reinforcement section..... $V_s = \dfrac{A_v \cdot f_y \cdot d_v \cdot \cot(\theta)}{s}$

Nominal shear resistance from prestressing for straight strands (non-draped)..... $V_p := 0 \cdot kip$

Effective shear depth..... $d_v := \max\left(d_s - \dfrac{a}{2}, 0.9 \cdot d_s, 0.72 \cdot h\right)$

$d_v = 45.4\,in$ or $d_v = 3.8\,ft$

*(**Note**: This location is the same location as previously estimated for* $ShearChk = 3.8\,ft$ *.)*

D2. b and q Parameters [LRFD 5.8.3.4.2]

Tables are give in LRFD to determine β from the longitudinal strain and $\dfrac{v}{f'_c}$ parameter, so these values need to be calculated.

Longitudinal strain for sections with prestressing and transverse reinforcement. $\varepsilon_x = \dfrac{\dfrac{M_u}{d_v} + 0.5 \cdot V_u \cdot \cot(\theta) - A_{ps} \cdot f_{po}}{2 \cdot (E_s \cdot A_s + E_p \cdot A_{ps})}$

Effective width..... $b_v := b_w$ where $b_v = 8\,in$

Effective shear depth..... $d_v = 3.8\,ft$

Factor indicating ability of diagonally cracked concrete to transmit tension.. β

*(**Note**: Values of $\beta = 2$ and $\theta = 45 \cdot deg$ cannot be assumed since beam is prestressed.)*

Angle of inclination for diagonal compressive stresses..... θ

LRFD Table 5.8.3.4.2-1 presents values of θ and β for sections with transverse reinforcement . LRFD C5.8.3.4.2 states that data given by the table may be used over a range of values. Linear interpolation may be used, but is not recommended for hand calculations.

$\frac{v}{f'_c}$	ε_x x 1,000										
	≤-0.20	≤-0.10	≤-0.05	≤0	≤0.125	≤0.25	≤0.50	≤0.75	≤1.00	≤1.50	≤2.00
≤0.075	22.3 6.32	20.4 4.75	21.0 4.10	21.8 3.75	24.3 3.24	26.6 2.94	30.5 2.59	33.7 2.38	36.4 2.23	40.8 1.95	43.9 1.67
≤0.100	18.1 3.79	20.4 3.38	21.4 3.24	22.5 3.14	24.9 2.91	27.1 2.75	30.8 2.50	34.0 2.32	36.7 2.18	40.8 1.93	43.1 1.69
≤0.125	19.9 3.18	21.9 2.99	22.8 2.94	23.7 2.87	25.9 2.74	27.9 2.62	31.4 2.42	34.4 2.26	37.0 2.13	41.0 1.90	43.2 1.67
≤0.150	21.6 2.88	23.3 2.79	24.2 2.78	25.0 2.72	26.9 2.60	28.8 2.52	32.1 2.36	34.9 2.21	37.3 2.08	40.5 1.82	42.8 1.61
≤0.175	23.2 2.73	24.7 2.66	25.5 2.65	26.2 2.60	28.0 2.52	29.7 2.44	32.7 2.28	35.2 2.14	36.8 1.96	39.7 1.71	42.2 1.54
≤0.200	24.7 2.63	26.1 2.59	26.7 2.52	27.4 2.51	29.0 2.43	30.6 2.37	32.8 2.14	34.5 1.94	36.1 1.79	39.2 1.61	41.7 1.47
≤0.225	26.1 2.53	27.3 2.45	27.9 2.42	28.5 2.40	30.0 2.34	30.8 2.14	32.3 1.86	34.0 1.73	35.7 1.64	38.8 1.51	41.4 1.39
≤0.250	27.5 2.39	28.6 2.39	29.1 2.33	29.7 2.33	30.6 2.12	31.3 1.93	32.8 1.70	34.3 1.58	35.8 1.50	38.6 1.38	41.2 1.29

The longitudinal strain and $\frac{v}{f'_c}$ parameter are calculated for the appropriate critical sections.

The shear stress on the concrete shall be determined as [LRFD equation 5.8.2.9-1]:

$$v = \frac{V_u - \phi \cdot V_p}{\phi \cdot b_v \cdot d_v}$$

Factored shear force at the critical section

$V_u = 291\,kip$

Shear stress on the section..... $v := \frac{V_u - \phi_v \cdot V_p}{\phi_v \cdot b_v \cdot d_v}$

$v = 0.89\,ksi$

Parameter for locked in difference in strain between prestressing tendon and concrete. $f_{po} := 0.7 \cdot f_{pu}$

$f_{po} = 189\,ksi$

The prestressing strand force becomes effective with the transfer length..... $L_{transfer} := 60 \cdot strand_{dia}$

$L_{transfer} = 2.5\ ft$

Since the transfer length, $L_{transfer} = 2.5\ ft$, is less than the shear check location, $ShearChk = 3.8\ ft$, from the end of the beam, the full force of the strands are effective.

Factored moment on section..... $M_u := \max(M_r, V_u \cdot d_v)$

$M_u = 1100\ ft \cdot kip$

For the longitudinal strain calculations, an initial assumption for θ must be made.....

$\theta := 23.3 \cdot deg$

Longitudinal strain..... $$\varepsilon_x := \frac{\frac{M_u}{d_v} + 0.5 \cdot V_u \cdot \cot(\theta) - A_{ps.Support} \cdot f_{po}}{2 \cdot (E_s \cdot A_s + E_p \cdot A_{ps.Support})} \cdot (1000)$$

$\varepsilon_x = -1.31$

Since the strain value is negative, the strain needs to be recalculated as per **LRFD equation 5.8.3.4.2-3**:

whereas $$e_x = \frac{\frac{M_u}{d_v} + 0.5 \cdot V_u \cdot \cot(\theta) - A_{ps} \cdot f_{po}}{2 \cdot (E_c \cdot A_c + E_s \cdot A_s + E_p \cdot A_{ps})}$$

Area of the concrete on the tension side of the member..... $A_c := \frac{A_{nc}}{h_{nc}} \cdot \frac{h}{2}$

*(**Note**: The non-composite area of the beam is divided by its height, then multiplied by one-half of the composite section height).*

$A_c = 460.2\ in^2$

Recalculating the strain,

Longitudinal strain..... $$\varepsilon_x := \frac{\frac{M_u}{d_v} + 0.5 \cdot V_u \cdot \cot(\theta) - A_{ps.Support} \cdot f_{po}}{2 \cdot (E_{c.beam} \cdot A_c + E_s \cdot A_s + E_p \cdot A_{ps.Support})} \cdot (1000)$$

$\varepsilon_x = -0.10$

$\frac{v}{f'_c}$ parameter..... $\frac{v}{f_{c.beam}} = 0.137$

Based on **LRFD Table 5.8.3.4.2-1**, the values of θ and β can be approximately taken as:

Angle of inclination of compression stresses

$\theta = 23.3\,\text{deg}$

Factor relating to longitudinal strain on the shear capacity of concrete

$\beta := 2.79$

Nominal shear resistance of concrete section..... $V_c := 0.0316 \cdot \beta \cdot \sqrt{f_{c.beam} \cdot ksi} \cdot b_v \cdot d_v$

$V_c = 81.6\,\text{kip}$

Stirrups

Size of stirrup bar ("4" "5" "6")... bar := "5"

Area of shear reinforcement..... $A_v = 0.620\,\text{in}^2$

Diameter of shear reinforcement..... $dia = 0.625\,\text{in}$

Nominal shear strength provided by shear reinforcement

$V_n = V_c + V_p + V_s$

where..... $V_n := \min\left(\frac{V_u}{\phi_v}, 0.25 \cdot f_{c.beam} \cdot b_v \cdot d_v + V_p\right)$

$V_n = 323.3\,\text{kip}$

and..... $V_s := V_n - V_c - V_p$

$V_s = 241.8\,\text{kip}$

Spacing of stirrups

Minimum transverse reinforcement..... $s_{min} := \frac{A_v \cdot f_y}{0.0316 \cdot b_v \cdot \sqrt{f_{c.beam} \cdot ksi}}$

$s_{min} = 57.7\,\text{in}$

Transverse reinforcement required..... $s_{req} := \text{if}\left(V_s \le 0, s_{min}, \frac{A_v \cdot f_y \cdot d_v \cdot \cot(\theta)}{V_s}\right)$

$s_{req} = 16.2\,\text{in}$

Minimum transverse reinforcement required..... $s := \min(s_{min}, s_{req})$

$s = 16.2\,\text{in}$

Maximum transverse reinforcement

$$s_{max} := \text{if}\left[\frac{V_u - \phi_v \cdot V_p}{\phi_v \cdot (b_v \cdot d_v)} < 0.125 \cdot f_{c.beam}, \min(0.8 \cdot d_v, 24 \cdot in), \min(0.4 \cdot d_v, 12 \cdot in)\right]$$

$$s_{max} = 12\,in$$

Spacing of transverse reinforcement cannot exceed the following spacing.....

$$spacing := \text{if}(s_{max} > s, s, s_{max})$$

$$spacing = 12.0\,in$$

D3. Longitudinal Reinforcement

For sections not subjected to torsion, longitudinal reinforcement shall be proportioned so that at each section the tensile capacity of the reinforcement on the flexural tension side of the member, taking into account any lack of full development of that reinforcement.

General equation for force in longitudinal reinforcement

$$T = \frac{M_u}{d_v \cdot \phi_b} + \left(\frac{V_u}{\phi_v} - 0.5 \cdot V_s - V_p\right) \cdot \cot(\theta)$$

where.....

$$V_s := \min\left(\frac{A_v \cdot f_y \cdot d_v \cdot \cot(\theta)}{spacing}, \frac{V_u}{\phi_v}\right)$$

$$V_s = 323.3\,kip$$

and.....

$$T := \frac{M_u}{d_v \cdot \phi} + \left(\frac{V_u}{\phi_v} - 0.5 \cdot V_s - V_p\right) \cdot \cot(\theta)$$

$$T = 698.7\,kip$$

<u>At the shear check location</u>

Longitudinal reinforcement, previously computed for positive moment design.....

$$A_{ps.Support} = 5.5\,in^2$$

Equivalent force provided by this steel.....

$$T_{psShearChk} := A_{ps.Support} \cdot f_{pe}$$

$$T_{psShearChk} = 1004\,kip$$

$$LRFD_{5.8.3.5} := \begin{cases} \text{"Ok, positive moment longitudinal reinforcement is adequate"} & \text{if } T_{psShearChk} \geq T \\ \text{"NG, positive moment longitudinal reinforcement provided"} & \text{otherwise} \end{cases}$$

$$LRFD_{5.8.3.5} = \text{"Ok, positive moment longitudinal reinforcement is adequate"}$$

<u>At the support location</u>

General equation for force in longitudinal reinforcement

$$T = \frac{M_u}{d_v \cdot \phi_b} + \left(\frac{V_u}{\phi_v} - 0.5 \cdot V_s - V_p\right) \cdot \cot(\theta) \qquad \text{where } M_u = 0 \cdot ft \cdot kip$$

where..... $V_s := \min\left(\frac{A_v \cdot f_y \cdot d_v \cdot \cot(\theta)}{spacing}, \frac{V_{u.Support}}{\phi_v}\right)$

$V_s = 326.5\,kip$

and..... $T := \left(\frac{V_{u.Support}}{\phi_v} - 0.5 \cdot V_s - V_p\right) \cdot \cot(\theta)$

$T = 431.3\,kip$

In determining the tensile force that the reinforcement is expected to resist at the inside edge of the bearing area, the values calculated at $d_v = 3.8\,ft$ from the face of the support **may** be used. Note that the force is greater due to the contribution of the moment at d_v. For this example, the actual values at the face of the support will be used.

Longitudinal reinforcement, previously computed for positive moment design.....

$A_{ps.Support} = 5.5\,in^2$

The prestressing strand force is not all effective at the support area due to the transfer length required to go from zero force to maximum force. A factor will be applied that takes this into account.

Transfer length..... $L_{transfer} = 30\,in$

Distance from center line of bearing to end of beam..... $J = 6\,in$

Estimated length of bearing pad..... $L_{pad} := 12 \cdot in$

*(**Note !** - this dimension needs to be increased since the edge of pad should be about 1-1/2" from the edge of the beam. Override and use the following: $J := 8.5 \cdot in$)*

Determine the force effective at the inside edge of the bearing area.

Factor to account for effective force..... $Factor := \frac{J + \frac{L_{pad}}{2}}{L_{transfer}}$

$Factor = 0.5$

Equivalent force provided by this steel..... $T_{psSupport} := A_{ps.Support} \cdot f_{pe} \cdot Factor$

$T_{psSupport} = 485.3\,kip$

$$LRFD_{5.8.3.5} := \begin{cases} \text{"Ok, positive moment longitudinal reinforcement is adequate"} & \text{if } T_{psSupport} \geq T \\ \text{"NG, positive moment longitudinal reinforcement provided"} & \text{otherwise} \end{cases}$$

$LRFD_{5.8.3.5} =$ "Ok, positive moment longitudinal reinforcement is adequate"

*(**Note**: The location of the bearing pad had to be moved in order to satisfy this criteria. It will now provide 2-1/2" from the edge of the pad to the end of the beam. The engineer needs to assure that this is properly detailed and adhered to in the plans).*

Several important design checks were not performed in this design example (to reduce the length of calculations). However, the engineer should assure that the following has been done at a minimum:

- Design for interface steel
- Design for anchorage steel
- Design for camber
- Design check for beam transportation loads
- Design for fatigue checks when applicable

E. Summary

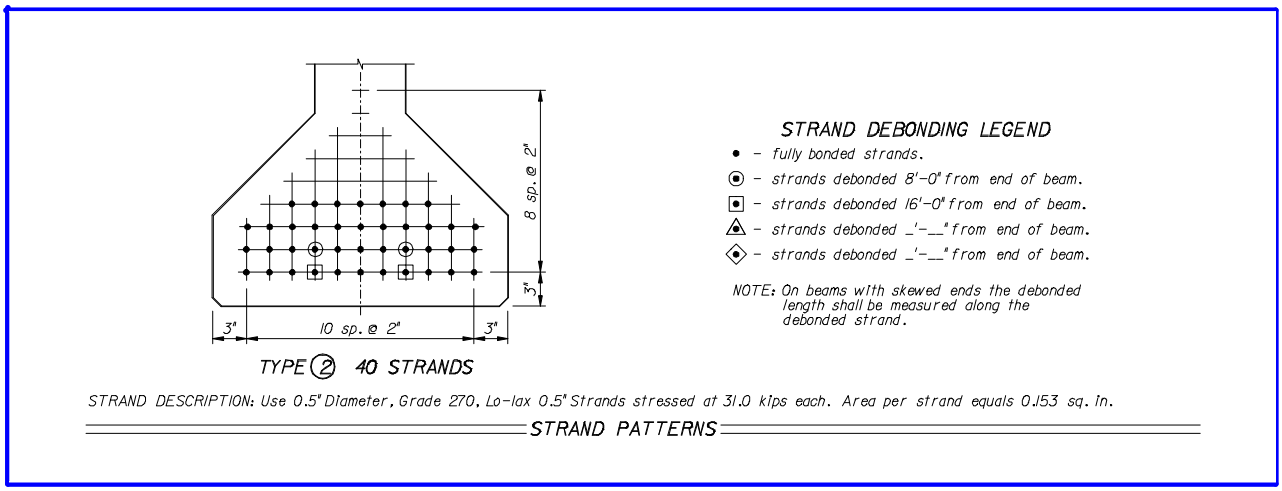

Defined Units

Empirical Deck Design

References

Reference:F:\HDRDesignExamples\Ex1_PCBeam\203LLs.mcd(R)

Description

This section provides the criteria for the empirical deck design. This section does not include the overhang design.

Page Contents

117 **A. Design Parameters**

- **A1. Concrete Deck Slabs - Empirical Design [SDG 4.2.4 A]**
- **A2. Deck Slab Design [SDG 4.2.4]**
- **A3. Skewed Decks**
- **A4. Proposed Reinforcing Details**

119 **B. Empirical Deck Design Conditions [LRFD 9.7.2]**

- **B1. Conditions**
- **B2. Summary**

A. Design Parameters

A1. Concrete Deck Slabs - Empirical Design [SDG 4.2.4 A]

Reinforcement Requirements **[SDG 4.2.4]** supercede **[LRFD 9.7.2.5]**

A2. Deck Slab Design [SDG 4.2.4]

Top and bottom reinforcement for deck slab

"Use #5 bars @ 12 inch spacing in both directions"

Additional top reinforcement for overhang

"Use 2-#5 bars @ 4 inch spacing"

A3. Skewed Decks

The skew influences the amount of reinforcement

Skew = **–30** deg

Transverse steel

"Perpendicular to CL of span "

Top reinforcement for deck slab along skew

"Use 3 #5 bars @ 6 inch spacing"

Top and bottom longitudinal reinforcement for deck slab at skew

"Use #5 bars @ 6 inch spacing, BeamSpacing distance"

A4. Proposed Reinforcing Details

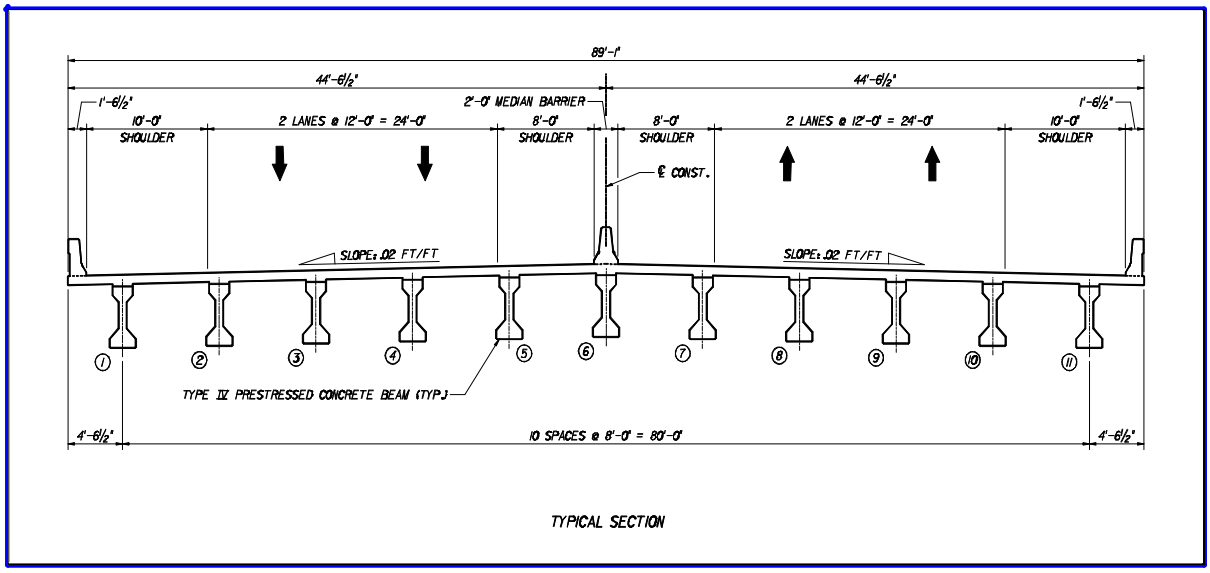

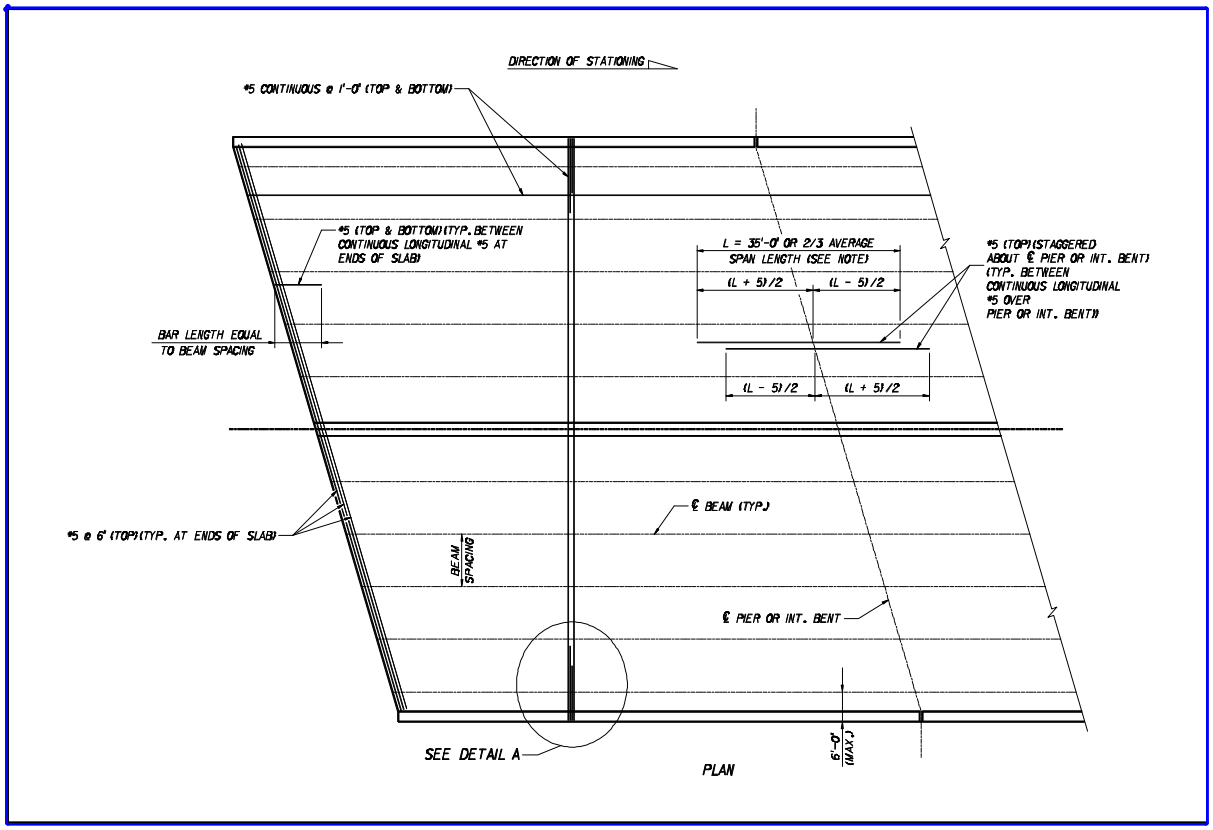

NOTE:

SPANS WITH AN AVERAGE LENGTH OF 52'-6" OR MORE USE 35'-0". SPANS WITH AN AVERAGE LENGTH OF LESS THAN 52'-6", USE 2/3 AVERAGE SPAN LENGTH.

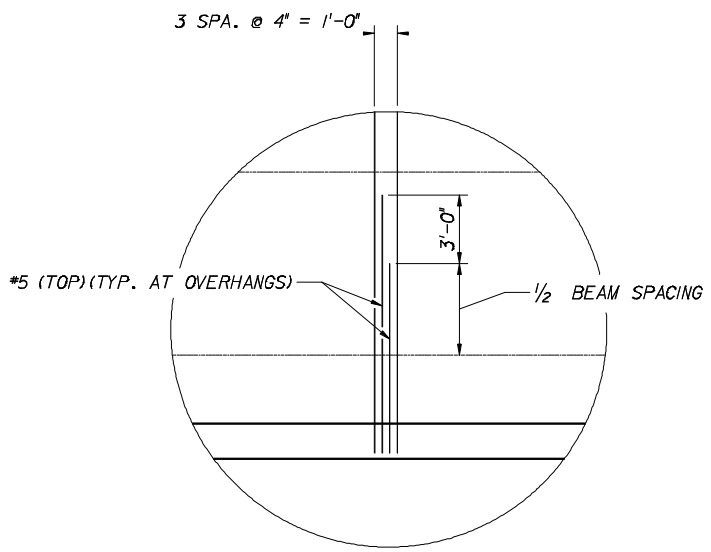

DETAIL A
OVERHANG REINFORCEMENT

B. Empirical Deck Design Conditions [LRFD 9.7.2]

B1. Conditions

The empirical deck design may be used if the following conditions are satisfied. The conditions are **"TRUE"**, **"FALSE"**, or **"NA"**.

Cross-frames or diaphragms are used at the supports..... $Condition_0 := \text{"TRUE"}$

This condition applies to cross-sections with torsionally stiff units, such as individual, separated box beams, therefore not applicable for prestressed beams..... $Condition_1 := \text{"NA"}$

The supporting components are made of steel and/or concrete..... $Condition_2 := \text{"TRUE"}$

The deck is fully cast-in-place and water cured..... $Condition_3 := \text{"TRUE"}$

The deck has a uniform depth, except for haunches at beam flanges and other local thickening..... $Condition_4 := \text{"TRUE"}$

The ratio of effective length to design depth is between 6.0 and 18.0..... $Condition_5 = \text{"TRUE"}$

$$Ratio := \frac{(Slab_{eff.Length})}{t_{slab}}$$

$Ratio = 10.25$

*(**Note**: #5 Internally answered)*

Core depth of the slab is not less than 4.0 in.... $Condition_6 = \text{"TRUE"}$

$t_{core} = 4.0\ in$

*(**Note**: #6 Internally answered)*

The effective slab length does not exceed 13.5 ft..... $Condition_7 = \text{"TRUE"}$

$Slab_{eff.Length} = 6.833\ ft$

*(**Note**: #7 Internally answered)*

The minimum slab depth is not less than 7.0 in, excluding a sacrificial wearing surface..... $Condition_8 = \text{"TRUE"}$

$t_{slab} = 8\ in$

*(**Note**: #8 Internally answered)*

The slab overhang beyond the centerline of the outside girder is at least 5.0 times the slab depth. This condition is also satisfied if the overhang is at least 3.0 times the slab depth and a structurally continuous concrete barrier is made composite with the overhang.....

$Condition_9$ = **"TRUE"**

*(**Note**: #9 Internally answered)*

The specified 28-day compressive strength of the deck concrete is not less than 4.0 ksi.....

$Condition_{10}$ = **"TRUE"**

$f_{c.slab}$ = **4.5** ksi

*(**Note**: #10 Internally answered)*

The deck is made composite with the supporting structural components. For concrete beams, stirrups extending into the deck is sufficient to satisfy this requirement....

$Condition_{11}$:= **"TRUE"**

B2. Summary

If all the above conditions are satisfied, then the reinforcing in Section A2 is applicable. If all the conditions are not satisfied, then the deck slab shall be designed by the traditional deck design. For deck overhangs, the empirical deck design is not applicable, so the traditional deck design is used for all deck overhang designs.

$Empirical_{DesignSummary}$ =

"Yes, crossframes or diaphragms are used at supports"
"Yes, for box girders, intermediate diaphragms or supplemental reinforcement are provided"
"Yes, steel girders or concrete beams are used"
"Yes, deck is CIP and/or water cured"
"Yes, deck has uniform depth, except for haunches"
"Yes, effective length to depth criteria is satisfied"
"Yes, core depth of slab is not less than 4 in"
"Yes, effective slab length does not exceed 13.5 ft"
"Yes, minimum slab depth is not less than 7 ft"
"Yes, overhang is at least 5 times the depth of slab"
"Yes, 28-day compressive strength of concrete is not less than 4 ksi"
"Yes, deck is composite with supporting structural members"

Defined Units

Traditional Deck Design

References

Reference:F:\HDRDesignExamples\Ex1_PCBeam\206DeckEmp.mcd(R)

Description

This section provides the criteria for the traditional deck design.

Page Contents

122 **LRFD Criteria**

122 **FDOT Criteria**

123 **A. Input Variables**

124 **B. Approximate Methods of Analysis - Decks [LRFD 4.6.2]**

- **B1. Width of Equivalent Interior Strips**
- **B2. HL-93 Live Load**
- **B3. Dead Load Design Moments**
- **B4. Design Moment Summary and Limit State Combinations:**

130 **C. Moment Design**

- **C1. Positive Moment Region Design - Flexural Resistance [LRFD 5.7.3.2]**
- **C2. Negative Moment Region Design - Flexural Resistance [LRFD 5.7.3.2]**
- **C3. Limits for Reinforcement [LRFD 5.7.3.3]**
- **C4. Crack Control by Distribution Reinforcement [LRFD 5.7.3.4]**
- **C5. Shrinkage and Temperature Reinforcement [LRFD 5.10.8.2]**
- **C6. Distribution of Reinforcement [LRFD 9.7.3.2]**
- **C7. Summary of Reinforcement Provided and Comparison with Empirical Design**

LRFD Criteria

Live Loads - Application of Design Vehicular Live Loads - Deck Overhang Load [LRFD 3.6.1.3.4]

This section is not applicable for Florida designs, since the barriers are not designed as structurally continuous and composite with the deck slab.

Static Analysis - Approximate Methods of Analysis - Decks [LRFD 4.6.2.1]

Deck Slab Design Table [LRFD Appendix A4]

Table A4.1-1 in Appendix 4 may be used to determine the design live load moments.

STRENGTH I - Basic load combination relating to the normal vehicular use of the bridge without wind.

$WA, FR = 0$ For superstructure design, water load / stream pressure and friction forces are not applicable.

$TU, CR, SH, FR = 0$ Uniform temperature, creep, shrinkage are generally ignored.

$Strength1 = 1.25 \cdot DC + 1.50 \cdot DW + 1.75 \cdot LL$

SERVICE I - Load combination relating to the normal operational use of the bridge with a 55 MPH wind and all loads taken at their nominal values.

$BR, WS, WL = 0$ For superstructure design, braking forces, wind on structure and wind on live load are not applicable.

$Service1 = 1.0 \cdot DC + 1.0 \cdot DW + 1.0 \cdot LL$

FATIGUE - Fatigue load combination relating to repetitive gravitational vehicular live load under a single design truck.

"Not applicable for deck slabs on multi-beam bridges"

FDOT Criteria

Skewed Decks [SDG 4.2.11]

Transverse steel..... "Perpendicular to CL of span "

Top reinforcement for deck slab along skew..... "Use 3 #5 bars @ 6 inch spacing"

Top and bottom longitudinal reinforcement for deck slab at skew..... "Use #5 bars @ 6 inch spacing, BeamSpacing distance"

A. Input Variables

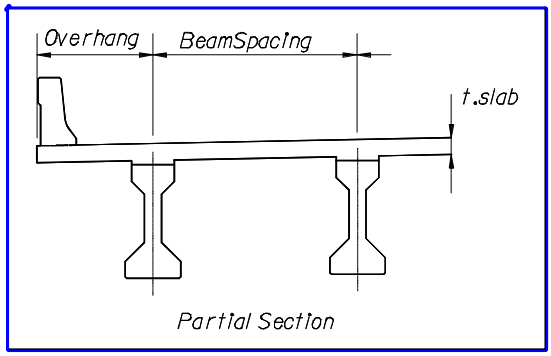

Bridge design span length..... $L_{span} = 90\,ft$

Number of beams..... $N_{beams} = 11$

Beam Spacing..... $BeamSpacing = 8\,ft$

$S := BeamSpacing$

Average Buildup..... $h_{buildup} = 1\,in$

Beam top flange width..... $b_{tf} = 20\,in$

Thickness of deck slab..... $t_{slab} = 8\,in$

Milling surface thickness..... $t_{mill} = 0\,in$

Deck overhang..... $Overhang = 4.542\,ft$

Dynamic Load Allowance..... $IM = 1.33$

Bridge skew..... $Skew = -30\,deg$

B. Approximate Methods of Analysis - Decks [LRFD 4.6.2]

B1. Width of Equivalent Interior Strips

The deck is designed using equivalent strips of deck width. The equivalent strips account for the longitudinal distribution of LRFD wheel loads and are not subject to width limitations. The width in the transverse direction is calculated for both positive and negative moments.

Width of equivalent strip for positive moment.....

$$E_{pos} := \left(26 + 6.6 \cdot \frac{S}{ft}\right) \cdot in$$

$$E_{pos} = 78.8\,in$$

Width of equivalent strip for negative moment.....

$$E_{neg} := \left(48 + 3.0 \cdot \frac{S}{ft}\right) \cdot in$$

$$E_{neg} = 72.0\,in$$

The equivalent strips can be modeled as continuous beams on rigid supports, since typical AASHTO beam bridges do not have any transverse beams.

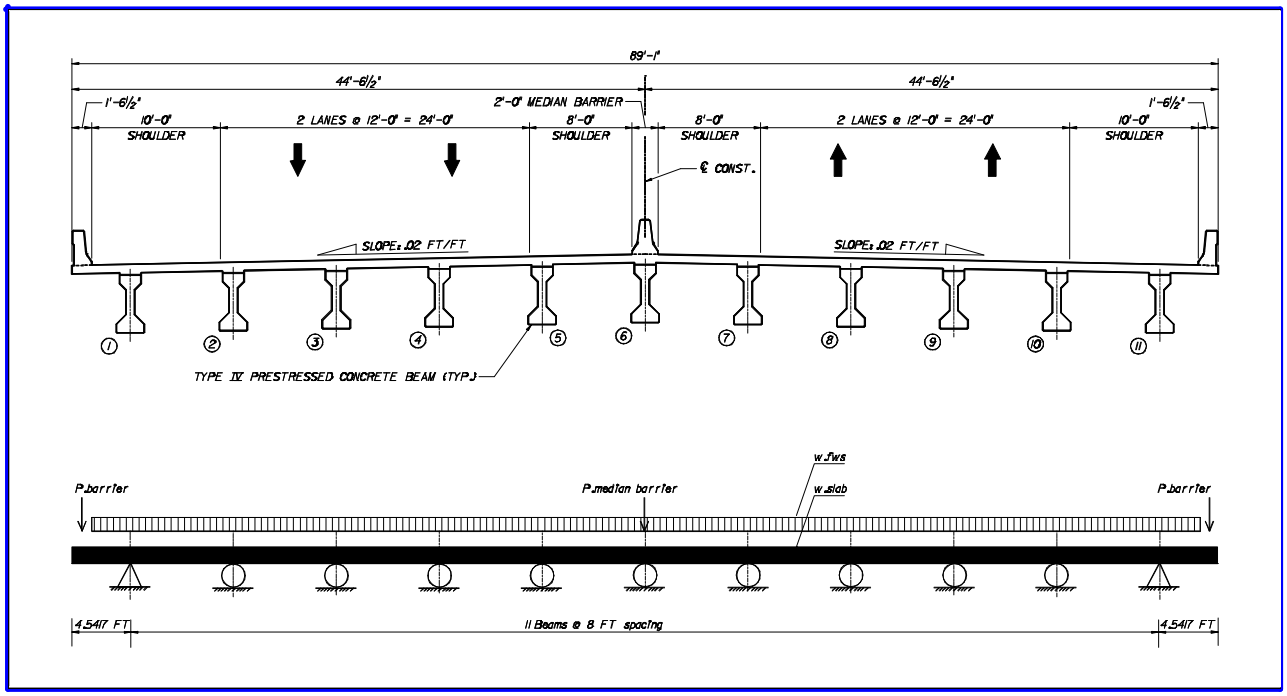

B2. Live Loads for Equivalent Strips

All HL-93 wheel loads shall be applied to the equivalent strip of deck width, since the spacing of supporting components in the secondary direction (longitudinal to beams) exceeds 1.5 times the spacing in the primary direction (transverse to beams).

HL-93 wheel load.....

$P := 16kip$

HL-93 wheel load for negative moment.....

$P_{neg} := \frac{P}{E_{neg}} \cdot (1 + IM)$

$P_{neg} = 6.2\,klf$

HL-93 wheel load for positive moment.....

$P_{pos} := \frac{P}{E_{pos}} \cdot (1 + IM)$

$P_{pos} = 5.7\,klf$

HL-93 lane load.....

$w_{lane} := 0.64 \cdot klf$

The lane load is applied over a 10 ft width for positive and negative moment.....

$w_{lane.strip} := \frac{w_{lane}}{10}$

$w_{lane.strip} = 0.064\,klf$

Location of Negative Live Load Design Moment

The negative live load design moment is taken at a distance from the supports.....

$Loc_{negative} := \min\left(\frac{1}{3} \cdot b_{tf}, 15 \cdot in\right)$

$Loc_{negative} = 6.7\,in$

HL-93 Live Load Design Moments

Instead of performing a continuous beam analysis, Table A4.1-1 in Appendix 4 may be used to determine the live load design moments. The following assumptions and limitations should be considered when using these moments:

- The moments are calculated by applying the equivalent strip method to concrete slabs supported on parallel beams.
- Multiple presence factors and dynamic load allowance are included.
- The values are calculated according to the location of the design section for negative moments in the deck (LRFD 4.6.2.1.6). For distances between the listed values, interpolation may be used.
- The moments are applicable for decks supported by at least three beams with a width between the centerlines of the exterior beams of not less than 14.0 ft.
- The values represent the upper bound for moments in the interior regions of the slab.
- A minimum and maximum total overhang width from the center of the exterior girder are evaluated. The minimum is 21 in. and the maximum is the smaller of $(0.625 \cdot BeamSpacing)$ and 6 ft.

- A railing barrier width of 21.0 in. is used to determine the clear overhang width. Florida utilizes a railing width of 18.5 in. The difference in moments from the diifferent railing width is expected to be within acceptable limits for practical design.

- The moments do not apply to deck overhangs, which need to be designed according to the provisions of **LRFD A13.4.1**.

		NEGATIVE MOMENT						
S	Positive	Distance from CL of Girder to Design Section for Negative Moment						
	Moment	0.0 in.	3 in.	6 in.	9 in.	12 in.	18 in.	24 in.
6 '-0"	4.83	4.88	4.19	3.50	2.88	2.31	1.39	1.07
6 '-3"	4.91	5.10	4.39	3.68	3.02	2.42	1.45	1.13
6 '-6"	5.00	5.31	4.57	3.84	3.15	2.53	1.50	1.20
6 '-9"	5.10	5.50	4.74	3.99	3.27	2.64	1.58	1.28
7 '-0"	5.21	5.98	5.17	4.36	3.56	2.84	1.63	1.37
7 '-3"	5.32	6.13	5.31	4.49	3.68	2.96	1.65	1.51
7 '-6"	5.44	6.26	5.43	4.61	3.78	3.15	1.88	1.72
7 '-9"	5.56	6.38	5.54	4.71	3.88	3.30	2.21	1.94
8 '-0"	5.69	6.48	5.65	4.81	3.98	3.43	2.49	2.16
8 '-3"	5.83	6.58	5.74	4.90	4.06	3.53	2.74	2.37
8 '-6"	5.99	6.66	5.82	4.98	4.14	3.61	2.96	2.58
8 '-9"	6.14	6.74	5.90	5.06	4.22	3.67	3.15	2.79
9 '-0"	6.29	6.81	5.97	5.13	4.28	3.71	3.31	3.00
9 '-3"	6.44	6.87	6.03	5.19	4.40	3.82	3.47	3.20
9 '-6"	6.59	7.15	6.31	5.46	4.66	4.04	3.68	3.39
9 '-9"	6.74	7.51	6.65	5.80	4.94	4.21	3.89	3.58
10 '-0"	6.89	7.85	6.99	6.13	5.26	4.41	4.09	3.77

For this example.....

$BeamSpacing = 8\ ft$

$Loc_{negative} = 6.7\ in$

Positive Live Load Design Moment..... $M_{LL.pos} := 5.69 \cdot ft \cdot kip$

Negative Live Load Design Moment..... $M_{LL.neg} := (6.7in - 6 \cdot in) \cdot \left[\frac{(3.98 \cdot ft \cdot kip - 4.81 \cdot ft \cdot kip)}{(9 \cdot in - 6 \cdot in)} \right] + 4.81 \cdot (ft \cdot kip)$

$M_{LL.neg} = 4.62\ ft \cdot kip$

*(**Note**: Interpolated value)*

B3. Dead Load Design Moments

Design width of deck slab..... $b_{slab} := 1ft$

"DC" loads include the dead load of structural components and non-structural attachments

Self-weight of deck slab..... $w_{slab} := \left[\left(t_{slab} + t_{mill}\right) \cdot b_{slab}\right] \cdot \gamma_{conc}$

$w_{slab} = 0.100 \frac{kip}{ft}$

Weight of traffic barriers..... $P_{barrier} := w_{barrier} \cdot b_{slab}$

$P_{barrier} = 0.4\,kip$

Weight of median barrier..... $P_{median.barrier} := w_{median.bar} \cdot b_{slab}$

$P_{median.barrier} = 0.5\,kip$

"DW" loads include the dead load of a future wearing surface and utilities

Weight of Future Wearing Surface..... $w_{fws} := \rho_{fws} \cdot b_{slab}$

$w_{fws} = 0.015\,klf$

Analysis Model for Dead Loads

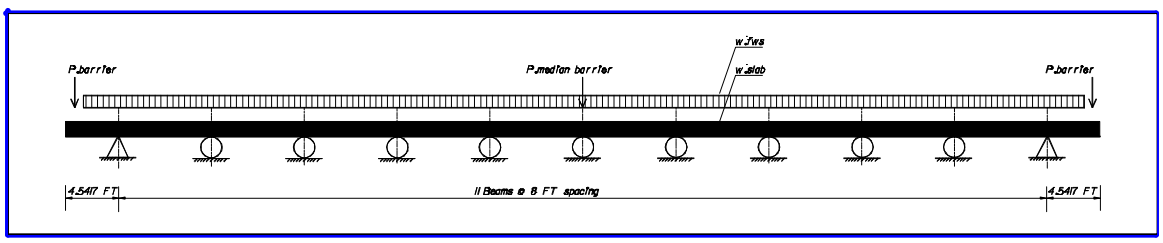

Any plane frame program can be utilized to develop the moments induced by the dead loads. For this example, Larsa was used to determine the dead load design moments for both the DC and DW loads.

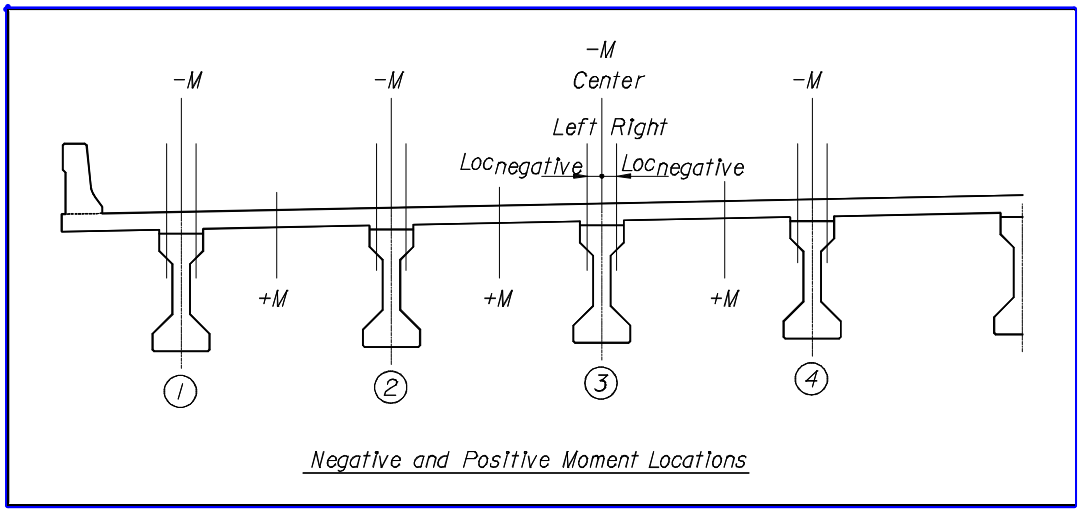

	Design Moments for DC Loads			
	Positive	Negative Moment (k-ft)		
Beam / Span	Moment (k-ft)	Center	Left	Right
1	0.05	-2.73	-2.26	-2.34
2	0.52	0.03	0.04	0.18
3	0.21	-0.68	-0.43	-0.47
4	0.28	-0.50	-0.31	-0.30

The governing negative design moment for DC loads occurs at beam 1. However, this moment is due to the overhang, which typically has more negative moment steel requirements than the interior regions of the deck. Since the overhang is designed separately, the overhang moments are not considered here. For the interior regions, the positive moment in Span 2 and the negative moment to the right of beam 3 govern.

Positive moment..... $M_{DC.pos} := 0.52 \cdot kip \cdot ft$

Negative moment..... $M_{DC.neg} := 0.47 \cdot kip \cdot ft$

	Design Moments for DW Loads			
	Positive	Negative Moment (k-ft)		
Beam / Span	Moment (k-ft)	Center	Left	Right
1	0.04	-0.07	-0.05	-0.04
2	0.04	-0.08	-0.05	-0.05
3	0.04	-0.08	-0.05	-0.05
4	0.04	-0.08	-0.05	-0.05

The DW moments are approximately constant for the negative and positive design moments.

Positive moment..... $M_{DW.pos} := 0.04 \cdot kip \cdot ft$

Negative moment..... $M_{DW.neg} := 0.05 \cdot kip \cdot ft$

B4. Limit State Moments

The service and strength limit states are used to design the section

Service I Limit State

Positive Service I Moment..... $M_{serviceI.pos} := M_{DC.pos} + M_{DW.pos} + M_{LL.pos}$

$M_{serviceI.pos} = 6.3\ kip \cdot ft$

Negative Service I Moment..... $M_{serviceI.neg} := M_{DC.neg} + M_{DW.neg} + M_{LL.neg}$

$M_{serviceI.neg} = 5.1\ kip \cdot ft$

Strength I Limit State

Positive Strength I Moment..... $M_{strengthI.pos} := 1.25M_{DC.pos} + 1.50 \cdot M_{DW.pos} + 1.75 \cdot M_{LL.pos}$

$M_{strengthI.pos} = 10.7\ kip \cdot ft$

Negative Strength I Moment..... $M_{strengthI.neg} := 1.25M_{DC.neg} + 1.50 \cdot M_{DW.neg} + 1.75 \cdot M_{LL.neg}$

$M_{strengthI.neg} = 8.7\ kip \cdot ft$

C. Moment Design

A few recommendations on bar size and spacing are available to minimize problems during construction.

- The same size and spacing of reinforcing should be utilized for both the negative and positive moment regions.
- If this arrangement is not possible, the top and bottom reinforcement should be spaced as a multiple of each other. This pattern places the top and bottom bars in the same grid pattern, and any additional steel is placed between these bars.

The design procedure consists of calculating the reinforcement required to satisfy the design moment, then checking this reinforcement against criteria for crack control, minimum reinforcement, maximum reinforcement, shrinkage and temperature reinforcement, and distribution of reinforcement. The procedure is the same for both positive and negative moment regions.

C1. Positive Moment Region Design - Flexural Resistance [LRFD 5.7.3.2]

Factored resistance

$$M_r = \phi \cdot M_n$$

Nominal flexural resistance

$$M_n = A_{ps} \cdot f_{ps} \cdot \left(d_p - \frac{a}{2}\right) + A_s \cdot f_y \cdot \left(d_s - \frac{a}{2}\right) - A'_s \cdot f'_y \cdot \left(d'_s - \frac{a}{2}\right) + 0.85 \cdot f'_c \cdot (b - b_w) \cdot \beta_1 \cdot h_f \cdot \left(\frac{a}{2} - \frac{h_f}{2}\right)$$

Simplifying the nominal flexural resistance

$$M_n = A_s \cdot f_y \cdot \left(d_s - \frac{a}{2}\right) \qquad \text{where} \qquad a = \frac{A_s \cdot f_y}{0.85 \cdot f'_c \cdot b}$$

Using variables defined in this example..... $M_r = \phi \cdot A_{s.pos} \cdot f_y \cdot \left[d_s - \frac{1}{2} \cdot \left(\frac{A_{s.pos} \cdot f_y}{0.85 \cdot f_{c.slab} \cdot b}\right)\right]$

where $M_r := M_{strengthI.pos}$

$f_{c.slab} = 4.5\,ksi$

$f_y = 60\,ksi$

$\phi = 0.9$

$t_{slab} = 8\,in$

$b := b_{slab}$

$t_{slab} = h$

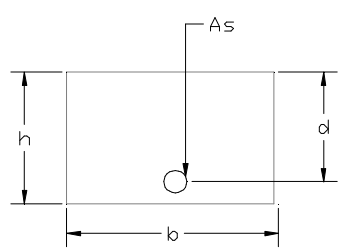

$b = 12\,in$

Initial assumption for area of steel required

Size of bar..... bar := "5"

Proposed bar spacing..... $spacing_{pos} := 8 \cdot in$

Bar area..... $A_{bar} = 0.310\,in^2$

Bar diameter..... $dia = 0.625\,in$

Area of steel provided per foot of slab..... $A_{s.pos} := \frac{A_{bar} \cdot 1ft}{spacing_{pos}}$

$A_{s.pos} = 0.47\,in^2$

Distance from extreme compressive fiber to centroid of reinforcing steel..... $d_s := t_{slab} - cover_{deck} - \frac{dia}{2}$

$d_s = 5.7\,in$

Solve the quadratic equation for the area of steel required.....

Given $M_r = \phi \cdot A_{s.pos} \cdot f_y \cdot \left[d_s - \frac{1}{2} \cdot \left(\frac{A_{s.pos} \cdot f_y}{0.85 \cdot f_{c.slab} \cdot b} \right) \right]$

$A_{s.reqd} := Find(A_{s.pos})$

Reinforcing steel required..... $A_{s.reqd} = 0.44\,in^2$

The area of steel provided, $A_{s.pos} = 0.47\,in^2$, should be greater than the area of steel required, $A_{s.reqd} = 0.44\,in^2$. If not, decrease the spacing of the reinforcement. Once $A_{s.pos}$ is greater than $A_{s.reqd}$, the proposed reinforcing is adequate for the design moments.

C2. Negative Moment Region Design - Flexural Resistance [LRFD 5.7.3.2]

Variables:

$M_r := M_{strengthI.neg}$

$f_{c.slab} = 4.5\,ksi$

$f_y = 60\,ksi$

$\phi = 0.9$

$t_{slab} = 8\,in$

$b := b_{slab}$

$t_{slab} = h$

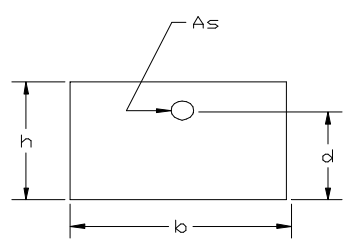

$b = 12\,in$

Initial assumption for area of steel required

Size of bar..... bar = "5"

Proposed bar spacing..... $spacing_{neg} := 10 \cdot in$

Bar area..... $A_{bar} = 0.310\,in^2$

Bar diameter..... $dia = 0.625\,in$

Area of steel provided per foot of slab..... $A_{s.neg} := \frac{A_{bar} \cdot 1ft}{spacing_{neg}}$

$A_{s.neg} = 0.37 in^2$

Distance from extreme compressive fiber to centroid of reinforcing steel..... $d_s := t_{slab} - cover_{deck} - \frac{dia}{2}$

$d_s = 5.7 in$

Solve the quadratic equation for the area of steel required..... Given $M_r = \phi \cdot A_{s.neg} \cdot f_y \cdot \left[d_s - \frac{1}{2} \cdot \left(\frac{A_{s.neg} \cdot f_y}{0.85 \cdot f_{c.slab} \cdot b} \right) \right]$

$A_{s.reqd} := Find(A_{s.neg})$

Reinforcing steel required..... $A_{s.reqd} = 0.36 in^2$

The area of steel provided, $A_{s.neg} = 0.37 in^2$, should be greater than the area of steel required, $A_{s.reqd} = 0.36 in^2$. If not, decrease the spacing of the reinforcement. Once $A_{s.neg}$ is greater than $A_{s.reqd}$, the proposed reinforcing is adequate for the design moments.

C3. Crack Control by Distribution Reinforcement [LRFD 5.7.3.4]

Concrete is subjected to cracking. Limiting the width of expected cracks under service conditions increases the longevity of the structure. Potential cracks can be minimized through proper placement of the reinforcement. The check for crack control requires that the actual stress in the reinforcement should not exceed the service limit state stress (LRFD 5.7.3.4). The stress equations emphasize bar spacing rather than crack widths.

Stress in the mild steel reinforcement at the service limit state

$$f_{sa} = \frac{z}{(d_c \cdot A)^{\frac{1}{3}}} \le 0.6 \cdot f_y$$

Crack width parameter

$$z = \begin{pmatrix} \text{"moderate exposure"} & 170 \\ \text{"severe exposure"} & 130 \\ \text{"buried structures"} & 100 \end{pmatrix} \cdot \frac{kip}{in}$$

The environmental classifications for Florida designs do not match the classifications to select the crack width parameter. For this example, a "Slightly" or "Moderately" aggressive environment corresponds to "moderate exposure" and an "Extremely" aggressive environment corresponds to "severe exposure".

$Environment_{super} = \text{"Slightly"}$ aggressive environment

$z := 170 \cdot \frac{kip}{in}$

Positive Moment

Distance from extreme tension fiber to center of closest bar (concrete cover need not exceed 2 in.).....

$$d_c := \min\left(t_{slab} - d_s, 2\cdot in + \frac{dia}{2}\right)$$

$$d_c = 2.313\,in$$

Number of bars per design width of slab...

$$n_{bar} := \frac{b}{spacing_{pos}}$$

$$n_{bar} = 1.5$$

Effective tension area of concrete surrounding the flexural tension reinforcement.....

$$A := \frac{(b)\cdot(2\cdot d_c)}{n_{bar}}$$

$$A = 37.0\,in^2$$

Service limit state stress in reinforcement..

$$f_{sa} := \min\left[\frac{z}{(d_c\cdot A)^{\frac{1}{3}}}, 0.6\cdot f_y\right]$$

$$f_{sa} = 36.0\,ksi$$

The neutral axis of the section must be determined to determine the actual stress in the reinforcement. This process is iterative, so an initial assumption of the neutral axis must be made.

$$x := 1.6\cdot in$$

Given $\frac{1}{2}\cdot b\cdot x^2 = \frac{E_s}{E_{c.slab}}\cdot A_{s.pos}\cdot(d_s - x)$

$$x_{na} := Find(x)$$

$$x_{na} = 1.6\,in$$

Compare the calculated neutral axis x_{na} with the initial assumption x. If the values are not equal, adjust $x = 1.6\,in$ to equal $x_{na} = 1.6\,in$.

Tensile force in the reinforcing steel due to service limit state moment. .....

$$T_s := \frac{M_{serviceI.pos}}{d_s - \frac{x_{na}}{3}}$$

$$T_s = 14.572\,kip$$

Actual stress in the reinforcing steel due to service limit state moment.....

$$f_{s.actual} := \frac{T_s}{A_{s.pos}}$$

$$f_{s.actual} = 31.3\,ksi$$

The service limit state stress in the reinforcement should be greater than the actual stress due to the service limit state moment.

$$LRFD_{5.7.3.3.4a} := \begin{cases} \text{"OK, crack control for +M is satisfied"} & \text{if } f_{s.actual} \le f_{sa} \\ \text{"NG, crack control for +M not satisfied, provide more reinforcement"} & \text{otherwise} \end{cases}$$

$LRFD_{5.7.3.3.4a} = \text{"OK, crack control for +M is satisfied"}$

Negative Moment

Distance from extreme tension fiber to center of closest bar (concrete cover need not exceed 2 in.).....

$$d_c := \min\left(t_{slab} - d_s, 2 \cdot in + \frac{dia}{2}\right)$$

$d_c = 2.313\,in$

Number of bars per design width of slab...

$$n_{bar} := \frac{b}{spacing_{neg}}$$

$n_{bar} = 1.2$

Effective tension area of concrete surrounding the flexural tension reinforcement.....

$$A := \frac{(b) \cdot (2 \cdot d_c)}{n_{bar}}$$

$A = 46.3\,in^2$

Service limit state stress in reinforcement..

$$f_{sa} := \min\left[\frac{z}{(d_c \cdot A)^{\frac{1}{3}}}, 0.6 \cdot f_y\right]$$

$f_{sa} = 35.8\,ksi$

The neutral axis of the section must be determined to determine the actual stress in the reinforcement. This process is iterative, so an initial assumption of the neutral axis must be made.

$x := 1.5 \cdot in$

Given $\frac{1}{2} \cdot b \cdot x^2 = \frac{E_s}{E_{c.slab}} \cdot A_{s.neg} \cdot (d_s - x)$

$x_{na} := Find(x)$

$x_{na} = 1.5\,in$

Compare the calculated neutral axis x_{na} with the initial assumption x. If the values are not equal, adjust $x = 1.5\,in$ to equal $x_{na} = 1.5\,in$.

Tensile force in the reinforcing steel due to service limit state moment. .....

$$T_s := \frac{M_{serviceI.neg}}{d_s - \frac{x_{na}}{3}}$$

$T_s = 11.863\,kip$

Actual stress in the reinforcing steel due to service limit state moment..... $f_{s.actual} := \frac{T_s}{A_{s.neg}}$

$f_{s.actual} = 31.9\,ksi$

The service limit state stress in the reinforcement should be greater than the actual stress due to the service limit state moment.

$$LRFD_{5.7.3.3.4b} := \begin{cases} \text{"OK, crack control for -M is satisfied"} & \text{if } f_{s.actual} \le f_{sa} \\ \text{"NG, crack control for -M not satisfied, provide more reinforcement"} & \text{otherwise} \end{cases}$$

$LRFD_{5.7.3.3.4b} = \text{"OK, crack control for -M is satisfied"}$

C4. Limits for Reinforcement [LRFD 5.7.3.3]

Maximum Reinforcement

The maximum reinforcement requirements ensure the section has sufficient ductility and is not overreinforced. The greater reinforcement from the positive and negative moment sections is checked.

Area of steel provided..... $A_s := \max(A_{s.pos}, A_{s.neg})$

$A_s = 0.47\,in^2$

Stress block factor..... $\beta_1 := \max\left[0.85 - 0.05\cdot\left(\frac{f_{c.slab} - 4000\cdot psi}{1000\cdot psi}\right), 0.65\right]$

$\beta_1 = 0.825$

Distance from extreme compression fiber to the neutral axis of section..... $c := \frac{A_s\cdot f_y}{0.85\cdot f_{c.slab}\cdot\beta_1\cdot b}$

$c = 0.7\,in$

Effective depth from extreme compression fiber to centroid of the tensile reinforcement.

$$d_e = \frac{A_s\cdot f_{ps}\cdot d_p + A_s\cdot f_y\cdot d_s}{A_{ps}\cdot f_{ps} + A_s\cdot f_y}$$

Simplifying for this example..... $d_e := d_s$

$d_e = 5.7\,in$

Ratio for maximum reinforcement check

$$\frac{c}{d_e} = 0.13$$

The $\frac{c}{d_e}$ ratio should be less than 0.42 to satisfy maximum reinforcement requirements.

$$LRFD_{5.7.3.3.1} := \begin{cases} \text{"OK, maximum reinforcement requirements are satisfied"} & \text{if } \frac{c}{d_e} \le 0.42 \\ \text{"NG, section is over reinforced, so redesign!"} & \text{otherwise} \end{cases}$$

$LRFD_{5.7.3.3.1}$ = "OK, maximum reinforcement requirements are satisfied"

Minimum Reinforcement

The minimum reinforcement requirements ensure the moment capacity provided is at least 1.2 times greater than the cracking moment.

Modulus of Rupture..... $f_r := 0.24 \cdot \sqrt{f_{c.slab} \cdot ksi}$

$f_r = 509.1\ psi$

Distance from the extreme tensile fiber to the neutral axis of the composite section... $y := \frac{t_{slab}}{2}$

$y = 4.0\ in$

Moment of inertia for the section..... $I_{slab} := \frac{1}{12} \cdot b \cdot t_{slab}^{\ 3}$

$I_{slab} = 512.0\ in^4$

Section modulus..... $S := \frac{I_{slab}}{y}$

$S = 128.0\ in^3$

Cracking moment..... $M_{cr} := f_r \cdot S$

$M_{cr} = 5.4\ kip \cdot ft$

Minimum reinforcement required..... $A_{min} := \dfrac{\frac{1.2 \cdot M_{cr}}{\phi}}{f_y \cdot \left[d_s - \frac{1}{2} \left(\frac{A_s \cdot f_y}{0.85 \cdot f_{c.slab} \cdot b} \right) \right]}$

$A_{min} = 0.27\ in^2$

Required area of steel for minimum reinforcement should not be less than $A_s \cdot 133\%$ or A_{min} ..... $A_{s.req} := \min(A_s \cdot 133 \cdot \%, A_{min})$

$A_{s.req} = 0.27\ in^2$

Maximum bar spacing for mimimum reinforcement..... $spacing_{max} := \dfrac{b}{\left(\frac{A_{s.req}}{A_{bar}} \right)}$

$spacing_{max} = 13.8\ in$

Greater bar spacing from positive and negative moment section..... $spacing := \max(spacing_{pos}, spacing_{neg})$

$spacing = 10\ in$

The bar spacing should be less than the maximum bar spacing for minimum reinforcement

$$LRFD_{5.7.3.3.2} := \begin{cases} \text{"OK, minimum reinforcement requirements are satisfied"} & \text{if } spacing \le spacing_{max} \\ \text{"NG, section is under-reinforced, so redesign!"} & \text{otherwise} \end{cases}$$

$LRFD_{5.7.3.3.2}$ = "OK, minimum reinforcement requirements are satisfied"

C5. Shrinkage and Temperature Reinforcement [LRFD 5.10.8.2]

Shrinkage and temperature reinforcement provided

Size of bar ("4" "5" "6")..... $bar_{st} := \text{"5"}$

Bar spacing..... $bar_{spa.st} := 12 \cdot in$

Bar area..... $A_{bar} = 0.31\,in^2$

Bar diameter..... $dia = 0.625\,in$

Gross area of section..... $A_g := b_{slab} \cdot t_{slab}$

$A_g = 96.0\,in^2$

Minimum area of shrinkage and temperature reinforcement..... $A_{ST} := \dfrac{0.11 \cdot ksi \cdot A_g}{f_y}$

$A_{ST} = 0.18\,in^2$

Maximum spacing for shrinkage and temperature reinforcement..... $spacing_{ST} := \min\left(\dfrac{b}{\dfrac{A_{ST}}{A_{bar}}}, 3 \cdot t_{slab}, 18 \cdot in\right)$

$spacing_{ST} = 18.0\,in$

The bar spacing should be less than the maximum spacing for shrinkage and temperature reinforcement

$$LRFD_{5.7.10.8} := \begin{cases} \text{"OK, minimum shrinkage and temperature requirements"} & \text{if } spacing \le spacing_{ST} \\ \text{"NG, minimum shrinkage and temperature requirements"} & \text{otherwise} \end{cases}$$

$LRFD_{5.7.10.8}$ = "OK, minimum shrinkage and temperature requirements"

C6. Distribution of Reinforcement [LRFD 9.7.3.2]

The primary reinforcement is placed perpendicular to traffic, since the effective strip is perpendicular to traffic. Reinforcement shall also be placed in the secondary direction (parallel to traffic) for load distribution purposes. This reinforcement is placed in the bottom of the deck slab as a percentage of the primary reinforcement.

Distribution reinforcement provided

Size of bar ("4" "5" "6")..... $bar_{dist} := \text{"5"}$

Bar spacing..... $bar_{spa.dist} := 10 \cdot in$

Bar area..... $A_{bar} = 0.31\,in^2$

Bar diameter..... $dia = 0.625\,in$

The effective span length (LRFD 9.7.2.3) is the distance between the flange tips plus the flange overhang.....

$$Slab_{eff.Length} := (BeamSpacing - b_w) - (b_{tf} - b_w) \cdot 0.5$$

$$Slab_{eff.Length} = 6.833\,ft$$

The area for secondary reinforcement should not exceed 67% of the area for primary reinforcement.....

$$\%A_{steel} := \min\left(\frac{220}{\sqrt{\frac{Slab_{eff.Length}}{ft}}}\%, 67\%\right)$$

$$\%A_{steel} = 0.67$$

Required area for secondary reinforcement.....

$$A_{s.DistR} := A_{s.pos} \cdot \%A_{steel}$$

$$A_{s.DistR} = 0.31\,in^2$$

Maximum spacing for secondary reinforcement.....

$$MaxSpacing_{DistR} := \frac{b}{\left(\frac{A_{s.DistR}}{A_{bar}}\right)}$$

$$MaxSpacing_{DistR} = 11.9\,in$$

The bar spacing should not exceed the maximum spacing for secondary reinforcement

$$LRFD_{9.7.3.2} := \begin{cases} \text{"OK, distribution reinforcement requirements"} & \text{if } bar_{spa.dist} \le MaxSpacing_{DistR} \\ \text{"NG, distribution reinforcement requirements"} & \text{otherwise} \end{cases}$$

$$LRFD_{9.7.3.2} = \text{"OK, distribution reinforcement requirements"}$$

C7. Summary of Reinforcement Provided and Comparison with Empirical Design

Transverse reinforcing

Bar size $bar = "5"$

Top spacing $spacing_{neg} = 10.0\,in$

Bottom spacing $spacing_{pos} = 8.0\,in$

Shrinkage and temperature reinforcing

Bar size $bar_{st} = "5"$

Bottom spacing $bar_{spa.st} = 12.0\,in$

$LRFD_{5.7.10.8} = "OK, minimum\ shrinkage\ and\ temperature\ requirements"$

Longitudinal Distribution reinforcing

Bar size $bar_{dist} = "5"$

Bottom spacing $bar_{spa.dist} = 10.0\,in$

$LRFD_{9.7.3.2} = "OK, distribution\ reinforcement\ requirements"$

A comparison per square foot of deck slab shows that the traditional design method requires about 22% more reinforcement than what is provided with the empirical design method. However, in order to improve constructability, reinforcing at top and bottom of the slab are kept at the same spacing (reduces field errors in placement). Therefore, the actual increase in the reinforcing versus the empirical design is about 34% for this design example.

Deck Slab Design Comparison

	Empirical Design		Traditional Design			
	Bar size & spacing	Area Provided / ft (in2)	Bar size & spacing required	Area Required /ft (in2)	Bar size & spacing provided	Area Provided / ft (in2)
Main Tranverse Reinforcing -						
Top (transverse)	#5 @12"	0.31	#5 @ 10"	0.37	#5 @ 8"	0.46
Bottom (transverse)	#5 @12"	0.31	#5 @ 8"	0.46	#5 @ 8"	0.46
Shrinkage and Temperature -						
Top (longitudinal)	#5 @12"	0.31	#5 @12"	0.31	#5 @10"	0.37
Distribution Steel -						
Bottom (longitidinal)	#5 @12"	0.31	#5 @10"	0.37	#5 @10"	0.37
Comparison (reinforcing area per sf of slab)		1.24		1.51		1.66
Ratios (Percentage)		0%		22%		34%

Defined Units

Deck Overhang Design

References

Reference:F:\HDRDesignExamples\Ex1_PCBeam\207DeckTra.mcd(R)

Description

This section provides the overhang deck design.

Page Contents

Page	Contents
141	**LRFD Criteria**
141	**FDOT Criteria**
142	**A. Input Variables**
143	**B. Strength Limit State Design**
	B1. Width of Equivalent Strip
	B2. Live Load Design Moment
	B3. Dead Load Design Moments
	B4. Limit State Moments
146	**C. Moment Design**
	C1. Negative Moment Region Design - Flexural Resistance [LRFD 5.7.3.2]
	C2. Crack Control by Distribution Reinforcement [LRFD 5.7.3.4]
	C3. Limits for Reinforcement [LRFD 5.7.3.3]
	C4. Shrinkage and Temperature Reinforcement [LRFD 5.10.8.2]
	C5. Summary

LRFD Criteria

Live Loads - Application of Design Vehicular Live Loads - Deck Overhang Load [LRFD 3.6.1.3.4

This section is not applicable for Florida designs, since the barriers are not designed as structurally continuous and composite with the deck slab.

Static Analysis - Approximate Methods of Analysis - Decks [LRFD 4.6.2.1]

Empirical Design - General - Application [LRFD 9.7.2.2]

The empirical deck design shall not be applied to overhangs.

Railings [LRFD Chapter 13]

Deck Overhang Design [LRFD A13.4]

FDOT Criteria

Deck Slab Design [SDG 4.2.4]

The deck overhang shall be designed using the traditional design method. The deck overhangs are designed for three limit state conditions:

- Extreme event limit state - Transverse and longitudinal vehicular collision forces.
- Extreme event limit state - Vertical collision forces
- Strength limit state - Equivalent line load, DL + LL

The extreme event limit states can be satisfied by providing a minimum area of reinforcement in the deck overhang. The design method used for the deck slab influences the minimum reinforcement.

Deck slab designed by the empirical design method

$A_{s.Overhang.Empirical} := 0.92 \cdot in^2$ per foot of overhang slab

Deck slab designed by the traditional design method:

$A_{s.Overhang.Traditional} := 0.80 \cdot in^2$ per foot of overhang slab

In this example, the deck is designed using the empirical design method. (The traditional design method was presented only for comparison purposes.)

$A_{s.TL4} := A_{s.Overhang.Empirical}$

$A_{s.TL4} = 0.92\,in^2$ per foot of overhang slab

Superstructure Components - Traffic Railings [SDG 6.7]

All new traffic railing barriers shall satisfy LRFD Chapter 13, TL-4 criteria.

A. Input Variables

Beam top flange width..... $b_{tf} = 20\,in$

Thickness of slab..... $t_{slab} = 8\,in$

Milling surface thickness..... $t_{mill} = 0\,in$

Deck overhang..... Overhang = 4.5417 ft

Dynamic load allowance..... IM = 1.33

Proposed reinforcement detail.....

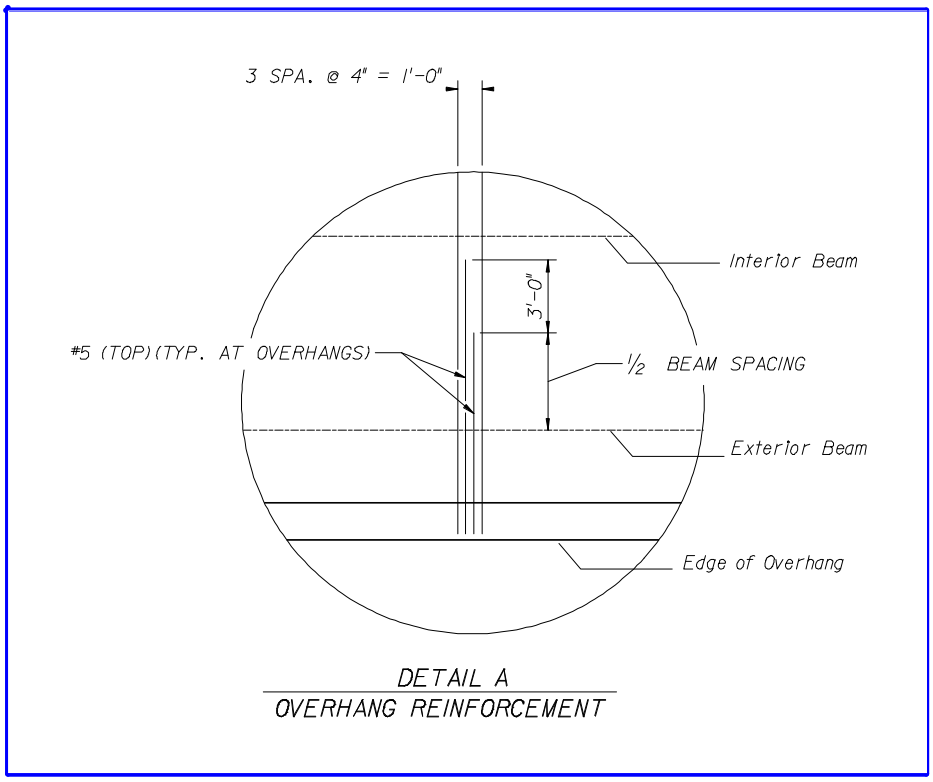

B. Strength Limit State Design

B1. Width of Equivalent Strip

The overhang section is designed using equivalent strips of deck width. The strip is perpendicular to traffic and accounts for the longitudinal distribution of LRFD wheel loads. To calculate the equivalent width, the distance from the wheel load to the location of the negative live load moment must be determined.

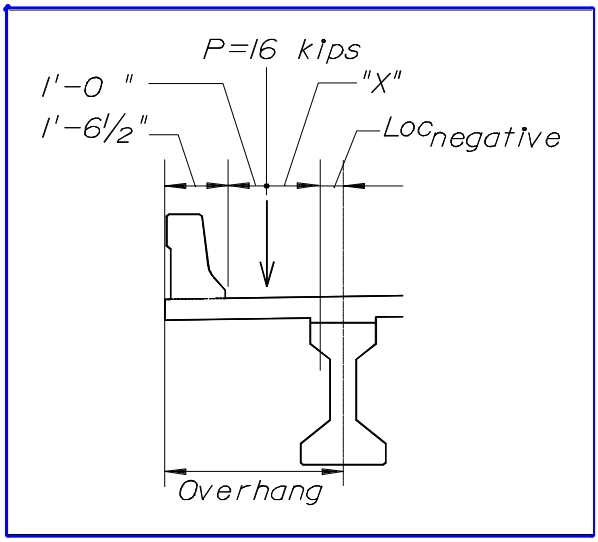

Distance from center of exterior beam to location of overhang design moment.....

$$Loc_{negative} = \min\left(\frac{1}{3}\cdot b_{tf}, 15\cdot in\right)$$

$$Loc_{negative} = 6.7\ in$$

Distance from wheel load to location of overhang design moment.....

$$X := Overhang - 1.5417\cdot ft - 1\cdot ft - Loc_{negative}$$

$$X = 1.444\ ft$$

Equivalent width of primary strip for overhang.....

$$E_{overhang} := \left(45.0 + 10.0\cdot\frac{X}{ft}\right)\cdot in$$

$$E_{overhang} = 59.4\ in$$

B2. Live Load Design Moment

The live load design moment for the deck overhang is calculated using the LRFD HL-93 truck load and lane load. A one foot strip is utilized in the calculations.

HL-93 wheel load.....

$$P = 16\ kip$$

HL-93 wheel load for the overhang moment.....

$$P_{overhang} := \frac{P}{E_{overhang}}\cdot(IM)\cdot(1\cdot ft)$$

$$P_{overhang} = 4.3\ kip$$

HL-93 lane load..... $w_{lane} = 0.64\,klf$

Lane load for the overhang moment..... $w_{lane.overhang} := \frac{w_{lane}}{10}$

$w_{lane.overhang} = 0.064\,klf$

Moment arm for lane..... $X_{LL} := X + 1 \cdot ft$

$X_{LL} = 2.4\,ft$

Live load design moment for deck overhang..... $M_{LL} := P_{overhang} \cdot X + \frac{w_{lane.overhang} \cdot X_{LL}^2}{2}$

$M_{LL} = 6.4\,kip \cdot ft$

B3. Dead Load Design Moments

DC and DW dead loads are used for design. DC loads include the dead load of structural components and non-structural attachments. DW loads include the dead load of a future wearing surface and utilities.

Design width of deck overhang..... $b_{overhang} := 1ft$

DC Loads

Moment induced by self-weight of deck overhang

Moment arm for overhang..... $X_{overhang} := Overhang - Loc_{negative}$

$X_{overhang} = 4.0\,ft$

Self-weight of deck overhang..... $w_{overhang} := \left[\left(t_{slab} + t_{mill}\right) \cdot b_{overhang}\right] \cdot \gamma_{conc}$

$w_{overhang} = 0.100\,\frac{kip}{ft}$

Moment..... $M_{overhang} := \frac{w_{overhang} \cdot X_{overhang}^2}{2}$

$M_{overhang} = 0.8\,ft \cdot kip$

Moment induced by barrier load

Moment arm for barrier..... $X_{barrier} := Overhang - Loc_{negative} - \frac{1.5417 \cdot ft}{3}$

$X_{barrier} = 3.5\,ft$

Barrier load..... $P_{barrier} := w_{barrier} \cdot b_{overhang}$

$P_{barrier} = 0.4\,kip$

Moment..... $M_{barrier} := P_{barrier} \cdot X_{barrier}$

$M_{barrier} = 1.5\,ft \cdot kip$

Moment induced by DC loads..... $M_{DC} := M_{overhang} + M_{barrier}$

$M_{DC} = 2.3\,kip \cdot ft$

DW Loads

Moment induced by future wearing surface

Moment arm for future wearing surface..... $X_{fws} := Overhang - Loc_{negative} - 1.5417 \cdot ft$

$X_{fws} = 2.4\,ft$

Self-weight of future wearing surface. $w_{fws} := \rho_{fws} \cdot b_{overhang}$

$w_{fws} = 0.015\,\frac{kip}{ft}$

Moment..... $M_{fws} := \frac{w_{fws} \cdot X_{fws}^{2}}{2}$

$M_{fws} = 0.04\,ft \cdot kip$

Moment induced by DW loads..... $M_{DW} := M_{fws}$

$M_{DW} = 0.04\,kip \cdot ft$

B4. Limit State Moments

The service and strength limit state moments are used to design the section.

Service I Limit State

Overhang Service I Moment..... $M_{serviceI} := M_{DC} + M_{DW} + M_{LL}$

$M_{serviceI} = 8.7\,kip \cdot ft$

Strength I Limit State

Overhang Strength I Moment..... $M_{strengthI} := 1.25 M_{DC} + 1.50 \cdot M_{DW} + 1.75 \cdot M_{LL}$

$M_{strengthI} = 14.1\,kip \cdot ft$

C. Moment Design

The design procedure consists of calculating the reinforcement required to satisfy the design moment, then checking this reinforcement against criteria for crack control, minimum reinforcement, maximum reinforcement, and shrinkage and temperature reinforcement. The reinforcement must satisfy requirements for the extreme event limit states and the strength limit state.

C1. Negative Moment Region Design - Flexural Resistance [LRFD 5.7.3.2]

Reinforcement required for the extreme event limit states

$A_{s.TL4} = 0.92\,in^2$ per foot of deck overhang

Reinforcement Required for Strength Limit State

Factored resistance

$$M_r = \phi \cdot M_n$$

Nominal flexural resistance

$$M_n = A_{ps} \cdot f_{ps} \cdot \left(d_p - \frac{a}{2}\right) + A_s \cdot f_y \cdot \left(d_s - \frac{a}{2}\right) - A'_s \cdot f'_y \cdot \left(d'_s - \frac{a}{2}\right) + 0.85 \cdot f'_c \cdot (b - b_w) \cdot \beta_1 \cdot h_f \cdot \left(\frac{a}{2} - \frac{h_f}{2}\right)$$

Simplifying the nominal flexural resistance

$$M_n = A_s \cdot f_y \cdot \left(d_s - \frac{a}{2}\right)$$

$$a = \frac{A_s \cdot f_y}{0.85 \cdot f'_c \cdot b}$$

Using variables defined in this example,

$M_r := M_{strengthI}$

$f_{c.slab} = 4.5\,ksi$

$f_y = 60\,ksi$

$\phi = 0.9$

$t_{slab} = 8\,in$

$b = 12\,in$

$t_{slab} = h$

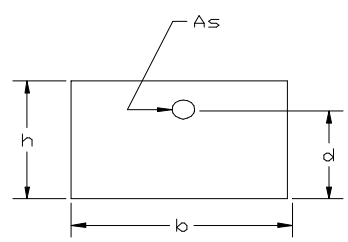

$b := b_{slab}$

Initial assumption for area of steel required

Size of bar..... bar = "5"

Proposed bar spacing..... spacing := 4·in

Bar area..... $A_{bar} = 0.310\,in^2$

Bar diameter..... $dia = 0.625\,in$

Area of steel provided per foot of slab..... $A_{s.overhang} := \frac{A_{bar} \cdot 1ft}{spacing}$

$A_{s.overhang} = 0.93\,in^2$

Distance from extreme compressive fiber to centroid of reinforcing steel..... $d_s := t_{slab} - cover_{deck} - \frac{dia}{2}$

$d_s = 5.7\,in$

Solve the quadratic equation for the area of steel required.....

Given $M_r = \phi \cdot A_{s.overhang} \cdot f_y \cdot \left[d_s - \frac{1}{2} \cdot \left(\frac{A_{s.overhang} \cdot f_y}{0.85 \cdot f_{c.slab} \cdot b} \right) \right]$

$A_{s.reqd} := Find(A_{s.overhang})$

Reinforcing area required..... $A_{s.reqd} = 0.59\,in^2$

The area of steel provided, $A_{s.overhang} = 0.93\,in^2$, should be greater than the area of steel required for the strength limit state, $A_{s.reqd} = 0.59\,in^2$, AND the extreme event limit state, $A_{s.TL4} = 0.92\,in^2$. If not, decrease the spacing of the reinforcement. Once $A_{s.overhang}$ is greater than the limit state requirements, the proposed reinforcing is adequate for the design moments.

C2. Crack Control by Distribution Reinforcement [LRFD 5.7.3.4]

Concrete is subjected to cracking. Limiting the width of expected cracks under service conditions increases the longevity of the structure. Potential cracks can be minimized through proper placement of the reinforcement. The check for crack control requires that the actual stress in the reinforcement should not exceed the service limit state stress (LRFD 5.7.3.4). The stress equations emphasize bar spacing rather than crack widths.

Stress in the mild steel reinforcement at the service limit state

$$f_{sa} = \frac{z}{(d_c \cdot A)^{\frac{1}{3}}} \le 0.6 \cdot f_y$$

Crack width parameter

$$z = \begin{pmatrix} \text{"moderate exposure"} & 170 \\ \text{"severe exposure"} & 130 \\ \text{"buried structures"} & 100 \end{pmatrix} \cdot \frac{kip}{in}$$

The environmental classifications for Florida designs do not match the classifications to select the crack width parameter. For this example, a "Slightly" or "Moderately" aggressive environment corresponds to "moderate exposure" and an "Extremely" aggressive environment corresponds to "severe exposure".

$Environment_{super} = \text{"Slightly"}$ aggressive environment

$z := 170 \cdot \frac{kip}{in}$

Distance from extreme tension fiber to center of closest bar (concrete cover need not exceed 2 in.).....

$d_c := \min\left(t_{slab} - d_s, 2 \cdot in + \frac{dia}{2}\right)$

$d_c = 2.313\,in$

Number of bars per design width of slab..

$n_{bar} := \frac{b}{spacing}$

$n_{bar} = 3$

Effective tension area of concrete surrounding the flexural tension reinforcement.....

$A := \frac{(b) \cdot (2 \cdot d_c)}{n_{bar}}$

$A = 18.5\,in^2$

Service limit state stress in reinforcement..

$f_{sa} := \min\left[\frac{z}{(d_c \cdot A)^{\frac{1}{3}}}, 0.6 \cdot f_y\right]$

$f_{sa} = 36.0\,ksi$

The neutral axis of the section must be determined to determine the actual stress in the reinforcement. This process is iterative, so an initial assumption of the neutral axis must be made.

$x := 2.1 \cdot in$

Given $\frac{1}{2} \cdot b \cdot x^2 = \frac{E_s}{E_{c.slab}} \cdot A_{s.overhang} \cdot (d_s - x)$

$x_{na} := Find(x)$

$x_{na} = 2.1\,in$

Compare the calculated neutral axis x_{na} with the initial assumption x. If the values are not equal, adjust $x = 2.1\,in$ to equal $x_{na} = 2.1\,in$.

Tensile force in the reinforcing steel due to service limit state moment. .....

$T_s := \frac{M_{serviceI}}{d_s - \frac{x_{na}}{3}}$

$T_s = 20.984\,kip$

Actual stress in the reinforcing steel due to service limit state moment.....

$f_{s.actual} := \frac{T_s}{A_{s.overhang}}$

$f_{s.actual} = 22.6\,ksi$

The service limit state stress in the reinforcement should be greater than the actual stress due to the service limit state moment.

$$LRFD_{5.7.3.3.4} := \begin{cases} \text{"OK, crack control for moment is satisfied"} & \text{if } f_{s.actual} \le f_{sa} \\ \text{"NG, increase the reinforcement provided"} & \text{otherwise} \end{cases}$$

$LRFD_{5.7.3.3.4}$ = "OK, crack control for moment is satisfied"

C3. Limits for Reinforcement [LRFD 5.7.3.3]

Maximum Reinforcement

The maximum reinforcement requirements ensure the section has sufficient ductility and is not overreinforced.

Area of steel provided..... $A_s := A_{s.overhang}$

$A_s = 0.93\,in^2$

Stress block factor..... $\beta_1 := \max\left[0.85 - 0.05\cdot\left(\frac{f_{c.slab} - 4000\cdot psi}{1000\cdot psi}\right), 0.65\right]$

$\beta_1 = 0.825$

Distance from extreme compression fiber to the neutral axis of section..... $c := \frac{A_s\cdot f_y}{0.85\cdot f_{c.slab}\cdot\beta_1\cdot b}$

$c = 1.5\,in$

Effective depth from extreme compression fiber to centroid of the tensile reinforcement

$$d_e = \frac{A_s\cdot f_{ps}\cdot d_p + A_s\cdot f_y\cdot d_s}{A_{ps}\cdot f_{ps} + A_s\cdot f_y}$$

Simplifying for this example..... $d_e := d_s$

$d_e = 5.7\,in$

Ratio for maximum reinforcement check.

$$\frac{c}{d_e} = 0.259$$

The $\frac{c}{d_e}$ ratio should be less than 0.42 to satisfy maximum reinforcement requirements.

$$LRFD_{5.7.3.3.1} := \begin{cases} \text{"OK, maximum reinforcement requirements are satisfied"} & \text{if } \frac{c}{d_e} \le 0.42 \\ \text{"NG, section is over reinforced, so redesign!"} & \text{otherwise} \end{cases}$$

$LRFD_{5.7.3.3.1}$ = "OK, maximum reinforcement requirements are satisfied"

Minimum Reinforcement

The minimum reinforcement requirements ensure the moment capacity provided is at least 1.2 times greater than the cracking moment.

Modulus of Rupture..... $f_r := 0.24 \cdot \sqrt{f_{c.slab} \cdot ksi}$

$f_r = 509.1\ psi$

Distance from the extreme tensile fiber to the neutral axis of the composite section... $y := \frac{t_{slab}}{2}$

$y = 4.0\ in$

Moment of inertia for the section..... $I_{slab} := \frac{1}{12} \cdot b \cdot t_{slab}^{3}$

$I_{slab} = 512.0\ in^4$

Section modulus..... $S := \frac{I_{slab}}{y}$

$S = 128.0\ in^3$

Cracking moment..... $M_{cr} := f_r \cdot S$

$M_{cr} = 5.4\ kip \cdot ft$

Minimum reinforcement required..... $A_{min} := \frac{\frac{1.2 \cdot M_{cr}}{\phi}}{f_y \cdot \left[d_s - \frac{1}{2} \left(\frac{A_s \cdot f_y}{0.85 \cdot f_{c.slab} \cdot b} \right) \right]}$

$A_{min} = 0.29\ in^2$

Required area of steel for minimum reinforcement should not be less than $A_s \cdot 133\%$ or A_{min} ..... $A_{s.req} := \min(A_s \cdot 133 \cdot \%, A_{min})$

$A_{s.req} = 0.29\ in^2$

Maximum bar spacing for mimimum reinforcement..... $spacing_{max} := \frac{b}{\left(\frac{A_{s.req}}{A_{bar}} \right)}$

$spacing_{max} = 13.0\ in$

The bar spacing should be less than the maximum bar spacing for minimum reinforcement

$$LRFD_{5.7.3.3.2} := \begin{cases} \text{"OK, minimum reinforcement requirements are satisfied"} & \text{if } spacing \le spacing_{max} \\ \text{"NG, section is under-reinforced, so redesign!"} & \text{otherwise} \end{cases}$$

$LRFD_{5.7.3.3.2}$ = "OK, minimum reinforcement requirements are satisfied"

C4. Shrinkage and Temperature Reinforcement [LRFD 5.10.8.2]

Gross area of section..... $A_g := b_{overhang} \cdot t_{slab}$

$A_g = 96.0\,in^2$

Minimum area of shrinkage and temperature reinforcement..... $A_{ST} := \dfrac{0.11 \cdot ksi \cdot A_g}{f_y}$

$A_{ST} = 0.18\,in^2$

Maximum spacing for shrinkage and temperature reinforcement..... $spacing_{ST} := \min\left(\dfrac{b}{\dfrac{A_{ST}}{A_{bar}}}, 3 \cdot t_{slab}, 18 \cdot in\right)$

$spacing_{ST} = 18.0\,in$

The bar spacing should be less than the maximum spacing for shrinkage and temperature reinforcement

$$LRFD_{5.7.10.8} := \begin{cases} \text{"OK, minimum shrinkage and temperature requirements"} & \text{if } spacing \le spacing_{ST} \\ \text{"NG, minimum shrinkage and temperature requirements"} & \text{otherwise} \end{cases}$$

$LRFD_{5.7.10.8}$ = "OK, minimum shrinkage and temperature requirements"

C5. Summary

Size of bar

bar = "5"

Proposed bar spacing

spacing = 4 in

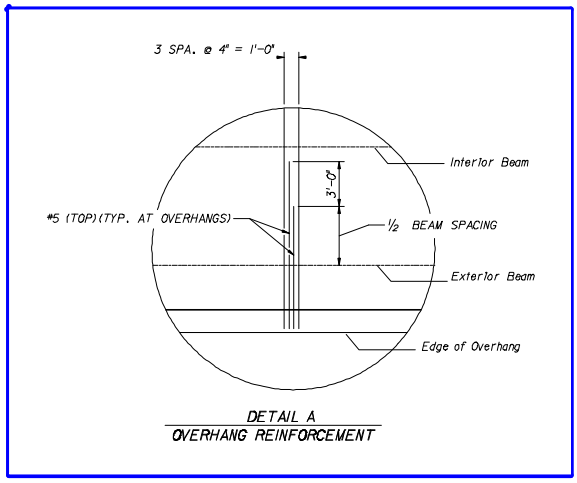

$LRFD_{5.7.3.3.4}$ = "OK, crack control for moment is satisfied"

$LRFD_{5.7.3.3.1}$ = "OK, maximum reinforcement requirements are satisfied"

$LRFD_{5.7.3.3.2}$ = "OK, minimum reinforcement requirements are satisfied"

$LRFD_{5.7.10.8}$ = "OK, minimum shrinkage and temperature requirements"

Defined Units

Creep and Shrinkage Parameters

References

Reference:F:\HDRDesignExamples\Ex1_PCBeam\208DeckCant.mcd(R)

Description

This section provides the creep and shrinkage factors as per the **LRFD 5.4.2.3.2 and 5.4.2.3.3.**

Page Contents

Page	Contents
153	**A. Input Variables**
	A1. Time Dependent Variables
	A2. Transformed Properties
	A3. Compute Volume to Surface area ratios
155	**B. Shrinkage Coefficient (LRFD 5.4.2.3.3)**
157	**C. Creep Coefficient (LRFD 5.4.2.3.2)**

A. Input Variables

A1. Time Dependent Variables

Relative humidity..... $H = 75$

Age (days) of concrete when load is applied..... $T_0 = 1$

Age (days) of concrete deck when section becomes composite..... $T_1 = 120$

Age (days) used to determine long term losses..... $T_2 = 10000$

A2. Transformed Properties

Required thickness of deck slab..... $t_{slab} = 8\ in$

Effective slab width for interior beam..... $b_{eff.interior} = 96.0\ in$

Effective slab width for exterior beam..... $b_{eff.exterior} = 101.0\ in$

Superstructure beam type..... $BeamTypeTog = "IV"$

A3. Volume to Surface Area Ratios (Notional Thickness)

The volume and surface area are calculated for 1 ft. of length. The surface area only includes the area exposed to atmospheric drying. The volume and surface area of the deck are analyzed using the effective slab width for the interior beam.

Effective slab width..... $b_{eff} := b_{eff.interior}$

Volume of beam..... $Volume_{beam} = 5.5\ ft^3$

Volume of deck..... $Volume_{deck} = 5.3\ ft^3$

Volume of composite section..... $Volume = 10.8\ ft^3$

Surface area of beam..... $Surface_{beam} = 12.2\ ft^2$

Surface area of deck..... $Surface_{deck} = 15.7\ ft^2$

Surface area of composite section..... $Surface = 27.9\ ft^2$

The shrinkage coefficient uses the notional thickness of the composite section.....

$$h_{o.SH} := \frac{Volume}{Surface}$$

$$h_{o.SH} = 4.7\ in$$

The creep coefficient uses the notional thickness of the non-composite section, since the forces responsible for creep are initially applied to the non-composite section.....

$$h_{o.CR} := \frac{Volume_{beam}}{Surface_{beam}}$$

$$h_{o.CR} = 5.4\ in$$

B. Shrinkage Coefficient (LRFD 5.4.2.3.3)

Shrinkage can range from approximately zero for concrete continually immersed in water to greater than 0.0008 for concrete that is improperly cured. Several factors influence the shrinkage of concrete.

- Aggregate characteristics and proportions
- Average humidity at the bridge site
- W/C ratio
- Type of cure
- Volume to surface area ratio of member
- Duration of drying period

Shrinkage strain for moist-cured concretes without shrinkage-prone aggregates.....

$$\varepsilon_{sh} = -k_s \cdot k_h \cdot \left(\frac{t}{35.0 + t}\right) \cdot 0.51 \cdot 10^{-3}$$

Shrinkage strain for steam-cured concretes without shrinkage-prone aggregates.....

$$\varepsilon_{sh} = -k_s \cdot k_h \cdot \left(\frac{t}{55.0 + t}\right) \cdot 0.56 \cdot 10^{-3}$$

Factor for relative humidity.....

$$k_h := \begin{cases} \dfrac{140 - H}{70} & \text{if } H < 80 \\ \dfrac{3 \cdot (100 - H)}{70} & \text{if } H \geq 80 \end{cases}$$

$$k_h = 0.929$$

Factor for effects of the volume to surface ratio.....

$$k_s = \left(\frac{t}{\dfrac{26 \cdot e^{0.36 \cdot h_o} + t}{\dfrac{t}{45+t}}}\right) \cdot \left(\frac{1064 - 94 \cdot h_o}{923}\right)$$

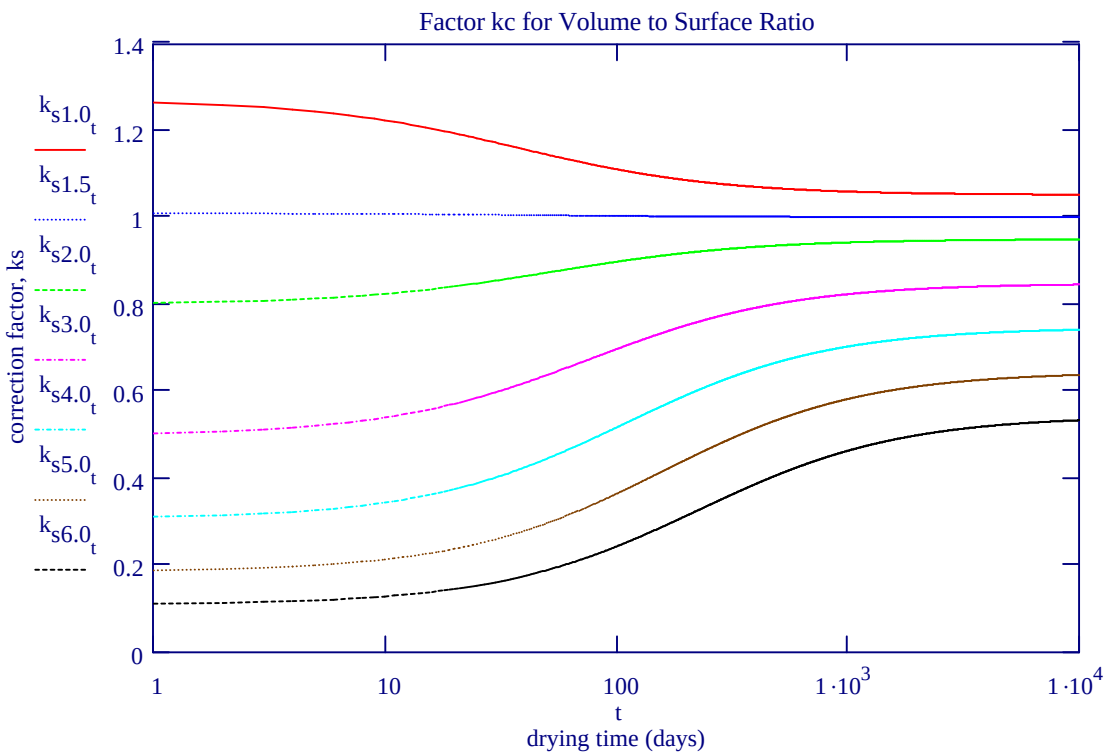

Using variables defined in this example and assuming moist-cured concrete,

Shrinkage strain..... $\varepsilon_{sh}(t) := k_{s_t} \cdot k_h \cdot \left(\frac{t}{35.0 + t}\right) \cdot 0.51 \cdot 10^{-3}$

Shrinkage strain on composite section at Day $T_1 = 120$ ..... $\varepsilon_{sh}(T_1) = 0.00032$

Shrinkage strain on composite section at Day $T_2 = 10000$ ..... $\varepsilon_{sh}(T_2) = 0.00063$

Shrinkage strain on composite section from Day $T_1 = 120$ to Day $T_2 = 10000$ ..... $\varepsilon_{SH} := \varepsilon_{sh}(T_2) - \varepsilon_{sh}(T_1)$

$\varepsilon_{SH} = 0.00032$

***Note**: Shrinkage and Creep [**LRFD 5.4.2.3**]*

Assumptions for shrinkage strain..... *0.0002 after 28 days*

0.0005 after one year

Based on these assumptions, at Day 120 the strain is 0.0002. At Day 10000, the shrinkage strain should be 0.0005. The amount of shrinkage strain from Day 120 to Day 10000 is 0.0003. which closely compares with the calculated value of 0.00032. For this example, the shrinkage strains calculated in this section are used for the remaining design.

C. Creep Coefficient (LRFD 5.4.2.3.2)

Creep is influenced by the same factors as shrinkage and also by the following factors:

- Magnitude and duration of stress
- Maturity of concrete at loading
- Temperature of concrete

For typical temperature ranges in bridges, temperature is not a factor in estimating creep.

Concrete shortening due to creep generally ranges from 1.5 to 4.0 times the initial elastic shortening, depending primarily on concrete maturity at loading.

Creep Coefficient

$$\Psi(t, t_i) = 3.5 \cdot k_c \cdot k_f \cdot \left(1.58 - \frac{H}{120}\right) \cdot (t_i)^{-0.118} \cdot \frac{(t - t_i)^{0.6}}{10.0 + (t - t_i)^{0.6}}$$

Factor for effect of concrete strength.....

$$k_f := \frac{1}{0.67 + \left(\frac{f_{c.beam}}{\frac{ksi}{9}}\right)}$$

$$k_f = 0.718$$

Factor for effect of volume to surface ratio.....

$$k_c = \left(\frac{t}{\frac{26 \cdot e^{0.36 \cdot h_o} + t}{\frac{t}{45+t}}}\right) \cdot \left(\frac{1.80 + 1.77 \cdot e^{-0.54 \cdot h_o}}{2.587}\right)$$

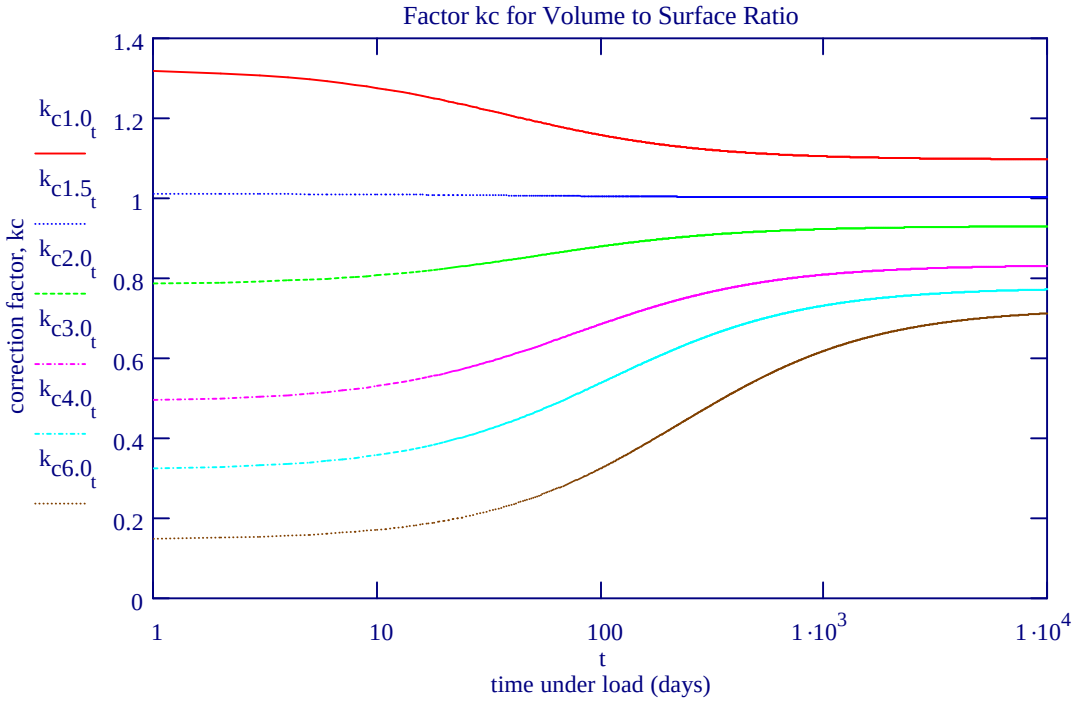

Using variables defined in this example,

Creep coefficient..... $\Psi(t, t_i) := 3.5 \cdot k_{c_t} \cdot k_f \cdot \left(1.58 - \frac{H}{120}\right) \cdot (t_i)^{-0.118} \cdot \frac{(t - t_i)^{0.6}}{10.0 + (t - t_i)^{0.6}}$

Creep coefficient on non-composite section from Day $T_0 = 1$ to Day $T_1 = 120$ ..... $\psi_{cr1} := \Psi(T_1, T_0)$

$\psi_{cr1} = 0.627$

Creep coefficient on non-composite section from Day $T_0 = 1$ to Day $T_2 = 10000$ ..... $\psi_{cr2} := \Psi(T_2, T_0)$

$\psi_{cr2} = 1.681$

Creep factor at Day T_1 ..... $C_{120} := 1 + \psi_{cr1}$

$C_{120} = 1.627$

Creep factor at Day T_2 ..... $C_{10000} := 1 + \psi_{cr2}$

$C_{10000} = 2.681$

Defined Units

Expansion Joint Design

References

Reference:F:\HDRDesignExamples\Ex1_PCBeam\209CRSH.mcd(R)

Description

This section provides the design of the bridge expansion joints.

Page Contents

Page	Contents
160	**LRFD Criteria**
160	**FDOT Criteria**
161	**A. Input Variables**
	A1. Bridge Geometry
	A2. Temperature Movement [SDG 6.3]
	A3. Expansion Joints [SDG 6.4]
	A4. Movement [6.4.2]
164	**B. Expansion Joint Design**
	B1. Movement from Creep, Shrinkage and Temperature (SDG 6.4.2)
	B2. Movement from Temperature (SDG 6.4.2)
	B3. Temperature Adjustment for Field Placement of Joint
	B4. Bearing Design Movement/Strain
166	**C. Design Summary**

LRFD Criteria

Uniform Temperature [3.12.2]

Superseded by SDG 2.7.2 and SDG 6.3.

Shrinkage and Creep [5.4.2.3]

Movement and Loads - General [14.4.1]

Bridge Joints [14.5]

FDOT Criteria

Uniform Temperature - Joints and Bearings [SDG 2.7.2]

Delete LRFD [3.12.2] and substitute in lieu thereof SDG Chapter 6.

Expansion Joints [SDG 6.4]

A. Input Variables

A1. Bridge Geometry

Overall bridge length..... $L_{bridge} = 180\,ft$

Bridge design span length..... $L_{span} = 90\,ft$

Skew angle..... $Skew = -30\,deg$

A2. Temperature Movement [SDG 6.3]

Structural Material of Superstructure	Temperature (Degrees Fahrenheit)			
	Mean	High	Low	Range
Concrete Only	70	95	45	50
Concrete Deck on Steel Girder	70	110	30	80
Steel Only	70	120	30	90

The temperature values for "Concrete Only" in the preceding table apply to this example.

Temperature mean..... $t_{mean} = 70\,°F$

Temperature high..... $t_{high} = 95\,°F$

Temperature low..... $t_{low} = 45\,°F$

Temperature rise..... $\Delta t_{rise} := t_{high} - t_{mean}$

$\Delta t_{rise} = 25\,°F$

Temperature fall..... $\Delta t_{fall} := t_{mean} - t_{low}$

$\Delta t_{fall} = 25\,°F$

Coefficient of thermal expansion **[LRFD 5.4.2.2]** for normal weight concrete..... $\alpha_t = 6 \times 10^{-6}\,\frac{1}{°F}$

A3. Expansion Joints [SDG 6.4]

Joint Type	Maximum Joint Width *
Poured Rubber	¾"
Silicone Seal	2"
Strip Seal	3"
Modular Joint	Unlimited
Finger Joint	Unlimited

*Joints in sidewalks must meet all requirements of Americans with Disabilities Act.

For new construction, use only the joint types listed in the preceding table. A typical joint for most prestressed beam bridges is the silicone seal.

Maximum joint width..... $W_{max} := 2 \cdot in$

Minimum joint width at 70° F..... $W_{min} := \frac{5}{8} \cdot in$

Proposed joint width at 70° F..... $W := 1 \cdot in$

A4. Movement [SDG 6.4.2]

Temperature

The movement along the beam due to temperature should be resolved along the axis of the expansion joint or skew.

Displacements normal to skew at top of bents

Temperature rise..... $\Delta z_{TempR} := \alpha_t \cdot \Delta t_{rise} \cdot \cos(|Skew|) \cdot L_{span}$

$\Delta z_{TempR} = 0.14\,in$

Temperature Fall..... $\Delta z_{TempF} := \alpha_t \cdot \Delta t_{fall} \cdot \cos(|Skew|) \cdot L_{span}$

$\Delta z_{TempF} = 0.14\,in$

Displacements parallel to skew at top of bents

Temperature rise..... $\Delta x_{TempR} := \alpha_t \cdot \Delta t_{rise} \cdot \sin(|Skew|) \cdot L_{span}$

$\Delta x_{TempR} = 0.08\,in$

Temperature Fall..... $\Delta x_{TempF} := \alpha_t \cdot \Delta t_{fall} \cdot (\sin(|Skew|) \cdot L_{span})$

$\Delta x_{TempF} = 0.08\,in$

For silicone seals, displacements parallel to the skew are not significant in most joint designs. For this example, these displacements are ignored.

Creep and Shrinkage

The following assumptions are used in this design example:

- Creep and Shrinkage prior to day 120 (casting of deck) is neglected for the expansion joint design.
- Creep [**LRFD 5.4.2.3**] is not considered at this time. After day 120, all beams are assumed to creep towards their centers. The slab will offer some restraint to this movement of the beam. The beam and slab interaction, combined with forces not being applied to the center of gravity for the composite section, is likely to produce longitudinal movements and rotations. For most prestressed beams designed as simple spans for dead and live load, these joint movements due to creep are ignored.

Shrinkage after day 120 is calculated using **LRFD 5.4.2.3**.

Creep strain..... $\varepsilon_{CR} := 0.$

Shrinkage strain..... $\varepsilon_{SH} = 0.00032$

Strain due to creep and shrinkage..... $\varepsilon_{CS} := \varepsilon_{CR} + \varepsilon_{SH}$

$\varepsilon_{CS} = 0.00032$

The movement along the beam due to creep and shrinkage should be resolved along the axis of the expansion joint or skew.

Displacements normal to skew at top of bents..... $\Delta z_{CS} := \varepsilon_{CS} \cdot \cos(|Skew|) \cdot L_{span}$

$\Delta z_{CS} = 0.30\,in$

Displacements parallel to skew at top of bents..... $\Delta x_{CS} := \varepsilon_{CS} \cdot \sin(|Skew|) \cdot L_{span}$

$\Delta x_{CS} = 0.17\,in$

For silicone seals, displacements parallel to the skew are not significant in most joint designs. For this example, these displacements are ignored.

B. Expansion Joint Design

For prestressed concrete structures, the movement is based on the greater of two cases:

- Movement from the combination of temperature fall, creep, and shrinkage
- Movement from factored effects of temperature

B1. Movement from Creep, Shrinkage and Temperature (SDG 6.4.2)

The combination of creep, shrinkage, and temperature fall tends to "open" the expansion joint.

Movement from the combination of temperature fall, creep, and shrinkage..... $\Delta z_{Temperature.Fall} = \Delta z_{temperature.fall} + \Delta z_{creep.shrinkage}$

Using variables defined in this example..... $\Delta_{CST} := \Delta z_{CS} + \Delta z_{TempF}$

$\Delta_{CST} = 0.44\,in$

Joint width from opening caused by creep, shrinkage, and temperature..... $W_{CSTopen} := W + \Delta_{CST}$

$W_{CSTopen} = 1.44\,in$

The joint width from opening should not exceed the maximum joint width.

$$CST_{Jt_Open} := \begin{cases} \text{"OK, joint width does not exceed maximum joint width"} & \text{if } W_{CSTopen} \le W_{max} \\ \text{"NG, joint width exceeds maximum joint width"} & \text{otherwise} \end{cases}$$

CST_{Jt_Open} = "OK, joint width does not exceed maximum joint width"

B2. Movement from Temperature (SDG 6.4.2)

Movement from factored effects of temperature rise

$$\Delta z_{rise.or.fall} = 1.15 \cdot \Delta z_{temperature.rise.or.fall}$$

Using variables defined in this example,

Joint width from opening caused by factored temperature fall..... $W_{Topen} := W + 1.15 \cdot \Delta z_{TempF}$

$W_{Topen} = 1.16\,in$

Joint width from closing caused by factored temperature rise..... $W_{Tclose} := W - 1.15 \cdot \Delta z_{TempR}$

$W_{Tclose} = 0.84\,in$

The joint width from opening should not exceed the maximum joint width.

$$Temperature_{Jt_Open} := \begin{cases} \text{"OK, joint width does not exceed maximum joint width"} & \text{if } W_{Topen} \le W_{max} \\ \text{"NG, joint width exceeds maximum joint width"} & \text{otherwise} \end{cases}$$

$Temperature_{Jt_Open}$ = "OK, joint width does not exceed maximum joint width"

The joint width from closing should not be less than the minimum joint width.

$$Temperature_{Jt_Close} := \begin{cases} \text{"OK, joint width is not less than minimum joint width"} & \text{if } W_{Tclose} \ge W_{min} \\ \text{"NG, joint width exceeds minimum joint width"} & \text{otherwise} \end{cases}$$

$Temperature_{Jt_Close}$ = "OK, joint width is not less than minimum joint width"

B3. Temperature Adjustment for Field Placement of Joint

For field temperatures other than 70° F, a temperature adjustment is provided. The adjustment is used during construction to obtain the desired joint width.....

$$T_{Adj} := \frac{\Delta z_{TempR}}{\Delta t_{rise}}$$

$$T_{Adj} = 0.0056 \frac{in}{°F}$$

B4. Bearing Design Movement/Strain

For the bearing pad design, the following strain due to temperature, creep and shrinkage will be utilized.....

$$\varepsilon_{CST} := \left(\varepsilon_{CR} + \varepsilon_{SH} + \alpha_t \cdot \Delta t_{fall}\right)$$

$$\varepsilon_{CST} = 0.00047$$

C. Design Summary

Joint width at 70°..... $W = 1\,in$

Joint width from opening caused by creep, shrinkage, and temperature..... $W_{CSTopen} = 1.44\,in$

CST_{Jt_Open} = "OK, joint width does not exceed maximum joint width" ..... $W_{max} = 2\,in$

Joint width from opening caused by factored temperature..... $W_{Topen} = 1.16\,in$

$Temperature_{Jt_Open}$ = "OK, joint width does not exceed maximum joint width" ..... $W_{max} = 2\,in$

Joint width from closing caused by factored temperature..... $W_{Tclose} = 0.84\,in$

$Temperature_{Jt_Close}$ = "OK, joint width is not less than minimum joint width" ..... $W_{min} = 0.625\,in$

Adjustment for field temperatures other than 70°..... $T_{Adj} = 0.0056\,\frac{in}{°F}$

Bearing pad design movement/strain..... $\varepsilon_{CST} = 0.00047$

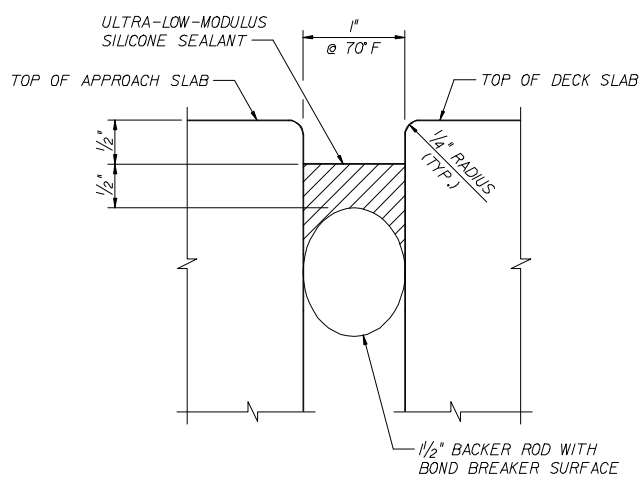

EXPANSION JOINT DETAIL

Defined Units

Composite Neoprene Bearing Pad Design

Reference

Reference:F:\HDRDesignExamples\Ex1_PCBeam\210ExpJt.mcd(R)

Description

This section provides the design of the bridge composite neoprene bearing pad. Only the interior beam at End bent 1 bearing pad is designed within this file.

For the design of bearing pads for any other beam type (exterior beam) and location (at pier), design is similar to methodology shown in this file.

Page Contents

Page	Contents
168	LRFD Criteria
168	FDOT Criteria
169	A. Input Variables
	A1. Bridge Geometry
	A2. Bearing Design Movement/Strain
	A3. Bearing Design Loads
171	B. Composite Bearing Pad Design Dimensions
172	C. Composite Bearing Pad Design [LRFD 14.7.5]
	C1. General [LRFD 14.7.5.1]
	C2. Material Properties [LRFD 14.7.5.2]
	C3. Compressive Stress [LRFD 14.7.5.3.2]
	C4. Compressive Deflections [LRFD 14.7.5.3.3]
	C5. Shear Deformations [LRFD 14.7.5.3.4]
	C6. Combined Compression and Rotations [LRFD 14.7.5.3.5]
	C7. Stability of Elastomeric Bearings [LRFD 14.7.5.3.6]
	C.8 Reinforcement [LRFD 14.7.5.3.7]
	C.9 Anchorage and Anchor Bolts [LRFD 14.8.3]
	C.10 Horizontal Force and Movement [LRFD 14.6.3.1]
183	D. DESIGN SUMMARY
	D1. Bearing Pad Properties
	D2. LRFD Checks (METHOD B)

LRFD Criteria

Uniform Temperature [LRFD 3.12.2]

Superseded by SDG 2.7.2 and SDG 6.3.

Movement and Loads - General [LRFD 14.4.1]

Specifies that "the influence of impact need not be included" in the design of bearings.

Movement and Loads - Design Requirements [LRFD 14.4.2]

Specifies 0.005 RAD as an allowance for uncertainties.

Steel-Reinforced Elastomeric Bearings - Method B [LRFD 14.7.5]

FDOT Criteria

Seismic Provisions - General [SDG 2.3.1]

Simple span concrete beam bridges are exempt from seismic design. Design for minimum seismic support length only.

Uniform Temperature - Joints and Bearings [SDG 2.7.2]

Delete LRFD [3.12.2] and substitute in lieu thereof SDG Chapter 6.

Vessel Collision - Design Methodology - Damage Permitted [SDG 2.11.4]

Ship impact on bearings is not considered in this example.

Temperature Movement [SDG 6.3]

Bearings [SDG 6.5]

Specifies design of Composite neoprene bearing pads in accordance with LRFD Method B.

A. Input Variables

A1. Bridge Geometry

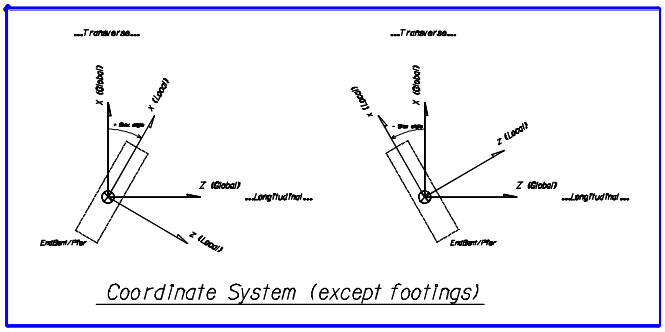

Bridge design span length..... $L_{span} = 90\,ft$

Skew angle..... $Skew = -30\,deg$

A2. Bearing Design Movement/Strain

For the bearing pad design, the following strain due to temperature, creep and shrinkage will be utilized..... $\varepsilon_{CST} = 0.00047$

A3. Bearing Pad Design Loads

The design of the interior and exterior beams follow the same procedures and concept as outlined in this design example. In order to minimize the calculations, only one beam type will be evaluated. Flexibility to evaluate an interior or exterior beam is given by changing the input values chosen below (see input options note).

DC dead loads..... $R_{DC} := V_{DC.BeamInt}(Support)$

$R_{DC} = 85.4\,kip$

DW dead loads..... $R_{DW} := V_{DW.BeamInt}(Support)$

$R_{DW} = 5.3\,kip$

Live Load Rotation ..... $\theta_{LL} := \theta_{LL.Int}$

$\theta_{LL} = 0.00174\,rad$

Live Load Reaction..... $R_{LL} := R_{LL.Int}$

$R_{LL} = 81.9\,kip$

***Note**: Input options.....*

$$\begin{pmatrix} V_{DC.BeamInt}(Support) \\ V_{DC.BeamExt}(Support) \\ V_{DW.BeamInt}(Support) \\ V_{DW.BeamExt}(Support) \\ \theta_{LL.Int} \\ \theta_{LL.Ext} \\ R_{LL.Int} \\ R_{LL.Ext} \end{pmatrix}$$

Service I Limit State Design Loads.

$Service1 = 1.0 \cdot DC + 1.0 \cdot DW + 1.0 \cdot LL$

Total Bearing Design Load..... $R_{BrgTotal} := 1.0 \cdot R_{DC} + 1.0 \cdot R_{DW} + 1.0 \cdot R_{LL}$

$R_{BrgTotal} = 172.6\,kip$

Live Load Bearing Design Load..... $R_{BrgLL} := 1.0 \cdot R_{LL}$

$R_{BrgLL} = 81.9\,kip$

Live Load Design Rotation.....

$\theta_{LL} = 0.0017\,rad$

B. Composite Bearing Pad Design Dimensions

Bearing pad size and dimensions

The dimensions of the bearing pad can be selected using *FDOT Construction Specifications, Section 932 - Non-Metallic Accessory Materials for Concrete Pavement and Concrete Structures.* Section 932-2.2.3 states that composite neoprene pads shall consist of alternate laminations of neoprene and hot-rolled steel sheets molded together as one unit. The pads should meet the following requirements:

- Outer metal laminations shall be 3/16 inch ..... $h_{se} := \frac{3}{16}\text{in}$
- Inner laminations shall be 14-gauge (2.0 mm)..... $h_{si} := 2 \cdot \text{mm}$ or $h_{si} = 0.0787\ \text{in}$
- Outer neoprene laminations shall be 1/4 inch..... $h_{re} := 0.25\text{in}$
- Inner neoprene laminations shall be of equal thicknesses
- Edges of steel laminates should be covered with minimum or 1/4 inch of elastomer

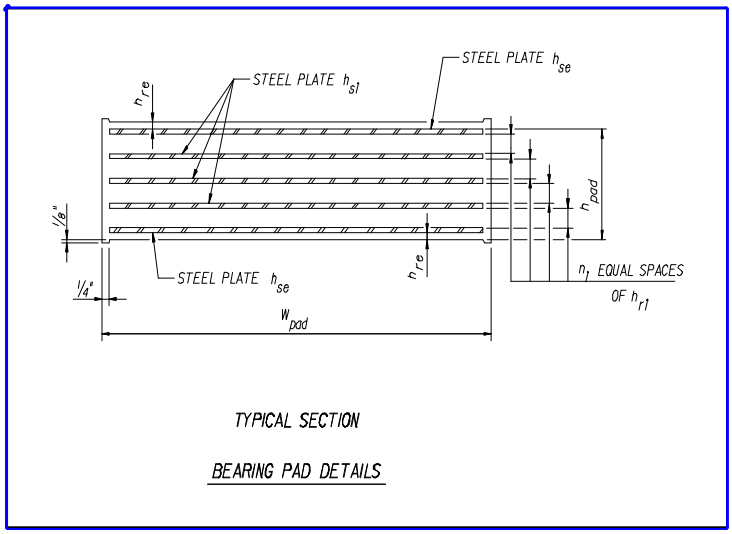

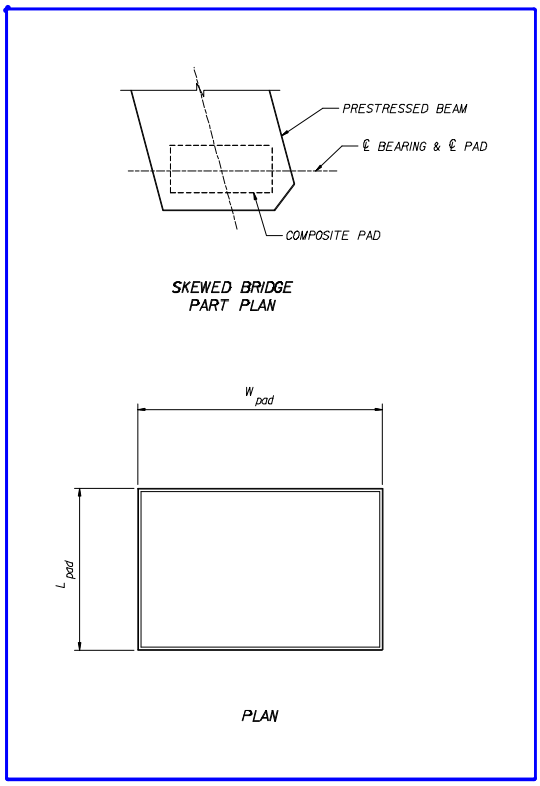

Length of bearing pad..... $L_{pad} := 12 \cdot \text{in}$

Width of bearing pad..... $W_{pad} := 17 \cdot \text{in}$

Height of bearing pad..... $h_{pad} := 2.5 \cdot \text{in}$

Number of external elastomer layers..... $n_e := 2$

Number of internal elastomer layers..... $n_i := 3$

C. Composite Bearing Pad Design [LRFD 14.7.5]

C1. General [LRFD 14.7.5.1]

Thickness of an internal elastomer layer.... $h_{ri} := \frac{h_{pad} - n_e \cdot (h_{re} + h_{se}) - (n_i - 1) \cdot h_{si}}{n_i}$

$h_{ri} = 0.489\,in$

The top and bottom cover layers shall be no thicker than 70 percent of the internal layers..... $h_{re} \le 0.7 \cdot h_{ri}$

$h_{re} = 0.25\,in$

$LRFD_{14.7.5.1} := \begin{cases} \text{"OK, Thickness of the external layers"} & \text{if } h_{re} \le 0.7 \cdot h_{ri} \\ \text{"NG, The external layer is too thick"} & \text{otherwise} \end{cases}$ where $0.7 \cdot h_{ri} = 0.34\,in$

$LRFD_{14.7.5.1} = \text{"OK, Thickness of the external layers"}$

Total elastomer thickness..... $h_{rt} := n_e \cdot h_{re} + n_i \cdot h_{ri}$

$h_{rt} = 1.968\,in$

Area of bearing pad..... $A_{pad} := L_{pad} \cdot W_{pad}$

$A_{pad} = 204\,in^2$

Shape factor..... $S := \frac{L_{pad} \cdot W_{pad}}{2 \cdot h_{ri} \cdot (L_{pad} + W_{pad})}$

$S = 7.2$

C2. Material Properties [LRFD 14.7.5.2]

LRFD specifies the shear modulus of the elastomer based on the durometer hardness. For Method B design, only Grades 50 and 60 hardness are applicable.

Elastomer durometer hardness..... $Grade := 60$

Corresponding lower limit for shear modulus..... $G_{min} := \begin{cases} 95 \cdot psi & \text{if } Grade = 50 \\ 130 \cdot psi & \text{if } Grade = 60 \end{cases}$

$G_{min} = 0.130\,ksi$

Corresponding upper limit for shear modulus..... $G_{max} := \begin{cases} 130 \cdot psi & \text{if } Grade = 50 \\ 200 \cdot psi & \text{if } Grade = 60 \end{cases}$

$G_{max} = 0.200\,ksi$

Creep deflection factor..... $\phi_{cr} := \begin{cases} 0.25 & \text{if } Grade = 50 \\ 0.35 & \text{if } Grade = 60 \end{cases}$

$\phi_{cr} = 0.35$

C3. Compressive Stress [LRFD 14.7.5.3.2]

Each elastomeric bearing layer shall satisfy the criteria for the average compressive stress at the service limit state. The criteria depends on whether or not the bearing is considered free or fixed against shear deformation. As a guideline, if the bridge superstructure has restraints against movements, such as shear blocks, dowels, fixity, etc., then the bearings are considered fixed against shear deformations. If no restraints are present, then the bearings are free to deform due to shear.

Actual service compressive stress due to the total load..... $\sigma_{s.actual} := \frac{R_{BrgTotal}}{A_{pad}}$

$\sigma_{s.actual} = 0.85\,ksi$

Actual service compressive stress due to live load..... $\sigma_{L.actual} := \frac{R_{BrgLL}}{A_{pad}}$

$\sigma_{L.actual} = 0.40\,ksi$

Superstructure Free for Shear

Allowable service compressive stress due to the total load..... $\sigma_s := \min(1.66 \cdot G_{min} \cdot S, 1.6 \cdot ksi)$

$\sigma_s = 1.55\,ksi$

Allowable service compressive stress due to live load..... $\sigma_L := 0.66 \cdot G_{min} \cdot S$

$\sigma_L = 0.62\,ksi$

LRFD allows the shear modulus value to be utilized as the one causing the worst effect. Therefore, the lower limit value will be used for this criteria. Re-writing and solving for the governing values:

The actual compressive stresses should be less than the allowable compressive stresses.

$LRFD_{14.7.5.3.2_1} := \begin{cases} \text{"OK, actual compressive stress for total load (free for shear)"} & \text{if } \sigma_{s.actual} \le \sigma_s \\ \text{"NG, actual compressive stress for total load (free for shear)"} & \text{otherwise} \end{cases}$

$LRFD_{14.7.5.3.2_1} = \text{"OK, actual compressive stress for total load (free for shear)"}$

$LRFD_{14.7.5.3.2_2} := \begin{cases} \text{"OK, Compressive stress for live load only (free for shear)"} & \text{if } \sigma_{L.actual} \le \sigma_L \\ \text{"NG, Compressive stress for live load only (free for shear)"} & \text{otherwise} \end{cases}$

$LRFD_{14.7.5.3.2_2} = \text{"OK, Compressive stress for live load only (free for shear)"}$

Superstructure Fixed for Shear

Allowable service compressive stress due to the total load..... $\sigma_s := \min(2.0 \cdot G_{min} \cdot S, 1.75 \cdot ksi)$

$\sigma_s = 1.75\,ksi$

Allowable service compressive stress due to live load..... $\sigma_L := 1.00 \cdot G_{min} \cdot S$

$\sigma_L = 0.93\,ksi$

The actual compressive stresses should be less than the allowable compressive stresses.

$$LRFD_{14.7.5.3.2_3} := \begin{cases} \text{"OK, Compressive stress for total load (fixed for shear)"} & \text{if } \sigma_{s.actual} \le \sigma_s \\ \text{"NG, Compressive stress for total load (fixed for shear)"} & \text{otherwise} \end{cases}$$

$LRFD_{14.7.5.3.2_3}$ = "OK, Compressive stress for total load (fixed for shear)"

$$LRFD_{14.7.5.3.2_4} := \begin{cases} \text{"OK, Compressive stress for live load only (fixed for shear)"} & \text{if } \sigma_{L.actual} \le \sigma_L \\ \text{"NG, Compressive stress for live load only (fixed for shear)"} & \text{otherwise} \end{cases}$$

$LRFD_{14.7.5.3.2_4}$ = "OK, Compressive stress for live load only (fixed for shear)"

C4. Compressive Deflections [LRFD 14.7.5.3.3]

An overly flexible bearing can introduce a step at the deck joint on the riding surface. As traffic passes over this step, additional impact loading is applied to the bridge. The step can also damage the deck joints and seals. LRFD suggests limiting the relative deflections across a joint due to instantaneous loads.

Limiting the relative deflections..... $\delta_{max} := 0.125 \cdot in$

The instantaneous deflections are calculated using the compressive strain. This compressive strain represents the amount of deflection that the thickest layer of the neoprene bearing will undergo due to the instantaneous loads. LRFD provides compressive strain charts based on the durometer hardness of the bearing pad:

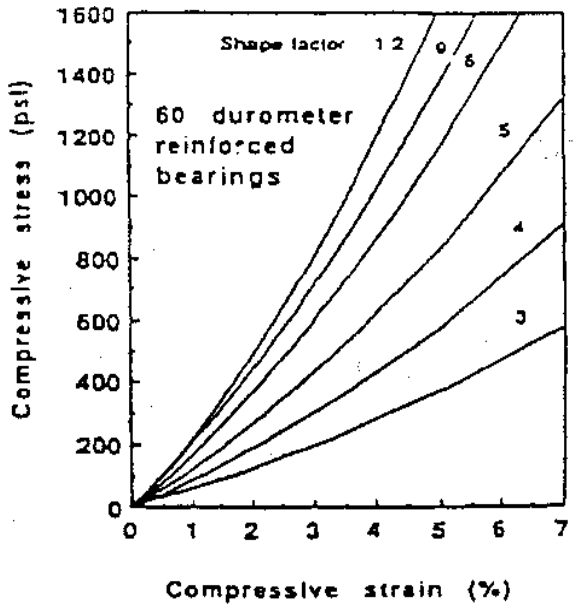

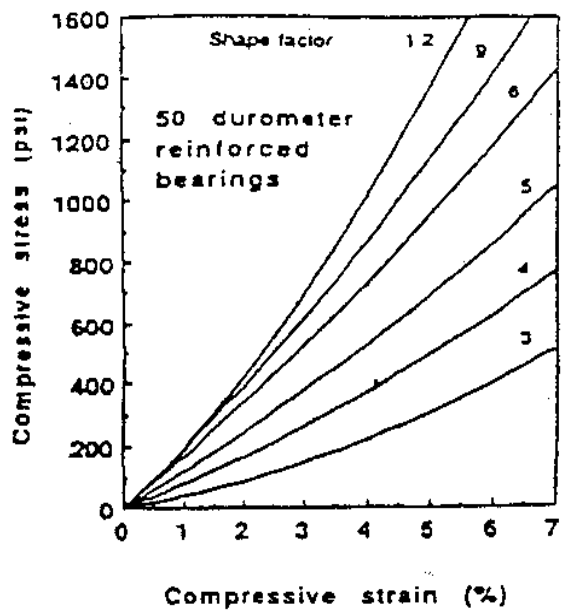

Required information to select compressive strain from chart:

Bearing durometer..... Grade = 60

Actual compressive stress due to live load..... $\sigma_{L.actual} = 0.402\,ksi$

Shape factor..... $S = 7.2$

Compressive strain from chart..... $\varepsilon_i := 0.02$

Instantaneous compressive deflection due to live load..... $\delta_{il} = \Sigma\varepsilon_i \cdot h_{ri}$

Substituting and re-writing..... $\delta_{il} := n_e \cdot (\varepsilon_i \cdot h_{re}) + n_i \cdot (\varepsilon_i \cdot h_{ri})$

$\delta_{il} = 0.039\,in$

LRFD suggests adding the effects of creep on the elastomer for the instantaneous deflections.

Long-term deflection due to instantaneous loads..... $\delta_c := \delta_{il} \cdot (1 + \phi_{cr})$

$\delta_c = 0.053\,in$

The long-term deflection due to instantaneous loads should not exceed the maximum deflection.

$$LRFD_{14.7.5.3.3} := \begin{cases} \text{"OK, long-term compressive deflection less than maximum deflection"} & \text{if } \delta_c < \delta_{max} \\ \text{"NG, long-term compressive deflection exceeds maximum deflection"} & \text{otherwise} \end{cases}$$

$LRFD_{14.7.5.3.3}$ = "OK, long-term compressive deflection less than maximum deflection"

C5. Shear Deformations [LRFD 14.7.5.3.4]

Concrete shrinkage, thermal movements, and beam shortening cause shear deformations in the bearing pads.

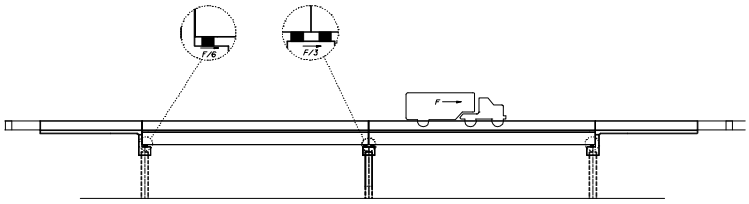

For a two-span bridge with equal span lengths and constant pier heights, the assumed center of movement is the center support (Pier 2). From this assumption, the shear deformations at Pier 2 are negligible, so all movement occurs at the end bents.

Shear deformations along the beam line for creep, shrinkage, and temperature..... $\Delta_s := \varepsilon_{CST} \cdot L_{span}$

$\Delta_s = 0.506\,\text{in}$

The bearing pad is parallel to the skew, so the movement along the beam needs to be resolved along the axis of the pads.

Longitudinal shear deformation..... $\Delta_{sz} := \Delta_s \cdot \cos(|Skew|)$

$\Delta_{sz} = 0.439\,\text{in}$

Transverse shear deformation..... $\Delta_{sx} := \Delta_s \cdot \sin(|Skew|)$

$\Delta_{sx} = 0.253\,\text{in}$

Required total elastomer thickness..... $h_{rt.req} := 2 \cdot \Delta_s$

$h_{rt.req} = 1.013\,\text{in}$

The total elastomer thickness should be greater than the required total elastomer thickness.

$$LRFD_{14.7.5.3.4} := \begin{cases} \text{"OK, Elastomer thickness for shear deformation"} & \text{if } h_{rt} \geq h_{rt.req} \\ \text{"NG, Elastomer thickness for shear deformation"} & \text{otherwise} \end{cases}$$

$LRFD_{14.7.5.3.4} = \text{"OK, Elastomer thickness for shear deformation"}$

C6. Combined Compression and Rotations [LRFD 14.7.5.3.5]

Bearing Pad Rotations

Previous FDOT procedures provided standard pad sizes to use with various beam types. The introduction of Method B equations established a more stringent design for the bearing pads, particularly between the interaction of rotation and compression. The FDOT standard pad sizes no longer satisfy the Method B criteria. Specifically, the new criteria was causing the bearing pads to be taller to satisfy rotational requirements, which introduced problems with the interaction of combined compression and rotation (uplift criteria).

The result is that a more "detailed" calculation for displacements and rotations are now required. For example:

Total Rotation

Grade Rotation

Live Load Rotation

$$\theta_{total} = \underbrace{(-0.03231)}_{\text{Rotation Due to Prestress}} + \underbrace{(0.01394 + 0.01062 + 0.00069 + 0.00066 + 0.00067)}_{\text{Dead Load Rotation}} + \overbrace{(0.00192)}^{\text{Live Load Rotation}} +/- (0.00763)$$

= 0.003819 (+ Grade Rotation)

or = -0.011437 (- Grade Rotation)

Plus 0.005 rad (AASHTO LRFD 14.4.2) = 0.005 rad

Maximum Rotation = 0.016437 rad

The LRFD criteria for uplift is predominantly concerned with pads bonded to the substructure and girder. Since FDOT does not require bonding, the uplift criteria of **LRFD 14.7.5.3.5-1** need not be satisfied. Depending on the size of pads required by the Method B equations, the calculations for rotation can either be simplified or detailed.

Bearing pad rotations typically consist of the following:

- Prestress rotation
- Dead load rotations (beam, slab, barrier, FWS, SIP forms)
- Grade rotations (no grade adjustments utilized, eg. plates, beam notches, etc.)
- Construction tolerances on pedestals and piers (usually included in the construction tolerances factor

If the bearing pad dimensions required by the Method B equations are considered reasonable (using engineering judgement and/or experience), then the rotations due to prestress, dead load, and grade are ignored. This reasoning assumes the rotations are negligible or the combined effects are beneficial, which is also ignored. If the designer does not feel the bearing pad dimensions are reasonable, these rotations need to be calculated.

Rotation due to prestress, dead load, and grade..... $\theta_{DC} := 0.0 \cdot rad$ *(**Note**: For this design example, these rotations are not calculated)*

Rotation due to construction tolerances and uncertainties [**LRFD 14.4.2**]..... $\theta_{tol} := 0.005 \cdot rad$

Rotations due to live loads.....

$\theta_{LL} = 0.0017\,rad$

Total rotations along the beam..... $\theta_s := \theta_{DC} + \theta_{LL} + \theta_{tol}$

$\theta_s = 0.0067\,rad$

Bearing pads are parallel to the skew, so rotation along the beam needs to be resolved along the axis of the pads.

Longitudinal rotation..... $\theta_{sx} := \theta_s \cdot \cos(|Skew|)$

$\theta_{sx} = 0.0058\,rad$

Transverse rotation..... $\theta_{sz} := \theta_s \cdot \sin(|Skew|)$

$\theta_{sz} = 0.0034\,rad$

Uplift, Compression and Rotation Requirement

The bearing pad design requires a balance between the stiffness required to support large compressive loads and the flexibility needed to accommodate translation and rotation. LRFD requirements for allowable stresses and stability provide the balance between stiffness and flexibility. LRFD states that "*Bearings shall be designed so that uplift does not occur under any combination of loads and corresponding location*." However, bearings normally used in FDOT projects are unbonded, so uplift can occur. LRFD also presents concerns for strain reversal in the elastomer, which is not applicable for unbonded bearings.

Actual compressive stress at service limit state due to the total load..... $\sigma_{s.actual} := \frac{R_{BrgTotal}}{A_{pad}}$

$\sigma_{s.actual} = 0.846\,ksi$

Rectangular bearings must satisfy uplift requirements in **LRFD 14.7.5.3.5-1**. ..... $\sigma_s > 1.0 \cdot G \cdot S \cdot \left(\frac{\theta_s}{n}\right) \cdot \left(\frac{B}{h_{ri}}\right)^2$

n may be increased by one-half for each exterior layer of elastomer with a thickness more than one-half the thickness of an interior layer..... $n := if(h_{re} > 0.5 \cdot h_{ri}, n_i + 0.5 \cdot n_e, n_i)$

$n = 4$

Using variables defined in this example and resolving into axis of bearing pad,

Minimum compressive stress for uplift in longitudinal direction..... $\sigma_{sz} := 1.0 \cdot G_{max} \cdot S \cdot \left(\frac{\theta_{sx}}{n}\right) \cdot \left(\frac{W_{pad}}{h_{ri}}\right)^2$

$\sigma_{sz} = 2.53\,ksi$

Minimum compressive stress for uplift in transverse direction.....

$$\sigma_{sx} := 1.0 \cdot G_{max} \cdot S \cdot \left(\frac{\theta_{sz}}{n}\right) \cdot \left(\frac{L_{pad}}{h_{ri}}\right)^2$$

$$\sigma_{sx} = 0.73\,\text{ksi}$$

The actual compressive stress should be greater than the minimum compressive stress.

$$LRFD_{14.7.5.3.5_1} := \begin{cases} \text{"OK, no uplift for bonded pad"} & \text{if } \sigma_{s.actual} > \sigma_{sz} \wedge \sigma_{s.actual} > \sigma_{sx} \\ \text{"N/A, FDOT unbonded pad: separation, but no tension on elastomer"} & \text{otherwise} \end{cases}$$

$LRFD_{14.7.5.3.5_1}$ = "N/A, FDOT unbonded pad: separation, but no tension on elastomer"

Rectangular bearings free for shear deformation must also satisfy **LRFD 14.7.5.3.5-2**.....

$$\sigma_s < 1.875 \cdot G \cdot S \cdot \left[1 - 0.200 \cdot \left(\frac{\theta_s}{n}\right) \cdot \left(\frac{B}{h_{ri}}\right)^2\right]$$

Using variables defined in this example and resolving into axis of bearing pad,

Maximum compressive stress for uplift in longitudinal direction (free for shear).....

$$\sigma_{sz} := 1.875 \cdot G_{min} \cdot S \cdot \left[1 - 0.200 \cdot \left(\frac{\theta_{sx}}{n}\right) \cdot \left(\frac{W_{pad}}{h_{ri}}\right)^2\right]$$

$$\sigma_{sz} = 1.13\,\text{ksi}$$

Maximum compressive stress for uplift in transverse direction (free for shear).....

$$\sigma_{sx} := 1.875 \cdot G_{min} \cdot S \cdot \left[1 - 0.200 \cdot \left(\frac{\theta_{sz}}{n}\right) \cdot \left(\frac{L_{pad}}{h_{ri}}\right)^2\right]$$

$$\sigma_{sx} = 1.57\,\text{ksi}$$

The actual compressive stress should be less than the maximum compressive stress.

$$LRFD_{14.7.5.3.5_2} := \begin{cases} \text{"OK, compression and rotation (free for shear)"} & \text{if } \sigma_{s.actual} < \sigma_{sz} \wedge \sigma_{s.actual} < \sigma_{sx} \\ \text{"NG, combined compression and rotation (free for shear)"} & \text{otherwise} \end{cases}$$

$LRFD_{14.7.5.3.5_2}$ = "OK, compression and rotation (free for shear)"

Rectangular bearings fixed against shear deformation must also satisfy **LRFD 14.7.5.3.5-3**.....

$$\sigma_s < 2.25 \cdot G \cdot S \cdot \left[1 - 0.167 \cdot \left(\frac{\theta_s}{n}\right) \cdot \left(\frac{B}{h_{ri}}\right)^2\right]$$

Using variables defined in this example and resolving into axis of bearing pad,

Maximum compressive stress for uplift in longitudinal direction (fixed against shear).

$$\sigma_{sz} := 2.25 \cdot G_{min} \cdot S \cdot \left[1 - 0.167 \cdot \left(\frac{\theta_{sx}}{n}\right) \cdot \left(\frac{W_{pad}}{h_{ri}}\right)^2\right]$$

$$\sigma_{sz} = 1.48\,\text{ksi}$$

Maximum compressive stress for uplift in transverse direction (fixed against shear)...

$$\sigma_{sx} := 2.25 \cdot G_{min} \cdot S \cdot \left[1 - 0.167 \cdot \left(\frac{\theta_{sz}}{n} \right) \cdot \left(\frac{L_{pad}}{h_{ri}} \right)^2 \right]$$

$$\sigma_{sx} = 1.93\,\text{ksi}$$

The actual compressive stress should be less than the maximum compressive stress.

$$LRFD_{14.7.5.3.5_3} := \begin{cases} \text{"OK, compression and rotation (fixed for shear)"} & \text{if } \sigma_{s.actual} < \sigma_{sz} \wedge \sigma_{s.actual} < \sigma_{sx} \\ \text{"NG, combined compression and rotation (fixed for shear)"} & \text{otherwise} \end{cases}$$

$LRFD_{14.7.5.3.5_3}$ = "OK, compression and rotation (fixed for shear)"

C7. Stability of Elastomeric Bearings [LRFD 14.7.5.3.6]

The bearing is considered stable and no further stability checks are necessary if the requirements of **LRFD 14.7.5.3.6** are satisfied.

where $2 \cdot A \le B$

therefore.....

$$A := \frac{1.92 \cdot \left(\frac{h_{rt}}{L_{pad}} \right)}{\sqrt{1 + \frac{2.0 \cdot L_{pad}}{W_{pad}}}}$$

$$A = 0.2$$

and.....

$$B := \frac{2.67}{(S + 2.0) \cdot \left(1 + \frac{L_{pad}}{4.0 \cdot W_{pad}} \right)}$$

$$B = 0.25$$

Check the stability requirement

$$LRFD_{14.7.5.3.6_1} := \begin{cases} \text{"OK, stability requirement met"} & \text{if } 2 \cdot A \le B \\ \text{"NG, further checks for stability are needed"} & \text{otherwise} \end{cases}$$

$LRFD_{14.7.5.3.6_1}$ = "NG, further checks for stability are needed"

For rectangular bearings not satisfying $LRFD_{14.7.5.3.6_1}$, the compressive stress due to the total load shall satisfy either of the following:

Superstructure Free for Shear

The following equation (**LRFD 14.7.5.3.6-4**) corresponds to sidesway buckling and applies to bridges in which the deck is free to translate horizontally.....

$$\sigma_{s.actual} \le \frac{G \cdot S}{2 \cdot A - B}$$

$$\sigma_{s.actual} = 0.846\,\text{ksi}$$

Re-writing and solving for the governing value

where $\frac{G_{min} \cdot S}{2 \cdot A - B} = 5.898\,ksi$

$$LRFD_{14.7.5.3.6_4} := \begin{cases} \text{"OK, stability (free for shear)"} & \text{if } \sigma_{s.actual} \le \frac{G_{min} \cdot S}{2 \cdot A - B} \wedge 2 \cdot A > B \\ \text{"NG, stability not satisfied (free for shear)"} & \text{otherwise} \end{cases}$$

$LRFD_{14.7.5.3.6_4}$ = "OK, stability (free for shear)"

Superstructure Fixed for Shear

If one point on the bridge is fixed against horizontal movement, the sidesway buckling mode is not possible and the following equation (**LRFD 14.7.5.3.6-5**) should be used.....

$$\sigma_{s.actual} \le \frac{G \cdot S}{A - B}$$

$\sigma_{s.actual} = 0.846\,ksi$

Re-writing and solving for the governing value:

where $\frac{G_{min} \cdot S}{A - B} = -21.128\,ksi$

$$LRFD_{14.7.5.3.6_5} := \begin{cases} \text{"OK, Stability-Deck Fixed to move"} & \text{if } \sigma_{s.actual} \le \frac{G_{min} \cdot S}{A - B} \wedge 2 \cdot A > B \\ \text{"NG, Stability not satisfied (fixed for shear)"} & \text{otherwise} \end{cases}$$

$LRFD_{14.7.5.3.6_5}$ = "NG, Stability not satisfied (fixed for shear)"

C.8 Reinforcement [LRFD 14.7.5.3.7]

The thickness of the steel reinforcement shall satisfy the following requirements at the service and fatigue limit states. The fatigue connection is assumed in detail category A.

Yield stress of Grade 36 reinforcement..... $F_y := 36 \cdot ksi$

Constant amplitude fatigue threshold for category A **LRFD Table 6.6.1.2.5-3**..... $\Delta F_{TH} := 24 \cdot ksi$

The thickest elastomer layer is the internal layer, since the external layers cannot exceed 70% of internal layer thickness..... $h_{max} := h_{ri}$

$h_{max} = 0.489\,in$

Actual thickness of steel laminate.....

$h_{si} = 0.079\,in$

Required thickness of steel laminate at the service limit state.....

$$h_{s1} := \frac{3 \cdot h_{max} \cdot \sigma_{s.actual}}{F_y}$$

$h_{s1} = 0.03\,in$

Required thickness of steel laminate at the fatigue limit state:

Actual compressive stress due to live load.....

$$\sigma_L := \frac{R_{BrgLL}}{A_{pad}}$$

$\sigma_L = 0.402\,ksi$

Required thickness of steel laminate....

$$h_{s2} := \frac{2 \cdot h_{max} \cdot \sigma_L}{\Delta F_{TH}}$$

$h_{s2} = 0.02\,in$

If holes exist in the reinforcement, the minimum thickness shall be increased by a factor equal to twice the gross width divided by the net width.

Check the LRFD criteria

$$LRFD_{14.7.5.3.7} := \begin{cases} \text{"OK, Reinforcing Steel plate thickness"} & \text{if } h_{si} \geq \max(h_{s1}, h_{s2}) \\ \text{"NG, Reinforcing Steel layer thickness not adequate"} & \text{otherwise} \end{cases}$$

$LRFD_{14.7.5.3.7} = \text{"OK, Reinforcing Steel plate thickness"}$

C9. Anchorage and Anchor Bolts [LRFD 14.8.3]

LRFD states that horizontal forces may be induced by deformation the flexible element of the bearing. Bearings shall be anchored securely to the support to prevent their moving out of place during construction or the service life of the bridge. Elastomeric bearings may be left without anchorage if adequate friction is available.

A design coefficient of friction of 0.2 may be assumed between elastomer and clean concrete or steel.

Coefficient of friction..... $\mu := 0.2$

For completeness, this check is mentioned but will not be shown in this design example.

C10. Horizontal Force and Movement [LRFD 14.6.3.1]

The engineer shall determine the number of bearings required to resist the loads with consideration of the potential for unequal participation due to tolerances, unintended misalignments, the capacity of the individual bearings, and the skew.

For completeness, this check is mentioned but will not be shown in this design example.

D. DESIGN SUMMARY

D1. Bearing Pad Properties

Durometer hardness.....	Grade = 60	Thickness of external steel plates.....	$h_{se} = 0.188\,in$
Length of bearing pad.....	$L_{pad} = 12\,in$	Thickness of internal steel plates.....	$h_{si} = 0.079\,in$
Width of bearing pad.....	$W_{pad} = 17\,in$	Number of external elastomer layers.....	$n_e = 2$
Height of bearing pad.....	$h_{pad} = 2.5\,in$	Number of internal elastomer layers.....	$n_i = 3$
		Thickness of external elastomer layer.....	$h_{re} = 0.25\,in$
		Thickness of internal elastomer layers.....	$h_{ri} = 0.489\,in$

D2. LRFD Checks (Method B)

$LRFD_{14.7.5.1}$ = "OK, Thickness of the external layers"

$LRFD_{14.7.5.3.3}$ = "OK, long-term compressive deflection less than maximum deflection"

$LRFD_{14.7.5.3.4}$ = "OK, Elastomer thickness for shear deformation"

$LRFD_{14.7.5.3.5_1}$ = "N/A, FDOT unbonded pad: separation, but no tension on elastomer"

$LRFD_{14.7.5.3.7}$ = "OK, Reinforcing Steel plate thickness"

Satisfy the requirements for either of the applicable sections:

- **Superstructure Free for Shear**

  $LRFD_{14.7.5.3.2_1}$ = "OK, actual compressive stress for total load (free for shear)"

  $LRFD_{14.7.5.3.2_2}$ = "OK, Compressive stress for live load only (free for shear)"

  $LRFD_{14.7.5.3.5_2}$ = "OK, compression and rotation (free for shear)"

  $LRFD_{14.7.5.3.6_1}$ = "NG, further checks for stability are needed" *(**Note**: OK if 14.7.5.6_4 is satisfied)*

  $LRFD_{14.7.5.3.6_4}$ = "OK, stability (free for shear)"

- **Superstructure Fixed for Shear**

  $LRFD_{14.7.5.3.2_3}$ = "OK, Compressive stress for total load (fixed for shear)"

  $LRFD_{14.7.5.3.2_4}$ = "OK, Compressive stress for live load only (fixed for shear)"

  $LRFD_{14.7.5.3.5_3}$ = "OK, compression and rotation (fixed for shear)"

  $LRFD_{14.7.5.3.6_1}$ = "NG, further checks for stability are needed" *(**Note**: OK if 14.7.5.6_5 is satisfied)*

  $LRFD_{14.7.5.3.6_5}$ = "NG, Stability not satisfied (fixed for shear)"

Defined Units

Dead Loads

Reference

Reference:F:\HDRDesignExamples\Ex1_PCBeam\211BrgPad.mcd(R)

Description

This section provides the design dead loads applied to the substructure from the superstructure. The self-weight of the substructure is generated by the analysis program for the substructure model.

Page Contents

185 **A. General Criteria**

- **A1. End Bent Geometry**
- **A2. Pier Geometry**
- **A3. Footing Geometry**
- **A4. Pile Geometry**

187 **B. Dead Loads (DC, DW)**

- **B1. Beam Dead loads**
- **B2. End Bent Dead loads**
- **B3. Pier Dead loads**
- **B4. End Bent and Pier Dead load (DC, DW) Summary**

A. General Criteria

A1. End Bent Geometry

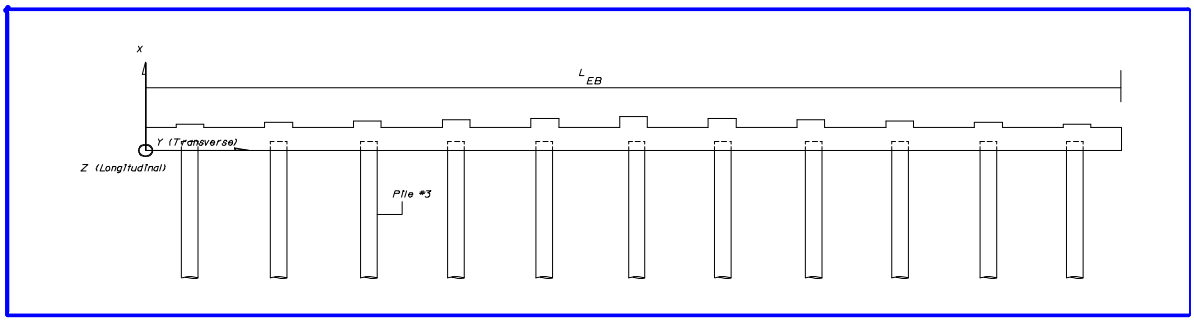

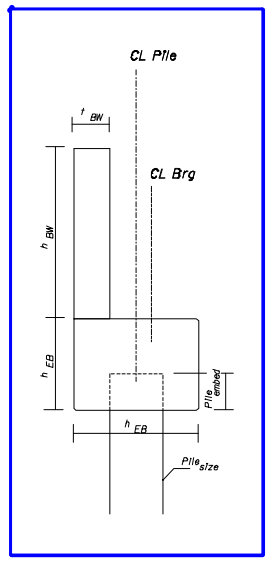

*(**Note**: End bent back wall not shown)*

Depth of end bent cap.....	h_{EB} = 2.5 ft
Width of end bent cap.....	b_{EB} = 3.5 ft
Length of end bent cap.....	L_{EB} = 101.614 ft
Height of back wall.....	h_{BW} = 5 ft
Backwall design width.....	L_{BW} = 1 ft
Thickness of back wall.....	t_{BW} = 1 ft

A2. Pier Geometry

A model of the substructure has been created utilizing LARSA. The model will have the loads applied at the pedestals from the superstructure. In addition, it will generate it's own self-weight based on the following member properties of the pier:

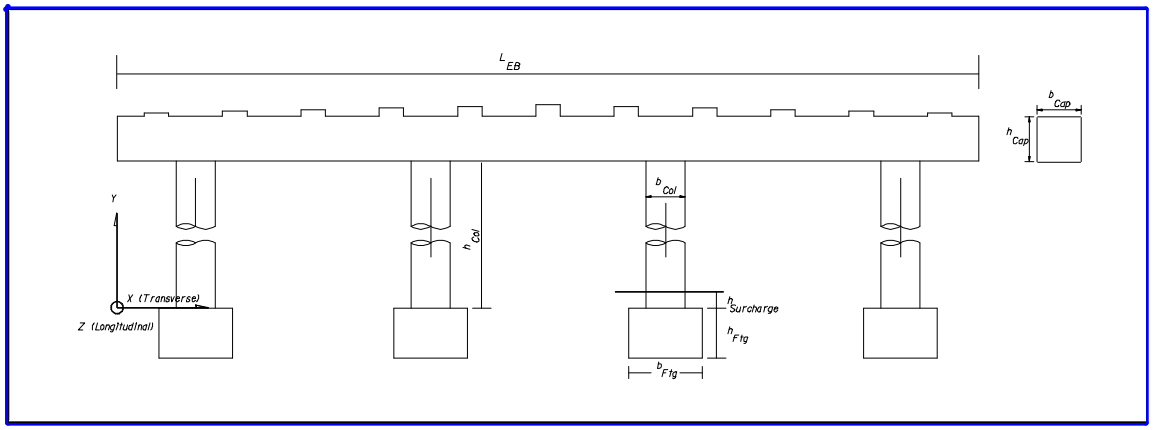

Depth of pier cap..... $h_{Cap} = 4.5\ ft$

Width of pier cap..... $b_{Cap} = 4.5\ ft$

Length of pier cap..... $L_{Cap} = 101.614\ ft$

Height of pier column..... $h_{Col} = 14\ ft$

Column diameter..... $b_{Col} = 4\ ft$

Number of columns..... $n_{Col} = 4$

Surcharge..... $h_{Surcharge} = 2\ ft$

Height of footing..... $h_{Ftg} = 4\ ft$

Width of footing..... $b_{Ftg} = 7.5\ ft$

Length of footing..... $L_{Ftg} = 7.5\ ft$

A4. Pile Geometry

Pile Embedment Depth..... $Pile_{embed} = 1\ ft$

Pile Size..... $Pile_{size} = 18\ in$

B. Dead Loads (DC, DW)

B1. Beam Dead Loads

The dead loads of the superstructure (moment and shears) were previously computed utilizing the beam design length, $L_{design} = 88.167\,ft$ (see section 2.01 Dead Loads). For reactions on the pier, the reactions should be computed based on the span length, $L_{span} = 90.0\,ft$. Conservatively, we will adjust the loads as follows:

Modification factors for span loads..... $\kappa_1 := \frac{L_{span}}{L_{design}}$

$\kappa_1 = 1.021$

DC load at end bent for interior beam..... $P_{DC.BeamInt} := \kappa_1 \cdot V_{DC.BeamInt}(Support)$

$P_{DC.BeamInt} = 87.1\,kip$

DC load at end bent for exterior beam..... $P_{DC.BeamExt} := \kappa_1 \cdot V_{DC.BeamExt}(Support)$

$P_{DC.BeamExt} = 91.8\,kip$

DW load at end bent for interior beam..... $P_{DW.BeamInt} := \kappa_1 \cdot V_{DW.BeamInt}(Support)$

$P_{DW.BeamInt} = 5.4\,kip$

DW load at end bent for exterior beam..... $P_{DW.BeamExt} := \kappa_1 \cdot V_{DW.BeamExt}(Support)$

$P_{DW.BeamExt} = 4.7\,kip$

B2. End Bent Dead loads

DC load at end bent for interior beam..... $P_{DC.EndbentInt} := P_{DC.BeamInt}$

$P_{DC.EndbentInt} = 87.1\,kip$

DC load at end bent for exterior beam..... $P_{DC.EndbentExt} := P_{DC.BeamExt}$

$P_{DC.EndbentExt} = 91.8\,kip$

DW load at end bent for interior beam..... $P_{DW.EndbentInt} := P_{DW.BeamInt}$

$P_{DW.EndbentInt} = 5.4\,kip$

DW load at end bent for exterior beam..... $P_{DW.EndbentExt} := P_{DW.BeamExt}$

$P_{DW.EndbentExt} = 4.7\,kip$

B3. Pier Dead Loads

Dead load at pier for interior beam..... $P_{DC.PierInt} := 2\left(P_{DC.BeamInt}\right)$

$P_{DC.PierInt} = 174.3\,kip$

Dead load at pier for exterior beam..... $P_{DC.PierExt} := 2(P_{DC.BeamExt})$

$P_{DC.PierExt} = 183.6\,kip$

Dead load at pier for interior beam..... $P_{DW.PierInt} := 2(P_{DW.BeamInt})$

$P_{DW.PierInt} = 10.8\,kip$

Dead load at pier for exterior beam..... $P_{DW.PierExt} := 2(P_{DW.BeamExt})$

$P_{DW.PierExt} = 9.4\,kip$

B4. End Bent and Pier Dead Load Summary

End Bent Beam Reactions

UNFACTORED BEAM REACTIONS AT END BENTS						
	DC Loads (kip)			DW Loads (kip)		
Beam	x	y	z	x	y	z
1	0.0	-91.8	0.0	0.0	-5.4	0.0
2	0.0	-87.1	0.0	0.0	-4.7	0.0
3	0.0	-87.1	0.0	0.0	-4.7	0.0
4	0.0	-87.1	0.0	0.0	-4.7	0.0
5	0.0	-87.1	0.0	0.0	-4.7	0.0
6	0.0	-87.1	0.0	0.0	-4.7	0.0
7	0.0	-87.1	0.0	0.0	-4.7	0.0
8	0.0	-87.1	0.0	0.0	-4.7	0.0
9	0.0	-87.1	0.0	0.0	-4.7	0.0
10	0.0	-87.1	0.0	0.0	-4.7	0.0
11	0.0	-91.8	0.0	0.0	-5.4	0.0

Pier Beam Reactions

UNFACTORED BEAM REACTIONS AT PIER						
	DC Loads (kip)			DW Loads (kip)		
Beam	x	y	z	x	y	z
1	0.0	-183.6	0.0	0.0	-10.8	0.0
2	0.0	-174.3	0.0	0.0	-9.4	0.0
3	0.0	-174.3	0.0	0.0	-9.4	0.0
4	0.0	-174.3	0.0	0.0	-9.4	0.0
5	0.0	-174.3	0.0	0.0	-9.4	0.0
6	0.0	-174.3	0.0	0.0	-9.4	0.0
7	0.0	-174.3	0.0	0.0	-9.4	0.0
8	0.0	-174.3	0.0	0.0	-9.4	0.0
9	0.0	-174.3	0.0	0.0	-9.4	0.0
10	0.0	-174.3	0.0	0.0	-9.4	0.0
11	0.0	-183.6	0.0	0.0	-10.8	0.0

Defined Units

Pier Cap Live Load Analysis

References

Reference:F:\HDRDesignExamples\Ex1_PCBeam\301DLsSub.mcd(R)

Description

This section provides the pier cap design live load for (1) maximum positive moment, (2) maximum negative moment and (3) overhang negative moment.

Page Contents

190 **A. Input Variables**

A1. Shear: Skewed Modification Factor [LRFD 4.6.2.2.3c]

A2. Maximum Live Load Reaction at Intermediate Pier - Two HL-93 Vehicles

191 **B. Maximum Live Load Positive Moment**

B1. Influence Lines for the Maximum Positive Moment in Pier Cap

B2. HL-93 Vehicle Placement for Maximum Moment

194 **C. Maximum Negative Live Load Moment**

C1. HL-93 Vehicle Placement for Maximum Moment

196 **D. Overhang Negative Live Load Moment**

D1. HL-93 Vehicle Placement for Maximum Moment

197 **E. Summary**

A. Input Variables

A1. Shear: Skewed Modification Factor [LRFD 4.6.2.2.3c]

Skew modification factor for shear **shall** be applied to the exterior beam at the obtuse corner (θ>90 deg) and to all beams in a multibeam bridge, whereas $g_{v.Skew} = 1.086$.

A2. Maximum Live Load Reaction at Intermediate Pier - Two HL-93 Vehicles

The reaction, $R_{LLIs} = 148.0\,kip$, needs to be separated into the truck and lane components in order to determine the beam reactions due to various vehicle placements along the deck.

Reaction induced by HL-93 truck load..... $R_{trucks} = 80.3\,kip$

Reaction induced by lane load..... $R_{lanes} = 57.6\,kip$

Impact factor..... $IM = 1.33$

The truck reaction (including impact and skew modification factors) is applied on the deck as two wheel-line loads.....

$$wheel_{line} := 90\% \cdot \left(\frac{R_{trucks} \cdot IM}{2} \right) \cdot g_{v.Skew}$$

$$wheel_{line} = 52.2\,kip$$

The lane load reaction (including skew modification factor) is applied on the deck as a distributed load over the 10 ft lane.....

$$lane_{load} := 90\% \cdot \left(\frac{R_{lanes}}{10 \cdot ft} \right) \cdot g_{v.Skew}$$

$$lane_{load} = 5.6\,\frac{kip}{ft}$$

The truck wheel-line load and lane load can be placed in design lanes according to one of the following patterns.

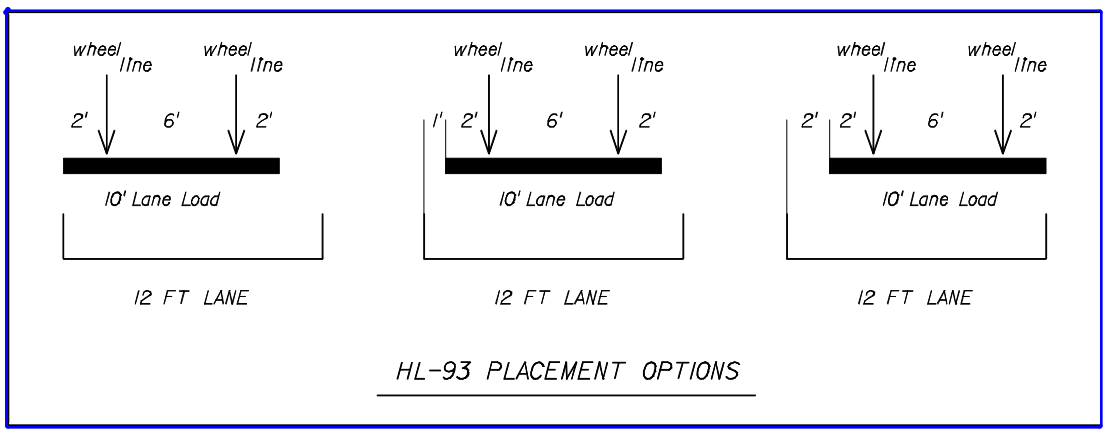

B. Maximum Positive Live Load Moment

For design live load moments in the pier cap, the controlling number and position of design live load lanes needs to be determined. This section shows a means of determining the controlling configuration of design lanes, along with the corresponding beam loads and pier cap moments.

B1. Influence Lines for the Maximum Positive Moment in Pier Cap

The influence lines for the pier cap will help determine the placement of design lanes on the deck to maximize moments in the pier cap. The influence lines are developed from the following model of the substructure.

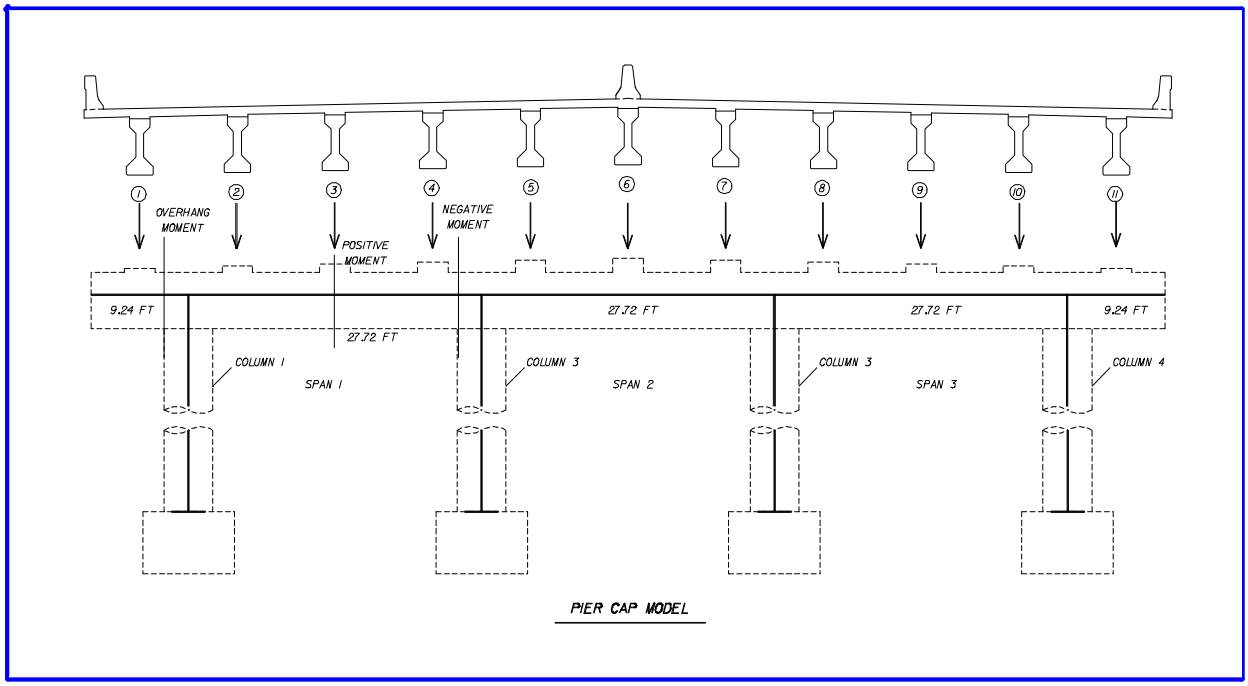

The maximum positive moment in the pier cap will occur in the first bay. Typically, the maximum positive moment occurs at a distance of 0.4L from column 1 in span 1 for self-weight and uniformly applied loads. For concentrated loads, the maximum positive moment is expected to occur at beam 3 (0.5L) location. For this example, the finite element program LARSA 2000 was used to generate the influence lines at beam 3 location in the substructure model.

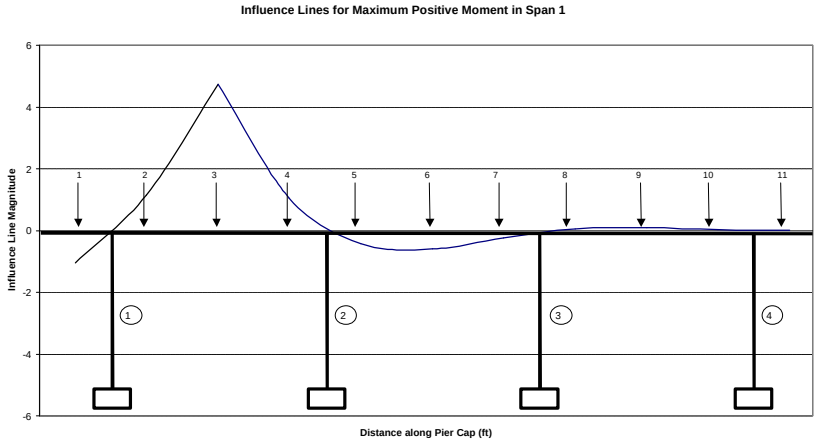

Influence Lines
Maximum Positive Moment in Span 1

Beam	Distance	Influence Line Magnitude
1	4.6	-1.04
2	13.9	1.16
3	23.1	4.74
4	32.3	1.05
5	41.6	-0.42
6	50.8	-0.60
7	60.1	-0.23
8	69.3	0.05
9	78.5	0.09
10	87.8	0.03
11	97.0	0.00

B2. HL-93 Vehicle Placement for Maximum Moment

HL-93 vehicles, comprising of HL-93 wheel-line loads and lane loads, should be placed on the deck to maximize the moments in the pier cap.

Design Lane Placements

For this example, the lane placements should maximize the positive moment in span 1. Referring to the influence lines for the pier cap, lanes placed above beams 2, 3, 4, 8, 9, and 10 will contribute to the maximum positive moment. Beam 3 is the most influential, followed by beam 2. The graph also shows that lanes placed above beams 1, 5, 6, 7, and 11 will reduce the maximum positive moment. From this information, several possible configurations for 1, 2, 3, and 4 lanes can be developed to maximize the positive moment in span 1.

Note that for the maximum cap moments, live load is also placed on the other roadway. The influence line justifies live load placement in this roadway. Utilizing our engineering judgement, it is possible to have up to four lanes of HL-93 vehicles at a single time. However, note that for the calculation of the braking forces, vehicles in the opposite roadway were not utilized since the braking forces would be counter productive or in opposite directions.

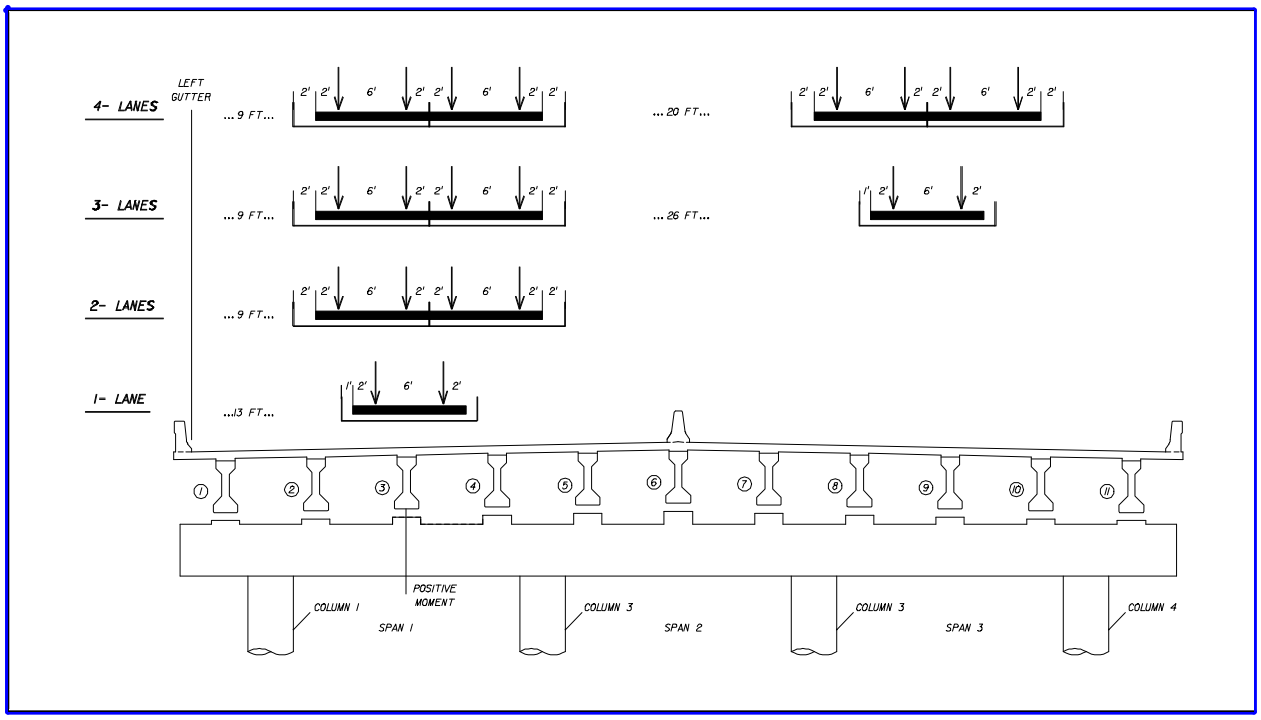

Depending on the number of design lanes, a multiple presence factor (LRFD Table 3.6.1.1.2-1) is applied to the HL-93 wheel line loads and lane load.

$$MPF = \begin{cases} 1.2 & \text{if Number_of_lanes} = 1 \\ 1.0 & \text{if Number_of_lanes} = 2 \\ 0.85 & \text{if Number_of_lanes} = 3 \\ 0.65 & \text{if Number_of_lanes} \geq 4 \end{cases}$$

Corresponding Beam Loads

The live loads from the design lanes are transferred to the pier cap through the beams. Utilizing the lever rule, the beam loads corresponding to the design lane configurations are calculated and multiplied by the multiple presence factors.

	Beam Loads			
Beam	1 Lane	2 Lanes	3 Lanes	4 Lanes
1	0	0	0	0
2	34	61.7	52.5	40.1
3	124.7	136.3	115.9	88.6
4	34	104.6	89	69
5	0	18.7	15.9	75.6
6	0	0	0	40.1
7	0	0	0	0
8	0	0	42.4	32.4
9	0	0	85.9	65.7
10	0	0	8.3	6.3
11	0	0	0	0

Corresponding Moments

The moments in the pier cap corresponding to the beam loads were determined using the Larsa 2000.

	Maximum Positive Moment (k-ft)
1 Lane	725.7
2 Lanes	892.8
3 Lanes	769.3
4 Lanes	590.2

C. Maximum Negative Live Load Moment

C1. Influence Lines for Maximum Negative Moment in Pier Cap

The maximum negative moment in the pier cap can occur at the first or second column. In this section, Larsa 2000 was used to generate the influence lines at the second intermediate column in the pier cap model. The maximum negative moment at the first column, pier cap overhang, will be checked separately.

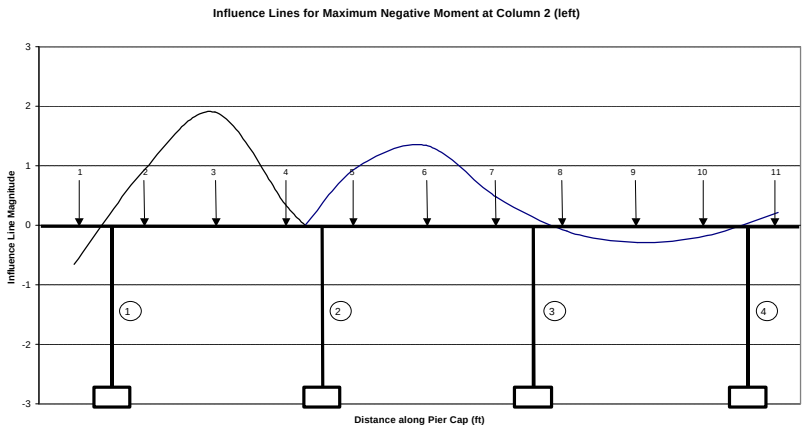

Influence Lines
Maximum Negative Moment at Column 2

Beam	Distance	Influence Line Magnitude (Column left face)	Influence Line Magnitude (Column right face)
1	4.6	-0.66	0.27
2	13.9	0.93	-0.57
3	23.1	1.90	-1.47
4	32.3	0.36	-1.00
Col left	35.0	0.00	--
Col right	39.0	--	0.00
5	41.6	0.96	-0.26
6	50.8	1.34	-1.63
7	60.1	0.48	-0.74
8	69.3	-0.10	0.15
9	78.5	-0.29	0.26
10	87.8	-0.17	0.08
11	97.0	0.21	0.04

C2. HL-93 Vehicle Placement for Maximum Moment

HL-93 vehicles, comprising of HL-93 wheel-line loads and lane loads, should be placed on the deck to maximize the moments in the pier cap.

Design Lane Placements

For this example, the lane placements should maximize the negative moment above column 2. Referring to the influence lines for the pier cap, lanes placed above beams 2, 3, 4, 5, 6, 7, and 11 will contribute to the maximum negative moment. Beam 3 is the most influential, followed by beam 6. The graph also shows that lanes placed above beams 1, 8, 9, and 10 will reduce the maximum negative moment. From this information, several possible configurations for 2, 3, and 4 lanes can be developed to maximize the negative moment above column 2.

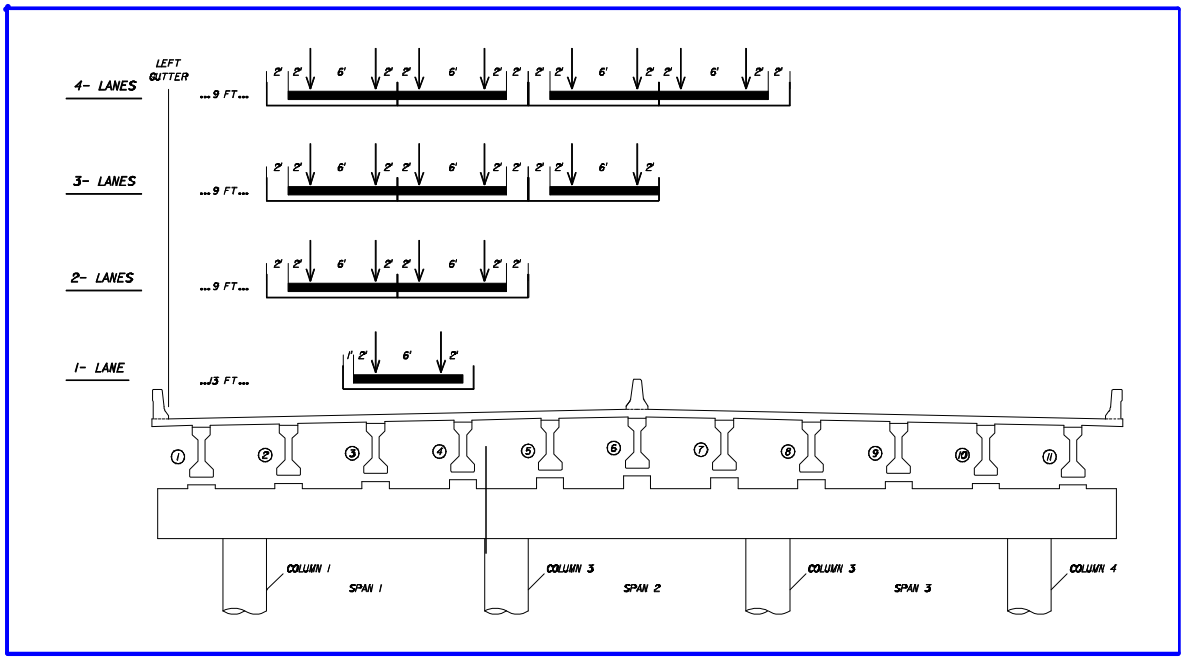

Corresponding Beam Loads

The live loads from the design lanes are transferred to the pier cap through the beams. Utilizing the lever rule, the beam loads corresponding to the design lane configurations are calculated and multiplied by the multiple presence factors.

	Beam Loads			
Beam	1 Lane	2 Lanes	3 Lanes	4 Lanes
1	0	0	0	0
2	1.7	61.7	52.5	40.1
3	117.1	136.3	115.9	88.6
4	74	104.6	89	68
5	0	18.7	68.3	52.3
6	0	0	83	88.6
7	0	0	1.2	68
8	0	0	0	12.2
9	0	0	0	0
10	0	0	0	0
11	0	0	0	0

Corresponding Moments

The moments in the pier cap corresponding to the beam loads were determined using the Larsa 2000.

	Maximum Negative Moment (k-ft)
1 Lane	-515.1
2 Lanes	-737.6
3 Lanes	-814.6
4 Lanes	-265.8

D. Overhang Negative Live Load Moment

In this section, the negative moment at column 1 is determined due to the overhang.

D1. HL-93 Vehicle Placement for Maximum Moment

HL-93 vehicles, comprising of HL-93 wheel-line loads and lane loads, should be placed on the deck to maximize the moments in the pier cap.

Design Lane Placements

For this example, the lane placements should maximize the negative moment above column 1. The maximum negative moment will be obtained by loading beam 1. From this information, placing a single lane next to the barrier will maximize the negative moment above column 1.

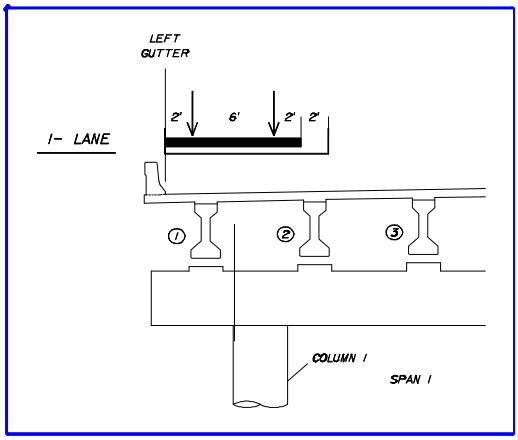

Corresponding Beam Loads and Moment

The live loads from the design lanes are transferred to the pier cap through the beams. Utilizing the lever rule, the beam loads corresponding to the design lane configurations are calculated and multiplied by the multiple presence factors.

	Beam Loads	
Beam	1 Lane	2 Lanes
1	144.6	---
2	48.2	---
3	0	---
4	0	---
5	0	---
6	0	---
7	0	---
8	0	---
9	0	---
10	0	---
11	0	---

The moments in the pier cap corresponding to the beam loads were determined using the Larsa 2000.

	Maximum Overhang Moment (k-ft)
1 Lane	-727.6

E. Summary

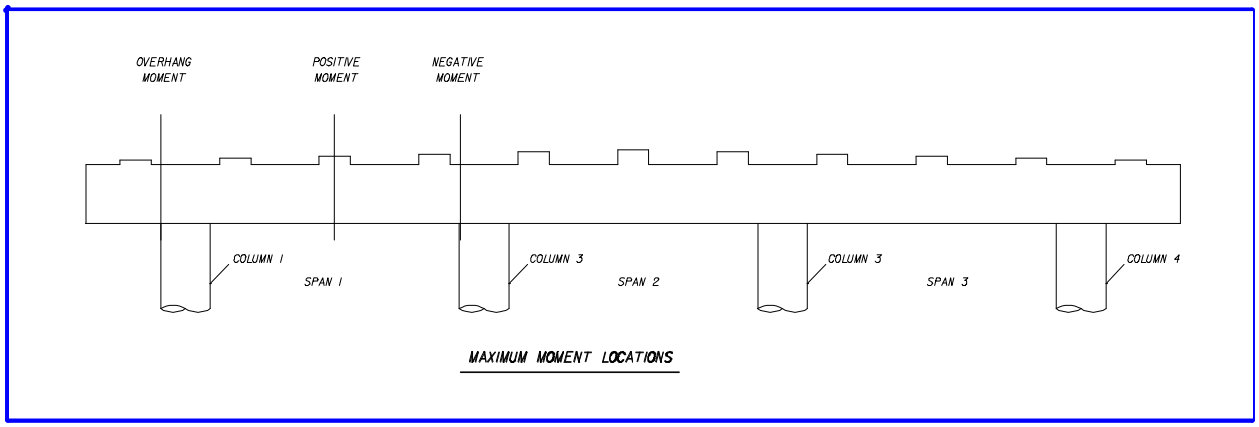

The results show that two design lanes govern. The following beam loads, corresponding to the governing positive moment live load, will later be used in the limit state combinations to obtain the design factored and unfactored positive moments for the pier cap.....

UNFACTORED LIVE LOAD (+M) AT PIER			
	LL Loads (kip)		
Beam	x	y	z
1	0.0	0.0	0.0
2	0.0	-61.7	0.0
3	0.0	-136.3	0.0
4	0.0	-104.6	0.0
5	0.0	-18.7	0.0
6	0.0	0.0	0.0
7	0.0	0.0	0.0
8	0.0	0.0	0.0
9	0.0	0.0	0.0
10	0.0	0.0	0.0
11	0.0	0.0	0.0

The results show that three design lanes govern. The following beam loads, corresponding to the governing negative moment live load, will later be used in the limit state combinations to obtain the design factored and unfactored negative moments for the pier cap.....

UNFACTORED LIVE LOAD (-M) AT PIER			
	LL Loads (kip)		
Beam	x	y	z
1	0.0	0.0	0.0
2	0.0	-52.5	0.0
3	0.0	-115.9	0.0
4	0.0	-89.0	0.0
5	0.0	-68.3	0.0
6	0.0	-83.0	0.0
7	0.0	-1.2	0.0
8	0.0	0.0	0.0
9	0.0	0.0	0.0
10	0.0	0.0	0.0
11	0.0	0.0	0.0

The following beam loads, corresponding to the governing overhang negative moment live load, will later be used in the limit state combinations to obtain the design factored and unfactored negative moments for the pier cap.....

UNFACTORED LIVE LOAD (Overhang) AT PIER

Beam	LL Loads (kip) x	y	z
1	0.0	-144.6	0.0
2	0.0	-48.2	0.0
3	0.0	0.0	0.0
4	0.0	0.0	0.0
5	0.0	0.0	0.0
6	0.0	0.0	0.0
7	0.0	0.0	0.0
8	0.0	0.0	0.0
9	0.0	0.0	0.0
10	0.0	0.0	0.0
11	0.0	0.0	0.0

Defined Units

Pier Cap Design Loads

Reference

Reference:F:\HDRDesignExamples\Ex1_PCBeam\302LLs.mcd(R)

Description

This section provides the design parameters necessary for the substructure pier cap design. The loads calculated in this file are only from the superstructure. Substructure self-weight, wind on substructure and uniform temperature on substructure can be generated by the substructure analysis model/program chosen by the user.

For this design example, Larsa 2000 was chosen as the analysis model/program (http://www.larsausa.com)

Page Contents

200 **LRFD Criteria**

202 **A. General Criteria**

- **A1. Bearing Design Movement/Strain**
- **A2. Pier Dead Load Summary**
- **A3. Pier Live Load Summary**
- **A4. Center of Movement**

205 **B. Lateral Load Analysis**

- **B1. Center of Movement**
- **B2. Braking Force: BR [LRFD 3.6.4]**
- **B3. Temperature, Creep and Shrinkage Forces**
- **B4. Wind Pressure on Structure: WS**
- **B5. Wind Pressure on Vehicles [LRFD 3.8.1.3]**

216 **C. Design Limit States**

- **C1. Strength I Limit State**
- **C2. Strength V Limit State**
- **C3. Service I Limit State**

LRFD Criteria

STRENGTH I - Basic load combination relating to the normal vehicular use of the bridge without wind.

WA = 0 For superstructure design, water load and stream pressure are not applicable.

FR = 0 No friction forces.

TU Uniform temperature load effects on the pier will be generated by the substructure analysis model (Larsa 2000).

$$Strength1 = 1.25 \cdot DC + 1.50 \cdot DW + 1.75 \cdot LL + 0.50 \cdot (TU + CR + SH)$$

STRENGTH II - Load combination relating to the use of the bridge by Owner-specified special design vehicles, evaluation permit vehicles, or both without wind.

"Permit vehicles are not evaluated in this design example"

STRENGTH III - Load combination relating to the bridge exposed to wind velocity exceeding 55 MPH.

$$Strength3 = 1.25 \cdot DC + 1.50 \cdot DW + 1.40 \cdot WS + 0.50 \cdot (TU + CR + SH)$$

"Applicable but does not control substructure pier cap design... not evaluated"

STRENGTH IV - Load combination relating to very high dead load to live load force effect ratios.

"Not applicable for the substructure design in this design example"

STRENGTH V - Load combination relating to normal vehicular use of the bridge with wind of 55 MPH velocity.

$$Strength5 = 1.25 \cdot DC + 1.50 \cdot DW + 1.35 \cdot LL + 1.35 \cdot BR + 0.40 \cdot WS + 1.0 \cdot WL \ldots + 0.50 \cdot (TU + CR + SH)$$

EXTREME EVENT I - Load combination including earthquake.

"Not applicable for this simple span prestressed beam bridge design example"

EXTREME EVENT II - Load combination relating to ice load, collision by vessels and vehicles, and certain hydraulic events.

"Not applicable for the substructure design in this design example"

SERVICE I - Load combination relating to the normal operational use of the bridge with a 55 MPH wind and all loads taken at their nominal values.

$$Service1 = 1.0 \cdot DC + 1.0 \cdot DW + 1.0 \cdot LL + 1.0 \cdot BR + 0.3WS + 1.0 \cdot WL + 1.0 \cdot (TU + CR + SH$$

SERVICE II - Load combination intended to control yielding of steel structures and slip of slip-critical connections due to vehicular live load.

"Not applicable for this simple span prestressed beam bridge design example"

SERVICE III - Load combination relating only to tension in prestressed concrete structures with the objective of crack control.

"Not applicable for the substructure design in this design example"

FATIGUE - Fatigue load combination relating to repetitive gravitational vehicular live load under a single design truck.

"Not applicable for the substructure design in this design example"

A. General Criteria

A1. Bearing Design Movement/Strain

Strain due to temperature, creep and shrinkage..... $\varepsilon_{CST} = 0.00047$ *(**Note**: See Sect. 2.10.B4 - Bearing Design Movement/Strain)*

A2. Pier Dead Load Summary

UNFACTORED BEAM REACTIONS AT PIER						
	DC Loads (kip)			DW Loads (kip)		
Beam	x	y	z	x	y	z
1	0.0	-183.6	0.0	0.0	-10.8	0.0
2	0.0	-174.3	0.0	0.0	-9.4	0.0
3	0.0	-174.3	0.0	0.0	-9.4	0.0
4	0.0	-174.3	0.0	0.0	-9.4	0.0
5	0.0	-174.3	0.0	0.0	-9.4	0.0
6	0.0	-174.3	0.0	0.0	-9.4	0.0
7	0.0	-174.3	0.0	0.0	-9.4	0.0
8	0.0	-174.3	0.0	0.0	-9.4	0.0
9	0.0	-174.3	0.0	0.0	-9.4	0.0
10	0.0	-174.3	0.0	0.0	-9.4	0.0
11	0.0	-183.6	0.0	0.0	-10.8	0.0

A3. Pier Live Load Summary

Unfactored beam reactions at the pier for LL loads corresponding to maximum positive moment

UNFACTORED LIVE LOAD (+M) AT PIER			
	LL Loads (kip)		
Beam	x	y	z
1	0.0	0.0	0.0
2	0.0	-61.7	0.0
3	0.0	-136.3	0.0
4	0.0	-104.6	0.0
5	0.0	-18.7	0.0
6	0.0	0.0	0.0
7	0.0	0.0	0.0
8	0.0	0.0	0.0
9	0.0	0.0	0.0
10	0.0	0.0	0.0
11	0.0	0.0	0.0

Unfactored beam reactions at the pier for LL loads corresponding to maximum negative moment

UNFACTORED LIVE LOAD (-M) AT PIER			
	LL Loads (kip)		
Beam	x	y	z
1	0.0	0.0	0.0
2	0.0	-52.5	0.0
3	0.0	-115.9	0.0
4	0.0	-89.0	0.0
5	0.0	-68.3	0.0
6	0.0	-83.0	0.0
7	0.0	-1.2	0.0
8	0.0	0.0	0.0
9	0.0	0.0	0.0
10	0.0	0.0	0.0
11	0.0	0.0	0.0

Unfactored beam reactions at the pier for LL loads corresponding to maximum overhang negative moment

UNFACTORED LIVE LOAD (Overhang) AT PIER			
	LL Loads (kip)		
Beam	x	y	z
1	0.0	-144.6	0.0
2	0.0	-48.2	0.0
3	0.0	0.0	0.0
4	0.0	0.0	0.0
5	0.0	0.0	0.0
6	0.0	0.0	0.0
7	0.0	0.0	0.0
8	0.0	0.0	0.0
9	0.0	0.0	0.0
10	0.0	0.0	0.0
11	0.0	0.0	0.0

A4. Center of Movement

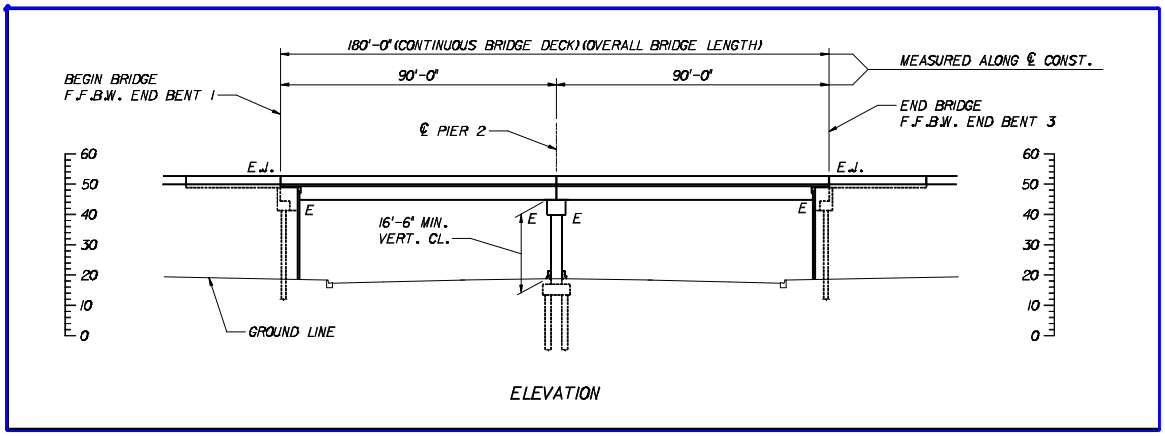

By inspection, the center of movement will be the intermediate pier..... $L_0 := L_{span}$

$L_0 = 90.0\,\text{ft}$

B. Lateral Load Analysis

B1. Centrifugal Force: CE [LRFD 3.6.3]

LRFD 4.6.1.2.1 states that effects of curvature may be neglected on open cross-sections whose radius is such that the central angle subtended by each span is less than:

Number of Beams	Angle for One Span	Angle for Two or More Spans
2	2 °	3 °
3 or 4	3 °	4 °
5 or more	4 °	5 °

Horizontal curve data..... $R := 3800 \cdot ft$

Angle due to one span..... $\theta_{1span} := \frac{L_{span}}{R}$

$\theta_{1span} = 1.4\ deg$

Angle due to all spans..... $\theta_{2span} := \frac{L_{bridge}}{R}$

$\theta_{2span} = 2.7\ deg$

Since the number of beams is greater than 5 and the angles are within LRFD requirements, the bridge can be analyzed as a straight structure and therefore, centrifigal force effects are not necessary.

B2. Braking Force: BR [LRFD 3.6.4]

The braking force should be taken as the greater of:

25% of axle weight for design truck / tandem

5% of design truck / tandem and lane

The number of lanes for braking force calculations depends on future expectations of the bridge. For this example, the bridge is not expected to become one-directional in the future, and future widening is expected to occur to the outside. From this information, the number of lanes is

$N_{lanes} = 3$

The multiple presence factor (LRFD Table 3.6.1.1.2-1) should be taken into account..

$$MPF := \begin{cases} 1.2 & \text{if } N_{lanes} = 1 \\ 1.0 & \text{if } N_{lanes} = 2 \\ 0.85 & \text{if } N_{lanes} = 3 \\ 0.65 & \text{otherwise} \end{cases}$$

$MPF = 0.85$

Braking force as 25% of axle weight for design truck / tandem..... $BR_{Force.1} := 25\% \cdot (72 \cdot kip) \cdot N_{lanes} \cdot MPF$

$BR_{Force.1} = 45.9\ kip$

Braking force as 5% of axle weight for design truck / tandem and lane..... $BR_{Force.2} := 5\% \cdot (72 \cdot kip + w_{lane} \cdot L_{span}) \cdot N_{lanes} \cdot MPF$

$BR_{Force.2} = 16.5\,kip$

Governing braking force..... $BR_{Force} := \max(BR_{Force.1}, BR_{Force.2})$

$BR_{Force} = 45.9\,kip$

Distribution of Braking Forces to Pier

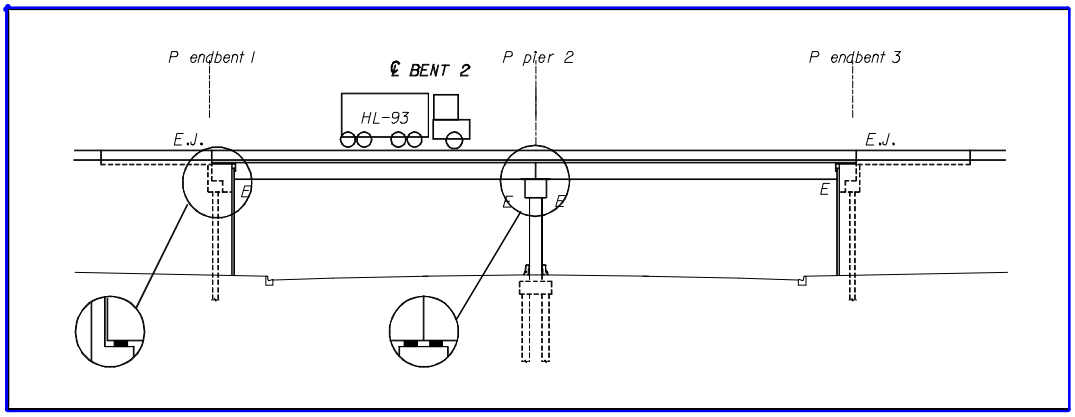

The same bearing pads are provided at the pier and end bent to distribute the braking forces. The braking force transferred to the pier or end bents is a function of the bearing pad and pier column stiffnesses. For this example, (1) the pier column stiffnesses are ignored, (2) the deck is continuous over pier 2 and expansion joints are provided only at the end bents.

Braking force at pier..... $BR_{Pier} = BR_{Force} \cdot (K_{Pier})$

where..... $K_{Pier} = \dfrac{N_{pads.pier} \cdot K_{pad}}{\sum (N_{pads.pier} + N_{pads.endbent}) \cdot K_{pad}}$

Simplifying and using variables defined in this example,

pier stiffness can be calculated as..... $K_{Pier} := \dfrac{2 \cdot N_{beams}}{(1 + 2 + 1) \cdot N_{beams}}$

$K_{Pier} = 0.5$

corresponding braking force..... $BR_{Pier} := BR_{Force} \cdot (K_{Pier})$

$BR_{Pier} = 23.0\,kip$

Since the bridge superstructure is very stiff in the longitudinal direction, the braking forces are assumed to be equally distributed to the beams under the respective roadway.

$beams := 6$

Braking force at pier per beam..... $BR_{Pier} := \dfrac{BR_{Pier}}{beams}$

$BR_{Pier} = 3.8\,kip$

Adjustments for Skew

The braking force is transferred to the pier by the bearing pads. The braking forces need to be resolved along the direction of the skew for design of the pier substructure.

Braking force perpendicular (z-direction) to the pier per beam..... $BR_{z.Pier} := BR_{Pier} \cdot \cos(Skew)$

$BR_{z.Pier} = 3.3\ kip$

Braking force parallel (x-direction) to the pier per beam..... $BR_{x.Pier} := BR_{Pier} \cdot \sin(Skew)$

$BR_{x.Pier} = -1.9\ kip$

Adjustments for Braking Force Loads Applied 6' above Deck

The longitudinal moment induced by braking forces over a pier is resisted by the moment arm. Conservatively, assume the braking occurs over one span only, then the result is an uplift reaction on the downstation end bent or pier and a downward reaction at the upstation end bent or pier. In this example, the braking is assumed to occur in span 1 and the eccentricity of the downward load with the bearing and centerline of pier eccentricities is ignored.

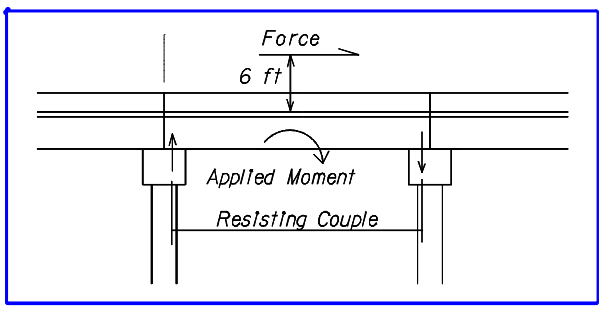

Moment arm from top of bearing pad to location of applied load..... $M_{arm} := 6ft + h$

$M_{arm} = 11.250\ ft$

Braking force in pier (y-direction), vertical $BR_{y.Pier} := \dfrac{-BR_{Pier} \cdot M_{arm}}{L_{span}}$

$BR_{y.Pier} = -0.5\ kip$

Only the downward component of this force is considered. Typically, the vertical forces (uplift) are small and can be ignored.

BRAKING FORCES AT PIER			
	BR Loads (kip)		
Beam	x	y	z
1	-1.9	-0.5	3.3
2	-1.9	-0.5	3.3
3	-1.9	-0.5	3.3
4	-1.9	-0.5	3.3
5	-1.9	-0.5	3.3
6	-1.9	0.0	0.0
7	0.0	0.0	0.0
8	0.0	0.0	0.0
9	0.0	0.0	0.0
10	0.0	0.0	0.0
11	0.0	0.0	0.0

B3. Creep, Shrinkage, and Temperature Forces

The forces transferred from the superstructure to the substructure due to temperature, creep, and shrinkage are influenced by the shear displacements in the bearing pad. In this example, only temperature and shrinkage effects are considered. Creep is ignored, since this example assumes the beams will creep towards their center and the composite deck will offer some restraint.

Displacements at top of pier due to temperature, creep, and shrinkage.....

$$\Delta_{Pier2} := \left(L_0 - x_{dist_1}\right)\cdot\varepsilon_{CST} \quad \text{where} \quad \varepsilon_{CST} = 0.00047$$

$$\Delta_{Pier2} = 0.0\,\text{in}$$

Since the bridge has two equal spans and fairly constant pier stiffnesses, the center of movement is the intermediate pier. The center of movement has no displacements, so the pier has no displacements.

Shear force transferred through each bearing pad due to creep, shrinkage, and temperature.....

$$CST_{Pier} := \frac{G_{max}\cdot A_{pad}\cdot \Delta_{Pier2}}{h_{rt}}$$

$$CST_{Pier} = 0.00\,\text{kip}$$

This force needs to be resolved along the direction of the skew...

Shear force perpendicular (z-direction) to the pier per beam.....

$$CST_{z.Pier} := CST_{Pier}\cdot\cos(Skew)$$

$$CST_{z.Pier} = 0.00\,\text{kip}$$

Shear force parallel (x-direction) to the pier per beam.....

$$CST_{x.Pier} := CST_{Pier}\cdot\sin(Skew)$$

$$CST_{x.Pier} = 0.00\,\text{kip}$$

Summary of beam reactions at the pier due to creep, shrinkage and temperature...

Note:
Shrinkage and temperature effects from the pier substructure can be calculated within the substructure model / analysis program. These values are only from the superstructure.

CREEP, SHRINKAGE, TEMPERATURE FORCES AT PIER			
	CR, SH, TU Loads (kip)		
Beam	x	y	z
1	0.0	0.0	0.0
2	0.0	0.0	0.0
3	0.0	0.0	0.0
4	0.0	0.0	0.0
5	0.0	0.0	0.0
6	0.0	0.0	0.0
7	0.0	0.0	0.0
8	0.0	0.0	0.0
9	0.0	0.0	0.0
10	0.0	0.0	0.0
11	0.0	0.0	0.0

B4. Wind Pressure on Structure: WS

The wind loads are applied to the superstructure and substructure.

Loads from Superstructure [LRFD 3.8.1.2.2]

The wind pressure on the superstructure consists of lateral (x-direction) and longitudinal (z-direction) components.

For prestressed beam bridges, the following wind pressures are given in the LRFD.....

$$Wind_{skew} := \begin{pmatrix} 0 \\ 15 \\ 30 \\ 45 \\ 60 \end{pmatrix} \qquad Wind_{LRFD} := \begin{array}{c} \begin{array}{cc} \underline{x} & \underline{z} \end{array} \\ \begin{pmatrix} .050 & .000 \\ .044 & .006 \\ .041 & .012 \\ .033 & .016 \\ .017 & .019 \end{pmatrix} \end{array} \cdot ksf$$

The wind pressures in LRFD should be increased by 20% for bridges located in Palm Beach, Broward, Dade, and Monroe counties (LRFD 2.4.1). For bridges over 75 feet high or with unusual structural features, the wind pressures must be submitted to FDOT for approval.

This example assumes a South Florida location, so the 20% factor applies.....

$$Wind_{FDOT} := \gamma_{FDOT} \cdot Wind_{LRFD}$$

$$Wind_{FDOT} = \begin{array}{c} \begin{array}{cc} \underline{x} & \underline{z} \end{array} \\ \begin{pmatrix} 0.060 & 0.000 \\ 0.053 & 0.007 \\ 0.049 & 0.014 \\ 0.040 & 0.019 \\ 0.020 & 0.023 \end{pmatrix} \end{array} ksf$$

Composite section height.....

$h = 5.25\,ft$

Superstructure Height.....

$h_{Super} := h + 2.667 \cdot ft$

Height above ground that the wind pressure is applied.....

$Z_1 := (h_{Col} - h_{Surcharge}) + h_{Cap} + h_{Super}$

$Z_1 = 24.42\,ft$

The exposed superstructure area influences the wind forces that are transferred to the supporting substructure. Tributary areas are used to determine the exposed superstructure area.

Exposed superstructure area at Pier 2.....

$A_{Super} := L_{span} \cdot h_{Super}$

$A_{Super} = 712.5\,ft^2$

Forces due to wind applied to the superstructure.....

$WS_{Super.Pier} := Wind_{FDOT} \cdot A_{Super}$

$$WS_{Super.Pier} = \begin{array}{c} \begin{array}{cc} \underline{x} & \underline{z} \end{array} \\ \begin{pmatrix} 42.8 & 0.0 \\ 37.6 & 5.1 \\ 35.1 & 10.3 \\ 28.2 & 13.7 \\ 14.5 & 16.2 \end{pmatrix} \end{array} kip$$

A conservative approach is taken to minimize the analysis required. The maximum transverse and longitudinal forces are used in the following calculations.

Maximum transverse force.....

$F_{WS.x} := WS_{Super.Pier_{0,0}}$

$F_{WS.x} = 42.8\,kip$

Maximum longitudinal force.....

$F_{WS.z} := WS_{Super.Pier_{4,1}}$

$F_{WS.z} = 16.2\,kip$

The forces due to wind need to be resolved along the direction of the skew.

Force perpendicular (z-direction) to the pier.....

$WS_{z.Pier} := F_{WS.z} \cdot \cos(Skew) - F_{WS.x} \cdot \sin(Skew)$

$WS_{z.Pier} = 35.4\,kip$

Force parallel (x-direction) to the pier.....

$WS_{x.Pier} := F_{WS.z} \cdot \sin(Skew) + F_{WS.x} \cdot \cos(Skew)$

$WS_{x.Pier} = 28.9\,kip$

The force due to wind acts on the full superstructure. This force needs to be resolved into the reactions in each beam. The following table summarizes the beam reactions due to wind.

WIND ON STRUCTURE FORCES AT PIER

Beam	WS Loads (kip) x	y	z
1	2.6	0.0	3.2
2	2.6	0.0	3.2
3	2.6	0.0	3.2
4	2.6	0.0	3.2
5	2.6	0.0	3.2
6	2.6	0.0	3.2
7	2.6	0.0	3.2
8	2.6	0.0	3.2
9	2.6	0.0	3.2
10	2.6	0.0	3.2
11	2.6	0.0	3.2

Loads from Substructure [LRFD 3.8.1.2.3]

Wind pressure applied directly to the substructure..... $Wind_{LRFD} := 0.04 \cdot ksf$

The wind pressures in LRFD should be increased by 20% for bridges located in Palm Beach, Broward, Dade, and Monroe counties (LRFD 2.4.1).

This example assumes a South Florida location, so the 20% factor applies..... $Wind_{FDOT} := \gamma_{FDOT} \cdot Wind_{LRFD}$

$Wind_{FDOT} = 0.048\ ksf$

General equation for wind forces applied to the substructure.....

$$WS_{Force} = (Wind_{Pressure}) \cdot (Exposed\ Area_{Substructure}) \cdot (Skew_{Adjustment})$$

For modeling purposes in this example, the following information summarizes the placement of wind forces on the substructure.

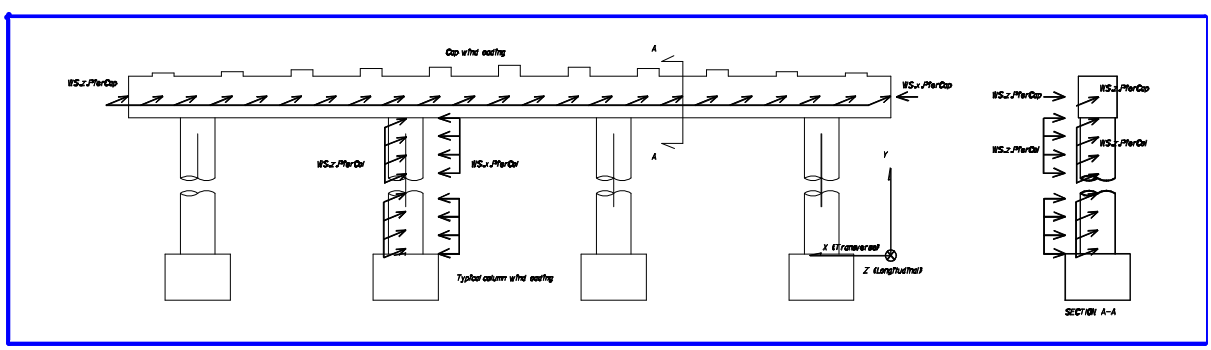

The longitudinal (z-direction) wind load on the pier cap is applied as a line load along the front of the cap.

$$WS_{z.PierCap} := Wind_{FDOT} \cdot \left(h_{Cap} \cdot \cos(Skew) - h_{Cap} \cdot \sin(Skew)\right)$$

$$WS_{z.PierCap} = 0.30\,klf$$

The transverse (x-direction) wind load on the pier cap is applied as a point load on the end of the cap.

$$WS_{x.PierCap} := Wind_{FDOT} \cdot \left[\left(b_{Cap} \cdot h_{Cap}\right) \cdot \cos(Skew) + \left(L_{Cap} \cdot h_{Cap}\right) \cdot \sin(Skew)\right]$$

$$WS_{x.PierCap} = -10.13\,kip$$

The longitudinal (z-direction) wind load on the column is applied as a line load on the exposed column height.

$$WS_{z.PierCol} := Wind_{FDOT} \cdot \left(b_{Col} \cdot \cos(Skew) - b_{Col} \cdot \sin(Skew)\right)$$

$$WS_{z.PierCol} = 0.26\,klf$$

The transverse (x-direction) wind load on the column is applied as a line load on the exposed column height.

$$WS_{x.PierCol} := Wind_{FDOT} \cdot \left(b_{Col} \cdot \cos(Skew) + b_{Col} \cdot \sin(Skew)\right)$$

$$WS_{x.PierCol} = 0.07\,klf$$

B5. Wind Pressure on Vehicles [LRFD 3.8.1.3]

The LRFD specifies that wind load should be applied to vehicles on the bridge.....

$$Skew_{wind} := \begin{pmatrix} 0 \\ 15 \\ 30 \\ 45 \\ 60 \end{pmatrix} \qquad Wind_{LRFD} := \begin{array}{c} \begin{array}{cc} \underline{x} & \underline{z} \end{array} \\ \begin{pmatrix} .100 & 0 \\ .088 & .012 \\ .082 & .024 \\ .066 & .032 \\ .034 & .038 \end{pmatrix} \end{array} \cdot \frac{kip}{ft}$$

The wind pressures in LRFD should be increased by 20% for bridges located in Palm Beach, Broward, Dade, and Monroe counties (LRFD 2.4.1).

This example assumes a South Florida location, so the 20% factor applies.....

$$Wind_{FDOT} := 1.20 \cdot Wind_{LRFD}$$

$$Wind_{FDOT} = \begin{array}{c} \begin{array}{cc} \underline{x} & \underline{z} \end{array} \\ \begin{pmatrix} 0.120 & 0.000 \\ 0.106 & 0.014 \\ 0.098 & 0.029 \\ 0.079 & 0.038 \\ 0.041 & 0.046 \end{pmatrix} \end{array} \frac{kip}{ft}$$

Height above ground for wind pressure on vehicles..... $Z_2 := (Z_1 - 2.1667 \cdot ft) + 6ft$

$Z_2 = 28.25\,ft$

The wind forces on vehicles are transmitted to Pier 2 of the substructure using tributary lengths..... $L_{Pier} := L_{span}$

$L_{Pier} = 90\,ft$

Forces due to wind on vehicles applied to the superstructure..... $WL_{Super.Pier} := Wind_{FDOT} \cdot L_{Pier}$

$$WL_{Super.Pier} = \begin{array}{cc} \underline{x} & \underline{z} \\ \end{array} \begin{pmatrix} 10.8 & 0.0 \\ 9.5 & 1.3 \\ 8.9 & 2.6 \\ 7.1 & 3.5 \\ 3.7 & 4.1 \end{pmatrix} kip$$

A conservative approach is taken to minimize the analysis required. The maximum transverse and longitudinal forces are used in the following calculations.

Maximum transverse force..... $F_{WL.x} := WL_{Super.Pier_{0,0}}$

$F_{WL.x} = 10.8\,kip$

Maximum longitudinal force..... $F_{WL.z} := WL_{Super.Pier_{4,1}}$

$F_{WL.z} = 4.1\,kip$

The forces due to wind need to be resolved along the direction of the skew.

Force perpendicular (z-direction) to the pier..... $WL_{z.Pier} := F_{WL.z} \cdot \cos(Skew) - F_{WL.x} \cdot \sin(Skew)$

$WL_{z.Pier} = 8.95\,kip$

Force perpendicular (z-direction) to the pier per beam..... $WL_{z.Beam} := \dfrac{WL_{z.Pier}}{N_{beams}}$

$WL_{z.Beam} = 0.81\,kip$

Force parallel (x-direction) to the cap..... $WL_{x.Pier} := F_{WL.z} \cdot \sin(Skew) + F_{WL.x} \cdot \cos(Skew)$

$WL_{x.Pier} = 7.30\,kip$

Force parallel (x-direction) to the cap per beam..... $WL_{x.Beam} := \dfrac{WL_{x.Pier}}{N_{beams}}$

$WL_{x.Beam} = 0.66\,kip$

Longitudinal Adjustments for Wind on Vehicles

The longitudinal moment is resisted by the moment arm (similar to braking forces).

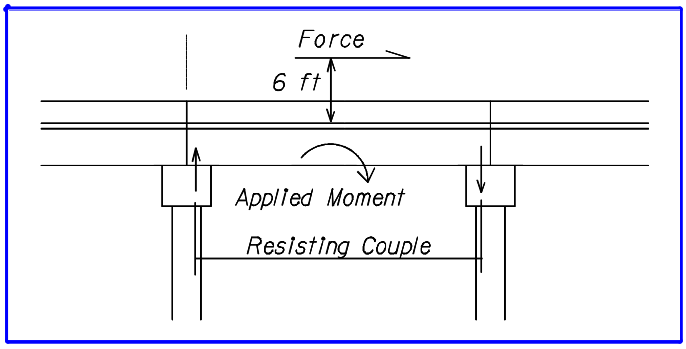

Moment arm from top of bearing pad to location of applied load.....

$M_{arm} = 11.250\ ft$ $\quad$ *($M_{arm} = h + 6\ ft$)*

Vertical force in pier due to wind pressure on vehicle per beam.....

$$WL_{y.Beam} := \frac{-WL_{z.Beam} \cdot M_{arm}}{L_{span}}$$

$WL_{y.Beam} = -0.10\ kip$

For this design example, this component of the load is **ignored**.

Transverse Adjustments for Wind on Vehicles

Using the principles of the lever rule for transverse distribution of live load on beams, the wind on live can be distributed similarly. It assumes that the wind acting on the live load will cause the vehicle to tilt over. Using the lever rule, the tilting effect of the vehicle is resisted by up and down reactions on the beams assuming the deck to act as a simple span between beams. For this example, the reaction at beam 3 is maximized for maximum positive moment in the pier cap. (To maximize the loads at other locations, these loads can be moved across the deck.)

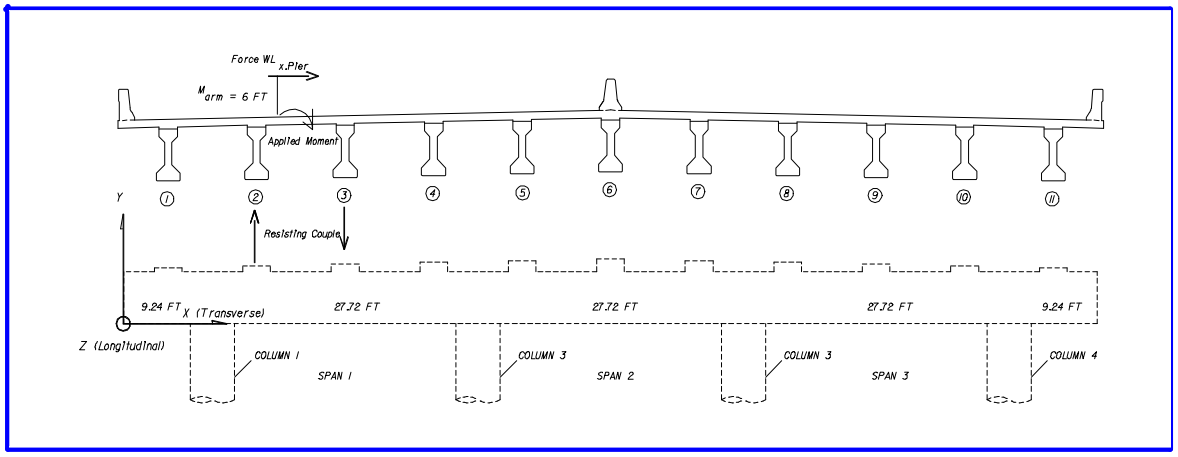

Moment arm from top of bearing pad to location of applied load.....

$$M_{arm} = 11.250\,ft$$

Vertical reaction on one beam on pier from transverse wind pressure on vehicles.....

$$WL_{y.Beam} := \frac{-WL_{x.Pier} \cdot M_{arm}}{BeamSpacing}$$

$$WL_{y.Beam} = -10.27\,kip$$

Since this load can occur at any beam location, apply this load to all beams

WIND ON LIVE LOAD FORCES AT PIER			
	WL Loads (kip)		
Beam	x	y	z
1	0.7	0.0	0.8
2	0.7	10.3	0.8
3	0.7	-10.3	0.8
4	0.7	0.0	0.8
5	0.7	0.0	0.8
6	0.7	0.0	0.8
7	0.7	0.0	0.8
8	0.7	0.0	0.8
9	0.7	0.0	0.8
10	0.7	0.0	0.8
11	0.7	0.0	0.8

C. Design Limit States

The design loads for strength I, strength V, and service I limit states are summarized in this section. For each limit state, three loading conditions are presented: maximum positive moment in the cap, maximum negative moment in span 1, and maximum overhang negative moment.

These reactions are from the superstructure **only**, acting on the substructure. In the analysis model, such as a GTStrudl, Sap2000, Strudl, Larsa 2000, etc, include the following loads:

- DC: self-weight of the substructure, include pier cap and columns
- TU: a temperature increase and fall on the pier substructure utilizing the following parameters:

coefficient of expansion $\alpha_t = 6 \times 10^{-6} \frac{1}{°F}$

temperature change $temperature_{increase} = temperature_{fall} = 25 \cdot °F$

For instance, in LEAP's RCPier, two load cases would be required for temperature with a positive and negative strain being inputed, equal to: $\alpha_t \cdot (25 \cdot °F) = 0.00015$

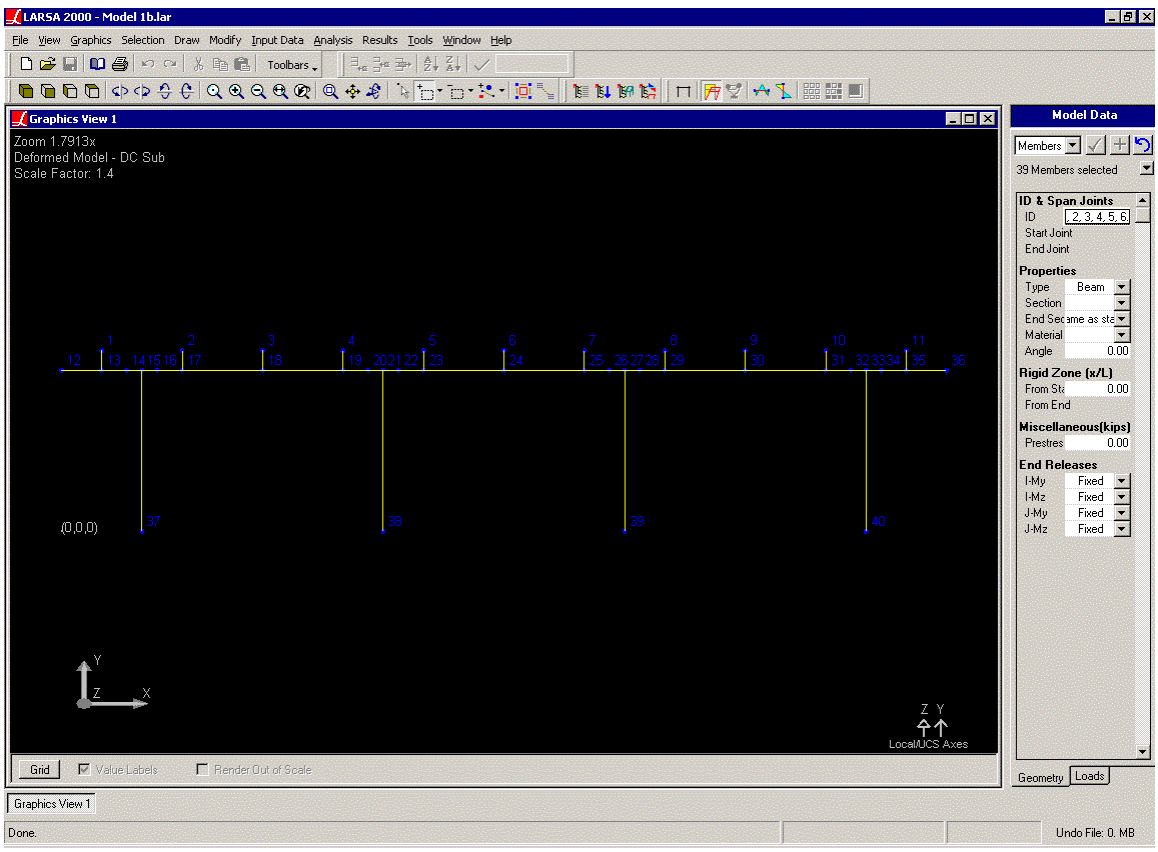

Note that in our model, the loads applied at the top of the cap from the beams are applied to rigid links that transfer the lateral loads as a lateral load and moment at the centroid of the pier cap. This is consistent with substructure design programs like LEAP's RCPier. Fixity of the pier was provided at the bottom of the columns.

- WS: Wind on the substructure should be applied directly to the analysis model. The following is an example of the wind locations and terminology used in our analysis:

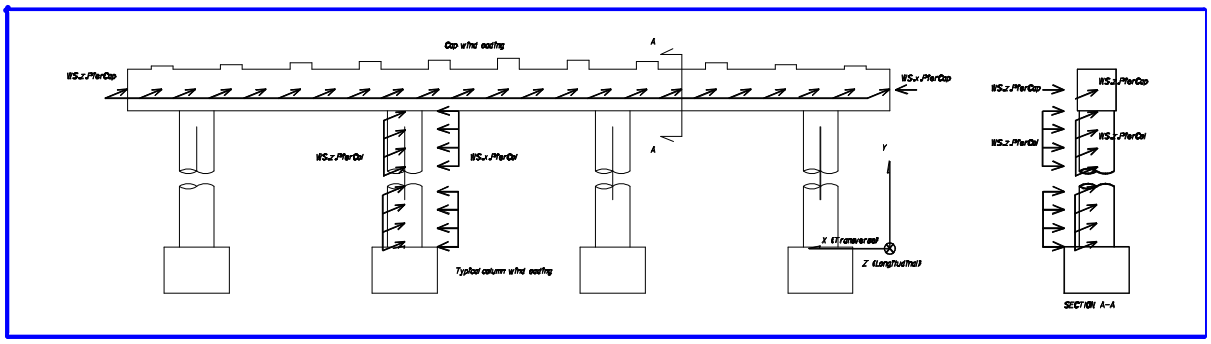

Forces applied directly to the analysis model

- All applied loads in the substructure analysis model should be multiplied by the appropriate load factor values and combined with the limit state loads calculated in this file for the final results.

C1. Strength I Limit State Loads

Strength1 = 1.25·DC + 1.5·DW + 1.75·LL + 1.75BR + 0.50·(TU + CR + SH)

Strength I Limit State									
	+M Loads (kip)			-M Loads (kip)			Overhang -M Loads (kip)		
Beam #	X	Y	Z	X	Y	Z	X	Y	Z
1	-3.3	-246.5	5.8	-3.3	-246.5	5.8	-3.3	-499.5	5.8
2	-3.3	-340.8	5.8	-3.3	-324.7	5.8	-3.3	-317.2	5.8
3	-3.3	-471.4	5.8	-3.3	-435.7	5.8	-3.3	-232.9	5.8
4	-3.3	-415.9	5.8	-3.3	-388.6	5.8	-3.3	-232.9	5.8
5	-3.3	-265.6	5.8	-3.3	-352.4	5.8	-3.3	-232.9	5.8
6	-3.3	-232.0	0.0	-3.3	-377.3	0.0	-3.3	-232.0	0.0
7	0.0	-232.0	0.0	0.0	-234.1	0.0	0.0	-232.0	0.0
8	0.0	-232.0	0.0	0.0	-232.0	0.0	0.0	-232.0	0.0
9	0.0	-232.0	0.0	0.0	-232.0	0.0	0.0	-232.0	0.0
10	0.0	-232.0	0.0	0.0	-232.0	0.0	0.0	-232.0	0.0
11	0.0	-245.7	0.0	0.0	-245.7	0.0	0.0	-245.7	0.0

C2. Strength V Limit State Loads

Strength5 = 1.25·DC + 1.50·DW + 1.35·LL + 1.35·BR + 0.40·WS + 1.0·WL + 0.50·(TU + CR + SH)

	+M Loads (kip)			-M Loads (kip)			Overhang -M Loads (kip)		
Beam #	**X**	**Y**	**Z**	**X**	**Y**	**Z**	**X**	**Y**	**Z**
1	-0.9	-246.3	6.6	-0.9	-246.3	6.6	-0.9	-441.5	6.6
2	-0.9	-305.7	6.6	-0.9	-293.3	6.6	-0.9	-287.5	6.6
3	-0.9	-426.9	6.6	-0.9	-399.4	6.6	-0.9	-242.9	6.6
4	-0.9	-373.9	6.6	-0.9	-352.8	6.6	-0.9	-232.7	6.6
5	-0.9	-257.9	6.6	-0.9	-324.9	6.6	-0.9	-232.7	6.6
6	-0.9	-232.0	2.1	-0.9	-344.1	2.1	-0.9	-232.0	2.1
7	1.7	-232.0	2.1	1.7	-233.6	2.1	1.7	-232.0	2.1
8	1.7	-232.0	2.1	1.7	-232.0	2.1	1.7	-232.0	2.1
9	1.7	-232.0	2.1	1.7	-232.0	2.1	1.7	-232.0	2.1
10	1.7	-232.0	2.1	1.7	-232.0	2.1	1.7	-232.0	2.1
11	1.7	-245.7	2.1	1.7	-245.7	2.1	1.7	-245.7	2.1

Wind Loads Applied to Substructure				
	X (transv)		**Z (long)**	
Pier Cap	-4.05	kip	0.12	klf
Pier Column	0.03	klf	0.10	klf

C3. Service I Limit State Loads

Service1 = 1.0·DC + 1.0·DW + 1.0·LL + 1.0·BR + 0.3WS + 1.0·WL + 1.0·CST

	+M Loads (kip)			-M Loads (kip)			Overhang -M Loads (kip)		
Beam #	**X**	**Y**	**Z**	**X**	**Y**	**Z**	**X**	**Y**	**Z**
1	-0.5	-194.8	5.1	-0.5	-194.8	5.1	-0.5	-339.4	5.1
2	-0.5	-235.6	5.1	-0.5	-226.4	5.1	-0.5	-222.1	5.1
3	-0.5	-330.8	5.1	-0.5	-310.4	5.1	-0.5	-194.5	5.1
4	-0.5	-288.8	5.1	-0.5	-273.2	5.1	-0.5	-184.2	5.1
5	-0.5	-202.9	5.1	-0.5	-252.5	5.1	-0.5	-184.2	5.1
6	-0.5	-183.7	1.8	-0.5	-266.7	1.8	-0.5	-183.7	1.8
7	1.5	-183.7	1.8	1.5	-184.9	1.8	1.5	-183.7	1.8
8	1.5	-183.7	1.8	1.5	-183.7	1.8	1.5	-183.7	1.8
9	1.5	-183.7	1.8	1.5	-183.7	1.8	1.5	-183.7	1.8
10	1.5	-183.7	1.8	1.5	-183.7	1.8	1.5	-183.7	1.8
11	1.5	-194.4	1.8	1.5	-194.4	1.8	1.5	-194.4	1.8

Wind Loads Applied to Substructure				
	X (transv)		**Z (long)**	
Pier Cap	-3.04	kip	0.09	klf
Pier Column	0.02	klf	0.08	klf

C4. Summary of Results

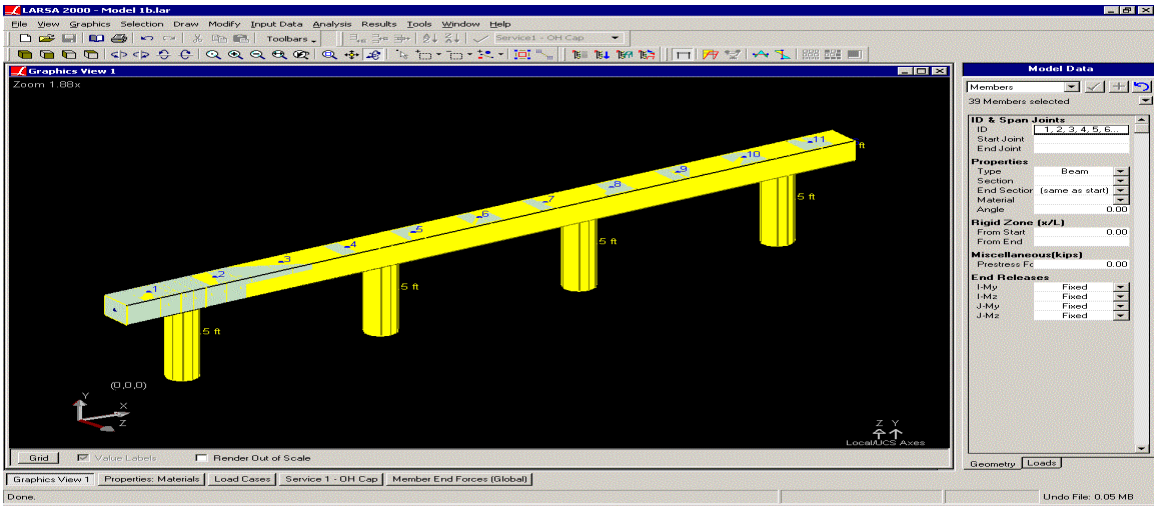

LARSA 2000 RESULTS

Member	Joint	Result Case	Fx	Fy	Fz	Mx	My	Mz	
17	18	Strength 1 - +M Cap -TU	-35.74	-199.75	3.49	-28.01	53.27	2742.47	
17	18	Strength 5 - +M Cap -TU	-22.25	-177.89	3.86	-13.57	59.81	2453.31	
17	18	Service 1 - +M Cap -TU	18.78	-122.36	2.97	-9.12	45.55	1966.55	
20	20	Strength 1 - -M Cap -TU	14.69	-643.41	9.54	45.15	-0.69	2063.12	*
20	21	Strength 1 - -M Cap -TU	-14.69	650.05	-9.54	-45.15	-16.00	-3194.90	
20	20	Strength 5 - -M Cap -TU	13.24	-626.10	10.99	43.48	2.24	2006.73	*
20	21	Strength 5 - -M Cap -TU	-13.24	632.74	-11.20	-43.48	-21.66	-3108.21	
20	20	Service 1 - -M Cap -TU	-26.23	-514.83	8.48	32.24	2.38	1715.77	*
20	21	Service 1 - -M Cap -TU	26.23	520.14	-8.63	-32.24	-17.35	-2621.36	
14	14	Strength 1 - OH Cap -TU	-0.95	-469.94	6.74	14.85	19.33	1375.62	*
14	15	Strength 1 - OH Cap -TU	0.95	476.58	-6.74	-14.85	-31.12	-2203.83	
14	14	Service 1 - OH Cap -TU	-3.65	-362.15	5.90	11.48	17.52	1060.40	*
14	15	Service 1 - OH Cap -TU	3.65	367.47	-6.06	-11.48	-27.99	-1698.82	

NOTES:

(1) Values at face of column (*) used for design. Other node results given represents value at centerline of column.

(2) Values highlighted are governing design loads.

(3) -M cap design govern over overhang moment. Design of overhang will have the same steel as the negative moment requirements within the cap.

(4) (-TU) means load case with a temperature fall in the substructure governed.

Also note that Strength V values do not govern in the design of the pier cap. Only the highlighted values are used for the pier cap design.

Defined Units

Pier Cap Design

References

Reference:F:\HDRDesignExamples\Ex1_PCBeam\303PierCapLds.mcd(R)

Description

This section provides the criteria for the pier cap design.

Page Contents

221 **A. Input Variables**

223 **B. Positive Moment Design**

- **B1. Positive Moment Region Design - Flexural Resistance [LRFD 5.7.3.2]**
- **B2. Limits for Reinforcement [LRFD 5.7.3.3]**
- **B3. Crack Control by Distribution Reinforcement [LRFD 5.7.3.4]**
- **B4. Shrinkage and Temperature Reinforcement [LRFD 5.10.8.2]**
- **B5. Mass Concrete Provisions**

230 **C. Negative Moment Design**

- **C1. Negative Moment Region Design - Flexural Resistance [LRFD 5.7.3.2]**
- **C2. Limits for Reinforcement [LRFD 5.7.3.3]**
- **C3. Crack Control by Distribution Reinforcement [LRFD 5.7.3.4]**

235 **D. Shear and Torsion Design [LRFD 5.8]**

- **D1. Check if Torsion Design is Required**
- **D2. Determine Nominal Shear Resistance**
- **D3. Transverse Reinforcement**
- **D4. Longitudinal Reinforcement**

239 **E. Summary**

A. Input Variables

Material Properties

Unit weight of concrete..... $\gamma_{conc} = 150\,pcf$

Modulus of elasticity for reinforcing steel.. $E_s = 29000\,ksi$

Yield strength for reinforcing steel..... $f_y = 60\,ksi$

Design Parameters

Resistance factor for flexure and tension of reinforced concrete..... $\phi = 0.9$

Resistance factor for shear and torsion (normal weight concrete)..... $\phi_v := 0.90$

Design Lanes

Current lane configurations show two striped lanes per roadway with a traffic median barrier separating the roadways. Using the roadway clear width between barriers, $Rdwy_{width}$, the number of design traffic lanes per roadway, N_{lanes}, can be calculated as:

Roadway clear width..... $Rdwy_{width} = 42\,ft$

Number of design traffic lanes per roadway..... $N_{lanes} = 3$

Florida Design Criteria

Concrete cover for substructure not in contact with water..... $cover_{sub} = 3\,in$

Concrete cover for substructure in contact with water or earth..... $cover_{sub.earth} = 4\,in$

Minimum 28-day compressive strength for cast-in-place substructure..... $f_{c.sub} = 5.5\,ksi$

Modulus of elasticity for cast-in-place substructure..... $E_{c.sub} = 3841\,ksi$

Environmental classification for substructure..... $Environment_{sub} = \text{"Moderately"}$

Note: Epoxy coated reinforcing not allowed on FDOT projects.

Pier Geometry

Height of pier cap..... $h_{Cap} = 4.5\ ft$

Width of pier cap..... $b_{Cap} = 4.5\ ft$

Length of pier cap..... $L_{Cap} = 101.614\ ft$

Length of pier column..... $h_{Col} = 14\ ft$

Column diameter..... $b_{Col} = 4\ ft$

Number of columns..... $n_{Col} = 4$

Surchage (column section in ground)..... $h_{Surcharge} = 2\ ft$

Design Loads - Moments, Shears and Torques

Moment (-M) - Service..... $M_{Service1.neg} = 1715.8\ ft \cdot kip$

Moment (-M) - Strength..... $M_{Strength1.neg} = 2063.1\ ft \cdot kip$

Corresponding Shear (-M) - Strength..... $V_{Strength1.neg} = -643.4\ kip$ ****** See Note 1***

Corresponding Torsion (-M) - Strength..... $T_{Strength1.neg} = 45.2\ ft \cdot kip$

Moment (+M) - Service..... $M_{Service1.pos} = 1966.5\ ft \cdot kip$

Moment (+M) - Strength..... $M_{Strength1.pos} = 2742.5\ ft \cdot kip$

Corresponding Shear (+M) - Strength..... $V_{Strength1.pos} = -199.7\ kip$

Corresponding Torsion (+M) - Strength.... $T_{Strength1.pos} = -28\ ft \cdot kip$

Note 1:
The design for shear on this section utilized the corresponding shear due to moment (-M). By inspection, the loading for maximum shear is similar to the shear produced by the loading for maximum moment (-M) in the cap.

In a design, the engineer will need to make sure that the applied live load maximizes the shear in the cap for design.

B. Positive Moment Design

A few recommendations on bar size and spacing are available to minimize problems during construction.

- Use the same size and spacing of reinforcing for both the negative and positive moment regions. This prevents field errors whereas the top steel is mistakenly placed at the bottom or vice versa.
- If this arrangement is not possible, give preference to maintaining the same spacing between the top and bottom reinforcement. Same grid pattern allows the concrete vibrator to be more effective in reaching the full depth of the cap.

The design procedure consists of calculating the reinforcement required to satisfy the design moment, then checking this reinforcement against criteria for crack control, minimum reinforcement, maximum reinforcement, shrinkage and temperature reinforcement, and distribution of reinforcement. The procedure is the same for both positive and negative moment regions.

$$M_r := M_{Strength1.pos}$$

$$M_r = 2742.5\ ft \cdot kip$$

Factored resistance

$$M_r = \phi \cdot M_n$$

Nominal flexural resistance

$$M_n = A_{ps} \cdot f_{ps} \cdot \left(d_p - \frac{a}{2}\right) + A_s \cdot f_y \cdot \left(d_s - \frac{a}{2}\right) - A'_s \cdot f'_y \cdot \left(d'_s - \frac{a}{2}\right) + 0.85 \cdot f'_c \cdot (b - b_w) \cdot \beta_1 \cdot h_f \cdot \left(\frac{a}{2} - \frac{h_f}{2}\right)$$

For a rectangular, non-prestressed section,

$$M_n = A_s \cdot f_y \cdot \left(d_s - \frac{a}{2}\right)$$

$$a = \frac{A_s \cdot f_y}{0.85 \cdot f'_c \cdot b}$$

B1. Positive Moment Region Design - Flexural Resistance [LRFD 5.7.3.2]

Using variables defined in this example.....

$$M_r = \phi \cdot A_{s.pos} \cdot f_y \cdot \left[d_s - \frac{1}{2} \cdot \left(\frac{A_{s.pos} \cdot f_y}{0.85 \cdot f_{c.slab} \cdot b}\right)\right]$$

where $f_{c.sub} = 5.5\ ksi$

$f_y = 60\ ksi$

$\phi = 0.9$

$h_{Cap} = 54\ in$

$b_{Cap} = 54\ in$

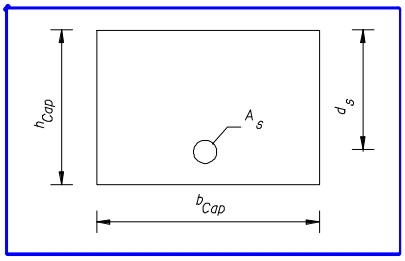

Initial assumption for area of steel required

Number of bars..... $n_{bar} := 12$ *(**Note**: If less than 12-#10 bars are chosen, crack control [Sect B3]will not be satisfied).*

Size of bar..... bar := "10"

Note: if bar spacing is "-1", the spacing is less than 3", and a bigger bar size should be selected.

Bar area..... $A_{bar} = 1.270\,in^2$

Bar diameter..... $dia = 1.270\,in$

Equivalent bar spacing..... $bar_{spa} = 4.3\,in$

Area of steel provided..... $A_s := n_{bar} \cdot A_{bar}$

$A_s = 15.24\,in^2$

Distance from extreme compressive fiber to centroid of reinforcing steel (assuming a #5 stirrup)..... $d_s := h_{Cap} - cover_{sub} - \frac{dia}{2} - \frac{5}{8}in$

$d_s = 49.7\,in$

Solve the quadratic equation for the area of steel required..... Given $M_r = \phi \cdot A_s \cdot f_y \cdot \left[d_s - \frac{1}{2} \cdot \left(\frac{A_s \cdot f_y}{0.85 \cdot f_{c.sub} \cdot b_{Cap}} \right) \right]$

Area of steel required..... $A_{s.reqd} := Find(A_s)$

$A_{s.reqd} = 12.63\,in^2$

The area of steel provided, $A_s = 15.24\,in^2$, should be greater than the area of steel required, $A_{s.reqd} = 12.63\,in^2$. If not, decrease the spacing of the reinforcement. Once A_s is greater than $A_{s.reqd}$, the proposed reinforcing is adequate for the applied moments.

Moment capacity provided..... $M_{r.pos} := \phi \cdot A_s \cdot f_y \cdot \left[d_s - \frac{1}{2} \cdot \left(\frac{A_s \cdot f_y}{0.85 \cdot f_{c.sub} \cdot b_{Cap}} \right) \right]$

$M_{r.pos} = 3287\,ft \cdot kip$

B2. Limits for Reinforcement [LRFD 5.7.3.3]

Maximum Reinforcement

The maximum reinforcement requirements ensure the section has sufficient ductility and is not overreinforced.

Area of steel provided.....

$A_s = 15.24\,in^2$

Stress block factor.....

$\beta_1 := \max\left[0.85 - 0.05\cdot\left(\frac{f_{c.sub} - 4000\cdot psi}{1000\cdot psi}\right), 0.65\right]$

$\beta_1 = 0.775$

Distance from extreme compression fiber to the neutral axis of section.....

$c := \frac{A_s\cdot f_y}{0.85\cdot f_{c.sub}\cdot\beta_1\cdot b_{Cap}}$

$c = 4.7\,in$

Effective depth from extreme compression fiber to centroid of the tensile reinforcement.....

$d_e = \frac{A_{ps}\cdot f_{ps}\cdot d_p + A_s\cdot f_y\cdot d_s}{A_{ps}\cdot f_{ps} + A_s\cdot f_y}$

for non-prestressed sections.....

$d_e := d_s$

$d_e = 49.7\,in$

The $\frac{c}{d_e} = 0.094$ ratio should be less than 0.42 to satisfy maximum reinforcement requirements.

$$LRFD_{5.7.3.3.1} := \begin{cases} \text{"OK, maximum reinforcement requirements for positive moment are satisfied"} & \text{if } \frac{c}{d_e} \le 0.42 \\ \text{"NG, section is over-reinforced, see LRFD equation C5.7.3.3.1-1"} & \text{otherwise} \end{cases}$$

$LRFD_{5.7.3.3.1}$ = "OK, maximum reinforcement requirements for positive moment are satisfied"

Minimum Reinforcement

The minimum reinforcement requirements ensure the moment capacity provided is at least 1.2 times greater than the cracking moment.

Modulus of Rupture.....

$f_r := 0.24\cdot\sqrt{f_{c.sub}\cdot ksi}$

$f_r = 562.8\,psi$

Section modulus of cap.....

$S := \frac{b_{Cap}\cdot h_{Cap}^2}{6}$

$S = 15.2\,ft^3$

Cracking moment.....

$M_{cr} := f_r\cdot S$

$M_{cr} = 1231.0\,kip\cdot ft$

Required flexural resistance..... $M_{r.reqd} := \min(1.2 \cdot M_{cr}, 133 \cdot \% \cdot M_r)$

$M_{r.reqd} = 1477.1\ ft \cdot kip$

Check that the capacity provided, $M_{r.pos} = 3287\ ft \cdot kip$, exceeds minimum requirements, $M_{r.reqd} = 1477.1\ ft \cdot kip$.

$$LRFD_{5.7.3.3.2} := \begin{cases} \text{"OK, minimum reinforcement for positive moment is satisfied"} & \text{if } M_{r.pos} \geq M_{r.reqd} \\ \text{"NG, reinforcement for positive moment is less than minimum"} & \text{otherwise} \end{cases}$$

$LRFD_{5.7.3.3.2} =$ "OK, minimum reinforcement for positive moment is satisfied"

B3. Crack Control by Distribution Reinforcement [LRFD 5.7.3.4]

Concrete is subjected to cracking. Limiting the width of expected cracks under service conditions increases the longevity of the structure. Potential cracks can be minimized through proper placement of the reinforcement. The check for crack control requires that the actual stress in the reinforcement should not exceed the service limit state stress (LRFD 5.7.3.4). The stress equations emphasize bar spacing rather than crack widths.

Stress in the mild steel reinforcement at the service limit state..... $f_{sa} = \dfrac{z}{(d_c \cdot A)^{\frac{1}{3}}} \leq 0.6 \cdot f_y$

Crack width parameter..... $z = \begin{pmatrix} \text{"moderate exposure"} & 170 \\ \text{"severe exposure"} & 130 \\ \text{"buried structures"} & 100 \end{pmatrix} \cdot \dfrac{kip}{in}$

The environmental classifications for Florida designs do not match the classifications to select the crack width parameter. For this example, a "Slightly" or "Moderately" aggressive environment corresponds to "moderate exposure" and an "Extremely" aggressive environment corresponds to "severe exposure".

$Environment_{super} =$ "Slightly" aggressive environment

$z := 170 \cdot \dfrac{kip}{in}$

Distance from extreme tension fiber to center of closest bar (concrete cover need not exceed 2 in.)..... $d_c := \min\left(h_{Cap} - d_s, 2 \cdot in + \dfrac{dia}{2}\right)$

$d_c = 2.635\ in$

Number of bars per design width of slab... $n_{bar} = 12$

Effective tension area of concrete surrounding the flexural tension reinforcement..... $A := \dfrac{(b_{Cap}) \cdot (2 \cdot d_c)}{n_{bar}}$

$A = 23.7\ in^2$

Service limit state stress in reinforcement..

$$f_{sa} := \min\left[\frac{z}{\left(d_c \cdot A\right)^{\frac{1}{3}}}, 0.6 \cdot f_y\right]$$

$f_{sa} = 36.0\,\text{ksi}$

The neutral axis of the section must be determined to determine the actual stress in the reinforcement. This process is iterative, so an initial assumption of the neutral axis must be made.

$x := 12.6 \cdot \text{in}$

Given $\frac{1}{2} \cdot b_{Cap} \cdot x^2 = \frac{E_s}{E_{c.sub}} \cdot A_s \cdot \left(d_s - x\right)$

$x_{na} := \text{Find}(x)$

$x_{na} = 12.6\,\text{in}$

Compare the calculated neutral axis x_{na} with the initial assumption x. If the values are not equal, adjust $x = 12.6\,\text{in}$ to equal $x_{na} = 12.6\,\text{in}$.

Tensile force in the reinforcing steel due to service limit state moment. .....

$$T_s := \frac{M_{Service1.pos}}{d_s - \frac{x_{na}}{3}}$$

$T_s = 518.13\,\text{kip}$

Actual stress in the reinforcing steel due to service limit state moment.....

$$f_{s.actual} := \frac{T_s}{A_s}$$

$f_{s.actual} = 34.0\,\text{ksi}$

The service limit state stress in the reinforcement should be greater than the actual stress due to the service limit state moment.

$$LRFD_{5.7.3.3.4} := \begin{cases} \text{"OK, crack control for positive moment is satisfied"} & \text{if } f_{s.actual} \le f_{sa} \\ \text{"NG, crack control for positive moment not satisfied, provide more reinforcement"} & \text{otherwise} \end{cases}$$

$LRFD_{5.7.3.3.4} = \text{"OK, crack control for positive moment is satisfied"}$

B4. Shrinkage and Temperature Reinforcement [LRFD 5.10.8.2]

Initial assumption for area of steel required

Size of bar..... $bar_{st} := \begin{cases} "5" & \text{if } (b_{Cap} < 48in)\cdot(h_{Cap} < 48in) \\ "6" & \text{otherwise} \end{cases}$

$bar_{st} = "6"$

Spacing of bar..... $bar_{spa.st} := 12\cdot in$

Bar area..... $A_{bar} = 0.44\,in^2$

Bar diameter..... $dia = 0.750\,in$

Gross area of section..... $A_g := b_{Cap}\cdot h_{Cap}$

$A_g = 2916.0\,in^2$

Minimum area of shrinkage and temperature reinforcement..... $A_{shrink.temp} := 0.0015\cdot A_g$

$A_{shrink.temp} = 4.4\,in^2$

Maximum spacing of shrinkage and temperature reinforcement

$$spacing_{shrink.temp} := \begin{cases} \min\left(\dfrac{b_{Cap}}{\dfrac{A_{shrink.temp}}{A_{bar}\cdot 2}}, 12\cdot in\right) & \text{if } (b_{Cap} < 48in)\cdot(h_{Cap} < 48in) \\ \dfrac{100\cdot A_{bar}}{\min(2\cdot d_c + dia, 3in)} & \text{otherwise} \end{cases}$$

$spacing_{shrink.temp} = 14.7\,in$

The bar spacing should be less than the maximum spacing for shrinkage and temperature reinforcement

$$LRFD_{5.7.10.8} := \begin{cases} \text{"OK, minimum shrinkage and temperature requirements"} & \text{if } bar_{spa.st} \le spacing_{shrink.temp} \\ \text{"NG, minimum shrinkage and temperature requirements"} & \text{otherwise} \end{cases}$$

$LRFD_{5.7.10.8} = $ "OK, minimum shrinkage and temperature requirements"

B5. Mass Concrete Provisions

Surface area of pier cap..... $Surface_{cap} := 2 \cdot b_{Cap} \cdot h_{Cap} + (2b_{Cap} + 2h_{Cap}) \cdot L_{Cap}$

$Surface_{cap} = 1869.6\ ft^2$

Volume of pier cap..... $Volume_{cap} := b_{Cap} \cdot h_{Cap} \cdot L_{Cap}$

$Volume_{cap} = 2057.7\ ft^3$

Mass concrete provisions apply if the volume to surface area ratio, $\frac{Volume_{cap}}{Surface_{cap}} = 1.101\ ft$, exceeds 1 ft and any dimension exceeds 3 feet

$$SDG_{3.9} := \begin{cases} \text{"Use mass concrete provisions"} & \text{if } \frac{Volume_{cap}}{Surface_{cap}} > 1.0 \cdot ft \wedge (b_{Cap} > 3ft \vee h_{Cap} > 3ft) \\ \text{"Use regular concrete provisions"} & \text{otherwise} \end{cases}$$

$SDG_{3.9} =$ "Use mass concrete provisions"

C. Negative Moment Design

A few recommendations on bar size and spacing are available to minimize problems during construction.

The same size and spacing of reinforcing should be utilized for both the negative and positive moment regions.

If this arrangement is not possible, the top and bottom reinforcement should be spaced as a multiple of each other. This pattern places the top and bottom bars in the same grid pattern, and any additional steel is placed between these bars.

The design procedure consists of calculating the reinforcement required to satisfy the design moment, then checking this reinforcement against criteria for crack control, minimum reinforcement, maximum reinforcement, shrinkage and temperature reinforcement, and distribution of reinforcement. The procedure is the same for both positive and negative moment regions.

$$M_r := \left|M_{Strength1.neg}\right|$$

$$M_r = 2063.1\ ft \cdot kip$$

Factored resistance

$$M_r = \phi \cdot M_n$$

Nominal flexural resistance

$$M_n = A_{ps} \cdot f_{ps} \cdot \left(d_p - \frac{a}{2}\right) + A_s \cdot f_y \cdot \left(d_s - \frac{a}{2}\right) - A'_s \cdot f'_y \cdot \left(d'_s - \frac{a}{2}\right) + 0.85 \cdot f'_c \cdot (b - b_w) \cdot \beta_1 \cdot h_f \cdot \left(\frac{a}{2} - \frac{h_f}{2}\right)$$

For a rectangular, non-prestressed section,

$$M_n = A_s \cdot f_y \cdot \left(d_s - \frac{a}{2}\right)$$

$$a = \frac{A_s \cdot f_y}{0.85 \cdot f'_c \cdot b}$$

C1. Negative Moment Region Design - Flexural Resistance [LRFD 5.7.3.2]

Using variables defined in this example,

where $f_{c.sub} = 5.5\ ksi$

$f_y = 60\ ksi$

$\phi = 0.9$

$h_{Cap} = 54\ in$

$b_{Cap} = 54\ in$

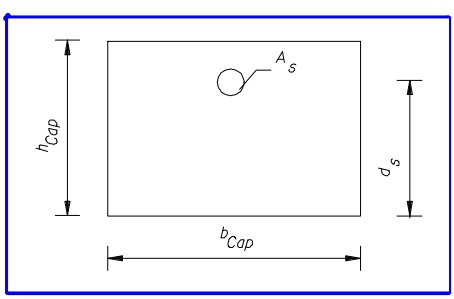

Initial assumption for area of steel required

Number of bars..... $n_{bar} := 10$

Size of bar..... $bar := "10"$

*(**Note**: If 12-#9 bars are chosen, crack control will not be satisfied, see Sect C3. Use 10-#10 bars at the same spacing as the bottom but with two bars missing.)*

Note: if bar spacing is "-1", the spacing is less than 3", and a bigger bar size should be selected.

Bar area..... $A_{bar} = 1.270\,in^2$

Bar diameter..... $dia = 1.270\,in$

Equivalent bar spacing..... $bar_{spa} = 5.2\,in$

Area of steel provided..... $A_s := n_{bar} \cdot A_{bar}$

$A_s = 12.70\,in^2$

Distance from extreme compressive fiber to centroid of reinforcing steel (assuming a #5 stirrup)..... $d_s := h_{Cap} - cover_{sub} - \frac{dia}{2} - \frac{5}{8}in$

$d_s = 49.7\,in$

Solve the quadratic equation for the area of steel required..... Given $M_r = \phi \cdot A_s \cdot f_y \cdot \left[d_s - \frac{1}{2} \cdot \left(\frac{A_s \cdot f_y}{0.85 \cdot f_{c.sub} \cdot b_{Cap}} \right) \right]$

Area of steel required..... $A_{s.reqd} := Find(A_s)$

$A_{s.reqd} = 9.43\,in^2$

The area of steel provided, $A_s = 12.70\,in^2$, should be greater than the area of steel required, $A_{s.reqd} = 9.43\,in^2$. If not, decrease the spacing of the reinforcement. Once A_s is greater than $A_{s.reqd}$, the proposed reinforcing is adequate for the applied moments.

Moment capacity provided..... $M_{r.neg} := \phi \cdot A_s \cdot f_y \cdot \left[d_s - \frac{1}{2} \cdot \left(\frac{A_s \cdot f_y}{0.85 \cdot f_{c.sub} \cdot b_{Cap}} \right) \right]$

$M_{r.neg} = 2756.4\,ft \cdot kip$

C2. Limits for Reinforcement [LRFD 5.7.3.3]

Maximum Reinforcement

The maximum reinforcement requirements ensure the section has sufficient ductility and is not overreinforced.

Area of steel provided.....

$A_s = 12.70\,in^2$

Stress block factor..... $\beta_1 := \max\left[0.85 - 0.05\cdot\left(\frac{f_{c.sub} - 4000\cdot psi}{1000\cdot psi}\right), 0.65\right]$

$\beta_1 = 0.775$

Distance from extreme compression fiber to the neutral axis of section..... $c := \frac{A_s\cdot f_y}{0.85\cdot f_{c.sub}\cdot\beta_1\cdot b_{Cap}}$

$c = 3.9\,in$

Effective depth from extreme compression fiber to centroid of the tensile reinforcement..... $d_e = \frac{A_{ps}\cdot f_{ps}\cdot d_p + A_s\cdot f_y\cdot d_s}{A_{ps}\cdot f_{ps} + A_s\cdot f_y}$

for non-prestressed sections..... $d_e := d_s$

$d_e = 49.7\,in$

The $\frac{c}{d_e} = 0.078$ ratio should be less than 0.42 to satisfy maximum reinforcement requirements.

$$LRFD_{5.7.3.3.1} := \begin{cases} \text{"OK, maximum reinforcement requirements for negative moment are satisfied"} & \text{if } \frac{c}{d_e} \le 0.42 \\ \text{"NG, section is over-reinforced, see LRFD equation C5.7.3.3.1-1"} & \text{otherwise} \end{cases}$$

$LRFD_{5.7.3.3.1}$ = "OK, maximum reinforcement requirements for negative moment are satisfied"

Minimum Reinforcement

The minimum reinforcement requirements ensure the moment capacity provided is at least 1.2 times greater than the cracking moment.

Modulus of Rupture..... $f_r := 0.24\cdot\sqrt{f_{c.sub}\cdot ksi}$

$f_r = 562.8\,psi$

Distance from the extreme tensile fiber to the neutral axis of the composite section... $y := \frac{h_{Cap}}{2}$

$y = 27.0\,in$

Moment of inertia for the section..... $I_{cap} := \frac{1}{12}\cdot b_{Cap}\cdot h_{Cap}^3$

$I_{cap} = 34.2\,ft^4$

Section modulus of cap..... $S := \frac{b_{Cap}\cdot h_{Cap}^2}{6}$

$S = 15.2\,ft^3$

Cracking moment..... $M_{cr} := f_r\cdot S$

$M_{cr} = 1231.0\,kip\cdot ft$

Required flexural resistance..... $M_{r.reqd} := \min(1.2 \cdot M_{cr}, 133 \cdot \% \cdot M_r)$

$M_{r.reqd} = 1477.1\ ft \cdot kip$

Check that the capacity provided, $M_{r.neg} = 2756.4\ ft \cdot kip$, exceeds minimum requirements, $M_{r.reqd} = 1477.1\ ft \cdot kip$.

$$LRFD_{5.7.3.3.2} := \begin{cases} \text{"OK, minimum reinforcement for negative moment is satisfied"} & \text{if } M_{r.neg} \geq M_{r.reqd} \\ \text{"NG, reinforcement for negative moment is less than minimum"} & \text{otherwise} \end{cases}$$

$LRFD_{5.7.3.3.2} = \text{"OK, minimum reinforcement for negative moment is satisfied"}$

C3. Crack Control by Distribution Reinforcement [LRFD 5.7.3.4]

Concrete is subjected to cracking. Limiting the width of expected cracks under service conditions increases the longevity of the structure. Potential cracks can be minimized through proper placement of the reinforcement. The check for crack control requires that the actual stress in the reinforcement should not exceed the service limit state stress (LRFD 5.7.3.4). The stress equations emphasize bar spacing rather than crack widths.

Stress in the mild steel reinforcement at the service limit state.....

$$f_{sa} = \frac{z}{(d_c \cdot A)^{\frac{1}{3}}} \leq 0.6 \cdot f_y$$

Crack width parameter.....

$$z = \begin{pmatrix} \text{"moderate exposure"} & 170 \\ \text{"severe exposure"} & 130 \\ \text{"buried structures"} & 100 \end{pmatrix} \cdot \frac{kip}{in}$$

The environmental classifications for Florida designs do not match the classifications to select the crack width parameter. For this example, a "Slightly" or "Moderately" aggressive environment corresponds to "moderate exposure" and an "Extremely" aggressive environment corresponds to "severe exposure".

$Environment_{super} = \text{"Slightly"}$

$z := 170 \cdot \frac{kip}{in}$

Distance from extreme tension fiber to center of closest bar (concrete cover need not exceed 2 in.).....

$$d_c := \min\left(h_{Cap} - d_s, 2 \cdot in + \frac{dia}{2}\right)$$

$d_c = 2.635\ in$

Number of bars per design width of slab...

$n_{bar} = 10$

Effective tension area of concrete surrounding the flexural tension reinforcement.....

$$A := \frac{(b_{Cap})\cdot(2\cdot d_c)}{n_{bar}}$$

$A = 28.5\,in^2$

Service limit state stress in reinforcement..

$$f_{sa} := \min\left[\frac{z}{(d_c\cdot A)^{\frac{1}{3}}}, 0.6\cdot f_y\right]$$

$f_{sa} = 36.0\,ksi$

The neutral axis of the section must be determined to determine the actual stress in the reinforcement. This process is iterative, so an initial assumption of the neutral axis must be made.

$x := 11.6\cdot in$

Given $\frac{1}{2}\cdot b_{Cap}\cdot x^2 = \frac{E_s}{E_{c.sub}}\cdot A_s\cdot(d_s - x)$

$x_{na} := \text{Find}(x)$

$x_{na} = 11.6\,in$

Compare the calculated neutral axis x_{na} with the initial assumption x. If the values are not equal, adjust $x = 11.6\,in$ to equal $x_{na} = 11.6\,in$.

Tensile force in the reinforcing steel due to service limit state moment. .....

$$T_s := \frac{|M_{Service1.neg}|}{d_s - \frac{x_{na}}{3}}$$

$T_s = 448.9\,kip$

Actual stress in the reinforcing steel due to service limit state moment.....

$$f_{s.actual} := \frac{T_s}{A_s}$$

$f_{s.actual} = 35.3\,ksi$

The service limit state stress in the reinforcement should be greater than the actual stress due to the service limit state moment.

$$LRFD_{5.7.3.3.4} := \begin{cases} \text{"OK, crack control for positive moment is satisfied"} & \text{if } f_{s.actual} \le f_{sa} \\ \text{"NG, crack control for positive moment not satisfied, provide more reinforcement"} & \text{otherwise} \end{cases}$$

$LRFD_{5.7.3.3.4}$ = "OK, crack control for positive moment is satisfied"

D. Shear and Torsion Design [LRFD 5.8]

D1. Check if Torsion Design is Required

$T_u := \left|T_{Strength1.neg}\right|$ $\qquad$ $V_u := \left|V_{Strength1.neg}\right|$

For normal weight concrete, torsional effects shall be investigated if..... $\quad T_u > 0.25 \cdot \phi_v \cdot T_{cr}$

and..... $\quad T_{cr} = 0.125 \cdot \sqrt{f_c} \cdot \frac{A_{cp}^2}{p_c} \cdot \sqrt{1 + \frac{f_{pc}}{0.125 \cdot \sqrt{f_c}}}$

Total area enclosed by outside perimeter of concrete cross section..... $\quad A_{cp} := h_{Cap} \cdot b_{Cap}$

$A_{cp} = 20.3\,ft^2$

Length of outside perimeter of cross section..... $\quad p_c := 2 \cdot \left(h_{Cap} + b_{Cap}\right)$

$p_c = 18.0\,ft$

Compressive stress in concrete after prestress losses have occured.....

$f_{pc} := 0 \cdot psi$

Torsional cracking moment..... $\quad T_{cr} := 0.125 \cdot \sqrt{f_{c.sub} \cdot ksi} \cdot \frac{A_{cp}^2}{p_c} \cdot \sqrt{1 + \frac{f_{pc}}{0.125 \cdot \sqrt{f_{c.sub} \cdot ksi}}}$

$T_{cr} = 961.7\,kip \cdot ft$

$$LRFD_{5.8.2} := \begin{cases} \text{"OK, torsion can be neglected"} & \text{if } 0.25 \cdot \phi_v \cdot T_{cr} \geq T_u \\ \text{"NG, torsion shall be investigated..."} & \text{otherwise} \end{cases}$$

$LRFD_{5.8.2} = \text{"OK, torsion can be neglected"}$

D2. Determine Nominal Shear Resistance

Effective width of the section..... $\quad b_v := b_{Cap}$

$b_v = 54.0\,in$

Effective shear depth..... $\quad a := \frac{A_s \cdot f_y}{0.85 \cdot f_{c.sub} \cdot b_{Cap}}$

$a = 3.018\,in$

$d_v = 48.2\,in$ $\qquad$ $d_v := \max\left(d_s - \frac{a}{2}, 0.9 \cdot d_s, 0.72 \cdot h_{Cap}\right)$

Determination of β and θ **(LRFD 5.8.3.4)**

The pier cap is a non-prestressed concrete section not subjected to axial tension. It should also have the least amount of transverse reinforcement specified in **LRFD 5.8.2.5** or an overall depth of less than 16 in.

$\beta := 2$

$\theta := 45 \cdot deg$

Nominal shear resistance of concrete section..... $V_c := 0.0316 \cdot \beta \cdot \sqrt{f_{c.sub} \cdot ksi} \cdot b_v \cdot d_v$

$V_c = 386.0\,kip$

D3. Transverse Reinforcement

Transverse reinforcement shall be provided in the pier cap according to **LRFD 5.8.2.4.**

$V_u > 0.5 \cdot \phi_v \cdot (V_c + V_p)$

The pier cap has no prestressing.

$V_p := 0 \cdot kip$

Is transverse reinforcement required?

$$LRFD_{5.8.2.4} := \begin{cases} \text{" Transverse reinforcement shall be provided"} & \text{if } V_u > 0.5 \cdot \phi_v \cdot (V_c + V_p) \\ \text{" Transverse reinforcement not required, provide minimum reinforcement"} & \text{otherwise} \end{cases}$$

$LRFD_{5.8.2.4} =$ " Transverse reinforcement shall be provided"

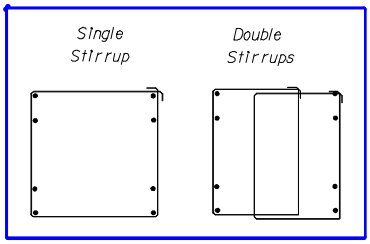

Stirrups

Size of stirrup bar ("4" "5" "6" "7")... bar := "5"

Number of stirrup bars ("single" "double") ..... n_{bar} := "double"

Area of shear reinforcement..... $A_v = 1.240\,in^2$

Diameter of shear reinforcement..... $dia = 0.625\,in$

Nominal shear strength provided by shear reinforcement

$V_n = V_c + V_p + V_s$

where..... $V_n := \min\left(\frac{V_u}{\phi_v}, 0.25 \cdot f_{c.sub} \cdot b_v \cdot d_v + V_p\right)$

$V_n = 714.9\,kip$

and..... $V_s := V_n - V_c - V_p$

$V_s = 328.9\,kip$

Spacing of stirrups

Minimum transverse reinforcement..... $s_{min} := \frac{A_v \cdot f_y}{0.0316 \cdot b_v \cdot \sqrt{f_{c.sub} \cdot ksi}}$

$s_{min} = 18.6\,in$

Transverse reinforcement required..... $s_{req} := if\left(V_s \le 0, s_{min}, \frac{A_v \cdot f_y \cdot d_v \cdot \cot(\theta)}{V_s}\right)$

$s_{req} = 10.9\,in$

Minimum transverse reinforcement required..... $s := \min(s_{min}, s_{req})$

$s = 10.9\,in$

Maximum transverse reinforcement

$$s_{max} := if\left[\frac{V_u - \phi_v \cdot V_p}{\phi_v \cdot (b_v \cdot d_v)} < 0.125 \cdot f_{c.sub}, \min(0.8 \cdot d_v, 24 \cdot in), \min(0.4 \cdot d_v, 12 \cdot in)\right]$$

$s_{max} = 24\,in$

Spacing of transverse reinforcement cannot exceed the following spacing..... $spacing := if(s_{max} > s, s, s_{max})$

$spacing = 10.9\,in$

D4. Longitudinal Reinforcement

General equation for force in longitudinal reinforcement

$$T = \frac{M_u}{d_v \cdot \phi_b} + \left(\frac{V_u}{\phi_v} - 0.5 \cdot V_s - V_p\right) \cdot \cot(\theta)$$

where.....

$V_s = 328.9\,kip$

$$V_s := \min\left(\frac{A_v \cdot f_y \cdot d_v \cdot \cot(\theta)}{spacing}, \frac{V_u}{\phi_v}\right)$$

and.....

$T = 1308.6\,kip$

$$T := \frac{M_{Strength1.pos}}{d_v \cdot \phi} + \left(\frac{V_u}{\phi_v} - 0.5 \cdot V_s - V_p\right) \cdot \cot(\theta)$$

Longitudinal reinforcement, previously computed for positive moment design.....

$A_{s.posM} = 15.2\,in^2$

Equivalent force provided by this steel.....

$T_{posM} := A_{s.posM} \cdot f_y$

$T_{posM} = 914.4\,kip$

$$LRFD_{5.8.3.5} := \begin{cases} \text{"Ok, positive moment longitudinal reinforcement is adequate"} & \text{if } T_{posM} \geq T \\ \text{"NG, positive moment longitudinal reinforcement provided"} & \text{otherwise} \end{cases}$$

$LRFD_{5.8.3.5} =$ "NG, positive moment longitudinal reinforcement provided"

***Note**: These provisions are applicable at the end bearing support areas. In both positive and negative moment areas in the cap, the applied loads produce compression on the compression face, therefore the steel provided needs to satisfy moment only. Therefore, this check is ignored.*

E. Summary of Reinforcement Provided in the Moment Region

Negative moment (top) reinforcement

Bar size..... bar_{negM} = "10"

Number of bars.. $n_{bar.negM}$ = 10

Bar spacing..... $bar_{spa.negM}$ = 4.3 in

Positive moment (bottom) reinforcement

Bar size..... bar_{posM} = "10"

Number of bars.. $n_{bar.posM}$ = 12

Bar spacing..... $bar_{spa.posM}$ = 4.3 in

Transverse reinforcement

Bar size..... bar = "5"

Bar spacing..... spacing = 10.9 in

Type of stirrups. n_{bar} = "double"

Temperature and Shrinkage

Bar size..... $bar_{shrink.temp}$ = "6"

Bar spacing..... $bar_{spa.st}$ = 12 in

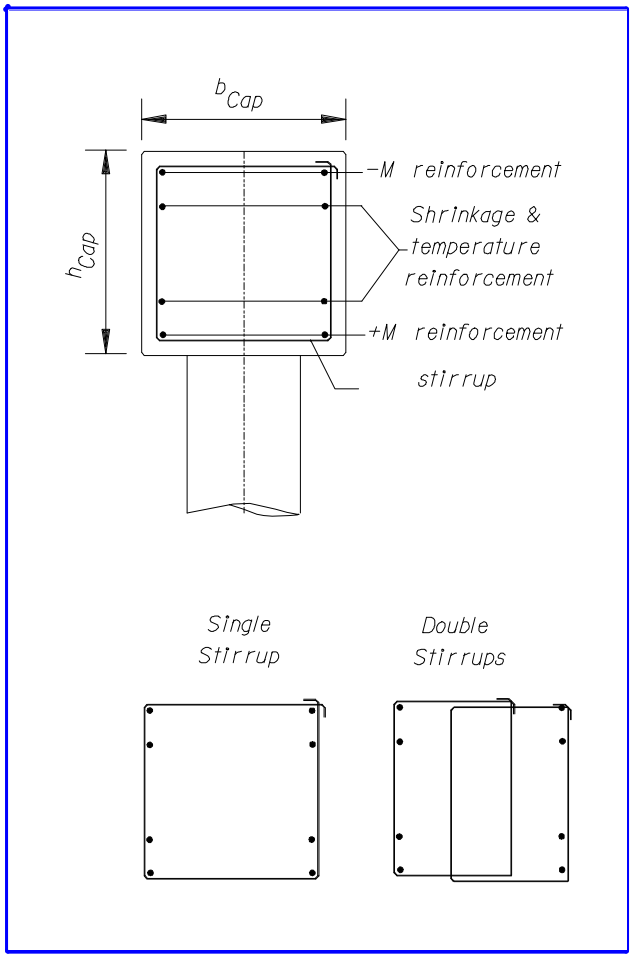

Defined Units

Pier Column Live Load Analysis

References

Reference:F:\HDRDesignExamples\Ex1_PCBeam\304PierCap.mcd(R)

Description

This section provides the pier column design live load for (1) maximum axial load on Pier 2 column and (2) maximum moments on column.

Page Contents

241 **A. Input Variables**

A1. Shear: Skewed Modification Factor [LRFD 4.6.2.2.3c]

A2. Maximum Live Load Reaction at Intermediate Pier - Two HL-93 vehicles

A3. Dynamic Load Allowance [LRFD 3.6.2]

242 **B. Maximum Axial Force**

B1. Influence Lines for the Pier Column

B2. HL-93 vehicle placement for maximum axial load

245 **C. Maximum Negative Live Load Moment**

C1. Influence Lines for the maximum negative pier cap moment

C2. HL-93 vehicle placement for maximum moment

A. Input Variables

A1. Shear: Skewed Modification Factor [LRFD 4.6.2.2.3c]

Skew modification factor for shear **shall** be applied to the exterior beam at the obtuse corner (θ>90 deg) and to all beams in a multibeam bridge, whereas $g_{v.Skew} = 1.086$.

A2. Maximum Live Load Reaction at Intermediate Pier - Two HL-93 Vehicles

The reaction, $R_{LLIs} = 148.0\,kip$, needs to be separated into the truck and lane components in order to determine the beam reactions due to various vehicle placements along the deck.

Reaction induced by HL-93 truck load..... $R_{trucks} = 80.3\,kip$

Reaction induced by lane load..... $R_{lanes} = 57.6\,kip$

Impact factor..... $IM = 1.33$

The truck reaction (including impact and skew modification factors) is applied on the deck as two wheel-line loads.....

$$wheel_{line} := 90\% \cdot \left(\frac{R_{trucks} \cdot IM}{2} \right) \cdot g_{v.Skew}$$

$$wheel_{line} = 52.2\,kip$$

The lane load reaction (including skew modification factor) is applied on the deck as a distributed load over the 10 ft lane.....

$$lane_{load} := 90\% \cdot \left(\frac{R_{lanes}}{10 \cdot ft} \right) \cdot g_{v.Skew}$$

$$lane_{load} = 5.6\,\frac{kip}{ft}$$

The truck wheel-line load and lane load can be placed in design lanes according to one of the following patterns.

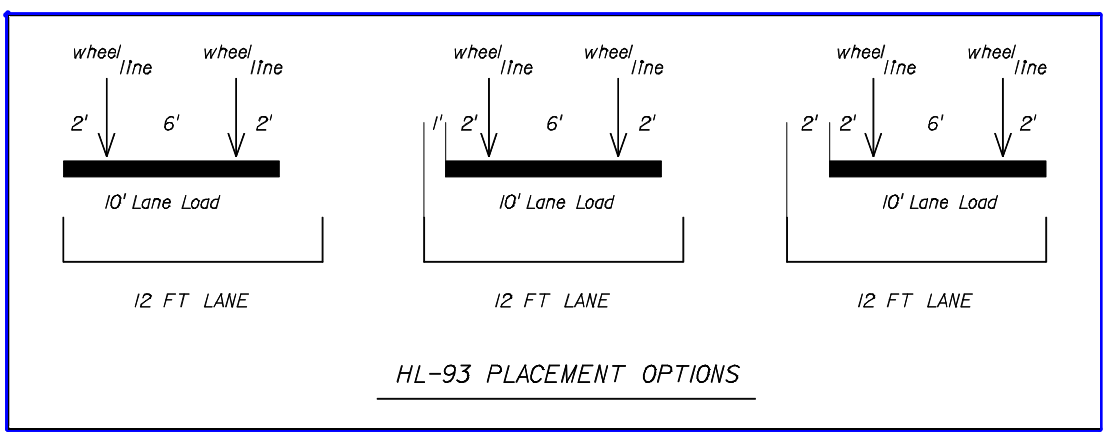

B. Maximum Axial Force

For design live load moments in the pier column, the controlling number and position of design lanes needs to be determined. This section shows a means of determining the controlling configuration of design lanes, along with the corresponding beam loads and pier cap moments.

B1. Influence Lines for the Pier Column

The influence lines will help determine the placement of design lanes on the deck to maximize the axial force in pier column 2. In this example, Larsa 2000 was used to generate the influence lines.

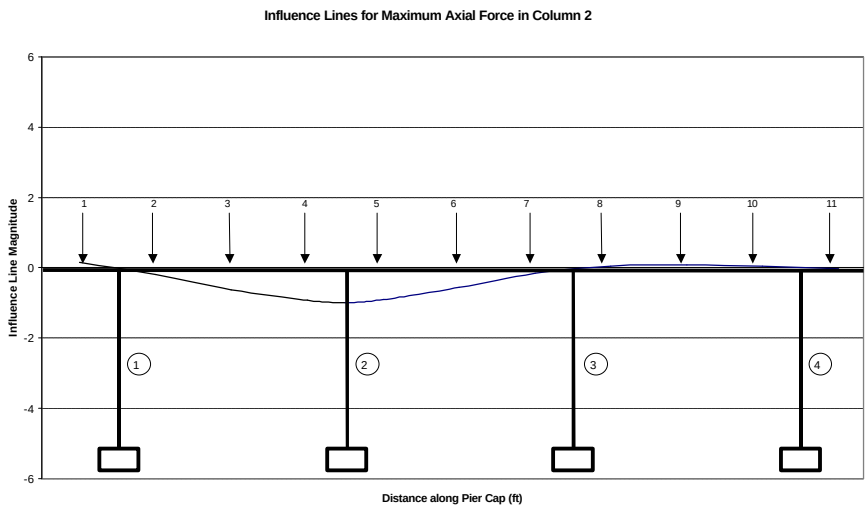

Influence Lines
Maximum Axial Force at Column 2

Beam	Distance	Influence Line Magnitude (Column axial)
1	4.6	0.15
2	13.9	-0.20
3	23.1	-0.62
4	32.3	-0.93
Col 2	37.0	-1.00
5	41.6	-0.91
6	50.8	-0.56
7	60.1	-0.16
8	69.3	0.05
9	78.5	0.09
10	87.8	0.04
11	97.0	-0.03

B2. HL-93 Vehicle Placement for Maximum Axial Load

HL-93 vehicles, comprising of wheel line loads and lane loads, should be placed on the deck to maximize the axial load in the pier column.

Design Lane Placements

For this example, the lane placements should maximize the axial force in column 2. Referring to the influence line graph, lanes placed above beams 2, 3, 4, 5, 6, 7, and 11 will contribute to the maximum axial force. Beams 4 and 5 are the most influential. The graph also shows that lanes placed above beams 1, 8, 9, and 10 will reduce the maximum axial force. From this information, several possible configurations for 1, 2, 3, and 4 lanes can be developed to maximize the axial force in column 2.

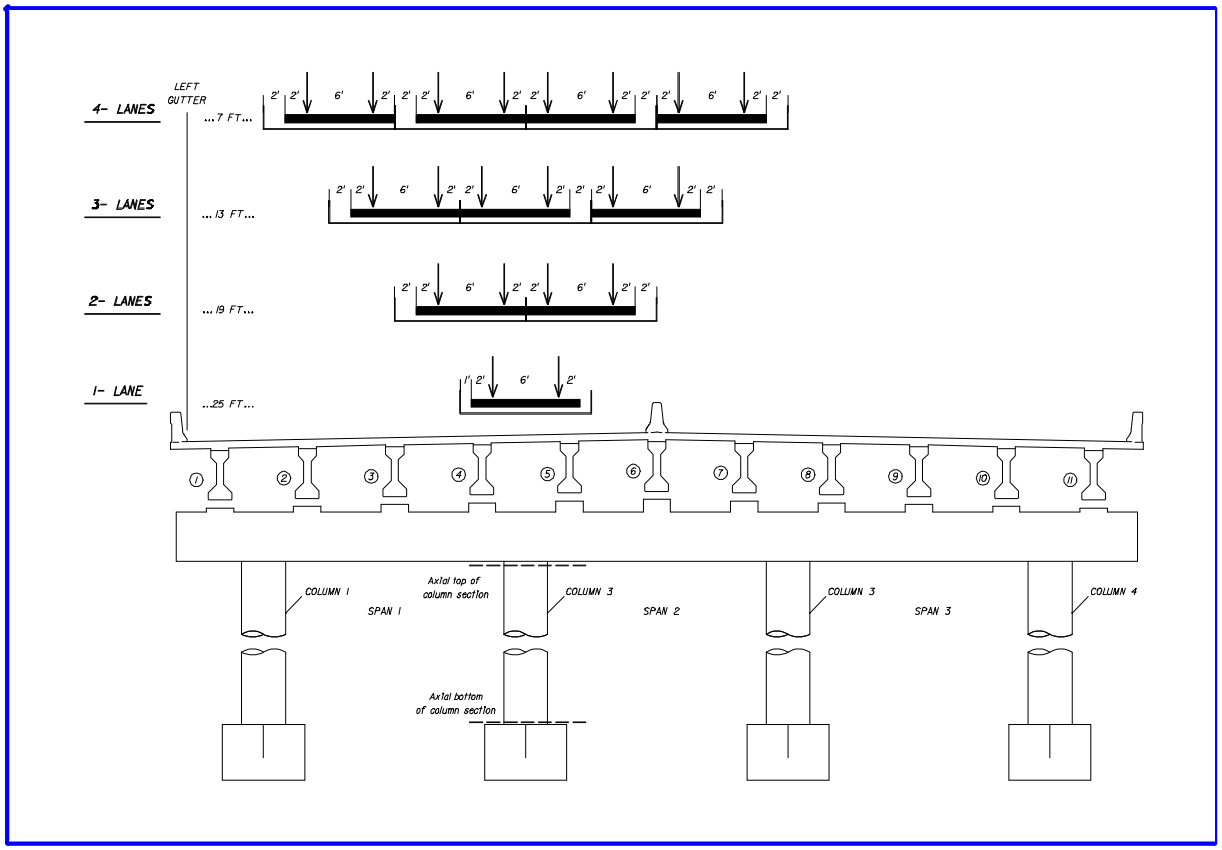

Depending on the number of design lanes, a multiple presence factor (LRFD Table 3.6.1.1.2-1) is applied to the HL-93 wheel line loads and lane load.

$$\text{MPF} = \begin{cases} 1.2 & \text{if Number_of_lanes} = 1 \\ 1.0 & \text{if Number_of_lanes} = 2 \\ 0.85 & \text{if Number_of_lanes} = 3 \\ 0.65 & \text{if Number_of_lanes} \geq 4 \end{cases}$$

Corresponding Beam Loads

The live loads from the design lanes are transferred to the substructure through the beams. Utilizing the lever rule, the beam loads corresponding to the design lane configurations are calculated and multiplied by the multiple presence factors.

Beam	1 Lane	2 Lanes	3 Lanes	4 Lanes
1	0	0	0	0.9
2	0	0	15.9	63.4
3	0.4	38.8	89	65.3
4	96	121.9	115.9	79.3
5	96	121.9	85.4	79.3
6	0.4	38.8	87.8	65.3
7	0	0	15.9	63.4
8	0	0	0	0.9
9	0	0	0	0
10	0	0	0	0
11	0	0	0	0

Corresponding Moments

The axial forces and moments in the pier column corresponding to the beam loads were determined using Larsa 2000.

	Maximum Axial Force	
	Axial Force (k)	Moment (k-ft)
1 Lane	-191.7	-6.4
2 Lanes	-292.4	-15.0
3 Lanes	-320.1	-34.8
4 Lanes	-265.8	-24.3

The results show that three design lanes govern. The following beam loads, corresponding to the governing maximum axial force, will be used in the limit state combinations to obtain the design values for the pier column.

UNFACTORED LIVE LOAD (causing axial) AT PIER COLUMN 2			
	LL Loads (kip)		
Beam	x	y	z
1	0.0	0.0	0.0
2	0.0	-15.9	0.0
3	0.0	-89.0	0.0
4	0.0	-115.9	0.0
5	0.0	-85.4	0.0
6	0.0	-87.8	0.0
7	0.0	-15.9	0.0
8	0.0	0.0	0.0
9	0.0	0.0	0.0
10	0.0	0.0	0.0
11	0.0	0.0	0.0

C. Maximum Negative Live Load Moment

C1. Influence Lines for the maximum negative pier cap moment

The influence lines will help determine the placement of design lanes on the deck to maximize the transverse moments at the top of pier column 2. In this example, Larsa 2000 was used to generate the influence lines.

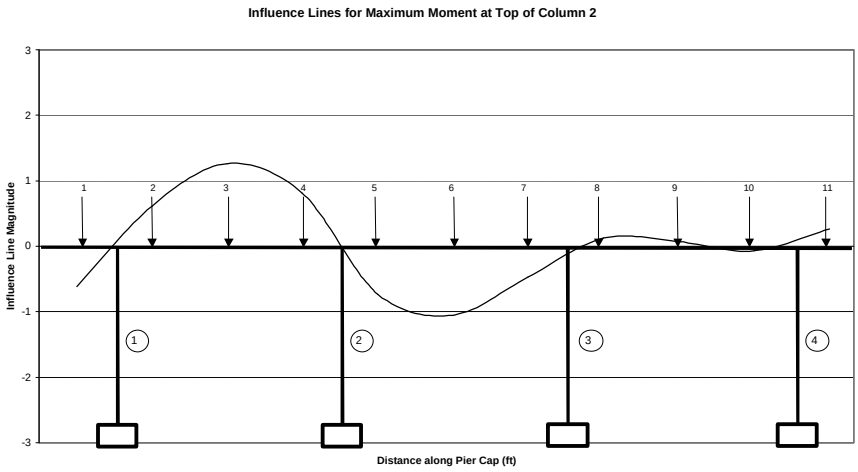

Influence Lines
Maximum Moment at Top of Column 2

Beam	Distance	Influence Line Magnitude
1	4.6	-0.62
2	13.9	0.62
3	23.1	1.27
4	32.3	0.81
5	41.6	-0.73
6	50.8	-1.05
7	60.1	-0.47
8	69.3	0.13
9	78.5	0.07
10	87.8	-0.07
11	97.0	0.26

C2. HL-93 Vehicle Placement for Maximum Moment

HL-93 vehicles, comprising of wheel line loads and lane loads, should be placed on the deck to maximize the moments in the pier column.

Design Lane Placements

For this example, the lane placements should maximize the moment in column 2. Referring to the influence lines graph, lanes placed above beams 2, 3, 4, 8, 9, and 11 will contribute to the maximum positive moment. Beam 3 is the most influential, followed by beam 4. The graph also shows that lanes placed above beams 1, 5, 6, 7, and 10 will reduce the maximum positive moment. From this information, several possible configurations for 1, 2, and 3 lanes can be developed to maximize the moment in column 2.

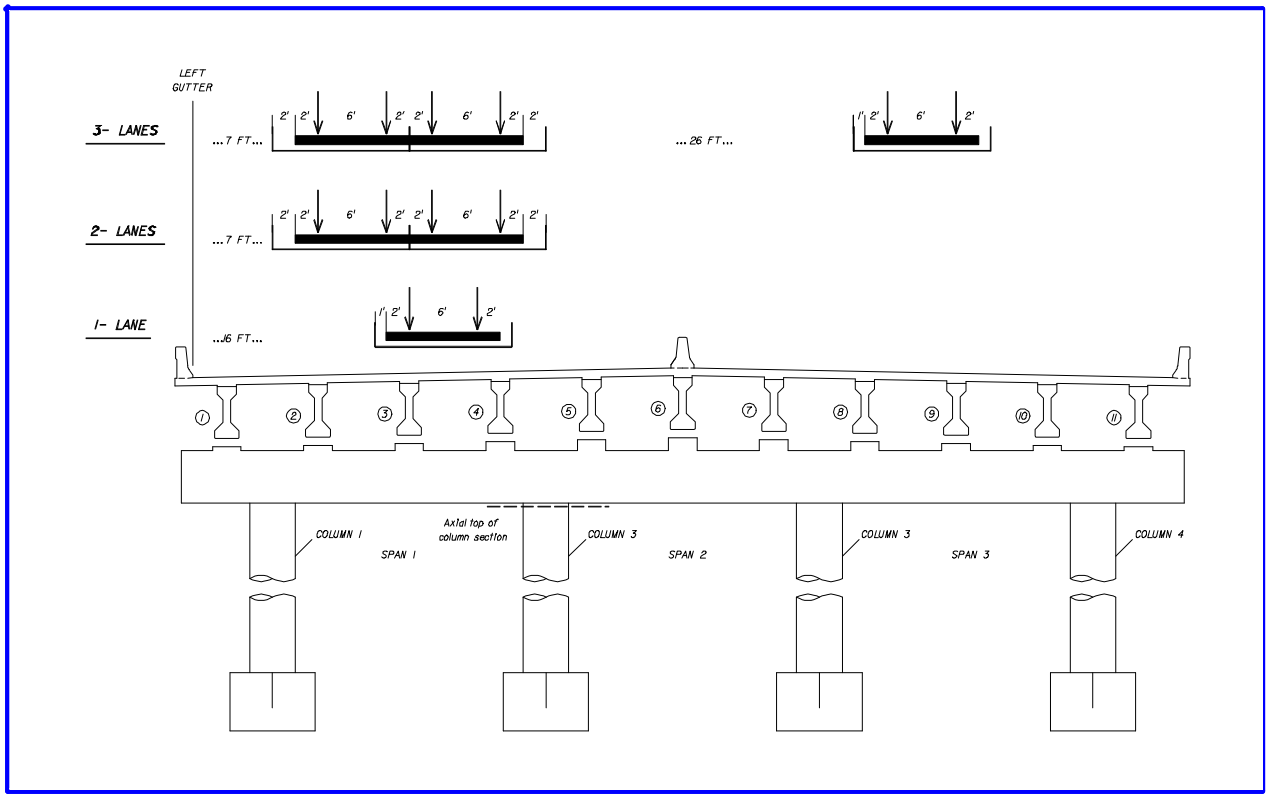

Corresponding Beam Loads

The live loads from the design lanes are transferred to the substructure through the beams. Utilizing the lever rule, the beam loads corresponding to the design lane configurations are calculated and multiplied by the multiple presence factors.

	Beam Loads		
Beam	**1 Lane**	**2 Lanes**	**3 Lanes**
1	**0**	**1.4**	**1.2**
2	**1.7**	**97.7**	**83**
3	**117.1**	**123.3**	**104.8**
4	**74**	**97.7**	**83**
5	**0**	**1.4**	**1.2**
6	**0**	**0**	**0**
7	**0**	**0**	**0.3**
8	**0**	**0**	**68**
9	**0**	**0**	**68**
10	**0**	**0**	**0.3**
11	**0**	**0**	**0**

Corresponding Moments

The axial forces and moments in the pier column corresponding to the beam loads were determined using Larsa 2000.

	Maximum Moment	
	Axial Force (k)	Moment (k-ft)
1 Lane	-153.3	-104.6
2 Lanes	-202.9	-153.2
3 Lanes	-162.8	-132.5

The results show that two design lanes govern. The following beam loads, corresponding to the governing maximum axial force, will later be used in the limit state combinations to obtain the design values for the pier column.

UNFACTORED LIVE LOAD (causing moment) AT PIER COLUMN 2			
	LL Loads (kip)		
Beam	x	y	z
1	0.0	-1.4	0.0
2	0.0	-97.7	0.0
3	0.0	-123.3	0.0
4	0.0	-97.7	0.0
5	0.0	-1.4	0.0
6	0.0	0.0	0.0
7	0.0	0.0	0.0
8	0.0	0.0	0.0
9	0.0	0.0	0.0
10	0.0	0.0	0.0
11	0.0	0.0	0.0

Defined Units

Pier Column Design Loads

Reference

Reference:F:\HDRDesignExamples\Ex1_PCBeam\305PierColLL.mcd(R)

Description

This section provides the design parameters necessary for the substructure pier column design. The loads calculated in this file are only from the superstructure. Substructure self-weight, wind on substructure and uniform temperature on substructure can be generated by the substructure analysis model/program chosen by the user. For this design example, Larsa 2000 was chosen as the analysis model/program (http://www.larsausa.com)

Page Contents

249 **LRFD Criteria**

251 **A. General Criteria**

A1. Load Summary

255 **B. Design Limit States**

B1. Strength I Limit State

B2. Strength III Limit State

B3. Strength V Limit State

LRFD Criteria

STRENGTH I - Basic load combination relating to the normal vehicular use of the bridge without wind.

$WA = 0$ For superstructure design, water load and stream pressure are not applicable.

$FR = 0$ No friction forces.

TU Uniform temperature load effects on the pier will be generated by the substructure analysis model (Larsa 2000).

$$Strength1 = 1.25 \cdot DC + 1.50 \cdot DW + 1.75 \cdot LL + 0.50 \cdot (TU + CR + SH)$$

STRENGTH II - Load combination relating to the use of the bridge by Owner-specified special design vehicles, evaluation permit vehicles, or both without wind.

"Permit vehicles are not evaluated in this design example"

STRENGTH III - Load combination relating to the bridge exposed to wind velocity exceeding 55 MPH.

$$Strength3 = 1.25 \cdot DC + 1.50 \cdot DW + 1.40 \cdot WS + 0.50 \cdot (TU + CR + SH)$$

STRENGTH IV - Load combination relating to very high dead load to live load force effect ratios.

"Not applicable for the substructure design in this design example"

STRENGTH V - Load combination relating to normal vehicular use of the bridge with wind of 55 MPH velocity.

$$Strength5 = 1.25 \cdot DC + 1.50 \cdot DW + 1.35 \cdot LL + 1.35 \cdot BR + 0.40 \cdot WS + 1.0 \cdot WL \ldots + 0.50 \cdot (TU + CR + SH)$$

EXTREME EVENT I - Load combination including earthquake.

"Not applicable for this simple span prestressed beam bridge design example"

EXTREME EVENT II - Load combination relating to ice load, collision by vessels and vehicles, and certain hydraulic events.

"Not applicable for the substructure design in this design example"

SERVICE I - Load combination relating to the normal operational use of the bridge with a 55 MPH wind and all loads taken at their nominal values.

"Not applicable for the substructure design in this design example"

SERVICE II - Load combination intended to control yielding of steel structures and slip of slip-critical connections due to vehicular live load.

"Not applicable for this simple span prestressed beam bridge design example"

SERVICE III - Load combination relating only to tension in prestressed concrete structures with the objective of crack control.

"Not applicable for the substructure design in this design example"

FATIGUE - Fatigue load combination relating to repetitive gravitational vehicular live load under a single design truck.

"Not applicable for the substructure design in this design example"

A. General Criteria

The following is a summary of all the loads previously calculated:

A1. Load Summary

- **Dead Loads -** Unfactored beam reactions at the pier for DC and DW loads

UNFACTORED BEAM REACTIONS AT PIER						
	DC Loads (kip)			DW Loads (kip)		
Beam	x	y	z	x	y	z
1	0.0	-183.6	0.0	0.0	-10.8	0.0
2	0.0	-174.3	0.0	0.0	-9.4	0.0
3	0.0	-174.3	0.0	0.0	-9.4	0.0
4	0.0	-174.3	0.0	0.0	-9.4	0.0
5	0.0	-174.3	0.0	0.0	-9.4	0.0
6	0.0	-174.3	0.0	0.0	-9.4	0.0
7	0.0	-174.3	0.0	0.0	-9.4	0.0
8	0.0	-174.3	0.0	0.0	-9.4	0.0
9	0.0	-174.3	0.0	0.0	-9.4	0.0
10	0.0	-174.3	0.0	0.0	-9.4	0.0
11	0.0	-183.6	0.0	0.0	-10.8	0.0

- **Live load -**

  Unfactored beam reactions at the pier for maximum axial force in the column

UNFACTORED LIVE LOAD (causing axial) AT PIER COLUMN 2			
	LL Loads (kip)		
Beam	x	y	z
1	0.0	0.0	0.0
2	0.0	-15.9	0.0
3	0.0	-89.0	0.0
4	0.0	-115.9	0.0
5	0.0	-85.4	0.0
6	0.0	-87.8	0.0
7	0.0	-15.9	0.0
8	0.0	0.0	0.0
9	0.0	0.0	0.0
10	0.0	0.0	0.0
11	0.0	0.0	0.0

Unfactored beam reactions at the pier for maximum transverse moment in the column

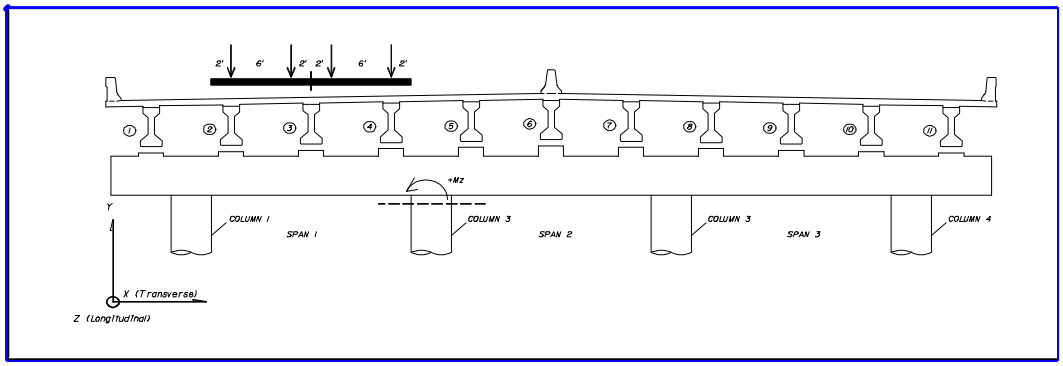

UNFACTORED LIVE LOAD (causing moment) AT PIER COLUMN 2			
	LL Loads (kip)		
Beam	x	y	z
1	0.0	-1.4	0.0
2	0.0	-97.7	0.0
3	0.0	-123.3	0.0
4	0.0	-97.7	0.0
5	0.0	-1.4	0.0
6	0.0	0.0	0.0
7	0.0	0.0	0.0
8	0.0	0.0	0.0
9	0.0	0.0	0.0
10	0.0	0.0	0.0
11	0.0	0.0	0.0

***Note**: This live load placement causes a +Mz moment about pier column 2, while the majority of the loads that are being applied (WS and WL) have loads that cause a -Mz moment about pier column 2.*

We will change the direction of the WS and WL loads in the combinations.

- **Braking Force** - Unfactored beam reactions at the pier for BR loads

BRAKING FORCES AT PIER			
	BR Loads (kip)		
Beam	x	y	z
1	1.9	-0.5	-3.3
2	1.9	-0.5	-3.3
3	1.9	-0.5	-3.3
4	1.9	-0.5	-3.3
5	1.9	-0.5	-3.3
6	1.9	-1.9	0.0
7	0.0	0.0	0.0
8	0.0	0.0	0.0
9	0.0	0.0	0.0
10	0.0	0.0	0.0
11	0.0	0.0	0.0

***Note**: The direction of braking was reversed in order to maximize the longitudinal braking moments, Mx caused by "z" loads, to maximize the effects of WS and WL.*

- **Creep, Shrinkage and Temperature** - Unfactored beam reactions at the pier for CU, SH and TU loads

CREEP, SHRINKAGE, TEMPERATURE FORCES AT PIER			
	CR, SH, TU Loads (kip)		
Beam	x	y	z
1	0.0	0.0	0.0
2	0.0	0.0	0.0
3	0.0	0.0	0.0
4	0.0	0.0	0.0
5	0.0	0.0	0.0
6	0.0	0.0	0.0
7	0.0	0.0	0.0
8	0.0	0.0	0.0
9	0.0	0.0	0.0
10	0.0	0.0	0.0
11	0.0	0.0	0.0

- **Wind on structure** - Unfactored beam reactions for WS loads

WIND ON STRUCTURE FORCES AT PIER			
	WS Loads (kip)		
Beam	x	y	z
1	-2.6	0.0	-3.2
2	-2.6	0.0	-3.2
3	-2.6	0.0	-3.2
4	-2.6	0.0	-3.2
5	-2.6	0.0	-3.2
6	-2.6	0.0	-3.2
7	-2.6	0.0	-3.2
8	-2.6	0.0	-3.2
9	-2.6	0.0	-3.2
10	-2.6	0.0	-3.2
11	-2.6	0.0	-3.2

Wind Loads Applied to Substructure				
	X (trans)		Z (long)	
Pier Cap	10.13	kip	-0.30	klf
Pier Column	-0.07	klf	-0.26	klf

***Note**: The direction of wind was reversed in order to maximize the -Mz moment about pier column 2*

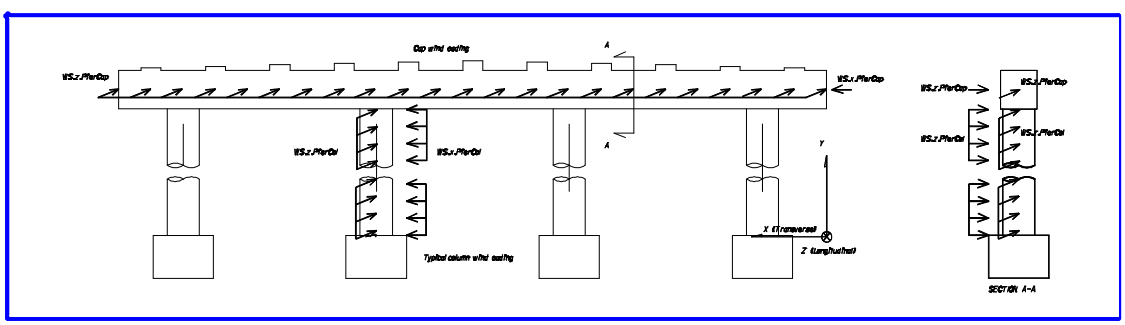

- **Wind on load on vehicles** - Unfactored beam reactions for WL loads

WIND ON LIVE LOAD FORCES AT PIER			
	WL Loads (kip)		
Beam	x	y	z
1	-0.7	0.0	-0.8
2	-0.7	10.3	-0.8
3	-0.7	-10.3	-0.8
4	-0.7	0.0	-0.8
5	-0.7	0.0	-0.8
6	-0.7	0.0	-0.8
7	-0.7	0.0	-0.8
8	-0.7	0.0	-0.8
9	-0.7	0.0	-0.8
10	-0.7	0.0	-0.8
11	-0.7	0.0	-0.8

***Note**: The direction of wind was reversed in order to maximize the -Mz moment about pier column 2*

B. Design Limit States

The design loads for strength I, strength III, and service V limit states are summarized in this section. For each limit state, two loading conditions are presented: maximum axial force and maximum moment.

These reactions are from the superstructure **only**, acting on the substructure. In the analysis model, such as a GTStrudl, Sap2000, Strudl, Larsa 2000, etc, include the following loads:

- DC: self-weight of the substructure, include pier cap and columns
- TU: a temperature increase and fall on the pier substructure utilizing the following parameters:

coefficient of expansion $\alpha_t = 6 \times 10^{-6} \frac{1}{°F}$

temperature change $\text{temperature}_{increase} = \text{temperature}_{fall} = 25 \cdot °F$

For instance, in LEAP's RCPier, two load cases would be required for temperature with a positive and negative strain being inputed, equal to: $\alpha_t \cdot (25 \cdot °F) = 0.00015$

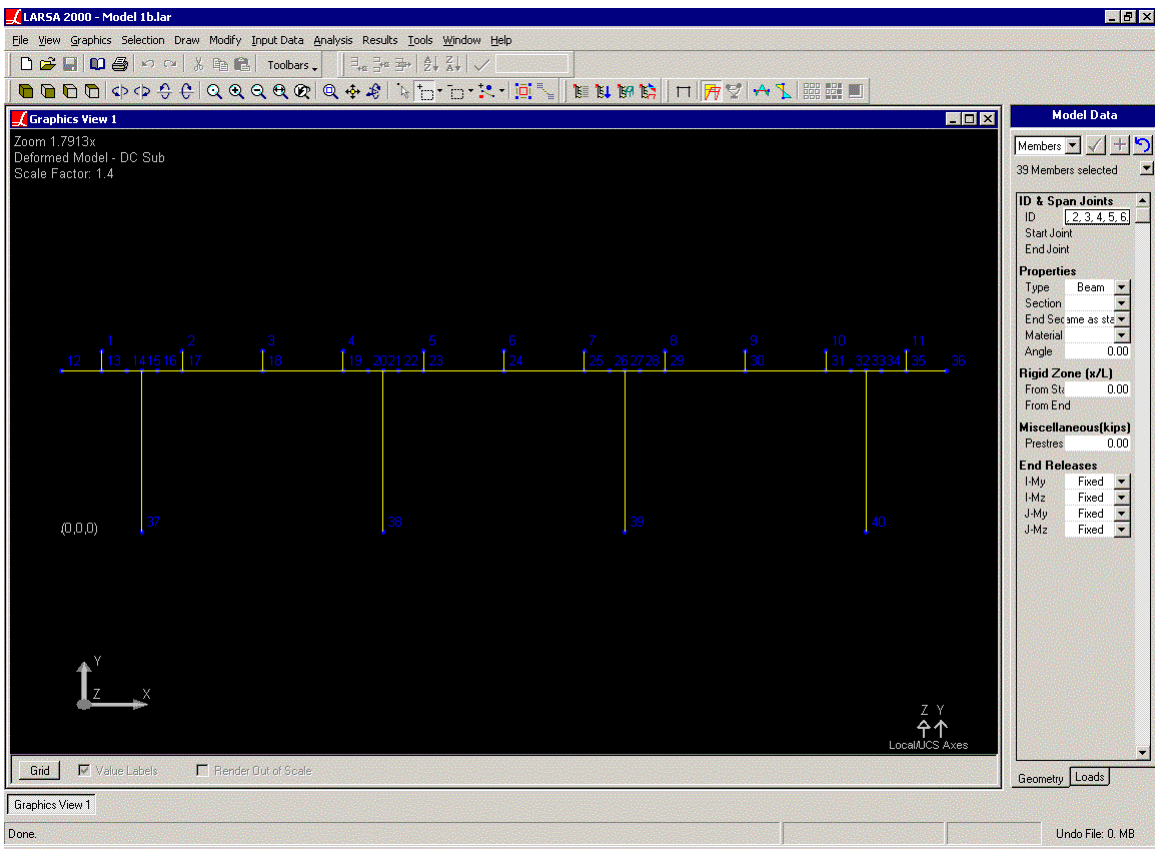

Note that in our model, the loads applied at the top of the cap from the beams are applied to rigid links that transfer the lateral loads as a lateral load and moment at the centroid of the pier cap. This is consistent with substructure design programs like LEAP's RCPier. Fixity of the pier was provided at the bottom of the columns.

- WS: Wind on the substructure should be applied directly to the analysis model. The following is an example

of the wind locations and terminology used in our analysis:

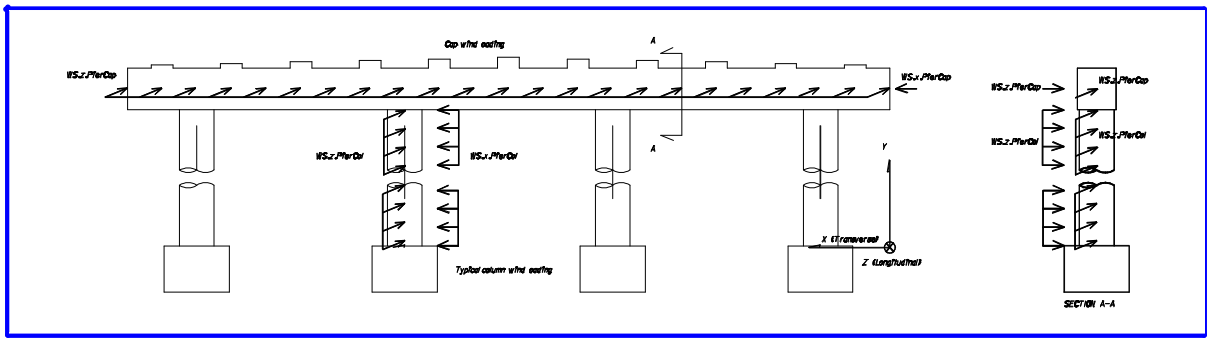

Forces applied directly to the analysis model

- All applied loads in the substructure analysis model should be multiplied by the appropriate load factor values and combined with the limit state loads calculated in this file for the final results.

B1. Strength I Limit State

Strength1 = 1.25·DC + 1.5·DW + 1.75·LL + 1.75BR + 0.50·(TU + CR + SH)

Strength I Limit State

	Max. Axial Loads (kip)			Max. Moment Loads (kip)		
Beam #	**X**	**Y**	**Z**	**X**	**Y**	**Z**
1	3.3	-246.5	-5.8	3.3	-248.9	-5.8
2	3.3	-260.7	-5.8	3.3	-403.8	-5.8
3	3.3	-388.6	-5.8	3.3	-448.6	-5.8
4	3.3	-435.7	-5.8	3.3	-403.8	-5.8
5	3.3	-382.3	-5.8	3.3	-235.3	-5.8
6	3.3	-389.0	0.0	3.3	-235.4	0.0
7	0.0	-259.9	0.0	0.0	-232.0	0.0
8	0.0	-232.0	0.0	0.0	-232.0	0.0
9	0.0	-232.0	0.0	0.0	-232.0	0.0
10	0.0	-232.0	0.0	0.0	-232.0	0.0
11	0.0	-245.7	0.0	0.0	-245.7	0.0

B2. Strength III Limit State

Strength3 = 1.25·DC + 1.5·DW + 1.4WS + 0.50·(TU + CR + SH)

Strength III Limit State

Beam #	Loads (kip) X	Y	Z
1	-3.7	-245.7	-4.5
2	-3.7	-232.0	-4.5
3	-3.7	-232.0	-4.5
4	-3.7	-232.0	-4.5
5	-3.7	-232.0	-4.5
6	-3.7	-232.0	-4.5
7	-3.7	-232.0	-4.5
8	-3.7	-232.0	-4.5
9	-3.7	-232.0	-4.5
10	-3.7	-232.0	-4.5
11	-3.7	-245.7	-4.5

Wind Loads Applied to Substructure

	X (trans)	Z (long)
Pier Cap	14.19 klf	-0.41 kip
Pier Column	-0.10 klf	-0.37 klf

B3. Strength V Limit State

Strength5 = 1.25·DC + 1.50·DW + 1.35·LL + 1.35·BR + 0.40·WS + 1.0·WL + 0.50·(TU + CR + SH)

Beam #	'Max. Axial Loads (kip) X	Y	Z	Max. Moment Loads (kip) X	Y	Z
1	0.9	-246.3	-6.6	0.9	-248.2	-6.6
2	0.9	-243.9	-6.6	0.9	-354.3	-6.6
3	0.9	-363.1	-6.6	0.9	-409.4	-6.6
4	0.9	-389.1	-6.6	0.9	-364.6	-6.6
5	0.9	-348.0	-6.6	0.9	-234.6	-6.6
6	0.9	-353.1	-2.1	0.9	-234.6	-2.1
7	-1.7	-253.5	-2.1	-1.7	-232.0	-2.1
8	-1.7	-232.0	-2.1	-1.7	-232.0	-2.1
9	-1.7	-232.0	-2.1	-1.7	-232.0	-2.1
10	-1.7	-232.0	-2.1	-1.7	-232.0	-2.1
11	-1.7	-245.7	-2.1	-1.7	-245.7	-2.1

Wind Loads Applied to Substructure

	X (transv)	Z (long)
Pier Cap	4.05 kip	-0.12 klf
Pier Column	-0.03 klf	-0.10 klf

C4. Summary of Results

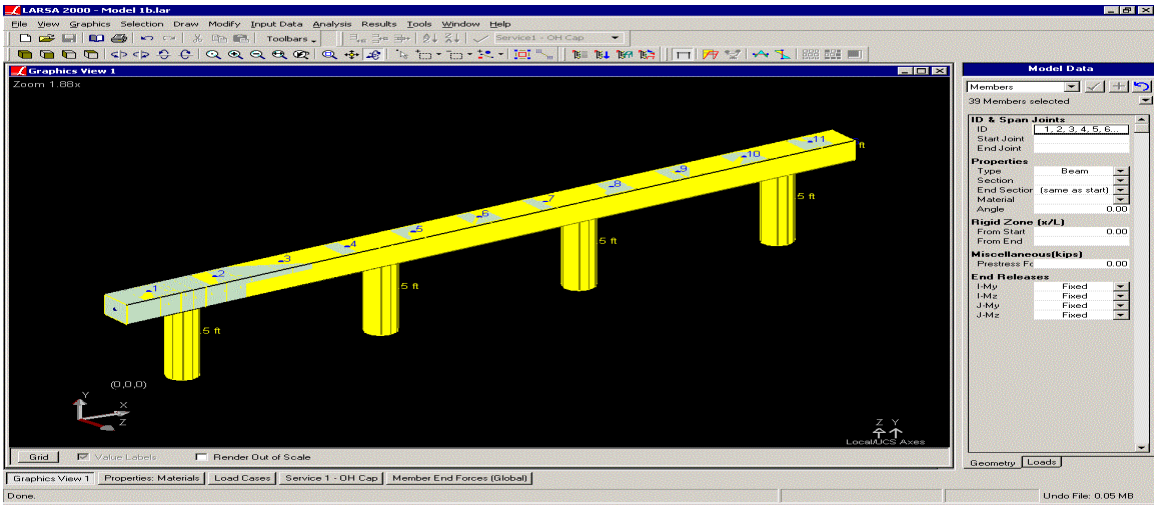

LARSA 2000 COLUMN 2 RESULTS

Member	Joint	Result Case	Fx	Fy	Fz	Mx	My	Mz	
37	21	Strength 1 - P Col -TU	30.86	-1352.58	-11.21	-6.11	-17.32	310.71	
37	38	Strength 1 - P Col -TU	-30.86	1396.17	11.21	213.40	17.32	260.21	*
37	21	Strength 1 - M Col -TU	65.42	-1164.71	-11.21	-6.11	-17.32	730.02	*
37	38	Strength 1 - M Col -TU	-65.42	1208.30	11.21	213.40	17.32	480.23	*
37	21	Strength 3 - Col -TU	9.62	-829.40	-25.37	-16.23	3.03	97.43	
37	38	Strength 3 - Col -TU	-7.81	872.99	32.11	547.92	-3.03	63.79	*
37	21	Strength 5 - P Col -TU	24.25	-1236.90	-18.41	-13.35	-12.26	247.92	
37	38	Strength 5 - P Col -TU	-23.73	1280.50	20.33	371.70	12.26	195.95	
37	21	Strength 5 - M Col -TU	50.92	-1092.08	-18.41	-13.35	-12.26	571.46	
37	38	Strength 5 - M Col -TU	-50.40	1135.67	20.33	371.70	12.26	365.70	*

NOTES:

(1) Values (*) used for column design check. Node 21 results given represents value at top of column, node 38 is bottom of column.

(2) Values highlighted are governing design loads.

(3) (-TU) means load case with a temperature fall in the substructure governed.

From the load cases that were run, we can also ask for the values at Column 1. Based on the loads that were applied for the cap design and column 2 design, these load combinations should give a fairly accurate value of

the loads experienced by this column. In fact, based on the evaluation of these loads in the next section, the loads in column 1 govern the reinforcing requirements.

This approach was somewhat on purpose. It was meant to show that the column that may experience the greater loads may not necessarily be the most critical. Therefore, exterior columns should also be checked since their design may be governed by bending moments rather than axial loads.

LARSA 2000 COLUMN 1 RESULTS

Member	Joint	Result Case	Fx	Fy	Fz	Mx	My	Mz	
36	15	Strength 1 - +M Cap +TU	-99.94	-899.84	15.24	-1.91	5.23	-1114.70	*
36	37	Strength 1 - +M Cap +TU	99.94	943.43	-15.24	-279.99	-5.23	-734.16	
36	15	Strength 1 - P Col +TU	-70.28	-776.23	-15.24	1.91	-5.23	-780.03	
36	37	Strength 1 - P Col +TU	70.28	819.82	15.24	279.99	5.23	-520.06	*
36	15	Strength 1 - M Col +TU	-92.83	-937.03	-15.24	1.91	-5.23	-1067.45	
36	37	Strength 1 - M Col +TU	92.83	980.62	15.24	279.99	5.23	-649.82	
36	15	Strength 3 - Col +TU	-55.11	-681.18	-21.46	-40.07	9.14	-542.45	
36	37	Strength 3 - Col +TU	56.93	724.77	28.19	499.31	-9.14	-493.95	*
36	15	Strength 5 - P Col +TU	-69.03	-751.90	-20.04	-16.13	-0.51	-745.60	
36	37	Strength 5 - P Col +TU	69.55	795.49	21.96	404.61	0.51	-536.21	
36	15	Strength 5 - M Col +TU	-86.43	-876.03	-20.04	-16.13	-0.51	-967.34	*
36	37	Strength 5 - M Col +TU	86.94	919.62	21.96	404.61	0.51	-636.34	

NOTES:
(1) Values (*) used for column design check. Node 15 results given represents value at top of column, node 37 is bottom of column.
(2) Values highlighted are governing design loads.
(3) (+TU) means load case with a temperature rise in the substructure governed.

Defined Units

Pier Column Design

Reference

Reference:F:\HDRDesignExamples\Ex1_PCBeam\306PierColLds.mcd(R)

Description

This document provides the design check summary for columns 1 and 2. P−Δ or any secondary effects were not evaluated. (**Note**: Most higher-end analysis programs, such as Larsa 2000 have the capability to analyze for secondary effects on columns such that the resulting moments are already magnified by P−Δ. If not, programs like PCA Column have a "Slender" column option whereas some parameters for slenderness can be entered to include secondary effects.)

Page Contents

261 **A. General Criteria**

A1. Pier Column Design Loads

262 **B. PCA Column Analysis**

B1. Input Variables

B2. Output

A. General Criteria

A1. Pier Column Design Loads

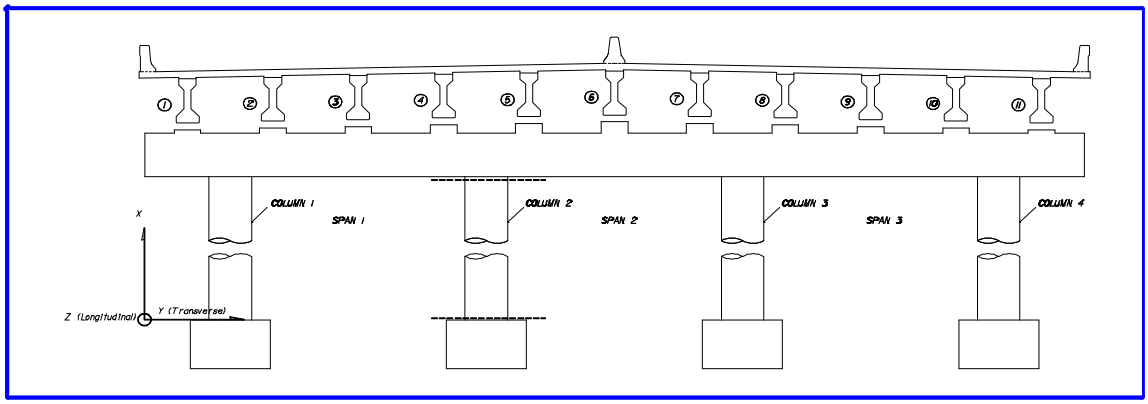

Strength I, strength III, and strength V loads for columns 1 and 2 were evaluated. The following table summarizes the results from LARSA 2000 output for pier columns 1 and 2..

LARSA 2000 COLUMN RESULTS

Member	Joint	Result Case	Fx	Fy	Fz	Mx	My	Mz	
		Column 1							
36	15	Strength 1 - +M Cap +TU	-99.94	-899.84	15.24	-1.91	5.23	-1114.70	*
36	37	Strength 1 - +M Cap +TU	99.94	943.43	-15.24	-279.99	-5.23	-734.16	
36	15	Strength 1 - P Col +TU	-70.28	-776.23	-15.24	1.91	-5.23	-780.03	*
36	37	Strength 1 - P Col +TU	70.28	819.82	15.24	279.99	5.23	-520.06	
36	15	Strength 3 - Col +TU	-55.11	-681.18	-21.46	-40.07	9.14	-542.45	
36	37	Strength 3 - Col +TU	56.93	724.77	28.19	499.31	-9.14	-493.95	*
36	15	Strength 5 - M Col +TU	-86.43	-876.03	-20.04	-16.13	-0.51	-967.34	*
36	37	Strength 5 - M Col +TU	86.94	919.62	21.96	404.61	0.51	-636.34	
		Column 2							
37	21	Strength 1 - P Col -TU	30.86	-1352.58	-11.21	-6.11	-17.32	310.71	
37	38	Strength 1 - P Col -TU	-30.86	1396.17	11.21	213.40	17.32	260.21	*
37	21	Strength 1 - M Col -TU	65.42	-1164.71	-11.21	-6.11	-17.32	730.02	*
37	38	Strength 1 - M Col -TU	-65.42	1208.30	11.21	213.40	17.32	480.23	
37	21	Strength 3 - Col -TU	9.62	-829.40	-25.37	-16.23	3.03	97.43	
37	38	Strength 3 - Col -TU	-7.81	872.99	32.11	547.92	-3.03	63.79	*
37	21	Strength 5 - M Col -TU	50.92	-1092.08	-18.41	-13.35	-12.26	571.46	*
37	38	Strength 5 - M Col -TU	-50.40	1135.67	20.33	371.70	12.26	365.70	

NOTES:

(1) Values (*) used for column design. Node 15 and 37 represents value at top and bottom of column 1, nodes 21 and 38 are top and bottom of column 2.

(2) Values highlighted are governing design loads.

(3) (-TU) means load case with a temperature fall in the substructure governed.

B. PCA Column Analysis

B1. Input Variables

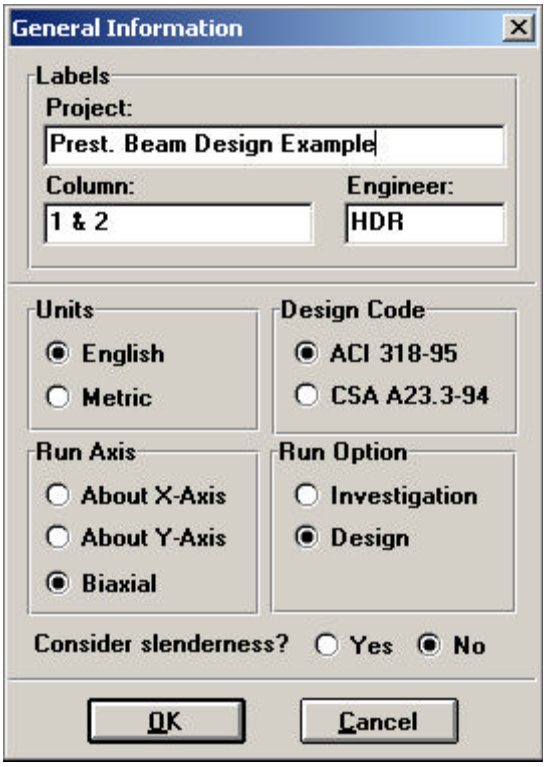

...Enter general information...

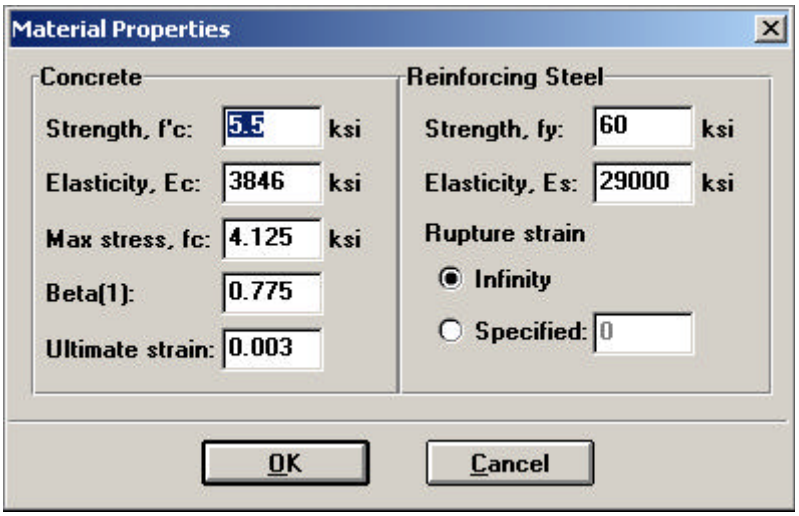

...Enter material properties...

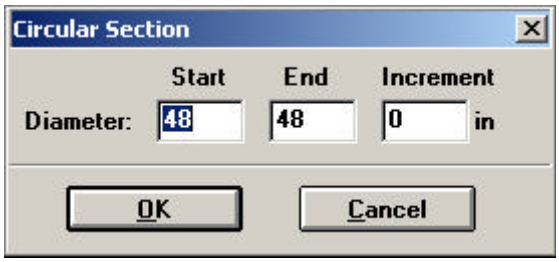

...Enter column geometry...

Limits of Reinforcement [LRFD 5.7.4.2]

To account for the compressive strength of concrete, minimum reinforcement in flexural members is found to be proportional to $\left(\frac{f_c}{f_y}\right)$. Therefore, the longitudinal reinforcement in columns can be less than $0.01 \cdot A_g$ if allowed by the following equation:

Maximum area of reinforcement..... $\frac{A_s}{A_g} + \frac{A_{ps} \cdot f_{pu}}{A_g \cdot f_y} \le 0.08$

*(**Note**: 8% maximum is still applicable as per the LRFD).*

Minimum area of reinforcement..... $\frac{A_s \cdot f_y}{A_g \cdot f_c} + \frac{A_{ps} \cdot f_{pu}}{A_g \cdot f_c} \ge 0.135$

For non-prestressed columns, the minimum percentage of reinforcement allowed is.....

$$A_{s\%} := 0.135 \cdot \frac{f_{c.sub}}{f_y}$$

$$A_{s\%} = 1.24\,\%$$

*(**Note**: This equation was written in the form of* $A_{s\%} = \frac{A_s}{A_g} \ge 0.135 \cdot \frac{f_{c.sub}}{f_y}$ *where* $A_{s\%}$ *is the percentage of reinforcement.*

In this situation, the minimum steel requirement was greater than 1% of the gross column area. For PCA Column, enter $A_{s\%} = 1.24\,\%$ for minimum reinforcement.

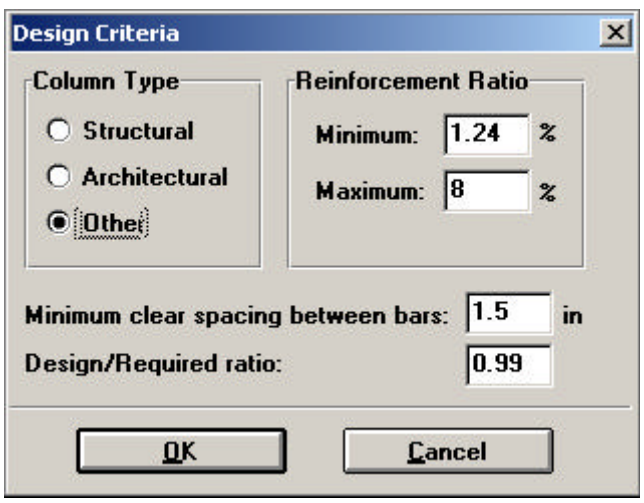

...Enter column design criteria...

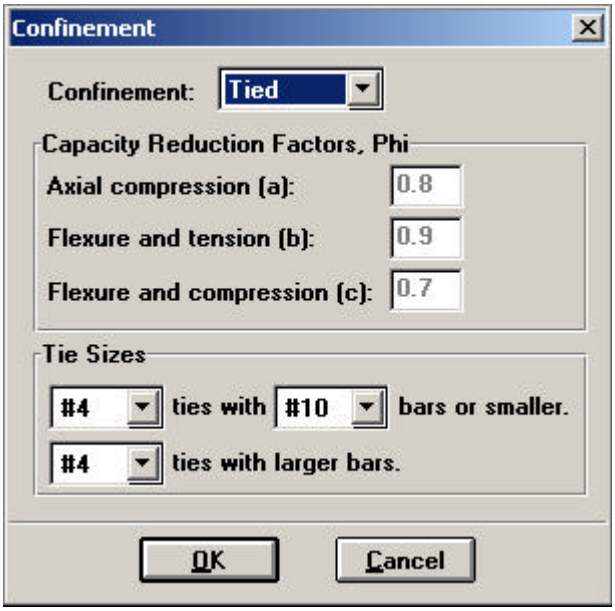

...Enter column tie reinforcing information...

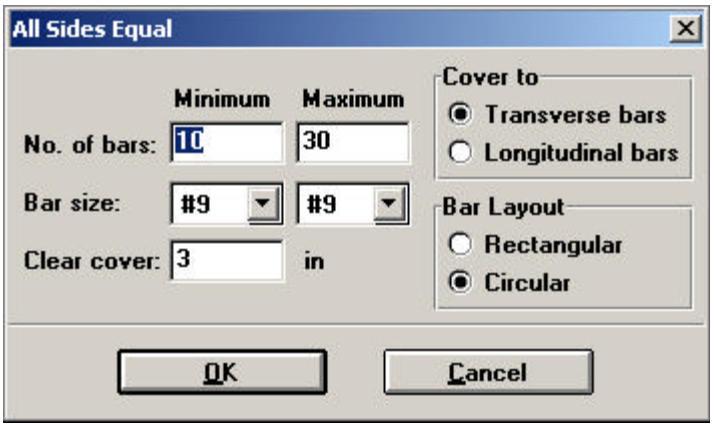

...Enter column reinforcing information...

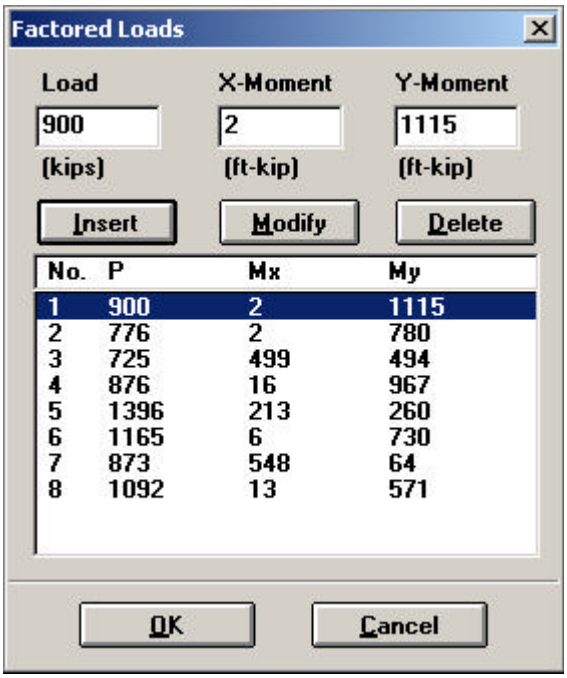

...Enter factored loads acting on column...

B2. Output

Based on the results, the columns have adequate capacity for the applied loads. The columns can be reduced in diameter, however, 4 foot diameter columns are typically found on intermediate piers over cross-streets. Another alternative to maximize the columns is to increase the column spacing, however, this will require greater reinforcing in the pier cap.

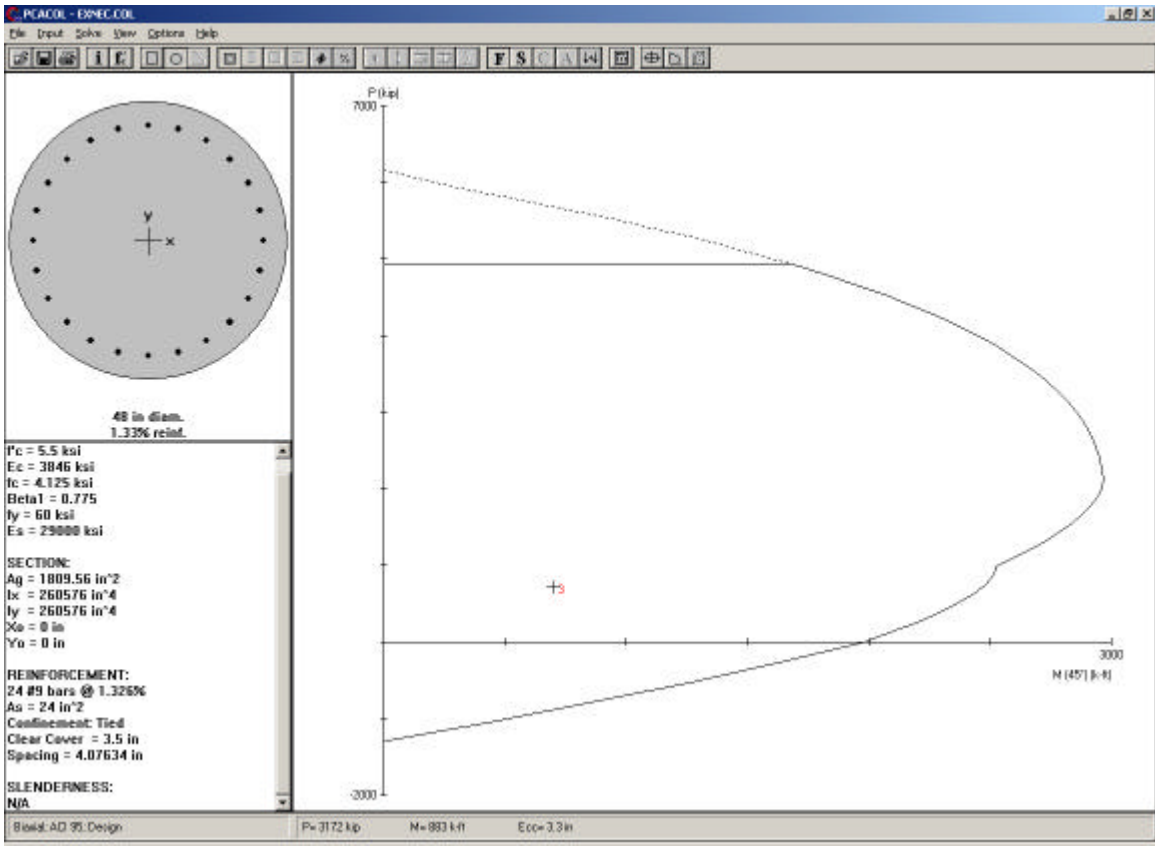


```
Total steel area, As = 24.00 in^2 at 1.33%


24-#9   Cover = 3 in


      Pu       Mux       Muy      fMnx      fMny
No.  kip      k-ft      k-ft      k-ft      k-ft    fMn/Mu

-----------------------------------------------------------------
1    900.0     2.0      1115.0      4.4      2529.9    2.269
2    776.0     2.0       780.0      6.5      2498.3    3.203
3    725.0   499.0       494.0   1763.7      1745.5    3.534
4    876.0    16.0       967.0     41.1      2524.7    2.611
5   1396.0   213.0       260.0   1761.2      2149.8    8.268
6   1165.0     6.0       730.0     21.9      2648.8    3.629
7    873.0   548.0        64.0   2506.2       295.9    4.574
8   1092.0    13.0       571.0     55.8      2600.3    4.554
```

*(**Note**: For constructability, our experience has shown that if the bars are kept to a multiple of 4 then it improves placing the longitudinal steel around the column steel. In the plans, 24-#9 will be detailed.)*

<- governs

Since point 1 governs for moment [column 1], the foundation for this column is subsequently designed.

Pier Foundation Design Loads

Reference

Reference:F:\HDRDesignExamples\Ex1_PCBeam\307PierCol.mcd(R)

Description

This document provides the design parameters necessary for the substructure pile vertical load and footing design.

Page Contents

267 **A. General Criteria**

A1. Pier Column Live Load (LL) Summary

A2. Foundation Design Load Summary

A. General Criteria

A1. Modification to Pier Column Live Loads for Foundation Design

The Dynamic Load Amplification (DLA) is not required since the foundation components are entirely below ground level **[LRFD 3.6.2.1]**.

A2. Foundation Design Load Summary

For the foundation design, the impact on the truck will need to be removed from the load combinations since the footing is embedded in the ground. If the footing were a waterline footing, then impact should be included.

For this design example, we will use the load combination that governed for the column design. In addition, the corresponding service limit state moments have been included and shown in the table below.

LARSA 2000 COLUMN RESULTS

Member	Joint	Result Case	Fx	Fy	Fz	Mx	My	Mz	
		Column 1							
36	15	Strength 1 - +M Cap +TU	-99.94	-899.84	15.24	-1.91	5.23	-1114.70	
36	37	Strength 1 - +M Cap +TU	99.94	943.43	-15.24	-279.99	-5.23	-734.16	
				943.43		**-325.70**		**-1033.98**	*
36	15	Service 1 - +M Cap +TU	-100.40	-673.09	15.41	13.83	0.05	-1008.23	
36	37	Service 1 - +M Cap +TU	100.01	707.96	-16.85	-312.19	-0.05	-845.54	
				707.96		**-362.74**		**-1145.56**	*

Note:
The values in **bold** have been translated from the bottom of the column to the top of the piles (= 3 ft).

Defined Units

Pier Piles Vertical Load Design

References

Reference:F:\HDRDesignExamples\Ex1_PCBeam\308PierFoundLds.mcd(R)

Description

This section provides the design of the piles for vertical loads (exclude lateral load design). For this design example, only the piles for column 1 footing will be evaluated.

Page Contents

Page	Contents
269	**FDOT Criteria**
270	**A. Input Variables**
	A1. Geometry
	A2. Forces on Top of Footing
271	**B. Pile Loads**
	B1. 4- Pile Footing Investigation
	B2. 6- Pile Footing Investigation
276	**C. Pile Tip Elevations for Vertical Load**
	C1. Pile Capacities as per SPT97

LRFD Criteria

FDOT Criteria

Minimum Sizes [SDG 3.5.2]

Use 18" square piling, except for extremely aggressive salt water environments.

Spacing, Clearances and Embedment and Size [SDG 3.5.3]

Minimum pile spacing center-to-center must be at least three times the least width of the deep foundation element measured at the ground line.

Resistance Factors [SDG 3.5.5]

The resistance factor utilizing SPT97 for piles under compression shall be... $\phi_{SPT97} := 0.65$

Minimum Pile Tip [SDG 3.5.7]

The minimum pile tip elevation must be the deepest of the minimum elevations that satisfy lateral stability requirements for the three limit states. Since this bridge is not over water, scour and ship impact are not design issues. The design criteria for minimum tip elevation are based on vertical load requirements and lateral load analysis.

Pile Driving Resistance [SDG 3.5.11]

The Required Driving Resistance for an 18" square concrete pile must not exceed..... $UBC_{FDOT} := 300 \cdot Ton$

A. Input Variables

A1. Geometry

Depth of footing..... $h_{Ftg} = 4\ ft$

Width of footing..... $b_{Ftg} = 7.5\ ft$

Length of footing..... $L_{Ftg} = 7.5\ ft$

Pile Embedment Depth..... $Pile_{embed} = 1\ ft$

A2. Forces on Top of Footing

Area of Footing..... $A_{ftg} := b_{Ftg} \cdot L_{Ftg}$

$A_{ftg} = 56.3\ ft^2$

Footing weight not included in LARSA..... $wt_{Ftg} := \gamma_{conc} \cdot (A_{ftg} \cdot h_{Ftg})$

$wt_{Ftg} = 33.8\ kip$

Maximum service load..... $P_y = 708.0\ kip$

and corresponding moments..... $M_x = -362.7\ ft \cdot kip$

$M_z = -1145.6\ ft \cdot kip$

Maximum factored load..... $Pu_y = 943.4\ kip$

and corresponding moments..... $Mu_x = -325.7\ ft \cdot kip$

$Mu_z = -1034.0\ ft \cdot kip$

B. Pile Loads

B1. 4- Pile Footing Investigation

So far, the design example has assumed that a 4-pile footing will be adequate.

Foundation Layout

Size of the square concrete piles..... $Pile_{size} = 18\,in$

Number of Piles..... $n_{pile} := 4$

Pile Coordinates.....

$$Pile_{index} := \begin{pmatrix} 0 \\ 1 \\ 2 \\ 3 \end{pmatrix} \qquad X_{pile} := \begin{pmatrix} -2.25 \\ 2.25 \\ 2.25 \\ -2.25 \end{pmatrix} \cdot ft \qquad Z_{pile} := \begin{pmatrix} 2.25 \\ 2.25 \\ -2.25 \\ -2.25 \end{pmatrix} \cdot ft$$

$k := 0 .. n_{pile} - 1$

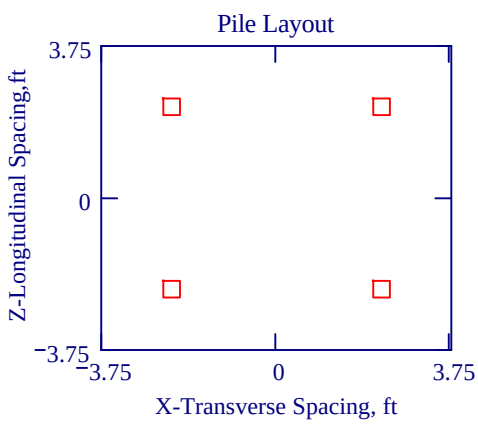

Overturning Forces due to Moments

General equation for axial load on any pile..

$$Q_m = \frac{P_y}{n} + \frac{M_x \cdot z}{\sum_{z=0}^{n} \left(z^2\right)} + \frac{M_z \cdot x}{\sum_{x=0}^{n} \left(x^2\right)}$$

Factored Axial Load on Pile

$$Q_{u_k} := \frac{\left|Pu_y + 1.25 \cdot wt_{Ftg}\right|}{n_{pile}} + \frac{\left|Mu_x\right| \cdot Z_{pile_k}}{\sum_{z=0}^{n_{pile}-1} \left[\left(Z_{pile_z}\right)^2\right]} + \frac{\left|Mu_z\right| \cdot X_{pile_k}}{\sum_{x=0}^{n_{pile}-1} \left[\left(X_{pile_x}\right)^2\right]}$$

$$Pile_{index} := \begin{pmatrix} 0 \\ 1 \\ 2 \\ 3 \end{pmatrix} \qquad Q_u = \begin{pmatrix} 167.7 \\ 397.5 \\ 325.1 \\ 95.3 \end{pmatrix} kip$$

Maximum axial load on pile..... $Q_{max} := \max(Q_u)$

$Q_{max} = 198.7\,Ton$

Required driving resistance (RDR)..... $RDR = UBC = \dfrac{\text{Factored Design Load} + \text{Net Scour} + \text{Downdrag}}{\phi}$

Using variables defined in this example..... $UBC := \dfrac{Q_{max}}{\phi_{SPT97}}$

$UBC = 305.8\,Ton$

This value should not exceed the limit specified by FDOT..... $UBC_{FDOT} = 300\,Ton$

A 4-pile footing is not acceptable. It is recommended not to design to the UBC limit since difficulties in pile driving can be encountered causing construction delays. Suggest consulting with the District geotechnical and structural engineers if within 5%-10%. We will investigate a 6-pile footing.

B2. 6- Pile Footing Investigation

The 4-pile footing design involves a limited amount of shear design, since the piles are outside the critical section for shear. To illustrate the shear design process, a 6-pile footing will be evaluated and designed.

New depth of footing..... $h_{Ftg.new} := 4 \cdot ft$

New width of footing..... $b_{Ftg.new} := 12 \cdot ft$

New length of footing..... $L_{Ftg.new} := 7.5 \cdot ft$

New area of Footing..... $A_{ftg.new} := b_{Ftg.new} \cdot L_{Ftg.new}$

$A_{ftg.new} = 90.0\,ft^2$

Footing weight not included in LARSA..... $wt_{Ftg} := \gamma_{conc} \cdot (A_{ftg.new} \cdot h_{Ftg.new})$

$wt_{Ftg} = 54.0\,kip$

Foundation Layout

Size of the square concrete piles..... $Pile_{size} = 18\,in$

Number of Piles..... $n_{pile} := 6$

Pile Coordinates.....

$$Pile_{index} := \begin{pmatrix} 0 \\ 1 \\ 2 \\ 3 \\ 4 \\ 5 \end{pmatrix} \qquad X_{pile} := \begin{pmatrix} -4.5 \\ 0 \\ 4.5 \\ 4.5 \\ 0 \\ -4.5 \end{pmatrix} \cdot ft \qquad Z_{pile} := \begin{pmatrix} 2.25 \\ 2.25 \\ 2.25 \\ -2.25 \\ -2.25 \\ -2.25 \end{pmatrix} \cdot ft$$

$k := 0 .. n_{pile} - 1$

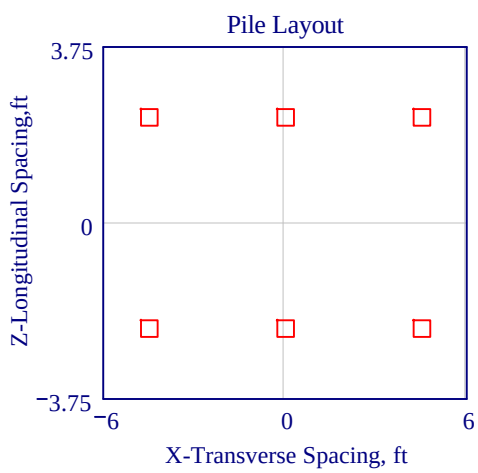

Note:
Pile numbering is from "0" to "5" and are numbered CLOCKWISE beginning with the upper top left side pile.

Service Axial Load on Pile

$$Q_k := \frac{\left|P_y + 1.0 \cdot wt_{Ftg}\right|}{n_{pile}} + \frac{\left|M_x\right| \cdot Z_{pile_k}}{\sum_{z=0}^{n_{pile}-1} \left[\left(Z_{pile_z}\right)^2\right]} + \frac{\left|M_z\right| \cdot X_{pile_k}}{\sum_{x=0}^{n_{pile}-1} \left[\left(X_{pile_x}\right)^2\right]}$$

$$Pile_{index} = \begin{pmatrix} 0 \\ 1 \\ 2 \\ 3 \\ 4 \\ 5 \end{pmatrix} \qquad Q = \begin{pmatrix} 90.2 \\ 153.9 \\ 217.5 \\ 163.8 \\ 100.1 \\ 36.5 \end{pmatrix} kip$$

Factored Axial Load on Pile

$$Q_{u_k} := \frac{\left|Pu_y + 1.25 \cdot wt_{Ftg}\right|}{n_{pile}} + \frac{\left|Mu_x\right| \cdot Z_{pile_k}}{\sum_{z=0}^{n_{pile}-1} \left[\left(Z_{pile_z}\right)^2\right]} + \frac{\left|Mu_z\right| \cdot X_{pile_k}}{\sum_{x=0}^{n_{pile}-1} \left[\left(X_{pile_x}\right)^2\right]}$$

$$Pile_{index} = \begin{pmatrix} 0 \\ 1 \\ 2 \\ 3 \\ 4 \\ 5 \end{pmatrix} \qquad Q_u = \begin{pmatrix} 135.2 \\ 192.6 \\ 250.1 \\ 201.8 \\ 144.4 \\ 86.9 \end{pmatrix} kip$$

Maximum axial load on pile..... $Q_{max} := \max(Q_u)$

$Q_{max} = 125\,Ton$

Minimum axial load on pile (verify no uplift occurs)..... $Q_{min} := \min(Q_u)$

$Q_{min} = 43.5\,Ton$

Required driving resistance (RDR)..... $RDR = UBC = \frac{\text{Factored Design Load} + \text{Net Scour} + \text{Downdrag}}{\phi}$

Using variables defined in this example.....

$$UBC := \frac{Q_{max}}{\phi_{SPT97}}$$

$$UBC = 192.4\,Ton$$

This value should not exceed the limit specified by FDOT.....

$$UBC_{FDOT} = 300\,Ton$$

A 6-pile footing is acceptable.

C. Pile Tip Elevations for Vertical Load

C1. Pile Capacities as per SPT97

The Static Pile Capacity Analysis Program, SPT97 NT v1.5 dated 6/2/00, was utilized to determine the pile capacity. Using boring data, the program can analyze concrete piles, H-piles, pipe piles, and cylinder piles. It is available at the following FDOT website:

http://www11.myflorida.com/structures/programs/spt97setup.exe

For this design example, the boring data is based on Example2 in the program, which is part of the install package.

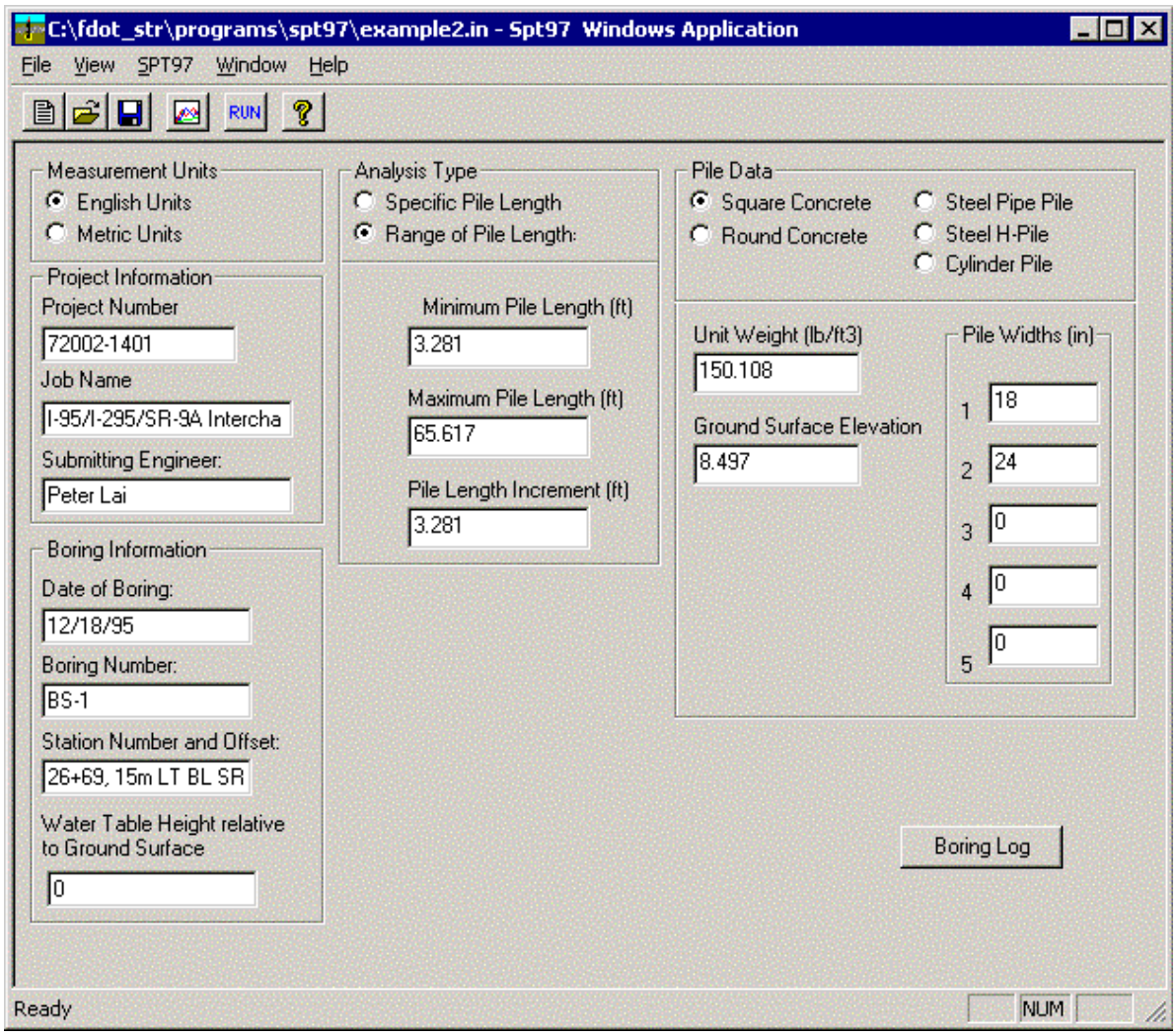

The following picture shows the boring log entries in Example2.in.

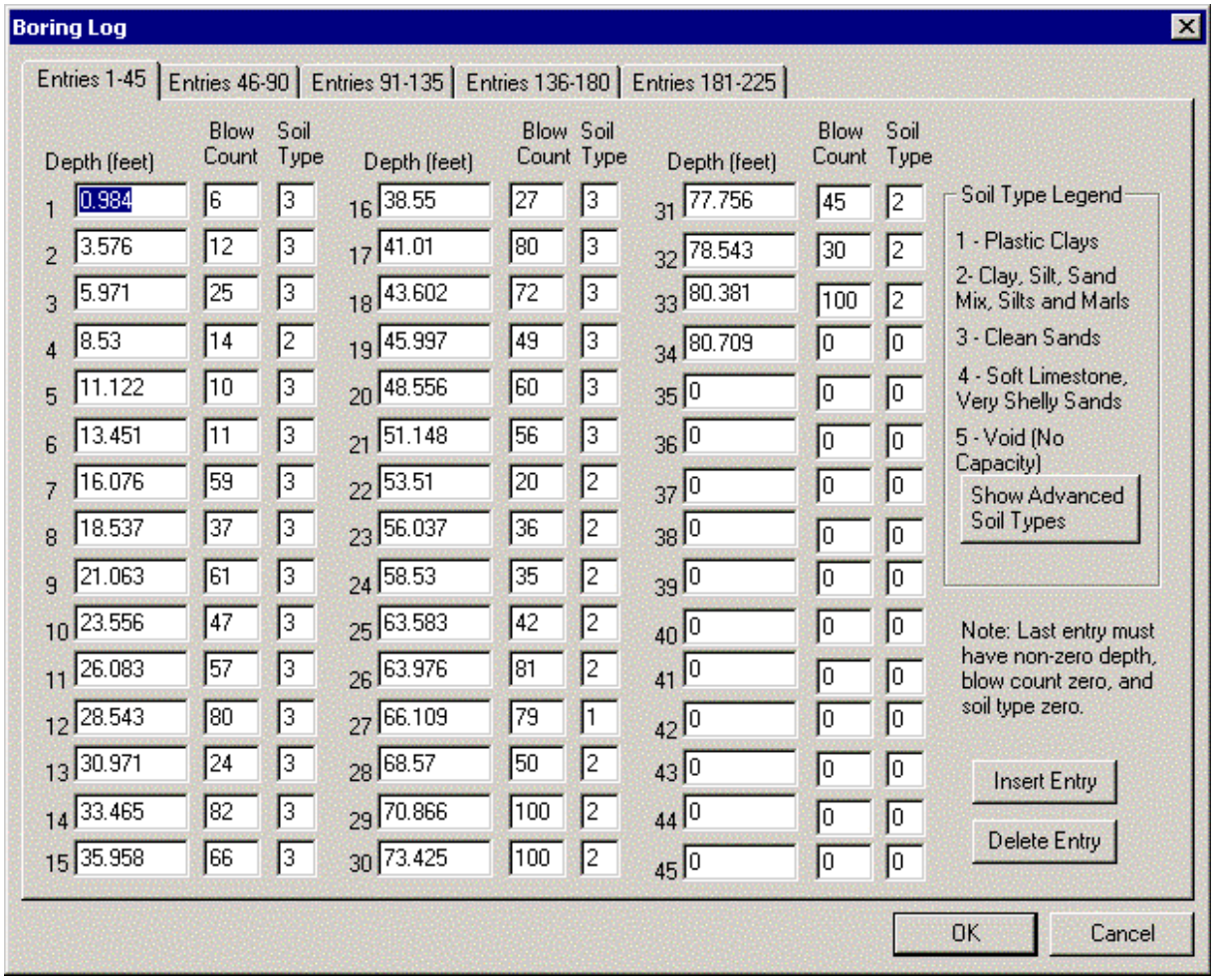

Boring Log

Entries 1-45 | Entries 46-90 | Entries 91-135 | Entries 136-180 | Entries 181-225

	Depth (feet)	Blow Count	Soil Type		Depth (feet)	Blow Count	Soil Type		Depth (feet)	Blow Count	Soil Type
1	0.984	6	3	16	38.55	27	3	31	77.756	45	2
2	3.576	12	3	17	41.01	80	3	32	78.543	30	2
3	5.971	25	3	18	43.602	72	3	33	80.381	100	2
4	8.53	14	2	19	45.997	49	3	34	80.709	0	0
5	11.122	10	3	20	48.556	60	3	35	0	0	0
6	13.451	11	3	21	51.148	56	3	36	0	0	0
7	16.076	59	3	22	53.51	20	2	37	0	0	0
8	18.537	37	3	23	56.037	36	2	38	0	0	0
9	21.063	61	3	24	58.53	35	2	39	0	0	0
10	23.556	47	3	25	63.583	42	2	40	0	0	0
11	26.083	57	3	26	63.976	81	2	41	0	0	0
12	28.543	80	3	27	66.109	79	1	42	0	0	0
13	30.971	24	3	28	68.57	50	2	43	0	0	0
14	33.465	82	3	29	70.866	100	2	44	0	0	0
15	35.958	66	3	30	73.425	100	2	45	0	0	0

Soil Type Legend

1 - Plastic Clays

2- Clay, Silt, Sand Mix, Silts and Marls

3 - Clean Sands

4 - Soft Limestone, Very Shelly Sands

5 - Void (No Capacity)

Show Advanced Soil Types

Note: Last entry must have non-zero depth, blow count zero, and soil type zero.

Insert Entry

Delete Entry

OK | Cancel

Recall that the ultimate bearing capacity, UBC, is given by.....

$$UBC = \frac{\text{Factored Design Load} + \text{Net Scour} + \text{Downdrag}}{\phi}$$

In this design example, net scour and downdrag are zero, so the UBC is.....

$$UBC = 192.4\ \text{Ton}$$

The program was executed, and the output can be summarized as follows:

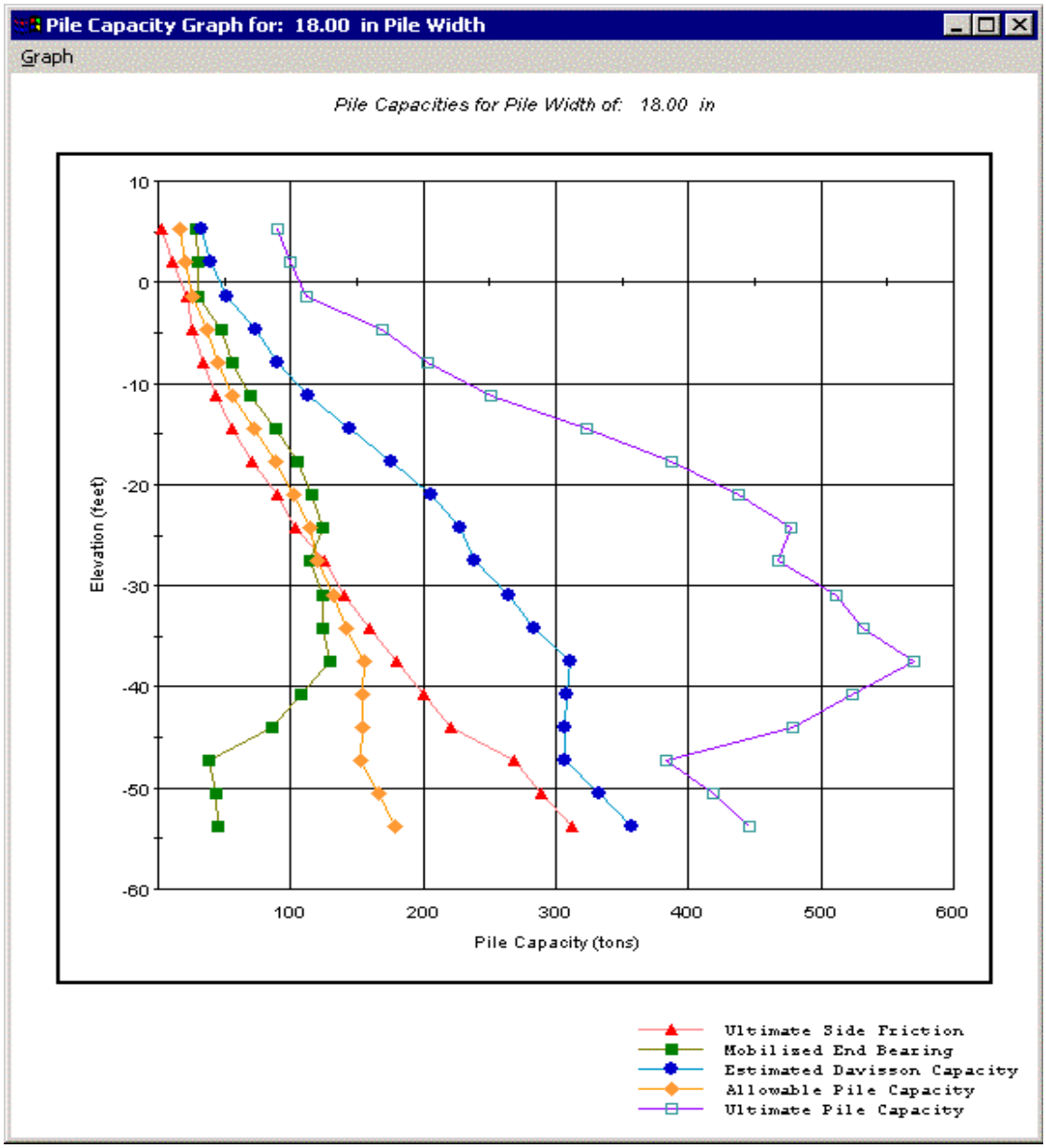

D. PILE CAPACITY VS. PENETRATION
==========

TEST PILE LENGTH (FT)	PILE TIP ELEV (FT)	ULTIMATE SIDE FRICTION (TONS)	MOBILIZED END BEARING (TONS)	ESTIMATED DAVISSON CAPACITY (TONS)	ALLOWABLE PILE CAPACITY (TONS)	ULTIMATE PILE CAPACITY (TONS)
26.2	-17.8	70.64	105.33	175.97	87.98	386.63
29.5	-21.0	89.84	115.90	205.74	102.87	437.53

A lateral load analysis may require the pile tip elevations to be driven deeper for stability purposes. This file only evaluates the vertical load requirements based on the boring capacity curves.

Calculate the pile length required.....

$$pile_{length} := (UBC - 175.97 \cdot Ton) \cdot \left(\frac{29.5 \cdot ft - 26.2 \cdot ft}{205.74 \cdot Ton - 175.97 \cdot Ton} \right) \ldots + 26.2 \cdot ft$$

$$pile_{length} = 28\,ft$$

Calculate the pile tip elevation required:

$$pile_{tip} := (UBC - 175.97 \cdot Ton) \cdot \left(\frac{-21.0 \cdot ft - -17.8 \cdot ft}{205.74 \cdot Ton - 175.97 \cdot Ton} \right) + -17.8 \cdot$$

$$pile_{tip} = -19.6\,ft$$

...based on the Estimated Davisson pile capacity curve given above, the pile lengths for vertical load will require a specified Tip Elevation = -19.6 ft. Therefore, the pile in the ground length is 28.0 ft.

Defined Units

Pier Footing Design

References

Reference:F:\HDRDesignExamples\Ex1_PCBeam\309PierPiles.mcd(R)

Description

This document provides the criteria for the pier footing design. For this design example, only column 1 footing will be evaluated.

Page Contents

Page	Contents
281	**LRFD Criteria**
282	**A. Input Variables**
	A1. Design Parameters
	A2. Pile Layout
	A3. Flexural Design Parameters
	A4. Moments - Y Critical Section
	A5. Moments - X Critical Section
	A6. Design Moments
287	**B. Flexural Design**
	B1. Transverse Flexural Design [LRFD 5.7.3.2]
	B2. Transverse Limits for Reinforcement [LRFD 5.7.3.3]
	B3. Transverse Crack Control by Distribution Reinforcement [LRFD 5.7.3.4]
	B4. Longitudinal Flexural Design [LRFD 5.7.3.2]
	B5. Longitudinal Limits for Reinforcement [LRFD 5.7.3.3]
	B6. Longitudinal Crack Control by Distribution Reinforcement [LRFD 5.7.3.4]
	B7. Shrinkage and Temperature Reinforcement [LRFD 5.10.8.2]
	B8. Mass Concrete Provisions
297	**C. Shear Design Parameters [LRFD 5.13.3.6]**
	C1. Shear Design Parameters - One Way Shear
	C2. b and q parameters [LRFD 5.8.3.4.2]
	C3. One Way Shear - Y Critical Section
	C4. One Way Shear - X Critical Section
	C5. Two Way Shear Design (Punching Shear)
304	**D. Design Summary**

LRFD Criteria

STRENGTH I - Basic load combination relating to the normal vehicular use of the bridge without wind.

WA = 0 For superstructure design, water load and stream pressure are not applicable.

FR = 0 No friction forces.

TU Uniform temperature load effects on the pier will be generated by the substructure analysis model (Larsa 2000).

$$Strength1 = 1.25 \cdot DC + 1.50 \cdot DW + 1.75 \cdot LL + 0.50 \cdot (TU + CR + SH)$$

SERVICE I - Load combination relating to the normal operational use of the bridge with a 55 MPH wind and all loads taken at their nominal values.

$$Service1 = 1.0 \cdot DC + 1.0 \cdot DW + 1.0 \cdot LL + 1.0 \cdot BR + 0.3WS + 1.0 \cdot WL + 1.0 \cdot (TU + CR + SH$$

"For the footing, utilized only to check for crack control"

A. Input Variables

A1. Design Parameters

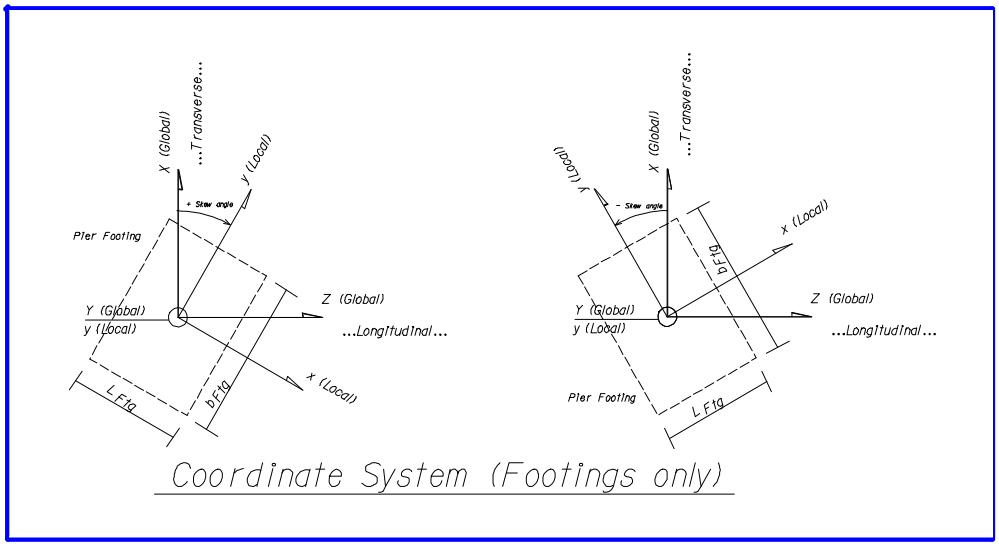

Transverse dimension of footing..... $b_{Ftg} = 12\,ft$

Longitudinal dimension of footing..... $L_{Ftg} = 7.5\,ft$

Depth of footing..... $h_{Ftg} = 4\,ft$

Area of footing..... $A_{ftg} := b_{Ftg} \cdot L_{Ftg}$

$A_{ftg} = 90\,ft^2$

Embedment of pile in footing..... $Pile_{embed} = 1\,ft$

Concrete cover above piles..... $cover_{pile} := 3 \cdot in$

Height of surcharge (column height in ground)..... $h_{Surcharge} := 2.0 \cdot ft$

Diameter of column..... $b_{Col} = 4\,ft$

Area of column..... $A_{Col} := \pi \cdot \frac{(b_{Col})^2}{4}$

$A_{Col} = 12.6\,ft^2$

Equivalent square width for the circular column **[LRFD 5.13.3.4]**:..... $b_{Col.eff} := round\left(\sqrt{A_{Col}}, 1\right)$

$b_{Col.eff} =$ ▮

A2. Pile Layout

Pile size..... $Pile_{size} = 18\,in$

Number of piles..... $n_{pile} = 6$

Summary of pile loads

			Service I Limit State		Strength I Limit State	
Pile #	**x Coord.**	**y Coord.**	**Q, Tons**	**Q, kips**	**Qu, Tons**	**Qu, kips**
0	2.25	-4.5	45.1	90.2	67.6	135.2
1	2.25	0	76.9	153.9	96.3	192.6
2	2.25	4.5	108.8	217.5	125.0	250.1
3	-2.25	4.5	81.9	163.8	100.9	201.8
4	-2.25	0	50.1	100.1	72.2	144.4
5	-2.25	-4.5	18.2	36.5	43.5	86.9

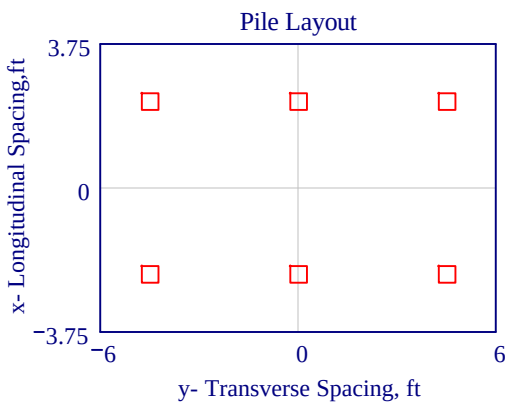

A3. Flexural Design Parameters

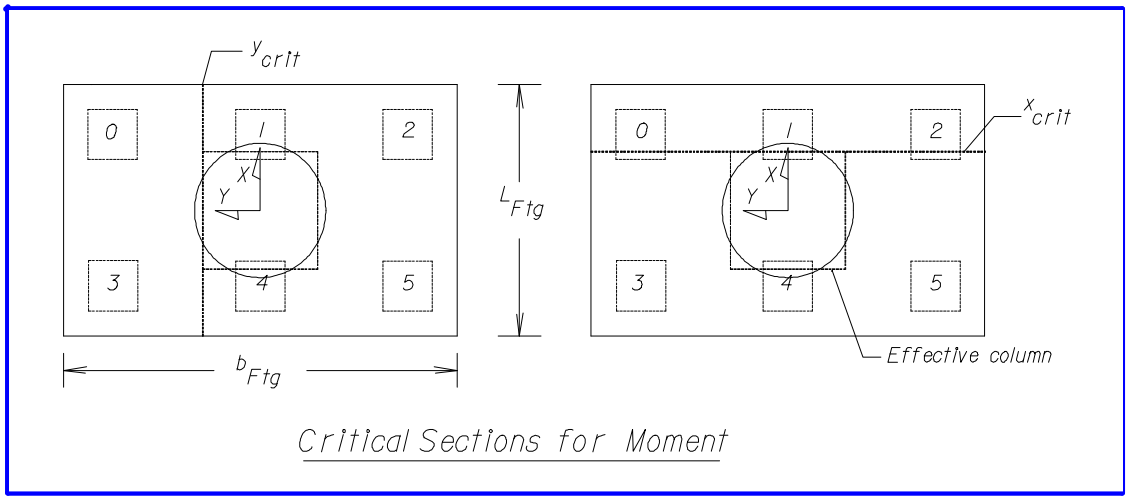

Distance from centerline of piles to edge of footing.....

$pile_{edge} := 1.5ft$

$pile_{edge} = 1.5\ ft$

Distance from x-critical section (face of effective column) to edge of footing along the x-axis.....

$x_{edge} := \frac{L_{Ftg} - b_{Col.eff}}{2}$

$x_{edge} = ▮$

Distance from x-critical section to centerline of piles along the x-axis.....

$x_{crit} := x_{edge} - pile_{edge}$

$x_{crit} = ▮$

Distance from y-critical section (face of effective column) to edge of footing along the y-axis.....

$y_{edge} := \frac{b_{Ftg} - b_{Col.eff}}{2}$

$y_{edge} = ▮$

Distance from y-critical section to centerline of piles along the y-axis.....

$y_{crit} := y_{edge} - pile_{edge}$

$y_{crit} = ▮$

A4. Moments - Y Critical Section

Unfactored pile loads contributing to transverse moment.....

$P := \max(Q_0 + Q_3, Q_2 + Q_5)$

$P = 254\ kip$

Unfactored moments at critical section due to pile loads.....

$Mx_{Pile} := P \cdot y_{crit}$

$Mx_{Pile} = ▮\ kip \cdot ft$

Unfactored moment at critical section due to footing weight.....

$Mx_{Ftg} := (L_{Ftg} \cdot h_{Ftg} \cdot \gamma_{conc}) \cdot \frac{y_{edge}^2}{2}$

$Mx_{Ftg} = ▮\ kip \cdot ft$

Unfactored moments at critical section due to surcharge .....

$Mx_{Surcharge} := (L_{Ftg} \cdot h_{Surcharge} \cdot \gamma_{soil}) \cdot \frac{y_{edge}^2}{2}$

$Mx_{Surcharge} = ▮\ kip \cdot ft$

Factored pile loads contributing to transverse moment.....

$P_u := \max\left(Q_{u_0} + Q_{u_3}, Q_{u_2} + Q_{u_5}\right)$

$P_u = 337\,kip$

Assure the critical section is within the footing dimensions.....

$P_u := \text{if}\left(y_{crit} \geq y_{edge}, 0 \cdot kip, P_u\right)$

$P_u = \blacksquare\,kip$

Factored moments at critical section due to pile loads.....

$Mux_{Pile} := P_u \cdot y_{crit}$

$Mux_{Pile} = \blacksquare\,kip \cdot ft$

A5. Moments - X Critical Section

Unfactored pile loads contributing to longitudinal moment.....

$P := \max\left(Q_0 + Q_1 + Q_2, Q_3 + Q_4 + Q_5\right)$

$P = 462\,kip$

Unfactored moments at critical section due to pile loads.....

$My_{Pile} := P \cdot x_{crit}$

$My_{Pile} = \blacksquare\,kip \cdot ft$

Unfactored moment at critical section due to footing weight.....

$My_{Ftg} := \left(b_{Ftg} \cdot h_{Ftg} \cdot \gamma_{conc}\right) \cdot \frac{x_{edge}^2}{2}$

$My_{Ftg} = \blacksquare\,kip \cdot ft$

Unfactored moments at critical section due to surcharge.....

$My_{Surcharge} := \left(b_{Ftg} \cdot h_{Surcharge} \cdot \gamma_{soil}\right) \cdot \frac{x_{edge}^2}{2}$

$My_{Surcharge} = \blacksquare\,kip \cdot ft$

Factored pile loads contributing to longitudinal moment.....

$P_u := \max\left(Q_{u_0} + Q_{u_1} + Q_{u_2}, Q_{u_3} + Q_{u_4} + Q_{u_5}\right)$

$P_u = 578\,kip$

Assure the critical section is within the footing dimensions.....

$P_u := \text{if}\left(x_{crit} \geq x_{edge}, 0 \cdot kip, P_u\right)$

$P_u = \blacksquare\,kip$

Factored moments at critical section due to pile loads.....

$Muy_{Pile} := P_u \cdot x_{crit}$

$Muy_{Pile} = \blacksquare\,kip \cdot ft$

A6. Design Moments

Transverse Footing Design (Mx moments) - Strength I.....

$Mx_{Strength1} := Mux_{Pile} - 1.25 \cdot Mx_{Ftg} - 1.50 \cdot Mx_{Surcharge}$

$Mx_{Strength1} = \blacksquare\ kip \cdot ft$

Transverse Footing Design (Mx moments) - Service I.....

$Mx_{Service1} := 1.0 \cdot Mx_{Pile} - 1.0 \cdot Mx_{Ftg} - 1.0 \cdot Mx_{Surcharge}$

$Mx_{Service1} = \blacksquare\ kip \cdot ft$

Longitudinal Footing Design (My moments) - Strength I.....

$My_{Strength1} := Muy_{Pile} - 1.25 \cdot My_{Ftg} - 1.50 \cdot My_{Surcharge}$

$My_{Strength1} = \blacksquare\ kip \cdot ft$

Longitudinal Footing Design (My moments) - Service I.....

$My_{Service1} := 1.0 \cdot My_{Pile} - 1.0 \cdot My_{Ftg} - 1.0 \cdot My_{Surcharge}$

$My_{Service1} = \blacksquare\ kip \cdot ft$

B. Flexural Design

B1. Transverse Flexural Design [LRFD 5.7.3.2]

The design procedure consists of calculating the reinforcement required to satisfy the design moment, then checking this reinforcement against criteria for crack control, minimum reinforcement, maximum reinforcement, shrinkage and temperature reinforcement, and distribution of reinforcement. The procedure is the same for both the transverse and longitudinal moment designs.

Factored resistance..... $M_r = \phi \cdot M_n$

Nominal flexural resistance.....

$$M_n = A_{ps} \cdot f_{ps} \cdot \left(d_p - \frac{a}{2}\right) + A_s \cdot f_y \cdot \left(d_s - \frac{a}{2}\right) - A'_s \cdot f'_y \cdot \left(d'_s - \frac{a}{2}\right) + 0.85 \cdot f'_c \cdot (b - b_w) \cdot \beta_1 \cdot h_f \cdot \left(\frac{a}{2} - \frac{h_f}{2}\right)$$

For a rectangular, non-prestressed section, $M_n = A_s \cdot f_y \cdot \left(d_s - \frac{a}{2}\right)$

$$a = \frac{A_s \cdot f_y}{0.85 \cdot f'_c \cdot b}$$

Using variables defined in this example,

Factored resistance..... $M_r := Mx_{Strength1}$

$M_r = \blacksquare\ ft \cdot kip$

Width of section $b := L_{Ftg}$

$b = 7.5\ ft$

Initial assumption for area of steel required

Number of bars..... $n_{ybar} := 8$

Size of bar..... $ybar := "9"$

*(**Note**: Bar size and spacing are governed by crack control criteria and not bending capacity).*

Note: if bar spacing is "-1", the spacing is less than 3", and a bigger bar size should be selected.

Bar area..... $A_{bar} = 1.000\ in^2$

Bar diameter..... $ybar_{dia} = 1.128\ in$

Equivalent bar spacing..... $ybar_{spa} = 11.8\ in$

Area of steel provided..... $A_s := n_{ybar} \cdot A_{bar}$

$A_s = 8.00\ in^2$

Distance from extreme compressive fiber to centroid of reinforcing steel.....

$$d_s := h_{Ftg} - cover_{pile} - Pile_{embed} - \frac{ybar_{dia}}{2}$$

$d_s = 32.436\,in$

Solve the quadratic equation for the area of steel required.....

$$\text{Given} \quad M_r = \phi \cdot A_s \cdot f_y \cdot \left[d_s - \frac{1}{2} \cdot \left(\frac{A_s \cdot f_y}{0.85 \cdot f_{c.sub} \cdot b} \right) \right]$$

Area of steel required.....

$$A_{s.reqd} := \text{Find}(A_s)$$

$A_{s.reqd} = \blacksquare\ in^2$

The area of steel provided, $A_s = 8.00\,in^2$, should be greater than the area of steel required, $A_{s.reqd} = \blacksquare\ in^2$. If not, decrease the spacing of the reinforcement. Once A_s is greater than $A_{s.reqd}$, the proposed reinforcing is adequate for the applied moments.

Moment capacity provided.....

$$M_{r.tran} := \phi \cdot A_s \cdot f_y \cdot \left[d_s - \frac{1}{2} \cdot \left(\frac{A_s \cdot f_y}{0.85 \cdot f_{c.sub} \cdot b} \right) \right]$$

$M_{r.tran} = 1147.2\,ft \cdot kip$

B2. Transverse Limits for Reinforcement [LRFD 5.7.3.3]

Maximum Reinforcement

The maximum reinforcement requirements ensure the section has sufficient ductility and is not overreinforced.

Area of steel provided.....

$A_s = 8.00\,in^2$

Stress block factor.....

$$\beta_1 := \max\left[0.85 - 0.05 \cdot \left(\frac{f_{c.sub} - 4000 \cdot psi}{1000 \cdot psi} \right), 0.65 \right]$$

$\beta_1 = 0.775$

Distance from extreme compression fiber to the neutral axis of section.....

$$c := \frac{A_s \cdot f_y}{0.85 \cdot f_{c.sub} \cdot \beta_1 \cdot b}$$

$c = 1.472\,in$

Depth of equivalent stress block.....

$$a := c \cdot \beta_1$$

$a = 1.141\,in$

Effective depth from extreme compression fiber to centroid of tensile reinforcement...

$$d_e = \frac{A_{ps} \cdot f_{ps} \cdot d_p + A_s \cdot f_y \cdot d_s}{A_{ps} \cdot f_{ps} + A_s \cdot f_y}$$

for non-prestressed sections.....

$$d_e := d_s$$

$d_e = 32.4\,in$

The $\frac{c}{d_e} = 0.045$ ratio should be less than 0.42 to satisfy maximum reinforcement requirements.

$$LRFD_{5.7.3.3.1} := \begin{cases} \text{"OK, maximum reinforcement requirement for transverse moment is satisfied"} & \text{if } \frac{c}{d_e} \le 0.42 \\ \text{"NG, section is over-reinforced, see LRFD equation C5.7.3.3.1-1"} & \text{otherwise} \end{cases}$$

$LRFD_{5.7.3.3.1}$ = "OK, maximum reinforcement requirement for transverse moment is satisfied"

Minimum Reinforcement

The minimum reinforcement requirements ensure the moment capacity provided is at least 1.2 times greater than the cracking moment.

Modulus of rupture..... $f_r := 0.24 \cdot \sqrt{f_{c.sub} \cdot ksi}$

$f_r = 562.8\ psi$

Section modulus of the footing above the piles..... $S := \frac{L_{Ftg} \cdot (h_{Ftg} - Pile_{embed})^2}{6}$

$S = 11.3\ ft^3$

Cracking moment..... $M_{cr} := f_r \cdot S$

$M_{cr} = 911.8\ kip \cdot ft$

Required flexural resistance..... $M_{r.reqd} := \min(1.2 \cdot M_{cr}, 133 \cdot \% \cdot M_r)$

$M_{r.reqd} = \blacksquare\ ft \cdot kip$

Check that the capacity provided, $M_{r.tran} = 1147.2\ ft \cdot kip$, exceeds minimum requirements, $M_{r.reqd} = \blacksquare\ ft \cdot kip$.

$$LRFD_{5.7.3.3.2} := \begin{cases} \text{"OK, minimum reinforcement for transverse moment is satisfied"} & \text{if } M_{r.tran} \ge M_{r.reqd} \\ \text{"NG, reinforcement for transverse moment is less than minimum"} & \text{otherwise} \end{cases}$$

$LRFD_{5.7.3.3.2} = \blacksquare$

B3. Transverse Crack Control by Distribution Reinforcement [LRFD 5.7.3.4]

Concrete is subjected to cracking. Limiting the width of expected cracks under service conditions increases the longevity of the structure. Potential cracks can be minimized through proper placement of the reinforcement. The check for crack control requires that the actual stress in the reinforcement should not exceed the service limit state stress (LRFD 5.7.3.4). The stress equations emphasize bar spacing rather than crack widths.

Stress in the mild steel reinforcement at the service limit state.....

$$f_{sa} = \frac{z}{(d_c \cdot A)^{\frac{1}{3}}} \le 0.6 \cdot f_y$$

Crack width parameter.....

$$z = \begin{pmatrix} \text{"moderate exposure"} & 170 \\ \text{"severe exposure"} & 130 \\ \text{"buried structures"} & 100 \end{pmatrix} \cdot \frac{kip}{in}$$

$$z := 170 \cdot \frac{kip}{in}$$

Distance from extreme tension fiber to center of closest bar (concrete cover need not exceed 2 in.).....

$$d_c := \min\left(h_{Ftg} - d_s, 2 \cdot in + \frac{ybar_{dia}}{2}\right)$$

$$d_c = 2.564\,in$$

Number of bars.....

$$n_{ybar} = 8$$

Effective tension area of concrete surrounding the flexural tension reinforcement.....

$$A := \frac{(b) \cdot (2 \cdot d_c)}{n_{ybar}}$$

$$A = 57.7\,in^2$$

Service limit state stress in reinforcement..

$$f_{sa} := \min\left[\frac{z}{(d_c \cdot A)^{\frac{1}{3}}}, 0.6 \cdot f_y\right]$$

$$f_{sa} = 32.1\,ksi$$

The neutral axis of the section must be determined to calculate the actual stress in the reinforcement. This process is iterative, so an initial assumption of the neutral axis must be made.

$$x := 6.0 \cdot in$$

Given $\frac{1}{2} \cdot b \cdot x^2 = \frac{E_s}{E_{c.sub}} \cdot A_s \cdot (d_s - x)$

$$x_{na} := \text{Find}(x)$$

$$x_{na} = 6.0\,in$$

Compare the calculated neutral axis x_{na} with the initial assumption x. If the values are not equal, adjust $x = 6.0\,in$ to equal $x_{na} = 6.0\,in$.

Tensile force in the reinforcing steel due to service limit state moment. .....

$$T_s := \frac{Mx_{Service1}}{d_s - \frac{x_{na}}{3}}$$

$T_s = \blacksquare\ kip$

Actual stress in the reinforcing steel due to service limit state moment.....

$$f_{s.actual} := \frac{T_s}{A_s}$$

$f_{s.actual} = \blacksquare\ ksi$

The service limit state stress in the reinforcement should be greater than the actual stress due to the service limit state moment.

$$LRFD_{5.7.3.3.4} := \begin{cases} \text{"OK, crack control for transverse moment"} & \text{if } f_{s.actual} \le f_{sa} \\ \text{"NG, crack control for transverse moment, provide more reinforcement"} & \text{otherwise} \end{cases}$$

$LRFD_{5.7.3.3.4} = \blacksquare$

B4. Longitudinal Flexural Design [LRFD 5.7.3.2]

Factored resistance..... $M_r = \phi \cdot M_n$

Using variables defined in this example,

Factored resistance..... $M_r := My_{Strength1}$

Width of section..... $b := b_{Ftg}$

$b = 12\,ft$

Initial assumption for area of steel required

Number of bars..... $n_{xbar} := 12$

Size of bar..... $xbar := \text{"6"}$

Note: if bar spacing is "-1", the spacing is less than 3", and a bigger bar size should be selected.

Bar area..... $A_{bar} = 0.440\,in^2$

Bar diameter..... $xbar_{dia} = 0.750\,in$

Equivalent bar spacing..... $xbar_{spa} = 12.4\,in$

Area of steel provided..... $A_s := n_{xbar} \cdot A_{bar}$

$A_s = 5.28\,in^2$

Distance from extreme compressive fiber to centroid of reinforcing steel..... $d_s := h_{Ftg} - cover_{pile} - Pile_{embed} - ybar_{dia} - \frac{xbar_{dia}}{2}$

$d_s = 31.497\,in$

Solve the quadratic equation for the area of steel required..... Given $M_r = \phi \cdot A_s \cdot f_y \cdot \left[d_s - \frac{1}{2} \cdot \left(\frac{A_s \cdot f_y}{0.85 \cdot f_{c.sub} \cdot b} \right) \right]$

Area of steel required..... $A_{s.reqd} := Find(A_s)$

$A_{s.reqd} = \blacksquare\,in^2$

The area of steel provided, $A_s = 5.28\,in^2$, should be greater than the area of steel required, $A_{s.reqd} = \blacksquare\,in^2$. If not, decrease the spacing of the reinforcement. Once A_s is greater than $A_{s.reqd}$, the proposed reinforcing is adequate for the applied moments.

Moment capacity provided..... $M_{r.long} := \phi \cdot A_s \cdot f_y \cdot \left[d_s - \frac{1}{2} \cdot \left(\frac{A_s \cdot f_y}{0.85 \cdot f_{c.sub} \cdot b} \right) \right]$

$M_{r.long} = 742.8\,ft \cdot kip$

B5. Longitudinal Limits for Reinforcement [LRFD 5.7.3.3]

Maximum Reinforcement

The maximum reinforcement requirements ensure the section has sufficient ductility and is not overreinforced.

Area of steel provided.....

$A_s = 5.28\,in^2$

Distance from extreme compression fiber to the neutral axis of section..... $c := \frac{A_s \cdot f_y}{0.85 \cdot f_{c.sub} \cdot \beta_1 \cdot b}$

$c = 0.607\,in$

Depth of equivalent stress block..... $a := c \cdot \beta_1$

$a = 0.471\,in$

Effective depth from extreme compression fiber to centroid of the tensile reinforcement..... $d_e = \frac{A_{ps} \cdot f_{ps} \cdot d_p + A_s \cdot f_y \cdot d_s}{A_{ps} \cdot f_{ps} + A_s \cdot f_y}$

for non-prestressed sections..... $d_e := d_s$

$d_e = 31.5\,in$

The $\frac{c}{d_e} = 0.019$ ratio should be less than 0.42 to satisfy maximum reinforcement requirements.

$$LRFD_{5.7.3.3.1} := \begin{cases} \text{"OK, maximum reinforcement requirement for longitudinal moment is satisfied"} & \text{if } \frac{c}{d_e} \le 0.42 \\ \text{"NG, section is over-reinforced, see LRFD equation C5.7.3.3.1-1"} & \text{otherwise} \end{cases}$$

$LRFD_{5.7.3.3.1}$ = "OK, maximum reinforcement requirement for longitudinal moment is satisfied"

Minimum Reinforcement

The minimum reinforcement requirements ensure the moment capacity provided is at least 1.2 times greater than the cracking moment.

Modulus of rupture.....

$f_r = 562.8\,psi$

Section modulus of the footing above piles $\quad S := \frac{b_{Ftg} \cdot (h_{Ftg} - Pile_{embed})^2}{6}$

$S = 18.0\,ft^3$

Cracking moment..... $\quad M_{cr} := f_r \cdot S$

$M_{cr} = 1458.9\,kip \cdot ft$

Required flexural resistance..... $\quad M_{r.reqd} := \min(1.2 \cdot M_{cr}, 133 \cdot \% \cdot M_r)$

$M_{r.reqd} = ▮\,ft \cdot kip$

Check that the capacity provided, $M_{r.long} = 742.8\,ft \cdot kip$, exceeds minimum requirements, $M_{r.reqd} = ▮\,ft \cdot kip$.

$$LRFD_{5.7.3.3.2} := \begin{cases} \text{"OK, minimum reinforcement for longitudinal moment is satisfied"} & \text{if } M_{r.long} \ge M_{r.reqd} \\ \text{"NG, reinforcement for longitudinal moment is less than minimum"} & \text{otherwise} \end{cases}$$

$LRFD_{5.7.3.3.2} = ▮$

B6. Longitudinal Crack Control by Distribution Reinforcement [LRFD 5.7.3.4]

Stress in the mild steel reinforcement at the service limit state.....

$$f_{sa} = \frac{z}{(d_c \cdot A)^{\frac{1}{3}}} \le 0.6 \cdot f_y$$

Crack width parameter.....

$$z = \begin{pmatrix} \text{"moderate exposure"} & 170 \\ \text{"severe exposure"} & 130 \\ \text{"buried structures"} & 100 \end{pmatrix} \cdot \frac{kip}{in}$$

$$z := 170 \cdot \frac{kip}{in}$$

Distance from extreme tension fiber to center of closest bar (concrete cover need not exceed 2 in.).....

$$d_c := \min\left(h_{Ftg} - d_s, 2 \cdot in + ybar_{dia} + \frac{xbar_{dia}}{2}\right)$$

$$d_c = 3.503\,in$$

Number of bars.....

$$n_{xbar} = 12$$

Effective tension area of concrete surrounding the flexural tension reinforcement.....

$$A := \frac{(b) \cdot (2 \cdot d_c)}{n_{xbar}}$$

$$A = 84.1\,in^2$$

Service limit state stress in reinforcement..

$$f_{sa} := \min\left[\frac{z}{(d_c \cdot A)^{\frac{1}{3}}}, 0.6 \cdot f_y\right]$$

$$f_{sa} = 25.6\,ksi$$

The neutral axis of the section must be determined to determine the actual stress in the reinforcement. This process is iterative, so an initial assumption of the neutral axis must be made.

$$x := 3.9 \cdot in$$

Given $\frac{1}{2} \cdot b \cdot x^2 = \frac{E_s}{E_{c.sub}} \cdot A_s \cdot (d_s - x)$

$$x_{na} := \text{Find}(x)$$

$$x_{na} = 3.9\,in$$

Compare the calculated neutral axis x_{na} with the initial assumption x. If the values are not equal, adjust $x = 3.9\,in$ to equal $x_{na} = 3.9\,in$.

Tensile force in the reinforcing steel due to service limit state moment.....

$$T_s := \frac{My_{Service1}}{d_s - \frac{x_{na}}{3}}$$

$T_s = \blacksquare\ kip$

Actual stress in the reinforcing steel due to service limit state moment.....

$$f_{s.actual} := \frac{T_s}{A_s}$$

$f_{s.actual} = \blacksquare\ ksi$

The service limit state stress in the reinforcement should be greater than the actual stress due to the service limit state moment.

$$LRFD_{5.7.3.3.4} := \begin{cases} \text{"OK, crack control for longitudinal moment"} & \text{if } f_{s.actual} \le f_{sa} \\ \text{"NG, crack control for longitudinal moment, provide more reinforcement"} & \text{otherwise} \end{cases}$$

$LRFD_{5.7.3.3.4} = \blacksquare$

B7. Shrinkage and Temperature Reinforcement [LRFD 5.10.8.2]

Initial assumption for area of steel required

Size of bar.....

$$bar_{st} := \begin{cases} \text{"5"} & \text{if } (L_{Ftg} < 48in)\cdot(b_{Ftg} < 48in)\cdot(h_{Ftg} < 48in) \\ \text{"6"} & \text{otherwise} \end{cases}$$

$bar_{st} = \text{"6"}$

Spacing of bar.....

$bar_{spa.st} := 12\cdot in$

Bar area.....

$A_{bar} = 0.44\,in^2$

Bar diameter.....

$dia = 0.750\,in$

Maximum spacing of shrinkage and temperature reinforcement.....

$$spacing_{shrink.temp} := \min\left(\frac{100\cdot A_{bar}}{\min(2\cdot d_c + dia, 3in)}, 18\cdot in\right)$$

$spacing_{shrink.temp} = 14.7\,in$

The bar spacing should be less than the maximum spacing for shrinkage and temperature reinforcement

$$LRFD_{5.7.10.8} := \begin{cases} \text{"OK, minimum shrinkage and temperature requirements"} & \text{if } bar_{spa.st} \le spacing_{shrink.temp} \\ \text{"NG, minimum shrinkage and temperature requirements"} & \text{otherwise} \end{cases}$$

$LRFD_{5.7.10.8} = \text{"OK, minimum shrinkage and temperature requirements"}$

B8. Mass Concrete Provisions

Volume to surface area ratio for footing....

$$Ratio_{VS} := \frac{b_{Ftg} \cdot h_{Ftg} \cdot L_{Ftg}}{2 \cdot b_{Ftg} \cdot L_{Ftg} + \left(2b_{Ftg} + 2L_{Ftg}\right) \cdot h_{Ftg}}$$

$$Ratio_{VS} = 1.071\ ft$$

Mass concrete provisions apply if the volume to surface area ratio exceeds 1 ft and any dimension exceeds 3 feet

$$SDG_{3.9} := \begin{cases} \text{"Use mass concrete provisions"} & \text{if } Ratio_{VS} > 1.0 \cdot ft \wedge \left(b_{Ftg} > 3ft \vee h_{Ftg} > 3ft\right) \\ \text{"Use regular concrete provisions"} & \text{otherwise} \end{cases}$$

$$SDG_{3.9} = \text{"Use mass concrete provisions"}$$

C. Shear Design Parameters [LRFD 5.13.3.6]

C1. Shear Design Parameters - One Way Shear

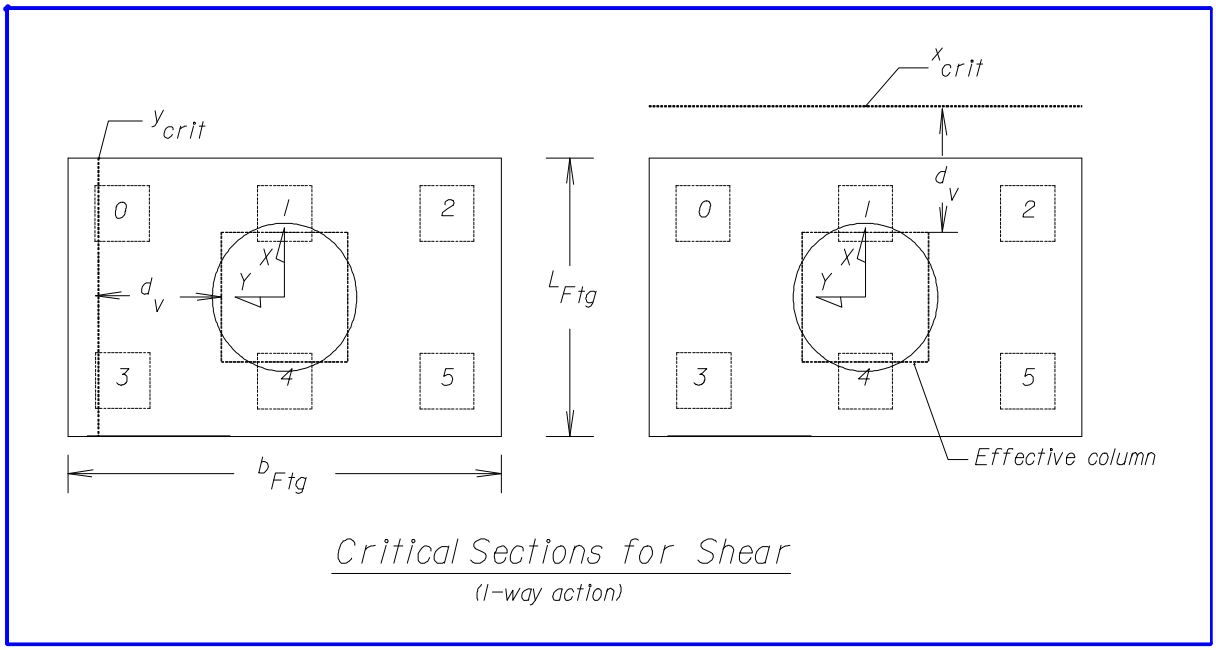

Distance from extreme compression fiber to centroid of tension steel (use the top of the main transverse steel or bottom of the longitudinal steel)..... $d_e := h_{Ftg} - Pile_{embed} - cover_{pile} - ybar_{dia}$

$d_e = 2.656\,ft$

Effective shear depth **[LRFD 5.8.2.9]**..... $d_v = maxval(0.9 \cdot d_e, 0.72 \cdot h)$

Using variables defined in this example, $d_v := max[0.9 \cdot d_e, 0.72 \cdot (h_{Ftg} - Pile_{embed})]$

$d_v = 2.39\,ft$

C2. b and q Parameters [LRFD 5.8.3.4.2]

Tables are give in LRFD to determine β from the longitudinal strain and crack spacing parameter, so these values need to be calculated.

Longitudinal strain for sections with no prestressing or transverse reinforcement...

$$\varepsilon_x = \frac{\frac{M_u}{d_v} + 0.5 \cdot V_u \cdot \cot(\theta)}{E_s \cdot A_s}$$

Effective width..... $b_v = 4.5\,ft$

Effective shear depth..... $d_v = 2.39\,ft$

Factor indicating ability of diagonally cracked concrete to transmit tension.. β

Angle of inclination for diagonal compressive stresses..... θ

*(**Note**: Values of $\beta = 2$ and $\theta = 45 \cdot deg$ cannot be assumed since footings are typically not transversely reinforced for shear.)*

Crack spacing parameter..... $s_{xe} = \min\left(s_x \cdot \frac{1.38}{a_g + 0.63}, 80 \cdot in\right)$

Maximum aggregate size..... $a_g := 1.5 \cdot in$

The variable s_x is the lesser of d_v or the maximum distance between layers of longitudinal reinforcement..... $s_x := d_v$

LRFD Table 5.8.3.4.2-2 presents values of θ and β for sections without transverse reinforcement . LRFD C5.8.3.4.2 states that data given by the table may be used over a range of values. Linear interpolation may be used, but is not recommended for hand calculations.

Table 5.8.3.4.2-2 - Values of θ and β for Sections without Transverse Reinforcement

s_{xe} (IN)	ε_x x 1000										
	≤-0.20	≤-0.10	≤-0.05	≤0	≤0.125	≤0.25	≤0.50	≤0.75	≤1.00	≤1.50	≤2.00
≤5	25.4 6.36	25.5 6.06	25.9 5.56	26.4 5.15	27.7 4.41	28.9 3.91	30.9 3.26	32.4 2.86	33.7 2.58	35.6 2.21	37.2 1.96
≤10	27.6 5.78	27.6 5.78	28.3 5.38	29.3 4.89	31.6 4.05	33.5 3.52	36.3 2.88	38.4 2.50	40.1 2.23	42.7 1.88	44.7 1.65
≤15	29.5 5.34	29.5 5.34	29.7 5.27	31.1 4.73	34.1 3.82	36.5 3.28	39.9 2.64	42.4 2.26	44.4 2.01	47.4 1.68	49.7 1.46
≤20	31.2 4.99	31.2 4.99	31.2 4.99	32.3 4.61	36.0 3.65	38.8 3.09	42.7 2.46	45.5 2.09	47.6 1.85	50.9 1.52	53.4 1.31
≤30	34.1 4.46	34.1 4.46	34.1 4.46	34.2 4.43	38.9 3.39	42.3 2.82	46.9 2.19	50.1 1.84	52.6 1.60	56.3 1.30	59.0 1.10
≤40	36.6 4.06	36.6 4.06	36.6 4.06	36.6 4.06	41.2 3.20	45.0 2.62	50.2 2.00	53.7 1.66	56.3 1.43	60.2 1.14	63.0 0.95
≤60	40.8 3.50	40.8 3.50	40.8 3.50	40.8 3.50	44.5 2.92	49.2 2.32	55.1 1.72	58.9 1.40	61.8 1.18	65.8 0.92	68.6 0.75
≤80	44.3 3.10	44.3 3.10	44.3 3.10	44.3 3.10	47.1 2.71	52.3 2.11	58.7 1.52	62.8 1.21	65.7 1.01	69.7 0.76	72.4 0.62

The longitudinal strain and crack spacing parameter are calculated for the appropriate critical sections.

C3. One Way Shear - Y Critical Section

Factored pile loads contributing to transverse shear ..... $Vu_T := \max\left(Q_{u_0} + Q_{u_3}, Q_{u_2} + Q_{u_5}\right)$

$Vu_T = 337\,kip$

Distance between face of equivalent square column and face of pile.....

$$dy_{face} := \frac{(b_{Ftg} - b_{Col.eff})}{2} - \left(\frac{Pile_{size}}{2} + pile_{edge}\right)$$

$dy_{face} = ▮$

The location of the piles relative to the critical shear plane determines the amount of shear design. According to LRFD, if a portion of the pile lies inside the critical section, the pile load shall be uniformally distributed over the pile width, and the portion of the load outside the critical section shall be included in shear calculations for the critical section.

$$Transverse_{shear} := \begin{cases} \text{"Full shear, piles are outside of the y-critical shear plane"} & \text{if } dy_{face} \ge d_v \\ \text{"No shear, Y-critical shear plane is outside footing dimension"} & \text{if } d_v \ge y_{edge} \\ \text{"Partial shear, piles intersect y-critical shear plane"} & \text{if } dy_{face} < d_v \wedge d_v < y_{edge} \end{cases}$$

$Transverse_{shear} = ▮$

If the piles partially intersect the shear plane, the shear for the critical section can be linearly reduced by the following factor.

$$\psi_y := \begin{cases} 1 & \text{if } dy_{face} \ge d_v \\ 0 & \text{if } d_v \ge y_{edge} \\ \left|1 - \frac{d_v - dy_{face}}{Pile_{size}}\right| & \text{if } dy_{face} < d_v \wedge d_v < y_{edge} \end{cases}$$

$\psi_y = ▮$

Factored shear along transverse y-critical section.....

$$Vu_T := \psi_y \cdot Vu_T$$

$Vu_T = ▮\ kip$

For the longitudinal strain calculations, an initial assumption for θ must be made.....

$\theta_i := 50.9 \cdot deg$

Longitudinal strain.....

$$\varepsilon_x := \frac{\frac{Vu_T \cdot d_v}{d_v} + 0.5 \cdot Vu_T \cdot \cot(\theta_i)}{E_s \cdot As_T} \cdot (1000)$$

$\varepsilon_x = ▮$

Crack width parameter.....

$$s_{xe} := \min\left(s_x \cdot \frac{1.38}{\frac{a_g}{in} + 0.63}, 80 \cdot in\right)$$

$s_{xe} = 19\ in$

Based on **LRFD Table 5.8.3.4.2-2**, the values of θ and β can be approximately taken as:

Angle of inclination of compression stresses

$\theta := 50.9 \cdot deg$

Factor relating to longitudinal strain on the shear capacity of concrete

$\beta := 1.52$

The nominal shear resistance for footings with no prestressing or transverse reinforcing is the minimum of the following equations.....

$V_n = 0.0316 \cdot \beta \cdot \sqrt{f'_c} \cdot b_v \cdot d_v$ or

$V_n = 0.25 \cdot f'_c \cdot b_v \cdot d_v$

Using variables defined in this example, $b_v := L_{Ftg}$

and the correspondig shear values..... $V_{c1} := 0.0316 \cdot \beta \cdot \sqrt{f_{c.sub} \cdot ksi} \cdot b_v \cdot d_v$

$V_{c1} = 290.8\,kip$

$V_{c2} := 0.25 \cdot f_{c.sub} \cdot b_v \cdot d_v$

$V_{c2} = 3549.7\,kip$

Nominal shear resistance..... $V_n := \min(V_{c1}, V_{c2})$

$V_n = 290.8\,kip$

Check the section has adequate shear capacity

$$LRFD_{5.8.3.3} := \begin{cases} \text{"OK, footing depth for Y-critical section is adequate for 1-way shear"} & \text{if } V_n \geq \dfrac{Vu_T}{\phi_v} \\ \text{"NG, footing depth for Y-critical section is not adequate for 1-way shear"} & \text{otherwise} \end{cases}$$

$LRFD_{5.8.3.3} =$ ▮

C4. One Way Shear - X Critical Section

Factored pile loads contributing to longitudinal shear..... $Vu_L := \max\left(Q_{u_0} + Q_{u_1} + Q_{u_2}, Q_{u_3} + Q_{u_4} + Q_{u_5}\right)$

$Vu_L = 578\,kip$

Distance between face of equivalent square column and face of pile..... $dx_{face} := \dfrac{\left(L_{Ftg} - b_{Col.eff}\right)}{2} - \left(\dfrac{Pile_{size}}{2} + pile_{edge}\right)$

$dx_{face} =$ ▮

The location of the piles relative to the critical shear plane determines the amount of shear design.

$$Longitudinal_{shear} := \begin{cases} \text{"Full shear, piles are outside of the x-critical shear plane"} & \text{if } dx_{face} \ge d_v \\ \text{"No shear, X-critical shear plane is outside footing dimension"} & \text{if } d_v \ge x_{edge} \\ \text{"Partial shear, piles intersect x-critical shear plane"} & \text{if } dx_{face} < d_v \wedge d_v < x_{edge} \end{cases}$$

$Longitudinal_{shear} =$ ▮

If the piles partially intersect the shear plane, the shear affecting the critical section can be linearly reduced by the following factor.....

$$\psi_x := \begin{cases} 1 & \text{if } dx_{face} \ge d_v \\ 0 & \text{if } d_v \ge x_{edge} \\ \left| 1 - \dfrac{d_v - dx_{face}}{Pile_{size}} \right| & \text{if } dx_{face} < d_v \wedge d_v < x_{edge} \end{cases}$$

$\psi_x =$ ▮

Factored shear along longitudinal x-critical section.....

$$Vu_L := \psi_x \cdot Vu_L$$

$Vu_L =$ ▮ kip

For the longitudinal strain calculations, an initial assumption for θ must be made.....

$\theta_i := 32.3 \cdot deg$

Longitudinal strain.....

$$\varepsilon_x := \frac{\dfrac{Vu_L \cdot d_v}{d_v} + 0.5 \cdot Vu_L \cdot \cot(\theta_i)}{E_s \cdot As_L} \cdot (1000)$$

$\varepsilon_x =$ ▮

Crack width parameter.....

$$s_{xe} := \min\left(s_x \cdot \frac{1.38}{\dfrac{a_g}{in} + 0.63}, 80 \cdot in \right)$$

$s_{xe} = 19\,in$

Based on **LRFD Table 5.8.3.4.2-2**, the values of θ and β can be approximately taken as:

Angle of inclination of compression stresses

$\theta := 32.3 \cdot deg$

Factor relating to longitudinal strain on the shear capacity of concrete

$\beta := 4.61$

The nominal shear resistance for footings with no prestressing or transverse reinforcing is the minimum of the following equations.....

$V_n = 0.0316 \cdot \beta \cdot \sqrt{f'_c} \cdot b_v \cdot d_v$

$V_n = 0.25 \cdot f'_c \cdot b_v \cdot d_v$

Using variables defined in this example, $b_v := b_{Ftg}$

and the correspondig shear values..... $V_{c1} := 0.0316 \cdot \beta \cdot \sqrt{f_{c.sub} \cdot ksi} \cdot b_v \cdot d_v$

$V_{c1} = 1411.2\ kip$ $V_{c2} := 0.25 \cdot f_{c.sub} \cdot b_v \cdot d_v$

$V_{c2} = 5679.6\ kip$

Nominal shear resistance..... $V_n := \min(V_{c1}, V_{c2})$

$V_n = 1411.2\ kip$

Check the section has adequate shear capacity

$$LRFD_{5.8.3.3} := \begin{cases} \text{"OK, X-critical section footing depth is adequate for 1-way shear"} & \text{if } V_n \geq \dfrac{Vu_L}{\phi_v} \\ \text{"NG, X-critical section footing depth is NO GOOD for 1-way shear"} & \text{otherwise} \end{cases}$$

$LRFD_{5.8.3.3} =$

C5. Two Way Shear Design (Punching Shear)

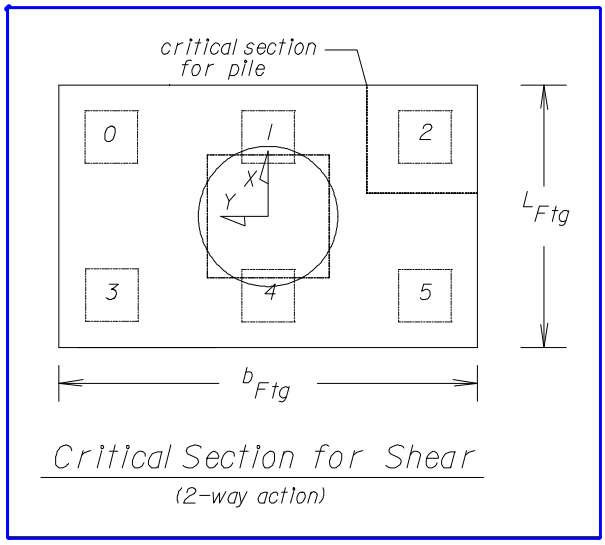

Critical section for 2-way shear **[LRFD 5.13.3.6]**..... $d_{v2} := 0.5 \cdot d_v$

$d_{v2} = 1.2\ ft$

Maximum shear force for pile 2..... $Vu_{pile} := Q_{max}$

$Vu_{pile} = 250.1\ kip$

Nominal shear resistance for 2-way action in sections without shear reinforcement.... $V_n = \left(0.063 + \frac{0.126}{\beta_c}\right) \cdot \left(\sqrt{f_c} \cdot b_o \cdot d_v\right) \le 0.126 \sqrt{f_c} \cdot b_o \cdot d_v$

Perimeter of critical section..... $b_o := 2 \cdot \left(pile_{edge}\right) + Pile_{size}$

$b_o = 4.5\ ft$

Ratio of long side to short side of the rectangle, which the concentrated load or reaction is transmitted

$\beta_c := 1.0$

Nominal shear resistance.....

$$V_n := \min\left[\left(0.063 + \frac{0.126}{\beta_c}\right) \cdot \left(\sqrt{f_{c.sub} \cdot ksi} \cdot b_o \cdot d_v\right), 0.126 \sqrt{f_{c.sub} \cdot ksi} \cdot b_o \cdot d_v\right]$$

$V_n = 457.7\ kip$

$$LRFD_{5.13.3.6.3} := \begin{cases} \text{"OK, Footing depth for 2-way pile punching shear"} & \text{if } V_n > \frac{Vu_{pile}}{\phi_v} \\ \text{"NG, Footing depth for 2-way pile punching shear"} & \text{otherwise} \end{cases}$$

$LRFD_{5.13.3.6.3}$ = "OK, Footing depth for 2-way pile punching shear"

D. Design Summary

Footing properties	Transverse dimension of footing.....	$b_{Ftg} = 12\,ft$	
	Longitudinal dimension of footing.....	$L_{Ftg} = 7.5\,ft$	
	Depth of footing.....	$h_{Ftg} = 4\,ft$	
Bottom reinforcement (transverse)	Number of bars.....	$n_{ybar} = 8$	
	Selected bar size.....	ybar = "9"	
	Approximate spacing.....	$ybar_{spa} = 11.8\,in$	**use 11.5" +/-spacing**
Bottom reinforcement (longitudinal)	Number of bars.....	$n_{xbar} = 12$	
	Selected bar size.....	xbar = "6"	
	Approximate spacing.....	$xbar_{spa} = 12.4\,in$	**use 12" +/-spacing**
Temp and shrinkage (top and side)	Selected bar size.....	bar_{st} = "6"	
	Spacing.....	$bar_{spa.st} = 12\,in$	

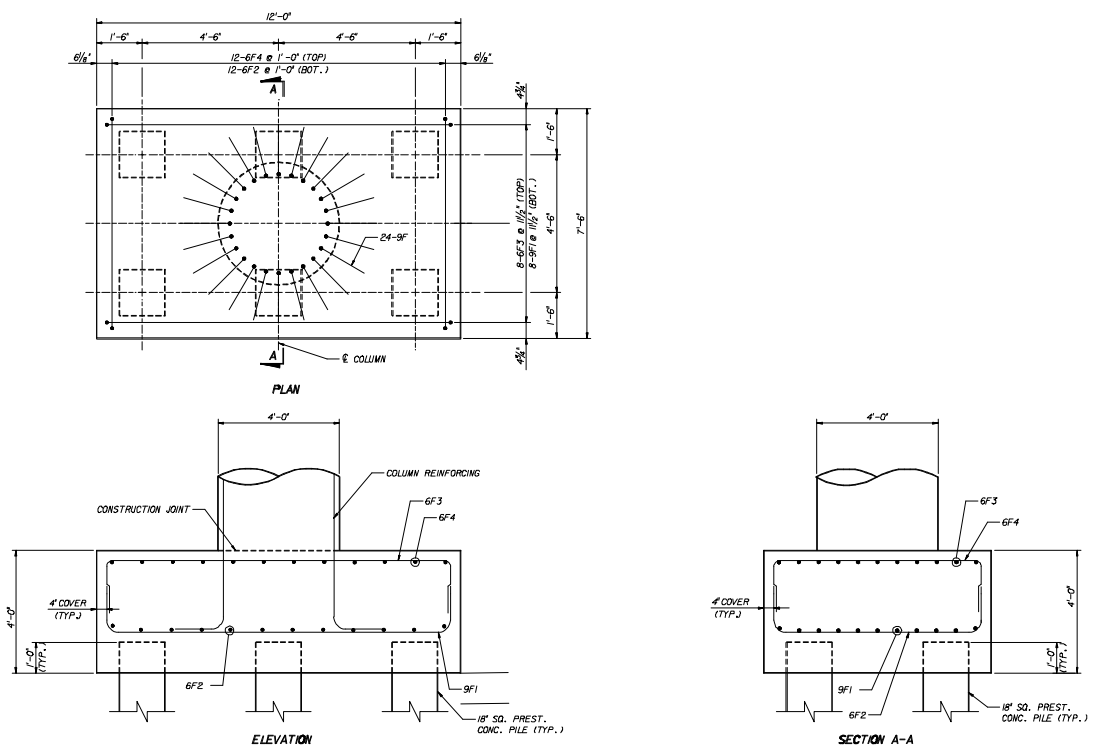

Defined Units

End Bent Live Load Analysis

References

Reference:F:\HDRDesignExamples\Ex1_PCBeam\310PierFtg.mcd(R)

Description

This document provides the criteria for the end bent live load design. Since the piles are placed directly under the beams at the end bent, no positive or negative moment due to live load is introduced in the end bent cap, therefore, the maximum live load placement will try to maximize a beam reaction or pile load.

Page Contents

306 **A. Input Variables**

A1. Shear: Skewed Modification Factor [LRFD 4.6.2.2.3c]

A2. Maximum Live Load Reaction at End Bent - One HL-93 Vehicle

307 **B. Maximum Axial Force**

B1. HL-93 Vehicle Placement for Maximum Axial Load

A. Input Variables

A1. Shear: Skewed Modification Factor [LRFD 4.6.2.2.3c]

Skew modification factor for shear **shall** be applied to the exterior beam at the obtuse corner (θ>90 deg) and to all beams in a multibeam bridge, whereas $g_{v.Skew} = 1.086$.

A2. Maximum Live Load Reaction at Intermediate Pier - Two HL-93 Vehicles

Since each beam is directly over each pile, live load will not contribute to any moments or shears in the bent cap. For the pile design, the live load will not include dynamic amplification since the piles are considered to be in the ground.

Reaction induced by HL-93 truck load..... $V_{truck}(Support) = 64.4\,kip$

Reaction induced by lane load..... $V_{lane}(Support) = 28.2\,kip$

Impact factor..... $IM = 1.33$

The truck reaction (including impact and skew modification factors) is applied on the deck as two wheel-line loads.....

$$wheel_{line} := \left(\frac{V_{truck}(Support)}{2}\right) \cdot g_{v.Skew}$$

$$wheel_{line} = 35.0\,kip$$

The lane load reaction (including skew modification factor) is applied on the deck as a distributed load over the 10 ft lane.....

$$lane_{load} := \left(\frac{V_{lane}(Support)}{10 \cdot ft}\right) \cdot g_{v.Skew}$$

$$lane_{load} = 3.1\,\frac{kip}{ft}$$

The truck wheel-line load and lane load can be placed in design lanes according to one of the following patterns.

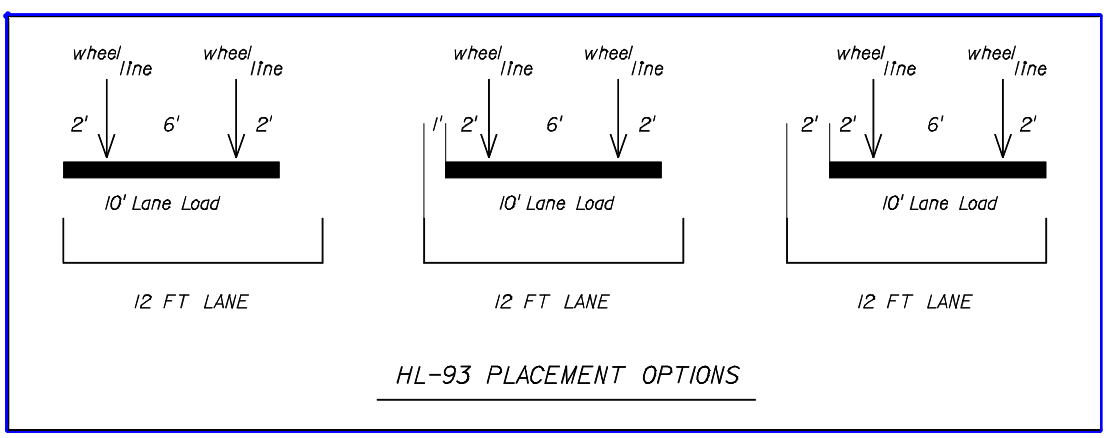

B. Maximum Axial Force

For design live load axial force in the end bent piles, the controlling number and position of design lanes need to be determined. This section shows a means of determining the controlling configuration of design lanes, along with the corresponding beam loads and pile axial forces.

B1. HL-93 Vehicle Placement for Maximum Axial Load

HL-93 vehicle, comprising of wheel line loads and lane loads, should be placed on the deck to maximize the axial force in the end bent piles.

Design Lane Placements

For this example, the lane placements should maximize the axial force in pile 3. Since a pile is placed directly under each beam, placing design lanes above beam 3 will induce the maximum axial force in pile 3.

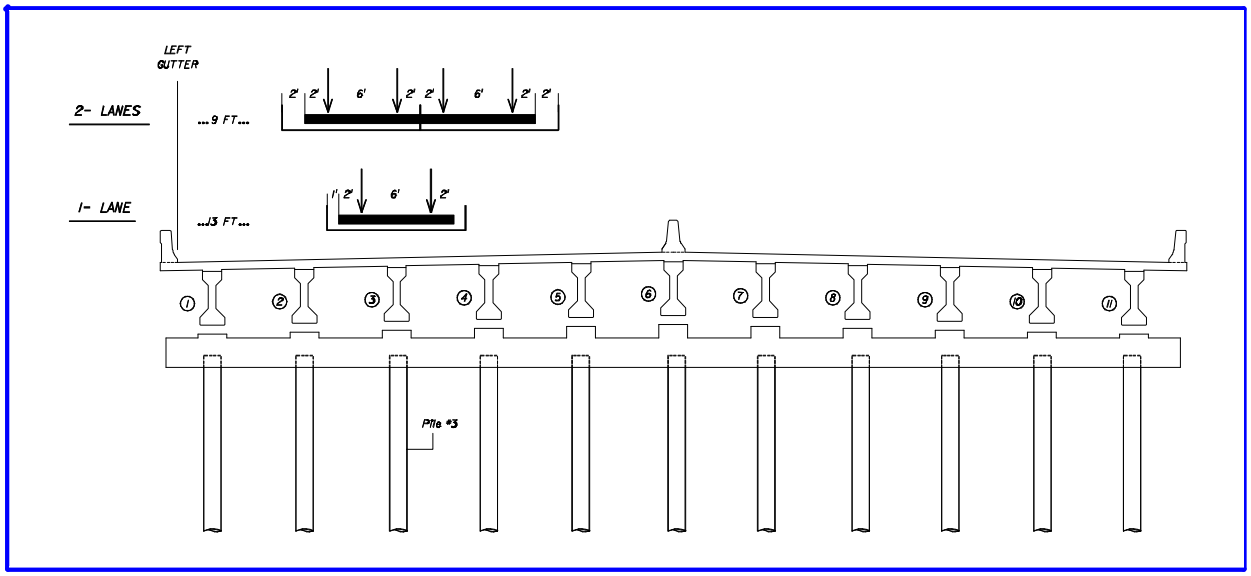

Depending on the number of design lanes, a multiple presence factor (LRFD Table 3.6.1.1.2-1) is applied to the HL-93 wheel line loads and lane load.

$$MPF = \begin{cases} 1.2 & \text{if Number_of_lanes} = 1 \\ 1.0 & \text{if Number_of_lanes} = 2 \\ 0.85 & \text{if Number_of_lanes} = 3 \\ 0.65 & \text{if Number_of_lanes} \geq 4 \end{cases}$$

Corresponding Beam Loads

The live loads from the design lanes are transferred to the substructure through the beams. Utilizing the lever rule, the beam loads corresponding to the design lane configurations are calculated.

	Beam Loads	
Beam	1 Lane	2 Lanes
1	0	0
2	27.6	51.5
3	104.5	111.7
4	27.6	87.9
5	0	15.1
6	0	0
7	0	0
8	0	0
9	0	0
10	0	0
11	0	0

Corresponding Axial Force

Since a pile is directly under each beam, the maximum axial force in pile 3 corresponds to the reaction in beam 3.

	Maximum Axial Force
	Axial Force (k)
1 Lane	104.5
2 Lanes	111.7

The results show that two design lanes govern. The following beam loads, corresponding to the governing maximum axial force, will later be used in the limit state combinations to obtain the design values for the end bent piles.

UNFACTORED LIVE LOAD (axial) AT END BENT			
	LL Loads (kip)		
Beam	x	y	z
1	0.0	0.0	0.0
2	0.0	-51.5	0.0
3	0.0	-111.7	0.0
4	0.0	-87.9	0.0
5	0.0	-15.1	0.0
6	0.0	0.0	0.0
7	0.0	0.0	0.0
8	0.0	0.0	0.0
9	0.0	0.0	0.0
10	0.0	0.0	0.0
11	0.0	0.0	0.0

Defined Units

End Bent Design Loads

Reference

Reference:F:\HDRDesignExamples\Ex1_PCBeam\311EndBentLLs.mcd(R)

Description

This section provides the design parameters necessary for the for the substructure end bent design. The loads calculated in this file are only from the superstructure. Substructure self-weight, wind on substructure and uniform temperature on substructure can be generated by the substructure analysis model/program chosen by the user.

For this design example, Larsa 2000 was chosen as the analysis model/program (http://www.larsausa.com)

Page Contents

Page	Contents
310	**A. General Criteria**
	A1. Bearing Design Movement/Strain
	A2. End Bent Dead Load Summary
	A3. End Bent Live Load Summary
312	**B. Lateral Load Analysis**
	B1. Center of Movement
	B2. Braking Force: BR [LRFD 3.6.4]
	B3. Temperature, Creep and Shrinkage Forces
	B4. Wind Pressure on Structure: WS
	B5. Wind Pressure on Vehicles [LRFD 3.8.1.3]
322	**C. Design Limit States**
	C1. Strength I Limit State
	C2. Strength III Limit State
	C3. Service I Limit State

A. General Criteria

A1. Bearing Design Movement/Strain

Strain due to temperature, creep and shrinkage..... $\varepsilon_{CST} = 0.00047$ *(**Note**: See Sect. 2.10.B4 - Bearing Design Movement/Strain)*

A2. End Bent Dead Load Summary

Unfactored beam reactions at the end bent for DC and DW loads

UNFACTORED BEAM REACTIONS AT END BENTS						
	DC Loads (kip)			DW Loads (kip)		
Beam	x	y	z	x	y	z
1	0.0	-91.8	0.0	0.0	-5.4	0.0
2	0.0	-87.1	0.0	0.0	-4.7	0.0
3	0.0	-87.1	0.0	0.0	-4.7	0.0
4	0.0	-87.1	0.0	0.0	-4.7	0.0
5	0.0	-87.1	0.0	0.0	-4.7	0.0
6	0.0	-87.1	0.0	0.0	-4.7	0.0
7	0.0	-87.1	0.0	0.0	-4.7	0.0
8	0.0	-87.1	0.0	0.0	-4.7	0.0
9	0.0	-87.1	0.0	0.0	-4.7	0.0
10	0.0	-87.1	0.0	0.0	-4.7	0.0
11	0.0	-91.8	0.0	0.0	-5.4	0.0

A2. End Bent Live Load Summary

Unfactored beam reactions at the pier for LL loads corresponding to maximum axial force

UNFACTORED LIVE LOAD (axial) AT END BENT			
	LL Loads (kip)		
Beam	x	y	z
1	0.0	0.0	0.0
2	0.0	-51.5	0.0
3	0.0	-111.7	0.0
4	0.0	-87.9	0.0
5	0.0	-15.1	0.0
6	0.0	0.0	0.0
7	0.0	0.0	0.0
8	0.0	0.0	0.0
9	0.0	0.0	0.0
10	0.0	0.0	0.0
11	0.0	0.0	0.0

A4. Center of Movement

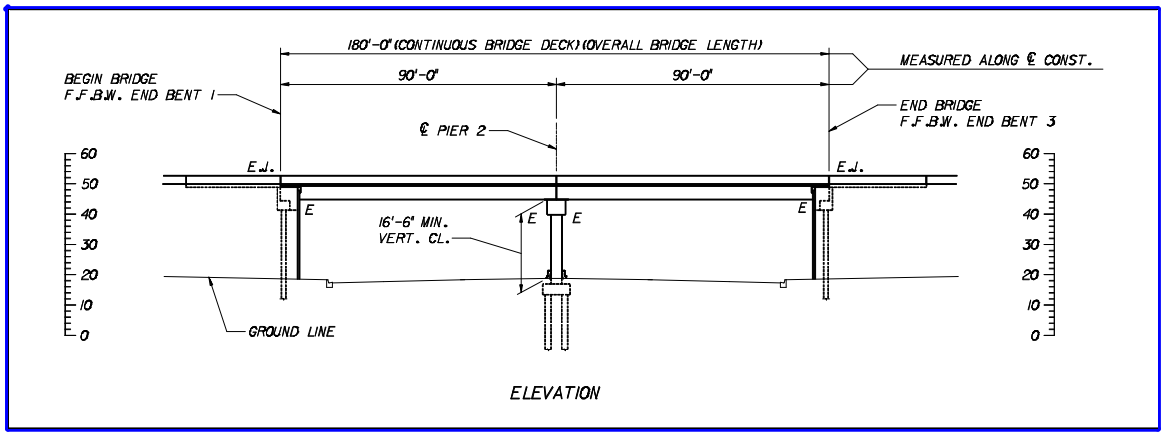

By inspection, the center of movement will be the intermediate pier.

$$L_0 := L_{span}$$

$$L_0 = 90.0\,\text{ft}$$

B. Lateral Load Analysis

B1. Centrifugal Force: CE [LRFD 3.6.3]

LRFD 4.6.1.2.1 states that effects of curvature may be neglected on open cross-sections whose radius is such that the central angle subtended by each span is less than:

Number of Beams	Angle for One Span	Angle for Two or More Spans
2	2 °	3 °
3 or 4	3 °	4 °
5 or more	4 °	5 °

Horizontal curve data..... $R := 3800 \cdot ft$

Angle due to one span..... $\theta_{1span} := \frac{L_{span}}{R}$

$\theta_{1span} = 1.4\ deg$

Angle due to all spans..... $\theta_{2span} := \frac{L_{bridge}}{R}$

$\theta_{2span} = 2.7\ deg$

Since the number of beams is greater than 5 and the angles are within LRFD requirements, the bridge can be analyzed as a straight structure and therefore, centrifigal force effects are not necessary.

B2. Braking Force: BR [LRFD 3.6.4]

The braking force should be taken as the greater of:

25% of axle weight for design truck / tandem

5% of design truck / tandem and lane

The number of lanes for braking force calculations depends on future expectations of the bridge. For this example, the bridge is not expected to become one-directional in the future, and future widening is expected to occur to the outside. From this information, the number of lanes is

$N_{lanes} = 3$

The multiple presence factor (LRFD Table 3.6.1.1.2-1) should be taken into account..

$$MPF := \begin{cases} 1.2 & \text{if } N_{lanes} = 1 \\ 1.0 & \text{if } N_{lanes} = 2 \\ 0.85 & \text{if } N_{lanes} = 3 \\ 0.65 & \text{otherwise} \end{cases}$$

$MPF = 0.85$

Braking force as 25% of axle weight for design truck / tandem..... $BR_{Force.1} := 25\% \cdot (72 \cdot kip) \cdot N_{lanes} \cdot MPF$

$BR_{Force.1} = 45.9\ kip$

Braking force as 5% of axle weight for design truck / tandem and lane..... $BR_{Force.2} := 5\% \cdot (72 \cdot kip + w_{lane} \cdot L_{span}) \cdot N_{lanes} \cdot MPF$

$BR_{Force.2} = 16.5\,kip$

Governing braking force..... $BR_{Force} := \max(BR_{Force.1}, BR_{Force.2})$

$BR_{Force} = 45.9\,kip$

Distribution of Braking Forces to End Bent

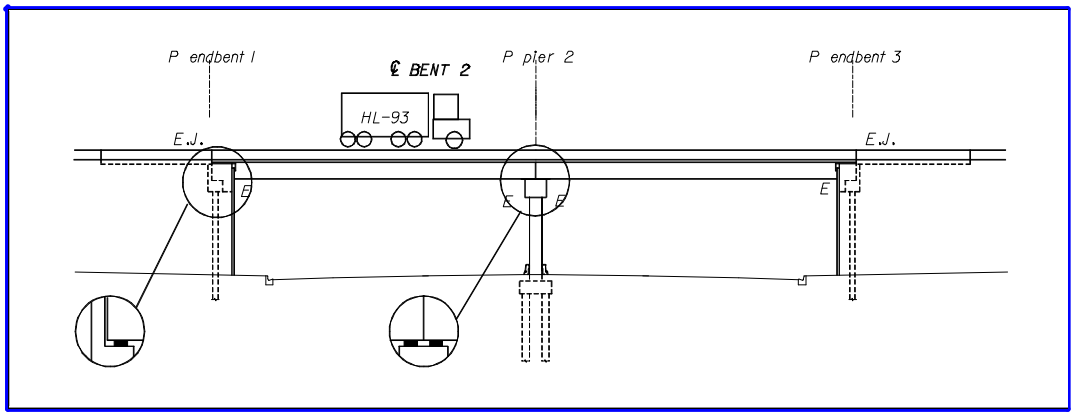

The same bearing pads are provided at the pier and end bent to distribute the braking forces. The braking force transferred to the pier or end bents is a function of the bearing pad and pier column stiffnesses. For this example, (1) the pier column stiffnesses are ignored, (2) the deck is continuous over pier 2 and expansion joints are provided only at the end bents.

Braking force at End Bent..... $BR_{Endbent} = BR_{Force} \cdot (K_{Endbent})$

where..... $K_{Endbent} = \dfrac{N_{pads.endbent} \cdot K_{pad}}{\sum (N_{pads.pier} + N_{pads.endbent}) \cdot K_{pad}}$

Simplifying and using variables defined in this example,

pier stiffness can be calculated as..... $K_{Endbent} := \dfrac{N_{beams}}{(1 + 2 + 1) \cdot N_{beams}}$

$K_{Endbent} = 0.25$

corresponding braking force..... $BR_{Endbent} := BR_{Force} \cdot (K_{Endbent})$

$BR_{Endbent} = 11.5\,kip$

Since the bridge superstructure is very stiff in the longitudinal direction, the braking forces are assumed to be equally distributed to the beams under the respective roadway.

$beams := 6$

Braking force at end bent per beam..... $BR_{Endbent} := \dfrac{BR_{Endbent}}{beams}$

$BR_{Endbent} = 1.9\,kip$

Adjustments for Skew

The braking force is transferred to the pier by the bearing pads. The braking forces need to be resolved along the axis of the bearing pads for design of the pier substructure.

Braking force perpendicular (z-direction) to the skew..... $BR_{z.Endbent} := BR_{Endbent} \cdot \cos(Skew)$

$BR_{z.Endbent} = 1.7\ kip$

Braking force parallel (x-direction) to the skew..... $BR_{x.Endbent} := BR_{Endbent} \cdot \sin(Skew)$

$BR_{x.Endbent} = -1.0\ kip$

Adjustments for Braking Force Loads Applied 6' above Deck

The longitudinal moment induced by braking forces over a pier is resisted by the moment arm. Conservatively, assume the braking occurs over one span only, then the result is an uplift reaction on the downstation end bent or pier and a downward reaction at the upstation end bent or pier. In this example, the braking is assumed to occur in span 1 and the eccentricity of the downward load with the bearing and centerline of pier eccentricities is ignored.

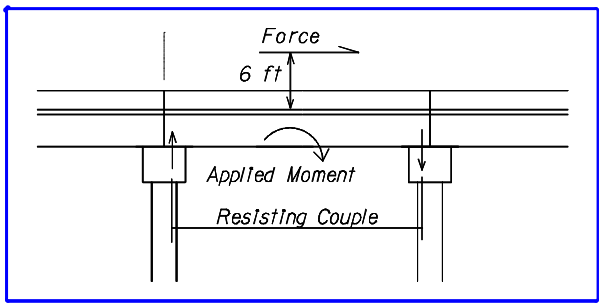

Moment arm from top of bearing pad to location of applied load..... $M_{arm} := 6ft + h$

$M_{arm} = 11.250\ ft$

Braking force in end bent (y-direction), vertical..... $BR_{y.Endbent} := \dfrac{-BR_{Endbent} \cdot M_{arm}}{L_{span}}$

$BR_{y.Endbent} = -0.2\ kip$

Only the downward component of this force is considered. Typically, the vertical forces (uplift) are small and can be ignored.

BRAKING FORCES AT END BENT			
	BR Loads (kip)		
Beam	x	y	z
1	-1.0	-0.2	1.7
2	-1.0	-0.2	1.7
3	-1.0	-0.2	1.7
4	-1.0	-0.2	1.7
5	-1.0	-0.2	1.7
6	-1.0	0.0	0.0
7	0.0	0.0	0.0
8	0.0	0.0	0.0
9	0.0	0.0	0.0
10	0.0	0.0	0.0
11	0.0	0.0	0.0

B3. Creep, Shrinkage, and Temperature Forces

The forces transferred from the superstructure to the substructure due to temperature, creep, and shrinkage are influenced by the shear displacements in the bearing pad. In this example, only temperature and shrinkage effects are considered. Creep is ignored, since this example assumes the beams will creep towards their center and the composite deck will offer some restraint.

$\varepsilon_{CST} = 0.00047$

Displacements at top of end bent due to temperature, creep, and shrinkage.....

$\Delta_{Endbent1} := \left(L_0 - x_{dist_0}\right) \cdot \varepsilon_{CST}$

$\Delta_{Endbent1} = 0.5\ in$

Shear force transferred through each bearing pad due to creep, shrinkage, and temperature.....

$CST_{Endbent} := \dfrac{G_{max} \cdot A_{pad} \cdot \Delta_{Endbent1}}{h_{rt}}$

$CST_{Endbent} = 10.50\ kip$

This force needs to be resolved along the direction of the skew

Shear force perpendicular (z-direction) to the end bent per beam.....

$CST_{z.Endbent} := CST_{Endbent} \cdot \cos(Skew)$

$CST_{z.Endbent} = 9.09\ kip$

Shear force parallel (x-direction) to the end bent per beam.....

$CST_{x.Endbent} := CST_{Endbent} \cdot \sin(Skew)$

$CST_{x.Endbent} = -5.25\ kip$

Summary of beam reactions at the end bent due to creep, shrinkage, and temperature

CREEP, SHRINKAGE, TEMPERATURE FORCES AT END BENT			
	CR, SH, TU Loads (kip)		
Beam	x	y	z
1	-5.3	0.0	9.1
2	-5.3	0.0	9.1
3	-5.3	0.0	9.1
4	-5.3	0.0	9.1
5	-5.3	0.0	9.1
6	-5.3	0.0	9.1
7	-5.3	0.0	9.1
8	-5.3	0.0	9.1
9	-5.3	0.0	9.1
10	-5.3	0.0	9.1
11	-5.3	0.0	9.1

B4. Wind Pressure on Structure: WS

The wind loads are applied to the superstructure and substructure.

Loads from Superstructure [LRFD 3.8.1.2.2]

The wind pressure on the superstructure consists of lateral (x-direction) and longitudinal (z-direction) components.

For prestressed beam bridges, the following wind pressures are given in the LRFD.....

$$Wind_{skew} := \begin{pmatrix} 0 \\ 15 \\ 30 \\ 45 \\ 60 \end{pmatrix} \qquad Wind_{LRFD} := \begin{array}{c} \begin{array}{cc} \underline{x} & \underline{z} \end{array} \\ \begin{pmatrix} .050 & .000 \\ .044 & .006 \\ .041 & .012 \\ .033 & .016 \\ .017 & .019 \end{pmatrix} \end{array} \cdot ksf$$

The wind pressures in LRFD should be increased by 20% for bridges located in Palm Beach, Broward, Dade, and Monroe counties (LRFD 2.4.1). For bridges over 75 feet high or with unusual structural features, the wind pressures must be submitted to FDOT for approval.

This example assumes a South Florida location, so the 20% factor applies.....

$$Wind_{FDOT} := \gamma_{FDOT} \cdot Wind_{LRFD}$$

$$Wind_{FDOT} = \begin{array}{c} \begin{array}{cc} \underline{x} & \underline{z} \end{array} \\ \begin{pmatrix} 0.060 & 0.000 \\ 0.053 & 0.007 \\ 0.049 & 0.014 \\ 0.040 & 0.019 \\ 0.020 & 0.023 \end{pmatrix} \end{array} ksf$$

Composite section height.....

$h = 5.25\,ft$

Superstructure Height.....

$h_{Super} := h + 2.1667 \cdot ft$

Height above ground that the wind pressure is applied.....

$Z_1 := (h_{Col} - h_{Surcharge}) + h_{EB} + h_{Super}$

$Z_1 = 21.92\,ft$

The exposed superstructure area influences the wind forces that are transferred to the supporting substructure. Tributary areas are used to determine the exposed superstructure area.

Exposed superstructure area at end bent...

$A_{Super} := \frac{L_{span}}{2} \cdot h_{Super}$

$A_{Super} = 333.8\,ft^2$

Forces due to wind applied to the superstructure.....

$WS_{Super.Endbent} := Wind_{FDOT} \cdot A_{Super}$

$$WS_{Super.Endbent} = \begin{array}{c} \begin{array}{cc} \underline{x} & \underline{z} \end{array} \\ \begin{pmatrix} 20.0 & 0.0 \\ 17.6 & 2.4 \\ 16.4 & 4.8 \\ 13.2 & 6.4 \\ 6.8 & 7.6 \end{pmatrix} \end{array} kip$$

A conservative approach is taken to minimize the analysis required. The maximum transverse and longitudinal forces are used in the following calculations.

Maximum transverse force.....

$F_{WS.x} := WS_{Super.Endbent_{0,0}}$

$F_{WS.x} = 20\,kip$

Maximum longitudinal force.....

$F_{WS.z} := WS_{Super.Endbent_{4,1}}$

$F_{WS.z} = 7.6\,kip$

The forces due to wind need to be resolved along the direction of the skew.

Force perpendicular (z-direction) to the end bent.....

$WS_{z.Endbent} := F_{WS.z} \cdot \cos(Skew) - F_{WS.x} \cdot \sin(Skew)$

$WS_{z.Endbent} = 16.6\,kip$

Force parallel (x-direction) to the end bent $WS_{x.Endbent} := F_{WS.z} \cdot \sin(Skew) + F_{WS.x} \cdot \cos(Skew)$

$WS_{x.Endbent} = 13.5\,kip$

The force due to wind acts on the full superstructure. This force needs to be resolved into the reactions in each beam. The following table summarizes the beam reactions due to wind.

WIND ON STRUCTURE FORCES AT END BENT

Beam	WS Loads (kip) x	y	z
1	1.2	0.0	1.5
2	1.2	0.0	1.5
3	1.2	0.0	1.5
4	1.2	0.0	1.5
5	1.2	0.0	1.5
6	1.2	0.0	1.5
7	1.2	0.0	1.5
8	1.2	0.0	1.5
9	1.2	0.0	1.5
10	1.2	0.0	1.5
11	1.2	0.0	1.5

Loads from Substructure [LRFD 3.8.1.2.3]

Wind pressure applied directly to the substructure..... $Wind_{LRFD} := 0.04 \cdot ksf$

The wind pressures in LRFD should be increased by 20% for bridges located in Palm Beach, Broward, Dade, and Monroe counties [**LRFD 2.4.1**].

This example assumes a South Florida location, so the 20% factor applies..... $Wind_{FDOT} := \gamma_{FDOT} \cdot Wind_{LRFD}$

$Wind_{FDOT} = 0.048\,ksf$

General equation for wind forces applied to the substructure.....

$$WS_{Force} = (Wind_{Pressure}) \cdot (Exposed\ Area_{Substructure}) \cdot (Skew_{Adjustment})$$

The end bents are usually shielded from wind by a MSE wall or an embankment fill, so wind on the end bent substructure is **ignored**.

B5. Wind Pressure on Vehicles [LRFD 3.8.1.3]

The LRFD specifies that wind load should be applied to vehicles on the bridge.....

$$Skew_{wind} := \begin{pmatrix} 0 \\ 15 \\ 30 \\ 45 \\ 60 \end{pmatrix} \qquad Wind_{LRFD} := \begin{pmatrix} .100 & 0 \\ .088 & .012 \\ .082 & .024 \\ .066 & .032 \\ .034 & .038 \end{pmatrix} \cdot \frac{kip}{ft}$$

The wind pressures in LRFD should be increased by 20% for bridges located in Palm Beach, Broward, Dade, and Monroe counties (LRFD 2.4.1).

This example assumes a South Florida location, so the 20% factor applies.....

$$Wind_{FDOT} := 1.20 \cdot Wind_{LRFD}$$

$$Wind_{FDOT} = \begin{array}{c} \begin{array}{cc} \underline{x} & \underline{z} \end{array} \\ \begin{pmatrix} 0.120 & 0.000 \\ 0.106 & 0.014 \\ 0.098 & 0.029 \\ 0.079 & 0.038 \\ 0.041 & 0.046 \end{pmatrix} \end{array} \frac{kip}{ft}$$

Height above ground for wind pressure on vehicles.....

$$Z_2 := (Z_1 - 2.1667 \cdot ft) + 6ft$$

$$Z_2 = 25.75\,ft$$

The wind forces on vehicles are transmitted to the end bent using tributary lengths.....

$$L_{Endbent} := \frac{L_{span}}{2}$$

$$L_{Endbent} = 45\,ft$$

Forces due to wind on vehicles applied to the superstructure.....

$$WL_{Super.Endbent} := Wind_{FDOT} \cdot L_{Endbent}$$

$$WL_{Super.Endbent} = \begin{array}{c} \begin{array}{cc} \underline{x} & \underline{z} \end{array} \\ \begin{pmatrix} 5.4 & 0.0 \\ 4.8 & 0.6 \\ 4.4 & 1.3 \\ 3.6 & 1.7 \\ 1.8 & 2.1 \end{pmatrix} \end{array} kip$$

A conservative approach is taken to minimize the analysis required. The maximum transverse and longitudinal forces are used in the following calculations.

Maximum transverse force..... $F_{WL.x} := WL_{Super.Endbent_{0,0}}$

$F_{WL.x} = 5.4\,kip$

Maximum longitudinal force..... $F_{WL.z} := WL_{Super.Endbent_{4,1}}$

$F_{WL.z} = 2.1\,kip$

The forces due to wind need to be resolved along the direction of the skew.

Force perpendicular (z-direction) to the endbent..... $WL_{z.Endbent} := F_{WL.z} \cdot \cos(Skew) - F_{WL.x} \cdot \sin(Skew)$

$WL_{z.Endbent} = 4.48\,kip$

Force perpendicular (z-direction) to the endbent per beam..... $WL_{z.Beam} := \dfrac{WL_{z.Endbent}}{N_{beams}}$

$WL_{z.Beam} = 0.41\,kip$

Force parallel (x-direction) to the cap..... $WL_{x.Endbent} := F_{WL.z} \cdot \sin(Skew) + F_{WL.x} \cdot \cos(Skew)$

$WL_{x.Endbent} = 3.65\,kip$

Force parallel (x-direction) to the cap per beam..... $WL_{x.Beam} := \dfrac{WL_{x.Endbent}}{N_{beams}}$

$WL_{x.Beam} = 0.33\,kip$

Longitudinal Adjustments for Wind on Vehicles

The longitudinal moment is resisted by the moment arm.

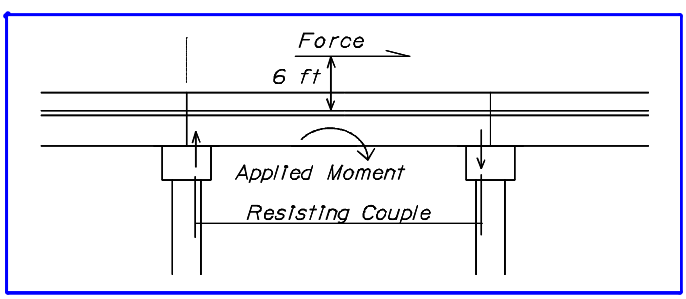

Moment arm from top of bearing pad to location of applied load..... $M_{arm} = 11.250\,ft$ $(M_{arm} = h + 6\,ft)$

Vertical force in end bent due to wind pressure on vehicle..... $WL_{y.Endbent} := \dfrac{-WL_{z.Endbent} \cdot M_{arm}}{L_{span}}$

$WL_{y.Endbent} = -0.56\,kip$

For this design example, this component of the load is **ignored**.

Transverse Adjustments for Wind on Vehicles

Using the principles of the lever rule for transverse distribution of live load on beams, the wind on live can be distributed similarly. It assumes that the wind acting on the live load will cause the vehicle to tilt over. Using the lever rule, the tilting effect of the vehicle is resisted by up and down reactions on the beams assuming the deck to act as a simple span between beams. Conservatively, assume all beams that can see live load can develop this load since the placement of the vehicle(s) and number of vehicles within the deck is constantly changing.

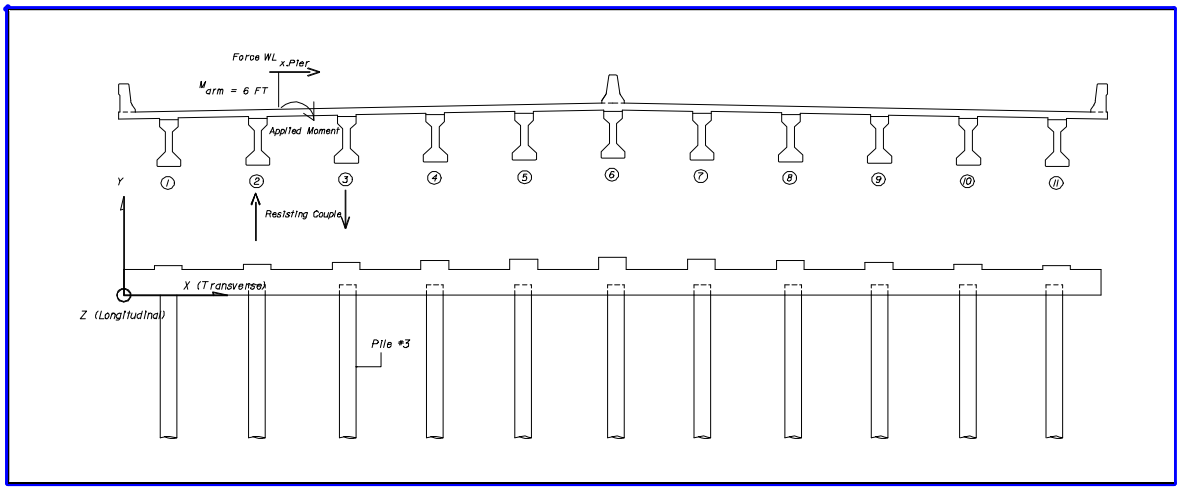

Moment arm from top of bearing pad to location of applied load.....

$$M_{arm} = 11.250\,\text{ft}$$

Vertical reaction on pier from transverse wind pressure on vehicles.....

$$WL_{y.Endbent} := \frac{-WL_{x.Endbent} \cdot M_{arm}}{BeamSpacing}$$

$$WL_{y.Endbent} = -5.13\,\text{kip}$$

Since this load can occur at any beam location, apply this load to all beams

WIND ON LIVE LOAD FORCES AT END BENT			
	WL Loads (kip)		
Beam	x	y	z
1	0.3	0.0	0.4
2	0.3	5.1	0.4
3	0.3	-5.1	0.4
4	0.3	0.0	0.4
5	0.3	0.0	0.4
6	0.3	0.0	0.4
7	0.3	0.0	0.4
8	0.3	0.0	0.4
9	0.3	0.0	0.4
10	0.3	0.0	0.4
11	0.3	0.0	0.4

C. Design Limit States

The design loads for strength I, strength III, strength V, and service I limit states are summarized in this section.

These reactions are from the superstructure **only**, acting on the substructure. In the analysis model, such as a GTStrudl, Sap2000, Strudl, Larsa 2000, etc, include the following loads:

- DC: self-weight of the substructure, include end bent cap and backwall.
- TU: a temperature increase and fall on the pier substructure utilizing the following parameters:

coefficient of expansion $\alpha_t = 6 \times 10^{-6} \frac{1}{°F}$

temperature change $temperature_{increase} = temperature_{fall} = 25 \cdot °F$

For instance, in LEAP's RCPier, two load cases would be required for temperature with a positive and negative strain being inputed, equal to: $\alpha_t \cdot (25 \cdot °F) = 0.00015$

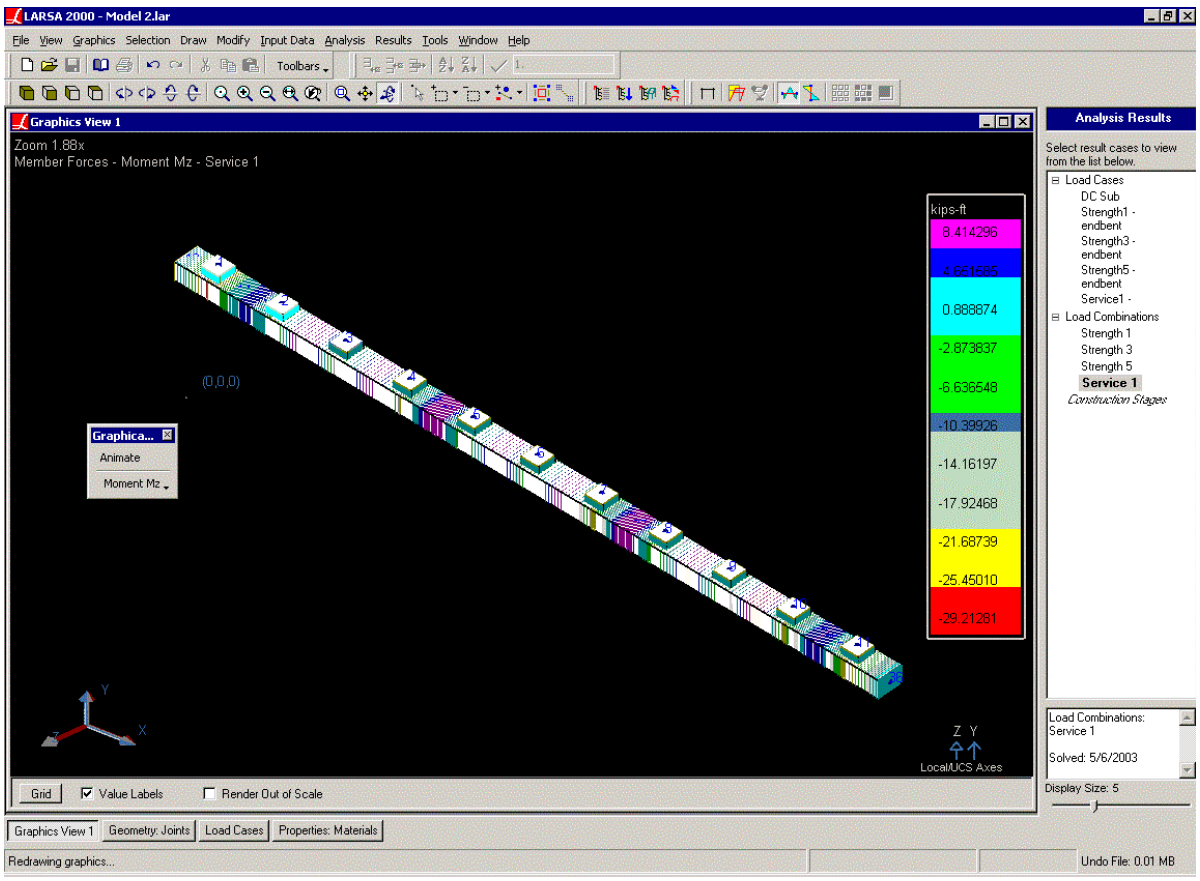

Note that in our model, the loads applied at the top of the cap from the beams are applied to rigid links that transfer the lateral loads as a lateral load and moment at the centroid of the end bent cap. This is consistent with substructure design programs like LEAP's RCPier. For the end bent, assuming the cap to be supported on pin supports at every pile location is an acceptable modeling decision.

- WS: Wind on the substructure should be applied directly to the analysis model. For the end bent surrounded by MSE wall, the wind loads on substructure are non-existant since the substructure can be considered shielded by the wall.

- All applied loads in the substructure analysis model should be multiplied by the appropriate load factor values and combined with the limit state loads calculated in this file for the final results.

C1. Strength I Limit State Loads

$$\text{Strength1} = 1.25 \cdot DC + 1.5 \cdot DW + 1.75 \cdot LL + 1.75BR + 0.5 \cdot (TU + CR + SH)$$

Strength I Limit State			
	Beam Loads (kip)		
Beam #	X	Y	Z
1	-4.3	-123.2	7.4
2	-4.3	-206.6	7.4
3	-4.3	-311.9	7.4
4	-4.3	-270.3	7.4
5	-4.3	-142.9	7.4
6	-4.3	-116.0	4.5
7	-2.6	-116.0	4.5
8	-2.6	-116.0	4.5
9	-2.6	-116.0	4.5
10	-2.6	-116.0	4.5
11	-2.6	-122.8	4.5

C2. Strength III Limit State Loads

$$\text{Strength3} = 1.25 \cdot DC + 1.5 \cdot DW + 1.4WS + 0.5 \cdot (TU + CR + SH)$$

Strength III Limit State			
	Loads (kip)		
Beam #	X	Y	Z
1	-0.9	-122.8	6.7
2	-0.9	-116.0	6.7
3	-0.9	-116.0	6.7
4	-0.9	-116.0	6.7
5	-0.9	-116.0	6.7
6	-0.9	-116.0	6.7
7	-0.9	-116.0	6.7
8	-0.9	-116.0	6.7
9	-0.9	-116.0	6.7
10	-0.9	-116.0	6.7
11	-0.9	-122.8	6.7

B3. Strength V Limit State

$$Strength5 = 1.25 \cdot DC + 1.50 \cdot DW + 1.35 \cdot LL + 1.35 \cdot BR + 0.40 \cdot WS + 1.0 \cdot WL + 0.50 \cdot (TU + CR + SH)$$

Strength V Limit State			
	Loads (kip)		
Beam #	X	Y	Z
1	-3.1	-123.1	7.8
2	-3.1	-180.7	7.8
3	-3.1	-272.3	7.8
4	-3.1	-235.0	7.8
5	-3.1	-136.7	7.8
6	-3.1	-116.0	5.6
7	-1.8	-116.0	5.6
8	-1.8	-116.0	5.6
9	-1.8	-116.0	5.6
10	-1.8	-116.0	5.6
11	-1.8	-122.8	5.6

C3. Service I Limit State Loads

$$Service1 = 1.0 \cdot DC + 1.0 \cdot DW + 1.0 \cdot LL + 1.0 \cdot BR + 0.3WS + 1.0 \cdot WL + 1.0 \cdot (TU + CR + SH)$$

Service I Limit State			
	Beam Loads (kip)		
Beam #	X	Y	Z
1	-5.5	-97.4	11.6
2	-5.5	-138.5	11.6
3	-5.5	-208.9	11.6
4	-5.5	-180.0	11.6
5	-5.5	-107.2	11.6
6	-5.5	-91.9	10.0
7	-4.5	-91.9	10.0
8	-4.5	-91.9	10.0
9	-4.5	-91.9	10.0
10	-4.5	-91.9	10.0
11	-4.5	-97.2	10.0

C4. Summary of Results

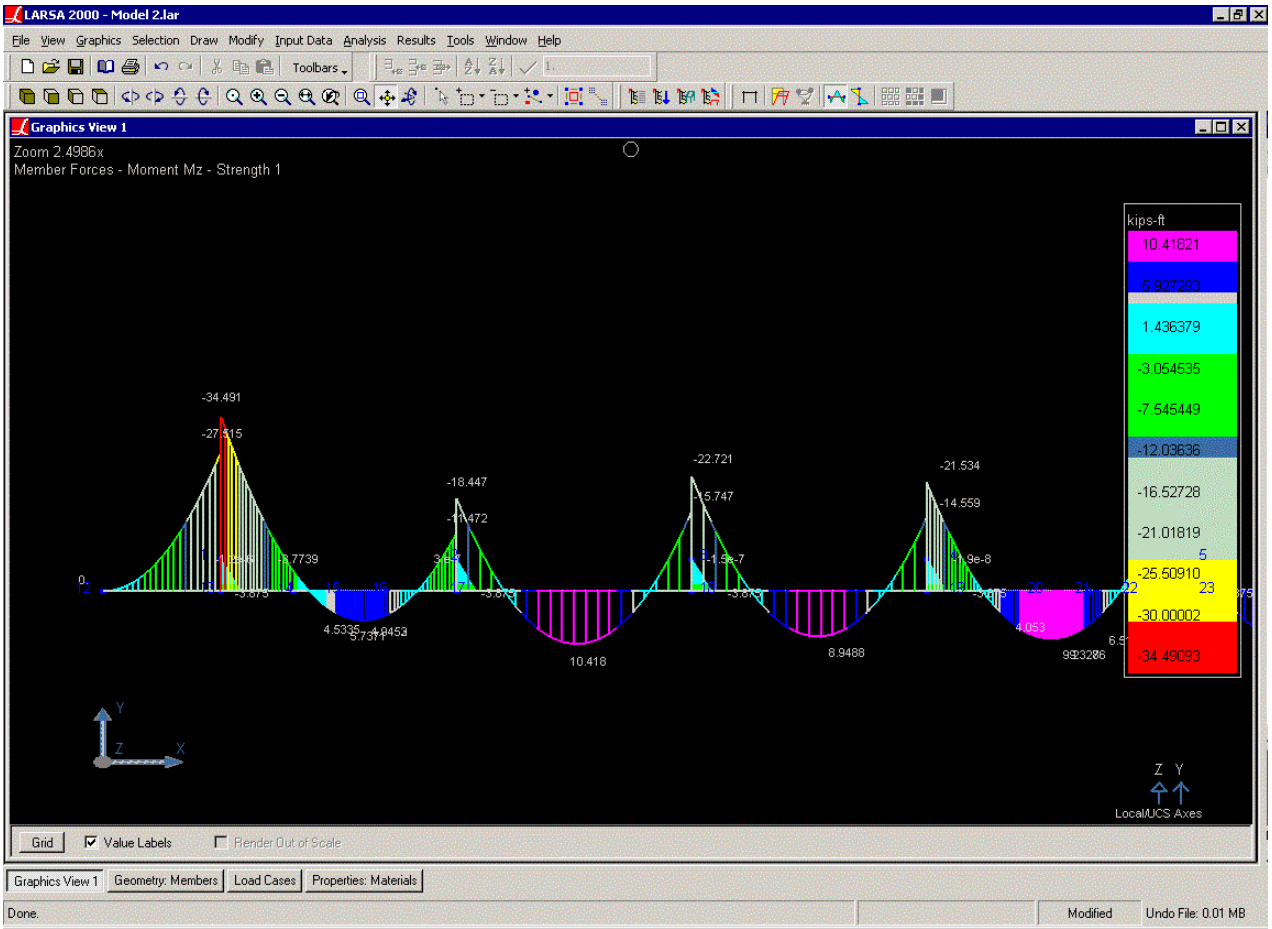

From the results of the analysis, the governing moments for the design of the end bent cap and the corresponding service moments were as follows:

$M_{Strength1.Negative} := -32.9 \cdot ft \cdot kip$ $\qquad$ $M_{Service1.Negative} := -28.9 \cdot ft \cdot kip$

$M_{Strength1.Positive} := 10.3 \cdot ft \cdot kip$ $\qquad$ $M_{Service1.Positive} := 8.4 \cdot ft \cdot kip$

The maximum pile reaction was pile #3, the governing loads were as follows:

$P_{Strength1} := 336.2 \cdot kip$ $\qquad$ $P_{Service1} := 228.4 \cdot kip$

For purposes of this design example, these values are given for references purposes. The method of obtaining the design values has been shown and the user will then utilize design equations and methodologies similar to Section 3.4 Pier Cap Design to design the end bent cap. For the piles, the approach is similar to Section 3.9 Pier Pile Vertical Load design. There are no moments transfered from the end bent cap to the piles since for a 1 foot embedment of the pile into the cap, the connection is considered to be a pin connection.

Defined Units

End Bent Cap Design

Reference

Description

The actual design of the end bent cap for the governing moments and shears has not been performed in this design example. For a similar design approach, refer to Section 3.4 Pier Cap Design.

End Bent Pile Vertical Load Design

Reference

Description

The actual design of the end bent piles for the vertical loads has not been performed in this design example. For a similar design approach, refer to **Section 3.9** Pier Pile Vertical Load Design.

End Bent Backwall Design

Reference

Reference:F:\HDRDesignExamples\Ex1_PCBeam\312EndBentLds.mcd(R)

Description

This section provides the design for the end bent backwall.

Page Contents

329 **A. General Criteria**

A1. End Bent Geometry

A2. Soil Parameters

331 **B. Back wall design**

B1. Tie-strap design

B2. Back wall design

343 **C. Summary of Reinforcement Provided**

A. General Criteria

A1. End Bent Design Parameters

Depth of end bent cap.....	$h_{EB} = 2.5\ ft$
Width of end bent cap.....	$b_{EB} = 3.5\ ft$
Length of end bent cap.....	$L_{EB} = 101.614\ ft$
Height of back wall.....	$h_{BW} = 5\ ft$
Backwall design width.....	$L_{BW} = 1\ ft$
Thickness of back wall.....	$t_{BW} = 1\ ft$
Approach slab thickness.....	$t_{ApprSlab} = 13.5\ in$
Approach slab length.....	$L_{ApprSlab} = 34.75\ ft$
Concrete cover.....	$cover_{sub} = 3\ in$
Resistance Factor for flexure and tension.....	$\phi = 0.9$
Resistance Factor for shear and torsion.....	$\phi_v = 0.9$
Load factor for EH and ES (**LRFD 3.4.1**).....	$\gamma_p := 1.5$
Load factor for dead load.....	$\gamma_{DC} := 1.25$

A2. Soil Parameters

Values for the active lateral earth pressure, k_a, [**LRFD 3.11.5.3, 3.11.5.6]** may be taken as:

$$k_a = \frac{\sin^2(\theta + \phi'_f)}{\Gamma \cdot \left(\sin^2\theta \cdot \sin(\theta - \delta)\right)}$$

where

$$\Gamma = \left(1 + \sqrt{\frac{\sin(\phi'_f + \delta) \cdot \sin(\phi'_f - \beta)}{\sin(\theta - \delta)\sin(\theta + \beta)}}\right)^2$$

Table 3.11.5.3-1 - Friction Angle for Dissimilar Materials (U.S. Department of the Navy, 1982a)

Interface Materials	Friction Angle, δ (DEG)	Coefficient of Friction, Tan δ (DIM)
Mass concrete on the following foundation materials:		
• Clean sound rock	35	0.70
• Clean gravel, gravel-sand mixtures, coarse sand	29 to 31	0.55 to 0.60
• Clean fine to medium sand, silty medium to coarse sand, silty or clayey gravel	24 to 29	0.45 to 0.55
• Clean fine sand, silty or clayey fine to medium sand	19 to 24	0.34 to 0.45
• Fine sandy silt, nonplastic silt	17 to 19	0.31 to 0.34
• Very stiff and hard residual or preconsolidated clay	22 to 26	0.40 to 0.49
• Medium stiff and stiff clay and silty clay	17 to 19	0.31 to 0.34
Masonry on foundation materials has same friction factors		

defining the following:

$\gamma_{soil} = 115\,pcf$ Unit weight of soil

$\theta := 90 \cdot deg$ angle of the end bent back face of the wall to the horizontal

$\phi'_f := 29 \cdot deg$ effective angle of internal friction as per **LRFD Table 3.11.5.3-1**

$\delta := 29 \cdot deg$ friction angle between fill and wall given by **LRFD Table 3.11.5.3-1** *(**Note**: based on concrete on clean fine to medium sand)*

$\beta := 0 \cdot deg$ angle of fill to the horizontal

therefore

$$\Gamma := \left(1 + \sqrt{\frac{\sin(\phi'_f + \delta) \cdot \sin(\phi'_f - \beta)}{\sin(\theta - \delta)\sin(\theta + \beta)}}\right)^2$$

$$\Gamma = 2.841$$

and

$$k_a := \frac{\sin\left[\left(\theta + \phi'_f\right)^2\right]}{\Gamma \cdot \left(\sin(\theta)^2 \cdot \sin(\theta - \delta)\right)}$$

$$k_a = -0.371$$

The horizontal earth pressure due to live load, Δ_p, **[LRFD 3.11.6.4]** may be approximated as follows:

$$\Delta_p = k \cdot \gamma_{soil} \cdot h_{eq}$$ where

$\gamma_{soil} = 115\,pcf$ Unit weight of soil

$k := |k_a|$ Coefficient of lateral earth pressure

$h_{eq} := 4.0 \cdot ft$ equivalent height of soil for vehicular loading, **LRFD Table 3.11.6.4-1 or 3.11.6.4-2**

therefore

$$\Delta_p := k \cdot \gamma_{soil} \cdot h_{eq}$$

$$\Delta_p = 0.171\,ksf$$

B. Back wall design

B1. Tie-strap design

The following is a free body diagram of the loads acting on the end bent and the proposed resisting moment. The resisting moment, for this design example, is accomplished by specifying tie-back straps attached to the backwall which are the same that are used in the MSE walls. Generally, the factored and unfactored forces per linear foot of wall that the straps need to widthstand are specified.

Loads

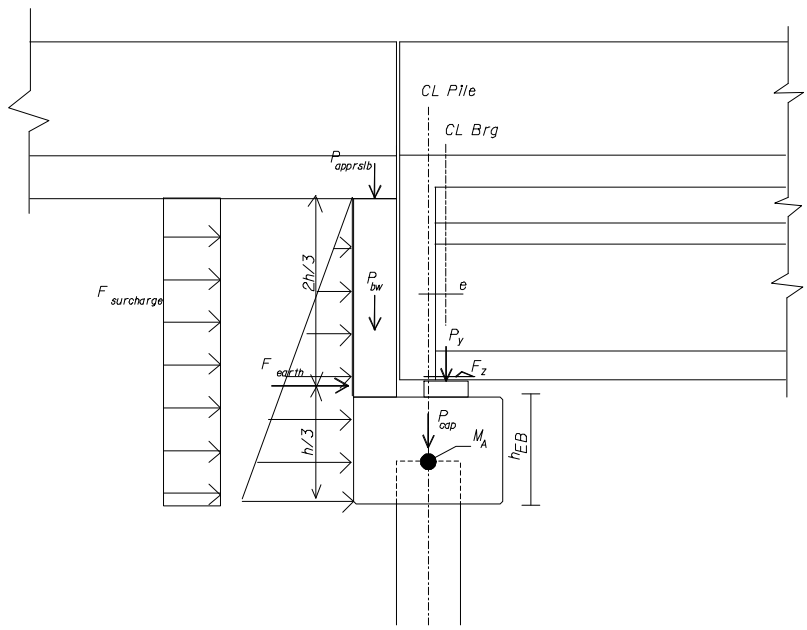

Loads acting on End Bent

Calculate moment at top of pile due to earth pressure per foot of backwall

Lateral force.....

$$F_{earth} := \frac{|k_a| \cdot \gamma_{soil} \cdot (h_{BW} + h_{EB})^2}{2}$$

$$F_{earth} = 1.20 \frac{kip}{ft}$$

Lateral force moment arm.....

$$y_{earth} := \frac{h_{BW} + h_{EB}}{3} - Pile_{embed}$$

$$y_{earth} = 1.50\,ft$$

Moment at top of pile.....

$$M_{earth} := F_{earth} \cdot y_{earth}$$

$$M_{earth} = 1.80 \frac{kip \cdot ft}{ft}$$

Calculate moment at top of pile due to live load surcharge per foot of backwall

Lateral force..... $F_{surcharge} := \left[\Delta_p \cdot \left(h_{BW} + h_{EB}\right)\right]$

$F_{surcharge} = 1.28 \frac{kip}{ft}$

Lateral force moment arm..... $y_{surcharge} := \frac{h_{BW} + h_{EB}}{2} - Pile_{embed}$

$y_{surcharge} = 2.75\,ft$

Moment at top of pile..... $M_{surcharge} := F_{surcharge} \cdot y_{surcharge}$

$M_{surcharge} = 3.52 \frac{kip \cdot ft}{ft}$

Calculate moment at top of pile due to approach slab per foot of backwall

Vertical force..... $P_{AS} := \left(\gamma_{conc} \cdot \frac{t_{ApprSlab} \cdot L_{ApprSlab}}{3}\right)$

*(**Note**: assume 1/3 of weight is seen at back wall)*

$P_{AS} = 1.95 \frac{kip}{ft}$

Vertical force moment arm..... $e_{AS} := \frac{t_{BW} - b_{EB}}{2}$

$e_{AS} = -1.25\,ft$

Moment at top of pile..... $M_{AS} := P_{AS} \cdot e_{AS}$

$M_{AS} = -2.44 \frac{kip \cdot ft}{ft}$

Calculate moment at top of pile due to back wall per foot of backwall

Vertical force..... $P_{BW} := \left(\gamma_{conc} \cdot h_{BW} \cdot t_{BW}\right)$

$P_{BW} = 0.75 \frac{kip}{ft}$

Vertical force moment arm..... $e_{BW} := e_{AS}$

$e_{BW} = -1.25\,ft$

Moment at top of pile..... $M_{BW} := P_{BW} \cdot e_{BW}$

$M_{BW} = -0.94 \frac{kip \cdot ft}{ft}$

Calculate moment at top of pile due to end bent cap per foot of backwall

Vertical force..... $P_{Cap} := \left(\gamma_{conc} \cdot h_{EB} \cdot b_{EB}\right)$

$P_{Cap} = 1.31 \frac{kip}{ft}$

Vertical force moment arm..... $e_{Cap} := 0 \cdot ft$

$e_{Cap} = 0.00\,ft$

Moment at top of pile..... $M_{Cap} := P_{Cap} \cdot e_{Cap}$

$M_{Cap} = 0.00 \frac{kip \cdot ft}{ft}$

Calculate moment at top of pile due to maximum Strength I limit state reaction (pile #3) per foot of backwall. To get an equivalent load per foot of backwall, the beam reaction is divided by the beam spacing.

Strength

Vertical force.....

$P_{Str1} := -311.9 \cdot kip \cdot \left(\frac{1}{BeamSpacing}\right)$

$P_{Str1} = -38.99 \frac{kip}{ft}$

Vertical force moment arm.....

$e_{Py} := \frac{b_{EB}}{2} - t_{BW} - K$

$e_{Py} = -0.17\,ft$

Moment at top of pile.....

$M_{P.Str1} := P_{Str1} \cdot e_{Py}$

$M_{P.Str1} = 6.50 \frac{kip \cdot ft}{ft}$

Strength I Limit State			
	Beam Loads (kip)		
Beam #	X	Y	Z
1	-4.3	-123.2	7.4
2	-4.3	-206.6	7.4
3	-4.3	-311.9	7.4
4	-4.3	-270.3	7.4
5	-4.3	-142.9	7.4
6	-4.3	-116.0	4.5
7	-2.6	-116.0	4.5
8	-2.6	-116.0	4.5
9	-2.6	-116.0	4.5
10	-2.6	-116.0	4.5
11	-2.6	-122.8	4.5

Lateral force.....

$F_{Str1} := 7.4 \cdot kip \cdot \left(\frac{1}{BeamSpacing}\right)$

$F_{Str1} = 0.93 \frac{kip}{ft}$

Vertical force moment arm.....

$e_{Fy} := h_{EB} - Pile_{embed} + 4 \cdot in$ *(**Note**: Use 4" pedestal height).*

$e_{Fy} = 1.83\,ft$

Moment at top of pile.....

$M_{F.Str1} := F_{Str1} \cdot e_{Fy}$

$M_{F.Str1} = 1.70 \frac{kip \cdot ft}{ft}$

Service

Vertical force.....

$P_{Srv1} := -208.9 \cdot kip \cdot \left(\frac{1}{BeamSpacing}\right)$

$P_{Srv1} = -26.11 \frac{kip}{ft}$

Vertical force moment arm

$e_{Py} = -0.17\,ft$

Moment at top of pile.....

$M_{P.Srv1} := P_{Srv1} \cdot e_{Py}$

$M_{P.Srv1} = 4.35 \frac{kip \cdot ft}{ft}$

Service I Limit State			
	Beam Loads (kip)		
Beam #	X	Y	Z
1	-5.5	-97.4	11.6
2	-5.5	-138.5	11.6
3	-5.5	-208.9	11.6
4	-5.5	-180.0	11.6
5	-5.5	-107.2	11.6
6	-5.5	-91.9	10.0
7	-4.5	-91.9	10.0
8	-4.5	-91.9	10.0
9	-4.5	-91.9	10.0
10	-4.5	-91.9	10.0
11	-4.5	-97.2	10.0

Lateral force.....

$F_{Srv1} := 11.6 \cdot kip \cdot \left(\frac{1}{BeamSpacing}\right)$

$F_{Srv1} = 1.45 \frac{kip}{ft}$

Vertical force moment arm.....

$e_{Fy} = 1.83\,ft$

Moment at top of pile.....

$M_{F.Srv1} := F_{Srv1} \cdot e_{Fy}$

$M_{F.Srv1} = 2.66 \frac{kip \cdot ft}{ft}$

Resisting Moments

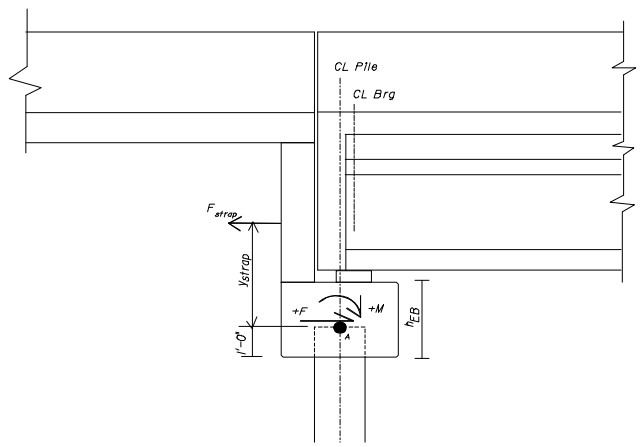

+M – Tie Backs resisting moment

*(**Note**: Jacking loads which can cause a resultant moment M_A in the opposite direction were not considered in this design example)*

Calculate the Strength I values per foot of backwall and eccentricity to optimize the force in the strap:

Moment.....

$$M_{strength1} = 11.9 \frac{kip \cdot ft}{ft}$$

$$M_{strength1} := M_{P.Str1} + M_{F.Str1} + 1.25\left(M_{AS} + M_{BW} + M_{Cap}\right) \ldots + 1.50 \cdot \left(M_{earth} + M_{surcharge}\right)$$

Force.....

$$F_{strength1} = 4.6 \frac{kip}{ft}$$

$$F_{strength1} := F_{Str1} + 1.50 \cdot \left(F_{earth} + F_{surcharge}\right)$$

Eccentricity.....

$$y_{str1} = 2.57\,ft$$

$$y_{str1} := \frac{M_{strength1}}{F_{strength1}}$$

*(**Note**: This dimension is from top of pile)*

Calculate the Service I values per foot of backwall and eccentricity to optimize the force in the strap:

Moment.....

$$M_{service1} = 8.9 \frac{kip \cdot ft}{ft}$$

$$M_{service1} := M_{P.Srv1} + M_{F.Srv1} + 1.00\left(M_{AS} + M_{BW} + M_{Cap}\right) \ldots + 1.00 \cdot \left(M_{earth} + M_{surcharge}\right)$$

Force.....

$$F_{service1} = 3.9 \frac{kip}{ft}$$

$$F_{service1} := F_{Srv1} + 1.00 \cdot \left(F_{earth} + F_{surcharge}\right)$$

Eccentricity.....

$$y_{srv1} = 2.28\,ft$$

$$y_{srv1} := \frac{M_{service1}}{F_{service1}}$$

*(**Note**: This dimension is from top of pile)*

Calculate Design Forces for Tie-Straps <u>per foot of back wall for moment requirement</u>

Note: For the tie strap, only 1 strap is assumed in the calculations. The geotechnical engineer should be consulted to determine the length of the strap required. If additional straps are required, place the resultant of the straps about the current design location.

Distance between tie-strap and top of pile..... $y_{strap} := 2.5 \cdot ft$

$y_{strap} = 2.5\ ft$

*(**Note**: Options* $\begin{pmatrix} y_{str1} \\ y_{srv1} \end{pmatrix} = \begin{pmatrix} 2.572 \\ 2.277 \end{pmatrix} ft$ *This dimension is from top of pile)*

Factored design force for tie-strap..... $Fr_{strapM} := \frac{M_{strength1}}{y_{strap}}$

$Fr_{strapM} = 4.78 \frac{kip}{ft}$

Service design force for tie-strap..... $F_{strapM} := \frac{M_{service1}}{y_{strap}}$

$F_{strapM} = 3.58 \frac{kip}{ft}$

Calculate Design Forces for Tie-Straps <u>per foot of back wall for lateral load requirement</u>

Factored design force for tie-strap..... $Fr_{strapF} := F_{strength1}$

$Fr_{strapF} = 4.64 \frac{kip}{ft}$

Service design force for tie-strap..... $F_{strapF} := F_{service1}$

$F_{strapF} = 3.93 \frac{kip}{ft}$

Governing design forces for Tie-Straps

Factored design force for tie-strap..... $Fr_{strap} := \max(Fr_{strapM}, Fr_{strapF})$

$Fr_{strap} = 4.78 \frac{kip}{ft}$

Service design force for tie-strap..... $F_{strap} := \max(F_{strapM}, F_{strapF})$

$F_{strap} = 3.93 \frac{kip}{ft}$

B2. Back wall design

Calculate Design Moments for Backwall per foot of back wall

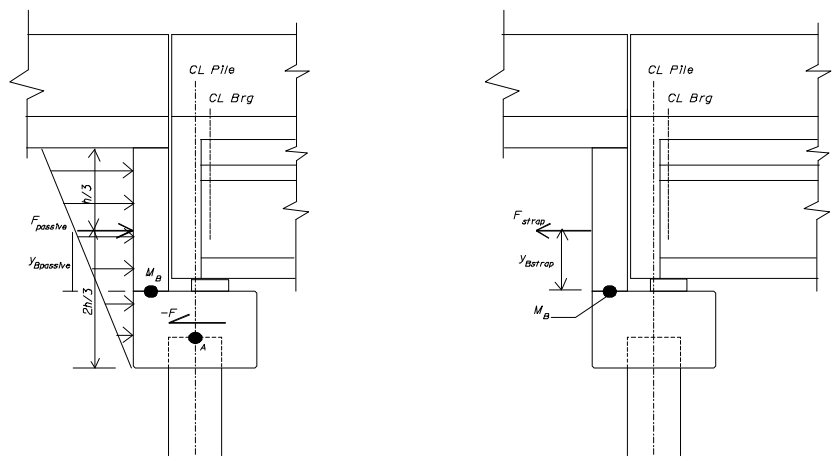

Back wall design moment location

Passive Earth Pressure

For purposes of this design example, this condition will assume that if the lateral forces are applied in the direction towards the back wall, the passive earth resistance will be activated. To minimize calculations, it is assumed that the passive resistance mobilized will be equal to the lateral applied loads. With this assumption, the moment for the back wall design can be calculated by taking the applied lateral loads at the location of the resultant passive force and multiplying by the arm to the design moment location of the back wall.

The engineer should use judgement in figuring out the way in which these loads can be resisted. The approach slab can offer some resistance as well as the piles. Conservatively are assumed to be resisted only by the soil behind the wall.

Distance to pt. B..... $y_{Bpassive} := \frac{2}{3}\left(h_{EB} + h_{BW}\right) - h_{EB}$

$y_{Bpassive} = 2.50\,ft$

Factored design force for back wall.... $Mr_{passive} := F_{Str1} \cdot y_{Bpassive}$

$Mr_{passive} = 2.31 \frac{kip \cdot ft}{ft}$

*(**Note**: Active earth pressure and surcharge loads are not included since they are not reversible).*

Service design force for back wall.... $M_{passive} := F_{Srv1} \cdot y_{Bpassive}$

$M_{passive} = 3.63 \frac{kip \cdot ft}{ft}$

Check to see if there is sufficient force in the passive pressure:

Passive pressure..... $p_p = k_p \cdot \gamma_{soil} \cdot z + 2 \cdot c \cdot \sqrt{k_p}$

where the coefficient of lateral earth pressure..... $k_p := 6$

*(**Note**: LRFD Figure 3.11.5.4-1 for q = 90 deg and angle of internal friction = 29 deg.)*

depth below surface of soil... $z := h_{EB} + h_{BW}$ *(**Note**: Use full depth of endbent wall and cap)*

$z = 7.5\,ft$

soil cohesion..... $c := 0 \cdot ksf$ *(**Note**: Assuming fine sand backfill)*

passive pressure activated..... $p_p := k_p \cdot \gamma_{soil} \cdot z + 2 \cdot c \cdot \sqrt{k_p}$

$p_p = 5.175\,ksf$

Service passive pressure force per foot of back wall..... $F_{passive} := \left(\frac{1}{2} \cdot p_p \cdot z\right)$

$F_{passive} = 19.4 \frac{kip}{ft}$

Factored passive pressure force per foot of back wall..... $Fr_{passive} := \gamma_p \cdot \left(\frac{1}{2} \cdot p_p \cdot z\right)$ where $\gamma_p = 1.5$

$Fr_{passive} = 29.1 \frac{kip}{ft}$

By inspection, the assumption that the soil has sufficient capacity in passive earth pressure is valid since the factored resistance, $Fr_{passive} = 29.1 \frac{kip}{ft}$, is greater than the factored design force, $F_{Str1} = 0.9 \frac{kip}{ft}$.

Similarly, the service resistance, $F_{passive} = 19.4 \frac{kip}{ft}$, is greater than the service design force, $F_{Srv1} = 1.5 \frac{kip}{ft}$. Therefore, assumption is valid.

<u>Tie-straps</u>

Distance to pt. B..... $y_{Bstrap} := \left(y_{strap} + Pile_{embed}\right) - h_{EB}$

$y_{Bstrap} = 1.00\,ft$

Factored design force for back wall.... $Mr_{strap} := Fr_{strap} \cdot y_{Bstrap}$

$Mr_{strap} = 4.78 \frac{kip \cdot ft}{ft}$

Service design force for back wall.... $M_{strap} := F_{strap} \cdot y_{Bstrap}$

$M_{strap} = 3.93 \frac{kip \cdot ft}{ft}$

<u>Back wall design moments:</u>

Strength..... $Mr_{BW} := \max\left(Mr_{passive}, Mr_{strap}\right) \cdot L_{BW}$

$Mr_{BW} = 4.8\,ft \cdot kip$

Service..... $M_{BW} := \max\left(M_{passive}, M_{strap}\right) \cdot L_{BW}$

$M_{BW} = 3.9\,ft \cdot kip$

Factored resistance $M_r = \phi \cdot M_n$

$$M_r = \phi \cdot A_s \cdot f_y \cdot \left[d_s - \frac{1}{2} \cdot \left(\frac{A_s \cdot f_y}{0.85 \cdot f_{c.sub} \cdot b} \right) \right]$$

where $M_r := Mr_{BW}$

$b := L_{BW}$

Initial assumption for area of steel required

Size of bar..... $bar := "5"$

Proposed bar spacing..... $spacing := 12 \cdot in$

*(**Note**: #5 @ 12" spacing reinforcement requirement is governed by minimum steel and not moment capacity.)*

Bar area..... $A_{bar} = 0.310\,in^2$

Bar diameter..... $dia = 0.625\,in$

Area of steel provided per foot of back wall

$A_s = 0.31\,in^2$

Distance from extreme compressive... fiber to centroid of reinforcing steel $d_s := t_{BW} - cover_{sub.earth} - \frac{dia}{2}$

$d_s = 7.7\,in$

Solve the quadratic equation for the area of steel required

Given $M_r = \phi \cdot \left[\phi \cdot A_s \cdot f_y \cdot \left[d_s - \frac{1}{2} \cdot \left(\frac{A_s \cdot f_y}{0.85 \cdot f_{c.sub} \cdot b} \right) \right] \right]$

$A_{s.reqd} := \mathrm{Find}(A_s)$

$A_{s.reqd} = 0.16\,in^2$

The area of steel provided, $A_s = 0.31\,in^2$, should be greater than the area of steel required, $A_{s.reqd} = 0.16\,in^2$. If not, decrease the spacing of the reinforcement. Once A_s is greater than $A_{s.reqd}$, the proposed reinforcing is adequate for the design moments.

Moment capacity provided..... $M_{r.prov} := \phi \cdot A_s \cdot f_y \cdot \left[d_s - \frac{1}{2} \cdot \left(\frac{A_s \cdot f_y}{0.85 \cdot f_{c.sub} \cdot b} \right) \right]$

$M_{r.prov} = 10.5\,ft \cdot kip$

Crack Control by Distribution Reinforcement [LRFD 5.7.3.4]

Concrete is subjected to cracking. Limiting the width of expected cracks under service conditions increases the longevity of the structure. Potential cracks can be minimized through proper placement of the reinforcement. The check for crack control requires that the actual stress in the reinforcement should not exceed the service limit state stress (LRFD 5.7.3.4). The stress equations emphasize bar spacing rather than crack widths.

Stress in the mild steel reinforcement at the service limit state

$$f_{sa} = \frac{z}{(d_c \cdot A)^{\frac{1}{3}}} \le 0.6 \cdot f_y$$

Crack width parameter.....

$$z = \begin{pmatrix} \text{"moderate exposure"} & 170 \\ \text{"severe exposure"} & 130 \\ \text{"buried structures"} & 100 \end{pmatrix} \cdot \frac{kip}{in}$$

The environmental classifications for Florida designs do not match the classifications to select the crack width parameter. For this example, a "Slightly" or "Moderately" aggressive environment corresponds to "moderate exposure" and an "Extremely" aggressive environment corresponds to "severe exposure".....

$Environment_{super} = \text{"Slightly"}$ aggressive environment

$$z := 170 \cdot \frac{kip}{in}$$

Distance from extreme tension fiber to center of closest bar (concrete cover need not exceed 2 in.).....

$$d_c := \min\left(t_{BW} - d_s, 2 \cdot in + \frac{dia}{2}\right)$$

$$d_c = 2.313\,in$$

Number of bars per design width of back wall.....

$$n_{bar} := \frac{b}{spacing}$$

$$n_{bar} = 1$$

Effective tension area of concrete. surrounding the flexural tension reinforcement.....

$$A := \frac{(b) \cdot (2 \cdot d_c)}{n_{bar}}$$

$$A = 55.5\,in^2$$

Service limit state stress in reinforcement..

$$f_{sa} := \min\left[\frac{z}{(d_c \cdot A)^{\frac{1}{3}}}, 0.6 \cdot f_y\right]$$

$$f_{sa} = 33.7\,ksi$$

The neutral axis of the section must be determined to determine the actual stress in the reinforcement. This process is iterative, so an initial assumption of the neutral axis must be made.

$x := 1.5 \cdot in$

Given $\frac{1}{2} \cdot b \cdot x^2 = \frac{E_s}{E_{c.sub}} \cdot A_s \cdot (d_s - x)$

$x_{na} := Find(x)$

$x_{na} = 1.5\,in$

Compare the calculated neutral axis x_{na} with the initial assumption x. If the values are not equal, adjust $x = 1.5\,in$ to equal $x_{na} = 1.5\,in$.

Tensile force in the reinforcing steel due to service limit state moment.....

$$T_s := \frac{M_{BW}}{d_s - \frac{x_{na}}{3}}$$

$T_s = 6.574\,kip$

Actual stress in the reinforcing steel due to service limit state moment.....

$$f_{s.actual} := \frac{T_s}{A_s}$$

$f_{s.actual} = 21.2\,ksi$

The service limit state stress in the reinforcement should be greater than the actual stress due to the service limit state moment.

$$LRFD_{5.7.3.3.4} := \begin{cases} \text{"OK, crack control is satisfied"} & \text{if } f_{s.actual} \le f_{sa} \\ \text{"NG, increase the reinforcement provided"} & \text{otherwise} \end{cases}$$

$LRFD_{5.7.3.3.4} = \text{"OK, crack control is satisfied"}$

Maximum Reinforcement

The maximum reinforcement requirements ensure the section has sufficient ductility and is not overreinforced.

Area of steel provided

$A_s = 0.31\,in^2$

Stress block factor.....

$$\beta_1 := \max\left[0.85 - 0.05 \cdot \left(\frac{f_{c.sub} - 4000 \cdot psi}{1000 \cdot psi}\right), 0.65\right]$$

$\beta_1 = 0.775$

Distance from extreme compression fiber to the neutral axis of section.....

$$c := \frac{A_s \cdot f_y}{0.85 \cdot f_{c.sub} \cdot \beta_1 \cdot b}$$

$c = 0.4\,in$

Effective depth from extreme compression fiber to centroid of the tensile reinforcement

$$d_e = \frac{A_{ps} \cdot f_{ps} \cdot d_p + A_s \cdot f_y \cdot d_s}{A_{ps} \cdot f_{ps} + A_s \cdot f_y}$$

for a non-prestressed section..... $d_e := d_s$

$d_e = 7.7\,in$

The $\frac{c}{d_e} = 0.056$ ratio should be less than 0.42 to satisfy maximum reinforcement requirements.

$$LRFD_{5.7.3.3.1} := \begin{cases} \text{"OK, maximum reinforcement requirements are satisfied"} & \text{if } \frac{c}{d_e} \le 0.42 \\ \text{"NG, section is over-reinforced, see LRFD equation C5.7.3.3.1-1"} & \text{otherwise} \end{cases}$$

$LRFD_{5.7.3.3.1}$ = "OK, maximum reinforcement requirements are satisfied"

Minimum Reinforcement

The minimum reinforcement requirements ensure the moment capacity provided is at least 1.2 times greater than the cracking moment.

Modulus of Rupture..... $f_r := 0.24 \cdot \sqrt{f_{c.sub} \cdot ksi}$

$f_r = 562.8\,psi$

Section modulus..... $S := \frac{b \cdot t_{BW}^2}{6}$

$S = 288.0\,in^3$

Cracking moment..... $M_{cr} := f_r \cdot S$

$M_{cr} = 13.5\,kip \cdot ft$

Required flexural resistance..... $M_{r.reqd} := \min(1.2 \cdot M_{cr}, 133 \cdot \% \cdot M_r)$

$M_{r.reqd} = 6.4\,ft \cdot kip$

Check that the capacity provided, $M_{r.prov} = 10.5\,ft \cdot kip$, exceeds minimum requirements, $M_{r.reqd} = 6.4\,ft \cdot kip$.

$$LRFD_{5.7.3.3.2} := \begin{cases} \text{"OK, minimum reinforcement for moment is satisfied"} & \text{if } M_{r.prov} \ge M_{r.reqd} \\ \text{"NG, reinforcement for moment is less than minimum"} & \text{otherwise} \end{cases}$$

$LRFD_{5.7.3.3.2}$ = "OK, minimum reinforcement for moment is satisfied"

Shrinkage and Temperature Reinforcement [LRFD 5.10.8.2]

Size of bar ("4" "5" "6" "7") $bar_{st} := \text{"5"}$

Shrinkage reinforcement provided..... $bar_{spa.st} := 12 \cdot in$

Bar area..... $A_{bar} = 0.31\,in^2$

Bar diameter..... $dia = 0.625\,in$

Gross area of section..... $A_g := t_{BW} \cdot L_{BW}$

$A_g = 144.0\,in^2$

Minimum area of shrinkage and temperature reinforcement..... $A_{ST} := \frac{0.11 \cdot ksi \cdot A_g}{f_y}$

$A_{ST} = 0.26\,in^2$

Maximum spacing for shrinkage and temperature reinforcement..... $spacing_{ST.reqd} := \min\left(\frac{b}{\frac{A_{ST}}{A_{bar}}}, 3 \cdot t_{BW}, 18 \cdot in\right)$

$spacing_{ST.reqd} = 14.1\,in$

The bar spacing should be less than the maximum spacing for shrinkage and temperature reinforcement

$$LRFD_{5.7.10.8} := \begin{cases} \text{"OK, minimum shrinkage and temperature requirements"} & \text{if } bar_{spa.st} \le spacing_{ST.reqd} \\ \text{"NG, minimum shrinkage and temperature requirements"} & \text{otherwise} \end{cases}$$

$LRFD_{5.7.10.8} = \text{"OK, minimum shrinkage and temperature requirements"}$

C. Summary of Reinforcement Provided

Moment reinforcement (each face)

Bar size..... bar = "5"

Bar spacing..... spacing = 12 in

Temperature and Shrinkage

Bar size..... $bar_{shrink.temp}$ = "5"

Bar spacing..... $bar_{spa.st} = 12\,in$

Tie-straps

Location of strap from bottom of back wall..... $y_{Bstrap} = 1\,ft$

Factored design force..... $Fr_{strap} = 4.78\,\frac{kip}{ft}$

Service design force..... $F_{strap} = 3.93\,\frac{kip}{ft}$

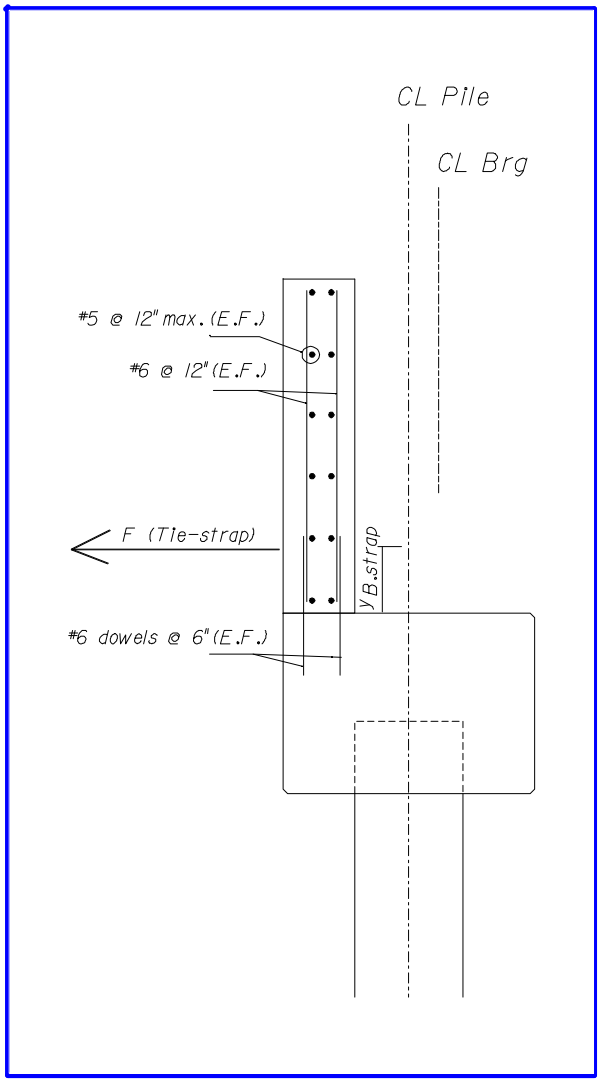

Defined Units