REINFORCED CONCRETE BOX CULVERT AND WINGWALL DESIGN AND ANALYSIS COMPUTER PROGRAM USER'S MANUAL

Version 2.3

Structures Design Office
Florida Department of Transportation

February, 1993

TABLE OF CONTENTS

DISCLAIMER vi

ABSTRACT

PREFACE

METHOD OF SOLUTION 1

DIRECT ELEMENT METHOD OF BOX CULVERT ANALYSIS 2

THE MEMBER FLEXIBILITY MATRIX $[ASA^T]^{-1}$ 5

DEAD LOAD, EARTH PRESSURE AND WATER PRESSURE 6

SERVICE LOAD DESIGN 7

LOAD FACTOR DESIGN 10

FATIGUE STRESS LIMITS 14

WINGWALL DESIGN CRITERIA 16

TIE-IN LENGTH OF SKEWED WINGWALL 17

USER INSTRUCTIONS 19

INPUT DATA TABLE 20

OUTPUT DATA 31

BAR SCHEDULE 35

EXAMPLES 37

STANDARD INPUT AND OUTPUT 38

SPECIAL AND DETAILED INPUT AND OUTPUT 43

APPENDIX A PROGRAM FLOW CHART 54

APPENDIX B VARIABLE LISTING 56

APPENDIX C 64

APPENDIX D 66

APPENDIX E BLANK INPUT CODING FORMS 72

INDEX . . . 75

LIST OF FIGURES

FIGURE		
1	Boundary Conditions	1
2	The P,X Diagram	
3	The F,e Diagram	2
4	Member Statics Matrix	3
5	Member SA_t Matrix	3
6	Member External Stiffness Matrix .	4
	Stress Block	7
8	Stress, Strain Diagram	10
9	P,M Diagram	12
10	Wingwall Length Criteria	16
11	Tie-in Length of Skewed Wingwall (0°-15°, 180°-165°)	17
12	Tie-in Length of Skewed Wingwall (15°-45°)	18
13	Bar Type Diagram .	34
14	Member Reference Diagram .	36

LIST OF TABLES

TABLE

1 Input Data Description 20

2 Variable Listing 56

DISCLAIMER

Neither the programmer nor the Department take any responsibility for the results this program may produce or for the principles used and procedures developed within the program and its documentation. It is required that a competent user will reasonably check all results to assure validity and be, himself, fully responsible for the resulting plans he may develop while using this program as part of the preparation process.

Paul T. C. Lee, P.E
North Carolina Department of Transportation

No warranty, expressed or implied, is made by the Florida Department of Transportation as to the accuracy and functioning of the added program text or the results it produces, nor shall the fact of distribution constitute any such warranty, and no responsibility is assumed by the Florida Department of Transportation in any connection there with. The Engineer of Record assumes the entire risk as to the quality and performance of this program for his particular application.

Liang Y. Hsia, P.E.
Florida Department of Transportation

ABSTRACT

The Reinforced Concrete Box Culvert and Wingwall Design and Analysis Computer Program is the result of the joint efforts by North Carolina and Florida Departments of Transportation.

The user may analyze or design a one, two, three or four barrel reinforced concrete box culvert. Either service load or load factor design method may be selected. Each of the barrels may have any clear span from a minimum of two feet and a clear height from two feet to fourteen feet. All barrels in one culvert are assumed to be identical in size and shape. The culvert in this program may be a detached unit, an extended unit or a linked unit.

Individually, the wingwalls extended from each corner of box culvert may be placed on different angles, the wingwall tops may be level or sloped and the wingwall lengths may be designed or specified to meet job site requirements.

Environment conditions ranging from slightly aggressive to extremely aggressive must be selected to determine the required concrete type and cover.

By selecting the minimum output option of this program, the output may be processed into the construction plans in conjunction with the Florida Department of Transportation Roadway and Traffic Design Standards. This program may also be applied as a tool for special design and analysis.

PREFACE

The original Reinforced Concrete Box Culvert Computer Program was developed by Paul T. C. Lee of North Carolina Department of Transportation. This program was later modified by Arthur J. Haywood, Larry M. Sessions, Liang Y. Hsia and Elsie R. Clary of Florida Department of Transportation to add a wingwall design feature and to comply with the Florida DOT Roadway and Traffic Standards. The updated Version 2.3 was prepared to comply with the Florida DOT Special Provision 346 Portland Cememt Concrete and AASHTO load factor.

The addition of skewed wingwall, environment options, culvert extension and unit conversion were managed by Robert C. Burnett Jr., P.E. in 1985 and coordinated by Liang Y. Hsia in 1991 and 1992.

The documentation was prepared by Paul T. C. Lee and Liang Y. Hsia. The Florida version was typed by Charlene A. Williams, proofread by Charlie B. Harvey P.E., Chris Wild and Connie Adams and reviewed by Robert E. Nichols, P.E. All diagrams and coding forms were prepared by William E. Howell and Structures CADD engineers. The screen data entry panels were developed by Kenneth B. Graham, P.E. This documentation is available on either double sided, high density diskette or printed copy.

METHOD OF SOLUTION

The method of analysis is the displacement or stiffness method. In this method, a matrix using the member's stiffness is formed to represent the structure. Member stiffness is derived for three possible movements which are rotational, vertical and horizontal movements at the ends of members. Then the following boundary conditions are applied to the matrix:

a. No vertical displacement at the outside ends of bottom slab.

b. No lateral displacement at right end of bottom slab.

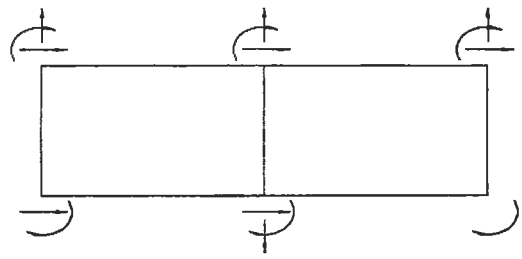

Fig. 1 Boundary Conditions

Through matrix maneuver, the displacements at the ends of each member are computed for each given loading condition. Then the exact moments and forces are determined by using the computed displacements. These moments and forces are used to develop stresses, design reinforcements or adjust member depth. If the member depth is increased, its impact is reevaluated as above.

The length of each member for analysis purposes is measured from center line to center line of the supporting members. It is assumed that loading applied at top slab will be uniformly distributed over the entire bottom slab. This assumption is based upon the premise that the bottom slab is cast upon a mat of granular material. A more refined assumption seems impractical due to the lack of precise soil information at each site.

DIRECT ELEMENT METHOD OF BOX CULVERT ANALYSIS

The direct element method is a procedure in which the external stiffness matrix ASA^T is built directly from geometric and elastic properties of the elements, such as the top slab of a culvert, taken one member at a time.

The required input data includes the degree of freedom; the number of members and, for each member, the global degrees of freedom NP1, NP2, NP3, NP4, NP5 and NP6 at the initial and terminal points; the coordinates of the terminal points referenced to the initial point as origin; the modulus of elasticity and the cross-sectional area, A.

The procedure involves computing the local ASA^T matrix of each member in succession and assembling the elements of the local ASA^T matrix into the global ASA^T matrix.

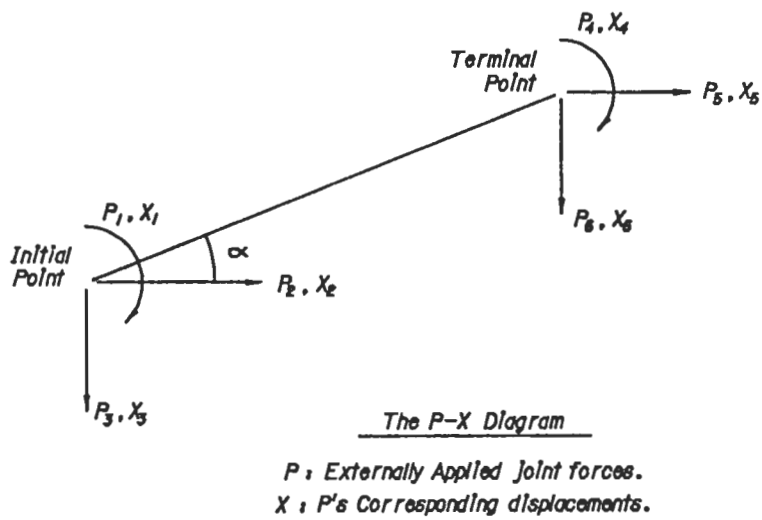

Fig. 2 The P,X Diagram

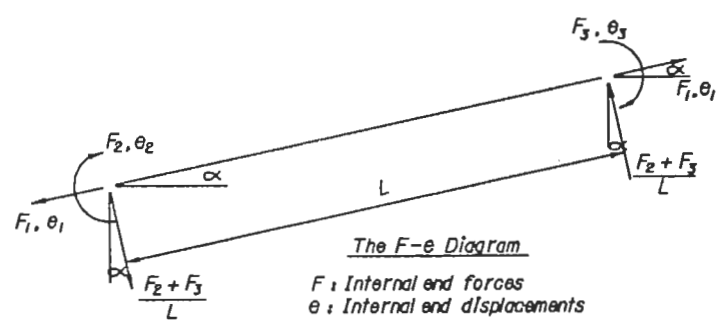

Fig. 3 The F,e Diagram

$[A] =$

P \ F	1	2	3
1	0	1	0
2	$-\cos\alpha$	$\frac{\sin\alpha}{L}$	$\frac{\sin\alpha}{L}$
3	$\sin\alpha$	$\frac{\cos\alpha}{L}$	$\frac{\cos\alpha}{L}$
4	0	0	1
5	$\cos\alpha$	$\frac{-\sin\alpha}{L}$	$\frac{-\sin\alpha}{L}$
6	$-\sin\alpha$	$\frac{-\cos\alpha}{L}$	$\frac{-\cos\alpha}{L}$

Fig. 4 Member Statics Matrix

$[SA^T] =$

0	$-C\,K_1$	$S\,K_1$	0	$C\,K_1$	$-S\,K_1$
$4K_2$	$6\frac{S}{L}K_2$	$6\frac{C}{L}K_2$	$2K_2$	$-6\frac{S}{L}K_2$	$-6\frac{C}{L}K_2$
$2K_2$	$6\frac{S}{L}K_2$	$6\frac{C}{L}K_2$	$4K_2$	$-6\frac{S}{L}K_2$	$-6\frac{C}{L}K_2$

$$S = \sin\alpha;\ C = \cos\alpha;\ K_1 = \frac{EA}{L};\ K_2 = \frac{EI}{L}$$

Fig. 5 The Member $[SA^T]$ Matrix

$$[ASA^T] = \begin{bmatrix} 4K_2 & 6\frac{S}{L}K_2 & 6\frac{C}{L}K_2 & 2K_2 & -6\frac{S}{L}K_2 & -6\frac{C}{L}K_2 \\ 6\frac{S}{L} & C^2K_1+12(\frac{S}{L})^2K_2 & -CSK_1+12\frac{CS}{L^2}K_2 & 6\frac{S}{L}K_2 & -C^2K_1-12(\frac{S}{L})^2K_2 & CSK_1-12\frac{CS}{L^2}K_2 \\ 6\frac{C}{L} & -CSK_1+12\frac{CS}{L^2}K_2 & S^2K_1+12(\frac{C}{L})^2K_2 & 6\frac{C}{L}K_2 & -CSK_1-12\frac{CS}{L^2}K_2 & -S^2K_1-12(\frac{C}{L})^2K_2 \\ 2 & 6\frac{S}{L}K_2 & 6\frac{C}{L}K_2 & 4K_2 & -6\frac{S}{L}K_2 & -6\frac{C}{L}K_2 \\ -6\frac{S}{L} & -C^2K_1-12(\frac{S}{L})^2K_2 & CSK_1-12\frac{CS}{L^2}K_2 & -6\frac{S}{L}K_2 & C^2K_1+12(\frac{S}{L})^2K_2 & -CSK_1+12\frac{CS}{L^2}K_2 \\ -6\frac{C}{L} & CSK_1-12\frac{CS}{L^2}K_2 & -S^2K_1-12(\frac{C}{L})^2K_2 & -6\frac{C}{L}K_2 & -CSK_1+12\frac{CS}{L^2}K_2 & S^2K_1+12(\frac{C}{L})^2K_2 \end{bmatrix}$$

Fig 6 The Member External Stiffness Matrix

THE MEMBER FLEXIBILITY MATRIX $[ASA^T]^{-1}$

$$[AST^T]^{-1} = \frac{1}{[AST^T]}$$

In the displacement method of culvert analysis, the joint displacements matrix [X] is first computed from Eq.(6), then the internal end forces matrix [F] from Eq.(4).

$$[P] = [A] \times [F] \text{ ----------} (1$$

$$[e] = [B] \times [X] = [A^T] \times [X] \text{ ----------} (2)$$

$$[F] = [S] \times [e] \text{ ----------} (3)$$

Substituting Eq. (2) in Eq. (3)

$$[F] = [SA^T] \times [X] \text{ ----------} (4)$$

Substituting Eq. (4 in Eq. (1)

$$[P] = [AST^T] \times [X] \text{ ----------} (5)$$

from which

$$[X] = [AST^T]^{-1} \times [P] \text{ ----------} (6)$$

DEAD LOAD, EARTH PRESSURE AND WATER PRESSURE

The dead loads on the top slab include soil weight and concrete slab weight. The soil weight will default at 120 PCF. The concrete weight is set at 150 PCF. The equivalent fluid weight for wall earth pressure will default to 30 PCF.

The program also investigates the condition of submerged soil acting on the walls. The submerged soil pressure is taken as one half of the earth pressure acting on outside walls. Other dead loads in this case are taken as full earth pressure. Live load surcharge will default to 2 feet.

Water pressure inside culvert barrels must be checked since this pressure may reverse the wall moments and add to the slab positive moments. The program will use the water pressure from the culvert flowing full and empty as two loading cases.

LIVE LOAD

Influence lines are derived from applying a unit load moving from left to right along the top slab at twentieth points of each span. Based on these results the maximum moment and shear at tenth points of each member are calculated.

Live load will default to the standard AASHTO HS20 load or military load, whichever controls. The user may specify the axle weight for a special overload truck. The user may also specify a single axle load with a specified design fill as an alternate to the regular live load. This is usually used for heavy construction vehicles where the axles are spaced far apart so that only one axle is on the culvert at a time. Impact will apply to the top and bottom slabs and the exterior and interior walls of the box culvert.

When the culvert is subjected to traffic operating directly on the top slab or when fill on the culvert is less than 2 feet deep, the wheel loads are distributed as are those on bridges. When fill is more than 2 feet deep, the wheel loads are distributed over squares with sides equal to 1.75 times the depth of fill. When these squares overlap, the total of the wheel loads is uniformly distributed over the combined, reduced gross area.

Live load may be neglected when the depth of fill is greater than 8 feet, exceeds the span length of a single culvert or exceeds the total width of a multiple barrel culvert.

SERVICE LOAD DESIGN

The following procedure is used to compute the required area of steel at three critical sections of each member; i.e., left end, midpoint and right end. The steel stress is given from input or defaulted as f_s and then the stress block is determined through the iteration process. No compression steel is considered and all tension steel is assumed to be placed in one row.

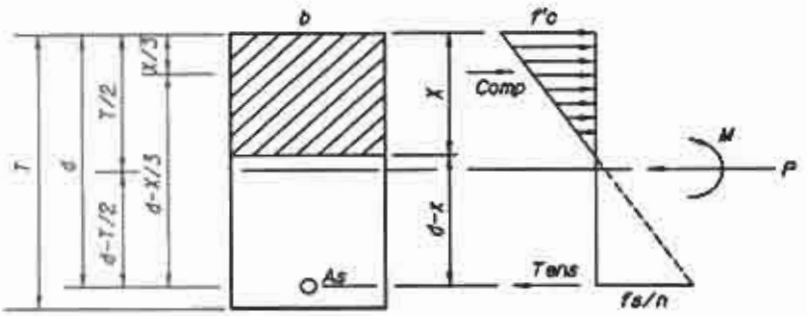

Fig. 7 Stress Block

1. Internal moment equals external moment : Mi = Me

$$M_{A_s} = 0; \quad f'_c\,(b)\left(\frac{1}{2}\right)\left(d-\frac{x}{3}\right) = M+P\left(d-\frac{T}{2}\right)$$

2. Linear stress distribution:

$$\frac{f'_c}{x} = \frac{\frac{f_s}{n}}{d-x}$$

Combine Eq. 1 and 2 to eliminate f'_c.

$$\frac{x(f_s)}{nx(d-x)} \times \frac{b}{2}\left(d-\frac{x}{3}\right) = M+P\left(d-\frac{T}{2}\right)$$

$$\left[\frac{f_s(b)}{6n}\right] \qquad \left\{\left[\frac{f_s bd}{2n}\right] + \left[M+P\left(d-\frac{T}{2}\right)\right]\right\} x + \left[M+P\left(d-\frac{T}{2}\right)\right] d = 0$$

The equation f(x) is solved by Newton's iteration process for polynomial equations. The value of X is computed approximately to an accuracy of 0.01 inch.

$$x_{(n+1)} = x_n \frac{-f(x)}{f'(x)}$$

If there is no tension stress because of large P and small M, then

$$f'_c = \frac{M\overline{C}}{I} + \frac{P}{A}$$

and the minimum amount of reinforcing steel would be used. If there are tension stresses, the concrete stress $f'_c = f_s X/n(d-X)$ and the area of steel $A_s = [\frac{1}{2}(f'_c)(X)(b) - P]/f_s$.

The shear stress (f_v) is computed as follows:

$$f_v = \frac{v^*}{bd}$$

where b = 12.0 inches

*At the left or the right end of a member where sections are located less than a distance d from the face of the support, they will be designed for the same shear, V, as that computed at a distance d.

The allowable concrete stress in compression is assumed to be $0.4f'_c$. The allowable concrete shear stress is computed as follows:

For fills less than 2 feet:

$$V_c = 0.95 \sqrt{f'_c}$$

OR

$$V_c = 0.9 \sqrt{f'_c} + 1100\ \rho \left(\frac{V_d}{M}\right)$$

whichever is greater. (V_c shall not exceed $1.6 \sqrt{f'_c}$

For fills greater than or equal to 2 feet:

$$V_c = 0.95 \sqrt{f'_c}$$

OR

$$V_c = \sqrt{f'_c} + 2200\ \rho \left(\frac{V_d}{M}\right)$$

whichever is greater. (V_c shall not exceed $1.8 \sqrt{f'_c}$

ρ = reinforced ratio = A_s/bd

$$\frac{V_d}{M} \leq 1.0$$

LOAD FACTOR DESIGN

The following procedure is used to check the critical sections of each member.

1. Loading = $1.3\ (D + 1.667(L+I)_n + \beta_E\ E. + W.P.$

   β_E = 1.0 for rigid culverts, including reinforced concrete boxes;
   E = Earth pressure;
   W.P. = Water pressure, refer to page 6 about two loading cases.

2. A concrete stress of 0.85 f'_c will be assumed uniformly distributed over equivalent compression zone bounded by the edges of a cross section and a straight line located parallel to the neutral axis at a distance $a = \beta_1 C$ from the fiber of maximum compression strain.

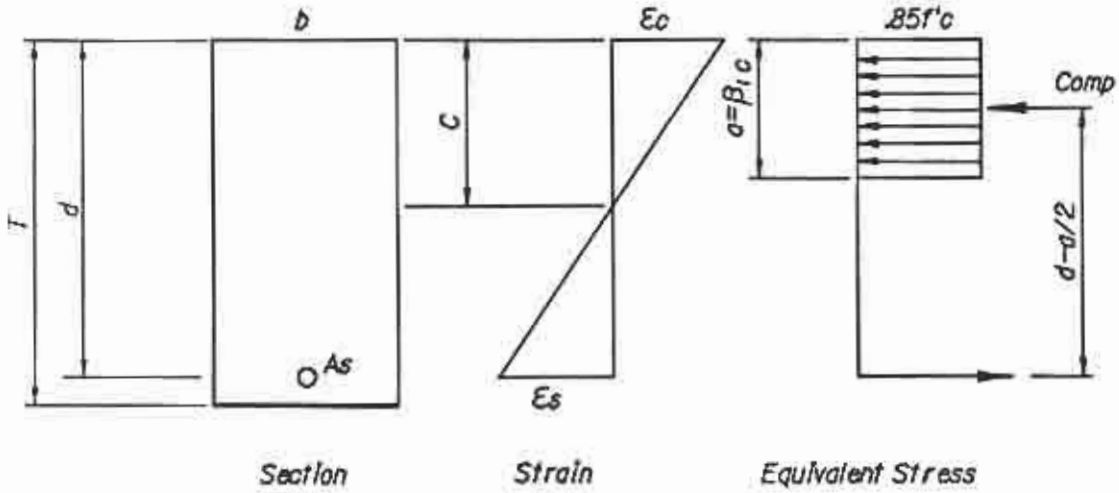

Fig. 8 Stress, Strain Diagram

$\beta_1 = 0.85$ *when* $f'_c \leq 4000$ *psi*

OR

$$\beta_1 = 0.85 - 0.05\ \frac{f'_c - 4000}{1000}\ \textit{when}\ f'_c > 4000\ \textit{psi; however,}\ \beta_1 \geq 0.65$$

3. No compression steel is considered and all tension steel assumed to be in one layer.

4. Assume As Set

$$R_u = \frac{M}{0.9bd^2}$$

$$\rho = \frac{0.85f'_c}{f_y}\left(1 - \sqrt{1 - \frac{2R_u}{0.85f'_c}}\right)$$

$$\rho_b = \frac{0.85\beta_1 f'_c}{f_y} \times \frac{87000}{87000 + f_y}$$

$$\rho \leq 0.5\rho_b^* \; ; \quad \rho \geq 0.002$$

*Best economy is achieved where $\rho = .5\rho_b$ instead of $0.75\rho_b$

$$A_s = \rho bd$$

5. Compute Mu (Pure flexure)

$$M_u = \phi\left[A_s f_y \left(d - \frac{a}{2}\right)\right]$$

$$a = \frac{A_s f_y}{0.85f'_c\, b}$$

$$\phi = 0.9$$

6. Compute Po (Pure Compression)

$$P_o = \phi\left[0.85f'_c\,(A_g - A_{st}) + A_{st}f_y\right]$$

$$\phi = 0.7$$

$$A_{st} = A_s + A_{s(\min)}$$

7. Compute M_b, P_b (Balanced Condition)

$$P_b = \phi\left[0.85f'_c \times 12 \times a_b - A_s f_y\right]$$

$$a_b = \left(\frac{87000}{87000 + f_y}\right)\beta_1 d$$

$$M_b = P_b e_b = \phi\left[0.85f'_c \times 12a_b \times \left(\frac{T}{2} - \frac{a_b}{2}\right) + A_s f_y\left(d - \frac{T}{2}\right)\right]$$

For slabs $\phi = 0.85$
For Ext. Wall $\phi = 0.8$
For Int. Wall $\phi = 0.7$

8. Assume straight line relation between pure compression and balanced conditions, balanced conditions and pure flexure.

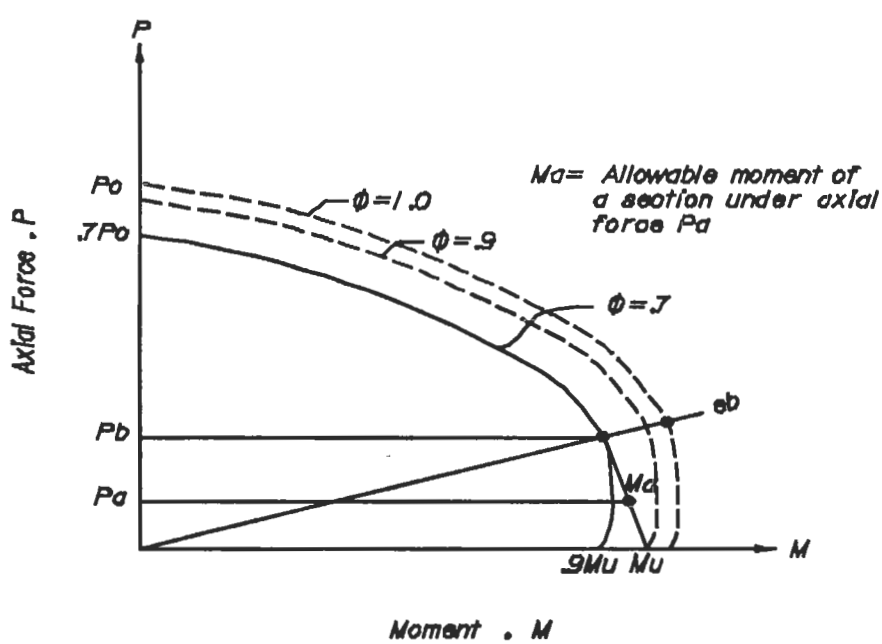

Fig. 9 P,M Diagram

9. The shear stress (f_v) is computed as follows:
The allowable concrete shear stress is computed as follows:

For fills less than 2 feet:

$$f_v = \frac{V_u}{bd}; \quad b = 12.0 \text{ inches}$$

$$V_c = 2\sqrt{f'_c}$$

OR

$$V_c = 1.9\sqrt{f'_c} + 2500\,\rho\left(\frac{V_u d}{M}\right)$$

whichever is greater. (V_c shall not exceed $3.5\sqrt{f'_c}$

ρ = reinforcement ratio = A_s / bd

$$\frac{V_u d}{M} \leq 1.0$$

For fills equal to or greater than 2 feet:

$$V_c = 2\sqrt{f'_c}$$

OR

$$V_c = 2.14\sqrt{f'_c} + 4600\,\rho\left(\frac{V_u d}{M}\right)$$

whichever is greater. (V_c shall not exceed $4.0\sqrt{f'_c}$)

$$\frac{V_u d}{M} \leq 1.0$$

FATIGUE STRESS LIMITS

The tensile reinforcement in box culvert elements subjected to repeated variations of reversals of stress shall be designed so that the actual range of stress does not exceed the allowable fatigue stress. The depth of fill also has a substantial effect on this fatigue range.

Such range between maximum and minimum stresses in tensile reinforcement caused by live load plus impact at service load shall not exceed:

$$f_f = 21 - 0.33 f_{min} + 2.4 \quad \textit{AASHTO } (8\text{-}60)$$

f_f = stress range, ksi
f_{min} = algebraic minimum stress level (tension-positive; compression-negative), ksi

1. At section where stress is not reversed.

$$f_s = \frac{M}{A_s jd}; \textit{ where,}$$

M = Live load moment range
jd = d - kd / 3 where kd is the distance from extreme compression fiber to neutral axis.

2. At section where stress is reversed.

$$f_s = \frac{+M}{A_s jd} \quad (\textit{Tensile part of stress range})$$

$$f'_s = \frac{-M}{A_s jd} \frac{k - \frac{d'}{d}}{1 - k} \quad (\textit{Compressive part of stress range}); \textit{ where,}$$

d' = distance from extreme compression fiber to centroid of compression reinforcement
d = distance from extreme compression fiber to centroid of tension reinforcement

Total stress range = $f_s + f'_s$

CRACK CONTROL

The program checks maximum service load stresses in the reinforcing steel for crack control as per AASHTO Article 17.6.4.7

$$f_s = \frac{98}{\sqrt[3]{d_c A}} \textit{ ksi} \quad \textit{AASHTO } (17\text{-}19)$$

f_s : Maximum service load stress

MINIMUM ECCENTRICITY

Minimum eccentricity will be checked for all members.

$$e = \frac{M}{P}; \quad M = P \times e$$

If e < 1", then e = 1"
If e < 0.1 x T, then e = 0.1 x T

SLENDERNESS

Slenderness will be checked for walls only

$$r = 0.3 \times \frac{T}{12.0}$$

T = wall thickness

$$r = \sqrt{\frac{I}{A}} \quad \textit{radius of gyration}$$

Slenderness will be neglected if Kl/r < 22. Where k = 2.0, l = Clear Height.

$$P_c = \pi^2 \frac{EI}{(Kl)^2} \quad \textit{AASHTO} \text{ (8-42)}$$

$$EI = \frac{E_c I_g}{2.5(1 + \beta_d)} \quad \textit{AASHTO} \text{ (8-44)}$$

$$E_c = 57000\sqrt{f'_c} \quad \textit{AASHTO} \text{ (8.7.1)}$$

$$I_g = T^3$$

$$\beta_d = \frac{\textit{Dead Load Moment}}{\textit{Maximum Total Moment}}$$

$$M_c = \delta_b \times M_{2b} \quad \textit{AASHTO} \text{ (8-40)}$$

$$\delta_b = \frac{C_m}{1 - \frac{P_u}{\phi P_c}} \geq 1 \quad \textit{AASHTO} \text{ (8-41)}$$

C_m = 1
M_c = Magnified Moment ϕ = 0.7

WINGWALL DESIGN CRITERIA

The following criteria of calculating wingwall height and length were developed by FDOT Drainage Section.

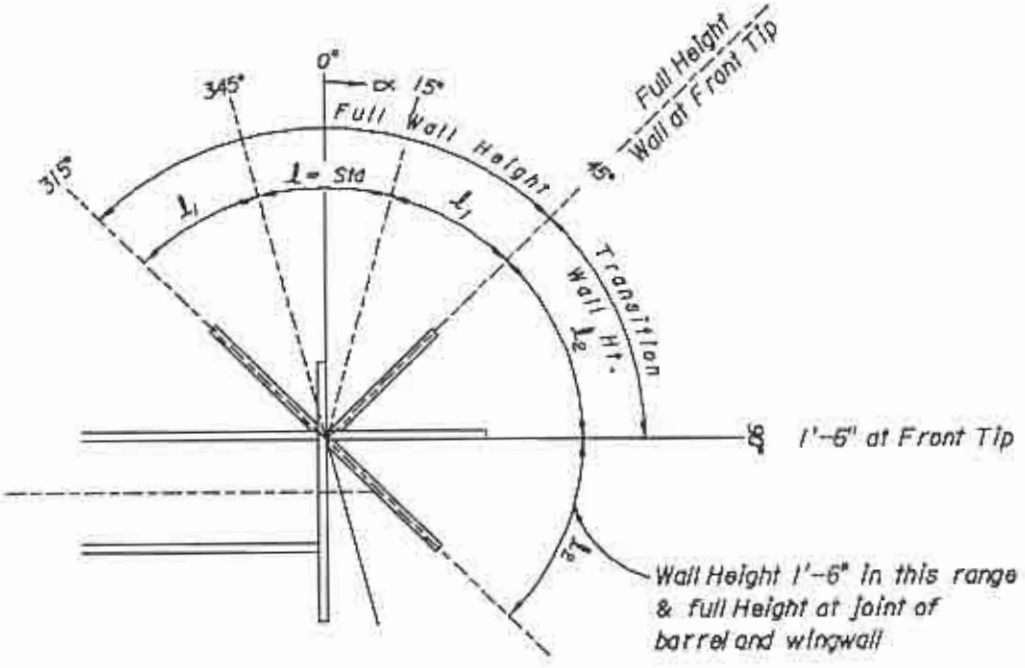

Wingwall height H = Clear height of barrel
+ Top slab thickness
+ 1'-0" headwall

Transition Wall Ht. $= H - (H - 1.5)\dfrac{\alpha - 45}{90 - 45}$

Wingwall standard length

$$l = \frac{1.5\,H - \text{Wall thickness} + 3'\text{-}0''}{\cos\alpha}$$

$$l_1 = l + (3\,H - l)\,\frac{\alpha - 15}{45 - 15} \qquad (\text{For } 15° < \alpha < 45°)$$

$$\text{or } l_1 = l + (3\,H - l)\,\frac{345 - \alpha}{345 - 315} \qquad (\text{For } 315° < \alpha < 345°)$$

$$l_2 = 3\,H$$

Fig. 10 Wingwall Length Criteria

TIE-IN LENGTH OF SKEWED WINGWALL

Tie-in length of straight wingwall is specified on Sheet 3 of 4 in FDOT Roadway and Traffic Design Standards. Figures 11 and 12 illustrates the tie-in length of skewed wingwall in different ranges of skew angles.

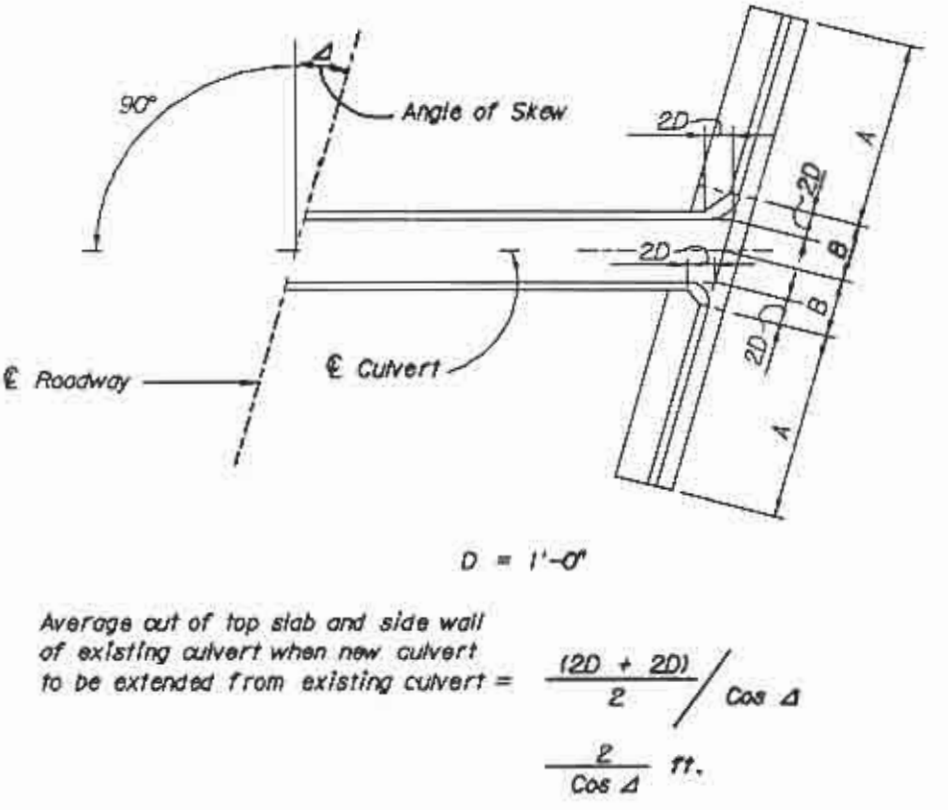

LAYOUT OF SKEW CULVERT WING
WHEN Δ VARIES FROM 0° TO 15°
& FROM 180° TO 165°

Fig. 11 Tie-in Length of Skewed Wingwall (0°-15°, 180°-165°)

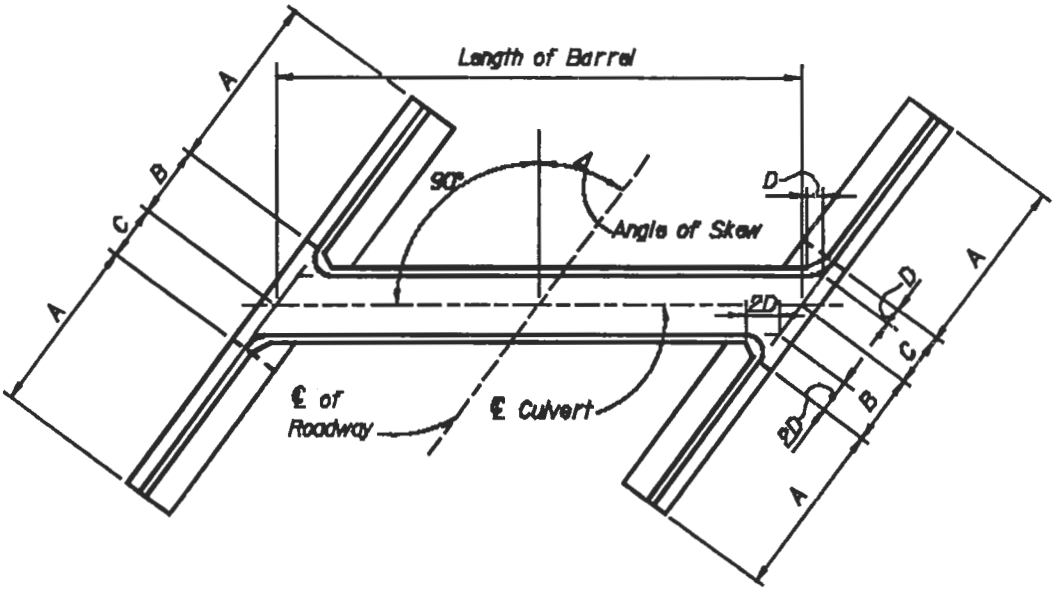

$D = 1'\text{-}0''$

Average cut of top slab and side wall of existing culvert when new culvert to be extended from existing culvert $= \dfrac{D + 2D}{2} \Big/ \cos \Delta$

$= \dfrac{3}{2 \cos \Delta}$ ft.

LAYOUT OF SKEW CULVERT
WHEN Δ VARIES FROM 15° TO 45°

Fig. 12 Tie-in Length of Skewed Wingwall (15°-45°)

USER INSTRUCTIONS

The user may select either the short coding form for routine design or the long coding form for special analysis and design. These coding forms are provided in Appendix E. Each input field and the default value is described in the following Input Data Table. The output is explained in the following sections of Output Data, Bar Schedule and Examples.

INPUT DATA TABLE

Input Requirements for Reinforced Concrete Box Culverts
and Wingwall Computer Program

Header Card and Card One

CARD NUMBER	CARD COLUMN	VARIABLE NAME	FORMAT	DESCRIPTION	DEFAULT VALUE
*	1	KAST	A1	HEADER CARD	NA
*	2- 3	COMM(I)	I2	RUN NUMBER Identification only	NA
*	4-22	COMM(I)	A19	NAME	NA
*	23-28	COMM(I)	A6	PHONE NUMBER Extension phone number	NA
*	29-80	COMM(I)	A52	HEADING Heading, project no., date	NA
1	1	KONE	I1	CARD HEAD NO. Valid code : 1	NA
1	2	LVLD	I1	LIVE LOAD Valid code 1 : HS20 2 : H20 3 : HS15 4 : H15 5 : HS10 6 : H10 7 : Blank 8 : Special 9 : None	1
1	3	LVOMT	I1	OMIT LIVE LOAD Valid code 1 : Live load to be neglected 2 : Live load to be used regardless of fill height Live load may be neglected for single box culvert if depth of fill is more than 8 ft. and exceeds span length; for multiple box culvert it may be neglected if depth of fill exceeds the distance between faces of end supports.	2
1	4	IZOF	I1	ZERO FILL STRESS CHECK Valid code 1 : Stress check at zero fill 2 : No stress check at zero fill	2
1	5-9	OVERLD	F5.0	OVERLOAD STANDARD TRUCK AXLE WEIGHT Valid code : Blank-xxxxx LB	0

Card One (Continued)

CARD NUMBER	CARD COLUMN	VARIABLE NAME	FORMAT	DESCRIPTION	DEFAULT VALUE
1	10	IDSN	I1	DESIGN METHOD Valid code 1 : Service Load Design 2 : Load Factor Design	2
1	11	MTEN	I1	PRINT M, V, P @ 1/10 POINTS Valid code 1 : Print Else : Not print	2
1	12	INFN	I1	PRINTING LIVE LOAD INFLUENCE LINE Valid code : 1 : Print Else : Not print	2
1	13-15	DNEG	F3.2	DESIGN NEGATIVE MOMENT POSITION Valid code : 0.0 - 1.0 Defined by a ratio from 0.0 to 1.0 where 0.0 represents the joint centerline and 1.0 represents the face of wall or slab. AASHTO (8.8.2)	1.0
1	16-18	EWGT	F3.0	WEIGHT OF SOIL Valid code : 000-xxx PCF	120 PCF
1	19-23	FYST	F5.0	YIELD STRENGTH OF REINFORCEMENT Fy Valid code ; Blank-xxxxx PSI	60,000 PSI
1	24-28	FSTL	F5.0	ALLOWABLE STEEL STRESS Fs Valid code : Blank-xxxxx PSI	24,000 PSI
1	29-32	FCONC	F4.0	COMPRESSIVE CONCRETE DESIGN STRESS Fc Valid code : Blank-xxxx PSI	3,400 PSI
1	33-35	FSHR	F3.0	ALLOWABLE CONCRETE SHEAR STRESS Valid code : Blank-xxx PSI Blank means by AASHTO specifications	PSI
1	36-38	FSTIR	F3.0	ALLOWABLE CONCRETE SHEAR STRESS WITH STIRRUPS Valid code : Blank-xxx PSI Blank means no stirrups desired	PSI

Card One (Continued)

CARD NUMBER	CARD COLUMN	VARIABLE NAME	FORMAT	DESCRIPTION	DEFAULT VALUE
1	39-41	ADDS	F3.2	THICKNESS INCREMENT OF SLABS Valid code : Blank-x.xx INCH	0.5 IN
1	42-44	ADDW	F3.2	THICKNESS INCREMENT OF WALLS Valid code : Blank-x.xx INCH	0.5 IN
1	45-47	COVS	F3.2	TOP SLAB CONCRETE COVER Measured from center of bar to face of concrete Slightly aggressive environment Moderately/Extremely aggressive environment Valid code : Blank-x.xx INCH	 2.5 IN 3.5 IN
1	48-50	COVB	F3.2	BOTTOM SLAB CONCRETE COVER Measured from center of bar to face of concrete Slightly aggressive environment Moderately/Extremely aggressive environment Valid code : Blank-x.xx INCH	 2.5 IN 3.5 IN
1	51-53	COVW	F3.2	EXTERIOR WALL CONCRETE COVER Measured from center of bar to face of concrete Slightly aggressive environment Moderately/Extremely aggressive environment Valid code : Blank-x.xx INCH	 2.5 IN 3.5 IN
1	54-56	COVIN	F3.2	INTERIOR WALL CONCRETE COVER Measured from center of bar to face of concrete Slightly aggressive environment Moderately/Extremely aggressive environment Valid code : Blank-x.xx INCH	 2.5 IN 3.5 IN
1	57	ISAMS	I1	SAME TOP & BOTTOM SLAB DESIGN Valid code 1 : Same thickness and same steel ELSE : Set thickness of each slab.	2
1	58	ISAMW	I1	SAME EXTERIOR & INTERIOR WALL THICKNESS Valid code 1 : Same thickness ELSE : Set thickness of each wall.	2

Card One (Continued)

CARD NUMBER	CARD COLUMN	VARIABLE NAME	FORMAT	DESCRIPTION	DEFAULT VALUE
1	59	IBSH	I1	BAR SCHEDULE Valid code 1 : Print bar schedule 2 : Not print bar schedule	1
1	60-62	SPACMAX	F3.1	MAX. BAR SPACING DESIGN Valid code : Blank-18.0 INCH	18.0 IN
1	63-65	SPACMIN	F3.1	MIN. BAR SPACING DESIGN Valid code : 04.0-18.0 INCH	4.0 IN
1	66-67	MAXSIZ	I2	MAX. BAR SIZE Valid code : 01-11	11
1	68-69	MINSIZ	I2	MIN. BAR SIZE Valid code : 04-11	4
1	70-72	CN	F3.1	MODULAR RATIO Valid code : 1-9	9
1	73	ENVIR	I1	ENVIRONMENT CONDITION Valid code : 0-3 See Note (1) : Slightly aggressive 1 : Slightly aggressive 2 : Moderately aggressive 3 : Extremely aggressive	1

NOTE:

(1) The environment condition is required to determine the default minimum concrete cover of reforcing steel and concrete class:

Under a slightly aggressive environment condition, concrete cover is 2 inches and Class II concrete is selected.

Under a moderately or extremely aggressive environment condition, concrete cover is 3 inches and Class IV concrete is selected.

Leave this field blank for a slightly aggressive environment condition.

Card Two and Card P

CARD NUMBER	CARD COLUMN	VARIABLE NAME	FORMAT	DESCRIPTION	DEFAULT VALUE
2	1	KTWO	I1	CARD NO. 2 Valid code : 2	2
2	2-5	EDLU	F4.3	EXTRA UNIFORM DEAD LOAD Valid code : Blank-x.xxx K/FT	0
2	6-10	EDLC1	F5.3	EXTRA CONCENTRATED DEAD LOAD Valid code : Blank-xx.xxx KIPS	0
2	11-13	EDLX1	F3.2	POSITION OF CONCENTRATED LOAD Measured from centerline of the leftmost wall of the culvert Valid code : Blank-x.xx FT.	0.00
2	14-18	EDLC2	F5.3	EXTRA CONCENTRATED DEAD LOAD-2 Valid code : Blank-xx.xxx KIPS	0
2	19-21	EDLX2	F3.2	POSITION OF CONCENTRATED LOAD-2 Measured from centerline of the leftmost wall of the culvert Valid code : Blank-x.xx FT.	00.0
2	22-26	EDLC3	F5.3	EXTRA CONCENTRATED DEAD LOAD-3 Valid code : Blank-xx.xxx KIPS	0
2	27-29	EDLX3	F3.2	POSITION OF CONCENTRATED LOAD-3 Measured from centerline of the leftmost wall of the culvert Valid code : Blank-x.xx FT.	00.0
2	30-34	WHEER	F5.3	SPECIAL WHEEL LIVE LOAD Enter weight of one wheel Valid code : Blank-xx.xxx KIPS	0
2	35-38	FILLR	F4.2	EARTH FILL Measured to top of slab Valid code : Blank-xx.xx FT.	00.00
2	39-42	OFACT	F4.2	OVERSTRESS FACTOR Valid code : 1.00-xx.xx	1.00
P	1	KPAS	A1	REINFORCEMENT RATIO CARD For Load Factor design only $\rho = As / bd$ Optional card always follow Card '1' or Card '2' Valid code : P	
P	2-4	PAS	F3.3	REINFORCEMENT RATIO Valid code : .xxx	.012

NOTE:
Leave Card 2 or Card P out if default value is selected.

Card Three

CARD NUMBER	CARD COLUMN	VARIABLE NAME	FORMAT	DESCRIPTION	DEFAULT VALUE
3	1	KTHR	I1	CARD NO. 3 Valid code : 3	3
3	2-3	NCARD	I2	CULVERT NUMBER Valid code : 01-99 Unique no. for identification	NA
3	4	NBOX	I1	NUMBER OF BOX CULVERT BARRELS Valid code : 1-4	NA
3	5-8	NSPAN	F4.2	CLEAR SPAN OF EACH BARREL Measured from inside of left barrel wall to right of barrel wall Valid code : 02.00-xx.xx FT.	NA
3	9-12	NHITE	F4.2	CLEAR HEIGHT Measured from top of bottom slab to bottom of top slab Valid code : 02.00-16.00 FT.	NA
3	13-17	NFILL	F5.2	DESIGN FILL Measured from bottom of top slab to the average elevation of the roadway surface. Valid code : 000.00-xxx.xx FT.	NA
3	18-22	LENG	F5.2	LENGTH OF CULVERT Measured from left to right face of culvert along center line of culvert Valid code : xxx.xx FT.	NA
3	23-25	LSKE	I3	LEFT HEADWALL SKEW ANGLE Measured from line perpendicular to center line of culvert in clockwise direction to headwall face Valid code : 000-xxx DEGREE	000
3	26-28	RSKE	I3	RIGHT SKEW ANGLE Measured from line perpendicular to center line of culvert in clockwise direction to headwall face Valid code : 000-xxx DEGREE	000

Card Three (Continued)

CARD NUMBER	CARD COLUMN	VARIABLE NAME	FORMAT	DESCRIPTION	DEFAULT VALUE
3	29	KBASE	A1	FLOOR SUPPORT JOINT CONDITION Valid code X : No floor with fixed end support H : No floor with hinged support : Full floor	BLANK
3	30-33	TSLAB	F4.2	TOP SLAB THICKNESS Leave this field blank to use default seeded minimum value to design optimized thickness Valid code : Blank-xx.xx IN.	9 IN
3	34	KFXTS	A1	FIXED TOP SLAB THICKNESS Valid code F : Fixed thickness :	BLANK
3	35-38	BSLAB	F4.2	BOTTOM SLAB THICKNESS Leave this field blank to use default seeded minimum value to design optimized thickness Valid code : Blank-xx.xx IN.	9 IN
3	39	KFXBS	A1	FIXED BOTTOM SLAB THICKNESS Valid code F : Fixed thickness :	BLANK
3	40-43	WALLR	F4.2	EXTERIOR WALL THICKNESS Leave this field blank to use default seeded minimum value to design optimized thickness Valid code : Blank-xx.xx IN.	9 IN
3	44	KFXW	A1	FIXED EXTERIOR WALL THICKNESS Valid code F : Fixed thickness :	BLANK
3	45-48	IWALLR	F4.2	INTERIOR WALL THICKNESS Leave this field blank to use default seeded minimum value to design optimized thickness Valid code : Blank-xx.xx IN.	9 IN
3	49	KFXTS	A1	FIXED INTERIOR WALL THICKNESS Valid code F : Fixed thickness :	BLANK

NOTE:
Use fixed slab or wall thickness to override the calculated thicknesses or to match the existing box culvert structure for a culvert extension project.

Card Three (Continued)

CARD NUMBER	CARD COLUMN	VARIABLE NAME	FORMAT	DESCRIPTION	DEFAULT VALUE
3	50-52	SURCH	F3.1	LIVE LOAD SURCHARGE Valid code : Blank-xx.x FT.	2.0 FT
3	53-54	PRESS	F2.0	MAXIMUM SOIL EQUIVALENT FLUID PRESSURE For lateral earth pressure Valid code : Blank-xx PCF	30 PCF
3	55-56	PMIN	F2.0	MINIMUM SOIL EQUIVALENT FLUID PRESSURE For checking positive moment Valid code : Blank-xx PCF	15 PCF
3	57-59	PWAT	F3.1	WATER WEIGHT Valid code : 62.4 PCF -1 : No water pressure	62.4
3	60-62	TFILT	F3.1	TOP HAUNCH Valid code Blank-xx.x IN. : 2 IN. -1.0 : Zero top haunch	2.0 IN
3	63-65	BFILT	F3.1	BOTTOM HAUNCH Valid code Blank-xx.x IN. : 2 IN. -1.0 : Zero top haunch	2.0 IN
3	66	KHACH	A1	HAUNCH CONSIDERATION Valid code : Haunch not to be considered X : Haunch to be considered by 1983 AASHTO 8.8	BLANK
3	67	KHWAL	A1	HEADWALL ELIMINATION BLANK Valid code : Eliminate no headwall B : Eliminate both headwall L : Eliminate left headwall R : Eliminate right headwall	BLANK
3	68-79	COMS	A12	COMMENTS Valid code : Free comments	
3	80	ITEST	I1	SPECIAL PRINTOUT Not normally used. strictly for testing purpose Valid code 1 : Print DL, SP, WP and LL moments and shears : No off	

Card Four

CARD NUMBER	CARD COLUMN	VARIABLE NAME	FORMAT	DESCRIPTION	DEFAULT VALUE
4	1	KFOR	I1	CARD NO. 4 Valid code : 4	4
4	2-3	NCARD	I2	CULVERT NUMBER Identify each culvert with a unique number Valid code : 1-99	NA
4	4	MINKEY	I1	MINIMUM OUTPUT KEY : Minimum output Leave it blank, 0 or 1 to turn off all output except what is required for Florida Roadway Design Standards 1 : Minimum output 2 : Detailed output	BLANK
4	5	WINGTY	I1	WINGWALL TYPE Valid code : Straight wingwall which aligns with the headwall 1 : Straight wingwall same as BLANK 2 : Skewed wingwall which points to different azimuth angle from culvert headwall skew angle	BLANK
4	6-8	WLSKEF	I3	LEFT FRONT WINGWALL SKEW ANGLE Measured from line perpendicular to center line of culvert in clockwise direction to wingwall face Valid code : 0-45 degree 225-360 degree BLANK : Wingwall parallel to the headwall	LSKE
4	9-11	WLSKEB	I3	LEFT BACK WINGWALL SKEW ANGLE Measured from line perpendicular to center line of culvert in clockwise direction to wingwall face Valid code : 135-315 degree BLANK : Wingwall parallel to the headwall	LSKE

Card Four (Continued)

CARD NUMBER	CARD COLUMN	VARIABLE NAME	FORMAT	DESCRIPTION	DEFAULT VALUE
4	12-14	WRSKEF	I3	RIGHT FRONT WINGWALL SKEW ANGLE Measured from line perpendicular to center line of culvert in clockwise direction to wingwall face Valid code : 0-135 degree 315-360 degree BLANK : Wingwall parallel to the headwall	RSKE
4	15-17	WRSKEB	I3	RIGHT BACK WINGWALL SKEW ANGLE Measured from line perpendicular to center line of culvert in clockwise direction to wingwall face Valid code : 45-225 degree BLANK : Wingwall parallel to the headwall	RSKE
4	18-21	WSKLF	F4.2	LEFT FRONT WINGWALL LENGTH Overrides calculated wingwall length, if length is specified, the wingwall front tip length will be identical to the height at joint of wingwall & culvert Valid code : 0.00-99.99 FT. BLANK : Calculated length	
4	22-25	WSKLB	F4.2	LEFT BACK WINGWALL LENGTH Overrides calculated wingwall length, if length is specified the wingwall front tip length will be identical to the height at joint of wingwall & culvert Valid code : 0.00-99.99 FT. BLANK : Calculated length	
4	26-29	WSKRF	F4.2	RIGHT FRONT WINGWALL LENGTH Overrides calculated wingwall length, if length is specified the wingwall front tip length will be identical to the height at joint of wingwall & culvert Valid code : 0.00-99.99 FT. BLANK : Calculated length	
4	30-33	WSKRB	F4.2	RIGHT BACK WINGWALL LENGTH Overrides calculated wingwall length, if length is specified the wingwall front tip length will be identical to the height at joint of wingwall & culvert Valid code : 0.00-99.99 FT. BLANK : Calculated length	

Card Four (Continued)

CARD NUMBER	CARD COLUMN	VARIABLE NAME	FORMAT	DESCRIPTION	DEFAULT VALUE
4	34	CULEXT	I1	CULVERT EXTENSION A calculated tie-in length will be excluded from the new culvert bottom slab at each side which is connected to the existing culvert Valid code : New culvert with left and right wingwalls (BOTH) 1 : New culvert with left and right wingwalls (BOTH) 2 : New culvert extends from left side of existig culvert with left wingwall only (LEFT) 3 : New culvert extends from right side of existig culvert with right wingwall only (RIGH) 4 : New culvert connects existing culverts with no wingwall (NONE)	BLANK
4	35	NOHEAD	I1	NUMBER OF HEADWALL Valid code : Left and right headwalls (BOTH) 1 : Left and right headwalls (BOTH) 2 : Left headwall only (LEFT) 3 : Right headwall only (RIGH) 4 : No headwall (NONE)	BLANK
4	36-37	WWCOVS	F2.1	COVER FOR OUTSIDE FACE OF WALL Slightly aggressive environment Moderately/Extremely aggressive environment Valid code : Blank-x.xx INCH	2.5 IN 3.5 IN
4	38-39	ALLCOV	F2.1	ALL OTHER FACES CONCRETE COVER Slightly aggressive environment Moderately/Extremely aggressive environment Valid code : Blank-x.xx INCH	2.5 IN 3.5 IN
4	40-49	PROJNO	A10	PROJECT NUMBER Valid code : Free format	
4	50-80	LOCSTA	A47	LOCATION & IDENTIFICATION Valid code : Free format	

OUTPUT DATA

Three categories of output are available from this program:

The first category is the Standard Box Culvert and Wingwall Design Output which may be incorporated into the Florida Department of Transportation Roadway and Traffic Design Standards Indexes 280 and 290 to produce a complete design.

The second category is the Special Output which tabulates shear and moment generated by dead load, live load, soil and water at tenth point of each member.

The third category is the Detailed Output which tabulates shear stress at critical sections and reinforcing bar splice lengths.

Combinations of these three output categories may be generated by triggering either one or both of the Special Print and Minimum keys.

The output data has the following reports:

1. Input Data Reflection

The first page of every output is an echo of input and default data. The user can verify this page with his coded input form to detect and correct any discrepancy. **The concrete covers coded and echoed on this page are the dimensions measured from the center of bar to the face of concrete.**

2. Standard Output:

2.1 The first part of this output provides a detailed description of material properties, box culvert and wingwall geometry, calculated design dimensions and concrete quantities. **The concrete covers on this page are the dimensions measured from the face of reinforcing bars to the face of concrete and have the following default values;**

Slightly aggressive environment	:	2 in.
Moderately aggressive environment	:	3 in.
Extremely aggressive environment	:	3 in.

The valid range of headwall and wingwall skew angles is detailed on Sheet 1 of 5 of Index 290. Based on the wingwall skew angle and drainage considerations, the length, height and front tip height of each wingwall are calculated from the equation in Figure 10 on page 16. If all wingwall lengths and front tip heights are identical, a condensed output will automatically be created. Two sample input coding forms and output reports are shown on Pages 38 through 53.

The total wingwall length with barrel width tabulated on the output is the sum of the front wingwall length, barrel width and back wingwall length.

The Pour 1 barrel concrete quantity is the sum of the bottom slab, the bottom haunch and the 2 in. height of exterior and interior walls cast with the bottom slab.

2.2 The second part of this output tabulates the reinforcing bar mark, number, set, size, spacing, type, length, weight and total

quantities. The mark and type of the reinforcing bars are directly cross-referenced with Index 290.

The column heading of **SET** is derived from dividing the individual total designed reinforcing bar length by the standard 40 ft. stock length.

In the case of a box culvert extension, the C3 bar will replace the C1 bar in the bottom slab to accomodate the reduced length of the new box culvert bottom slab which will be tied to the existing box culvert bottom slab.

3. Special Output:

The following are column headings and definitions of the Special Output:

3.1 Service Load Design

3.1.1 Moment: Maximum design moment at the critical section, in kip-ft

3.1.2 Axial Force: Axial design load corresponding with maximum moment at the same section in kips.

3.1.3 Shear: Maximum design shear force at the critical section, in kips.

3.1.4 Concrete Stress: Concrete compressive stress due to design moment and axial force, in psi.

3.1.5 Shear Stress: Shear stress at the section, in psi

3.1.6 As: Required area of steel reinforcement, in square inches.

3.1.7 VA: Allowable shear stress, in psi.

3.1.8 FCA: Allowable concrete compressive stress, in psi.

3.2 Load Factor Design

3.2.1 Moment: Maximum load factor design moment at the critical section, in kip-ft.

3.2.2 Axial Force: Axial design load corresponding with maximum moment at same section, in kips.

3.2.3 Shear: Maximum load factor design shear force at the critical section, in kips.

3.2.4 PO: Axial design load strength of the section in pure compression, in kips

3.2.5 MU: Design moment strength of the section (pure flexure), in kip-ft.

3.2.6 MB: Design moment strength of the section when assumed ultimate strain of concrete and yielding of tension reinforcement occurs simultaneously (balance conditions), in kip-ft.

3.2.7 PB: Axial design load strength of the section when assumed ultimate strain of concrete and yielding of tension reinforcement occurs simultaneously (balance conditions), in kips.

3.2.8 As: Required area of tension reinforcement, in square inches

3.2.9 Shear Stress: Shear stress at the section, in ksi

3.2.10 MA: Allowable moment strength of a section under axial design load condition, in kip-ft.

3.2.11 VA: Allowable shear stress in psi

4 Detailed Output:

In either the Service Load or the Load Factor design, the moments, forces, stresses, etc. are given for each critical section of each member as listed below:

M: Member identification number.

T: Thickness of that member, in inches.

Lt End: At bottom for wall, at the left end of the slab

Rt End: At top for wall, at the right end of the slab.

Mid Span: At 0.4, 0.5, 0.6 of the span, from left to right, whichever is the greatest.

5. Bar Design

This part of output is used for the North Carolina Department of Transportation Standard and is printed for output verification between the North Carolina and Florida versions.

Corner Bar (T): Corner at top slab, A1.

Corner Bar (B): Corner at bottom slab, A2

TSLAB+: Top slab bottom bar, A100.

TSLAB-: Top slab top bar, A300

BSLAB+: Bottom slab top bar, A200

BSLAB-: Bottom slab bottom bar, A300

EXTIN: Exterior wall inside bar, B1

EXTOUT: Exterior wall outside bar, B2.

INTWL: Interior wall bar, B3.

C1: Longitudinal bar, C1.

6. Bar Schedule.

7. Moment, shear, axial force at tenth points. (option)

8. Influence Line (option): This is an extensive printout, and should only be requested when necessary.

9. Member reference

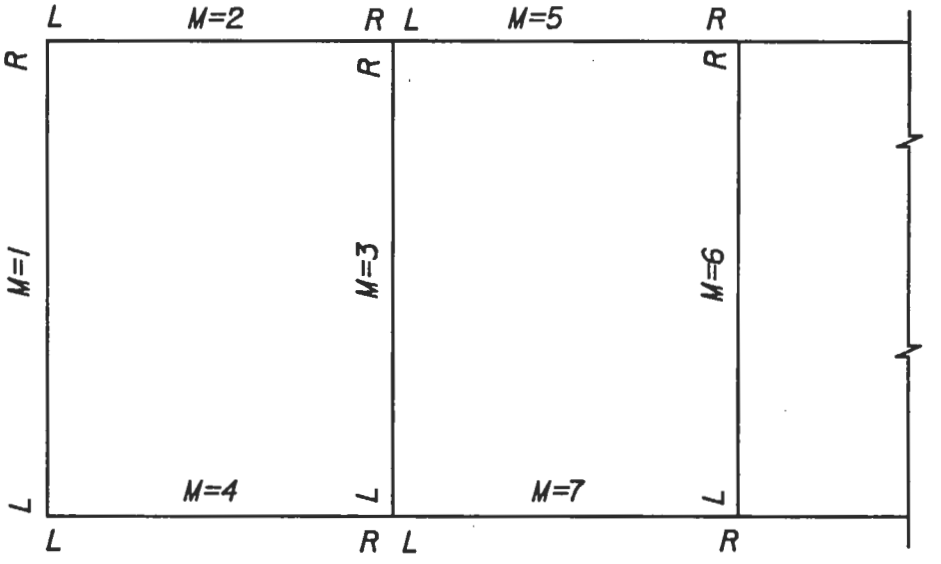

M: Member; L: Lt. End; R: Rt. End

Fig. 13 Member Reference Diagram

BAR SCHEDULE

Normally, the bar schedule is printed with the design option but may be omitted with the analysis option. The user must refer to the Florida DOT Roadway and Traffic Design Standards Index No. 290 to determine the exact location of bars.

'A1': Top corner bars

'A2': Bottom corner bars.

'A100': Top slab positive (main bars)

'A101' to 'A150': Top slab positive, left side cut bars

* 'A151' to 'A199' Top slab positive, right side cut bars

'A200': Bottom slab positive, (main bar

'A201' to 'A250': Bottom slab positive, left side cut bars

* 'A251' to 'A299': Bottom slab positive, right side cut bars.

'A300': Top slab negative (main bars).

'A301' to 'A350': Top slab negative, left side cut bars

'A351' to 'A399': Top slab negative, right side cut bars.

'A400': Bottom slab negative (main bars)

'A401' to 'A450': Bottom slab negative, left side cut bars.

'A451' to 'A499': Bottom slab negative, right side cut bars.

'B1': Exterior wall inside bars

'B2': Exterior wall outside bars, from construction joint to construction joint.

'B3': Interior wall bars

'C1': Longitudinal bars (Florida Standard)

'C2': Top slab bars

'C3': Longitudinal bars replace C1 at bottom of slab when a new culvert is extended from an existing culvert.

'G1': Left side head wall bars, (Florida Standard)

* 'G2': Right side head wall bars, (N. C. Standard).

'S2': Left side end bars, (N. C. Standard)

* 'S3': Right side end bars, (N. C. Standard).

* If Left and Right skew angles are the same, the computer output will combine left and right bars.

Bar sizes range from #4 to #11 and spacings from 4" to 18". Bars A1, A2, A300, A400 and B2 have the same spacing and the requirement for Class "C" tension lap splices applies.

For a single box with a span less than 5 feet, the corner bar will be a "U-Shaped" bar.

Bar Types

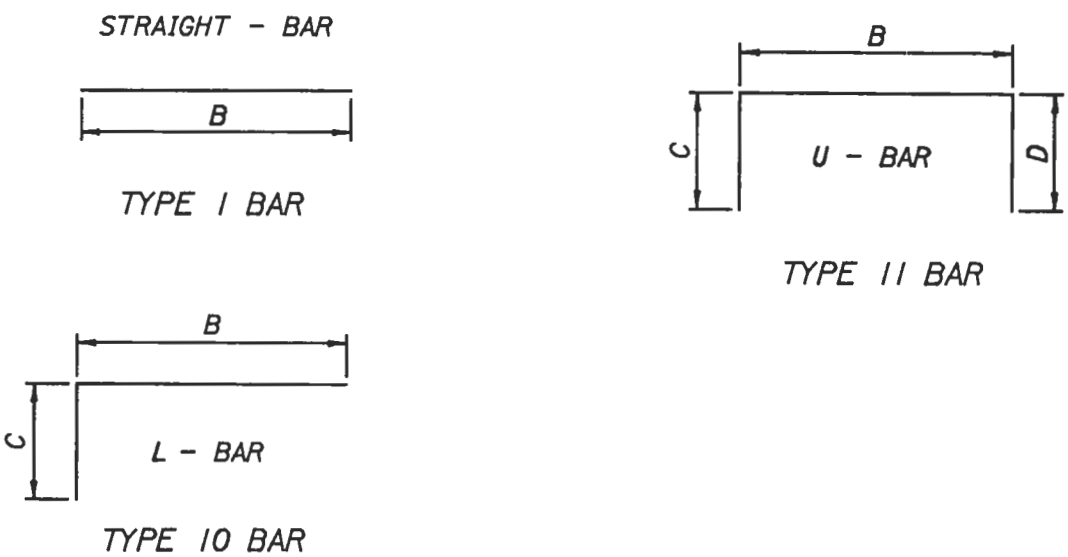

Fig. 14 Bar Type Diagram

B: Horizontal dimension (slab)
C: Vertical dimension (wall)
D: Vertical dimension (wall)

There are no 'B2' bars if the clear height is less than 6 feet as the corner bars will overlap.

Refer to the Florida Department of Transportation Roadway and Traffic Design Standards Index No. 290, Sheet 1 of 5 for bar splice details.

EXAMPLES

Depending upon the desired output, input data can be divided into two categories. The first category is the mandatory input data to develop the output for the design of standard highway box culverts and wingwalls. The second category is the input data required for a special design or structural analysis. The data in the second category can all be changed from preselected defualt values to special values required by user to perform detailed special design or analysis.

The first category of mandatory input is described on Page 38; i.e., the Short Coding Form. The complete input data which includes the mandatory and special input data is described on Page 43; i.e., the Long Coding Form.

The input requirements of both coding forms are defined in Table-1. Cards 1 and 2 should be omitted if default values are selected.

Example Problems:

A new reinforced concrete box culvert is required at station 220 + 36 of US 90 to satisfy the following requirements:

Environment condition----------Slightly aggressive
Number of barrels----------1
Clear span----------8 ft.
Clear height----------6 ft.
Design fill (distance from finish grade at roadway
centerline to bottom of top slab)----------4 ft.
Length of box culvert (along the centerline)----------200 ft.
Skew angle of left headwall----------15 degree
Skew angle of right headwall----------20 degree
Skewed wingwall angle
Left front----------350 degree
Left back----------200 degree
Right front---------- 60 degree
Right back---------- 80 degree
Project number----------55030-3418
Location----------Leon county, US 90, Station 220 + 36

Based on this data, a standard coding form is prepared and shown on Page 38.

FLORIDA DEPARTMENT OF TRANSPORTATION BOX CULVERT AND WINGWALL DESIGN

1	ENVIRONMENT
1	73
1	

PROGRAM NAME: PSTDSN55 (VERSION 2.3) 7-31-92

CODING INSTRUCTIONS :

1. CODE CARDS 3 AND 4 FOR EACH CULVERT DESIGN AND DO NOT PLACE ZEROS IN ANY COLUMN IF IT IS NOT A SIGNIFICANT DIGIT.
2. WHEN FIXED VALUES ARE DESIRED FOR SLAB AND WALL THICKNESS (AS IN MUTIPLE BOWLVERT EXTENSIONS), THICKNESS VALUES CODED IN COLUMN 30 THROUGH 49 OF CARD 3 MUST BE FOLLOWED BY AN 'F' IN THE APPROPRIATE COLUMN.
3. IF ENVIRONMENT CONDITION IS SLIGHTLY AGGRESSIVE, CARD 1 CAN BE OMITTED.
4. CARD 4 COLUMN 34, CULVERT EXTENSION, CODE 2 FOR LEFT EXTENSION, 3 FOR RIGHT EXTENSION, 4 FOR CONNECTING EXISTING CULVERTS.

3	CULVERT NO.	NO. OF BOXES	CLEAR SPAN (FT)	CLEAR HEIGHT (FT)	DESIGN FILL (FROM BOTTOM OF TOP SLAB) (FT)	LENGTH ALONG CENTERLINE (FT)	SKEW ANGLES LEFT	SKEW ANGLES RIGHT	NO FLOOR=3,X	TOP SLAB THICKNESS (9.0 IN.)	TOP SLAB Fixed	BOTTOM SLAB THICKNESS (9.0 IN.)	BOTTOM SLAB Fixed	EXT. WALL THICKNESS (9.0 IN.)	EXT. WALL Fixed	INT. WALL THICKNESS (9.0 IN.)	INT. WALL Fixed
3		1	8	6	4	200	15	20									

4	CULVERT NO.	MIRRAN KEY	WINGWALL TYPE	WINGWALL SKEW ANGLE LEFT FRONT	WINGWALL SKEW ANGLE LEFT BACK	WINGWALL SKEW ANGLE RIGHT FRONT	WINGWALL SKEW ANGLE RIGHT BACK	WINGWALL SKEW LENGTH LEFT FRONT	WINGWALL SKEW LENGTH LEFT BACK	WINGWALL SKEW LENGTH RIGHT FRONT	WINGWALL SKEW LENGTH RIGHT BACK	CULVERT EXTENSION	NO. OF HEADWALLS	W. W. FRONT FACE COVER	W. W. OTHER FACE COVER	PROJECT NUMBER	LOCATION
4			2	350	200	60	80									55030-3418	LEON COUNTY US 90 STA. 220+36

Standard Input

```
3  1 8   6    4  200   15 20
4   2350200 60 80                    55030-3418LEON COUNTY US 90 STA. 220+36
```

Standard Output

```
PSTDSN55 VERSION (2.3                    FLORIDA DEPARTMENT OF TRANSPORTATION                    PAGE   1
                                          BOX CULVERT AND WINGWALL DESIGN                    VERSION NO. 2.3

*****
CULV *  TYPE  * SPAN * HEIGHT * FILL * LENGTH * LSKEW * RSKEW * FLOOR *

3- 0  SINGLE     8.00    6.00    4.00  200.00     15      20     FULL
.
    * TOP  * BOT. * EXT. * INT. * L.LOAD * SOIL PRESS * WATER *   HAUNCH  *
    * SLAB * SLAB * WALL * WALL * SURCHG * MAX.  MIN  * PRESS * TOP * BOT *

      0.00   0.00   0.00   0.00    2.00    30.   15.    62.4    2.0   0.0

*****
WING * MIN. * WINGWALL *WSKEWL *WSKEWL *WSKEWR *WSKEWR * WLENGL * WLENGL * WLENGR * WLENGR *
WALL  OUTPUT    TYPE     FRONT   BACK    FRONT   BACK     FRONT    BACK     FRONT    BACK

4- 0    YES     SKEW       350     200      60      80     0.00     0.00     0.00     0.00

     *FFACE *   OTHER   * CUL. * NO. OF   *
      COVER     COVER     EXT.   HEADWALL

      2.50      2.50     BOTH     BOTH
```

```
02/09/93                          FLORIDA DEPARTMENT OF TRANSPORTATION                                  11:06:27

                                    BOX CULVERT AND WINGWALL DESIGN                                  VERSION NO. 2.30

PROJECT NUMBER   55030-3418          LOCATION DESCRIPTION : LEON COUNTY US 90 STA. 220+36
                                     ENVIRONMENT          : SLIGHTLY AGGRESSIVE, USE CLASS II CONCRETE


MATERIAL PROPERTIES                    CONCRETE COVER FOR REINFORCING BARS
-------------------                    -----------------------------------

  STEEL YIELD STRENGTH  = 60000. PSI   BARREL EXT. COVER: TOP SL.=          2 IN; BOT. SL.=          2 IN;WALL=          2 IN
  CONCRETE 28 DAY STREN.=  3400. PSI   BARREL INT. COVER:ALL LOC.=          2 IN
  DESIGN F'C            =  3400. PSI   WINGWALL         :ALL LOC.=          2 IN

PROPERTIES OF ELEMENTS
----------------------

  BARREL  :NO. OF BARREL(S) =  1;  SPAN=  8 FT      0 IN;                HEIGHT =  6 FT      0 IN;DEPTH OF FILL =  4 FT      0 IN
           LENGTH AT BOX CENTER LINE   =200 FT      0 IN;        LEFT SIDE SKEW ANGLE =   15 DEGREE;       WIDTH =  9 FT     10 IN
                                                               RIGHT SIDE SKEW ANGLE =   20 DEGREE;       WIDTH = 10 FT  1 1/4 IN
           THKNSS.:TOP SL. =            9 IN; BOTTOM SL. =          9 IN;EXT. WALL =          9 IN;  INT. WALL =  0 FT      0 IN

  WINGWALL:NO. OF WINGWALL(S)    BOTH LEFT AND RIGHT SIDES                    NO. OF HEADWALL(S)    BOTH LEFT AND RIGHT SIDES

           TOP BEVEL         =            6 IN;    SIDE BEVEL     =          6 IN;
           WALL HEIGHT       =  7 FT      9 IN;    FOOTING WIDTH  =  5 FT    3 IN;     HEEL DIMENSION    =  3 FT      1 IN;
           TOE DIMENSION     =  1 FT      4 IN;    WALL THICKNESS =         10 IN;     FOOTING THICKNESS =            8 IN;
           TOE PRESSURE      =  1018. LB/SQ.FT.

           LEFT FR. SKEW ANGLE  =  350 DEGREE.; LENGTH  = 14 FT     11 IN* (          1 IN**); FRONT TIP HT. =  7 FT      9 IN;
                         WALL   =   3.511 C.Y.; FOOTING =      2.577 C.Y.;                              TOTAL =      6.088 C.Y.

           LEFT BK. SKEW ANGLE  =  200 DEGREE.; LENGTH  = 16 FT  2 3/4 IN* (      1 3/4 IN**); FRONT TIP HT. =  7 FT      9 IN;
                         WALL   =   3.832 C.Y.; FOOTING =      2.813 C.Y.;                              TOTAL =      6.646 C.Y.

           RIGHT FR. SKEW ANGLE =   60 DEGREE.; LENGTH  = 22 FT  6 1/4 IN* (      8 3/4 IN**); FRONT TIP HT. =  5 FT      8 IN;
                         WALL   =   4.694 C.Y.; FOOTING =      3.995 C.Y.;                              TOTAL =      8.689 C.Y.

           RIGHT BK. SKEW ANGLE =   80 DEGREE.; LENGTH  = 20 FT 10 3/4 IN* (  2 FT  4 1/4 IN**); FRONT TIP HT. =  1 FT      6 IN;
                         WALL   =   3.199 C.Y.; FOOTING =      3.995 C.Y.;                              TOTAL =      7.194 C.Y.

           TOTAL WINGWALL LENGTH WITH BARREL WIDTH :     LEFT    =       41 FT  2 1/2 IN;      RIGHT  =       56 FT  7 1/4 IN

CONCRETE QUANTITIES
-------------------

  BARREL  :  POUR 1 (BOTTOM SLAB)  =  0.273 C.Y /FT.;    POUR 2 (WALLS)  =  0.315 C.Y./FT.;     POUR 3 (TOP SLAB)  =  0.274 C.Y./FT.
             POUR 4 (HEADWALL(S))  =  0.923 C.Y                                          TOTAL (EXCLUDE HEADWALL)  =  0.862 C.Y./FT.

  WINGWALL:  POUR 1 (FOOTING***)   =     14.775 C.Y.;    POUR 2 (WALLS)  =     15.236 C.Y.;                 TOTAL =     30.012 C.Y.

TOTAL CONCRETE QUANTITIES
-------------------------

             BARREL                =    173.351 C.Y.;    WINGWALL        =     30.012 C.Y.;                 TOTAL =    203.363 C.Y.

  * SKEWED WINGWALL LENGTH MEASURED ON CENTER LINE FROM CONSTRUCTION JOINT
 ** DISTANCE FROM OUTSIDE EDGE OF BARREL EXTERIOR WALL TO CONSTRUCTION JOINT ON CENTER LINE OF WINGWALL
*** INCLUDE TOE AND KEY AT BARREL ENDS
```

PROJECT NUMBER 55030-3418

LOCATION DESCRIPTION : LEON COUNTY US 90 STA. 220+36
ENVIRONMENT : SLIGHTLY AGGRESSIVE, USE CLASS II CONCRETE

STEEL QUANTITIES AND BAR SCHEDULE

BARREL QUANTITIES:

LOCATION	BAR	NUMBER	SETS	SIZE	SPACING (FT-IN)	TYPE	LENGTH (FT-IN)	WEIGHT (LB)	B LENGTH (FT-IN)	C LENGTH (FT-IN)	D LENGTH (FT-IN)
TOP SLAB	A100	316		5	0- 7 1/2	1	9- 2	3021			
TOP SLAB LEFT SIDE	A101	2		5	0- 7 1/2	1	4- 0	8			
TOP SLAB RIGHT SIDE	A151	2		5	0- 7 1/2	1	5- 4	11			
BOT SLAB	A200	364		5	0- 6 1/2	1	9- 2	3480			
BOT SLAB LEFT SIDE	A201	2		5	0- 6 1/2	1	4- 7	10			
BOT SLAB RIGHT SIDE	A251	2		5	0- 6 1/2	1	5-10	12			
	A252	2		5	0- 6 1/2	1	2-10	6			
CORNER (TOP)	A1	534		4	0- 9	10	4-11	1754	2- 3	2- 8	
CORNER (BOTTOM)	A2	534		4	0- 9	10	4-11	1754	2- 3	2- 8	
EXTERIOR WALL (INSIDE)	B1	534		4	0- 9	1	7- 2	2556			
EXTERIOR WALL (OUTSIDE)	B2	534		4	0- 9	1	5- 2	1843			
LONGITUDINAL	C1	216	(6)	4	1- 6	1	34- 8	5002			
HEADWALL LEFT SIDE	G1	2	(1)	4	SEE INDEX	1	9- 5	13			
HEADWALL RIGHT SIDE	G2	2	(1)	4	SEE INDEX	1	9- 9	13			
HEADWALL BOTH SIDES	P	21		4	1- 0	11	3- 5	48	0-11	1- 5	1- 1
SLAB ENDS LEFT SIDE	S2	6	(1)	8	SEE INDEX	1	9- 5	151			
SLAB ENDS RIGHT SIDE	S3	6	(1)	8	SEE INDEX	1	9- 9	156			

PER FOOT BARREL STEEL QUANTITY 96. LBS./FOOT
TOTAL BARREL STEEL QUANTITY 19838 LBS.

WINGWALL QUANTITIES:

LOCATION	BAR	NUMBER SETS	SIZE	SPACING (FT-IN)	TYPE	LENGTH (FT-IN)	WEIGHT (LB)	B LENGTH (FT-IN)	C LENGTH (FT-IN)
STEM-LEFT FRONT	F1	10	5	1- 5 1/2	10	9-10	103	1- 9	8- 1
STEM-LEFT BACK	F2	12	5	1- 5 1/2	10	9-10	123	1- 9	8- 1
STEM-RIGHT FRONT	F3	8 *	5	1- 5 1/2	10	17- 7 *	147	1- 9 *	8- 1 *
STEM-RIGHT BACK	F4	7 *	5	1- 5 1/2	10	13- 5 *	98	1- 9 *	8- 1 *
STEM-LEFT FRONT	J1	10	4	1- 5 1/2	1	8- 1	54		
STEM-LEFT BACK	J2	12	4	1- 5 1/2	1	8- 1	65		
STEM-RIGHT FRONT	J3	8 *	4	1- 5 1/2	1	14- 1 *	75		
STEM-RIGHT BACK	J4	7 *	4	1- 5 1/2	1	9-11 *	46		
STEM - LEFT FRONT	K1	10	4	1- 6	1	14- 7	97		
STEM - LEFT BACK	K2	10	4	1- 6	1	15-10	106		
STEM - RIGHT FRONT	K3	4 *	4	1- 6	1	22- 2 *	59		
STEM - RIGHT BACK	K4	3 *	4	1- 6	1	20- 6 *	41		
FOOTING - LEFT FRONT	FK1	4	4	SEE INDEX	1	14- 7	39		
FOOTING - LEFT BACK	FK2	4	4	SEE INDEX	1	15-10	42		
FOOTING - RIGHT FRONT	FK3	4	4	SEE INDEX	1	22- 2	59		
FOOTING - RIGHT BACK	FK4	4	4	SEE INDEX	1	20- 6	55		
FOOTING-LEFT FRONT	L1	11	4	1- 5 1/2	1	4-10	36		
FOOTING-LEFT BACK	L2	12	4	1- 5 1/2	1	4-10	39		
FOOTING-RIGHT FRONT	L3	16	4	1- 5 1/2	1	4-10	52		
FOOTING-RIGHT BACK	L4	15	4	1- 5 1/2	1	4-10	48		
FOOTING LEFT SIDE	M1	2 (1)	4	SEE INDEX	1	40-10	55		
FOOTING RIGHT SIDE	M2	4 (2)	4	SEE INDEX	1	28-11	77		
STEM TO BARREL DOWELS	N **	32	6	1- 0	10	6- 0	288	3- 0	3- 0
FOOTING SPILLWAY	R	20	4	1- 0	1	2- 7	35		

PER FOOT WINGWALL STEEL QUANTITY 25. LBS./FOOT
TOTAL WINGWALL STEEL QUANTITY 1839 LBS.

* LENGTH IS THE SUM OF BAR LENGTH AT BEGINNING/TOP AND ENDING/BOTTOM OF WINGWALL, NUMBER OF BAR IS THE AMOUNT REQUIRED FOR THIS SUMMATION OF LENGTH. B AND C LENGTH IS FOR THE FIRST BAR OF WINGWALL CLOSE TO THE JOINT OF WINGWALL AND BARREL.

* FOR SKEWED WINGS BEND BARS N TO ACCOMMODATE SKEW, PROVIDE FOR 3 FT. OF BAR IN THE WINGWALL AND HEADWALL.

TOTAL STEEL QUANTITIES

BARREL	19838 LBS.
WINGWALL	1839 LBS.
TOTAL	21677 LBS.

FLORIDA DEPARTMENT OF TRANSPORTATION BOX CULVERT AND WINGWALL DESIGN

PROGRAM NAME: PSTDSN55 (VERSION 2.3) 7-31-92

*	RUN	NAME FIRST	NAME LAST	PHONE	FREE STYLE HEADING
*					

1	REG. LIVE LOAD CODE *	OMIT 3 W	@ FILL	OVERLOAD STANDARD AXLE WEIGHT (LB.)	SERVICE/LOAD FACT	10TH POINT M & S	INFLU. LINE	POSITION OF DESIGN NEGATIVE MOMENT	SOIL WEIGHT (120) (PCF)	REINF. YIELD STR. (60,000) (PSI)	ALLOWABLE STEEL STRESS (24,000) (PSI)	COMPR. STR. OF CONC. (3400) (PSI)	ALLOWABLE CONC. SHEAR STRESS	ALLOW. CONC. SHEAR STRESS WITH STIRRUP	THICKNESS INCREMENT SLAB (0.5IN)	THICKNESS INCREMENT WALL (0.5IN)	CONCRETE COVER EXTERIOR TOP SLAB	CONCRETE COVER EXTERIOR BOTT. SLAB	CONCRETE COVER EXTERIOR WALL SLAB	CONCRETE COVER INTERIOR	SAME SLAB	SAME WALL	BAR SCHEDULE	BAR SPACING MAX. (18 IN)	BAR SPACING MIN. (4 IN)	BAR SIZE MAX. =11	BAR SIZE MIN. =4	N= 9.0	ENVIRONMENT
1						1	1																					

#	CODE
1	HS20
2	H 20
3	HS15
4	H 15
5	HS10
6	H 10
8	SPCL
9	NONE

2	EXTRA UNIFORM LOAD (K/FT)	EXTRA CONCENTRATE LOAD LOAD NO. 1 WEIGHT (KIP)	LOAD NO. 1 POSITION (FT)	LOAD NO. 2 WEIGHT (KIP)	LOAD NO. 2 POSITION (FT)	LOAD NO. 3 WEIGHT (KIP)	LOAD NO. 3 POSITION (FT)	SPL ALT. LIVE LOAD WHEEL LOAD (KIP)	EARTH FILL ABOVE SLAB (FT)	OVER-STRESS FACTOR (1.0)
2										

P	(0.002) MAX. STEEL RATIO $P = \frac{As}{bd}$

3	CULVERT NO.	NO. OF BOXES	CLEAR SPAN (FT)	CLEAR HEIGHT (FT)	DESIGN FILL (FROM BOTTOM OF TOP SLAB) (FT)	LENGTH ALONG CENTERLINE (FT)	SKEW ANGLES LEFT	SKEW ANGLES RIGHT	NO FLOOR=X,H	TOP SLAB THICKNESS (9.0 IN.)	TOP SLAB FIX=F	BOTTOM SLAB THICKNESS (9.0 IN.)	BOTTOM SLAB FIX=F	EXT. WALL THICKNESS (9.0 IN.)	EXT. WALL FIX=F	INT. WALL THICKNESS (9.0 IN.)	INT. WALL FIX=F	LIVE LOAD SURCHARGE (2.0 FT.)	SOIL PRES. MAXIMUM (50 PCF)	SOIL PRES. MINIMUM (15 PCF)	WATER PRESSURE (62.4 CPF)	HAUNCH TOP (IN.) (2.0)	HAUNCH BOTT. (IN.) (0.0)	HAUNCH	COMMENTS	SPECIAL PRINT
3		1	8	6		4	20	0		15	20															1

4	CULVERT NO.	MINIMUM HEY	WINGWALL TYPE	WINGWALL SKEW ANGLE LEFT FRONT	WINGWALL SKEW ANGLE LEFT BACK	WINGWALL SKEW ANGLE RIGHT FRONT	WINGWALL SKEW ANGLE RIGHT BACK	WINGWALL SKEW LENGTH LEFT FRONT	WINGWALL SKEW LENGTH LEFT BACK	WINGWALL SKEW LENGTH RIGHT FRONT	WINGWALL SKEW LENGTH RIGHT BACK	CULVERT EXTENSION	NO. OF HEADWALLS	W. W. FRONT FACE COVER	W. W. OTHER FACE COVER	PROJECT NUMBER	LOCATION
4		22	3	50	20	0	60	80								5503	0 3418 LEON COUNTY US 90 STA. 2209+36

Special and Detailed Input

```
 1 8   6    4  200   15 20
 22350200 60 80                    55030-3418LEON COUNTY US 90 STA. 220+36
```

Special and Detailed Output

```
1PSTDSN55 VERSION (2.3                    FLORIDA DEPARTMENT OF TRANSPORTATION                    PAGE
                                            BOX CULVERT AND WINGWALL DESIGN                   VERSION NO. 2.3

 CARD *     REG. LIVE LOAD      * SERVICE *  LOAD  *  10TH  * INF. * LOC.NEG
  NO. * CODE OMIT 0-FILL OVERLD *   LOAD  * FACTOR * MOMENT * LINE *  MOMENT

 1- 1   HS20  NO    NO        0.     NO       YES      YES    YES      1.00
 .
       * SOIL * STEEL * STEEL * CONCRETE * SHEAR *  SHEAR  * THICK INC. *
       *  WT. *   FY  *   FS  * STRENGTH * CNCRT * STIRRUP * SLAB  WALL *

          120.   60000.   24000.   3400.      0.       0.     0.50  0.50
 .
     * EXTERIOR COVER *  INT. * SAME THICK * BAR * BAR SPCG * BAR SIZ *   *
     * T.SB B.SB WALL * COVER * SLAB  WALL * TBL * MAX  MIN * MAX MIN * N * ENVIR *

       2.50 2.50 2.50    2.50   NO    NO     YES  18.0  4.0    11   4  9.0    1

 CARD * EXTRA  *    EXTRA  CONCENTRETE  LOAD    * SPL. ATL. LIVE LOAD *
  NO. * U.LOAD * WT.   X1   WT.   X2   WT.   X3 * WHEEL   FILL FACTOR *

 2- 1   0.000   0.000  0.00 0.00  0.00 0.00  0.00 0.00     0.000  1.00

 *****
 CULV *  TYPE  * SPAN * HEIGHT * FILL * LENGTH * LSKEW * RSKEW * FLOOR *

 3- 0  SINGLE     8.00    6.00    4.00  200.00     15      20     FULL
 .
     * TOP  * BOT. * EXT. * INT. * L.LOAD * SOIL PRESS * WATER *   HAUNCH  *
     * SLAB * SLAB * WALL * WALL * SURCHG * MAX.  MIN  * PRESS * TOP * BOT *

       0.00   0.00   0.00   0.00    2.00    30.   15.    62.4    2.0   0.0

 *****
 WING * MIN. * WINGWALL *WSKEWL *WSKEWL *WSKEWR *WSKEWR * WLENGL * WLENGL * WLENGR * WLENGR *
 WALL  OUTPUT    TYPE     FRONT   BACK    FRONT   BACK     FRONT    BACK     FRONT    BACK

 4- 0    NO      SKEW       350     200      60      80     0.00     0.00     0.00     0.00

      *FFACE *   OTHER   * CUL. * NO. OF   *
       COVER     COVER     EXT.   HEADWALL

        2.50      2.50     BOTH     BOTH
```

J= 2 TOP= 9.00 BOT= 9.00 WAL= 9.00 IWAL= 0.00 S= 8.75 H= 6.75 F= 3.25 WT= 502.50 WC=173.57 SP1=0.17 P2=0.20

M	NN	M(D)	M(S)	M(W)	+M(L)	-M(L)	V(D)	V(S)	V(W)	+V(L)	-V(L)
1	1	-2.561	-0.461	0.336	0.000	-1.855	0.130	1.029	-0.850	0.001	-0.080
1	2	-2.474	0.151	-0.155	0.000	-1.854	0.130	0.786	-0.610	0.001	-0.080
1	3	-2.386	0.603	-0.493	0.000	-1.854	0.130	0.556	-0.395	0.001	-0.080
1	4	-2.298	0.904	-0.695	0.000	-1.853	0.130	0.339	-0.206	0.001	-0.080
1	5	-2.210	1.064	-0.777	0.000	-1.852	0.130	0.136	-0.042	0.001	-0.080
1	6	-2.122	1.091	-0.757	0.000	-1.852	0.130	-0.053	0.097	0.001	-0.080
1	7	-2.035	0.996	-0.651	0.000	-1.851	0.130	-0.228	0.211	0.001	-0.080
1	8	-1.947	0.786	-0.477	0.000	-1.850	0.130	-0.390	0.300	0.001	-0.080
1	9	-1.859	0.473	-0.252	0.000	-1.850	0.130	-0.538	0.363	0.001	-0.080
1	10	-1.771	0.063	0.007	0.000	-1.849	0.130	-0.672	0.401	0.001	-0.080
1	11	-1.683	-0.432	0.283	0.000	-1.849	0.130	-0.793	0.413	0.001	-0.080
2	1	-1.683	-0.432	0.283	0.000	-1.851	2.198	0.000	0.000	2.252	0.000
2	2	0.048	-0.432	0.283	0.322	-0.524	1.759	0.000	0.000	1.953	0.000
2	3	1.394	-0.432	0.283	1.418	0.000	1.319	0.000	0.000	1.611	0.000
2	4	2.356	-0.432	0.283	2.328	0.000	0.879	0.000	0.000	1.267	0.000
2	5	2.933	-0.432	0.283	2.881	0.000	0.440	0.000	0.000	0.928	0.000
2	6	3.126	-0.432	0.283	3.078	0.000	0.000	0.000	0.000	0.420	-0.486
2	7	2.933	-0.432	0.283	2.881	0.000	-0.440	0.000	0.000	0.000	-0.767
2	8	2.356	-0.432	0.283	2.328	0.000	-0.879	0.000	0.000	0.000	-1.097
2	9	1.394	-0.432	0.283	1.418	0.000	-1.319	0.000	0.000	0.000	-1.439
2	10	0.048	-0.432	0.283	0.322	-0.524	-1.759	0.000	0.000	0.000	-1.782
2	11	-1.683	-0.432	0.283	0.000	-1.851	-2.198	0.000	0.000	0.000	-2.140
4	1	-2.561	-0.461	0.336	0.000	-1.855	2.958	0.000	0.000	2.252	0.000
4	2	-0.232	-0.461	0.336	0.045	-0.125	2.366	0.000	0.000	1.802	0.000
4	3	1.579	-0.461	0.336	1.298	0.000	1.775	0.000	0.000	1.351	0.000
4	4	2.874	-0.461	0.336	2.283	0.000	1.183	0.000	0.000	0.901	0.000
4	5	3.650	-0.461	0.336	2.875	0.000	0.592	0.000	0.000	0.450	0.000
4	6	3.909	-0.461	0.336	3.072	0.000	0.000	0.000	0.000	0.023	-0.019
4	7	3.650	-0.461	0.336	2.875	0.000	-0.592	0.000	0.000	0.000	-0.450
4	8	2.874	-0.461	0.336	2.283	0.000	-1.183	0.000	0.000	0.000	-0.901
4	9	1.579	-0.461	0.336	1.298	0.000	-1.775	0.000	0.000	0.000	-1.351
4	10	-0.232	-0.461	0.336	0.045	-0.125	-2.366	0.000	0.000	0.000	-1.802
4	11	-2.561	-0.461	0.336	0.000	-1.855	-2.958	0.000	0.000	0.000	-2.252

LOAD FACTOR DESIGN ***** STRESSES AT CRITICAL SECTIONS

***** MAX. AS / B / D = .012

MOMENT	A.F.	SHR	PO	MU	MB	PB	AS	V.S.	MA	V.A.
***** M = 1 T = 9.00				EXT WALL						
LT -7.6	7.7	1.1	237.9	7.6	23.8	77.8	0.27	17.4	9.2	126.0
MID -1.3	2.9	0.3	235.8	6.1	23.4	80.4	0.25	4.2	6.7	126.1
MID- -7.2	7.7	0.3	237.3	7.2	23.7	78.5	0.26	4.2	8.8	125.1
RT -6.5	7.7	0.8	237.1	7.1	23.7	78.7	0.25	13.1	8.7	125.7
***** M = 2 T = 9.00				TOP SLAB						
LT -4.6	0.9	6.5	235.8	6.1	24.8	85.4	0.22	97.4	6.3	134.5
MID 10.8*	-0.2	0.9	242.7	10.8	26.3	76.5	0.39	13.7	10.8	125.8
RT -4.6	0.9	6.5	235.8	6.1	24.8	85.4	0.22	97.4	6.3	134.5
***** M = 4 T = 9.00				BOT SLAB						
LT -5.0	1.4	6.9	236.5	6.7	25.0	84.4	0.24	104.0	7.0	134.2
MID 11.9*	-0.3	0.0	244.3	11.9	26.7	74.4	0.43	0.7	11.8	124.8
RT -5.0	1.4	6.9	236.5	6.7	25.0	84.4	0.24	104.0	7.0	134.2

NOTE: ASTERISK INDICATES DESIGN VALUES EXCEED CRITICAL VALUES

FLORIDA DEPARTMENT OF TRANSPORTATION
STRUCTURES DESIGN OFFICE

CULVERT DESIGN

A CORNER BAR(T)				A CORNER BAR(B)				A TSLAB+		A T LAB-	
H	V	SZ	SPG	H	V	SZ	SPG	SZ	SPG	SZ	SPG
27	32	4	9.0	27	32	4	9.0	5	7.5	0	0.0

A BSLAB+		A BSLAB-		B EXTIN		B EXTOUT		B INTWL		C1
SZ	SPG	SZ	SPG	SZ	SPG	SZ	SPG	SZ	SPG	BARS
5	6.5	0	0.0	4	9.0	4	9.0	0	0.0	36

SPLICE LENGTHS CHART

BAR	SIZE	SPLICE LENGTH
A200	5	1- 8
B1	4	1- 8
C1	4	1-11

```
02/09/93                                FLORIDA DEPARTMENT OF TRANSPORTATION                                10:34:41

                                         BOX CULVERT AND WINGWALL DESIGN                                VERSION NO. 2.30

PROJECT NUMBER : 55030-3418            LOCATION DESCRIPTION : LEON COUNTY US 90 STA. 220+36
                                       ENVIRONMENT          : SLIGHTLY AGGRESSIVE, USE CLASS II CONCRETE


MATERIAL PROPERTIES                      CONCRETE COVER FOR REINFORCING BARS
-------------------                      -----------------------------------

  STEEL YIELD STRENGTH  = 60000. PSI   BARREL EXT. COVER: TOP SL.=          2 IN; BOT. SL.=          2 IN;WALL=          2 IN
  CONCRETE 28 DAY STREN.=  3400. PSI   BARREL INT. COVER:ALL LOC.=          2 IN
  DESIGN F'C            =  3400. PSI   WINGWALL         :ALL LOC.=          2 IN

PROPERTIES OF ELEMENTS
----------------------

  BARREL  :NO. OF BARREL(S) =  1;  SPAN=  8 FT      0 IN;                HEIGHT =  6 FT      0 IN;DEPTH OF FILL =  4 FT      0 IN
           LENGTH AT BOX CENTER LINE   =200 FT      0 IN;        LEFT SIDE SKEW ANGLE =   15 DEGREE;       WIDTH =  9 FT     10 IN
                                                                RIGHT SIDE SKEW ANGLE =   20 DEGREE;       WIDTH = 10 FT  1 1/4 IN
           THKNSS.:TOP SL. =            9 IN; BOTTOM SL. =          9 IN;EXT. WALL =          9 IN;  INT. WALL =  0 FT      0 IN

  WINGWALL:NO. OF WINGWALL(S)    BOTH LEFT AND RIGHT SIDES                    NO. OF HEADWALL(S)    BOTH LEFT AND RIGHT SIDES

           TOP BEVEL         =            6 IN;    SIDE BEVEL     =          6 IN;
           WALL HEIGHT       =  7 FT      9 IN;    FOOTING WIDTH  =  5 FT    3 IN;     HEEL DIMENSION    =  3 FT      1 IN;
           TOE DIMENSION     =  1 FT      4 IN;    WALL THICKNESS =         10 IN;     FOOTING THICKNESS =           8 IN;
           TOE PRESSURE      =  1018. LB/SQ.FT.

           LEFT FR. SKEW ANGLE  =  350 DEGREE.; LENGTH  = 14 FT     11 IN* (          1 IN**); FRONT TIP HT. =  7 FT      9 IN;
                         WALL   =   3.511 C.Y.; FOOTING =      2.577 C.Y.;                                TOTAL =      6.088 C.Y.

           LEFT BK. SKEW ANGLE  =  200 DEGREE.; LENGTH  = 16 FT  2 3/4 IN* (       1 3/4 IN**); FRONT TIP HT. =  7 FT      9 IN;
                         WALL   =   3.832 C.Y.; FOOTING =      2.813 C.Y.;                                TOTAL =      6.646 C.Y.

           RIGHT FR. SKEW ANGLE =   60 DEGREE.; LENGTH  = 22 FT  6 1/4 IN* (       8 3/4 IN**); FRONT TIP HT. =  5 FT      8 IN;
                         WALL   =   4.694 C.Y.; FOOTING =      3.995 C.Y.;                                TOTAL =      8.689 C.Y.

           RIGHT BK. SKEW ANGLE =   80 DEGREE.; LENGTH  = 20 FT 10 3/4 IN* (  2 FT  4 1/4 IN**); FRONT TIP HT. =  1 FT      6 IN;
                         WALL   =   3.199 C.Y.; FOOTING =      3.995 C.Y.;                                TOTAL =      7.194 C.Y.

           TOTAL WINGWALL LENGTH WITH BARREL WIDTH :     LEFT    =       41 FT  2 1/2 IN;      RIGHT  =       56 FT  7 1/4 IN

CONCRETE QUANTITIES
-------------------

  BARREL  :  POUR 1 (BOTTOM SLAB)  =  0.273 C.Y./FT.;    POUR 2 (WALLS)  =  0.315 C.Y./FT.;     POUR 3 (TOP SLAB)  =  0.274 C.Y./FT.
             POUR 4 (HEADWALL(S))  =  0.923 C.Y                                          TOTAL (EXCLUDE HEADWALL)  =  0.862 C.Y./FT.

  WINGWALL:  POUR 1 (FOOTING***)   =     14.775 C.Y.;    POUR 2 (WALLS)  =     15.236 C.Y.;                  TOTAL =     30.012 C.Y.

TOTAL CONCRETE QUANTITIES
-------------------------

             BARREL                =    173.351 C.Y.;    WINGWALL        =     30.012 C.Y.;                  TOTAL =    203.363 C.Y.

  * SKEWED WINGWALL LENGTH MEASURED ON CENTER LINE FROM CONSTRUCTION JOINT
 ** DISTANCE FROM OUTSIDE EDGE OF BARREL EXTERIOR WALL TO CONSTRUCTION JOINT ON CENTER LINE OF WINGWALL
*** INCLUDE TOE AND KEY AT BARREL ENDS
```

BOX CULVERT AND WINGWALL DESIGN VERSION NO. 2.30

PROJECT NUMBER 55030-3418

LOCATION DESCRIPTION : LEON COUNTY US 90 STA. 220+36
ENVIRONMENT : SLIGHTLY AGGRESSIVE, USE CLASS II CONCRETE

STEEL QUANTITIES AND BAR SCHEDULE

BARREL QUANTITIES:

LOCATION	BAR	NUMBER	SETS	SIZE	SPACING (FT-IN)	TYPE	LENGTH (FT-IN)	WEIGHT (LB)	B LENGTH (FT-IN)	C LENGTH (FT-IN)	D LENGTH (FT-IN)
TOP SLAB	A100	316		5	0- 7 1/2	1	9- 2	3021			
TOP SLAB LEFT SIDE	A101	2		5	0- 7 1/2	1	4- 0	8			
TOP SLAB RIGHT SIDE	A151	2		5	0- 7 1/2	1	5- 4	11			
BOT SLAB	A200	364		5	0- 6 1/2	1	9- 2	3480			
BOT SLAB LEFT SIDE	A201	2		5	0- 6 1/2	1	4- 7	10			
BOT SLAB RIGHT SIDE	A251	2		5	0- 6 1/2	1	5-10	12			
	A252	2		5	0- 6 1/2	1	2-10	6			
CORNER (TOP)	A1	534		4	0- 9	10	4-11	1754	2- 3	2- 8	
CORNER (BOTTOM)	A2	534		4	0- 9	10	4-11	1754	2- 3	2- 8	
EXTERIOR WALL (INSIDE)	B1	534		4	0- 9	1	7- 2	2556			
EXTERIOR WALL (OUTSIDE)	B2	534		4	0- 9	1	5- 2	1843			
LONGITUDINAL	C1	216	(6)	4	1- 6	1	34- 8	5002			
HEADWALL LEFT SIDE	G1	2	(1)	4	SEE INDEX	1	9- 5	13			
HEADWALL RIGHT SIDE	G2	2	(1)	4	SEE INDEX	1	9- 9	13			
HEADWALL BOTH SIDES	P	21		4	1- 0	11	3- 5	48	0-11	1-	1- 1
SLAB ENDS LEFT SIDE	S2	6	(1)	8	SEE INDEX	1	9- 5	151			
SLAB ENDS RIGHT SIDE	S3	6	(1)	8	SEE INDEX	1	9- 9	156			

PER FOOT BARREL STEEL QUANTITY 96. LBS./FOOT
TOTAL BARREL STEEL QUANTITY 19838 LBS.

WINGWALL QUANTITIES:

LOCATION	BAR	NUMBER SETS	SIZE	SPACING (FT-IN)	TYPE	LENGTH (FT-IN)	WEIGHT (LB)	B LENGTH (FT-IN)	C LENGTH (FT-IN)
STEM-LEFT FRONT	F1	10	5	1- 5 1/2	10	9-10	103	1- 9	8- 1
STEM-LEFT BACK	F2	12	5	1- 5 1/2	10	9-10	123	1- 9	8- 1
STEM-RIGHT FRONT	F3	8 *	5	1- 5 1/2	10	17- 7 *	147	1- 9 *	8- 1 *
STEM-RIGHT BACK	F4	7 *	5	1- 5 1/2	10	13- 5 *	98	1- 9 *	8- 1 *
STEM-LEFT FRONT	J1	10	4	1- 5 1/2	1	8- 1	54		
STEM-LEFT BACK	J2	12	4	1- 5 1/2	1	8- 1	65		
STEM-RIGHT FRONT	J3	8 *	4	1- 5 1/2	1	14- 1 *	75		
STEM-RIGHT BACK	J4	7 *	4	1- 5 1/2	1	9-11 *	46		
STEM - LEFT FRONT	K1	10	4	1- 6	1	14- 7	97		
STEM - LEFT BACK	K2	10	4	1- 6	1	15-10	106		
STEM - RIGHT FRONT	K3	4 *	4	1- 6	1	22- 2 *	59		
STEM - RIGHT BACK	K4	3 *	4	1- 6	1	20- 6 *	41		
FOOTING - LEFT FRONT	FK1	4	4	SEE INDEX	1	14- 7	39		
FOOTING - LEFT BACK	FK2	4	4	SEE INDEX	1	15-10	42		
FOOTING - RIGHT FRONT	FK3	4	4	SEE INDEX	1	22- 2	59		
FOOTING - RIGHT BACK	FK4	4	4	SEE INDEX	1	20- 6	55		
FOOTING-LEFT FRONT	L1	11	4	1- 5 1/2	1	4-10	36		
FOOTING-LEFT BACK	L2	12	4	1- 5 1/2	1	4-10	39		
FOOTING-RIGHT FRONT	L3	16	4	1- 5 1/2	1	4-10	52		
FOOTING-RIGHT BACK	L4	15	4	1- 5 1/2	1	4-10	48		
FOOTING LEFT SIDE	M1	2 (1)	4	SEE INDEX	1	40-10	55		
FOOTING RIGHT SIDE	M2	4 (2)	4	SEE INDEX	1	28-11	77		
STEM TO BARREL DOWELS	N **	32	6	1- 0	10	6- 0	288	3- 0	3- 0
FOOTING SPILLWAY	R	20	4	1- 0	1	2- 7	35		

PER FOOT WINGWALL STEEL QUANTITY 25. LBS./FOOT
TOTAL WINGWALL STEEL QUANTITY 1839 LBS.

* LENGTH IS THE SUM OF BAR LENGTH AT BEGINNING/TOP AND ENDING/BOTTOM OF WINGWALL, NUMBER OF BAR IS THE AMOUNT REQUIRED FOR THIS SUMMATION OF LENGTH. B AND C LENGTH IS FOR THE FIRST BAR OF WINGWALL CLOSE TO THE JOINT OF WINGWALL AND BARREL.

** FOR SKEWED WINGS BEND BARS N TO ACCOMMODATE SKEW, PROVIDE FOR 3 FT. OF BAR IN THE WINGWALL AND HEADWALL.

TOTAL STEEL QUANTITIES

BARREL	19838 LBS.
WINGWALL	1839 LBS.
TOTAL	21677 LBS.

FLORIDA DEPARTMENT OF TRANSPORTATION
DIVISION OF PRECONSTRUCTION AND DESIGN

CULVERT DESIGN

RUN
** MOMENT * AXIAL FORCE * SHEAR FOR LOAD FACTOR DESIGN AT TENTH POINT **

M-PT	+MOMENT	-MOMENT	+A.F.	-A.F.	+SHEAR	-SHEAR
1- 0	-3.192	-7.948	2.858	7.738	1.509	-0.440
1- 1	-3.019	-7.337	2.858	7.738	1.193	-0.287
1- 2	-2.318	-7.368	2.858	7.738	0.893	-0.157
1- 3	-1.812	-7.318	2.858	7.738	0.612	-0.051
1- 4	-1.490	-7.206	2.858	7.738	0.349	0.031
1- 5	-1.340	-7.046	2.858	7.738	0.264	-0.073
1- 6	-1.351	-6.855	2.858	7.738	0.297	-0.301
1- 7	-1.509	-6.650	2.858	7.738	0.307	-0.511
1- 8	-1.802	-6.446	2.858	7.738	0.293	-0.703
1- 9	-2.212	-6.268	2.858	7.738	0.255	-0.878
1-10	-2.102	-6.755	2.858	7.738	0.193	-1.035
2- 0	-2.102	-6.760	-0.191	0.860	7.738	2.858
2- 1	0.847	-1.634	-0.192	0.925	6.517	2.286
2- 2	4.972	1.251	-0.147	0.862	5.204	1.715
2- 3	8.194	2.501	-0.073	0.862	3.888	1.143
2- 4	10.142	3.252	-0.193	0.862	2.582	0.572
2- 5	10.819	3.502	-0.193	0.862	0.909	-1.052
2- 6	10.142	3.252	-0.193	0.862	-0.572	-2.233
2- 7	8.194	2.501	-0.073	0.862	-1.143	-3.519
2- 8	4.972	1.251	-0.147	0.862	-1.715	-4.832
2- 9	0.847	-1.634	-0.192	0.925	-2.286	-6.148
2-10	-2.102	-6.760	-0.191	0.860	-2.858	-7.494
4- 0	-3.192	-7.948	-0.265	1.507	8.725	3.845
4- 1	-0.067	-1.172	-0.266	1.353	6.980	3.076
4- 2	5.003	1.454	-0.267	1.509	5.235	2.307
4- 3	8.820	3.136	-0.267	1.509	3.490	1.538
4- 4	11.111	4.146	-0.267	1.509	1.745	0.769
4- 5	11.874	4.482	-0.267	1.509	0.049	-0.040
4- 6	11.111	4.146	-0.267	1.509	-0.769	-1.745
4- 7	8.820	3.136	-0.267	1.509	-1.538	-3.490
4- 8	5.003	1.454	-0.267	1.509	-2.307	-5.235
4- 9	-0.067	-1.172	-0.266	1.353	-3.076	-6.980
4-10	-3.192	-7.948	-0.265	1.507	-3.845	-8.725

FLORIDA DEPARTMENT OF TRANSPORTATION
DIVISION OF PRECONSTRUCTION AND DESIGN

CULVERT DESIGN

RUN

***** INFLUENCE LINES FOR MOMENT *****
***** MEMBER NO. 1 *****

	.0	.1	.2	.3	.4	.5	.6	.7	.8	.9	1.0
100	-0.49	-0.43	-0.38	-0.32	-0.26	-0.20	-0.14	-0.09	-0.03	0.03	0.09
105	-0.50	-0.45	-0.41	-0.37	-0.33	-0.29	-0.25	-0.21	-0.17	-0.12	-0.08
110	-0.49	-0.47	-0.44	-0.41	-0.39	-0.36	-0.33	-0.31	-0.28	-0.26	-0.23
115	-0.49	-0.47	-0.46	-0.45	-0.43	-0.42	-0.41	-0.39	-0.38	-0.37	-0.35
120	-0.48	-0.47	-0.47	-0.47	-0.47	-0.46	-0.46	-0.46	-0.46	-0.46	-0.45
125	-0.46	-0.47	-0.48	-0.48	-0.49	-0.50	-0.50	-0.51	-0.52	-0.53	-0.53
130	-0.44	-0.46	-0.47	-0.49	-0.50	-0.52	-0.53	-0.55	-0.56	-0.58	-0.59
135	-0.43	-0.45	-0.47	-0.49	-0.51	-0.53	-0.55	-0.57	-0.59	-0.62	-0.64
140	-0.41	-0.43	-0.46	-0.48	-0.51	-0.53	-0.56	-0.58	-0.61	-0.63	-0.66
145	-0.39	-0.42	-0.44	-0.47	-0.50	-0.53	-0.56	-0.58	-0.61	-0.64	-0.67
150	-0.37	-0.40	-0.43	-0.46	-0.49	-0.51	-0.54	-0.57	-0.60	-0.63	-0.66
155	-0.36	-0.38	-0.41	-0.44	-0.47	-0.50	-0.52	-0.55	-0.58	-0.61	-0.64
160	-0.34	-0.37	-0.39	-0.42	-0.45	-0.47	-0.50	-0.52	-0.55	-0.57	-0.60
165	-0.34	-0.36	-0.38	-0.40	-0.42	-0.44	-0.46	-0.49	-0.51	-0.53	-0.55
170	-0.34	-0.35	-0.37	-0.38	-0.40	-0.41	-0.43	-0.44	-0.46	-0.47	-0.49
175	-0.34	-0.35	-0.36	-0.36	-0.37	-0.38	-0.38	-0.39	-0.40	-0.41	-0.41
180	-0.35	-0.35	-0.35	-0.35	-0.34	-0.34	-0.34	-0.34	-0.34	-0.33	-0.33
185	-0.38	-0.36	-0.35	-0.33	-0.32	-0.31	-0.29	-0.28	-0.27	-0.25	-0.24
190	-0.41	-0.38	-0.35	-0.33	-0.30	-0.27	-0.25	-0.22	-0.19	-0.17	-0.14
195	-0.45	-0.41	-0.36	-0.32	-0.28	-0.24	-0.20	-0.16	-0.12	-0.07	-0.03
200	-0.50	-0.44	-0.38	-0.33	-0.27	-0.21	-0.15	-0.09	-0.04	0.02	0.08

***** MEMBER NO. 2 *****

	.0	.1	.2	.3	.4	.5	.6	.7	.8	.9	1.0
100	0.09	0.09	0.09	0.08	0.08	0.08	0.08	0.08	0.08	0.08	0.08
105	-0.08	0.32	0.28	0.24	0.20	0.16	0.12	0.08	0.04	0.01	-0.03
110	-0.23	0.57	0.49	0.41	0.33	0.25	0.17	0.10	0.02	-0.06	-0.14
115	-0.35	0.40	0.72	0.60	0.48	0.36	0.24	0.12	0.00	-0.12	-0.24
120	-0.45	0.26	0.97	0.81	0.65	0.48	0.32	0.16	-0.01	-0.17	-0.33
125	-0.53	0.13	0.80	1.03	0.83	0.62	0.41	0.21	0.00	-0.21	-0.41
130	-0.59	0.03	0.65	1.28	1.02	0.77	0.52	0.27	0.02	-0.23	-0.49
135	-0.64	-0.06	0.52	1.10	1.24	0.94	0.64	0.34	0.05	-0.25	-0.55
140	-0.66	-0.13	0.40	0.93	1.46	1.12	0.78	0.43	0.09	-0.25	-0.60
145	-0.67	-0.18	0.30	0.79	1.27	1.32	0.93	0.54	0.15	-0.24	-0.64
150	-0.66	-0.22	0.22	0.65	1.09	1.53	1.09	0.65	0.22	-0.22	-0.66
155	-0.64	-0.25	0.15	0.54	0.93	1.32	1.27	0.79	0.30	-0.18	-0.67
160	-0.60	-0.26	0.09	0.43	0.78	1.12	1.46	0.93	0.40	-0.13	-0.66
165	-0.55	-0.25	0.05	0.34	0.64	0.94	1.24	1.10	0.52	-0.06	-0.64
170	-0.49	-0.23	0.02	0.27	0.52	0.77	1.02	1.28	0.65	0.03	-0.59
175	-0.41	-0.21	0.00	0.21	0.41	0.62	0.83	1.03	0.80	0.14	-0.53
180	-0.33	-0.17	-0.01	0.16	0.32	0.48	0.65	0.81	0.97	0.26	-0.45
185	-0.24	-0.12	0.00	0.12	0.24	0.36	0.48	0.60	0.72	0.40	-0.35
190	-0.14	-0.06	0.02	0.10	0.17	0.25	0.33	0.41	0.49	0.57	-0.23
195	-0.03	0.01	0.04	0.08	0.12	0.16	0.20	0.24	0.28	0.32	-0.08
200	0.08	0.08	0.08	0.08	0.08	0.08	0.08	0.08	0.09	0.09	0.09

***** MEMBER NO. 4 *****

	.0	.1	.2	.3	.4	.5	.6	.7	.8	.9	1.0
100	0.49	0.10	-0.21	-0.43	-0.56	-0.60	-0.55	-0.42	-0.20	0.10	0.50
105	0.50	0.10	-0.21	-0.44	-0.57	-0.62	-0.58	-0.46	-0.24	0.06	0.45
110	0.49	0.09	-0.22	-0.45	-0.59	-0.64	-0.61	-0.49	-0.28	0.02	0.41
115	0.49	0.08	-0.24	-0.47	-0.61	-0.66	-0.63	-0.51	-0.30	-0.01	0.38
120	0.48	0.07	-0.25	-0.48	-0.62	-0.68	-0.65	-0.53	-0.32	-0.03	0.35
125	0.46	0.06	-0.26	-0.49	-0.64	-0.69	-0.66	-0.54	-0.33	-0.04	0.34
130	0.44	0.04	-0.28	-0.51	-0.65	-0.70	-0.67	-0.55	-0.34	-0.05	0.34
135	0.43	0.02	-0.29	-0.52	-0.66	-0.71	-0.68	-0.56	-0.35	-0.05	0.34
140	0.41	0.01	-0.31	-0.53	-0.67	-0.72	-0.68	-0.56	-0.34	-0.04	0.34
145	0.39	-0.01	-0.32	-0.54	-0.68	-0.72	-0.68	-0.55	-0.34	-0.04	0.36
150	0.37	-0.02	-0.33	-0.55	-0.68	-0.72	-0.68	-0.55	-0.33	-0.02	0.37
155	0.36	-0.04	-0.34	-0.55	-0.68	-0.72	-0.68	-0.54	-0.32	-0.01	0.39
160	0.34	-0.04	-0.34	-0.56	-0.68	-0.72	-0.67	-0.53	-0.31	0.01	0.41
165	0.34	-0.05	-0.35	-0.56	-0.68	-0.71	-0.66	-0.52	-0.29	0.02	0.43
170	0.34	-0.05	-0.34	-0.55	-0.67	-0.70	-0.65	-0.51	-0.28	0.04	0.44
175	0.34	-0.04	-0.33	-0.54	-0.66	-0.69	-0.64	-0.49	-0.26	0.06	0.46
180	0.35	-0.03	-0.32	-0.53	-0.65	-0.68	-0.62	-0.48	-0.25	0.07	0.48
185	0.38	-0.01	-0.30	-0.51	-0.63	-0.66	-0.61	-0.47	-0.24	0.08	0.49
190	0.41	0.02	-0.28	-0.49	-0.61	-0.64	-0.59	-0.45	-0.22	0.09	0.49
195	0.45	0.06	-0.24	-0.46	-0.58	-0.62	-0.57	-0.44	-0.21	0.10	0.50
200	0.50	0.10	-0.20	-0.42	-0.55	-0.60	-0.56	-0.43	-0.21	0.10	0.49

INFLUENCE LINES FOR SHEAR AND AXIAL FORCE *****

***** MEMBER NO. 1 *****

	.0	.1	.2	.3	.4	.5	.6	.7	.8	.9	1.0	A.F.
100	0.09	0.09	0.09	0.09	0.09	0.09	0.09	0.09	0.09	0.09	0.09	-1.00
105	0.06	0.06	0.06	0.06	0.06	0.06	0.06	0.06	0.06	0.06	0.06	-0.96
110	0.04	0.04	0.04	0.04	0.04	0.04	0.04	0.04	0.04	0.04	0.04	-0.91
115	0.02	0.02	0.02	0.02	0.02	0.02	0.02	0.02	0.02	0.02	0.02	-0.86
120	0.00	0.00	0.00	0.00	0.00	0.00	0.00	0.00	0.00	0.00	0.00	-0.81
125	-0.01	-0.01	-0.01	-0.01	-0.01	-0.01	-0.01	-0.01	-0.01	-0.01	-0.01	-0.76
130	-0.02	-0.02	-0.02	-0.02	-0.02	-0.02	-0.02	-0.02	-0.02	-0.02	-0.02	-0.71
135	-0.03	-0.03	-0.03	-0.03	-0.03	-0.03	-0.03	-0.03	-0.03	-0.03	-0.03	-0.66
140	-0.04	-0.04	-0.04	-0.04	-0.04	-0.04	-0.04	-0.04	-0.04	-0.04	-0.04	-0.61
145	-0.04	-0.04	-0.04	-0.04	-0.04	-0.04	-0.04	-0.04	-0.04	-0.04	-0.04	-0.55
150	-0.04	-0.04	-0.04	-0.04	-0.04	-0.04	-0.04	-0.04	-0.04	-0.04	-0.04	-0.50
155	-0.04	-0.04	-0.04	-0.04	-0.04	-0.04	-0.04	-0.04	-0.04	-0.04	-0.04	-0.45
160	-0.04	-0.04	-0.04	-0.04	-0.04	-0.04	-0.04	-0.04	-0.04	-0.04	-0.04	-0.39
165	-0.03	-0.03	-0.03	-0.03	-0.03	-0.03	-0.03	-0.03	-0.03	-0.03	-0.03	-0.34
170	-0.02	-0.02	-0.02	-0.02	-0.02	-0.02	-0.02	-0.02	-0.02	-0.02	-0.02	-0.29
175	-0.01	-0.01	-0.01	-0.01	-0.01	-0.01	-0.01	-0.01	-0.01	-0.01	-0.01	-0.24
180	0.00	0.00	0.00	0.00	0.00	0.00	0.00	0.00	0.00	0.00	0.00	-0.19
185	0.02	0.02	0.02	0.02	0.02	0.02	0.02	0.02	0.02	0.02	0.02	-0.14
190	0.04	0.04	0.04	0.04	0.04	0.04	0.04	0.04	0.04	0.04	0.04	-0.09
195	0.06	0.06	0.06	0.06	0.06	0.06	0.06	0.06	0.06	0.06	0.06	-0.04
200	0.09	0.09	0.09	0.09	0.09	0.09	0.09	0.09	0.09	0.09	0.09	0.00

***** MEMBER NO. 2 *****

	.0	.1	.2	.3	.4	.5	.6	.7	.8	.9	1.0	A.F.
100	1.00	0.00	0.00	0.00	0.00	0.00	0.00	0.00	0.00	0.00	0.00	0.09
105	0.96	-0.04	-0.04	-0.04	-0.04	-0.04	-0.04	-0.04	-0.04	-0.04	-0.04	0.06
110	0.91	0.91	-0.09	-0.09	-0.09	-0.09	-0.09	-0.09	-0.09	-0.09	-0.09	0.04
115	0.86	0.86	-0.14	-0.14	-0.14	-0.14	-0.14	-0.14	-0.14	-0.14	-0.14	0.02
120	0.81	0.81	0.81	-0.19	-0.19	-0.19	-0.19	-0.19	-0.19	-0.19	-0.19	0.00
125	0.76	0.76	0.76	-0.24	-0.24	-0.24	-0.24	-0.24	-0.24	-0.24	-0.24	-0.01
130	0.71	0.71	0.71	0.71	-0.29	-0.29	-0.29	-0.29	-0.29	-0.29	-0.29	-0.02
135	0.66	0.66	0.66	0.66	-0.34	-0.34	-0.34	-0.34	-0.34	-0.34	-0.34	-0.03
140	0.61	0.61	0.61	0.61	0.61	-0.39	-0.39	-0.39	-0.39	-0.39	-0.39	-0.04
145	0.55	0.55	0.55	0.55	0.55	-0.45	-0.45	-0.45	-0.45	-0.45	-0.45	-0.04
150	0.50	0.50	0.50	0.50	0.50	0.50	-0.50	-0.50	-0.50	-0.50	-0.50	-0.04
155	0.45	0.45	0.45	0.45	0.45	0.45	-0.55	-0.55	-0.55	-0.55	-0.55	-0.04
160	0.39	0.39	0.39	0.39	0.39	0.39	0.39	-0.61	-0.61	-0.61	-0.61	-0.04
165	0.34	0.34	0.34	0.34	0.34	0.34	0.34	-0.66	-0.66	-0.66	-0.66	-0.03
170	0.29	0.29	0.29	0.29	0.29	0.29	0.29	0.29	-0.71	-0.71	-0.71	-0.02
175	0.24	0.24	0.24	0.24	0.24	0.24	0.24	0.24	-0.76	-0.76	-0.76	-0.01
180	0.19	0.19	0.19	0.19	0.19	0.19	0.19	0.19	0.19	-0.81	-0.81	0.00
185	0.14	0.14	0.14	0.14	0.14	0.14	0.14	0.14	0.14	-0.86	-0.86	0.02
190	0.09	0.09	0.09	0.09	0.09	0.09	0.09	0.09	0.09	0.09	-0.91	0.04
195	0.04	0.04	0.04	0.04	0.04	0.04	0.04	0.04	0.04	0.04	-0.96	0.06
200	0.00	0.00	0.00	0.00	0.00	0.00	0.00	0.00	0.00	0.00	0.00	0.09

***** MEMBER NO. 4 *****

	.0	.1	.2	.3	.4	.5	.6	.7	.8	.9	1.0	A.F.
100	-0.50	-0.40	-0.30	-0.20	-0.10	0.00	0.10	0.20	0.30	0.40	0.50	-0.09
105	-0.51	-0.41	-0.31	-0.21	-0.11	-0.01	0.09	0.19	0.29	0.39	0.49	-0.06
110	-0.51	-0.41	-0.31	-0.21	-0.11	-0.01	0.09	0.19	0.29	0.39	0.49	-0.04
115	-0.51	-0.41	-0.31	-0.21	-0.11	-0.01	0.09	0.19	0.29	0.39	0.49	-0.02
120	-0.51	-0.41	-0.31	-0.21	-0.11	-0.01	0.09	0.19	0.29	0.39	0.49	0.00
125	-0.51	-0.41	-0.31	-0.21	-0.11	-0.01	0.09	0.19	0.29	0.39	0.49	0.01
130	-0.51	-0.41	-0.31	-0.21	-0.11	-0.01	0.09	0.19	0.29	0.39	0.49	0.02
135	-0.51	-0.41	-0.31	-0.21	-0.11	-0.01	0.09	0.19	0.29	0.39	0.49	0.03
140	-0.51	-0.41	-0.31	-0.21	-0.11	-0.01	0.09	0.19	0.29	0.39	0.49	0.04
145	-0.50	-0.40	-0.30	-0.20	-0.10	0.00	0.10	0.20	0.30	0.40	0.50	0.04
150	-0.50	-0.40	-0.30	-0.20	-0.10	0.00	0.10	0.20	0.30	0.40	0.50	0.04
155	-0.50	-0.40	-0.30	-0.20	-0.10	0.00	0.10	0.20	0.30	0.40	0.50	0.04
160	-0.49	-0.39	-0.29	-0.19	-0.09	0.01	0.11	0.21	0.31	0.41	0.51	0.04
165	-0.49	-0.39	-0.29	-0.19	-0.09	0.01	0.11	0.21	0.31	0.41	0.51	0.03
170	-0.49	-0.39	-0.29	-0.19	-0.09	0.01	0.11	0.21	0.31	0.41	0.51	0.02
175	-0.49	-0.39	-0.29	-0.19	-0.09	0.01	0.11	0.21	0.31	0.41	0.51	0.01
180	-0.49	-0.39	-0.29	-0.19	-0.09	0.01	0.11	0.21	0.31	0.41	0.51	0.00
185	-0.49	-0.39	-0.29	-0.19	-0.09	0.01	0.11	0.21	0.31	0.41	0.51	-0.02
190	-0.49	-0.39	-0.29	-0.19	-0.09	0.01	0.11	0.21	0.31	0.41	0.51	-0.04
195	-0.49	-0.39	-0.29	-0.19	-0.09	0.01	0.11	0.21	0.31	0.41	0.51	-0.06
200	-0.50	-0.40	-0.30	-0.20	-0.10	0.00	0.10	0.20	0.30	0.40	0.50	-0.09

APPENDIX A
PROGRAM FLOW CHART

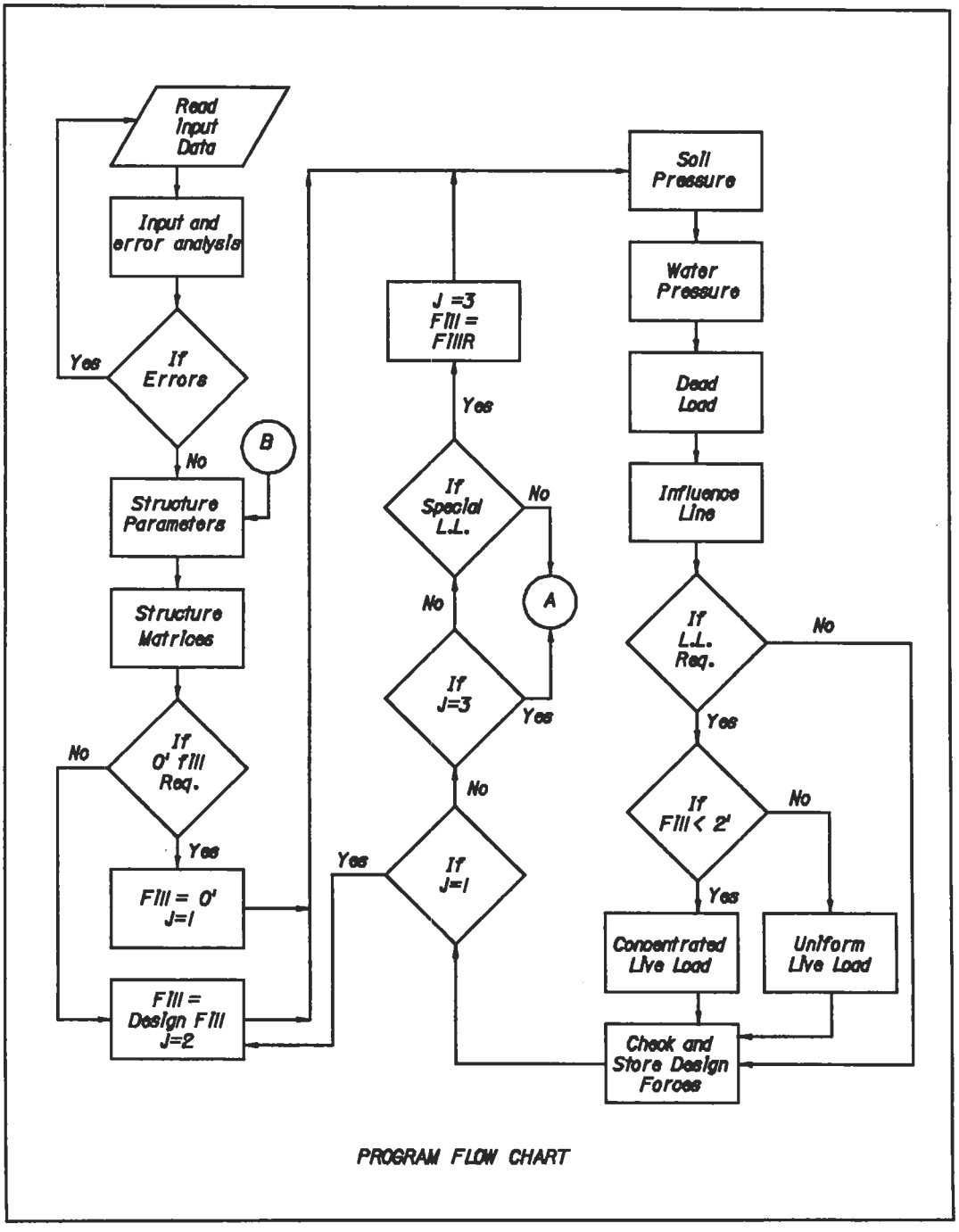

PROGRAM FLOW CHART

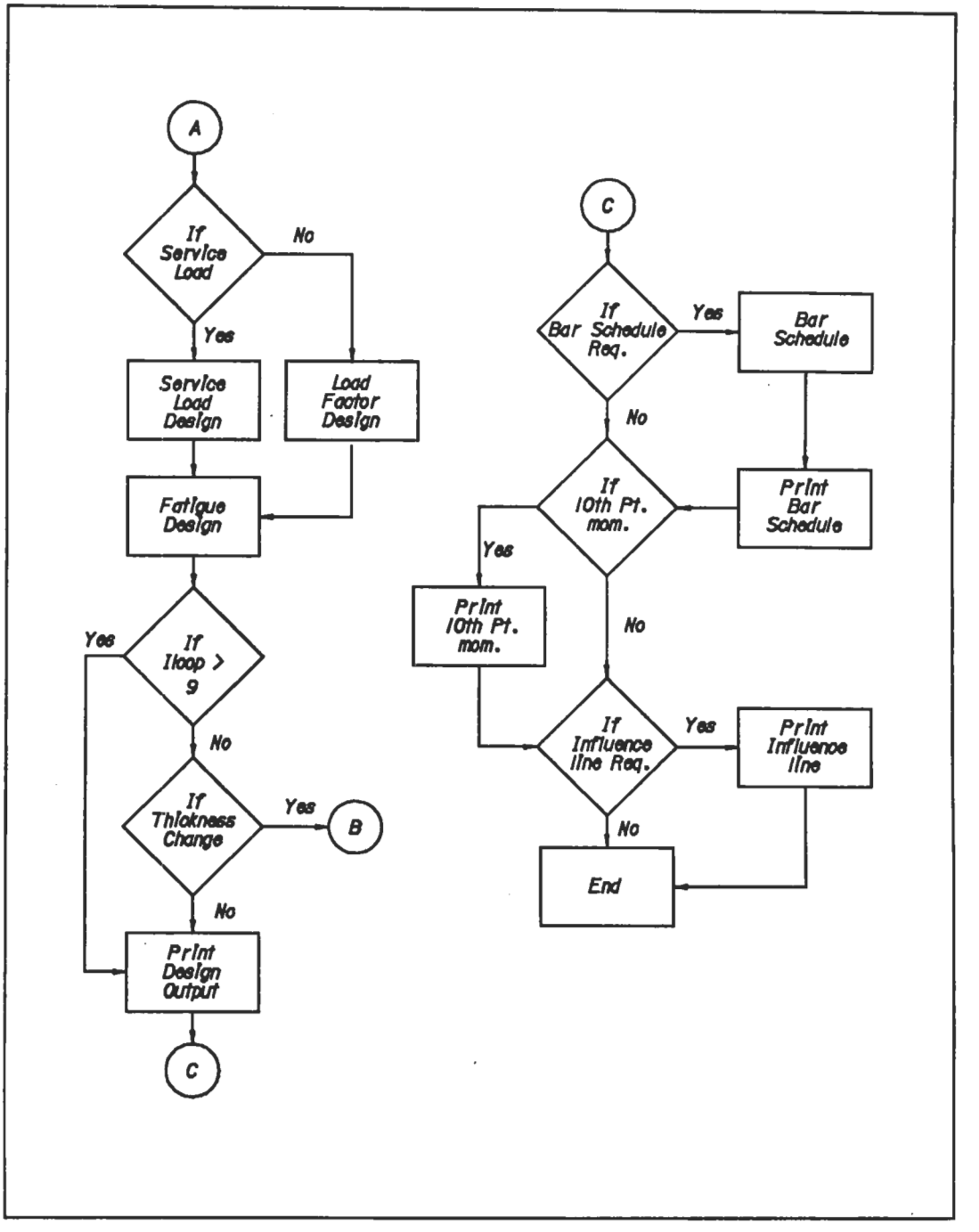
A
If Service Load
No
Yes
Service Load Design
Load Factor Design
Fatigue Design
If Iloop > 9
Yes
No
If Thickness Change
Yes
B
No
Print Design Output
C
C
If Bar Schedule Req.
Yes
Bar Schedule
No
If 10th Pt. mom.
Print Bar Schedule
Yes
Print 10th Pt. mom.
No
If Influence line Req.
Yes
Print Influence line
No
End

APPENDIX B
VARIABLE LISTING

'P'	A1	REINFORCEMENT RATIO CARD
'1'	I1	CARD NO. 1 - MATERIALS
'2'	I1	CARD NO. 2 - LOADINGS
'3'	I1	CARD NO. 3 - BOX CULVERT
'4'	I1	CARD NO. 4 - WINGWALL
AAREA		AREA OF REBAR
AB		DEPTH OF EQUIV. RECT. STRESS BLOCK AT BALANCED CONDITION
ABAR		AREA OF REINFORCING BARS IN ARRAY #4-#11
ADATE		DATE
ADDS	F3.2	SLAB THICKNESS INCREMENT
ADDW	F3.2	WALL THICKNESS INCREMENT
AD1(I)		W.W.
AFLOOR		
AHITE		
ALIVE		HS20, H20, HS15, H15, HS10, H10 LIVE LOADS
ALLCOV	f2.1	WINGWALL CONCRETE COVER EXCEPT FRONT FACE
ANDWIL		LEFT STRAIGHT WINGWALL LENGTH IN INTEGER
ANDWIR		RIGHT STRAIGHT WINGWALL LENGTH IN INTEGER
AR		AREA OF REBAR REQUIRED AT CONTROLLING PT.
AR(L)		W.W.
AREA(J)		W.W.
ARR(1)		W.W.
ARR(2)		W.W.
ARR(3)		W.W.
ASAT		EXTERNAL STIFFNESS MATRIX
ASB		AREA OF REBAR REQUIRED AT CRITICAL SECTION
ASP		TENSION REINFORCEMENT RATIO ASP=AS/bd
ASPB		REINFORCEMENT RATIO IN BALANCED CONDITIONS
ASPM		TRIAL REINFORCEMENT RATIO ASPM=0.5xASPB
ATYPE		TYPE OF BARREL; SINGLE, DOUBLE, TRIPLE, QDRPLE
A1		AREA OF TOP SLAB SECTION
A2		AREA OF EXTERIOR WALL SECTION
A3		AREA OF INTERIOR WALL SECTION
A4		AREA OF BOTTOM SLAB SECTION
BARD		ARRAY OF REINFORCING BAR DIAMETERS, #4-#11
BB		FACTOR OF THE WIDTH OF EQUIV. RECT. STRESS BLOCK .85
BBARH		
BD		MAX. DESIGN DL MOMENT/MAX. DESIGN TOTAL MOMENT
BFILT	F5.2	BOTTOM HAUNCH
BNDWIL		LEFT END WINGWALL LENGTH - STRAIGHT
BNDWIR		RIGHT END WINGWALL LENGTH - STRAIGHT
BSLAB	F4.2	BOTTOM SLAB THICKNESS -INPUT
BTYPE		TYPE OF WALL; EXT./INT. WALL, TOP/BOTTOM SLAB
B1		FACTOR OF THE DEPTH OF EQUIV. RECT. STRESS BLOCK
CE		CONCRETE MODULUS OF ELASTICITY
CHCU		REBAR SUPPORT HEIGHT BASED ON BAR DIAMETER IN 1/4" INCRE.
CN	F3.1	MODULAR RATIO : STEEL/CONCRETE
COMM(17)		
COMS	A12	COMMENTS
COMS(3)		
COVB	F3.2	BOTTOM SLAB CONCRETE COVER (TO CENTER OF BAR)
COVIN	F3.2	INTERIOR WALL CONCRETE COVER (TO CENTER OF BAR)
COVS	F3.2	TOP SLAB CONCRETE COVER (TO CENTER OF BAR)
COVW	F3.2	EXTERIOR WALL CONCRETE COVER (TO CENTER OF BAR)
CULEXT	I3	CULVERT EXTENSION

C1		COEFFICIENT FOR SETTING SLAB THICKNESS
C2		COEFFICIENT FOR SETTING SLAB THICKNESS
C3		COEFFICIENT FOR SETTING SLAB THICKNESS
C4		COEFFICIENT FOR SETTING SLAB THICKNESS
C5		COEFFICIENT FOR SETTING SLAB THICKNESS
D(1)		STEM WIDTH-CONCRETE COVER W.W.
D(2)		FOOT HEIGHT - CONC. COVER W.W.
D(3)		EQUAL TO D(2) W.W.
DD		DISTANCE FROM EXTREME TENSION FIBER TO REBAR CENTROID
DDD		DISTANCE FROM EXTREME COMPRESSION FIBER TO REBAR CENTROID
DEVL		DEVELOPMENT LENGTH OF REINFORCING BAR
DIS		WIDTH OF SLAB IN FEET OVER WHICH WHEEL IS DISTRIBUTED
DLU		UNIFORM DEAD LOAD
DNEG	F3.2	DESIGN NEGATIVE MOMENT POSITION
D1		C. G. OF WINGWALL HEEL WIDTH
D2		C. G. OF STEM AND HEEL W.W.
D3		C. G. OF STEM ,HEEL AND TOE W.W.
D4		C. G. OF WALL AND FOOT W.W.
ECC		ECCENTRIC OF RESULTANT W.W.
ECC		ECCENTRICITY OF RESULTANT LOAD ON A SECTION
ECM		MIN. ECCENTRICITY REQUIRED BY COMPRESSION MEMBER
EDLC1	F5.3	EXTRA CONCENTRATED DEAD LOAD
EDLC2	F5.3	EXTRA CONCENTRATED DEAD LOAD-2
EDLC3	F5.3	EXTRA CONCENTRATED DEAD LOAD-3
EDLU	F4.3	EXTRA UNIFORM DEAD LOAD
EDLX1	F3.2	POSITION OF CONCENTRATED LOAD
EDLX2	F3.2	POSITION OF CONCENTRATED LOAD-2
EDLX3	F3.2	POSITION OF CONCENTRATED LOAD-3
EIOL1		EI/L TOP SLAB
EIOL2		EI/L EXTERIOR WALL
EIOL3		EI/L INTERIOR WALL
EIOL4		EI/L BOTTOM SLAB
ENVIR		ENVIRONMENT CONDITION
EWGT	F3.0	UNIT WEIGHT OF SOIL
FAFC		COMPRESSIVE STRESS IN CONCRETE CAUSED BY FATIGUE DESIGN
FALDMN		FATIGUE DESIGN NEGATIVE MOMENT
FALDMP		FATIGUE DESIGN POSITIVE MOMENT
FALLHT		WINGWALL HEIGHT FT. PART
FAMN		NEGATIVE MOMENT FOR FATIGUE DESIGN
FAMP		POSITIVE MOMENT FOR FATIGUE DESIGN
FAST		STRESS IN STRAIGHT REINFORCEMENT CAUSED BY FATIGUE DESIGN
FC		EXTREME FIBER COMPRESSIVE STRESS IN CONCRETE
FCONC	F4.0	SPECIFIED CONCRETE COMPRESSIVE STRESS
FEMB		DEAD LOAD FIXED END MOMENT AT BOTTOM SLAB
FEMS		DEAD LOAD FIXED END MOMENT AT TOP SLAB
FEML		
FEMR		
FEM1		SOIL PRESSURE FIXED END MOMENT AT TOP OF WALL
FEM2		SOIL PRESSURE FIXED END MOMENT AT BOTTOM OF WALL
FEW1		WATER PRESSURE FIXED END MOMENT AT TOP OF WALL
FEW2		WATER PRESSURE FIXED END MOMENT AT BOTTOM OF WALL
FFM		INTERIOR JOINT-FORCE MATRIX, INCLUDE FIXED END MOMENT
FFOOT		REAL VALUE OF WINGWALL FOOTING W.W.
FI		NBOX
FILL		DESIGN FILL IN FT.
FILLR	F4.2	EARTH FILL
FM		INTERIOR JOINT-FORCE MATRIX
FMOMN		TOTAL NEGATIVE MOMENT

FMOMP		TOTAL POSITIVE MOMENT
FNEEL		HEEL WIDTH IN. PART
FNLLHT		WINGWALL HEIGHT IN. PART
FNOE		TOE WIDTH IN. PART
FNOOT		WINGWALL FOOTING THICKNESS IN. PART
FNOTWI		WINGWALL FOOTING WIDTH IN. PART
FNOW1		WINGWALL KEY AND TOE VOLUME
FNTEM		WINGWALL WALL THICKNESS IN. PART
FOOT		WINGWALL FOOTING THICKNESS
FOOTWI		WIDTH OF WINGWALL FOOTING (TOE, STEM, HEEL)
FPLDN		TOTAL AXIAL FORCE OCCURED WITH FMOMN
FPLDP		TOTAL AXIAL FORCE OCCURED WITH FMOMP
FS		TENSILE STRESS IN REINFORCEMENT AT SERVICE LOADS
FSHR	F3.0	ALLOWABLE CONCRETE SHEAR STRESS
FSHRN		TOTAL NEGATIVE SHEAR
FSHRP		TOTAL POSITIVE SHEAR
FSTIR	F3.0	ALLOWABLE CONCRETE SHEAR STRESS
FSTL	F5.0	ALLOWABLE REBAR TENSILE STRESS
FYST	F5.0	SPECIFIED YIELD STRENGTH OF REINFORCEMENT
H		FILL+SLABF/2.0+SURCH(FILL+TOP SLAB THICKNESS+SURCHARGE)
HEEL		WINGWALL HEEL WIDTH
HEELMO		W.W.
HEELPL		W.W.
HEELPP		W.W.
HEELPR		HEEL PRESSURE W.W.
HEELSH		W.W.
HHEEL		REAL VALUE OF HEEL W.W.
HITE		DESIGN HEIGHT IN FT. NHITE+(SLABF+SLABBF)*0.5
HORFO		HORIZONTAL FORCE TO WINGWALL
I1		NUMBER OF MEMBERS
I2		I1+1
IALLHT		WINGWALL HEIGHT FT. PART
IBSH	I1	BAR SCHEDULE
IDSN	I1	DESIGN METHOD
IESTW		
IFIXB		BOTTOM SLAB FIXITY
IFIXI		INTERIOR WALL FIXITY
IFIXT		TOP SLAB FIXITY
IFIXW		EXTERIOR WALL FIXITY
IFOC		LOAD FACTOR CASE (IDSN=1,IFOC=0 SERVICE LOAD)
IFOOT		WINGWALL FOOTING THICKNESS FT. PART
IHAUCH		FIXED JOINT
IHEAD	I1	CARD HEAD NO.
IHEEL		HEEL WIDTH FT. PART
IHS		
IHS		THIRD AXLE LOAD
II		
ILOOP		
INFN	I1	PRINTING LIVE LOAD INFLUENCE
INTWIL		TOTAL LEFT WINGWALL LENGTH IN. PART
INTWIR		TOTAL RIGHT WINGWALL LENGTH IN. PART
IOOTWI		WINGWALL FOOTING WIDTH FT. PART
IOTWIL		TOTAL LEFT WINGWALL LENGTH FT. PART
IOTWIR		TOTAL RIGHT WINGWALL LENGTH FT. PART
IPIC		
ISAMS	I1	SAME TOP & BOTTOM SLAB DESIGN
ISAMW	I1	SAME EXTERIOR & INTERIOR WALL DESIGN
ISER		SERVICE LOAD CASE (IDSN=2, ISER=0 LOAD FACTOR)

ISHR		SHEAR LOAD CASE	
ISPT1			
ISPT2			
ISTEM		WINGWALL WALL THICKNESS	FT. PART
ISTR1			
ISTR2			
ITEST	I1	SPECIAL PRINTOUT	
ITOE		TOE WIDTH	FT. PART
IWALL		INTERIOR WALL THICKNESS	IN. -SEEDED VALUE
IWALLR	F4.2	INTERIOR WALL THICKNESS	IN.
IZOF	I1	ZERO FILL STRESS CHECK	
I1		NUMBER OF MEMBERS	
I1		ISER=0, I1=2	
I2		I1 + 1	
I2		IFOC=0, I2=2	
J		SELECTIONS OF DESIGN, SPECIAL L.L. FILL OR ZERO FILL	
KAST		'*'	
KBASE	A1	SUPPORT JOINT	
KBLK		' '	
KFOR		'4'	
KFXBS	A1	JOINT TYPE-BOTTOM SLAB	
KFXI		INTERIOR WALL JOINT TYPE	
KFXTS	A1	JOINT TYPE-TOP SLAB	
KFXW	A1	JOINT TYPE-EXTERIOR WALL	
KHACH	A1	HAUNCH	
KHWAL	A1	HEADWALL	
KODE		INPUT CARD CODE *, 1, 2, 3, 4, P	
KONE		'1'	
KPAS		'P'	
KPASS			
KTHR		'3'	
KTWO		'2'	
L			
LCODE		LIVE LOAD CODE	
LENG	F5.2	LENGTH OF CULVERT ALONG CENTER LINE	IN FT.
LENGB	F5.2	LENGTH OF CULVERT BOTTOM SLAB ALONG CENTER LINE	IN FT.
LENGB2	F5.2	LENGTH OF CULVERT BOTTOM SLAB; CULEXT = 2	IN FT.
LENGB3	F5.2	LENGTH OF CULVERT BOTTOM SLAB; CULEXT = 3	IN FT.
LENGB4	F5.2	LENGTH OF CULVERT BOTTOM SLAB; CULEXT = 4	IN FT.
LOCRES		LOCATION OF RESULTANT	W.W.
LOCSTA	A51	LOCATION & IDENTIFICATION	
LSKE	I3	LEFT CULVERT SKEW ANGLE	
LSKEW		LEFT CULVERT SKEW ANGLE	
LVLD	I1	LIVE LOAD	
LVOMT	I1	OMIT LIVE LOAD	
MAXSIZ	I2	MAX. BAR SIZE	
MEMB		NUMBER OF MEMBER	
MINF		MOMENT INFLUENCE LINE MATRIX	
MINKEY	I1	MINIMUM OUTPUT KEY	
MINSIZ	I2	MIN. BAR SIZE	
MM		MEMBER NUMBER	
MMM		NUMBER OF SPAN LOADED	
MOMALL			W.W.
MOMDL		DEAD LOAD MOMENT	
MOMEC		ECCENTRIC MOMENT	W.W
MOMENT(1)		FACTORED WALL MOMENT	W.W.
MOMENT(2)		FACTORED TOE MOMENT	W.W.
MOMENT(3)		FACTORED HEEL MOMENT	W.W.

MOMLDC		MAX. LIVE LOAD POSITIVE MOMENT	
MOMLDT		MAX. LIVE LOAD NEGATIVE MOMENT	
MOMSP		SOIL PRESSURE MOMENT	
MOMWP		WATER PRESSURE MOMENT	
MTEN	I1	PRINT M, V, P @ 1/10 POINTS	
NBOX	I1	NUMBER OF BOXES	
NB1		NBOX+1	
NCARD		INPUT CARD NUMBER	
NFILL	F5.2	DESIGN FILL	
NHITE	F4.2	CLEAR HEIGHT	2-14 FT.
NNUMB		NUMBER OF REBAR	
NOHEAD	I1	NUMBER OF HEADWALL	
NOPN		TOTAL NUMBER OF THE DEGREE OF FREEDOM	
NP1		NO. OF DEGREE OF FREEDOM FOR ROTATION AT INITIAL PT.	
NP2		NO. OF DEGREE OF FREEDOM FOR H-TRANSLATION AT INITIAL P	
NP3		NO. OF DEGREE OF FREEDOM FOR V-TRANSLATION AT INITIAL P	
NP4		NO. OF DEGREE OF FREEDOM FOR ROTATION AT TERMINAL PT.	
NP5		NO. OF DEGREE OF FREEDOM FOR H-TRANSLATION AT TERMINAL	
NP6		NO. OF DEGREE OF FREEDOM FOR V-TRANSLATION AT TERMINAL	
NR		NO. OF INFLUENCE LINE ORDINATES	
NSE(L)			W.W.
NSPAN	F4.2	CLEAR SPAN	
NSZ		SIZES OF REINFORCING BARS AT CRITICAL SECTIONS	
NUMB		A SET OF SIZE NUMBERS OF REINFORCING BARS	
NX			
OFACT	F4.2	OVERSTRESS FACTOR	
OSETL		LEFTSIDE OFFSET	
OVERLD	F5.0	OVERLOAD STANDARD TRUCK AXLE	
P		EXTERNAL JOINT-FORCE MATRIX	
PALOAD		PRESSURE ON WINGWALL FOOTING	
PAS	F3.3	REINFORCEMENT RATIO	
PB		AXIAL DESIGN LOAD AT BALANCE CONDITION	
PINF		AXIAL FORCE INFLUENCE LINE AT 1/20 PT. OF EACH MEMBER	
PLDMN		DESIGN AXIAL FORCE OCCURED WITH SMOMN	
PLDMP		DESIGN AXIAL FORCE OCCURED WITH SMOMP	
PMIN	F2.0	MIN. SOIL EQUIVALENT FLUID PRESSURE	
PO		AXIAL DESIGN LOAD IN PURE COMPRESSION	
PRESS	F2.0	MAX. SOIL EQUIVALENT FLUID PRESSURE	
PROJNO	A11	PROJECT NUMBER	
PWAT	F3.1	WATER WEIGHT	
RESULT		RESULTANT OF ALL MOMENTS	W.W.
ROE		REINFORCEMENT RATIO	W.W.
RSKE	I3	RIGHT CULVERT SKEW ANGLE	
SHEARA		ALLOWABLE SHEAR	W.W.
SHEARH			W.W.
SHEART			W.W.
SHEARW			W.W.
SHR		DESIGN SHEAR STRESS	
SHRDL		DEAD LOAD SHEAR FORCE	
SHRSP		SOIL PRESSURE SHEAR FORCE	
SHRWP		WATER PRESSURE SHEAR FORCE	
SIDBEV		SIDE BEVEL IN IN.	
SKLT		LEFT SKEWED WINGWALL LENGTH	
SKRT		RIGHT SKEWED WINGWALL LENGTH	
SLAB		TOP SLAB THICKNESS	IN.-SEEDED VALUE
SLABB		BOTTOM SLAB THICKNESS	IN.-SEEDED VALUE
SLABBF		BOTTOM SLAB THICKNESS IN FT.	-SEEDED VALUE
SLABBZ		BOTTOM SLAB THICKNESS	-DEFAULT OR INPUT

SLABF		TOP SLAB THICKNESS IN FT.	-SEEDED VALUE
SLABZ		TOP SLAB THICKNESS	-DEFAULT OR INPUT
SLOPEE		TWISTING COUPLE ON FOOTING	
SMOMN		TOTAL NEGATIVE MOMENT FOR SERVICE LOAD DESIGN	
SMOMP		TOTAL POSITIVE MOMENT FOR SERVICE LOAD DESIGN	
SPACMAX	F3.1	MAX. BAR SPACING	
SPACMIN	F3.1	MIN. BAR SPACING	
SPAN		NSPAN+(EXTERIOR WALL+INTERIOR WALL)/2 IN FT.	
SPCG		A SET OF REINFORCEMENT SPACINGS	
SPG		REINFORCEMENT SPACINGS AT CRITICAL SECTIONS	
SPG(L)			W.W.
SPLDN		LIVE LOAD AXIAL FORCE OCCURED WITH MOMLDT	
SPLDP		LIVE LOAD AXIAL FORCE OCCURED WITH MOMLDC	
SPM		(FEM2-FEM1)/HITE	
SPR1		SP1 * HITE/2.0 + SP2 * HITE/6.0 - SPM	
SPR2		SP1 * HITE/2.0 + SP2 * HITE/3.0 + SPM	
SP1		PRESS * H / 1000.0	
SP2		PRESS * HITE / 1000.0	
SSPCG		SPACING OF REBAR	
SSTEM		REAL VALUE OF STEM THICKNESS	W.W.
STEEL		STEEL WEIGHT	LB/FT.
STEM		WINGWALL STEM THICKNESS	
SUMVET		SUM OF VERTICAL FORCES W1,W2,W3	
SURCH	F3.1	LIVE LOAD SURCHARGE	
T		INTERIOR WALL THICKNESS	
TEMS		INTERMEDIATE SLAB THICKNESS	
TFILT	F5.2	TOP HAUNCH	
TOE		WINGWALL TOE WIDTH	
TOEMOM		MOMENT AT TOE	W.W.
TOEPRA		TOE PRESSURE	PSF
TOEPRS		TOE PRESSURE	W.W.
TOESHR			W.W.
TOPBEV		TOP BEVEL IN IN.	
TOTWIL		TOTAL LEFT WINGWALL LENGTH IN DECIMAL FT.	
TOTWIR		TOTAL RIGHT WINGWALL LENGTH IN DECIMAL FT.	
TSLAB	F4.2	TOP SLAB THICKNESS	-INPUT
TTOE		REAL VALUE OF TOE	W.W.
TVOL1		TOTAL CONCRETE VOLUME OF BARREL	
TVOL2		TOTAL CONCRETE VOLUME OF WINGWALL	
TVOL3		TOTAL CONCRETE VOLUME OF BARREL+WINGWALL	
TWALLH		TOTAL WINGWALL HEIGHT	
UMOMN		TOTAL NEGATIVE MOMENT FOR LOAD FACTOR DESIGN	
UMOMP		TOTAL POSITIVE MOMENT FOR LOAD FACTOR DESIGN	
UPLDN		AXIAL FORCE OCCURED WITH UMOMN	
UPLDP		AXIAL FORCE OCCURED WITH UMOMP	
USHRN		TOTAL NEGATIVE SHEAR FOR LOAD FACTOR DESIGN	
USHRP		TOTAL POSITIVE SHEAR FOR LOAD FACTOR DESIGN	
V		SPAN	
VIMP		IMPACT FACTOR	
VINF		SHEAR INFLUENCE LINE MATRIX	
VOLUM		CONCRETE VOLUME	CY/FT
VOL11		UNIT VOLUME OF BARREL BOTTOM SLAB	CY/FT
VOL12		UNIT VOLUME OF BARREL SIDE AND TOP	CY/FT
VOLUM1		BOTTOM SLAB CONCRETE VOLUME	CY/FT
VOLUM2		BARREL WALL CONCRETE VOLUME	CY/FT
VOLUM3		TOP SLAB CONCRETE VOLUME	CY/FT
VOLUM4		LEFT HEADWAL CONCRETE VOLUME	CY/FT
VOLUM5		RIGHT HEADWALL CONCRETE VOLUME	CY/FT

VOLUM6		TOTAL HEADWALL CONCRETE VOLUME	CY/FT
VOLUM7		TOTAL BARREL CONCRETE VOLUME	CY/FT
VSHRLN		NEGATIVE LIVE LOAD SHEAR FORCE	
VSHRLP		POSITIVE LIVE LOAD SHEAR FORCE	
VSHRN		TOTAL NEGATIVE SHEAR OF SERVICE LOAD DESIGN	
VSHRP		TOTAL POSITIVE SHEAR OF SERVICE LOAD DESIGN	
VWAT			
WALL		EXTERIOR WALL THICKNESS	IN.-SEEDED VALUE
WALLHT		WINGWALL HEIGHT	FT.
WALLIZ		INTERIOR WALL THICKNESS	-DEFAULT OR INPUT
WALLMO		WINGWALL MOMENT	
WALLR	F4.2	EXTERIOR WALL THICKNESS	
WALLSH			W.W.
WALLZ		EXTERIOR WALL THICKNESS	-DEFAULT OR INPUT
WC		WDW = (FI + 1.0) * WALLF* HITE * 150.0/(SPAN * FI)	
WD		UNIFORM DEAD LOAD DUE TO FILL AND TOP SLAB	
WDLF		L F WINGWALL LENGTH FROM C J TO BOX FACE	
WDLB		L B WINGWALL LENGTH FROM C J TO BOX FACE	
WDRF		R F WINGWALL LENGTH FROM C J TO BOX FACE	
WDRB		R B WINGWALL LENGTH FROM C J TO BOX FACE	
WDW		UNIFORM DEAD LOAD DUE TO WALLS	
WGTN		A SET OF REINFORCING BARS UNIT WEIGHT IN PLF.	
WHEEL		ONE WHEEL LIVE LOAD	
WHEER	F5.3	SPECIAL WHEEL LIVE LOAD	
WIDTH		STRAIGHT WINGWALL FACE WIDTH	IN IN.
WIDTHL		STRAIGHT WINGWALL FACE WIDTH - LEFT SIDE	IN IN.
WIDTHR		STRAIGHT WINGWALL FACE WIDTH - RIGHT SIDE	IN IN.
WIDTHF		STRAIGHT WINGWALL FRONT FACE WIDTH	IN FT.
WINDRP		WINGWALL TOP DROP	YES OR NO
WINGA		WINGWALL	
WINGA		DATE	
WINGTY	I1	HEADWALL TYPE	
WLDRPB		LEFT BACK WINGWALL TOP DROP	IN FT.
WLDRPF		RIGHT FRONT WINGWALL TOP DROP	IN FT.
WLDRPF		RIGHT BACK WINGWALL TOP DROP	IN FT.
WLDRPF		LEFT FRONT WINGWALL TOP DROP	IN FT.
WLFS		LEFT FRONT WINGWALL LENGTH IN INTEGER	IN FT.
WLBS		LEFT BACK WINGWALL LENGTH IN INTEGER	IN FT.
WRFS		RIGHT FRONT WINGWALL LENGTH IN INTEGER	IN FT.
WRBS		RIGHT BACK WINGWALL LENGTH IN INTEGER	IN FT.
WLSKEB		LEFT BACK WING WALL SKEW ANGLE	INTEGER IN DEGREE
WLSKEF		LEFT FRONT WING WALL SKEW ANGLE	INTEGER IN DEGREE
WRSKEB		RIGHT BACK WING WALL SKEW ANGLE	INTEGER IN DEGREE
WRSKEF		RIGHT FRONT WING WALL SKEW ANGLE	INTEGER IN DEGREE
WSKLF		LEFT FRONT SKEWED WINGWALL LENGTH	FT.
WSKLB		LEFT BACK SKEWED WINGWALL LENGTH	FT.
WSKRF		RIGHT FRONT SKEWED WINGWALL LENGTH	FT.
WSKRB		RIGHT BACK SKEWED WINGWALL LENGTH	FT.
WSLFR		LEFT FRONT WINGWALL SKEW ANGLE IN RADIAN	
WSLBR		LEFT BACK WINGWALL SKEW ANGLE IN RADIAN	
WSRFR		RIGHT FRONT WINGWALL SKEW ANGLE IN RADIAN	
WSRBR		RIGHT BACK WINGWALL SKEW ANGLE IN RADIAN	
WSKLFJ		L F WINGWALL DISTANCE FROM CONSTRUCTION JOINT	
WSKLBJ		L B WINGWALL DISTANCE FROM CONSTRUCTION JOINT	
WSKRFJ		R F WINGWALL DISTANCE FROM CONSTRUCTION JOINT	
WSKRBJ		R B WINGWALL DISTANCE FROM CONSTRUCTION JOINT	
WT		WD = FILL * EWGT + SLABF * 150.0 + (EDLU * 1000.0)	
WVLF1		LEFT FRONT WINGWALL CONCRETE VOLUME	

WVLB1		LEFT BACK WINGWALL CONCRETE VOLUME	
WVRF1		RIGHT FRONT WINGWALL CONCRETE VOLUME	
WVRB1		RIGHT BACK WINGWALL CONCRETE VOLUME	
WVOLLF		LEFT FRONT WINGWALL CONCRETE VOLUME	
WVOLLB		LEFT BACK WINGWALL CONCRETE VOLUME	
WVOLRF		RIGHT FRONT WINGWALL CONCRETE VOLUME	
WVOLRB		RIGHT BACK WINGWALL CONCRETE VOLUME	
WVOL1		UNIT CONCRETE VOLUME OF WINGWALL FOOTING	
WVOL2		UNIT CONCRETE VOLUME OF WINGWALL WALL	
WVOL3		TOTAL CONCRETE VOLUME OF WINGWALL	
WWCOVS		WINGWALL FRONT FACE CONCRETE COVER	
WVSLF		LEFT FRONT WINGWALL CONCRETE VOLUME	C.Y./FT.
WVSLB		LEFT BACK WINGWALL CONCRETE VOLUME	C.Y./FT.
WVSRF		RIGHT FRONT WINGWALL CONCRETE VOLUME	C.Y./FT.
WVSRB		RIGHT BACK WINGWALL CONCRETE VOLUME	C.Y./FT.
WWHTLF		LEFT FRONT END WINGWALL HEIGHT	
WWHTLB		LEFT BACK END WINGWALL HEIGHT	
WWHTRF		RIGHT FRONT END WINGWALL HEIGHT	
WWHTRB		RIGHT BACK END WINGWALL HEIGHT	
W1		EARTH WEIGHT ON WINGWALL HEEL	
W2		WINGWALL STEM WEIGHT	
W3		WINGWALL FOOT WEIGHT	
X		SLAB THICKNESS	
XD		JOINT-DISPLACEMENT MATRIX	
Y		INTERIOR WALL SLENDERNESS RATIO	
Z			
ZFILL		CALCULATED FILL	

APPENDIX C

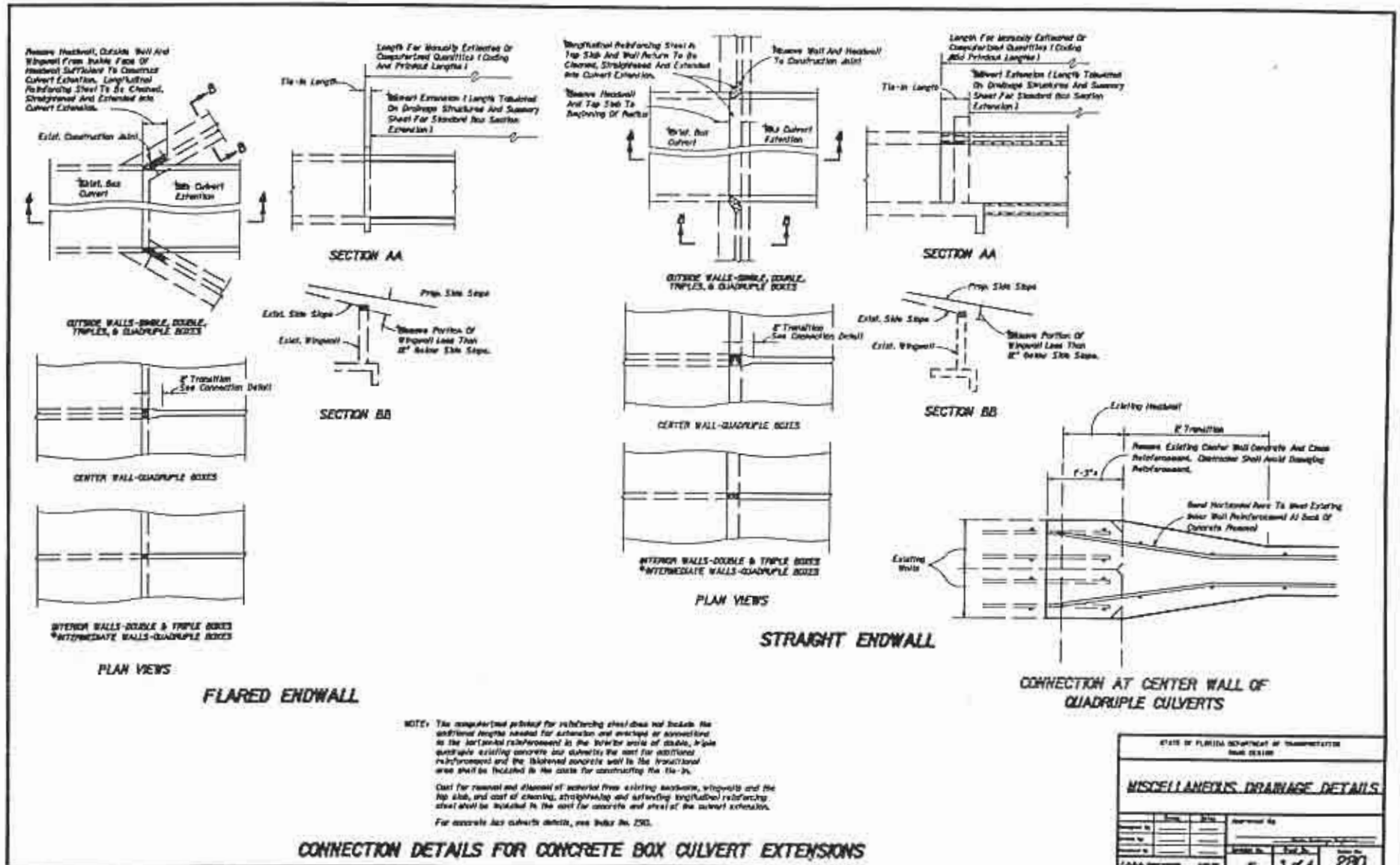

NOTE: The computerized printout for reinforcing steel does not include the additional lengths needed for extension and overlaps or connections to the horizontal reinforcement in the interior walls of double, triple quadruple existing concrete box culverts; the cost for additional reinforcement and the thickened concrete wall in the transitional area shall be included in the costs for constructing the tie-in.

Cost for removal and disposal of material from existing headwall, wingwalls and the top slab, and cost of cleaning, straightening and extending longitudinal reinforcing steel shall be included in the cost for concrete and steel of the culvert extension.

For concrete box culverts details, see Index No. 280.

CONNECTION DETAILS FOR CONCRETE BOX CULVERT EXTENSIONS

STATE OF FLORIDA DEPARTMENT OF TRANSPORTATION
ROAD DESIGN

MISCELLANEOUS DRAINAGE DETAILS

Designed By			Approved By
Drawn By			
Checked By			
Reviewed By			
F.H.W.A. Approval			
Index No.	Sheet No.	Total No.	Index No.
	3	of 4	280

APPENDIX D

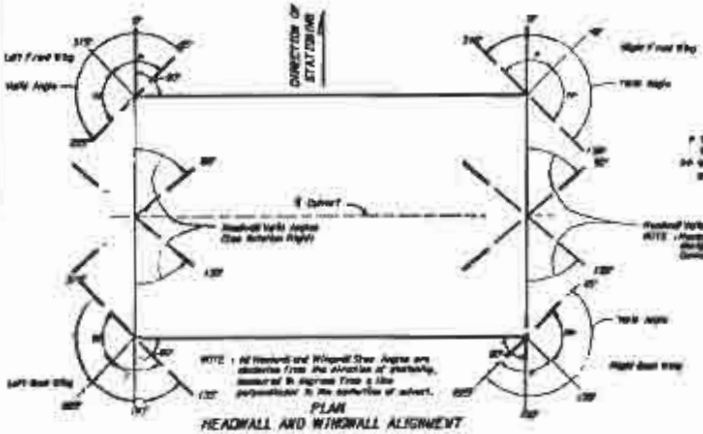

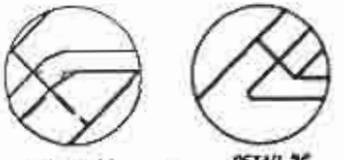

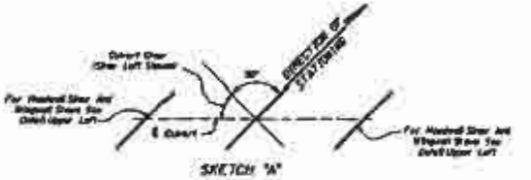

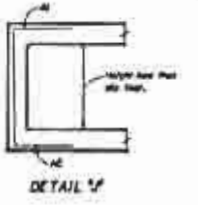

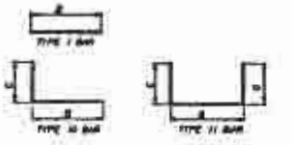

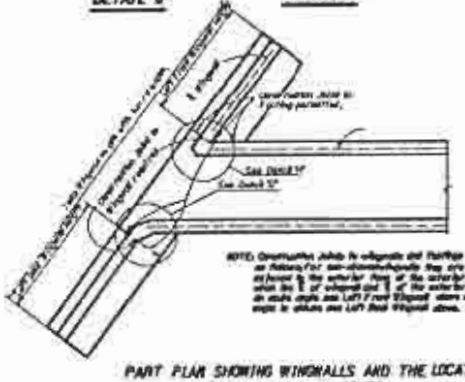

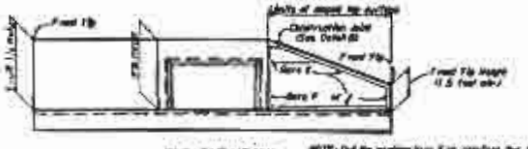

NOTE: Design for the culverts under this base are to be produced and by computer analysis, utilizing the program named PCTCBOX. Designs under this base are to be drafted to the line, base and dimensional restraints shown in the General Notes of this base and to the 10 pc sig (provided) as shown in the roadway plans. It is the contractor's responsibility to provide for supporting construction loads that exceed

GENERAL NOTES

DESIGN SPECIFICATIONS: A.A.S.H.T.O. 1983.

LOADING: HS20-44, Modified for military loading as required

SURFACE FINISH: The Class Surface Finish for all concrete surfaces shall be a general surface finish.

SQUARE CONSTRUCTION JOINTS: Construction joints in series of culverts with skewed wingwalls are to be placed parallel to the roadway and the roadway slope. In the cases one to cut grooves that the cut intersecting grooves beyond the construction joint enough for splices to be made in accordance with the base drawing "Construction Joint". The use of construction joints shall be at the expense of the contractor.

CULVERT EXTENSIONS: For cut bases and the fill ending culverts see culverts see Index No. 280

℄ REINFORCING BAR SCHEDULE:

A. When the depth is not less than or equal to 2.0 feet, Bars CE are omitted in the bottom of the top slab. In all other cases, Bars CE are replaced with Bars CF spaced at 12 inches on centers.

B. When the skew angle for a headwall equals 0 degrees plus or minus 11 degrees the respective 2 Bars CE or CF are not omitted.

C. When the barrel height is less than 6 Feet, Bars BE will be distributed as shown in Detail J.

D. If the span is less than five feet, Bars AF and AE will be Type II Bars.

E. The portions of Bars "A" that extend into Construction Joint Wingwalls shown Footings shall be wrapped with one layer of 30 lb asphalt roofing.

F. For culvert extensions Bar C1 is replaced by Bar C3 in the bottom slab.

TABLE OF MINIMUM BAR SPLICE LENGTHS

BAR SIZE	SPLICE	BAR SIZE	SPLICE
3	1'- 8"	8	3'- 10"
4	2'- 0"	9	4'- 10"
5	2'- 6"	10	5'- 1"
6	2'- 7"	11	5'- 6"
7	3'- 0"		

STATE OF FLORIDA DEPARTMENT OF TRANSPORTATION
ROAD DESIGN

CONCRETE BOX CULVERT
CULVERT DETAILS

Designed By		Date	Scale
Drawn By		Date	Scale
Checked By		Date	Scale
FHWA Approval			

Approved By

Project No. | Sheet No. | Total No.
.00 | 1 of 5 | 290

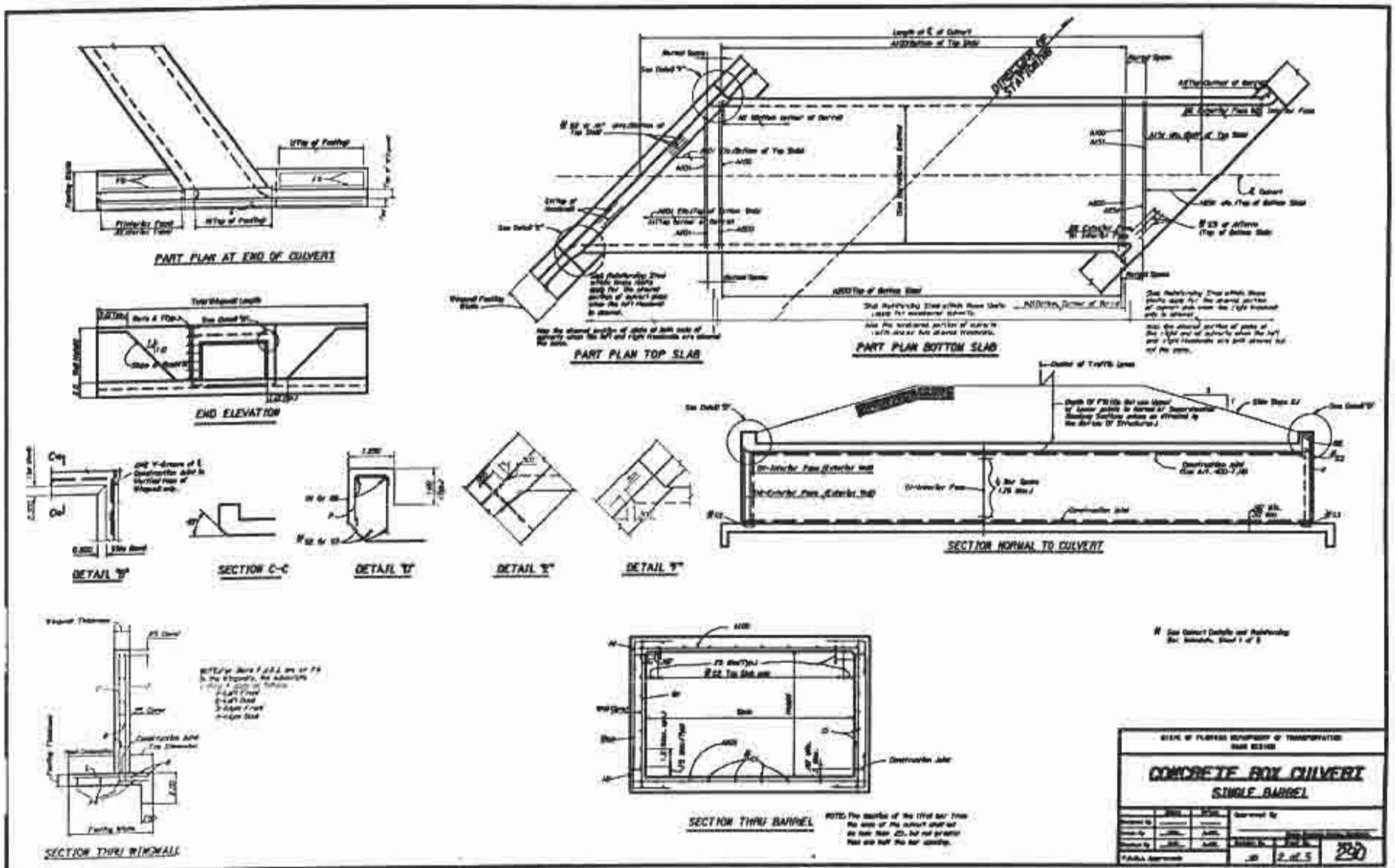
PART PLAN AT END OF CULVERT
END ELEVATION
PART PLAN TOP SLAB
PART PLAN BOTTOM SLAB
DIRECTION OF STAMPING
SECTION NORMAL TO CULVERT
DETAIL "B"
SECTION C-C
DETAIL "D"
DETAIL "E"
DETAIL "F"
SECTION THRU WINGWALL
SECTION THRU BARREL
CONCRETE BOX CULVERT
SINGLE BARREL
2 of 5
280

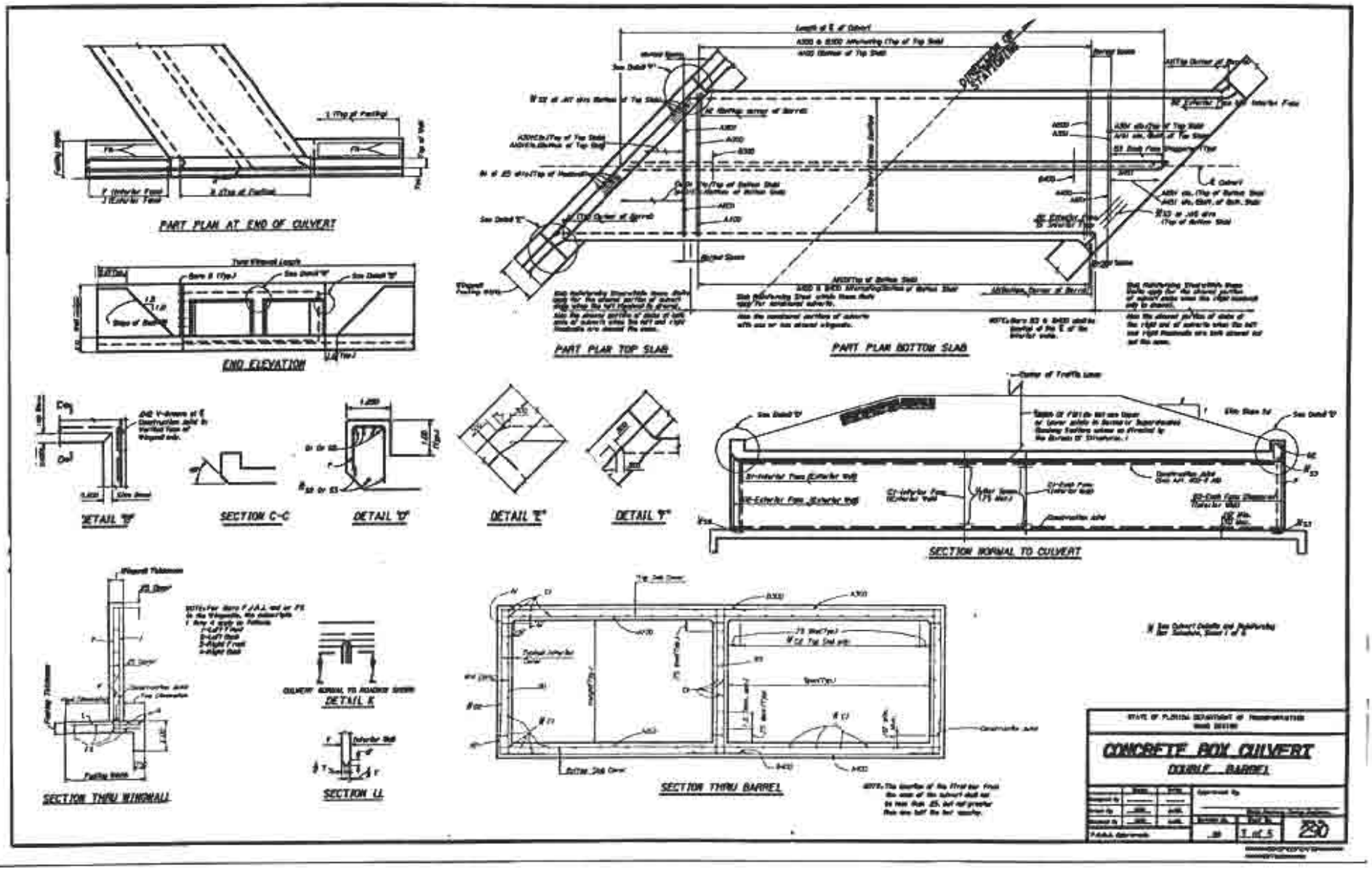
PART PLAN AT END OF CULVERT
END ELEVATION
PART PLAN TOP SLAB
PART PLAN BOTTOM SLAB
DETAIL "B"
SECTION C-C
DETAIL "D"
DETAIL "E"
DETAIL "F"
SECTION NORMAL TO CULVERT
SECTION THRU WINGWALL
DETAIL K
SECTION LL
SECTION THRU BARREL
CONCRETE BOX CULVERT
DOUBLE BARREL
1 of 5
290

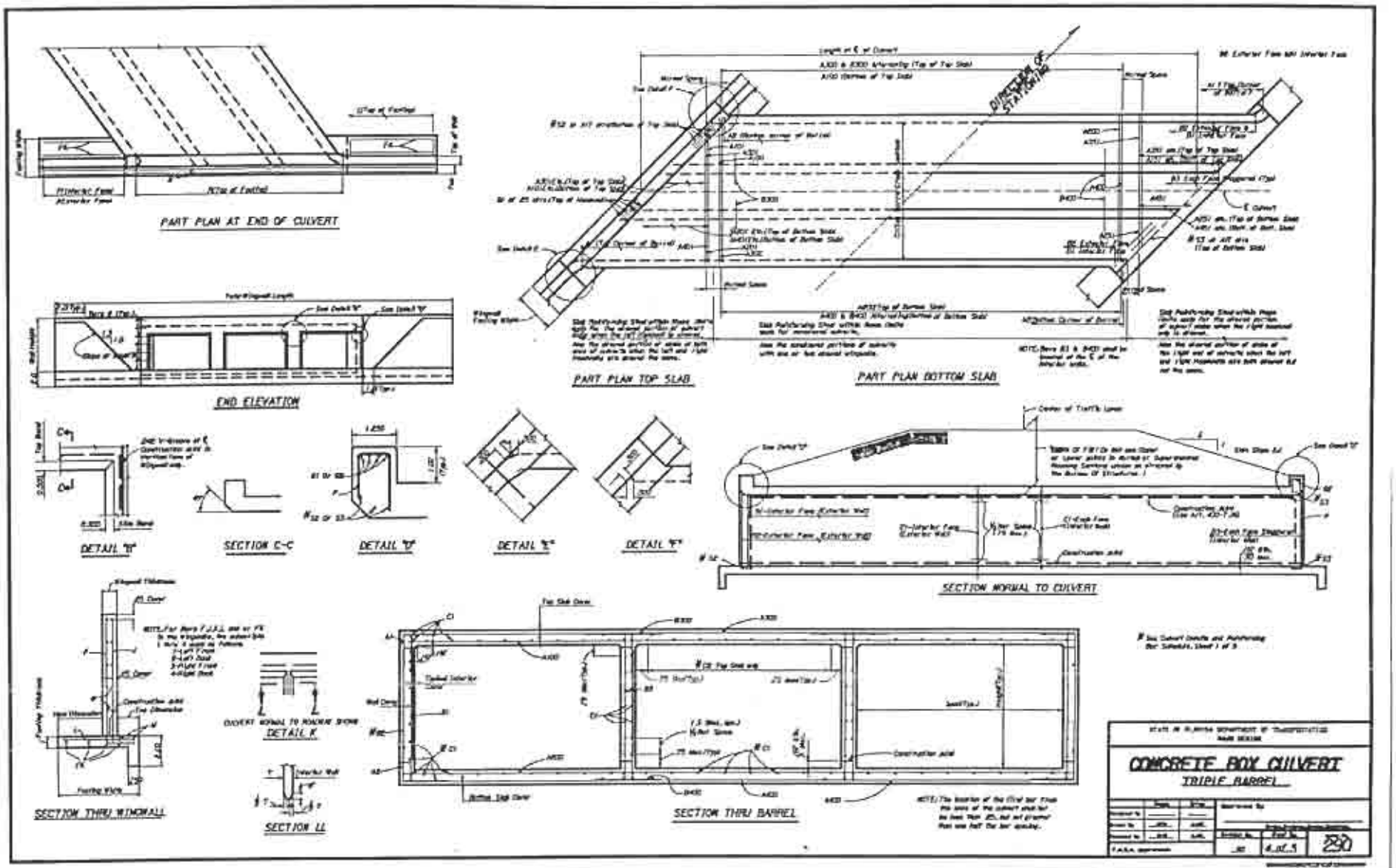

J:/DGN/CUL4.DGN May. 16, 1991 17:07:12

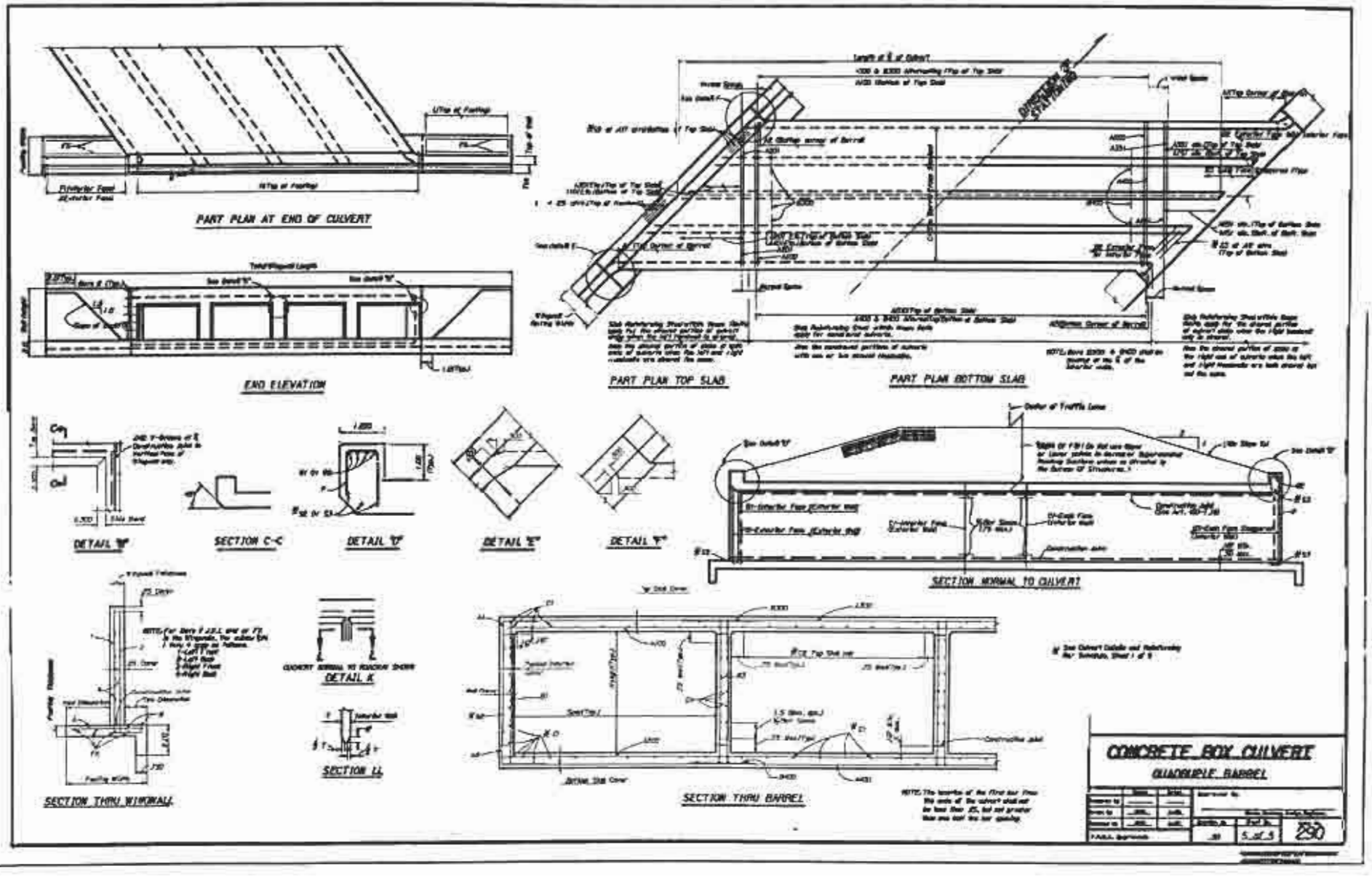
PART PLAN AT END OF CULVERT
END ELEVATION
PART PLAN TOP SLAB
PART PLAN BOTTOM SLAB
DETAIL "B"
SECTION C-C
DETAIL "D"
DETAIL "E"
DETAIL "F"
SECTION NORMAL TO CULVERT
SECTION THRU WINGWALL
DETAIL K
SECTION L-L
SECTION THRU BARREL
CONCRETE BOX CULVERT
QUADRUPLE BARREL
5 of 5
290

APPENDIX E
BLANK INPUT CODING FORMS

FLORIDA DEPARTMENT OF TRANSPORTATION BOX CULVERT AND WINGWALL DESIGN

1	ENVIRONMENT
1	73
1	

PROGRAM NAME: PSTDSN55 (VERSION 2.3) 7-31-92

CODING INSTRUCTIONS :

1. CODE CARDS 3 AND 4 FOR EACH CULVERT DESIGN AND DO NOT PLACE ZEROS IN ANY COLUMN IF IT IS NOT A SIGNIFICANT DIGIT.
2. WHEN FIXED VALUES ARE DESIRED FOR SLAB AND WALL THICKNESS (AS IN MUTIPLE BOWLVERT EXTENSIONS). THICKNESS VALUES CODED IN COLUMN 30 THROUGH 49 OF CARD 3 MUST BE FOLLOWED BY AN "F" IN THE APPROPRIATE COLUMN.
3. IF ENVIRONMENT CONDITION IS SLIGHTLY AGGRESSIVE, CARD 1 CAN BE OMITTED.
4. CARD 4 COLUMN 34, CULVERT EXTENSION, CODE 2 FOR LEFT EXTENSION, 3 FOR RIGHT EXTENSION, 4 FOR CONNECTING EXISTING CULVERTS.

3	CULVERT NO.	NO. OF BOXES	CLEAR SPAN (FT)	CLEAR HEIGHT (FT)	DESIGN FILL (FROM BOTTOM OF TOP SLAB) (FT)	LENGTH ALONG CENTERLINE (FT)	SKEW ANGLES LEFT	SKEW ANGLES RIGHT	NO FLOOR=X,N	TOP SLAB THICKNESS (9.0 IN.)	TOP SLAB FIX=F	BOTTOM SLAB THICKNESS (9.0 IN.)	BOTTOM SLAB FIX=F	EXT. WALL THICKNESS (9.0 IN.)	EXT. WALL FIX=F	INT. WALL THICKNESS (9.0 IN.)	INT. WALL FIX=F
1	2 3	4	5 6 7 8	9 10 11 12	13 14 15 16 17	18 19 20 21 22	23 24 25	26 27 28	29	30 31 32 33	34	35 36 37 38	39	40 41 42 43	44	45 46 47 48	49
3																	

4	CULVERT NO.	MINIMUM KEY	WINGWALL TYPE	WINGWALL SKEW ANGLE LEFT FRONT	WINGWALL SKEW ANGLE LEFT BACK	WINGWALL SKEW ANGLE RIGHT FRONT	WINGWALL SKEW ANGLE RIGHT BACK	WINGWALL SKEW LENGTH LEFT FRONT	WINGWALL SKEW LENGTH LEFT BACK	WINGWALL SKEW LENGTH RIGHT FRONT	WINGWALL SKEW LENGTH RIGHT BACK	CULVERT EXTENSION	NO. OF HEADWALLS	W. W. FRONT FACE COVER	W. W. OTHER FACE COVER	PROJECT NUMBER	LOCATION
1	2 3	4	5	6 7 8	9 10 11 12	13 14 15 16 17	18 19 20 21 22	23 24 25	26 27 28	29	30 31 32 33	34	35	36 37	38 39	40 41 42 43 44	45 46 47 48 49 50 51 52 53 54 55 56 57 58 59 60 61 62 63 64 65 66 67 68 69 70 71 72 73 74 75 76 77 78 79 80
4																	
3																	
4																	
3																	
4																	
3																	
4																	
3																	
4																	
3																	
4																	

FLORIDA DEPARTMENT OF TRANSPORTATION BOX CULVERT AND WINGWALL DESIGN

PROGRAM NAME: PSTDSN55 (VERSION 2.3) 7-31-92

*	RUN	NAME FIRST	NAME LAST	PHONE	FREE STYLE HEADING
1	2	3	4–22	23–28	29–80
*					

1	REG. LIVE LOAD CODE *	REG. LIVE LOAD OMIT 3 M	REG. LIVE LOAD @ FILL	REG. LIVE LOAD OVERLOAD STANDARD AXLE WEIGHT (LB.)	SERVICE/LOAD FACT 10TH POINT M & S	INFLU. LINE	POSITION OF DESIGN NEGATIVE MOMENT	SOIL WEIGHT (120) (PCF)	REINF. YIELD STR. (60,000) (PSI)	ALLOWABLE STEEL STRESS (24,000) (PSI)	COMPR. STR. OF CONC. (3400) (PSI)	ALLOWABLE CONC. SHEAR STRESS	ALLOW. CONC. SHEAR STRESS WITH STIRRUP	THICKNESS INCREMENT SLAB (0.5IN)	THICKNESS INCREMENT WALL (0.5IN)	CONCRETE COVER EXTERIOR TOP SLAB	CONCRETE COVER EXTERIOR BOTT. SLAB	CONCRETE COVER EXTERIOR WALL SLAB	CONCRETE COVER INTERIOR	SAME SLAB	SAME WALL	BAR SCHEDULE	BAR SPACING MAX. (18 IN)	BAR SPACING MIN. (4 IN)	BAR SIZE MAX. =11	BAR SIZE MIN. =4	N= 9.0	ENVIRONMENT
1	2	3	4	5–9	10	11	12	13–22	23–28	29–33	34–38	39–44	45–49	50–53	54–56	57	58	59	60–65	66–69	70–73							
1																												

#	CODE
1	HS20
2	H 20
3	HS15
4	H 15
5	HS10
6	H 10
8	SPCL
9	NONE

2	EXTRA UNIFORM LOAD (K/FT)	EXTRA CONCENTRATE LOAD LOAD NO. 1 WEIGHT (KIP)	LOAD NO. 1 POSITION (FT)	LOAD NO. 2 WEIGHT (KIP)	LOAD NO. 2 POSITION (FT)	LOAD NO. 3 WEIGHT (KIP)	LOAD NO. 3 POSITION (FT)	SPL ALT. LIVE LOAD WHEEL LOAD (KIP)	EARTH FILL ABOVE SLAB (FT)	OVER-STRESS FACTOR (1.0)
1	2	3–5	6–12	13–17	18–22	23–27	28–32	33–37	38–42	43–47
2										

P	(0.02) MAX. STEEL RATIO $p = \frac{A_s}{bd}$
1	2–4

3	CULVERT NO.	NO. OF BOXES	CLEAR SPAN (FT)	CLEAR HEIGHT (FT)	DESIGN FILL (FROM BOTTOM OF TOP SLAB) (FT)	LENGTH ALONG CENTERLINE (FT)	SKEW ANGLES LEFT	SKEW ANGLES RIGHT	NO FLOOR=X,H	TOP SLAB THICKNESS (9.0 IN)	TOP SLAB FIX=F	BOTTOM SLAB THICKNESS (9.0 IN)	BOTTOM SLAB FIX=F	EXT. WALL THICKNESS (9.0 IN)	EXT. WALL FIX=F	INT. WALL THICKNESS (9.0 IN)	INT. WALL FIX=F	LIVE LOAD SURCHARGE (2.0 FT.)	SOIL PRES. MAXIMUM (30 PCF)	SOIL PRES. MINIMUM (15 PCF)	WATER PRESSURE (62.4 CPF)	HAUNCH TOP (IN.) (2.0)	HAUNCH BOTT. (IN.) (0.0)	HAUNCH	COMMENTS	SPECIAL PRINT
1	2	3	4	5–8	9–12	13–17	18–22	23–28	29	30–34	35	36–39	40	41–44	45	46–49	50	51–52	53–56	57	58–59	60–65	66	67–69	70–79	80
3																										

4	CULVERT NO.	MINIMUM KEY	WINGWALL TYPE	WINGWALL SKEW ANGLE LEFT FRONT	WINGWALL SKEW ANGLE LEFT BACK	WINGWALL SKEW ANGLE RIGHT FRONT	WINGWALL SKEW ANGLE RIGHT BACK	WINGWALL SKEW LENGTH LEFT FRONT	WINGWALL SKEW LENGTH LEFT BACK	WINGWALL SKEW LENGTH RIGHT FRONT	WINGWALL SKEW LENGTH RIGHT BACK	CULVERT EXTENSION	NO. OF HEADWALLS	W. W. FRONT FACE COVER	W. W. OTHER FACE COVER	PROJECT NUMBER	LOCATION
1	2	3	4	5	6–8	9–12	13–17	18–22	23–27	28–32	33	34	35	36	37–39	40–49	50–80
4																	

INDEX

allowable shear 60
axle 20, 60
axle weight 6
bar schedule 19, 23, 34, 35, 41, 47, 58
block 56
Boundary . . . . . iv, 1
    contitions 1
check 20, 59
compressive stress 57
cover 22, 30, 39, 44, 56, 57, 63
crack control 14
critical sections 60, 61
dead load 24, 57
degree of freedom 60
environment 22, 40, 41, 46, 47
extension 30, 56
fatigue stress limits 14
fill 20, 24, 25, 57, 59, 60, 63
force matrix 57, 60
haunch 27, 31, 39, 44, 56, 59, 61
headwall 25, 27-31, 37, 39-42, 44, 46-48, 59-62
height . . . vii, 6, 15, 16, 20, 25, 29, 31, 36, 37, 39, 40, 44, 46, 56-58, 60-63
influence lines 21, 50-53
internal matrix 5
lateral displacement 1
level . . . . . vii, 14
linear 7
live load 6, 20, 24, 39, 44, 59, 62
live load surcharge 27, 61
load 6, 20, 24, 39, 44, 57-59, 62
load factor design 10, 21, 32, 61
matrix . . . . . iv, 1-5, 56, 57, 59-61, 63
member . . . . . iv, 1-8, 10, 31, 33, 34, 50, 52, 53, 57, 59, 60
member reference 34
method . . . . . vii, 1, 2, 5, 21, 58
minimum . . . . . vii, 8, 14, 15, 23, 26-28, 31, 59
moment 7, 15, 27, 32, 39, 44, 49, 50, 56-60, 62
pressure 6, 27, 40, 46, 58, 60, 61
range 14
reinforcement ratio 13, 24, 56, 60
service load design 7, 21, 32, 61, 62
shear 6, 8, 13, 21, 31-34, 39, 44, 49, 52, 58-62
skew angle 25, 28, 29, 40, 46, 59, 60
slab 24, 25, 39, 41, 44, 47, 56, 57, 59-62
slenderness 15
soil weight 21
span . . . . . vii, 6, 20, 25, 33, 36, 37, 39, 40, 44, 46, 59-62
steel 7, 8, 10, 14, 21-23, 32, 39-42, 44, 46-48, 56, 61
Stiffness 1
    matrix 2, 56
    method 1
stiffness matrix . . . . . iv, 56
stress 21, 57, 58, 60, 33
    allowable 14
    block 7, 56
    check 20

compressive 32, 57
concrete 8, 10, 21, 32
fatigue 14, 57
level 14
linear 7
minimum 14
range 14
service load 14
shear 8, 13, 21, 31-33, 58, 60
steel 7, 21
tensile 58
Stresses 1
tension 8
tensile 14, 58
tension 7, 8, 10, 14, 32, 33, 56
tension steel 10
thickness 22, 26, 40, 46, 58, 61
tie-in length 30
truck 6, 20, 32, 60
wall 12, 22, 25, 30, 39-41, 44, 46, 47, 57, 59, 62, 63
water 6, 10, 27, 31, 39, 44, 57, 60
Weight 6, 20, 21, 24, 27, 31, 41, 42, 47, 48, 57, 60-63
wheel loads 6
width 6, 31, 40, 46, 56-59, 61, 62
wingwall 17, 18, 29, 30, 39, 40, 42, 44, 46, 48, 56, 58, 61-63
wingwall skew angle 28, 29

FLORIDA DEPARTMENT OF TRANSPORTATION
STRUCTURES DESIGN OFFICE / COMPUTER SECTION
Computer Program User's Comments and Suggestions

Program Name: Reinforced Concrete Box Culvert & Wingwall Design & Analysis

Method of Solution: _____

_____

_____

_____

_____

Documentation: _____

_____

_____

_____

_____

Input/Output: _____

_____

_____

_____

User's Name: _____

Company: _____

Adress: _____

Telephone: _____ **Fax:** _____

Mail to : Structures Design Office
Florida Department of Transportation
605 Suwannee St., MS 33
Tallahassee, Florida 32399-0450
Attn: Liang Y. Hsia, P.E.
Tel: (904) 488-6424, Fax: (904) 488-6352

November 1992