FED. ROAD DIV. NO.	STATE	PROJECT NO.	FISCAL YEAR	SHEET NO.
3	FLA.			

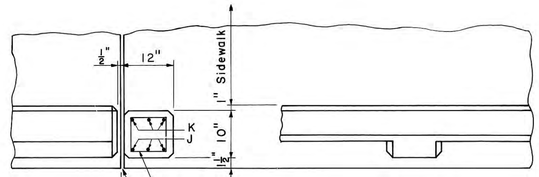

NOTE: Concrete End Post shall be paid for at the Contract Unit Price for Concrete (Substr.) and Reinforcing Steel (Substr.) For Details of End Post see Details of End Bents.

End of Bridge

For Payment, Handrail shall be measured to this point.

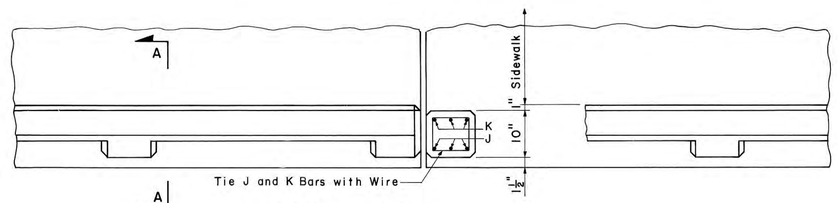

PLAN OF POST

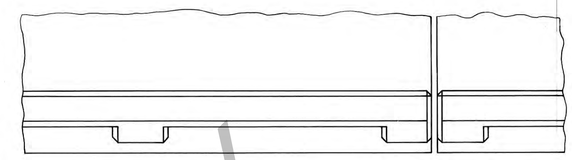

INTERMEDIATE SPAN

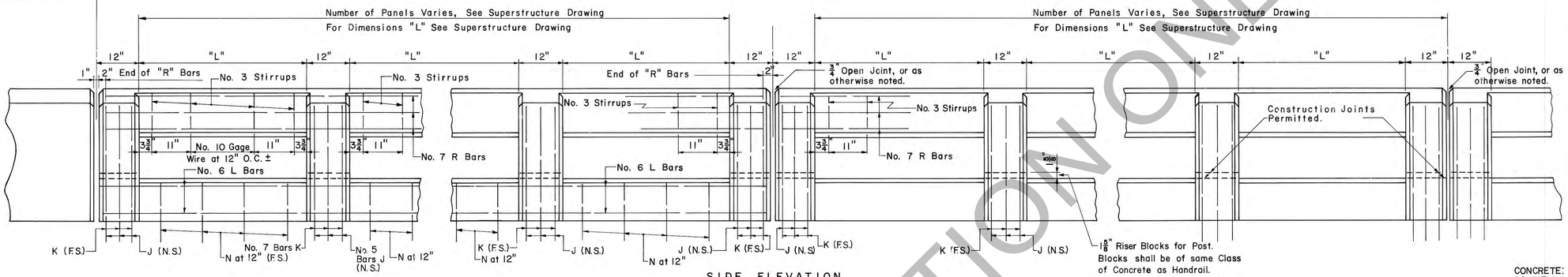

SIDE ELEVATION

BENDING DIAGRAMS

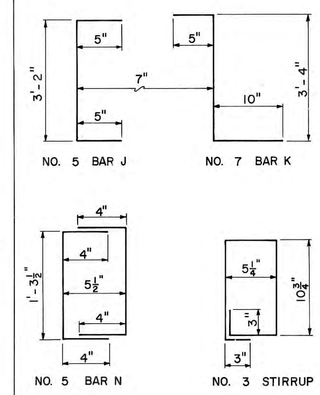

NOTE: All bar dimensions are out-to-out.

GENERAL NOTES

CONCRETE: Class III Concrete shall be used in Handrail.

PAYMENT: Handrail shall be paid for per linear foot, which shall include all Concrete and Reinforcing Steel. Handrail shall be measured along the center line of Rail.

CHAMFER: 3/4" Chamfer all edges of Handrails and Post.

MARKERS: Markers recording the Elevation shall be placed on top of the Curbs at End Bents. On Bridges longer than 100 feet, one marker shall be placed at each end of the Bridge. On Bridges less than 100 feet long, one marker shall be placed at one end of the Bridge only. Markers are to be furnished by the Department of Transportation and installed by the Contractor. The cost of installing the Markers shall be included in the Contract Unit Price for Concrete Handrail.

PANEL LENGTHS: Dimension "L" shall not exceed 7'-0".

CYLINDER STRENGTH: The Cylinder Strength of the Concrete shall be 3,750 p.s.i. minimum, at twenty eight days.

ANCHOR BOLTS: Anchor Bolts, Nuts and Washers shall be Hot Dip Galvanized in accordance with A.S.T.M. A-123.

REINFORCING STEEL: GRADE 60 OR GRADE 40.

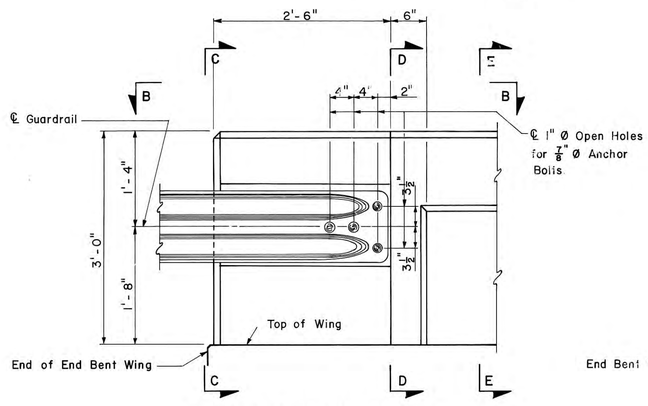

ELEVATION OF END POST
(Showing Guardrail Attachments)

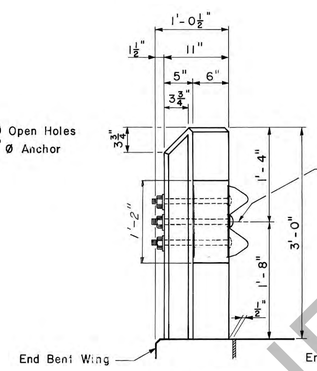

VIEW C-C

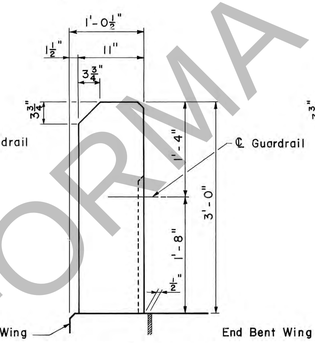

SECTION D-D

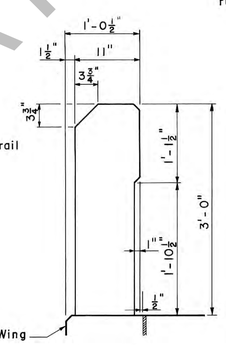

SECTION E-E

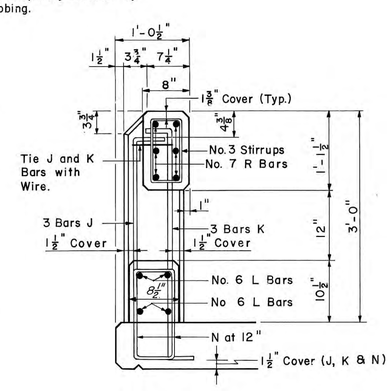

SECTION A-A

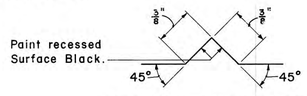

SECTION THRU RECESSED "V" GROOVE TO FORM INSCRIBED LETTERS & FIGURES

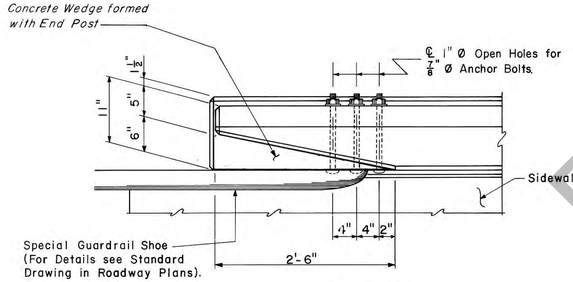

VIEW B-B

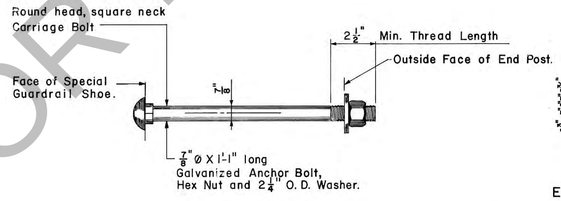

ANCHOR BOLT DETAIL

NOTE: Cost of Anchor Bolts to be included in the Contract Unit Price for Guardrail.

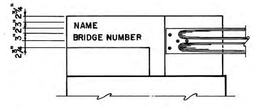

ELEVATION OF HANDRAIL POST
(Showing Name And Bridge Number)

NOTE: The Name and Bridge Number to be placed on End Bent End Post shall be seen on the drivers right when approaching bridge unless otherwise detailed.

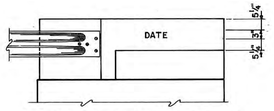

ELEVATION OF HANDRAIL POST
(Showing Date)

NOTE: The Date to be placed on End Bent End Posts shall be seen on the drivers left when approaching bridge unless otherwise detailed. The Date shall be the year the Bridge is constructed.

NOTE: Black Plastic Letters and Figures, 3" in height as approved by the Engineer, may be used in lieu of Letters and Figures formed by 3/8" V-Grooves. "V" Grooves shall be formed by preformed Letters and Figures.

REVISIONS	
Dates	Descriptions
5-3-73	Revised class of concrete.
2-6-74	Deleted Wood Wedge and Added Concrete Wedge
9-16-75	Added Bridge Number to End Bent End Post.

STATE OF FLORIDA DEPARTMENT OF TRANSPORTATION
STRUCTURES

CONCRETE HANDRAIL

ROAD NO.	COUNTY	PROJECT NO.

	Names	Dates
Designed by	R.D.S.	9-69
Checked by	C.W.B.	9-69
Quantities by		
Checked by		
Supervised by		

APPROVED BY

Deputy Design Engineer, Structures

Drawing No.	Index No.
1 of 1	10266

FOR INFORMATION ONLY

Dietzgen 138M-3 "Ageproof Film"