FLORIDA DEPARTMENT OF TRANSPORTATION

STRUCTURES DESIGN GUIDELINES

FDOT STRUCTURES MANUAL
VOLUME 1
JANUARY 2012

Structures Design
Florida's Transportation Engineers

Table of Contents

Table of Contents i
Introduction I-1
I.1 General I-1
I.2 Format I-1
Table I.3-1 Cross Reference between AASHTO LRFD & SDG. I-2
Table I.3-2 Cross Reference between AASHTO LRFD-MHBD& SDG I-5
1 General Requirements 1-1
1.1 General 1-1
1.1.1 Design Review. 1-1
1.1.2 Substructure and Superstructure Definitions. 1-1
1.1.3 Clearances (Rev. 01/12) 1-1
1.1.4 Bridge Height Classifications. 1-1
1.1.5 Buy America Provisions. 1-2
1.1.6 ADA on Bridges 1-2
1.1.7 Design Life. 1-2
1.2 Deflection and Span-to-Depth Ratios [2.5.2.6] 1-2
1.3 Environmental Classifications 1-2
1.3.1 General 1-2
1.3.2 Classification Criteria. 1-3
Table 1.3.2-1 Criteria for Substructure Environmental Classifications 1-4
1.3.3 Chloride Content 1-4
Table 1.3.3-1 Chloride Intrusion Rate/Environmental Classification 1-5
Figure 1.3.3-1 Flow Chart for Environmental Classification of Structures 1-6
1.4 Concrete and Environment [5.12.1] 1-6
1.4.1 General (Rev. 01/12) 1-6
1.4.2 Concrete Cover (Rev. 01/12). 1-7
Figure 1.4.2-1 End Bent (All Environments) 1-7
Figure 1.4.2-2 Piers (All Environments) (1 of 3) 1-7
Figure 1.4.2-3 Piers (All Environments) (2 of 3) 1-8
Figure 1.4.2-4 Piers (All Environments) (3 of 3) 1-8
Figure 1.4.2-5 Pier Cap and Intermediate Bent (All Environments). 1-9
Figure 1.4.2-6 Cast -in-Place slab beam supported superstructure (All environments). 1-9
Table 1.4.2-1 Concrete Cover 1-10
1.4.3 Class and Admixtures 1-11
Table 1.4.3-1 Structural Concrete Class Requirements 1-11
1.4.4 Mass Concrete (Rev. 01/12) 1-12
1.5 Existing Hazardous Material (Rev. 01/12). 1-13
1.6 Post-Installed Anchor Systems (Rev. 01/12). 1-14
1.6.1 General 1-14
1.6.2 Adhesive-Bonded Anchors and Dowels Systems 1-14
Figure 1.6.2-1 Effective Tensile Stress Areas of Adhesive Anchors 1-20
Figure 1.6.2-2 Effective Shear Stress Areas of Adhesive Anchors 1-20
1.6.3 Undercut Anchor Systems. 1-21

1.7 Load Rating 1-21
1.8 Post-Design Services 1-21
1.9 Miscellaneous Attachments to Bridges (Rev. 01/12) 1-22
2 Loads and Load Factors 2-1
2.1 General 2-1
2.1.1 Load Factors and Load Combinations [3.4.1] 2-1
2.1.2 Live Loads [3.6] 2-1
2.2 Dead Loads 2-1
Table 2.2-1 Miscellaneous Dead Loads 2-2
2.3 Seismic Provisions [3.10.9][3.10.9.2][4.7.4] 2-4
2.3.1 General 2-4
2.3.2 Seismic Design for Widenings 2-4
2.3.3 Lateral Restraint 2-4
2.4 Wind Loads (Rev. 01/12) 2-4
2.4.1 Wind Pressure on Structures: WS 2-5
Table 2.4.1-1 Load Factors 2-5
Table 2.4.1-2 Basic Wind Speed, V 2-6
Table 2.4.1-3 Wind Pressure Factors for Various Angles of Attack 2-7
2.4.2 Wind Loads on Other Structures 2-8
2.4.3 Wind Loads During Construction 2-8
Table 2.4.3-1 Load Factors During Construction 2-8
Table 2.4.3-2 Pressure Coefficient During Construction 2-9
2.5 Wave Loads 2-9
2.6 Vehicular Collision Force [3.6.5] 2-10
2.6.1 General 2-10
2.6.2 End Bents and Retaining Walls 2-10
2.6.3 New Structures Over or Adjacent to Roadways 2-11
2.6.4 Roadway Work Beneath or Adjacent to Existing Structures (Rev. 01/12) . 2-11
2.6.5 Widening of Existing Structures Over or Adjacent to Roadways 2-12
2.6.6 Bridge Superstructures Adjacent to Piers of Other Bridges 2-12
2.6.7 Structures Over or Adjacent to Railroad and Light Rail Tracks 2-12
2.6.8 Design and Analysis Methods (Rev. 01/12) 2-14
2.7 Force Effects due to Superimposed Deformations [3.12] 2-15
2.7.1 Uniform Temperature (Rev. 01/12) 2-15
Table 2.7.1-1 Temperature Range by Superstructure Material 2-15
2.7.2 Temperature Gradient [3.12.3] 2-15
2.8 Barriers and Railings [4.6.2.2] 2-15
2.8.1 Distribution for Beam-Slab Bridges 2-15
2.8.2 Limit State Checks 2-15
2.9 Live Load Distribution Factors [4.6.2.2][4.6.3.1] (Rev. 01/12) 2-16
2.10 Redundancy and Operational Importance[1.3.4 and 1.3.5] (Rev. 01/12) . . . 2-17
2.11 Vessel Collision [3.14] 2-18
2.11.1 General [3.14.1] 2-18
2.11.2 Research and Information Assembly 2-18
2.11.3 Design Vessel [3.14.4][3.14.5.3] 2-19
2.11.4 Design Methodology - Damage Permitted [3.14.13] 2-19

2.11.5 Widenings 2-20
2.11.6 Movable Bridges 2-20
2.11.7 Main Span Length 2-20
2.11.8 Scour with Vessel Collision [3.14.1] 2-21
2.11.9 Application of Impact Forces [3.14.14] 2-21
Figure 2.11.9-1 Application of Longitudinal Vessel Impact Force on Long Footings 2-22
2.11.10 Impact Forces on Superstructure [3.14.14.2] 2-22
2.12 Substructure Limit States (Rev. 01/12) 2-22
3 Substructure, Retaining Walls and Sound Barriers (Rev. 01/12) 3-1
3.1 General (Rev. 01/12) 3-1
3.2 Geotechnical Report 3-1
3.3 Foundation Scour Design [2.6] (Rev. 01/12) 3-2
3.4 Lateral Load [10.7.3.12][10.8.3.8] 3-3
3.5 Driven Piles 3-3
3.5.1 Prestressed Concrete Piles [5.13.4.4] (Rev. 01/12) 3-3
3.5.2 Concrete Cylinder Piles 3-4
3.5.3 Steel Piles and Wall Anchor Bars 3-4
Table 3.5.3-1 Table of Additional Sacrificial Steel Thickness Required (inches) 3-5
3.5.4 Minimum Pile Spacing and Clearances [10.7.1.2] 3-7
3.5.5 Downdrag [10.7.1.6.2] 3-7
3.5.6 Resistance Factors [10.5.5] 3-8
Table 3.5.6-1 Resistance Factors for Piles (all structures) 3-8
3.5.7 Battered Piles [10.7.1.4] 3-9
3.5.8 Minimum Tip Elevation [10.7.6] 3-9
3.5.9 Anticipated Pile Lengths [10.7.3.3] 3-10
3.5.10 Test Piles [10.7.9] (Rev. 01/12) 3-10
3.5.11 Load Tests [10.7.3.8][10.8.3.5.6] 3-11
3.5.12 Pile Driving Resistance [10.7.3.8.6] (Rev. 01/12) 3-12
Table 3.5.12-1 Maximum Pile Driving Resistance 3-12
3.5.13 Pile Jetting and Preforming 3-13
3.5.14 Pile Data Table 3-13
3.5.15 Plan Notes 3-14
3.5.16 Fender Piles 3-14
3.5.17 Concrete Piling Spliced with Steel Devices 3-14
3.6 Drilled Shaft Foundations 3-14
3.6.1 Minimum Sizes (Rev. 01/12) 3-14
3.6.2 Downdrag (Rev. 01/12) 3-14
3.6.3 Resistance Factors [10.5.5] (Rev. 01/12) 3-15
Table 3.6.3-1 Resistance Factors for Drilled Shafts (Bridge Foundations) . . . 3-15
3.6.4 Minimum Tip Elevation [10.8.1.5] 3-16
3.6.5 Load Tests 3-16
3.6.6 Drilled Shaft Data Table (Rev. 01/12) 3-17
3.6.7 Plan Notes 3-17
3.6.8 Construction Joints 3-18
3.6.9 Nonredundant Drilled Shaft Foundations (Rev. 01/12) 3-18

3.6.10 Minimum Reinforcement Spacing [5.13.4.5.2, 10.8.3.9.3]. 3-19
3.7 Cofferdams and Seals. 3-19
Table 3.7-1 Cofferdam Design Values. 3-19
3.8 Spread Footings [10.5.5][10.5.6]. 3-20
3.9 Mass Concrete (Rev. 01/12) 3-20
3.10 Crack Control (Rev. 01/12) 3-20
3.11 Pier, Column, and Footing Design (Rev. 01/12) 3-21
Table 3.11-1 Required tendons for post-tensioned substructure elements . . . 3-22
3.12 Retaining Wall Types (Rev. 01/12) 3-23
Table 3.11-2 Minimum Center-to-Center Duct Spacing. 3-23
Figure 3.12-1 Retaining Wall Types 3-24
Figure 3.12-2 Permanent Retaining Wall Selection Process Flowchart 3-25
Table 3.12-1 Design Standards Relation to FDOT Wall Types 3-26
3.12.1 Cast-in-Place (CIP) Walls 3-26
Figure 3.12.1-1 Cast-In-Place Wall (Fill Location) 3-27
Figure 3.12.1-2 Cast-In-Place Wall (Cut Location) 3-27
3.12.2 Pile Supported Walls 3-27
Figure 3.12.2-1 Cast-In-Place Wall - Pile Supported (Fill Location) 3-28
Figure 3.12.2-2 Cast-In-Place Wall - Pile Supported (Cut Location) 3-28
3.12.3 Mechanically Stabilized Earth (MSE) Walls. 3-28
Figure 3.12.3-1 MSE Wall (Fill Location) 3-29
Figure 3.12.3-2 MSE Wall (Cut Location) 3-30
3.12.4 Precast Counterfort Walls 3-30
Figure 3.12.4-1 Precast Counterfort Wall 3-30
3.12.5 Steel Sheet Pile Walls 3-30
Figure 3.12.5-1 Tieback Components (Steel Sheet Piles). 3-31
3.12.6 Concrete Sheet Piles. 3-31
Figure 3.12.6-1 Concrete Sheet Pile Bulkhead 3-32
3.12.7 Temporary MSE Walls. 3-32
Figure 3.12.7-1 Wire-Faced - MSE Wall (For Temporary Wall Only) 3-32
3.12.8 Soil Nails 3-33
Figure 3.12.8-1 Soil Nail Wall 3-33
3.12.9 Soldier Pile/Panel Walls 3-33
Figure 3.12.9-1 Soldier Pile / Panel Wall 3-33
3.12.10 Modular Block Walls 3-33
3.12.11 Permanent - Temporary Wall Combination 3-34
Figure 3.12.11-1 Tieback Components (Soldier Piles) 3-34
3.12.12 Geosynthetic Reinforced Soil (GRS) Walls and Abutments (Rev. 01/12) 3-35
3.13 Retaining Wall Design. 3-35
3.13.1 General (Rev. 01/12) 3-35
3.13.2 Mechanically Stabilized Earth Walls [11.10] (Rev. 01/12) 3-36
Figure 3.13.2-1 Design Criteria for Acute Corners of MSE Bin Walls 3-37
Figure 3.13.2-2 MSE Wall Minimum Front Face Embedment 3-38
Figure 3.13.2-3 Broken Backfill with Traffic Surcharge 3-39
Figure 3.13.2-4 Broken Backfill without Traffic Surcharge. 3-40
Figure 3.13.2-5 Proprietary Retaining Walls 3-41

3.13.3 Permanent and Critical Temporary Sheet Pile Walls 3-45
3.14 Fender Systems (Rev. 01/12) 3-46
3.14.1 General 3-46
Figure 3.14.1-1 Required Freestanding Pile Heights. 3-47
3.14.2 EOR's Design Procedure 3-48
Table 3.14.2-1 Table of Past Points and associated Minimum Energies 3-49
3.14.3 Polymeric Pile Supplier Engineer's Development Procedure 3-51
3.14.4 Ladders and Platforms 3-53
3.14.5 Navigation Lighting Details 3-53
3.15 Concrete Box and Three-Sided Culvert Design 3-54
3.15.1 General 3-54
3.15.2 Design Method (Rev. 01/12) 3-54
3.15.3 Load Modifiers and Load Factors [3.4.1] [12.5.4] 3-54
3.15.4 Dead Loads and Earth Pressure [3.5] [3.11.5] [3.11.7] 3-54
3.15.5 Live Load 3-55
3.15.6 Wall Thickness Requirements 3-55
3.15.7 Concrete Strength and Class 3-55
3.15.8 Reinforcement 3-56
3.15.9 Reinforcement Details 3-57
3.15.10 Skewed Culverts 3-57
3.15.11 Deflection Limitations [2.5.2.6.2] 3-57
3.15.12 Analysis and Foundation Boundary Conditions. 3-57
3.15.13 Span-to-Rise Ratios 3-58
3.15.14 Load Rating Requirements 3-58
3.16 Sound Barrier Design (Rev. 01/12) 3-59
3.16.1 Scope [15.1] 3-59
3.16.2 General Features - Panel Height [15.4] and Post Spacing 3-59
3.16.3 General Features - Concrete Strength and Class [15.4] 3-59
3.16.4 Wind Loads [3.8.1][15.8.2]. 3-59
3.16.5 Vehicular Collision Forces [15.8.5] 3-59
3.16.6 Foundation Design [15.9] 3-60
3.16.7 Resistance Factors [15.9.5]. 3-60
3.16.8 Lateral Earth Pressures [3.11.5.10]. 3-60
4 Superstructure - Concrete 4-1
4.1 General 4-1
4.1.1 Concrete Cover 4-1
4.1.2 Reinforcing Steel [5.4.3] 4-1
4.1.3 Girder Transportation (Rev. 01/12) 4-1
4.1.4 Shear Design [5.8.3] 4-1
4.1.5 Minimum Reinforcement Requirements [5.7.3.3.2] 4-2
4.1.6 Dapped Beam Ends 4-2
4.1.7 Continuity of Precast Beams (Rev. 01/12). 4-2
4.1.8 Crack Control (Rev. 01/12) 4-2
4.2 Deck Slabs [5.13.1][9.7] 4-3
4.2.1 Bridge Length Definitions 4-3
4.2.2 Deck Thickness Determination (Rev. 01/12) 4-3

4.2.3 Grooving Bridge Decks 4-4
4.2.4 Deck Slab Design [9.7.2][9.7.3] 4-4
4.2.5 Traffic Railing Design Requirements 4-5
4.2.6 Reinforcing Steel over Intermediate Piers or Bents. 4-6
4.2.7 Minimum Negative Flexure Slab Reinforcement [6.10.1.7] 4-7
4.2.8 Crack Control in Continuous Decks [5.10.8] 4-7
Table 4.2.8-1 Deck Concrete Strength Gain Values 4-7
4.2.9 Concrete Decks on Continuous Steel Girders. 4-9
4.2.10 Skewed Decks [9.7.1.3]. 4-9
4.2.11 Temperature and Shrinkage Reinforcement 4-9
4.2.12 Stay-in-Place Forms 4-9
4.2.13 Thickened Slab End Requirements. 4-10
4.2.14 Phase Constructed Decks (Rev. 01/12) 4-10
4.3 Pretensioned Beams. 4-10
4.3.1 General 4-10
Table 4.3.1-1 Concrete Classes and Strengths. 4-12
4.3.2 Beam Camber/Build-Up over Beams 4-13
4.3.3 Florida Bulb-T Beams and Florida-I Beams [5.14.1.2.2] 4-13
4.3.4 Temporary Bracing (Rev. 01/12) 4-13
4.4 Precast, Prestressed Slab Units [5.14.4.3] 4-15
4.5 Post-Tensioning, General [5.14.2] 4-15
4.5.1 Integrated Drawings 4-15
4.5.2 Prestress 4-16
4.5.3 Material 4-16
4.5.4 Expansion Joints 4-16
4.5.5 Ducts, Tendons and Anchorages 4-17
Table 4.5.5-1 Minimum Center-to-Center Duct Spacing 4-18
Table 4.5.5-2 Minimum Tendon Radius. 4-20
Table 4.5.5-3 Min. Tendons Required for Critical Post-tensioned Sections . . 4-20
4.5.6 Minimum Dimensions (Rev. 01/12) 4-21
Table 4.5.6-1 Dimensions for sections containing post-tensioning tendons . . 4-21
4.5.7 Corrosion Protection 4-21
4.5.8 Erection Schedule and Construction System (Rev. 01/12) 4-22
4.5.9 Final Computer Run 4-23
4.5.10 Epoxy Joining of Segments. 4-23
4.5.11 Principal Tensile Stresses [5.8.5] [5.9.4.2.2] [5.14.2.3.3] 4-23
4.5.12 Maximum Duct Dimensions for Detailing. 4-23
4.6 Post-Tensioned Box Girders. 4-24
4.6.1 Access and Maintenance (Rev. 01/12) 4-24
Table 4.5.12-1 Maximum Duct Dimensions for Detailing. 4-24
4.6.2 Prestress 4-26
4.6.3 Post-tensioning Anchorages (Rev. 01/12). 4-27
Figure 4.6.3-1 Deviator Diaphragm Detail 4-27
Figure 4.6.3-2 Inside Corner Detail at Pier Segments 4-27
4.6.4 Design Requirements for Cantilever Bridges with Fixed Pier Tables 4-28
4.6.5 Creep and Shrinkage [5.14.2.3.6] 4-28

4.6.6 Expansion Joints (Rev. 01/12) 4-28
Figure 4.6.6-1 Details at Expansion Joints 4-29
4.6.7 Construction Data Elevation and Camber Curve for Box Girders 4-29
4.6.8 Transverse Deck Loading, Analysis & Design (Rev. 01/12) 4-30
4.6.9 Span-by-Span Segmental Diaphragm Details 4-30
4.6.10 Analytical Methods for the Load Rating of Post-tensioned Box Girder Bridges 4-30
4.7 Pretensioned/Post-Tensioned Beams (Rev. 01/12) 4-31
5 Superstructure - Steel 5-1
5.1 General 5-1
5.1.1 Corrosion Prevention 5-1
5.1.2 Girder Transportation 5-1
5.1.3 Dapped Girder Ends 5-2
5.1.4 Deck Slabs 5-2
5.2 Dead Load Camber [6.7.2] 5-2
5.3 Structural Steel [6.4.1] 5-2
5.3.1 General (Rev. 01/12) 5-2
5.3.2 Testing 5-3
5.4 Bolts [6.4.3.1] 5-3
5.5 Minimum Steel Dimensions [6.7.3] 5-4
Table 5.5-1 Thickness Increments for Common Steel Plates 5-4
5.6 Box Sections 5-4
5.6.1 General 5-4
5.6.2 Access and Maintenance (Rev. 01/12) 5-4
5.6.3 Cross Frames [6.7.4] 5-6
5.6.4 Lateral Bracing [6.7.5] 5-6
5.6.5 Transverse Concrete Deck Analysis 5-6
5.7 Diaphragms and Cross Frames for "I-Girders" [6.7.4] 5-7
5.8 Transverse Intermediate Stiffeners [6.10.11.1] 5-7
5.9 Bearing Stiffeners [6.10.11.2] 5-7
5.10 Longitudinal Stiffeners [6.10.11.3] 5-8
5.11 Connections and Splices [6.13] (Rev. 01/12) 5-8
5.11.1 Slip Resistance [6.13.2.8] 5-8
5.11.2 Welded Connections [6.13.3] 5-8
5.11.3 Welded Splices [6.13.6.2] 5-9
5.12 Corrosion Protection 5-10
5.12.1 Environmental Testing for Site Specific Corrosion Issues 5-10
5.12.2 Inorganic Topcoat System 5-10
5.12.3 High Performance Topcoat System 5-10
5.12.4 Uncoated Weathering Steel 5-10
5.12.5 Galvanizing (Rev. 01/12) 5-11
6 Superstructure Components 6-1
6.1 General 6-1
6.2 Curbs and Medians [13.11] 6-1
6.3 Temperature Movement [3.12.2] 6-1
6.4 Expansion Joints 6-1

Table 6.4-1 Expansion Joint Width Limitations by Joint Type 6-1
6.4.1 Expansion Joint Design Provisions [14.5.1] 6-2
6.4.2 Movement [14.4] [14.5.3]. 6-2
6.4.3 Expansion Joints for Bridge Widenings 6-2
6.4.4 Bridge Widenings - Group 1 Expansion Joints 6-3
6.4.5 Bridge Widenings - Group 2 Joints 6-4
6.4.6 Post Tensioned Bridges 6-4
6.5 Bearings (Rev. 01/12) 6-4
6.5.1 Design (Rev. 01/12). 6-5
6.5.2 Maintainability 6-6
6.5.3 Lateral Restraint 6-6
6.6 Deck Drainage [2.6.6] 6-7
6.7 Traffic Railing [13.7] (Rev. 01/12) 6-7
6.7.1 General 6-7
6.7.2 Non-Standard or New Railing Designs 6-8
6.7.3 FHWA Policy 6-10
6.7.4 Existing Obsolete Traffic Railings (Rev. 01/12) 6-12
6.7.5 Historic Bridges 6-18
6.7.6 Requirements for Test Levels 5 and 6 [13.7.2] 6-19
6.7.7 Exceptions 6-19
6.7.8 Miscellaneous Attachments to Traffic Railings (Rev. 01/12) 6-20
6.7.9 Impact Loads for Railing Systems with Footings or on Retaining Walls [13.7.3.1.2] (Rev. 01/12) 6-20
Figure 6.7.9-1 Traffic Railing-Moment Slab System (Sliding and Overturning) 6-21
6.8 Erection Scheme and Beam/Girder Stability (Rev. 01/12) 6-22
6.9 Bridges with Sidewalks or Traffic Separators (Rev. 01/12) 6-22
7 Widening and Rehabilitation 7-1
7.1 General 7-1
7.1.1 Load Rating (Rev. 01/12). 7-1
Figure 7.1.1-1 Widening / Rehabilitation Load Rating Flow Chart. 7-2
7.1.2 Bridge Deck. 7-3
7.1.3 Expansion Joints 7-3
7.1.4 Traffic Railing. 7-3
7.2 Classifications and Definitions 7-3
7.2.1 Major Widening 7-3
7.2.2 Minor Widening 7-4
7.3 Analysis and Design 7-4
7.3.1 Aesthetics 7-4
7.3.2 Materials 7-4
7.3.3 Load Distribution 7-4
7.3.4 Design Specifications 7-4
7.3.5 Overlays 7-5
7.3.6 Substructure (Rev. 01/12) 7-5
7.3.7 Other Special Considerations (Rev. 01/12) 7-5
7.4 Attachment to Existing Structure. 7-5
7.4.1 Drilling 7-5

7.4.2 Dowel Embedments . . . 7-6
7.4.3 Surface Preparation. . . . 7-6
7.4.4 Connection Details . . . 7-6
Figure 7.4.4-1 Flat Slab Widening . . . 7-7
Figure 7.4.4-2 Monolithic Beam and Slab Widening . . . 7-8
Figure 7.4.4-3 AASHTO Beam Superstructure Widening . . . 7-8
Figure 7.4.4-4 Dowel Installation . . . 7-9
7.5 Construction Sequence. . . . 7-9
7.6 Widening Rules (Rev. 01/12) . . . 7-9
7.7 Deck Grooving . . . 7-11
7.8 Repair or Strengthening using Carbon Fiber Reinforced Polymers . . . 7-11
7.8.1 System Selection. . . . 7-11
7.8.2 Design . . . 7-12
7.8.3 Construction . . . 7-14
8 Movable Bridges . . . 8-1
8.1 General . . . 8-1
8.1.1 Applicability . . . 8-1
8.1.2 Redundancy . . . 8-2
8.1.3 Trunnion Support Systems for New Bridges . . . 8-3
8.1.4 Vertical Clearance Requirements . . . 8-3
8.1.5 Horizontal Clearance Requirements . . . 8-3
8.1.6 Bridge Operator Parking . . . 8-4
8.1.7 Definitions and Terms . . . 8-4
8.1.8 Movable Bridge Terminology. . . . 8-4
Figure 8.1.8-1: Movable Bridge Terminology. . . . 8-5
8.2 Construction Specifications and Design Calculations . . . 8-6
8.3 Double Leaf Bascule Bridges . . . 8-6
8.4 Speed Control for Leaf-driving Motors [LRFD-MHBD 5.4] . . . 8-6
Figure 8.4-1: Speed Ramp . . . 8-7
8.4.1 Mechanical Drive Systems [LRFD-MHBD 5.4] . . . 8-7
8.4.2 Hydraulic Drive Systems [LRFD-MHBD 7] . . . 8-8
8.5 Machinery Systems. . . . 8-8
8.5.1 Trunnions and Trunnion Bearings [LRFD-MHBD 6.8.1.3]. . . . 8-8
Figure 8.5.1-1: Trunnion Hubs. . . . 8-9
8.5.2 Racks and Girders [LRFD-MHBD 6.8.1.2]. . . . 8-10
8.5.3 Leaf Balance [LRFD-MHBD 1.5] . . . 8-10
8.5.4 Main Drive Gearboxes [LRFD-MHBD 6.7.6] . . . 8-11
8.5.5 Open Gearing [LRFD-MHBD 6.7.5]. . . . 8-12
8.5.6 Span Locks [LRFD-MHBD 6.8.1.5.1]. . . . 8-12
Figure 8.5.6-1: Lock Design Criteria . . . 8-13
8.5.7 Brakes [LRFD-MHBD 5.6 and 6.7.13] . . . 8-14
8.5.8 Couplings [LRFD-MHBD 6.7.9.3] . . . 8-14
8.5.9 Clutches. . . . 8-14
8.5.10 Bearings (Sleeve and Anti-Friction) [LRFD-MHBD 6.7.7] . . . 8-14
8.5.11 Anchors [LRFD-MHBD 6.4.1.4] . . . 8-15
8.5.12 Fasteners [LRFD-MHBD 6.7.15] . . . 8-17

8.6 Hydraulic Systems for Rehabilitations [LRFD-MHBD 7] 8-17
8.6.1 Hydraulic Pumps [LRFD-MHBD 7.5.5] 8-18
8.6.2 Cylinders 8-18
8.6.3 Control Components [LRFD-MHBD 7.5.6] 8-19
8.6.4 Hydraulic Lines [LRFD-MHBD 7.9.1]. 8-19
8.6.5 Miscellaneous Hydraulic Components 8-19
8.7 Electrical [LRFD-MHBD 8] 8-20
8.7.1 Electrical Service [LRFD-MHBD 8.3]. 8-20
8.7.2 Alternating Current Motors [LRFD-MHBD 8.5] 8-20
8.7.3 Engine Generators [LRFD-MHBD 8.3.9] 8-21
8.7.4 Automatic Transfer Switch [LRFD-MHBD 8.3.8] 8-22
8.7.5 Electrical Control [LRFD-MHBD 8.4] 8-22
8.7.6 Motor Controls [LRFD-MHBD 8.6]. 8-23
8.7.7 Programmable Logic Controllers [LRFD-MHBD 8.4.2.3]. 8-23
8.7.8 Limit and Seating Switches [LRFD-MHBD 8.4.4] 8-23
8.7.9 Safety Interlocking [LRFD-MHBD 8.4.1] 8-24
8.7.10 Instruments [LRFD-MHBD 8.4.5]. 8-25
8.7.11 Control Console [LRFD-MHBD 8.4.6] 8-25
8.7.12 Conductors [LRFD-MHBD 8.9] 8-25
8.7.13 Electrical Connections between Fixed and Moving Parts [LRFD-MHBD 8.9.5]. 8-26
8.7.14 Electrical Connections across the Navigable Channel [LRFD-MHBD 8.9.7]. 8-26
8.7.15 Conduits [LRFD-MHBD 8.10] 8-26
8.7.16 Service Lights [LRFD-MHBD 8.11] 8-27
8.7.17 Navigation Lights [LRFD-MHBD 1.4.4.6.2] (Rev. 01/12) 8-27
8.7.18 Grounding and Lightning Protection [LRFD-MHBD and 8.13]. 8-27
8.7.19 Movable Bridge Traffic Signals and Safety Gates [LRFD-MHBD 1.4.4] . 8-28
8.7.20 Communications Systems 8-28
8.7.21 Functional Checkout 8-28
8.7.22 Functional Checkout Tests 8-29
8.8 Control House 8-32
8.8.1 General 8-32
8.8.2 Site Water Lines 8-33
8.8.3 Site Sanitary Sewage System 8-33
8.8.4 Stairs, Steps and Ladders 8-33
8.8.5 Handrails, Guards, Railing and Grating. 8-34
8.8.6 Framing and Sheathing 8-34
8.8.7 Desktop and Cabinet. 8-34
8.8.8 Insulation 8-35
8.8.9 Fire-Stopping. 8-35
8.8.10 Roof. 8-35
8.8.11 Doors and Hardware 8-36
8.8.12 Windows 8-36
8.8.13 Veneer Plaster (Interior Walls) 8-37
8.8.14 Gypsum Board (Interior Walls) 8-37

8.8.15 Floor Tile 8-37
8.8.16 Epoxy Flooring. 8-37
8.8.17 Painting 8-37
8.8.18 Wall Louvers 8-37
8.8.19 Toilet and Bath Accessories 8-38
8.8.20 Equipment and Appliances 8-38
8.8.21 Furnishings 8-38
8.8.22 Pipe and Fittings 8-38
8.8.23 Plumbing Fixtures 8-38
8.8.24 Heating, Ventilating and Air Conditioning 8-39
8.8.25 Interior Luminaires. 8-39
8.8.26 Video Equipment 8-39
8.8.27 Fire and Security Alarm System 8-39
8.9 Maintainability 8-40
8.9.1 General 8-40
8.9.2 Trunnion Bearings 8-40
8.9.3 Leaf-Jacking of New Bridges. 8-40
8.9.4 Trunnion Alignment Features 8-41
8.9.5 Lock Systems 8-41
8.9.6 Machinery Drive Systems 8-41
8.9.7 Lubrication Provisions 8-42
8.9.8 Drive System Bushings 8-42
8.9.9 Local Switching 8-42
8.9.10 Service Accessibility 8-42
8.9.11 Service Lighting and Receptacles 8-42
8.9.12 Communications 8-43
8.9.13 Diagnostic Reference Guide for Maintenance. 8-43
8.9.14 Navigation Lights. 8-43
8.9.15 Working Conditions for Improved Maintainability 8-43
8.9.16 Weatherproofing 8-43
9 BDR Cost Estimating (Rev. 01/12) **9-1**
9.1 General 9-1
9.2 BDR Bridge Cost Estimating 9-1
9.2.1 Substructure 9-2
9.2.2 Superstructure. 9-3
9.2.3 Design Aid for Determination of Reinforcing Steel 9-6
9.3 Historical Bridge Costs 9-8
9.3.1 Deck/Girder Bridges 9-8
9.3.2 Post - tensioned Concrete Box Girder, Segmental Bridges 9-10
9.3.3 Post-tensioned Cast-in-place Concrete Box Girder Bridge (low level overpass) 9-11
9.3.4 Bascule Bridge Cost 9-11
9.4 Bridge Debris Quantity Estimation 9-12
10 Pedestrian Bridges **10-1**
10.1 General 10-1
10.2 Referenced Standards 10-1

10.3 Designer Qualifications (Rev. 01/12) 10-1
10.4 Design (Rev. 01/12) 10-1
10.5 Loading 10-3
10.6 Materials (Rev. 01/12) 10-3
10.7 Steel Connections (Rev. 01/12) 10-4
10.8 Charpy V-Notch Testing 10-5
10.9 Cable-Stayed Pedestrian Bridges 10-5
10.10 Painting/Galvanizing 10-5
10.11 Erection 10-6
10.12 Railings/Enclosures 10-6
10.13 Drainage 10-6
10.14 Corrosion Resistant Details 10-6
10.15 Fabricator Requirements 10-7
10.16 Lighting / Attachments 10-7
10.17 Maintenance and Inspection Attachments 10-7
10.18 Permit Structures (Rev. 01/12) 10-7
Volume 1 - Revision History R1-1

INTRODUCTION

I.1 GENERAL

A. The ***FDOT Structures Design Guidelines***, (***SDG***) is Volume 1 of the ***Structures Manual***. See the ***Structures Manual Introduction*** for additional information including authority, scope, distribution and process for modifications to the ***Manual***.

B. The ***SDG*** incorporates technical design criteria and includes additions, deletions, or modifications to the requirements of the ***AASHTO LRFD Bridge Design Specifications (LRFD)***.

C. This volume of the ***Structures Manual*** provides engineering standards, criteria, and guidelines for developing and designing bridges and retaining walls for which the Structures Design Office (SDO) and District Structures Design Offices (DSDO) have overall responsibility.

D. Information on miscellaneous roadway appurtenances as well as general administrative, geometric, shop drawing, and plans processing may be found in the ***Plans Preparation Manual***, ***(PPM) Topic Nos. 625-000-007 and 625-000-008)***.

I.2 FORMAT

A. The ***SDG*** chapters are organized more by "component," "element," or "process" than by "material" as is the ***LRFD***. As a result, the chapter numbers and content of the ***SDG*** do not necessarily align themselves in the same order or with the same number as ***LRFD***. ***LRFD*** references are provided to quickly coordinate and associate ***SDG*** criteria with that of ***LRFD***. The ***LRFD*** references may occur within article descriptions, the body of the text, or in the commentary and are shown within brackets; i.e., [1.3], [8.2.1]. See Table I.3-1 for a cross reference of the ***SDG*** to ***LRFD*** and Table I.3-2 for a cross reference of the ***SDG*** to ***AASHTO LRFD-Movable Highway Bridge Design Specifications.*** These cross references are provided only as an aid to the Designer and are not necessarily a complete listing of ***SDG*** and ***LRFD*** requirements.

B. The ***SDG*** is written in the active voice to Structural Designers, Professional Engineers, Engineers of Record, Structural Engineers, and Geotechnical Engineers engaged in work for the Florida Department of Transportation.

Table I.3-1 Cross Reference between AASHTO LRFD & SDG

SECTION NO.		DESCRIPTION
LRFD	SDG	
1.3.4	2.10	Redundancy Factors
1.3.5	2.10	Operational Importance Factors
2.5.2.2	4.6.1	Access and Maintenance
2.5.2.6	1.2	Deflection and Span-to-Depth Ratios
2.6	3.3	Foundation Scour Design
2.6.6	6.6	Deck Drainage
3.4.1	2.1.1	Load Factors and Load Combinations
Table 3.4.1-1	Table 2.4.1-1	Load Factors
3.4.1-2	4.6.4	Design Requirements for Cantilever Bridges with Fixed Pier Tables
3.5.1	2.2	Dead Loads
3.6	2.1.2	Live Loads
3.6.1.1.2	4.6.8	Transverse Deck Loading, Analysis & Design (Mult. Presence Factors)
3.6.1.2.2	4.6.8	Transverse Deck Loading, Analysis & Design (Axle Loads HL 93 truck)
3.6.1.2.3	4.6.8	Transverse Deck Loading, Analysis & Design (Axle Loads design tandem)
3.6.1.2.5	4.6.8	Transverse Deck Loading, Analysis & Design (Tire Contact Area)
3.6.1.3.2	1.2	Deflection and Span-to-Depth Ratios
3.6.5	2.6	Vehicular Collision Force
3.8.1	2.4.1	Wind Loads on Bridges
3.10.9.2	2.3.2	Seismic Provisions
3.12.2	2.7.1	Uniform Temperature
3.12.2	6.3	Temperature Movement
3.12.3	2.7.2	Temperature Gradient
3.14	2.11	Vessel Collision
3.14.1	2.11.8	Scour with Vessel Collision
3.14.3	2.11.4	Design Methodology - Damage Permitted
3.14.4	2.11.3	Design Vessel
3.14.5.3	2.11.3	Design Vessel LOA
3.14.14	2.11.9	Application of Impact Forces
3.14.14.2	2.11.10	Impact Forces on Superstructure
4.6.2.2	2.8	Barrier/Railing Distribution for Beam-Slab Bridges
4.6.2.2	2.9	Live Load Distribution for Beam-Slab Bridges
4.7.4	2.3.1	Seismic Provisions
5.4.2.4	1.4.1	Concrete Modulus of Elasticity
5.4.2.6	1.4.1	Concrete Modulus of Rupture
5.4.3	4.1.2	Reinforcing Steel
5.4.5	4.5.2	Prestress (Strand Couplers prohibited)
5.7.3.4	5.6.5	Transverse Concrete Deck Analysis
5.8.3	4.1.4	Shear Design

Table I.3-1 Cross Reference between AASHTO LRFD & SDG

SECTION NO.		DESCRIPTION
LRFD	SDG	
5.8.5	4.5.11	Principal Tensile Stresses (General)
5.9.4.2.2	4.5.11	Principal Tensile Stress Limits (Service)
5.9.5.3	4.3.1.D.5	Pretensioned Beams (When calculating Service Limit State)
5.9.5.4	4.3.1.D.5	Pretensioned Beams (When calculating Service Limit State)
5.10.3	3.6.10	Minimum Reinforcement Spacing
5.10.8	4.2.8	Crack Control in Continuous Superstructures
5.10.8	4.2.11	Temperature and Shrinkage Reinforcement
5.12.3	1.4.2	Concrete Cover
5.13.1	4.2	Deck Slabs
5.13.4.4	3.5.1	Prestressed Concrete Piles
5.13.4.5.2	3.6.10	Minimum Reinforcement Spacing
5.14.1.2.2	4.3.3	Florida Bulb-Tee Beams
5.14.2	4.5	Post-Tensioning, General
5.14.2.3.3	4.5.11	Principal Tensile Stress Limits (Construction)
5.14.2.3.4.B	2.12.D	Substructure Load Combination
5.14.2.3.6	4.6.5	Creep and Shrinkage strains - Relative Humidity of 75%
5.14.4.3	4.4	Precast, Prestressed Slab Units
6.4.1	5.3	Structural Steel
6.4.3.1	5.4	Bolts
6.7.2	5.2	Dead Load Camber
6.7.3	5.5	Minimum Steel Dimensions
6.7.4	5.6.3	Cross Frames
6.7.4	5.7	Diaphragms and Cross Frames for "I-Girders"
6.7.5	5.6.4	Lateral Bracing
6.10.1.7	4.2.7	Minimum Negative Flexure Slab Reinforcement
6.10.1.7	4.2.9	Concrete Decks on Continuous Steel Girders
6.10.11.1	5.8	Transverse Intermediate Stiffeners
6.10.11.2	5.9	Bearing Stiffeners
6.10.11.3	5.10	Longitudinal Stiffeners
6.13	5.11	Connections and Splices
6.13.2.8	5.11.1	Slip Resistance
6.13.3	5.11.2	Welded Connections
6.13.6.2	5.11.3	Welded Splices
9.7.1.3	4.2.10	Skewed Decks
9.7.2	4.2.4	Deck Slab Design
9.7.2.4	4.2.4.A.	Empirical Design Method for Category 1 Structures not staged.
9.7.2.5	4.2.4	Deck Slab Design
9.7.3	4.2.4	Deck Slab Design
10.5.5	3.5.6	Resistance Factors

Table I.3-1 Cross Reference between AASHTO LRFD & SDG

SECTION NO.		DESCRIPTION
LRFD	SDG	
10.5.5	3.6.3	Resistance Factors
10.5.5 & 6	3.8	Spread Footings
10.7.1.2	3.5.4	Minimum Pile Spacing and Clearances
10.7.1.4	3.5.7	Battered Piles
10.7.1.6.2	3.5.5	Downdrag
10.7.3.3	3.5.9	Anticipated Pile Lengths
10.7.3.8	3.5.11	Load Tests
10.7.3.8.6	3.5.12	Pile Driving Resistance
10.7.3.12	3.4	Lateral Load
10.7.6	3.5.8	Minimum Tip Elevation (Piles)
10.7.9	3.5.10	Test Piles
10.8.1.5	3.6.4	Minimum Tip Elevation (Drilled Shafts)
10.8.3.5.6	3.5.11	Load Tests
10.8.3.8	3.4	Lateral Load
10.8.3.9.3	3.6.10	Minimum Reinforcement Spacing
11.10	3.13.2	Mechanically Stabilized Earth Walls
11.10.1	3.13.2.D	Bin Walls
11.10.2.1	3.13.2.E	Minimum Length of Soil Reinforcement
11.10.2.2	3.13.2.F	Minimum Front Face Wall Embedment
11.10.2.3	3.13.2.G	Facing
11.10.5	3.13.2.H	External Stability
11.10.6.3.2	3.13.2.I	Apparent Coefficient of Friction
11.10.6.4	3.13.2.J	Soil Reinforcement Strength
11.10.6.4.4	3.13.2.K	Reinforcement/Facing Connection
11.5.1	3.13.2.B	Minimum Service Life
13.7	6.7	Traffic Railing
13.7.2	6.7.6	Requirements for Test Levels 5 and 6
13.11	6.2	Curbs and Medians
14.4	6.4.2	Movement
14.5.1	6.4.1	Expansion Joint Design Provisions
14.5.3.2	6.4.2	Movement
14.6.2-1	6.5.1	Bearings - Design

Table I.3-2 Cross Reference between AASHTO LRFD-MHBD& SDG

SECTION NO.		DESCRIPTION
LRFD-MHBD	SDG	
1.4.4	8.7.19	Movable Bridge Traffic Signals and Safety Gates
1.4.4.6.2	8.7.17	Navigation Lights
1.5	8.5.3	Span Balance
2.4.2.2	8.3	Special Strength Load Combination
5.4	8.4.1	Requirements for Mechanical Drive Systems
5.4.2	8.4	Speed Control for Leaf-driving Motors
5.6	8.5.7	Brakes
6.4.1.4	8.5.11	Anchors
6.7.5	8.5.5	Open Gearing
6.7.6	8.5.4	Speed Reducers
6.7.7	8.5.10	Bearings (Sleeve and Anti-Friction)
6.7.8	8.5.1	Trunnions and Trunnion Bearings
6.7.9.3	8.5.8	Couplings
6.7.13	8.5.7	Brakes
6.7.15	8.5.12	Fasteners
6.8.1.2	8.5.2	Racks and Girders
6.8.1.3	8.5.1	Trunnions and Trunnion Bearings
6.8.1.5.1	8.5.6	Span Locks
7	8.4.1	Requirements for Hydraulic Drive Systems
7	8.6	Hydraulic Systems
7.5.5	8.6.1	Hydraulic Pumps
7.5.6	8.6.3	Control Components
7.9.1	8.6.4	Hydraulic Lines
8	8.7	Electrical
8.1	8.7.1	Electrical Service
8.3.8	8.7.4	Automatic Transfer Switch
8.3.9	8.7.3	Engine Generators
8.4	8.7.5	Electrical Control
8.4.1	8.7.9	Safety Interlocking
8.4.2.3	8.7.7	Programmable Logic Controllers
8.4.4	8.7.8	Limit and Seating Switches
8.4.5	8.7.10	Instruments
8.4.6	8.7.11	Control Console
8.5	8.7.2	Alternating Current Motors
8.6	8.7.6	Motor Controls
8.9	8.7.12	Conductors
8.9.5	8.7.13	Electrical Connections between Fixed and Moving Parts
8.9.7	8.7.14	Electrical Connections across the Navigable Channel
8.11	8.7.16	Service Lights
8.12	8.7.18	Grounding and Lightning Protection
8.13	8.7.18	Grounding and Lightning Protection

1 GENERAL REQUIREMENTS

1.1 GENERAL

This Chapter clarifies, supplements, and contains deviations from the information in ***LRFD*** Sections [2], [5], and [6]. These combined requirements establish material selection criteria for durability to meet the 75-year design life requirement established by the Department.

1.1.1 Design Review

See the ***PPM***, Volume 1, Chapter 26 for definitions of Category 1 and Category 2 bridges and design review responsibilities.

1.1.2 Substructure and Superstructure Definitions

See the substructure and superstructure definitions in the FDOT ***Standard Specifications for Road and Bridge Construction***, Section 1-3 Definitions, and note the following:

A. Box culverts and bulkheads are substructures. Retaining walls, including MSE walls, have their own environmental classification procedure.

B. Approach slabs are superstructure; however, Class II Concrete (Bridge Deck) will be used for all environmental classifications.

1.1.3 Clearances (Rev. 01/12)

A. Vertical Clearances

1. The vertical clearance of bridges over water is the minimum distance between the underside of the superstructure and the normal high water (NHW) for navigable water crossings or the mean high water (MHW) for coastal crossings. See ***PPM***, Volume 1, Section 2.10 for vertical clearance requirements over water. When applicable, vertical clearance is measured at the inside face of the fender system.

2. The vertical clearance for grade separations over roads or railroads is the minimum distance between the underside of the superstructure and road or railroad. See ***PPM***, Volume 1, Section 2.10.

3. See ***SDG*** 8.1.4 for Movable Bridge clearance requirements.

B. See ***SDG*** 8.1.5 for Movable Bridge horizontal clearance requirements.

1.1.4 Bridge Height Classifications

FDOT classifications of bridges over water are based on the following vertical clearances:

A. Low Level - less than 20 feet.

B. Medium Level - 20 feet or greater but less than 45 feet.

C. High Level - 45 feet or greater.

1.1.5 Buy America Provisions

The Code of Federal Regulations, 23 CFR 635.410 requires that steel or iron products (including coatings) used on Federal Aid Projects must be manufactured in the United States. "Buy America" provisions are covered in ***FDOT Specification 6-5.*** and ***PPM Volume 1,*** Chapter 13.

1.1.6 ADA on Bridges

Sidewalks on bridges and approaches must comply with the Americans with Disabilities Act (ADA) and Florida Accessibility Code. Generally the maximum longitudinal slope of bridges along any grade or vertical curve should be limited to 5% and sidewalk cross-slopes must be not exceed 2%. Portions of bridges with grades in excessive of 5% require the use of continuous handrails and landing areas. See ***Structures Detailing Manual*** (***SDM***) Chapter 18 for details of expansion joint treatment and sidewalk grades steeper than 5%. See ***ADA Standards for Transportation Facilities***, Section 405 (Ramps) and Section 505 (Handrails).

1.1.7 Design Life

If the structure design life exceeds the ***LRFD*** 75 year requirement, coordinate with the State Materials Office to develop the required materials specifications and the SDO for other related design and detailing requirements.

1.2 DEFLECTION AND SPAN-TO-DEPTH RATIOS [2.5.2.6]

A. Satisfy either the Span-to-Depth Ratios in ***LRFD*** [2.5.2.6.3] or the criteria for deflection in ***LRFD*** [2.5.2.6.2] and [3.6.1.3.2].

B. For the design of bridges with pedestrian traffic or bridges where vehicular traffic is expected to queue, the criteria for deflection in ***LRFD*** [2.5.2.6.2] and [3.6.1.3.2] are mandatory.

C. For Steel Girder bridges, where the girders are designed as composite in the positive moment regions only, both the above referenced Span-to-Depth Ratios and LL deflection criteria shall be satisfied.

1.3 ENVIRONMENTAL CLASSIFICATIONS

1.3.1 General

A. The District Materials Engineer or the Department's Environmental/Geotechnical Consultant will determine the environmental classifications for all new bridge sites. Environmental classification is required for major widenings (see definitions in ***SDG*** Chapter 7) and may be required for minor widenings. This determination will be made before or during the development of the Bridge Development Report (BDR)/30% Plans Stage (See the ***PPM*** Volume 1 Chapter 26) and the results will be included in the documents. The bridge site will be tested, and separate classifications will be determined for both superstructure and substructure.

B. In the bridge plans "General Notes," include the environmental classification for both the superstructure and substructure according to the following classifications:

   1. Slightly Aggressive
   2. Moderately Aggressive
   3. Extremely Aggressive

C. For the substructure, additional descriptive data supplements the environmental classification. After the classification, note in parentheses the source and magnitude of the environmental classification parameters resulting in the classification.

Commentary: As an example, for a proposed bridge located in a freshwater swampy area where the substructure is determined to be in an Extremely Aggressive environment due to low soil pH of 4.5 and the superstructure to be in a Slightly Aggressive environment, the format on the bridge plans will be:

ENVIRONMENTAL CLASSIFICATION:

Substructure: Extremely Aggressive (Soil - pH = 4.5)

Superstructure: Slightly Aggressive

D. The substructure will not be classified less severely than the superstructure.

1.3.2 Classification Criteria

A. Bridge substructure and superstructure environments will be classified as Slightly Aggressive, Moderately Aggressive, or Extremely Aggressive environments according to the following criteria and as shown in Figure 1.3.3-1. The superstructure is defined as all components from the bearings upward. Conversely, every element below the bearings is classified as substructure.

B. Marine Structures: Structures located over or within 2500 feet of a body of water containing chloride above 2000 ppm are considered to be marine structures and all other structures will be considered non-marine structures. Only chloride test results are required to determine if a structure is classified as marine. Results of chloride tests for most locations are available on the internet at the following address: http://databases.sm.dot.state.fl.us/bridgeenvironment.htm

NOTE: Access to this database is currently limited to FDOT personnel only. Consultants needing information from this database should contact the appropriate district office for assistance.

Classify superstructure and substructure as follows:

1. For structures over or within 2,500 feet of a body of water with chloride concentrations in excess of 6000 ppm, both superstructure and substructure will be classified as extremely aggressive.
2. For structures over any water with chloride concentrations of 2000 to 6000 ppm, the substructure will be classified as extremely aggressive. Superstructures located at 12 feet or less above the mean high water elevation will be classified as extremely

aggressive. Superstructures located at an elevation greater than 12 feet above the mean high water elevation will be classified as moderately aggressive.

3. For structures within 2,500 feet of any of a body of water with a chloride concentration of 2000 to 6000 ppm, but not directly over the body of water, the superstructure will be classified as moderately aggressive. The substructure will follow the non-marine criteria in Table 1.3.2-1.

C. Non-Marine Structures: All structures that do not meet the criteria above are considered non-marine structures.

1. Substructure: Classify all non-marine substructures in contact with water and/or soil as follows:

Table 1.3.2-1 Criteria for Substructure Environmental Classifications

Classification	Environmental Condition	Units	Steel		Concrete	
			Water	Soil	Water	Soil
Extremely Aggressive (If any of these conditions exist)	pH		< 6.0		< 5.0	
	Cl	ppm	> 2000		> 2000	
	SO_4	ppm	N.A.		> 1500	> 2000
	Resistivity	Ohm-cm	< 1000		< 500	
Slightly Aggressive (If all of these conditions exist)	pH		> 7.0		> 6.0	
	Cl	ppm	< 500		< 500	
	SO_4	ppm	N.A.		< 150	< 1000
	Resistivity	Ohm-cm	> 5000		> 3000	
Moderately Aggressive	This classification must be used at all sites not meeting requirements for either slightly aggressive or extremely aggressive environments.					
pH = acidity ($-\log_{10}H^+$; potential of Hydrogen), Cl = chloride content, SO_4 = Sulfate content.						

2. Superstructure: Any superstructure located within 2,500 feet of any coal burning industrial facility, pulpwood plant, fertilizer plant, or any other similar industry classify as Moderately Aggressive. All others classify as Slightly Aggressive.

D. For MSE wall environmental requirements, see Figure 3.12-2. MSE wall environmental requirements are partially based on air contaminants. See ***Design Standard*** Index 6020 for concrete class and cover requirements based on resulting FDOT Wall Type.

1.3.3 Chloride Content

A. To optimize the materials selection process, the Designer and/or District Materials Engineer have the option of obtaining representative cores to determine chloride intrusion rates for any superstructure within 2,500 feet of any major body of water containing more than 6,000-ppm chlorides. The District Materials Engineer will take core samples from bridge superstructures in the immediate area of the proposed

superstructure. The sampling plan with sufficient samples representing the various deck elevations will be coordinated with the State Corrosion Engineer. The Corrosion Laboratory of the State Materials Office will test core samples for chloride content and intrusion rates.

Commentary: Generally, all superstructures that are within line-of-sight and within 2,500 feet of the Atlantic Ocean or the Gulf of Mexico are subject to increased chloride intrusion rates on the order of 0.016 lbs/cy/year at a 2-inch concrete depth. The intrusion rate decreases rapidly with distance from open waters and/or when obstacles such as rising terrain, foliage or buildings alter wind patterns.

B. After representative samples are taken and tested, Table 1.3.3-1 will be used to correlate the core results (the chloride intrusion rate in lbs/cy/year at a depth of 2-inch) with the classification.

Table 1.3.3-1 Chloride Intrusion Rate/Environmental Classification

Chloride Intrusion Rate	Classification
≥ **0.016** lbs/cy/year	Extremely Aggressive
< **0.016** lbs/cy/year	Moderately Aggressive

See Figure 1.3.3-1 Flow Chart for determining Environmental Classification.

Figure 1.3.3-1 Flow Chart for Environmental Classification of Structures

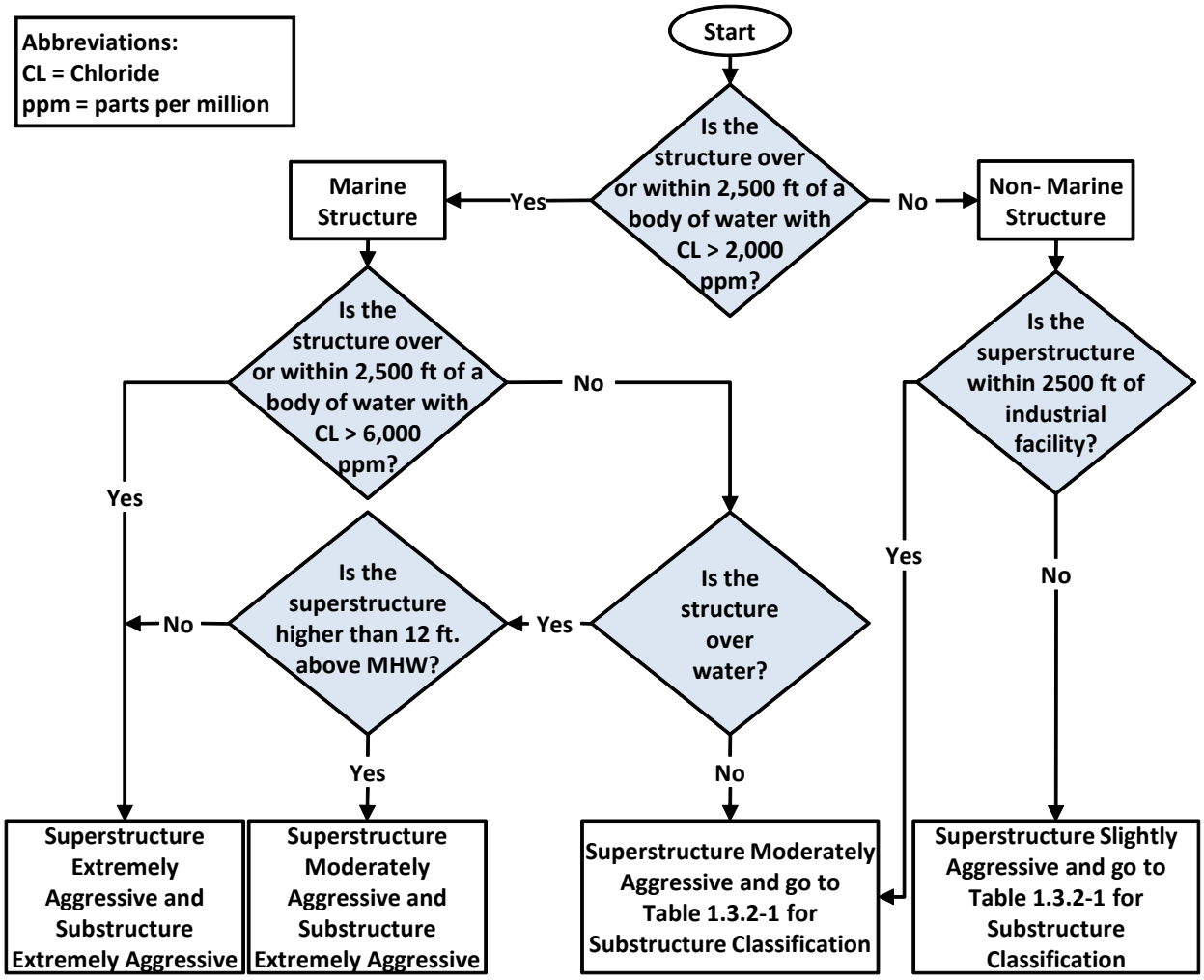

Figure 1.3.3-1 Flow Chart for Environmental Classification of Structures January 2010

1.4 CONCRETE AND ENVIRONMENT [5.12.1]

1.4.1 General (Rev. 01/12)

A. Assume the use of Florida limerock coarse aggregate in design, with $\mathbf{K_1}$= 0.9 as the correction factor when calculating the Modulus of Elasticity in ***LRFD*** [5.4.2.4]. For Florida limerock, $\mathbf{w_c}$ is typically taken as 0.145 kcf.

B. Use ASTM A615, Grade 60 reinforcing steel for concrete design.

C. Do not specify epoxy coated reinforcing steel.

D. The use of lightweight concrete for structural applications requires prior SDO approval.

1.4.2 Concrete Cover (Rev. 01/12)

Delete ***LRFD*** [5.12.3] and substitute the following requirements:

A. The requirements for concrete cover over reinforcing steel are listed in Table 1.4.2-1. Examples of concrete cover are shown in Figures 1.4.2-1 through 1.4.2-6.

Figure 1.4.2-1 End Bent (All Environments)

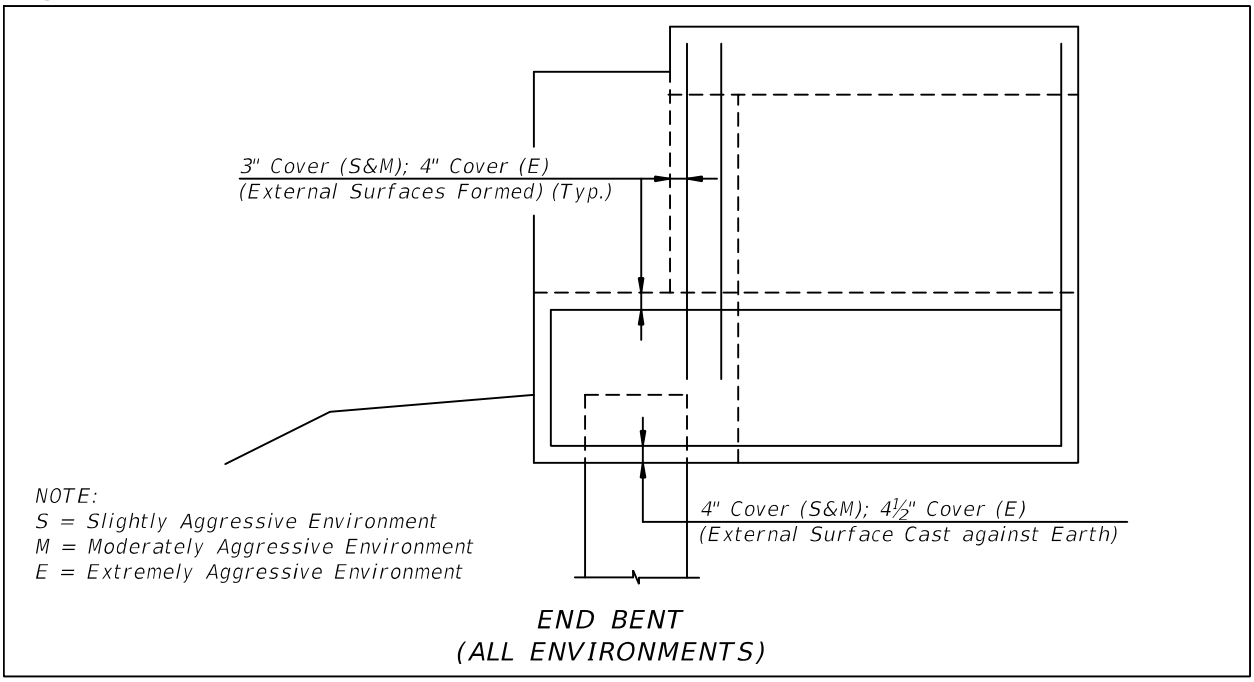

Figure 1.4.2-2 Piers (All Environments) (1 of 3)

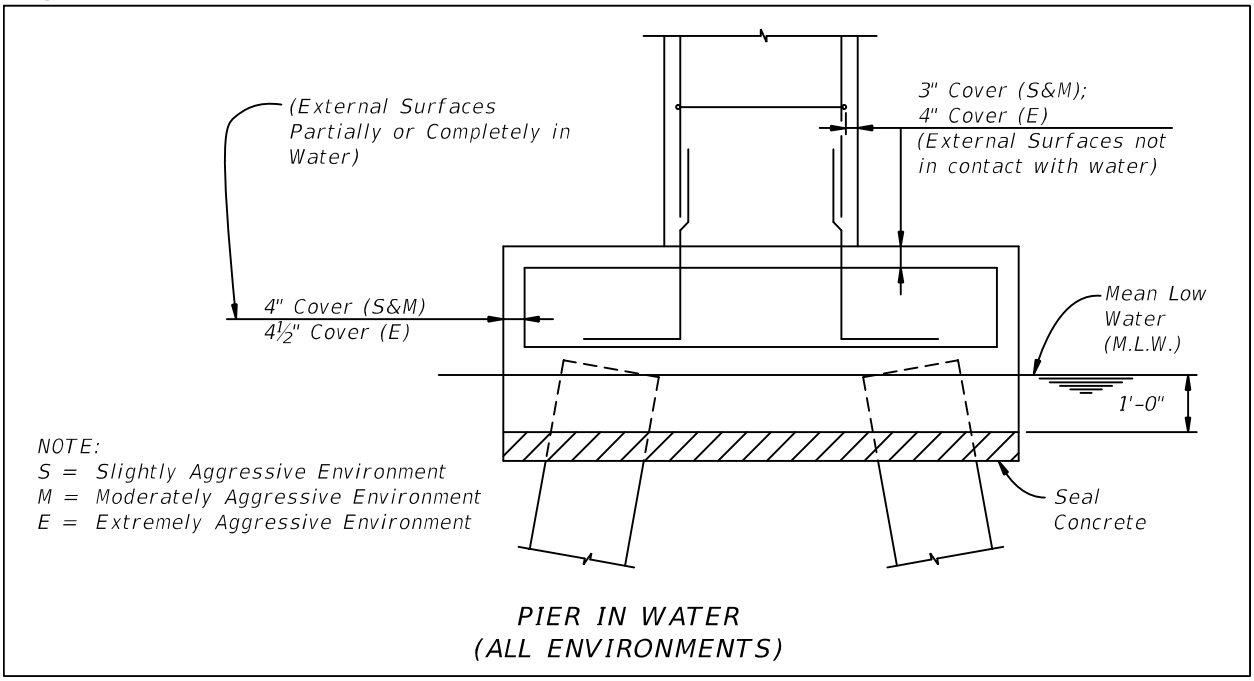

Figure 1.4.2-3 Piers (All Environments) (2 of 3)

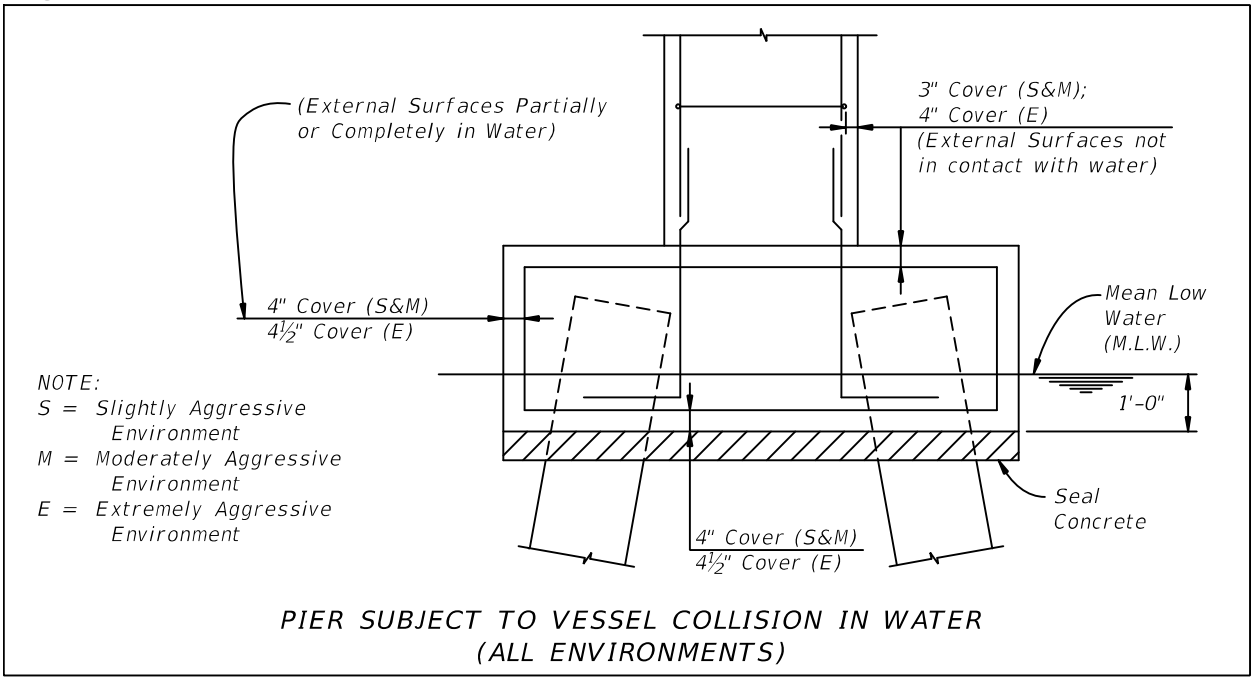

Figure 1.4.2-4 Piers (All Environments) (3 of 3)

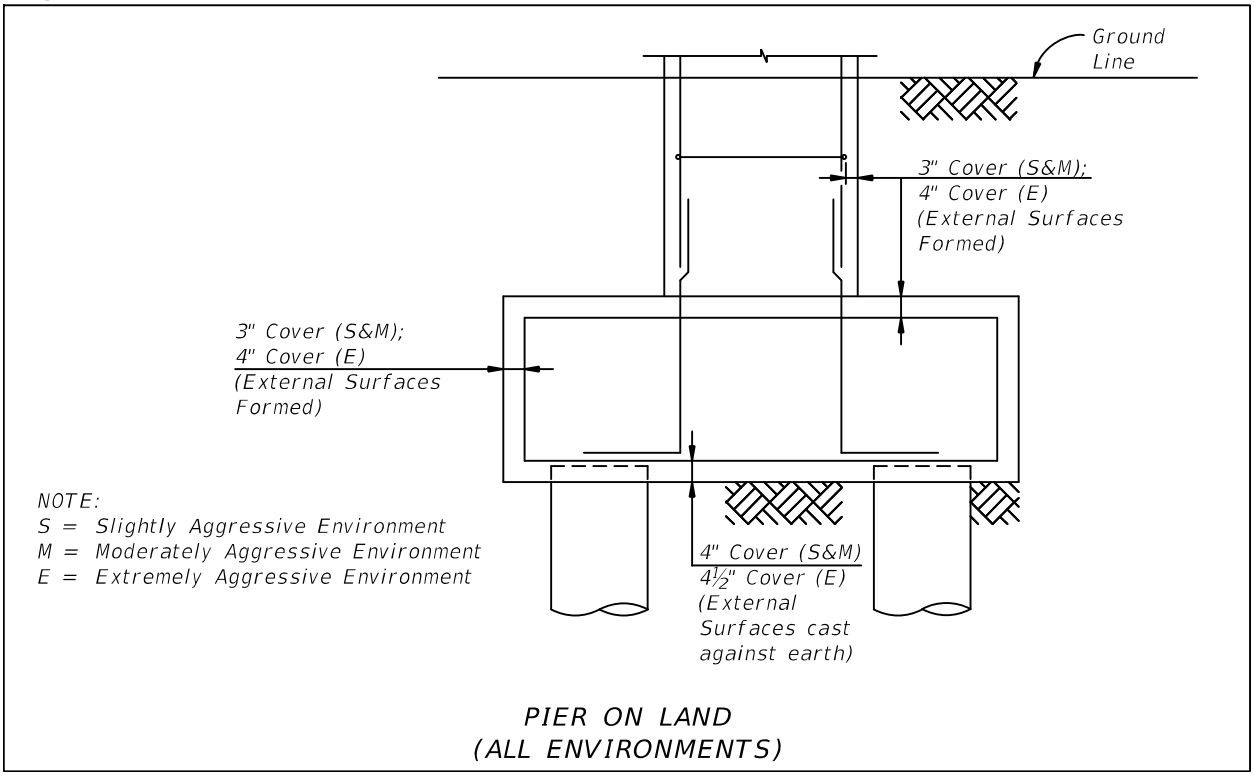

Figure 1.4.2-5 Pier Cap and Intermediate Bent (All Environments)

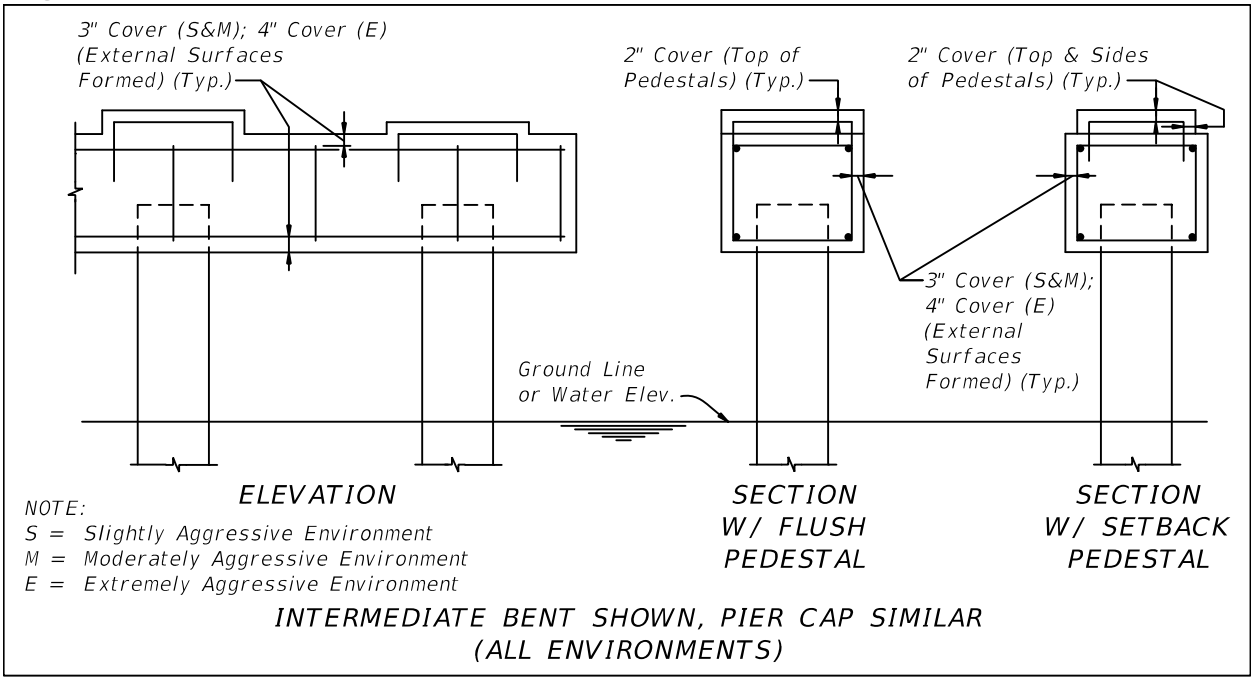

Figure 1.4.2-6 Cast -in-Place slab beam supported superstructure (All environments)

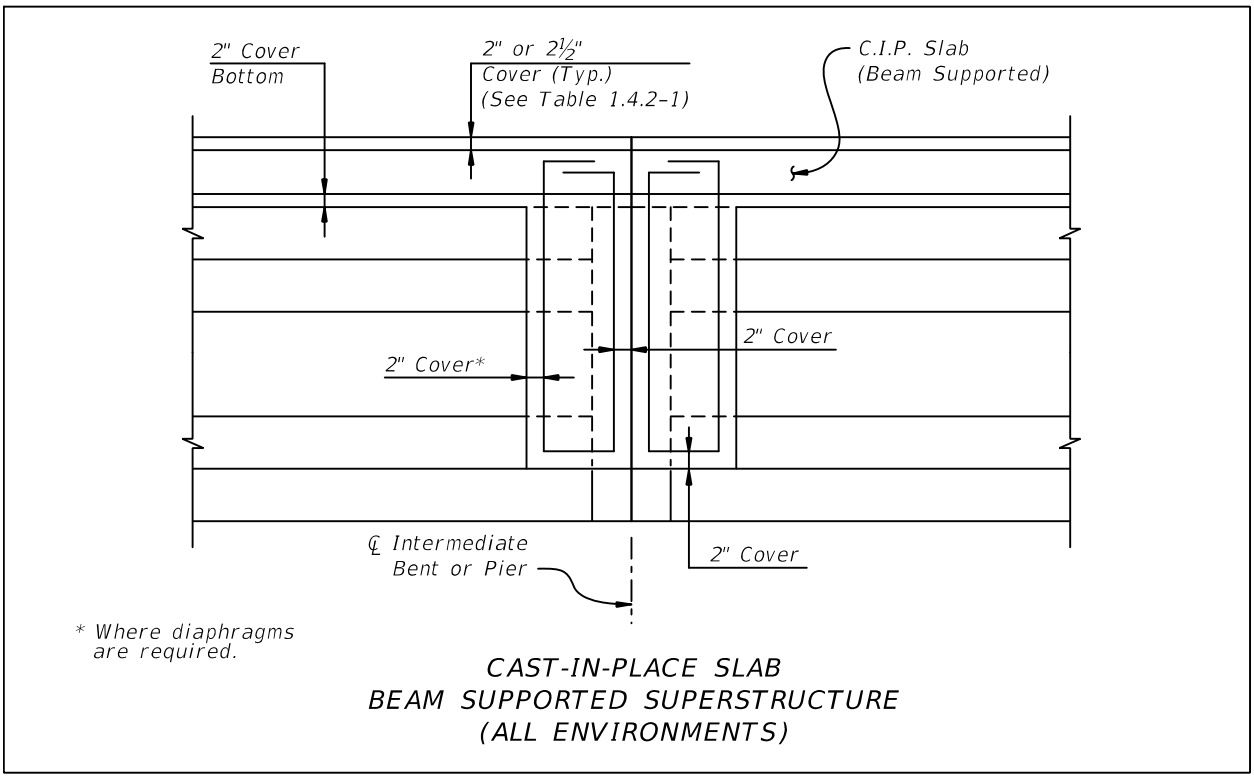

B. When deformed reinforcing bars are in contact with other embedded items such as post-tensioning ducts, the actual bar diameter, including deformations, must be taken into account in determining the design dimensions of concrete members and in applying the design covers of Table 1.4.2-1.

Table 1.4.2-1 Concrete Cover

	Concrete Cover (inches)	
	S or M[1]	**E[1]**
Superstructure (Precast)		
Internal and external surfaces (except riding surfaces) of segmental concrete boxes, and external surfaces of prestressed beams (except the top surface)	2	
Top surface of girder top flange	1	
Top deck surfaces: Short Bridges[2]	2	
Top deck surfaces: Long Bridge[2]	2½ [3]	
All components and surfaces not included above (including barriers)	2	
Superstructure (Cast-in-Place)		
All external and internal surfaces (ex. top surfaces)	2	
Top deck surfaces; Short Bridges[2]	2	
Top deck surfaces; Long Bridges[2]	2½ [3]	
Substructure (Precast and Cast-in-Place)		
External surfaces cast against earth and surfaces in contact with water	4	4½
Exterior. formed surfaces, columns, and tops of footings not in contact with water	3	4
Internal surfaces	3	
Girder Pedestals	2	
Substructure (Precast)	3	4
Prestressed Piling	3	
Spun Cast Cylinder Piling[4]	2	
Drilled Shaft and auger cast piles	6	
Retaining Walls (Cast-in-Place or Precast) (Excluding MSE walls[5])	2	3
Culverts (Cast-in-Place or Precast)	2	3
Bulkheads	4	

1. S = Slightly Aggressive; M = Moderately aggressive; E = Extremely Aggressive
2. See Short & Long Bridge Definitions and exempted bridge types in Chapter 4.
3. Cover dimension includes a 0.5-inch allowance for planing; see ***SDG*** 4.2.2.
4. Concrete for spun cast cylinder piling to be used in an extremely aggressive environment must have a documented chloride ion penetration apparent diffusion coefficient with a mean value of 0.005 in^2/year or less, otherwise 3-inch concrete cover is required. See ***SDG*** 3.5.17 for further limits on the use for splicing of these piles.
5. See ***SDG*** 3.13 for MSE wall cover requirements.

1.4.3 Class and Admixtures

A. The "General Notes" for both bridge plans and wall plans require the clear identification of, and delineation of use for, concrete class and admixtures used for strength and durability considerations.

B. Concrete Class Requirements: When the environmental classifications for a proposed structure have been determined, those portions of the structure located in each classification will be built with the class of concrete described in Table 1.4.3-1 for the intended use and location unless otherwise directed or approved by the Department.

Table 1.4.3-1 Structural Concrete Class Requirements

Concrete Location and Usage		Environmental Classification		
		Slightly Aggressive	**Moderately Aggressive**	**Extremely Aggressive**
Superstructure	Cast-in-Place (other than Bridge Decks)	Class II	Class IV	
	Cast-in-Place Bridge Deck (Including Diaphragms)	Class II (Bridge Deck)	Class IV	
	Approach Slabs	Class II (Bridge Deck)		
	Precast or Prestressed	Class III, IV, V or VI	Class IV, V or VI	
Substructure	Cast-in-Place (other than Bridge Seals)	Class II	Class IV	Class IV or V
	Precast or Prestressed (other than piling)	Class III, IV, V or VI	Class IV, V, or VI	
	Cast-in-Place Columns located directly in splash zone	Class II	Class IV	
	Piling	Class V (Spec.) or VI		
	Drilled Shafts	Class IV (Drilled Shafts)		
	Retaining Walls	Class II or III	Class IV	
See Specification 346-3 for minimum 28-day compressive strengths. Corrosion Protection Measures: Calcium nitrite, silica fume, metakaolin or ultrafine fly ash admixtures may be required. Admixture use must conform to the requirements of "Concrete Class and Admixtures for Corrosion Protection."				

See Figure 1.4.2-1 End Bent in Slightly or Moderately Aggressive Environment
See Figure 1.4.2-2 Pier in Water (All Environments 1 of 3)
See Figure 1.4.2-3 Pier Subject to Vessel Collision in Water (All Environments 2 of 3)
See Figure 1.4.2-4 Pier on Land (All Environments 3 of 3)
See Figure 1.4.2-5 Intermediate Bent in water (Slightly or Moderately Aggressive Environment)
See Figure 1.4.2-6 Cast-in-Place Slab with Beam Supported Superstructure (All Environments)

C. Unless otherwise specifically designated or required by the FDOT, the concrete strength utilized in the design must be consistent with the 28-day compressive strength given in ***Specification*** Section 346.

Commentary: Example:

Component - submerged piling

Environment - Extremely Aggressive over saltwater

Concrete Class - Class V (Special) with silica fume, metakaolin or ultrafine fly ash

Quality Control and Design Strength at 28 days - 6,000 psi

D. Admixtures for Corrosion Protection: Primary components of structures located in Moderately or Extremely Aggressive environments utilize Class IV, V, V (Special), or VI Concrete. These concrete classes use fly ash, slag, silica fume, metakaolin, ultrafine fly ash and/or cement type to reduce permeability.

E. Structures located in Extremely Aggressive marine environments may require additional measures as defined below. These additional measures and their locations must be clearly identified in the "General Notes". Technical Special Provisions may be required for their implementation.

F. The use of concrete admixtures to enhance durability must be consistent with these guidelines. The Engineer of Record may request additional measures to be approved by the State Corrosion Engineer and the State Structures Design Engineer.

G. When the environmental classification is Extremely Aggressive due to the presence of chloride in the water of a marine environment:

1. For all superstructure components located within the splash zone, contact the State Materials Office for guidance on cover and design mix requirements.
2. Specify silica fume, metakaolin or ultrafine fly ash in all:
   a. Piles of pile bents. For pile bents with post-tensioned cylinder piles, specify silica fume, metakaolin or ultrafine fly ash for pile sections to be located within the splash zone plus one section above and below the splash zone limits.
   b. Retaining walls, including MSE walls located within the splash zone and within 50 feet of the shoreline.
   c. Substructure elements, excluding footings, located within the splash zone.
3. Do not specify silica fume, metakaolin or ultrafine fly ash for drilled shafts.

The splash zone is the vertical distance from 4 feet below MLW to 12 feet above MHW.

1.4.4 MASS CONCRETE (Rev. 01/12)

A. Consider Mass Concrete requirements in selecting member sizes and avoid Mass Concrete if practical; however, when its use is unavoidable, indicate which portions are Mass Concrete.

B. Mass Concrete is defined as: "Any large volume of cast-in-place or precast concrete with dimensions large enough to require that measures be taken to cope with the generation of heat and attendant volume change so as to minimize cracking."

C. Criteria for Denoting Mass Concrete in Plans.

1. All Bridge components Except Drilled Shafts: When the minimum dimension of the concrete exceeds 3 feet and the ratio of volume of concrete to the surface area is greater than 1 foot, provide for mass concrete. (The surface area for this ratio includes the summation of all the surface areas of the concrete component being considered, including the full underside (bottom) surface of footings, caps, construction joints, etc.) Note volume and surface area calculations in units of feet.

2. Drilled Shafts: All drilled shafts with diameters greater than 6 feet shall be designated as mass concrete and a ***Technical Special Provision (TSP)*** shall be required.

*Commentary: Generally, a **TSP** is not required for piers constructed on land. The temperature control plan as described in the Specifications for mass concrete is sufficient.*

D. Take precautionary measures to reduce concrete cracking in large volumes of concrete. To prevent or control cracking in Mass Concrete, analyze the placement of construction joints and reinforcing steel. Refer to other methods as outlined in ACI 207, ACI 224, and ACI 308.

For estimated bridge pay item quantities, include separate pay item numbers for Mass Concrete (Substructure) and Mass Concrete (Superstructure). Do not consider seal Concrete as Mass Concrete.

1.5 EXISTING HAZARDOUS MATERIAL (Rev. 01/12)

A. Survey the project to determine if an existing structure contains hazardous materials such as lead-based paint, asbestos-graphite bearing pads, other asbestos-containing materials, etc. Information will be provided by the Department or by site testing to make this determination. Coordinate with the District Asbestos Coordinator for issues relating to asbestos-containing materials.

Commentary: Previous FDOT Standards and Specifications called for the use of lead based paint beneath bearing plates on both steel and concrete bridges and on steel members prior to erection and adjacent concrete placement. This paint has not been removed during subsequent repainting or maintenance operations because it is encapsulated in concrete or is located between faying surfaces. If lead based paint exists anywhere on the existing structure, indicate on the plans that the structure contains lead based paint for the purpose of triggering the containment requirements in the Specifications.

B. When an existing structure has been identified as having hazardous material, develop adequate abatement plans and provisions for worker safety, handling, storage, shipping, and disposal of the hazardous material. If proposed work will disturb identified hazardous materials, include in the project documents, protection, handling, and disposal requirements.

C. When a project involves hazardous materials, the FDOT design project manager will provide assistance in preparing the construction documents and the technical special provisions for handling and disposal of hazardous materials. Use the National Institute of Building Sciences (NIBS) ***Model Guide Specifications for Asbestos Abatement and Management in Buildings*** when developing asbestos abatement plans.

D. Comply with the ***General Industry, Construction and Worker Safety*** regulations of the Occupational Safety and Health Administration (OSHA) and the Environmental Protection Agency (EPA) for the handling and disposal of hazardous materials.

1.6 POST-INSTALLED ANCHOR SYSTEMS (Rev. 01/12)

1.6.1 General

A. Post-Installed Anchor Systems are used to attach new construction to existing concrete structures. Post-Installed Anchor Systems shall be limited to Adhesive Bonded Anchor Systems with adhesive bonding material listed on the Department's ***Qualified Products List*** (***QPL***) and Undercut Anchor Systems as approved on a project-by project basis by the District Structures Design Engineer and the State Structures Design Engineer. Design criteria and specific usage limitations for these anchor systems are provided in the following sections.

B. Specify either an Adhesive Bonded Anchor System or an Undercut Anchor System based on the specific usage limitations contained herein, product availability, installation and testing requirements, construction sequence and potential associated traffic control requirements, and all associated costs.

Commentary: Consider the adhesive bonding material cure time required between installation and field testing of adhesive bonded anchors when developing construction sequence and/or traffic control plans.

C. For pre-approved adhesive bonding material systems, refer to the ***QPL***. Comply with Section 937 of the ***Specifications***. Require that Adhesive Bonded Anchors be installed in accordance with manufacturer's recommendations for hole diameter and hole cleaning technique and meet the requirements of Section 416 of the ***Specifications***.

D. When using Undercut Anchors, the designer must submit a request to the District Specifications Office to use Developmental Specifications Dev416 and Dev937 for Post-Installed Anchor Systems which includes provisions for both Adhesive Bonded Anchors and Undercut Anchors.

1.6.2 Adhesive-Bonded Anchors and Dowels Systems

A. Adhesive Bonded Anchor Systems consist of adhesive bonding material and steel bar anchors installed in clean, dry holes drilled in hardened concrete. Anchors may be deformed reinforcing bars or threaded rods depending upon the application. Except where specifically permitted by the Structures Manual or Design Standards,

do not use Adhesive Bonded Anchor Systems to splice with existing reinforcing bars in either non-prestressed or prestressed concrete applications unless special testing is performed and special, proven construction techniques are utilized.

*Commentary: Installation of Adhesive Anchor Systems in saturated, surface-dry holes; i.e., holes with damp surfaces but with no standing water, is not pre-approved or recommended by the Department. However, in the event such a condition is encountered during construction, the Department may consider approving continued installation, but only on an adjusted, case-by-case basis. The damp hole strength of products on the **QPL** has been determined to be approximately 75% of the required dry hole strength.*

B. Adhesive Bonded Anchor Systems meeting the **Specifications** and design constraints of this article are permitted only for horizontal, vertical downward, or downwardly inclined installations. Overhead or upwardly inclined installations of Adhesive Bonded Anchors are prohibited. Do not use Adhesive Bonded Anchor Systems for installations with a combination of predominately sustained tension loads and/or lack of structural redundancy. Predominantly sustained tension loads are defined as load combinations where the permanent component of the factored tension load exceeds 30% of the factored tensile resistance for Type HV adhesives. Examples of structures that will not utilize Adhesive Bonded Anchor Systems include foundation anchorages for mast arm and cantilever sign/signal structures. For prestressed pile splices, refer to Section 455 of the **Specifications** for adhesive bonded dowel requirements.

C. Unless special circumstances dictate otherwise, design Adhesive Bonded Anchor Systems for a ductile failure. A ductile failure requires embedment sufficient to ensure that failure will occur by yielding of the steel. In order to produce ductile failure, the following embedments may be assumed:

1. For Anchors in Tension: The embedment length necessary to achieve 125% of the specified yield strength or 100% of the specified tensile strength, whichever is less.
2. For Anchors in Shear: An embedment equal to 70% of the embedment length determined for anchors in tension.

D. In circumstances where ductile failure is not required, the design may be based upon the design strength of either the steel anchor or the adhesive bonding material, whichever is less.

Commentary: Characteristics to consider when determining when a ductile failure is not required, include:

1. *The amount of over-strength resistance provided beyond the factored design loads by the anchorage system;*
2. *Potential ductile failure of multiple members within the load path preempting failure of the anchorage system;*
3. *The number of anchors provided that may result in alternative system level redundancy;*

4. *The inherent value of a ductile failure mode to provide advance warning of an impending failure by excessive deflection or redistribution of loads;*
5. *The dominate failure mode, tension, shear or creep.*
6. *32" F-shape traffic railing retrofits, utilizing reinforcing configurations substantially similar to Index 420, need only meet the design strength of the steel anchor (18.6 kips), except that the tension reinforcing within three feet of an open joint should meet 125% of the yield strength (23.25 kips). This recommendation is based on test results from FHWA/TTI Report No. 05/9-8132-3 (March, 2005).*

E. Use Type HV for the design of Adhesive Bonded Anchors for structural applications. Only use Type HSHV adhesive bond strengths for the design of traffic railing anchorages where anchors will be installed in the vertical downward position and not subjected to sustained loading.

Commentary: Type HSHV adhesives are only intended for use in traffic railing applications where the predominant loading is from very short term loading under vehicular impact. The creep test and horizontal installation requirements for accepting Type HSHV and Type HV adhesives are the same, therefore lower bound bond strength (Type HV) shall be used for designs with sustained loading or horizontal installations.

F. Notation

The following notation is used in this Article:

$\mathbf{A_e}$ = effective tensile stress area of steel anchor (shall be taken as 75% of the gross area for threaded anchors). [in^2]

$\mathbf{A_{n0}}$ = $\langle \mathbf{16d} \rangle^2$, effective area of a single Adhesive Anchor in tension; used in calculating ψ_{gn} (See Figure 1.6.2-1). [in^2]

$\mathbf{A_n}$ = effective area of a group of Adhesive Anchors in tension; used in calculating ψ_{gn}, defined as the rectangular area bounded by a perimeter spaced **8d** from the center of the anchors and limited by free edges of concrete (See Figure 1.6.2-1). [in^2]

$\mathbf{A_{v0}}$ = $\mathbf{4.5} \langle \mathbf{c}^2 \rangle$, effective breakout area of a single Adhesive Anchor in shear; used in calculating ψ_{gv} (See Figure 1.6.2-2). [in^2]

$\mathbf{A_v}$ = effective area of a group of Adhesive Anchors in shear and/or loaded in shear where the member thickness, **h**, is less than **1.5c** and/or anchor spacing, **s**, is less than **3c**; used in calculating ψ_{gv}, (See Figure 1.6.2-2). [in^2]

$\mathbf{c}$ = anchor edge distance from free edge to centerline of the anchor [in]. (must also meet Table 1.4.2-1 Cover Requirements.)

d = nominal diameter of Adhesive Anchor. [in]

f'c = minimum specified concrete strength. [ksi]

f_y = minimum specified yield strength of Adhesive Anchor steel. [ksi]

f_u = minimum specified ultimate strength of Adhesive Anchor steel. [ksi]

h = concrete member thickness. [in]

h_e = embedment depth of anchor. [in]

N_c = tensile design strength as controlled by bond for Adhesive Anchors. [kips]

N_n = nominal tensile strength of Adhesive Anchor. [kips]

N_o = nominal tensile strength as controlled by concrete embedment for a single Adhesive Anchor. [kips]

N_s = design strength as controlled by Adhesive Anchor steel. [kips]

N_u = factored tension load. [kips]

s = Adhesive Anchor spacing (measured from centerlines of anchors). [in]

When using Type HSHV adhesives, the minimum anchor spacing is **12d**.

Commentary: The use of higher bond strengths with close anchor spacing can potentially result in concrete breakout failure under tensile loading that may not be accounted for in the current equations. A check of the concrete breakout strength for groups of anchors in accordance with ACI 318 Appendix D, would provide a conservative concrete capacity under tensile loading and justification of closer anchor spacing for HSHV adhesives.

V_c = shear design strength as controlled by the concrete embedment for Adhesive Anchors. [kips]

V_s = design shear strength as controlled by Adhesive Anchor steel. [kips]

V_u = factored shear load. [kips]

T' = 1.08 ksi nominal bond strength for general use products on the ***QPL*** (Type V and Type HV). 1.83 ksi nominal bond strength for Type HSHV adhesive products on the ***QPL*** for traffic railing barrier retrofits only.

ϕ_c = 0.85, capacity reduction factor for adhesive anchor controlled by the concrete embedment, (ϕ_c =1.00 for extreme event load case)

ϕ_s = 0.90, capacity reduction factor for adhesive anchor controlled by anchor steel.

ψ_e = modification factor, for strength in tension, to account for anchor edge distance less than **8d** (1.0 when $\mathbf{c} \geq \mathbf{8d}$).

ψ_{gn} = strength reduction factor for Adhesive Anchor groups in tension (1.0 when $\mathbf{s} \geq \mathbf{16d}$).

ψ_{gv} = strength reduction factor for Adhesive Anchor groups in shear and single Adhesive Anchors in shear influenced by member thickness (1.0 when $\mathbf{s} \geq \mathbf{3.0c}$ and $\mathbf{h} \geq \mathbf{1.5c}$).

G. Design Requirements for Tensile Loading

Use Equation 1-2 to determine the design tensile strength for Adhesive Anchor steel:

$$\phi N_s = \phi_s A_e f_y \qquad \text{[Eq. 1-2]}$$

Use Equation 1-3 to determine the design tensile strength for Adhesive Anchor bond:

$$\phi N_c = \phi_c \psi_e \psi_{gn} N_o \qquad \text{[Eq. 1-3]}$$

where:

$$N_o = T' \pi d h_e \qquad \text{[Eq. 1-4]}$$

For anchors with a distance to a free edge of concrete less than **8d**, but greater than or equal to **3d**, a reduction factor, ψ_e, as given by Equation 1-5 must be used. For anchors located less than **3d** from a free edge of concrete, an appropriate strength reduction factor must be determined by special testing. For anchors with an edge distance greater than **8d**, ψ_e shall be taken as 1.0. Edge distance for all anchors must also meet Table 1.4.2-1 Cover Requirements.

$$\psi_e = 0.70 + 0.30(c/8d) \qquad \text{[Eq. 1-5]}$$

For anchors loaded in tension and spaced closer than **16d**, a reduction factor, ψ_{gn}, given by Equation 1-6 must be used. For anchor spacing greater than **16d**, ψ_{gn} must be taken as 1.0.

$$\psi_{gn} = (A_n / A_{no}) \qquad \text{[Eq. 1-6]}$$

H. Design Requirements for Shear Loading

1. Adhesive Anchors loaded in shear must be embedded not less than 6d with an edge distance not less than the greater of 3d or that distance required to meet the concrete cover requirements of Table 1.4.2-1.
2. For Adhesive Anchors loaded in shear, the design shear strength controlled by anchor steel is determined by Equation 1-7:

$$\phi V_s = \phi_s \, 0.7 \, A_e f_y \qquad \text{[Eq. 1-7]}$$

3. For Adhesive Anchors loaded in shear, the design shear strength controlled by concrete breakout for shear directed toward a free edge of concrete is determined by Equation 1-8:

$$\phi V_c = \phi_c \Psi_{gv} \, 0.4534 \, c^{1.5} \sqrt{f'c} \qquad \text{[Eq. 1-8]}$$

4. For anchors spaced closer than **3.0c** and/or member thickness less than **1.5c**, a reduction factor, Ψ_{gv}, given by Equation 1-9 must be used. For anchor spacing greater than **3.0c** with member thickness greater than **1.5c**, Ψ_{gv} must be taken as 1.0.

$$\Psi_{gv} = A_v / A_{vo} \qquad \text{[Eq. 1-9]}$$

I. Interaction of Tensile and Shear Loadings

1. The following linear interaction between tension and shear loadings given by Equation 1-10 must be used unless special testing is performed:

$$(N_u / \phi N_n) + (V_u / \phi V_n) \leq 1.0 \qquad \text{[Eq. 1-10]}$$

2. In Equation 1-10, ϕN_n is the smaller of the design tensile strength controlled by the Adhesive Anchor steel (Equation 1-2) or the design tensile strength as controlled by Adhesive Anchor bond (Equation 1-3). ϕV_n is the smaller of the design shear strength controlled by the Adhesive Anchor steel (Equation 1-7) or the design shear strength as controlled by concrete breakout (Equation 1-8).

Commentary: If Adhesive Anchor Systems are required to act as dowels from existing concrete components such that the existing reinforcing steel remains fully effective over its length, then the Adhesive Anchor System must be installed to a depth equal to the development length of the existing reinforcing steel. In this case, the required reinforcing steel spacing, covers, etc. apply to both the existing reinforcing steel and the Adhesive Anchor System. There is, however, no additional benefit to the Adhesive Anchor System to install anchors to a greater depth than required by this Article.

See Figure 1.6.2-1 Effective Tensile Stress Areas of Adhesive Anchors.

See Figure 1.6.2-2 Effective Shear Stress Areas of Adhesive Anchors.

Click to download a Mathcad program Adhesive Anchor v1.01.

Click to view Adhesive Bonded Anchor Design Examples.

Figure 1.6.2-1 Effective Tensile Stress Areas of Adhesive Anchors

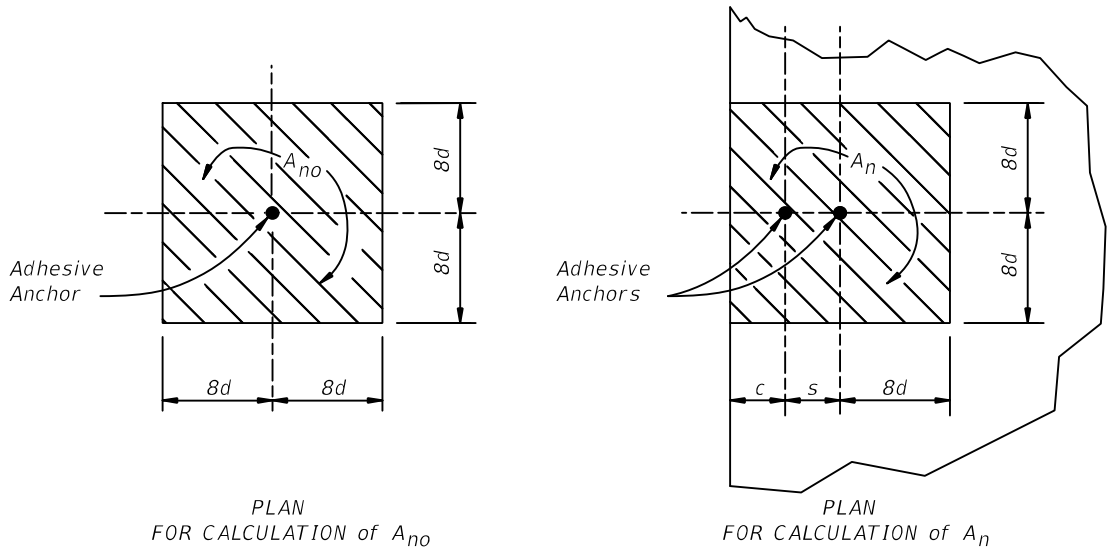

EFFECTIVE TENSILE STRESS AREAS
OF ADHESIVE ANCHORS

Figure 1.6.2-2 Effective Shear Stress Areas of Adhesive Anchors

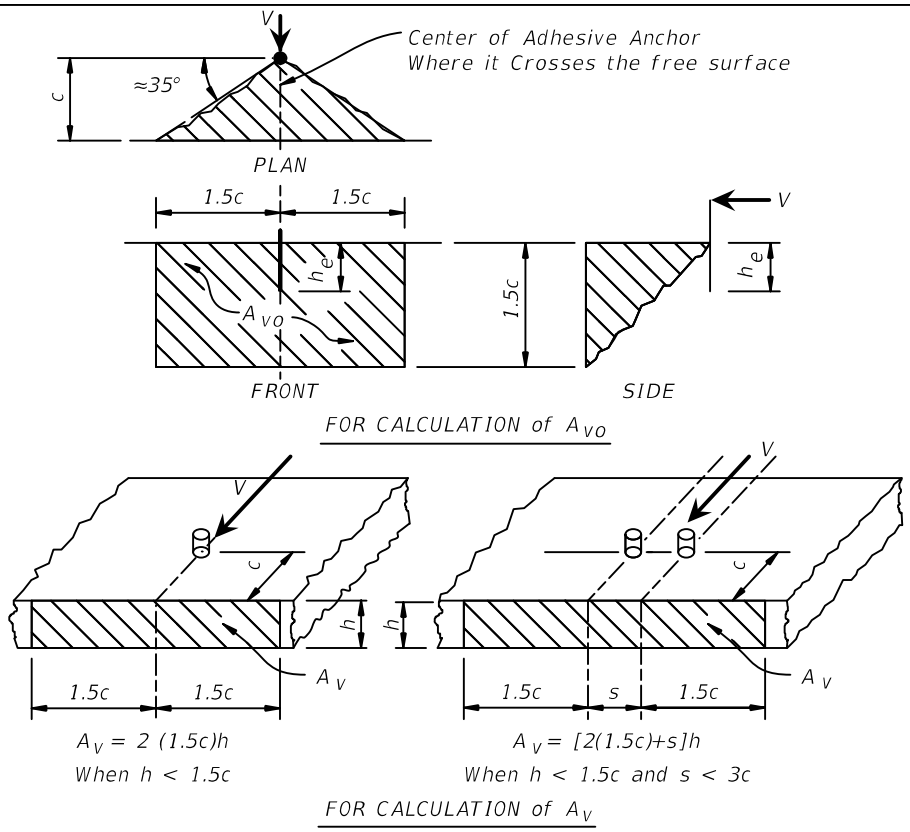

EFFECTIVE SHEAR STRESS AREAS
OF ADHESIVE ANCHORS

1.6.3 Undercut Anchor Systems

A. Undercut Anchors are primarily intended for overhead applications and applications with predominately sustained tension loads where Adhesive Bonded Anchors are precluded. They may be used for other applications in lieu of Adhesive Bonded Anchors where appropriate and applicable.

B. EOR's Design Criteria

1. Use the following criteria for providing factored design load(s), bolt diameter, embedment depth and anchor configuration in the plans for each Undercut Anchor location.
2. Contact the State Structures Design Engineer for additional design guidance.
3. Design Undercut Anchors in accordance with ACI 318, Appendix D, Current Edition, using the product data provided by the ACI 355.2 product evaluation report.

Commentary: A Mathcad based Undercut Anchor Design Program following ACI 318 Appendix D is available from the State Structures Design Engineer by request.

4. Do not account for supplementary reinforcement at potential concrete failure surfaces in any structural member receiving an Undercut Anchor (Condition B per ACI 318, Appendix D).
5. Use only Category 1 Undercut Anchor Systems as defined in ACI 318, Appendix D.
6. Use only undercut anchor systems qualified for use in cracked concrete. Use the effectiveness factor for cracked concrete (k_c or k_{cr}) as taken from the ACI 355.2 product evaluation report.

1.7 LOAD RATING

A. When load rating structures, perform a ***LRFR*** load rating analysis as defined in the ***AASHTO Manual for Bridge Evaluation (MBE)***, Section 6, Part A and as modified by the Department's Bridge Load Rating Manual. See ***SDG*** Figure 7.1.1-1 for widenings and rehabilitations.

B. Include the load rating calculations with the 90% submittals and attach the completed Bridge Load Rating Summary Detail Sheet and the Load Rating Summary Form.

1.8 POST-DESIGN SERVICES

A. The ***Construction Project Administration Manual (CPAM)*** contains instructions needed to complete the administrative portion of Department of Transportation construction contracts. It is designed to give details to Department representatives for administering items mandated in Florida Statutes, rules and/or contract specifications and for the successful completion of construction contracts. The ***CPAM*** ensures consistency in carrying out Department of Transportation policies and helps ensure that all construction contracts are successfully administered on a fair and equal basis.

B. When responding to "Request for Information" (RFI), "Request for Modification" (RFM), and "Request For Corrections" (RFC), refer to ***CPAM*** 8.11 and ***CPAM*** 10.10 for Engineer of Record's responsibilities and required department involvement. Project related questions that arise during construction that are not covered by specific Department policies or Contract Documents, contact appropriate department personnel for input and concurrence.

Commentary: The reason for getting Department input is to avoid setting unwanted precedence, to ensure uniformity between projects and Districts and to provide a mechanism for policy feedback.

1.9 MISCELLANEOUS ATTACHMENTS TO BRIDGES (Rev. 01/12)

A. Miscellaneous attachments include but are not limited to signs, lights, traffic signals, conduits, drain pipes, utilities and other similar non-standardized items.

B. Design and detail miscellaneous attachments to bridges using the allowable connection types shown in Appendix 1A and show the details in the plans. See also ***SDG*** 1.6 for specific requirements related to post-installed anchor systems.

C. Coordinate locations and attachment details with other disciplines in accordance with ***PPM*** Volume 1, Chapter 7. Coordinate utilities accommodation with the District Utilities Engineer.

2 LOADS AND LOAD FACTORS

2.1 GENERAL

This Chapter contains information related to loads, loadings, load factors, and load combinations. It also contains deviations from ***LRFD*** regarding Loads and Load Factors as well as characteristics of a structure that affect each.

2.1.1 Load Factors and Load Combinations [3.4.1]

A. In ***LRFD*** Table 3.4.1-1, under Load Combination: LL, IM, etc., Limit State: Extreme Event I, use $\gamma_{eq} = \mathbf{0.0}$

B. See ***SDG*** 2.7.2 for additional temperature gradient requirements.

2.1.2 Live Loads [3.6]

A. Investigate possible future changes in the physical or functional clear roadway width of the bridge. (***LRFD*** [3.6.1.1])

Commentary: Frequently bridges are widened and areas dedicated to pedestrian traffic become travel lanes for vehicular traffic. In the future, the sidewalk could also be simply eliminated in order to provide additional space to add a traffic lane.

B. In addition to the vehicular loads contained in ***LRFD***, satisfy the load rating requirements of ***SDG*** 1.7.

Commentary: Load Rating may control the design in some cases. TDB C06-01 Deleted Section Jan. 2006 2.1.2 Design Permit Vehicles. The information is now covered in the Department's Bridge Load Rating Manual.

2.2 DEAD LOADS

A. Future Wearing Surface: See Table 2.2-1 regarding the allowance for a Future Wearing Surface.

B. Sacrificial Concrete: Bridge decks subject to the profilograph requirements of ***SDG*** Chapter 4 require an added thickness of sacrificial concrete, which must be accounted for as added Dead Load but cannot be utilized for bridge deck section properties.

C. Stay-in-Place Forms: Design all beam and girder superstructures (except segmental box girder superstructures) to include the weight of stay-in-place metal forms, where permitted. For clear spans between beams or girders greater than 14 feet, verify the availability of non-cellular forms and include any additional dead load allowance greater than 20 psf or specify the use of cellular forms (where permitted) or non-cellular forms with cover sheets.

D. See Table 2.2-1 Miscellaneous Dead Loads for common component dead loads.

Table 2.2-1 Miscellaneous Dead Loads

ITEM	UNIT	LOAD
General		
Concrete, Counterweight (Plain)	Lb/cf	145
Concrete, Structural	Lb/cf	150
Future Wearing Surface	Lb/sf	15[1]
Soil; Compacted	Lb/cf	115
Stay-in-Place Metal Forms	Lb/sf	20[2]
Traffic Railings		
32” F-Shape (Index 420)	Lb/ft	420
Median, 32” F-Shape (Index 421)	Lb/ft	485
42” Vertical Shape (Index 422)	Lb/ft	590
32” Vertical Shape (Index 423)	Lb/ft	385
42” F-Shape (Index 425)	Lb/ft	625
Corral Shape (Index 424)	Lb/ft	460
Thrie-Beam Retrofit (Index 471, 475 & 476)	Lb/ft	40
Thrie-Beam Retrofit (Index 472, 473 & 474)	Lb/ft	30
Vertical Face Retrofit with 8” curb height (Index 480 – 483)	Lb/ft	270
Traffic Railing /Sound Barrier (8'-0") (Index 5210)	Lb/ft	1010
Pedestrian/Bicycle Railings & Fences		
Pedestrian /Bicycle Railing (27" Concrete Parapet only) (Index 820)	Lb/ft	225
Aluminum Pedestrian/Bicycle Bullet Railing (1, 2 or 3 rails) (Index 820, 821 & 822)	Lb/ft	10
Bridge Fencing (Vertical) (Index 810)	Lb/ft	25
Bridge Fencing (Curved Top) (Index 811)	Lb/ft	40
Bridge Fencing (Enclosed) with 5 ft. clear width (Index 812)	Lb/ft	85
Bridge Picket Railing (Steel) (Index 851)	Lb/ft	30
Bridge Picket Rail (Aluminum) (Index 861)	Lb/ft	15

Table 2.2-1 Miscellaneous Dead Loads

ITEM	UNIT	LOAD
Prestressed Beams[3]		
AASHTO Type II (Index 20120)	Lb/ft	385
AASHTO Type III (Index 20130)	Lb/ft	585
AASHTO Type IV (Index 20140)	Lb/ft	825
AASHTO Type V (Index 20150)	Lb/ft	1055
AASHTO Type VI (Index 20160)	Lb/ft	1130
Florida Bulb-T 72 (Index 20172)	Lb/ft	940
Florida Bulb-T 78 (Index 20178)	Lb/ft	1150
Florida-U 48 Beam (Index 20248)	Lb/ft	1260[4]
Florida-U 54 Beam (Index 20254)	Lb/ft	1330[4]
Florida-U 63 Beam (Index 20263)	Lb/ft	1440[4]
Florida-U 72 Beam (Index 20272)	Lb/ft	1545[4]
Inverted-T Beam (20-inch) (Index 20320)	Lb/ft	270
Florida-I 36 Beam (Index 20036)	Lb/ft	840
Florida-I 45 Beam (Index 20045)	Lb/ft	906
Florida-I 54 Beam (Index 20054)	Lb/ft	971
Florida-I 63 Beam (Index 20063)	Lb/ft	1037
Florida-I 72 Beam (Index 20072)	Lb/ft	1103
Florida-I 78 Beam (Index 20078)	Lb/ft	1146
Florida-I 84 Beam (Index 20084)	Lb/ft	1190
Florida-I 96 Beam (Index 20096)	Lb/ft	1278

1 The Future Wearing Surface allowance applies only to minor widenings of existing bridges originally designed for a Future Wearing Surface, regardless of length (see ***SDG*** 7.2 Widening Classifications and Definitions) or new short bridges (see ***SDG*** 4.2. Bridge Length Definitions)
2 Unit load of metal forms and concrete required to fill the form flutes. Apply load over the projected plan area of the metal forms.
3 Weight of buildup concrete for camber and cross slope not included.
4 Weight of interior intermediate or end diaphragms not included.

2.3 SEISMIC PROVISIONS [3.10.9][3.10.9.2][4.7.4]

2.3.1 General

All bridges shall meet the seismic design requirements except the exempted bridges. For exempted bridges, only the minimum bearing support dimensions need to be satisfied as required by ***LRFD*** [4.7.4.4]. Exempted bridges include those with design spans 75' or less. Simple or continuous spans superstructures supported on all elastomeric bearings are also exempt.

For all non-exempt single span bridges, the horizontal design connection force in the restrained direction between the substructure and the superstructure shall be 0.05 times the tributary permanent loads. For all other non-exempt bridges, the horizontal design connection force in the restrained direction between the superstructure and substructure shall be 0.12 times the tributary permanent loads. The acceleration coefficient, $\mathbf{A_S}$, for the state of Florida is less than 0.05. Only the connections between the superstructure and substructure need to be designed for the seismic forces.

2.3.2 Seismic Design for Widenings

A. When seismic design is required for a major widening (see definitions in ***SDG*** Chapter 7), all bridge elements must comply with the seismic provisions for new construction.

B. FDOT will consider seismic provisions for minor widenings on an individual basis.

2.3.3 Lateral Restraint

When lateral restraint of the superstructure is required due to seismic loading, comply with the provisions and requirements of ***SDG*** Chapter 6, "Lateral Restraint."

2.4 WIND LOADS (Rev. 01/12)

Replace ***LRFD*** [3.8.1.1] and [3.8.1.2] with the following. ***LRFD*** [3.8.1.3] and [3.8.2] are not meant to be replaced or modified. Wind load shall be the pressure of the wind acting horizontally on a vertical projection of the exposed area of a structure or vehicles. For trusses and arches, the full design wind pressure, P_Z, in Equation 2-1 shall be applied to the windward chord and 50% of P_Z shall be applied to the leeward chord.

2.4.1 Wind Pressure on Structures: WS

A. General

The design wind pressure shall be computed using the following equation:

$$P_z = 2.56 \times 10^{-6} K_z V^2 G C_p \qquad \text{[Eq. 2-1]}$$

Where:

P_z = Design wind pressure (ksf)
K_z = Velocity pressure exposure coefficients (2.4.1.D)
V = Basic wind speed (2.4.1.C) (mph)
G = Gust effect factor (2.4.1.E)
C_p = Pressure coefficient (2.4.1.F)

Pressures specified herein shall be assumed to be caused by a basic wind speed, **V**. Wind speed higher than shown in Table 2.4.1-2 may be used if warranted by site historical data. For site conditions elevated considerably above the surrounding terrain, such as hills or escarpments, where the influence of ground on the wind is reduced, consideration must be given to using higher pressures at heights exceeding 33 feet.

For Strength III and Service IV Load Combination Limit States, the total unfactored wind loading shall not be less than 0.30 klf for beam or girder spans, and not less than 0.30 klf in the plane of a windward chord and 0.15 klf in the plane of the leeward chord on truss and arch components.

B. Load Combinations and Load Factors

All load combinations according to ***LRFD*** Table 3.4.1-1 shall be considered in design using equation 2-1 for the calculation of wind pressure on structures loads (WS). The load factor γ_{WS} and basic wind speed for WS shall be modified according to the following table:

Table 2.4.1-1 Load Factors

LOAD COMBINATION LIMIT STATE	γ_{WS}	BASIC WIND SPEED, V (MPH)
STRENGTH III	1.40	Per Table 2.4.1-2
STRENGTH V	1.30	70
SERVICE I	1.00	70
SERVICE IV	0.60	Per Table 2.4.1-2

γ_{WS} during construction shall be determined from ***SDG*** 2.4.3.

C. Basic Wind Speed

The basic wind speed, V, shall be taken as 70 MPH for the Strength **V** and Service I limit states. The basic wind speed for the Strength III and Service IV limit state shall be determined from the table below, which was derived from the ASCE 7-05 wind speed map.

Table 2.4.1-2 Basic Wind Speed, V

County (Dist)	Basic Wind Speed (mph)	County (Dist)	Basic Wind Speed (mph)	County (Dist)	Basic Wind Speed (mph)
Alachua (2)	110	Hardee (1)	110	Okeechobee (1)	130
Baker (2)	110	Hendry (1)	130	Orange (5)	130
Bay (3)	130	Hernando (7)	130	Osceola (5)	130
Bradford (2)	110	Highlands (1)	130	Palm Beach (4)	150
Brevard (5)	130	Hillsborough (7)	130	Pasco (7)	130
Broward (4)	150	Holmes (3)	130	Pinellas (7)	130
Calhoun (3)	130	Indian River (4)	150	Polk (1)	110
Charlotte (1)	130	Jackson (3)	110	Putnam (2)	110
Citrus (7)	130	Jefferson (3)	110	St. Johns (2)	130
Clay (2)	110	Lafayette (2)	110	St. Lucie (4)	150
Collier (1)	150	Lake (5)	110	Santa Rosa (3)	150
Columbia (2)	110	Lee (1)	130	Sarasota (1)	130
DeSoto (1)	130	Leon (3)	110	Seminole (5)	130
Dixie (2)	130	Levy (2)	130	Sumter (5)	110
Duval (2)	130	Liberty (3)	130	Suwannee (2)	110
Escambia (3)	150	Madison (2)	110	Taylor (2)	130
Flagler (5)	130	Manatee (1)	130	Union (2)	110
Franklin (3)	130	Marion (5)	110	Volusia (5)	130
Gadsden (3)	110	Martin (4)	150	Wakulla (3)	130
Gilchrist (2)	110	Miami-Dade (6)	150	Walton (3)	130
Glades (1)	130	Monroe (6)	150	Washington (3)	130
Gulf (3)	130	Nassau (2)	130		
Hamilton (2)	110	Okaloosa (3)	130		

D. Velocity Pressure Exposure Coefficient, $\mathbf{K_z}$

The velocity pressure exposure coefficient, $\mathbf{K_z}$, shall be determined using the following equation:

$$\mathbf{K_z = 2.01(z/900)^{(0.2105)} \geq 0.85} \qquad \text{[Eq. 2-2]}$$

Where:

z = height to centroid of exposed area (ft)

E. Gust Effect Factor, **G**

The gust effect factor, **G**, shall be taken as:

- 0.85 for bridges with spans < 250 feet and a height < 75 feet
- Bridges with spans > 250 feet or a height > 75 feet - **G** shall be evaluated according to ASCE/SEI 7-05 Section 6.5.8.
- 0.85 for ground mounted sound barriers

F. Pressure Coefficient, $\mathbf{C_p}$

The pressure coefficient, $\mathbf{C_p}$, shall be taken as:

- 1.1 for bridge superstructures
- 1.6 for bridge substructures
- Truss bridges - $\mathbf{C_p}$ shall be determined per the guidelines given in ASCE/SEI 7-05.
- 1.2 for ground mounted sound barriers

G. Loads from Superstructures

The wind direction for design shall be that which produces the greatest force effect on the component under investigation. Where the wind is not taken as normal to the structure, the components in the lateral and longitudinal direction of the bridge span may be determined by multiplying the design wind pressure, $\mathbf{P_Z}$, by the values specified in Table 2.4.1-3 for various angles of wind direction. The skew angle shall be taken as measured from a line perpendicular to the longitudinal axis. The wind direction for design shall be that which produces the extreme force effect on the component under investigation. The transverse and longitudinal pressures shall be applied simultaneously.

Table 2.4.1-3 Wind Pressure Factors for Various Angles of Attack

Skew Angle of Wind (Degrees)	Trusses Columns and Arches		Girders	
	Lateral Load Factor	Longitudinal Load Factor	Lateral Load Factor	Longitudinal Load Factor
0	1.0	0.0	1.0	0.0
15	0.94	0.16	0.88	0.12
30	0.87	0.37	0.82	0.24
45	0.63	0.55	0.66	0.32
60	0.32	0.67	0.34	0.38

H. Forces Applied Directly to the Substructure

The transverse and longitudinal forces to be applied directly to the substructure shall be calculated by the equation for $\mathbf{P_z}$, Equation 2-1. For wind directions taken skewed to the substructure, this force may be resolved into components parallel and perpendicular to the pier or bent.

2.4.2 Wind Loads on Other Structures

For wind loading on sign, lighting, and signal structures, see ***Volume 9***.

2.4.3 Wind Loads During Construction

A. See also ***SDG*** 6.8 Erection Scheme and Beam/Girder Stability.

B. Use construction wind loads to evaluate girder stability during construction.

C. Calculate wind loads during construction per the equation for design wind pressure, $\mathbf{P_z}$ [Eq. 2-1], except use the load factor $(\gamma_{\mathbf{WS}})$ and basic wind speed for WS in Table 2.4.3-1 and the pressure coefficient, $\mathbf{C_p}$, in Table 2.4.3-2.

Table 2.4.3-1 Load Factors During Construction

Load Combination Limit State	$(\gamma_{\mathbf{WS}})$	Basic Wind Speed, V (mph)	
		Construction Inactive	Construction Active
Strength III	1.25	Per Table 2.4.1-2 x $\mathbf{R_E}$	20 mph or expected wind speed, if higher
Service I	1.0	Per Table 2.4.1-2 x $\mathbf{R_E}$	20 mph or expected wind speed, if higher

Where:

Construction Inactive = periods during which construction activities associated with the superstructure do not take place. Ex: For a typical girder bridge, this includes nonwork hours during which the girder bracing is to be present.

Construction Active = periods during which construction activities take place. Ex: For a typical girder bridge, this includes girder erection, form placement and deck concrete placement. It can be assumed that the construction active period for deck placement is in effect until the deck concrete hardens.

$\mathbf{R_E}$ = 0.60 if the exposure period is less than one year. The exposure period is defined as the time period for which temporary load cases of the superstructure exist. For example, the exposure period for a girder bridge is defined as the time period from when the girder is set on the pedestals until the girder is made composite with the bridge deck, and the exposure period for a segmental bridge is defined as the time period from when segments are placed until spans are made continuous.

Note: Check limit states separately for Construction Inactive and Construction Active wind speeds.

Table 2.4.3-2 Pressure Coefficient During Construction

Component Type	Construction Condition	Pressure Coefficient (C_p)
I-Shaped Girder Superstructure	Deck forms not in place	2.2
	Deck forms in place	1.1
U-Shaped and Box Girder Superstructure	Deck forms not in place	1.5
	Deck forms in place	1.1
Flat Slab or Segmental Box Girder Superstructure	Any	1.1
Substructure	Any	1.6

2.5 WAVE LOADS

When bridges vulnerable to coastal storms cannot practically meet the wave crest clearance requirement of the ***Drainage Manual*** Section 4.6.1, all relevant design information shall be submitted to the SDO to assist in the following determinations:

1. The level of importance of a proposed bridge ("Extremely Critical", "Critical", or "Non-Critical"; See Commentary below)
2. The design strategy and the associated performance objective ("Service Immediate" or "Repairable Damage"; See ***AASHTO Guide Specifications for Bridges Vulnerable to Coastal Storms*** Article 5.1)
3. The appropriate level of analysis (Level I, II, or III; See ***AASHTO Guide Specifications for Bridges Vulnerable to Coastal Storms*** Article 6.2)

The above determinations will be made by the SDO in consultation with the DSDO, Traffic Engineer, Environmental Engineer, Hydraulic Engineer, and/or Coastal Engineer and will be included in the PD & E documents. As a minimum, the items listed below will be considered in the determinations:

- Age and condition of existing bridge structure and the feasibility/cost of retrofitting to resist wave forces (if applicable)
- Proposed bridge location and elevation alternatives (elevation relative to the design wave crest)
- Estimated cost of elevating the superstructure above the "wave crest clearance" (1 ft above the design wave crest), and/or the justification of why it cannot be done
- Affect of varying wave loading on construction costs (due to location and/or height adjustments)
- Existing and projected traffic volumes
- Route impacts on local residents and businesses
- Availability and length of detours

- Evacuation/emergency response routes
- Duration/difficulty/cost of bridge damage repair or replacement
- Other safety and economic impacts due the loss of the structure

Except where bridges satisfy the “wave crest clearance” or are deemed “Non-Critical”, the structures designer shall calculate and apply wave forces according to the AASHTO Guide Specifications for Bridges Vulnerable to Coastal Storms using the determinations defined above along with the necessary hydraulic data provided by the coastal engineer.

Commentary: Selecting a design strategy will depend on the importance/criticality of the bridge considering the consequences of bridge damage caused by wave forces. If a bridge is deemed “Extremely Critical”, it would typically be designed to resist wave forces at the Strength Limit State to the “Service Immediate” performance level. If a bridge is deemed “Critical”, it would generally be designed to resist the wave forces at the Extreme Event Limit State to a “Repairable Damage” performance level. Bridges that are deemed “Non-Critical” will not be evaluated for wave forces.

2.6 VEHICULAR COLLISION FORCE [3.6.5]

2.6.1 General

A. Design structures according to ***LRFD*** [3.6.5.2] and this section.

B. As used in this section, "setback distance" is defined by ***LRFD*** [3.6.5.1] and "clear zone" and "horizontal clearance" are as defined by the ***PPM*** Volume 1, Chapter 4.

C. Consider planned widenings or future realignments of lower roadways when establishing limits of setback distances and clear zones or horizontal clearance limits.

D. When a ground mounted Test Level 5 (TL-5) barrier is required, select a 42-inch or 54-inch tall Test Level 5 (TL-5) Pier Protection Barrier based on the location of the barrier relative to the pier it is shielding in accordance with the requirements of ***LRFD*** and ***Design Standard*** 411.

2.6.2 End Bents and Retaining Walls

A. End bents behind conventional cantilever retaining walls or within mechanically stabilized earth walls are considered to be sufficiently shielded with respect to ***LRFD*** [3.6.5] and do not require additional protection from vehicular collision.

B. Retaining walls generally do not require protection from vehicular collision.

C. Roadside Barriers may still be required in these locations in accordance with the requirements of the ***PPM*** Volume 1, Chapter 4.

2.6.3 New Structures Over or Adjacent to Roadways

A. Design all piers located within the setback distance for the ***LRFD*** equivalent static force regardless of the type pier protection used. Utilize the shear reinforcement required at the pier base to a distance of 8 feet above the adjacent ground surface.

B. Provide roadside barriers in accordance with ***PPM***, Volume 1, Chapter 4 for piers located within the clear zone or horizontal clearance limits.

C. Do not use pile bents within the setback distance.

2.6.4 Roadway Work Beneath or Adjacent to Existing Structures (Rev. 01/12)

A. For existing piers located within the setback distance that are theoretically capable of resisting the ***LRFD*** equivalent static force, provide roadside barriers in accordance with the ***PPM***, Volume 1, Chapter 4 or Chapter 25, as applicable, unless a need (other than pier protection) can be documented to provide ***Design Standard*** Index 411, Pier Protection Barriers or other TL-5 barriers.

B. Consider local crash histories of both large and small vehicles, site conditions, shoulder widths, traffic counts, traffic mixes, design speed, sight distances, pedestrian facilities, utilities and redundancy within the pier when documenting the need to provide 42-inch or 54-inch Pier Protection Barriers.

C. For existing piers and pile bents located within the setback distance that are not theoretically capable of resisting the ***LRFD*** equivalent static force and that are unshielded, shielded by guardrail or shielded by non-crash tested barrier wall:

   1. When RRR criteria applies and on freeway resurfacing projects, determine the need for roadside barriers in accordance with the ***PPM***, Volume 1, Chapter 4 or Chapter 25, as applicable. New guardrail and existing guardrail conforming to the requirements of ***Design Standard*** 400 shall be used. Existing guardrail that does not conform to the requirements of ***Design Standard*** 400 must be upgraded or replaced. If there is insufficient deflection space for guardrail and new concrete barrier wall is determined to be required, provide ***Design Standard*** 411 Pier Protection Barriers or other TL-5 barriers in lieu of ***Design Standard*** 410, Concrete Barrier Walls. Where required sight distances cannot be maintained using ***Design Standard***, 411 Pier Protection Barriers or other TL-5 barriers, instead provide ***Design Standard*** 410, Concrete Barrier Walls to shield piers. An exception for pier strength is required.

   2. When new construction criteria applies except on freeway resurfacing projects, provide ***Design Standard*** 411, Pier Protection Barriers or other TL-5 barriers.

D. For existing piers and pile bents located within the setback distance that are not theoretically capable of resisting the ***LRFD*** equivalent static force and that are shielded by ***Design Standard*** 410, New Jersey Shape or F-Shape Concrete Barrier Wall, leave the existing barrier wall in place unless a need can be documented to either retrofit the pier as described below or replace the existing barrier wall with a

Design Standard 411, Pier Protection Barrier or other TL-5 barrier. Consider local crash histories of both large and small vehicles, site conditions, shoulder widths, traffic counts, traffic mixes, design speed, sight distances, pedestrian facilities, utilities and redundancy within the pier or bent when documenting the need to replace the existing barrier wall.

E. In lieu of providing 42-inch or 54-inch Pier Protection Barriers, consider providing integral crash walls, struts, collars, etc. to retrofit or strengthen existing piers and pile bents to resist the ***LRFD*** equivalent static force. This approach may be appropriate where the use of 42-inch or 54-inch Pier Protection Barriers would adversely affect adjacent pedestrian facilities, utilities, sight distances on adjacent roadways, etc.

2.6.5 Widening of Existing Structures Over or Adjacent to Roadways

A. Design new columns of piers lengthened for bridge widenings that are located within the setback distance for the ***LRFD*** equivalent static force. Utilize the shear reinforcement required at the column base to a distance of eight feet above the adjacent ground surface. Maintain the scale and proportions of existing columns when designing the new columns.

B. Provide ***Design Standards*** 400, 410 or 411 barriers as described above for existing structures. Lengthen existing installations of ***Design Standard*** 410, Concrete Barrier Walls as required to shield the entire lengthened piers unless a need can be documented to replace the barriers with ***Design Standard*** 411, Pier Protection Barriers or other TL-5 barriers.

C. Pile bents may be lengthened within the clear zone.

2.6.6 Bridge Superstructures Adjacent to Piers of Other Bridges

A. Provide 42-inch tall TL-5 bridge traffic railings on lower level bridges adjacent to pier columns of upper level bridges (e.g. bridges on multi-level interchanges) if the gutter line of the lower level bridge traffic railing is within 5 feet of the upper level bridge pier column.

B. Do not design the upper level bridge pier column for the ***LRFD*** equivalent static force at this location. Evaluate existing installations on a case by case basis to determine the potential need to retrofit the existing lower bridge traffic railing.

2.6.7 Structures Over or Adjacent to Railroad and Light Rail Tracks

A. The following information is based on requirements of the current ***American Railway Engineering and Maintenance-of-Way Association (AREMA)*** ***Manual for Railway Engineering*** and is intended only as a guide to the minimum requirements for piers adjacent to railroad tracks and crash walls used to shield them. Follow the ***AREMA*** specifications and the specific railroad requirements in identifying the need for and the designing of crash walls.

B. Crash walls are required for piers located 25 feet or less from the centerline of the track, measured perpendicular to the track, unless the size of the pier satisfies the criteria for heavy construction. A pier or column shall be considered of heavy construction if it has a minimum cross-sectional area of 30 square feet. The minimum dimension shall be 2'-6", and the larger dimension of rectangular piers or columns shall be parallel to the track. Multiple column piers with individual columns meeting the requirements of heavy construction do not require crash walls.

C. Crash walls for piers located from 12 to 25 feet from the centerline of track shall have a minimum height of 6 feet above the top of rail. Piers less than 12 feet from the centerline of track shall have a minimum crash wall height of 12 feet above the top of rail.

D. The face of the crash wall shall present a smooth surface, extending a distance of at least 6-inches beyond the face of the column on the side of the wall adjacent to the track. The crash wall shall extend at least 4 feet below the lowest surrounding grade. The crash wall shall be anchored with dowels to each column and footing unless the crash wall completely encapsulates the column or pile by at least 6-inches on the front and back face. The bottom of footings shall be at or below the bottom of the crash wall. If piles are used to support the crash wall, they shall typically be of the same type and size as the piles used to support the bridge and shall be driven to the minimum penetration required by the ***Specifications***.

E. The crash wall shall be at least 2'-6" thick. When a pier consists of a single column, the crash wall shall be a minimum of 12 feet in length, parallel to the track, and centered longitudinally on the pier. When two or more light columns compose a pier, the crash wall shall connect the columns and extend at least 1 foot beyond the outermost columns, parallel to the track.

F. Lengthen existing crash walls shielding existing piers or bents that are lengthened to accommodate a bridge widening. The lengthened section of crash wall shall meet the requirements for new construction.

G. Construct new crash walls to shield existing piers or bents that are lengthened to accommodate a bridge widening if the piers or bents do not meet the criteria for heavy construction and do not have existing crash walls.

H. For piers located more than 25 feet from the centerline of track but still within the setback distance, provide project specific 42-inch or 54-inch tall pier protection barriers based on ***Design Standards*** Index 411 or design the piers for the ***LRFD*** equivalent static force if pier protection barriers are not used. Consideration may be given to providing protection for bridge piers located beyond the setback distance as conditions warrant. In making this determination, account shall be taken of such factors as horizontal and vertical alignment of the track, embankment height, and an assessment of the consequences of serious damage in the case of a collision.

I. These requirements generally do not apply to automated people mover systems. Evaluate the need for pier protection on a project specific basis for people mover systems.

2.6.8 Design and Analysis Methods (Rev. 01/12)

A. In addition to utilizing the general design recommendations presented in ***LRFD*** (except as noted herein), the EOR must also use the following design and analysis methods:

B. Consider the vehicular collision force per ***LRFD*** as a point load acting on the pier column (no distribution of force due to frame action within the pier, foundation and superstructure). Further analysis of the piles, footings, pier cap, other columns, etc., is not required.

C. Check the column shear capacity assuming failure along two shear planes inclined at 45 degree angles above and below the point of force application.

D. The impacted structure is expected to remain stable and to continue to support the bridge superstructure subsequent to the collision event. Note that resistance factors are taken as 1.0, inelastic behavior is anticipated and proper detailing is required.

*Commentary: **Design Standards** Index 411 Pier Protection Barriers complies with the requirements of **LRFD** [3.6.5.1] for **NCHRP Report 350** Test Level 5 barriers used for pier protection. The intended purpose of these barriers is to shield a pier from traffic, primarily large trucks and tractor trailers, so as to reduce the separate but related potentials for damage to the pier and collapse of the bridge that might be the results of a truck collision with a pier.*

Consider overall safety at a given location, including vehicle and pedestrian traffic, when selecting the appropriate type of pier protection to be used. Consider the effect 42-inch and 54-inch tall barriers might have on sight distances, particularly near intersections, and the end treatments that will be required for these taller barriers.

*Generally for new construction, reinforced concrete pier columns can be designed to resist the vehicular collision force per **LRFD**. Therefore, only a **Design Standards** Index 400 guardrail or Index 410 Concrete Barrier Wall might be necessary to shield traffic from the pier.*

*The 32-inch tall Concrete Barrier Wall shown in **Design Standards** Index 410 has provided overall satisfactory performance in shielding bridge piers for many years. Therefore, replacement of existing installations of these walls is not warranted at most locations, in particular on low speed roadways, unless there is a crash history at the site that indicates otherwise.*

Field observation of bridge piers that have been impacted and crash testing of other roadside hardware items indicate little opportunity for an impacted structure to distribute the dynamic impact force during the extremely brief duration of a crash event. The theoretical behavior of a modeled pier when loaded with the equivalent static impact force will likely be substantially different than the behavior of an actual pier subjected to the dynamic impact force from a vehicle crash. Thus a more refined analysis of the force distribution within the pier, foundation and into the superstructure using the equivalent static force is not warranted.

*As stated in the **AREMA Manual for Railway Engineering,** the crash wall provisions are not intended to create a structure that will resist the full impact of a direct collision by a loaded train at high speed. Rather, the intent is to reduce the damage caused by shifted loads or derailed equipment that might impact a pier.*

2.7 FORCE EFFECTS DUE TO SUPERIMPOSED DEFORMATIONS [3.12]

2.7.1 Uniform Temperature (Rev. 01/12)

A. In lieu of ***LRFD*** [3.12.2], Procedures A and B, substitute the following table:

Table 2.7.1-1 Temperature Range by Superstructure Material

Superstructure Material	Temperature Range (Degrees Fahrenheit)			
	Mean	High	Low	Range
Concrete Only	70	105	35	70
Concrete Deck on Steel Girder	70	110	30	80
Steel Only	70	120	30	90

B. Note the minimum and maximum design temperatures on drawings for girders, expansion joints and bearings.

C. For detailing purposes, take the normal mean temperature from this table.

D. In accordance with ***LRFD*** Table 3.4.1-1, base temperature rise and fall on 120% of the maximum value given in Table.

2.7.2 Temperature Gradient [3.12.3]

Delete the second paragraph of ***LRFD*** [3.12.3] and substitute the following:

"Include the effects of Temperature Gradient in the design of continuous concrete superstructures only. The vertical Temperature Gradient shall be taken as shown in ***LRFD*** Figure 3.12.3-2."

2.8 BARRIERS AND RAILINGS [4.6.2.2]

2.8.1 Distribution for Beam-Slab Bridges

Distribute barrier and railing permanent loads in accordance with ***LRFD*** [4.6.2.2].

2.8.2 Limit State Checks

Traffic and pedestrian railings and raised sidewalks are not to be used for the determination of deflections or for service or fatigue limit state checks.

2.9 LIVE LOAD DISTRIBUTION FACTORS [4.6.2.2][4.6.3.1] (Rev. 01/12)

A. For bridge superstructures meeting the requirements of ***LRFD*** [4.6.2.2], live load distribution factors shall not be less than the values given by the approximate methods. In ***LRFD*** [4.6.2.2.2], extend the Range of Applicability as follows:

1. ***LRFD*** Table 4.6.2.2.2.b-1: for Florida-U beam bridges (Type "c" cross-section) change the depth parameter range to 18 < d <72, and the span length parameter range to 20 < L < 170; for prestressed flat slab bridges (Type "f" cross-section) change the width parameter to 29 < b < 60; and for prestressed concrete I-beam bridges (Type "k" cross-section) change the longitudinal stiffness parameter range to 10,000 < Kg < 8,500,000.

2. ***LRFD*** Table 4.6.2.2.3.a-1: for Florida-U beam bridges (Type "c" cross-section) change the depth parameter range to 18 < d < 72, and the span length parameter range to 20 < L < 170; and for prestressed flat slab bridges (Type "f" cross-section) change the moment of inertia range to 10,000 < I < 610,000, and the width parameter to 29 < b < 60.

3. ***LRFD*** Table 4.6.2.2.3.b-1: for prestressed flat slab bridges (Type "f" cross-section) change the width parameter to 29 < b < 60.

4. ***LRFD*** Table 4.6.2.2.3.c-1: for Florida-U beam bridges (Type "c" cross-section) change the depth parameter range to 18 < d < 72 and the span length parameter range to 20 < L < 170; and for prestressed flat slab bridges (Type "f" cross-section) change the width parameter to 29 < b < 60.

*Commentary: The **LRFD** distribution factor equations are largely based on work conducted in NCHRP Project 12-26. When one or more of the parameters are outside the listed range of applicability, the equation could still remain valid, particularly when the value(s) is (are) only slightly outside the range. The extended values given in the SDG are considered slightly outside of the **LRFD** range of applicability. If one or more of the parameters greatly exceed the range of applicability, engineering judgment needs to be exercised.*

B. Delete the third paragraph of ***LRFD*** [4.6.3.1] and add the following:

When a refined method of analysis is used, indicate the name, version, and date of the software used on the FDOT Load Rating Summary Tables.

C. When widening existing AASHTO and Florida Bulb-T beam bridges with Florida-I Beams, the live load distribution factors may be calculated using the ***LRFD*** [4.6.2.2] approximate method.

*Commentary: The **LRFD** approximate method produces distribution factors that are conservative when compared to refined analyses even though the beam stiffnesses and spacings vary significantly.*

2.10 REDUNDANCY AND OPERATIONAL IMPORTANCE [1.3.4 AND 1.3.5] (Rev. 01/12)

A. Redundancy [1.3.4]

Delete the Redundancy factors, η_R, in ***LRFD*** [1.3.4] and use η_R = **1.0** unless a revised value is established in the tables below.

Redundancy Factors, η_R for Flexural and Axial Effects	
Structure Type	**η_R Factor**
Welded Members in Two Truss/Arch Bridges	1.20
Floor beams with Spacing > 12 feet and Non-Continuous Stringers and Deck	1.20
Floor beams with Spacing > 12 feet and Non-Continuous Stringers but with Continuous Deck	1.10
Steel Straddle Bents or Piers	1.20

Redundancy Factors, η_R for Steel Girder Bridges						
Number of Girders in Cross Section	**Span Type**	**# of Hinges required for Mechanism**	**I-Girders**		**Box Girders**	
			With Cross-Frames[1]	**Without Cross-Frames**	**With Exterior Diaphragms**	**Without Exterior Diaphragms**
2	Interior	3	1.20	Not Permitted	1.00	1.20
	End	2	1.20	Not Permitted	1.00	1.20
	Simple	1	1.20	Not Permitted	1.05	1.20
3 or 4	Interior	3	1.00	Not Permitted	1.00	1.00
	End	2	1.00	Not Permitted	1.00	1.05
	Simple	1	1.00	Not Permitted	1.00	1.10
5 or more	Interior	3	1.00	Not Permitted	1.00	1.00
	End	2	1.00	Not Permitted	1.00	1.00
	Simple	1	1.00	Not Permitted	1.00	1.05

1 With at least three evenly spaced intermediate cross-frames or floor beams (excluding end cross-frames) in each span.

B. Operational Importance [1.3.5]

Delete the operational importance factors, η_I, in ***LRFD*** [1.3.5] and use $\eta_I = \mathbf{1.0}$ unless otherwise approved by the Department. For bridges considered critical to the survival of major communities, or to the security and defense of the United States, use $\eta_I = \mathbf{1.05}$.

2.11 VESSEL COLLISION [3.14]

2.11.1 General [3.14.1]

The design of all bridges over navigable waters must include consideration for possible Vessel Collision (usually from barges or ocean going ships). Conduct a vessel risk analysis to determine the most economical method for protecting the bridge. The marine vessel traffic characteristics are available for bridges located across inland waterways and rivers carrying predominately barges. The number of vessel passages and the vessel sizes are embedded as an integral part of the Department's Vessel Collision Risk Analysis Software. The vessel traffic provided is based on the year 2000 and an automatic traffic escalation factor is provided by the software for the various past points which one selects. It is recommended that the engineer compare the total vessel trip count being used in the risk analysis with the latest total vessel trip count provided for the appropriate section of waterway as published by the Army Corps. The escalation factor provided by the software can be modified by the engineer. The importance classification is provided for existing bridge sites and will be provided by the Department for any new bridge location. Port facilities and small terminals handling ships are not covered by the catalog of vessel traffic characteristics. In these cases, on-site investigation is required to establish the vessel traffic characteristics. Utilize the ***LRFD*** specification and comply with the procedure described hereinafter.

2.11.2 Research and Information Assembly

(When not provided by the Department)

A. Data Sources:

1. U.S. Army Corps of Engineers, Waterborne Commerce Statistics Center, P.O. Box 61280, New Orleans, LA 70161. Telephone: (504) 862-1472.
2. U.S. Army Corps of Engineers, Navigation Data Center (http://www.iwr.usace.army.mil/ndc/publications.htm)
3. U.S. Army Corps of Engineers, "Waterborne Commerce of the United States (WCUS), Parts 1 & 2," Water Resources Support Center (WRSC), Fort Belvoir, VA.
4. U.S. Army Corps of Engineers, "Waterborne Transportation Lines of the United States," WRSC, Fort Belvoir, VA.
5. U.S. Army Corps of Engineers (COE), District Offices.
6. U.S. Coast Guard, Marine Safety Office (MSO).
7. Port Authorities and Water Dependent Industries.

8. Pilot Associations and Merchant Marine Organizations.
9. National Oceanic and Atmospheric Administration (NOAA), "Tidal Current Tables; Tidal Current Charts and Nautical Charts," National Ocean Service, Rockville, Maryland.
10. Bridge tender record for bascule bridge at the District Maintenance Office.
11. Local tug and barge companies.

B. Assembly of Information:

The EOR must assemble the following information:

1. Characteristics of the waterway including:
   a. Nautical chart of the waterway.
   b. Type and geometry of bridge.
   c. Preliminary plan and elevation drawings depicting the number, size and location of the proposed piers, navigation channel, width, depth and geometry.
   d. Average current velocity across the waterway.
2. Characteristics of the vessels and traffic including:
   a. Ship, tug and barge sizes (length, width and height)
   b. Number of passages for ships, tugs and barges per year (last five years and prediction to end of 25 years in the future).
   c. Vessel displacements.
   d. Cargo displacements (deadweight tonnage).
   e. Draft (depth below the waterline) of ships, tugs and barges.
   f. The overall length and speed of tow.
3. Accident reports.
4. Bridge Importance Classification.

2.11.3 Design Vessel [3.14.4][3.14.5.3]

When utilizing the FDOT's Mathcad software for conducting the Vessel Collision risk analysis, a "Design Vessel," which represents all the vessels, is not required. The software computes the risk of collision for several vessel groups with every pier. When calculating the geometric probability, the overall length of each vessel group (LOA) is used instead of the LOA of a single "Design Vessel."

2.11.4 Design Methodology - Damage Permitted [3.14.13]

In addition to utilizing the general design recommendations presented in ***LRFD*** (except as noted herein), the EOR must also use the following design methodology:

A. At least one iteration of secondary effects in columns must be included; i.e., axial load times the initial lateral deflection.

B. The analysis must include the effects of force transfer to the superstructure. Bearings, including neoprene pads, transfer lateral forces to the superstructure. Analysis of force transfer through the mechanisms at the superstructure/ substructure interface must be evaluated by use of generally accepted theory and practice.

C. The nominal bearing resistance (R_n) of axially loaded piles must be limited to the maximum pile driving [RC] resistance values given in ***SDG*** Chapter 3. Load redistribution is not permitted when the maximum pile driving [RC] resistance is reached.

D. Lateral soil-pile response must be determined by concepts utilizing a coefficient of sub-grade modulus provided or approved by the Geotechnical Engineer. Group effects must be considered.

E. For the designer's Vessel Collision risk analysis, the FDOT will determine whether a bridge is critical or non-critical. A list is provided with the Department's software.

F. Use Load Combination "Extreme Event II" as follows:

$$(\mathbf{PermanentLoads}) + \mathbf{WA} + \mathbf{FR} + \mathbf{CV}$$

With all load factors equal to 1.0. Nonlinear structural effects must be included and can be significant. It is anticipated that the entire substructure (including piles) may have to be replaced and the superstructure repaired if a bridge is subjected to this design impact load; however, the superstructure must not collapse.

Commentary: Further refinement or complication of this load case is unwarranted.

G. Distribute the total risk per pier as uniformly as possible while allowing practical construction considerations. Ignore any benefit provided to the channel piers if a fender system is provided.

H. Pier strengths for the first two piers on each side of the channel shall be proportioned such that the Annual Frequency of Collapse per pier shall be less than the Acceptable Risk of Bridge Collapse divided by the total number of piers within a distance of 6 times LOA of the longest vessel group.

2.11.5 Widenings

Major widening of bridges spanning navigable waterways must be designed for Vessel Collision. Minor widenings of bridges spanning navigable waterways will be considered on an individual basis for Vessel Collision design requirements. (See ***SDG*** 7.2)

2.11.6 Movable Bridges

For movable bridges, comply with the requirements of this chapter.

2.11.7 Main Span Length

A. The length of the main span between centerlines of piers at the navigable channel must be based upon the Coast Guard requirements, the Vessel Collision risk analysis (in conjunction with a least-cost analysis), and aesthetic considerations.

B. Where the vessel traffic volume, at high level fixed bridges, is such that the risk analysis results in channel pier strength requirements in excess of 1,500 kips, a continuous girder superstructure is required. The channel span will be set at a minimum of 200 feet or as specified by the Department.

Commentary: Additional safety and structural redundancy is provided at bridge locations where large volumes of commercial traffic exist. Safety considerations and unknowns surrounding the probability of vessel collision justify the relatively small additional construction expense.

2.11.8 Scour with Vessel Collision [3.14.1]

A. Substructures must be designed for an extreme Vessel Collision load by a ship or barge simultaneous with scour. Design the substructure to withstand the following two Load/Scour (**LS**) combinations:

1. Load/Scour Combination 1:

$$\mathbf{LS}_{(1)} = \text{Vessel Collision @ 1/2 Long-term Scour} \qquad \text{[Eq. 2-3]}$$

Where:

Vessel Collision: Assumed to occur at normal operating speed.

Long-Term Scour: Defined in Chapter 4 of the ***FDOT Drainage Manual.***

2. Load/Scour Combination 2:

$$\mathbf{LS}_{(2)} = \text{Minimum Impact Vessel @ 1/2 100-Year Scour} \qquad \text{[Eq. 2-4]}$$

Where:

Min. Impact Vessel as defined in ***LRFD*** [3.14.1] with related collision speed.

100-Year Scour as defined in Chapter 4 of the ***FDOT Drainage Manual.***

B. When preparing the soil models for computing the substructure strengths, and when otherwise modeling stiffness, analyze and assign soil strength parameters to the soil depth that is subject to Local and Contraction Scour that may have filled back in. The soil model must utilize strength characteristics over this depth that are compatible with the type soil that would be present after having been hydraulically redeposited.

Commentary: In many cases, there may be little difference between the soil strength of the natural streambed and that of the soil that is redeposited subsequent to a scour event.

2.11.9 Application of Impact Forces [3.14.14]

When the length to width ratio (**L/W**) is 2.0 or greater for long narrow footings in the waterway, apply the longitudinal force within the limits of the distance that is equal to the length minus twice the width, (**L-2W**), in accordance with Figure 2.11.9-1.

Figure 2.11.9-1 Application of Longitudinal Vessel Impact Force on Long Footings

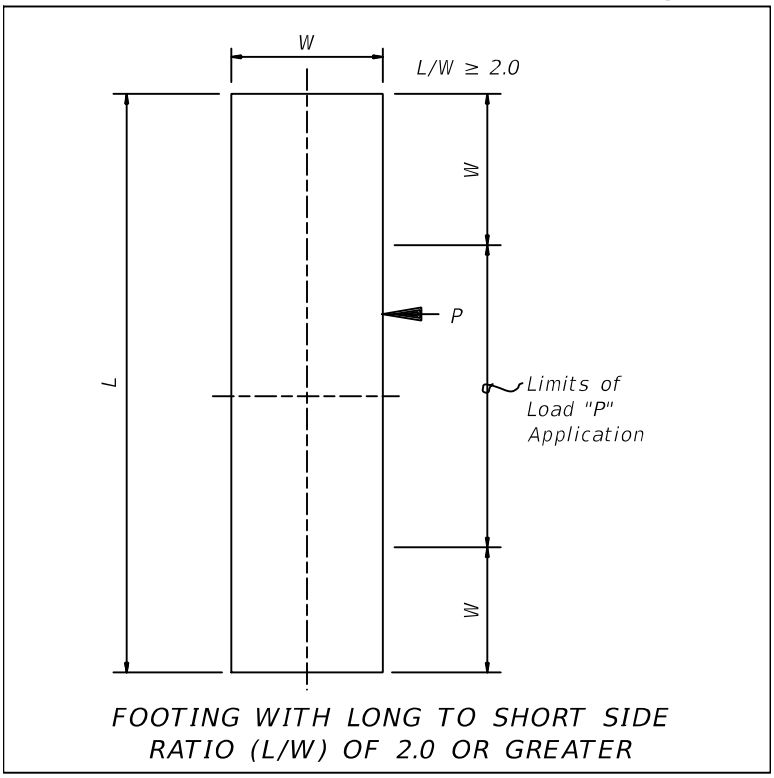

2.11.10 Impact Forces on Superstructure [3.14.14.2]

Apply Vessel Impact Forces (superstructure) in accordance with ***LRFD*** [3.14.14.2].

2.12 SUBSTRUCTURE LIMIT STATES (Rev. 01/12)

A. Limit State 1 (Always required) Conventional ***LRFD*** loadings (using load factor combination groups as specified in ***LRFD*** Table 3.4.1-1), but utilizing the most severe case of scour up to and including that from a 100 year flood event.

B. Limit State 2 (Applies only if vessel collision force is specified) Extreme event of Vessel Impact (using load factor combination groups as specified in the ***LRFD***) utilizing scour depths described in ***SDG*** 2.11.8.

C. Limit State 3 (Applies only if scour is predicted) Stability check during the superflood (most severe case of scour up to and including that from the 500-year flood) event.

Limit State 3

$$\gamma_p(\mathbf{DC}) + \gamma_p(\mathbf{DW}) + \gamma_p(\mathbf{EH}) + \mathbf{0.5}(\mathbf{L}) + \mathbf{0.5}(\mathbf{EL}) + \mathbf{1.0}(\mathbf{WA}) + \mathbf{1.0}(\mathbf{FR}) \qquad \text{[Eq. 2-5]}$$

Where, **L = LL + IM + CE + BR + PL**

(All terms as per ***LRFD***)

3 SUBSTRUCTURE, RETAINING WALLS AND SOUND BARRIERS (Rev. 01/12)

3.1 GENERAL (Rev. 01/12)

A. This Chapter supplements ***LRFD*** Sections [2], [5] and [10] and contains deviations from those sections. This Chapter also contains information and requirements related to soil properties, foundation types and design criteria, fender pile considerations, and cofferdam design criteria to be used in the design of bridge structures.

B. The Structural Engineer, with input from the Geotechnical and Hydraulic Engineers, must determine the structure loads and the pile/shaft section or spread footing configuration. The Structural Engineer and the Geotechnical Engineer must consider constructability in the selection of the foundation system. Issues such as existing underground and overhead utilities, pile-type availability (including Buy America provisions), use of existing structures for construction equipment, phase construction, conflicts with existing piles and structures, effects on adjacent structures, etc. must be considered in evaluating foundation design.

C. Do not use auger cast-in-place piles for bridge foundations. Use auger cast-in-place piles only for Sound Barrier or Perimeter Wall foundations; all other uses require a design variation approval by the State Structures Design Engineer.

D. Design all substructures to incorporate bearings or provide fixed connections to the superstructure. Freyssinet or other concrete hinges are not permitted.

E. Determine pile and drilled shaft loads and design footings and bent caps using plan pile and drilled shaft locations. Detail footings and bent caps taking into consideration pile driving and drilled shaft placement tolerances per ***Specification*** 455, see also ***SDM*** 12.5 and ***SDM*** 13.7.

3.2 GEOTECHNICAL REPORT

A. The District Geotechnical Engineer or the contracted Geotechnical firm will issue a Geotechnical Report for most projects. This report will include:

1. Detailed Soil conditions.
2. Foundation recommendations.
3. Design parameters.
4. Constructability considerations.
5. Background information that may assist the Structural Engineer in determining appropriate pile lengths.
6. Input data for COM624, FBPier, and other design programs when lateral loads are a major concern.
7. Completed FHWA Report ***Checklist and Guidelines for Review of Geotechnical Reports and Preliminary Plans and Specifications.***
8. Core boring drawings reflecting the foundation data acquired from field investigations.
9. Required Load tests.

B. The Geotechnical Engineer will contact the District Construction Office and District Geotechnical Engineer, as needed, to obtain local, site-specific foundation construction history.

C. The Report will be prepared in accordance with the Department's ***Soils and Foundations Handbook.*** Geotechnical Reports will conform to the ***FHWA Report Checklist and Guidelines for Review of Geotechnical Reports and Preliminary Plans and Specifications*** prepared by the Geotechnical and Materials Branch, FHWA, Washington, D.C., October 1985. Contact the District Geotechnical Engineer to receive a copy of this document.

D. In the event that a contracted geotechnical firm prepares the Geotechnical Report, both the State and District Geotechnical Engineers generally will review it for Category 2 Structures and the District Geotechnical Engineer for Category 1 Structures (See ***PPM***, Volume 1, Chapter 26 for category definitions).

E. Final acceptance of the report is contingent upon the District Geotechnical Engineer's approval. Concurrence by the State Geotechnical Engineer is required for all Category 2 Structures.

F. The contracted Geotechnical will work with the District Geotechnical Engineer throughout the course of the geotechnical activities.

G. Verify the scope of services, as well as the proposed field and laboratory investigations, with the District Geotechnical Engineer before beginning any operations.

3.3 FOUNDATION SCOUR DESIGN [2.6] (Rev. 01/12)

A. This is a multi-discipline effort involving Geotechnical, Structures, and Hydraulics/ Coastal Engineers. The process described below will often require several iterations. The foundation design must satisfactorily address the various scour conditions, and furnish sufficient information for the Contractor to provide adequate equipment and construction procedures. These three engineering disciplines have specific responsibilities in considering scour as a step in the foundation design process.

1. The Structures Engineer determines the preliminary design configuration of a bridge structure utilizing all available geotechnical and hydraulic data and performs lateral stability evaluations for the applicable loadings described in ***SDG*** 2.12 Substructure Limit States, (do not impose arbitrary deflection limits except on movable bridges). A preliminary lateral stability analysis generally will occur during the BDR phase of the project, and a final evaluation will occur subsequent to the selection of the final configurations. The Structures Engineer must apply sound engineering judgment in comparing results obtained from scour computations with available hydrological, hydraulic, and geotechnical data to achieve a reasonable and prudent design.

2. The Hydraulics Engineer, utilizing good engineering judgment as required by ***HEC-23***, provides the worst case scour elevation through a 100-year flood event (100-Year Scour), a 500-year flood event (500-Year Scour), and for "Long-Term Scour." "Long Term Scour" is defined and described in Chapter 4 of the ***FDOT Drainage Manual.***

3. The Geotechnical Engineer provides the nominal axial (compression and tension) capacity curves, mechanical properties of the soil and foundation recommendations based on construction methods, pile availability, similar nearby projects, site access, etc.

B. It is not necessary to consider the scour effects on temporary structures unless otherwise directed by the Department.

3.4 LATERAL LOAD [10.7.3.12][10.8.3.8]

Use a resistance factor of 1.0 for lateral analysis.

3.5 DRIVEN PILES

3.5.1 Prestressed Concrete Piles [5.13.4.4] (Rev. 01/12)

A. For prestressed piling not subjected to significant flexure under service or impact loading, design strand development in accordance with ***LRFD*** [5.11.4] and [5.8.2.3]. Bending that produces cracking in the pile, such as that resulting from ship impact loading, is considered significant. Comply with the tensile stress limits in ***LRFD*** [5.9.4.2.2] for all piling and apply the "severe corrosive conditions" to substructures with an Extremely Aggressive environment classification.

B. A 1-foot embedment is considered a pinned head condition. For the pinned pile head condition the strand development must be in accordance with ***LRFD*** [5.11.4] and [5.8.2.3].

C. For the standard, square, FDOT prestressed concrete piles (12-inch through 30-inch), a pile embedment of 48 inches into a reinforced concrete footing is considered adequate to develop the full bending capacity of the pile. The pile must be solid, (or the pile void filled with structural concrete) for a length of no less than 8 feet (4 feet of embedment length plus 4 feet below the bottom of the pile cap).

D. Grouting a pipe or reinforcing bar cage into the void can strengthen a voided pile. With this detail, the full composite section capacity of the pile and pipe/cage can be developed. The required length of this composite pile section is a function of the loading but must be no less than 8 feet (4 feet below the bottom of the pile cap). To accommodate pile driving practices, specify ***Design Standard*** Index 20631 when 30" square piles with high moment capacity are required by design.

E. Bending capacity versus pile cap embedment length relationship for prestressed piles of widths or diameters larger than 30 inches will require custom designs based upon ***LRFD*** specifications, Department approval, and may require strand development/pile embedment tests.

Commentary: The FDOT Structures Research Center conducted full scale testing of two 30-inch square concrete piles reinforced with prestressing steel and an embedded steel pipe. The piles, which were embedded 4 feet into a reinforced pile cap, developed the calculated theoretical bending strength of the section without strand slip. See ***FDOT Report No 98-9 Testing of Pile-to-Pile Cap Moment Connection***

for 30" Prestressed Concrete Pipe-Pile. *It was concluded that the confinement effects of the pile cap serve to improve the bond characteristics of the strand.*

F. Minimum Sizes.

1. Fender Systems: 14-inch square piling.
2. Bridges: 18-inch square piling.
3. Bridges (Extremely Aggressive Environment due to chlorides): 24-inch square piling.
4. Specify minimum 24 inch piles for "Extremely Aggressive" salt-water sites. Smaller piles may be acceptable with the approval of the District Structures Maintenance Engineer or his designated representative. This decision is dependent upon site-specific conditions and the history of piles in the vicinity. If pile bents will be exposed to wet/dry cycles that could necessitate future jacketing, a minimum 24-inch pile must be used. See ***SDG*** 10.4 for minimum piling for pedestrian bridges. The District Structures Maintenance Engineer may grant exemptions for fishing piers.

3.5.2 Concrete Cylinder Piles

A. Plant produced, post-tensioned segmented cylinder piles (horizontally assembled, stressed and grouted) or pretensioned wet cast cylinder piles are allowed by the Department. Internal redundancy of segmented cylinder piles is provided by the number of strands (maximum of 3 strands per duct.) If cylinder piles are included in the final design at a water location, provide alternate designs utilizing 54-inch and 60-inch cylinder pile sizes. If cylinder piles are used in the final design on a land project and the anticipated lengths are too long for transport by truck, provide alternate designs; one for field assembled, segmented cylinder piles and another for drilled shafts or square precast piles.

B. For concrete cover on cylinder pile reinforcement, see Table 1.4.2-1 Minimum Concrete Cover Requirements.

C. For cylinder piles in water and designed for vessel impact, fill the void with concrete to prevent puncture; see 3.11.I for required plug lengths.

D. For cylinder piles on land and within the clear zone, fill the void with concrete plug to prevent puncture from vehicular impact; see 3.11.J for required plug lengths.

3.5.3 Steel Piles and Wall Anchor Bars

A. Protective Coatings and Corrosion Mitigation Measures

1. Permanent Steel Sheet Piles: Coat permanent sheet piles in accordance with ***Specification*** Section 560. Depict design ground surface or the design scour depth on Wall Control Drawings. Coat weathering steel piles in the same manner as non-weathering steel piles.

2. Wall anchor bars: Use an epoxy-mastic heat shrink wrap or ducting and grouting. At the connection to wall, use a coal tar-epoxy mastic coating.
3. Closed-End Pipe piles with a cast-in-place reinforced concrete core (fully redundant load path) may be used in lieu of other corrosion protection measures in any environment. The cast-in-place reinforced concrete core must resist all design loads without any support from the steel pipe.
4. Pipe and H-Piles with corrosion protection measures as noted in table below: Coat permanent pipe and H-piles in accordance with ***Specification*** Section 560. Depict design ground surface or the design scour depth in plans.

B. Additional Steel Thickness

To account for future corrosion, add an additional sacrificial steel thickness to all permanent steel substructure and wall components as shown in the table below.

Table 3.5.3-1 Table of Additional Sacrificial Steel Thickness Required (inches)

Steel Component	Substructure Environmental Classification			
	Slightly Aggressive	Moderately Aggressive	Extremely Aggressive	
			Case 1[1]	Case2[2]
Pipe and H-Piles completely buried in ground without corrosion protection measures	0.075	0.15	Do not use	0.225
Pipe and H-Piles on land, partially buried in ground with corrosion protection measures	0.09	0.18	Do not use	0.27
Pipe and H-Piles in water, partially buried in ground without corrosion protection measures	0.15	0.3	Do not use	N/A
Pipe and H-Piles in water, partially buried in ground with corrosion protection measures	0.09	0.18	Do not use	N/A
Anchored Sheet Piles	0	0	0	0
Cantilevered Sheet Piles	0.045	0.09	0.135	0.135
Wall Anchor Bars with corrosion protection measures	0.09	0.18	0.27	0.27

1. Case 1: Water > 2000 ppm Chlorides or Resistivity < 1000 Ohm/cm or pH < 6.0; Except for Special Case
2. Case 2: Special Case For Land Applications: Where Ground Water < 2000 ppm Chlorides and Resistivity > 5000 Ohm-cm and 4.9 < pH < 6.0.

Commentary: The following criteria were used to determine the additional steel thickness required:

Environmental Classification versus Corrosion Rate per side for partially buried piles and wall anchor bars:

Slightly Aggressive: 0.001 inches/year
Moderately Aggressive: 0.002 inches/year
Extremely Aggressive: 0.003 inches/year

Environmental Classification versus Corrosion Rate per side for completely buried piles:

Slightly Aggressive: 0.0005 inches/year
Moderately Aggressive: 0.001 inches/year
Extremely Aggressive: 0.0015 inches/year

Design Life:

Pipe and H-Piles without corrosion protection measures:

75 years (additional sacrificial thickness required)

Pipe and H-Piles, Sheet Piles and Wall Anchor Bars with corrosion protection measures:

75 years (coating system 30 years and sacrificial thickness 45 years), (Corrosion rates for anchored sheet pile walls beyond the coating system life are neglected due to structural redundancy).

Application:

Partially buried Pipe Piles and H-Piles: Two Sided Attack at soil and/or water line.
Completely buried Pipe Piles and H-Piles: Two Sided Attack below ground line as shown in table above; single sided attack if Pipe Piles are concrete filled.
Sheet Piles: Single Sided Attack at soil and/or water line.

C. Permanent Sheet Piles

1. Design and detail the sheet pile section sizes and shapes for both cold-rolled and hot-rolled sections where possible. Include the required additional sacrificial steel thickness when establishing the sheet pile section properties shown in the plans. Design the cold-rolled section using flexural section properties that are 120% of the hot-rolled section values. Assure that standard shapes are readily available from domestic suppliers.

2. Detail wall components such as caps and tie-backs to work with both the hot-rolled and cold-rolled sections where possible.

3. Indicate on the plans:
   a. minimum tip elevations (ft).
   b. minimum section modulus (in3/ft).
   c. minimum moment of inertia (in4/ft).

D. Critical Temporary Sheet Piles

1. Indicate on the plans:
   a. minimum tip elevations (ft).
   b. minimum section modulus (in3/ft) for both hot-rolled and cold-rolled sections.
   c. minimum moment of inertia (in4/ft) for both hot-rolled and cold-rolled sections.

2. Design the cold-rolled section using flexural section properties that are at least 120% of the hot-rolled section values.
3. Assure that standard shapes meeting the required properties are readily from domestic suppliers.

Commentary: Tests have shown that cold-rolled sheet pile sections fail in bending at about 85% of their full-section capacity, while hot-rolled sections develop full capacity. There is also some question on the availability of hot-rolled sheet piles; so, by showing the required properties for both types, the Contractor can furnish whichever is available.

The corrosion rate of weathering steel in contact with soil and water is the same as for ordinary carbon steel. The benefits, if any, associated with the use of weathering steel are questionable in partial burial applications like sheet pile walls. Therefore, weathering steel sheet piles are to be coated in the same manner as carbon steel sheet piles in accordance with ***Specification*** *Section 560.*

Anchored steel sheet pile walls should be considered for use in extremely aggressive environments due to the additional sacrificial steel thickness required for steel sheet piles used in cantilevered walls.

3.5.4 Minimum Pile Spacing and Clearances [10.7.1.2]

Delete the first sentence of ***LRFD*** [10.7.1.2] and substitute the following:
"Center-to-center pile spacing at and below the design ground elevation shall be not less than 3.0 pile diameters. For 10 inch diameter or smaller micropiles, the spacing shall be not less than 30 inches."

3.5.5 Downdrag [10.7.1.6.2]

A. Show the downdrag load on the plans.

B. For pile foundations, downdrag is the ultimate skin friction above the neutral point (the loading added to the pile due to settlement of the surrounding soils) plus the dynamic resistance above the neutral point (the resistance that must be overcome during the driving of the pile) minus the live load. The dynamic resistance typically equals 0.50 to 1.0 times the ultimate skin friction.

C. Do not discount scourable soil layers to reduce the predicted downdrag.

Commentary: Scour may or may not occur as predicted, therefore the presence of scourable soil layers must be accounted for.

3.5.6 Resistance Factors [10.5.5]

Delete ***LRFD*** Table 10.5.5-2 and substitute ***SDG*** Table 3.5.6-1 for piles.

Table 3.5.6-1 Resistance Factors for Piles (all structures)

Pile Type	Loading	Design Method	Construction QC Method	Resistance Factor, φ
Driven Piles with 100% Dynamic Testing	Compression	Davisson Capacity	EDC or PDA & CAPWAP	0.75
			EDC or PDA & CAPWAP & Static Load Testing	0.85
			EDC or PDA & CAPWAP & Statnamic Load Testing	0.80
	Uplift	Skin Friction	EDC or PDA & CAPWAP	0.60
			EDC or PDA & CAPWAP & Static Uplift Testing	0.65
Driven Piles with ≥10% Dynamic Testing	Compression	Davisson Capacity	Driving criteria based on EDC or PDA & CAPWAP	0.65
			Driving criteria based on EDC or PDA & CAPWAP & Static Load Testing	0.75
			Driving criteria based on EDC or PDA & CAPWAP & Statnamic Load Testing	0.70
	Uplift	Skin Friction	Driving criteria based on EDC or PDA & CAPWAP	0.55
			Driving criteria based on EDC or PDA & CAPWAP & Static Load Testing	0.60
All piles	Lateral (Extreme Event)	FBPier[1]	Standard Specifications	1.00
			Lateral Load Test[2]	1.00

1. Or comparable lateral analysis program.
2. When uncertain soil conditions are encountered.

Commentary: The increased confidence in achieving the required nominal resistance when dynamic measurements are used to determine pile bearing of all piles is reflected in the use of an increased resistance factor.

EDC systems have not been developed for use with steel pipe piles or steel H-piles. EDC systems are not currently required for concrete cylinder piles because EDC systems have not been tested in cylinder piles. EDC systems are installed in solid and voided square prestressed concrete piles as shown in Design Standard Index 20602.

3.5.7 Battered Piles [10.7.1.4]

A. Plumb piles are preferred; however, if the design requires battered piles, a single batter, either parallel or perpendicular to the centerline of the cap or footing, is preferred.

B. If the design requires a compound batter, orient the pile so that the direction of batter will be perpendicular to the face of the pile.

C. With input from the Geotechnical Engineer, the Structures Engineer must evaluate the effects of length and batter on the selected pile size. Do not exceed the following maximum batters, measured as the horizontal-to-vertical ratio, h:v:

1. End bents and abutments: 1:6
2. Piers without Ship Impact: 1:12
3. Intermediate bents: 1:6
4. Piers with Ship Impact: 1:4

Commentary: When driven on a batter, the tips of long, slender piles tend to deflect downward due to gravity. This creates undesirable flexure stresses and may lead to pile failure, especially when driving through deep water and in very soft/loose soil. Hard subsoil layers can also deflect piles outward in the direction of batter resulting in pile breakage due to flexure. The feasibility of battered piles must be determined during the design phase.

3.5.8 Minimum Tip Elevation [10.7.6]

A. The minimum pile tip elevation must be the deepest of the minimum elevations that satisfy uplift and lateral stability requirements for the three limit states. The minimum tip for lateral stability requirements must be established by the Structures Engineer with the concurrence of the Geotechnical Engineer. The minimum tip elevation may be set lower by the Geotechnical Engineer to ensure soft soil strata are penetrated to satisfy post construction settlement concerns.

B. Use the following procedure to establish the Minimum Tip Elevation for lateral stability requirements for each design ground surface (or design scour) elevation:

1. Establish a high end bearing resistance such that the pile tip will not settle due to axial forces;
2. Apply the controlling lateral load cases, raising the pile tips until the foundation becomes unstable;
3. Add 5 feet or 20% of the penetration, whichever is less, to the penetration at which the foundation becomes unstable.

Commentary: The assumed soil/pile skin friction resistance is not modified using this procedure. It is assumed that the difference in axial capacity predicted during this portion of the design phase versus what is established during construction is due to end bearing only.

Axial compressive resistance is assured by the bearing requirements in the Specifications.

3.5.9 Anticipated Pile Lengths [10.7.3.3]

A. Test Pile Projects - Anticipated pile lengths are used only to estimate quantities and set test pile lengths. These lengths are determined by using the lower of the minimum tip elevations specified on the plans or the axial capacity elevations predicted by the pile capacity curves (SPT 97 Davisson Capacity Curves.) Pile order lengths will be determined during construction based on the results of the Test Piles.

B. Predetermined Pile Length Projects - The geotechnical engineer reviews the anticipated pile lengths and the core borings to determine a pile length which will provide sufficient capacity with a high degree of certainty. This length will normally be longer than the anticipated pile length.

C. Base the decision to provide predetermined pile lengths or to use test piles on overall project economy.

3.5.10 Test Piles [10.7.9] (Rev. 01/12)

A. Test piles include both static and dynamic load test piles, which are driven to determine soil capacity, pile-driving system, pile drivability, production pile lengths, and driving criteria.

B. Test Piles are required to determine the authorized pile lengths during construction when the geotechnical investigation does not provide enough information to predetermine pile lengths with a high degree of reliability. The decision to use test piles should be based on overall project economy.

C. If Test Piles are omitted, Production Piles with Dynamic Load Tests and Embedded Data Collectors (EDCs) are required for all projects unless, in the opinion of the District Geotechnical Engineer, pile-driving records for the existing structure include enough information (i.e., stroke length, hammer type, cushion type, etc.) to adequately determine the driving criteria.

D. When test piles are specified in the plans, at least one test pile must be located approximately every 200 feet of bridge length with a minimum of two test piles per bridge structure. These requirements apply for each size and pile type in the bridge except at end bents. For bascule piers and high-level crossings that require large footings or cofferdam-type foundations, specify at least one test pile at each pier. Consider maintenance of traffic requirements, required sequence of construction, geological conditions, and pile spacing when determining the location of test piles. For phased construction, test piles shall be located in the first phase of construction. The Geotechnical Engineer must verify the suitability of the test pile locations.

E. When test piles are specified in the plans, test piles should be at least 15 feet longer than the estimated length of production piles. Additional length may be required by the load frame geometry when static load tests are used. The Structural Engineer must coordinate his recommended test pile lengths and locations with the District Geotechnical Engineer and Geotechnical Consultant, before finalization of the plans.

F. For projects with letting dates prior to July 1, 2011 - Specify one Embedded Data Collector (EDC) per test pile on all projects with bridges containing 18-inch, 20-inch, 24-inch or 30-inch prestressed concrete test piles. Include Pay Item No. 455-146 (Embedded Data Collector, each) on the Summary of Pay Items. Coordinate with the District Specifications Office to ensure that special provision SP4550512 is included in the specifications package.

For projects with letting dates after July 1, 2011, the use of EDC in test piles is optional, the EDC Pay Item is not valid and specification requirements are in the July 2011 Workbook.

*Commentary: Test piles are exploratory in nature and may be driven harder, deeper, and to a greater bearing value than required for permanent piling or may be used to establish soil freeze parameters. (See **Specification** Section 455). The Structures Engineer must consider these facts when establishing test pile lengths.*

3.5.11 Load Tests [10.7.3.8][10.8.3.5.6]

A. Load test options include static load tests, dynamic load tests, Osterberg load tests, and Statnamic load tests. Both design phase and construction phase load testing should be investigated. When evaluating the benefits and costs of load tests, consider soil stratigraphy, design loads, foundation type and number, type of loading, testing equipment, and mobilization.

Commentary: In general, the more variable the subsurface profile, the less cost-effective static load tests are. When soil variability is an issue, other options include additional field exploration, more laboratory samples, in-situ testing, and pullout tests.

B. Static Load Test [10.7.3.8]: When static load tests are required, show on the plans: the number of required tests, the pile or shaft type and size, and test loads. Piles must be dynamically load tested before static load testing. Static load tests should test the pile or drilled shaft to failure as required in Section 455 of the ***Specifications***. The maximum loading of the static load test must exceed the nominal capacity of the pile or twice the factored design load, whichever is greater.

Commentary: Test piles or drilled shafts can be subjected to static compression, tension, or lateral test loads. Static load tests may be desirable when foundation investigations reveal sites where the soils cause concern regarding the development of the required pile capacity at the desired depths, and/or the possibility that considerable cost savings will result if higher soil capacities can be obtained. Furthermore, static load tests will reduce the driving effort since a higher Performance Factor is applied to the Ultimate Bearing Capacity formula.

C. Dynamic Load Test [10.7.3.8.3]: All test piles must have dynamic load tests. Indicate this requirement with a note on the foundation layout sheet.

Commentary: Dynamic load testing of piles employs strain transducers and accelerometers to measure pile force and acceleration during driving operations. A Pile Driving Analyzer (PDA) unit (or similar) is used for this purpose.

D. Statnamic Load Test: When Statnamic load tests are required, show on the plans: the number of required tests, the size and type of pile or shaft, and test loads. Piles must be dynamically load tested before Statnamic load testing. Equivalent static load tests derived from Statnamic load tests shall test the pile or drilled shaft to failure in accordance with Section 455 of the ***Specifications***. The maximum derived static loading must exceed the nominal capacity of the pile or twice the factored design load, whichever is greater.

E. Special Considerations: Load testing of foundations that will be subjected to subsequent scour activity requires special attention. The necessity of isolating the resistance of the scourable material from the load test results must be considered.

3.5.12 Pile Driving Resistance [10.7.3.8.6] (Rev. 01/12)

A. The Geotechnical Engineer calculates the required nominal bearing resistance (R_n) as:

$$\text{(Factored Design Load + Net Scour + Downdrag)} / \varphi < R_n \quad \text{[Eq. 3-1]}$$

Where: φ is the resistance factor taken from Table 3.5.6-1.

B. Typically, R_n will be the required driving resistance. Nominal bearing resistance values given in the Pile Data Table must not exceed the following values unless specific justification is provided and accepted by the Department's District Geotechnical Engineer for Category 1 structures or the State Geotechnical Engineer for Category 2 structures:

Table 3.5.12-1 Maximum Pile Driving Resistance

Pile Size	Resistance (tons)
14 inch[1]	200
18 inch	300
20 inch	360
24 inch	450
30 inch	600
54 inch concrete cylinder	1550
60 inch concrete cylinder	2000

1. 14 inch square piles can only be used in pedestrian bridge applications.

C. When the minimum tip requirements govern over bearing requirements, construction methods may need to be modified so that pile-driving resistance never exceeds the values given above. Construction methods such as preforming or jetting may be required at these locations. See the Pile Data Table in the ***SDM*** and ***Instructions for Design Standards (IDS)***.

D. The values listed above are based on upper bound driving resistance of typical driving equipment. The maximum pile driving resistance values listed above should not be considered default values for design. These values may not be achievable in certain areas of Florida based on subsoil conditions. Local experience may dictate designs utilizing substantially reduced nominal bearing resistance. Contact the District Geotechnical Engineer for guidance in the project area.

E. Design all piles within the same pier or bent to have the same required driving resistance, except piles in wingwalls of end bents may be designed to a lower driving resistance.

3.5.13 Pile Jetting and Preforming

A. When jetting or preforming is allowed, the depth of jetting or preforming must comply with all the design criteria. For projects with scour, jetting or preforming will not normally be permitted below the 100-year scour elevation EL_{100}. If jetting or preforming elevations are deeper than EL_{100}, the lateral confinement around the pile must be restored to EL_{100}. If jetting or preforming is utilized, the Net Scour Resistance to that depth is assumed to be equal to 0.0 kips (provided the hole remains open or continuous jetting is being done).

B. Verify that jetting will not violate environmental permits before specifying it in the contract documents.

3.5.14 Pile Data Table

A. For projects with test piles include in the plans a Pile Data Table and notes as shown in the ***Instructions for Design Standards (IDS)***, Index 20600.

B. For projects without test piles include in the plans a modified Pile Data Table and notes as shown in the ***Instructions for Design Standards (IDS)***, Index 20600.

C. For items that do not apply, place "N/A" in the column but do not revise or modify the table.

D. Round loads up to the nearest ton. Round minimum tip elevations down and pile lengths up to the nearest foot. Round cut-off elevations to the nearest tenth-of-a foot.

E. The Pile Data Table is not required in the Geotechnical Report; however, the Geotechnical Engineer of Record must review the information shown on the plans for these tables.

F. Use Equation 3-1 to determine the required Nominal Bearing Resistance value (R_n) for the Pile Data Table.

3.5.15 Plan Notes

Additional Plan Notes:

1. Minimum Tip Elevation is required _____ (reason must be completed by designer, for example: "for lateral stability", "to minimize post-construction settlements" or "for required tension capacity").
2. When a required jetting or preformed elevation is not shown on the table, do not jet or preform pile locations without prior written approval of the District Geotechnical Engineer. Do not advance jets or preformed pile holes deeper than the jetting or preformed elevations shown on the table without the prior approval of the District Geotechnical Engineer. If actual jetting or preforming elevations differ from those shown on the table, the District Geotechnical Engineer will determine the required driving resistance.

3.5.16 Fender Piles

See ***SDG*** 3.14 Fender Systems

3.5.17 Concrete Piling Spliced with Steel Devices

Concrete piling spliced with steel devices (e.g. welded connection or locking devices) shall only be used where the splices will be at least 4 feet below the lower of the design ground surface or the design scour depth.

3.6 DRILLED SHAFT FOUNDATIONS

3.6.1 Minimum Sizes (Rev. 01/12)

The minimum diameter size for drilled shaft bridge foundations is 42 inches except that nonredundant shafts as defined in ***SDG*** 3.6.9 must be no less than 48 inches in diameter. Shafts for bridge widening or under miscellaneous structures (i.e. sign structures, mast arms, high-mast light poles, noise walls) are exempt from this requirement.

Commentary: The minimum drilled shaft diameter for bridges with redundant foundations was increased from 36" to 42" to alleviate construction difficulties observed on several projects. Rebar cages for 42" shafts have less flexibility issues during installation, pose less congestion and consolidation issues during concreting and permit more tremie options than cages for 36" shafts.

3.6.2 Downdrag (Rev. 01/12)

A. Show the downdrag load on the plans.

B. For drilled shaft foundations, "downdrag" is the ultimate skin friction above the neutral point (the loading added to the drilled shaft due to settlement of the surrounding soils) minus the live load.

C. Do not discount scourable soil layers to reduce the predicted downdrag.

Commentary: Scour may or may not occur as predicted, therefore the presence of scourable soil layers must be accounted for.

3.6.3 Resistance Factors [10.5.5] (Rev. 01/12)

Delete ***LRFD*** Table 10.5.5-3 and substitute ***SDG*** Table 3.6.3-1 for drilled shafts.

Table 3.6.3-1 Resistance Factors for Drilled Shafts (Bridge Foundations)

Loading	Design Method	Construction QC Method	Resistance Factor, φ	
			Redundant	Non-redundant[1]
Compression	For soil: FHWA alpha or beta method [2]	Specifications	0.6	0.5
	For rock socket: McVay's method [3] neglecting end bearing	Specifications	0.6	0.5
	For rock socket: McVay's method [3] including 1/3 end bearing	Specifications	0.55	0.45
	For rock socket: McVay's method [3]	Statnamic Load Testing	0.7	0.6
	For rock socket: McVay's method [3]	Static Load Testing	0.75	0.65
Uplift	For clay: FHWA alpha method [2]	Specifications	0.35	0.25
	For sand: FHWA beta method [2]	Specifications	0.45	0.35
	For rock socket: McVay's method [3]	Specifications	0.5	0.4
Lateral [4]	FBPier [5]	Specifications Or Lateral Load Test [6]	1.00	0.9

1. As defined in ***SDG*** 3.6.9.
2. Refer to FHWA-IF-99-025, soils with N<15 correction suggested by O'Neill.
3. Refer to ***FDOT Soils and Foundation Handbook***.
4. Extreme event.
5. Or comparable lateral analysis program.
6. When uncertain conditions are encountered.

*Commentary: **LRFD** resistance factors are based on the probability of failure (P_f) of an element or group of elements resisting structural loads. When resistance factors were calibrated, the state of practice utilized redundant drilled shaft foundations, therefore,*

the design P_f for each drilled shaft is larger than the design P_f for the entire bent or pier because multiple drilled shafts would have to fail before the bent or pier could fail. In a nonredundant foundation, the P_f for each foundation element shall be the design P_f for the entire bent or pier because of the consequence of failure. Therefore, the resistance factor for nonredundant foundation element shall be smaller than that of the redundant foundation units. Until resistance factors are properly calibrated for nonredundant foundations, reduce the values provided in Table 3.6.3-1 of the FDOT ***Structures Design Guidelines*** *by 0.10. In addition, the design engineer should also evaluate the number of load tests required in order to qualify using the resistance factor for load test; fewer load tests may be adequate for a fairly uniform subsurface project site but multiple load tests may be necessary at a site with variable subsoil conditions. Sometimes load test may be required at each different soil profile if a representative soil profile of the site cannot be obtained.*

3.6.4 Minimum Tip Elevation [10.8.1.5]

A. The minimum drilled shaft tip elevation must be the deepest of the minimum elevations that satisfy all axial capacity and lateral stability requirements for the three limit states. The minimum tip for lateral stability requirements must be established by the Structures Engineer with the concurrence of the Geotechnical Engineer. The minimum tip elevation may be set lower by the Geotechnical Engineer to ensure axial compressive and tensile requirements are satisfied and to ensure soft soil strata are penetrated to satisfy post construction settlement concerns.

B. Use the following procedure to establish the Minimum Tip Elevation for lateral stability requirements for each design ground surface (or design scour) elevation:

   1. Establish a high end bearing resistance such that the shaft tip will not settle due to axial forces;
   2. Apply the controlling lateral load cases, raising the shaft tips until the foundation becomes unstable;
   3. Add 5 feet or 20% of the penetration, whichever is less, to the penetration at which the foundation becomes unstable.

Commentary: The assumed soil/shaft side resistance is not modified using this procedure. It is assumed that the difference in axial resistance predicted during this portion of the design phase versus what is established during construction is due to end bearing only.

3.6.5 Load Tests

See ***SDG*** 3.5.10

3.6.6 Drilled Shaft Data Table (Rev. 01/12)

A. For projects with drilled shafts, include in the plans, a Drilled Shaft Data Table. See ***SDM*** Chapter 11.

B. For items that do not apply, place "N/A" in the column but do not revise or modify the table.

C. Round loads up to the next ton. Round elevations down to the nearest foot.

D. The "Drill Shaft Data Table" is not required in the Geotechnical Report; however, the Geotechnical Engineer of Record must review the information shown on the plans for these tables.

E. The Min. Top of Rock Elevation is the highest elevation determined by the Geotechnical Engineer where the material qualities meet or exceed those which are suitable to be included in the rock socket.

   1. In somewhat variable conditions where pilot holes will be required, the Geotechnical Engineer should provide a best estimate of the elevation.

   2. In highly variable conditions where pilot holes will be required, use an asterisk " * " in place of the elevation, and refer to ***SDG*** 3.6.7.C.

F. The Geotechnical Engineer calculated the required nominal bearing resistance (R_n) as: (Factored Design Load + Downdrag) / Ø < R_n

G. The Geotechnical Engineer calculated the required nominal uplift resistance ($R_{n\text{-uplift}}$) as: (Factored Design Load -Factored Effective Shaft Weight) / Ø < $R_{n\text{-uplift}}$

3.6.7 Plan Notes

A. Additional Plan Notes below the Drilled Shaft Data Table:

   1. The Tip Elevation is the highest elevation the shaft tip should be constructed unless load test data, rock core tests, or other geotechnical test data obtained during pilot holes allows the Engineer to authorize a different Tip Elevation.

   2. The Min. Tip Elevation is required for lateral stability.

   3. Rock encountered above the Min. Top of Rock Elevation is considered unsuitable for inclusion in the rock socket length. The Engineer may revise this elevation based on pilot holes, if performed.

   4. Inspect all shafts considered nonredundant using the SID or an approved alternate down-hole camera to verify shaft bottom cleanliness at the time of concreting. Test all nonredundant drilled shafts using cross-hole-sonic logging (CSL).

B. For Drilled Shaft projects with lateral load tests, add the following to Note 2 above:

   The Engineer may revise this elevation based on pilot holes or lateral load tests, if performed.

C. For Drilled Shaft projects in highly variable soil conditions with pilot holes required, refer to ***SDG*** 3.6.6.E and replace Note 3 above with:

The District Geotechnical Engineer will provide the Min. Top of Rock Elevation based on the required pilot holes.

D. For Drilled Shafts with pressure-grouted tips, add the following note:

NOTE: A.H. Beck Foundation Company, Inc. owns U.S. Patent No. 6,371,698 entitled "Post-Stressed Pier." You are advised that the Department has, in any case, obtained a patent license agreement with A.H. Beck Foundation Company, Inc. that provides royalty free use of U.S. Patent No. 6,371,698 in the design, manufacture and construction of the post-grouted drilled shafts on this Department project, and no royalties will be asserted by A.H. Beck Foundation Company, Inc. against the Department, the prime contractor, subcontractors, manufacturers, or suppliers as to the post-grouted drilled shafts for this project. For more information as to U.S. Patent No. 6,371,698, contact:

A.H. Beck Foundation, Inc.
5123 Blanco Road
San Antonio, Texas 78216
Phone (210) 342-5261

3.6.8 Construction Joints

For drilled shafts used in bents located in water containing more than 2,000 ppm chloride (See ***SDG*** 1.3.3), detail the shaft to extend without a construction joint a minimum of 12 feet above the Mean High Water elevation or bottom of the bent cap, whichever is lower.

Commentary: It is preferred that taller shafts extend to the bottom of the bent cap without a construction joint.

3.6.9 Nonredundant Drilled Shaft Foundations (Rev. 01/12)

A. Refer to the ***Soils and Foundations Handbook*** for special design phase investigation and construction phase testing and inspection requirements for nonredundant drilled shafts.

B. Nonredundant drilled shaft bridge foundations consist of:

1. Bents with three or fewer drilled shafts,
2. Single column piers with three or fewer drilled shafts,
3. Two column piers with one or both of the columns supported by one or two drilled shafts,
4. Those shafts deemed nonredundant per ***LRFD*** [1.3.4].

C. Shafts for bridge widening when the substructure is attached to the original structure, and shafts up to 60 inches in diameter installed to support miscellaneous structures (i.e. sign structures, mast arms, high-mast light poles, noise walls) are exempt from these requirements.

D. Add a note to Foundation Layout Sheet requiring additional pilot holes at nonredundant shaft locations when the original design phase borings are insufficient. See ***Soils and Foundations Handbook*** for requirements. Require the pilot holes to be performed two weeks prior to shaft excavation. Direct additional pilot holes during construction, where shafts are lengthened or shaft locations are modified.

E. For all nonredundant drilled shafts, add Note 4 as shown in ***SDG*** 3.6.7, paragraph A to ensure shaft cleanliness at the time of concrete placement and integrity of the completed shaft.

3.6.10 Minimum Reinforcement Spacing [5.13.4.5.2, 10.8.3.9.3]

A. For drilled shafts, provide a minimum clear distance between reinforcement of six inches to allow for proper concrete consolidation.

B. Double-cage shafts will not be permitted unless approved by the State Geotechnical Engineer. Inner column cages that develop column reinforcing steel at the top of the drilled shaft are exempted from this requirement.

Commentary: Multiple reinforcing cages in drilled shafts create constructability problems and are highly discouraged. A minimum 12-inch spacing between cages will be required when double cages are proposed for consideration in lieu of a larger diameter shaft.

3.7 COFFERDAMS AND SEALS

A. When showing seal dimensions in the plans, show the maximum water elevation assumed for the seal design. Design the seal concrete thickness using the exceeding pressure obtained from flow net analysis performed by the Geotechnical Engineer. In the absence of a flow net analysis, use the maximum differential water head.

B. For design of the cofferdam seal, use a Load Factor of 1.0 and assume the maximum service load stresses from Table 3.7-1, which apply at the time of complete dewatering of the cofferdam.

C. In the event greater stress values are required, employ mechanical connectors such as weldments or shear connectors for the contact surfaces of the foundation and seal. When connectors are used to increase shear capacity, detail the connections and note the locations on the drawings. Provide substantiating calculations.

Table 3.7-1 Cofferdam Design Values

Maximum service load stresses at time of complete dewatering of the cofferdam	
Maximum tension in seal concrete from hydrostatic pressure	250 psi*
Adhesive shear stress between seal concrete and concrete piles or shafts	75 psi*
Adhesive shear stress between seal concrete and steel piles or casings	36 psi*
*Values have been adjusted for appropriate Resistance Factors.	

Commentary: Generally, cofferdams are designed and detailed by the Contractor and reviewed by the EOR as a shop drawing. In many instances, however, the EOR must design the seal because it constitutes a significant load for the foundation design, and a seal quantity is often required for bidding purposes.

3.8 SPREAD FOOTINGS [10.5.5][10.5.6]

A. The Geotechnical Report will provide the maximum soil pressures, the minimum footing widths, the minimum footing embedment, and the ***LRFD*** Table 10.5.5.2.2-1 Resistance Factors (φ).

B. Determine the factored design load and proportion the footings to provide the most cost effective design without exceeding the recommended maximum soil pressures. Communicate with the Geotechnical Engineer to ensure that the corresponding settlements do not exceed the tolerable limits.

C. Require dewatering with a note on the plans when it is recommended in the Foundation Report. Dewatering is required if the seasonal high ground water elevation is higher than 24-inches below the bottom of the footing.

D. Verify sliding, overturning, and rotational stability of the footings.

3.9 MASS CONCRETE (Rev. 01/12)

See ***SDG*** 1.4.4 for Mass Concrete requirements.

3.10 CRACK CONTROL (Rev. 01/12)

A. Limit service tension stresses in the outer layer of longitudinal reinforcing steel for all mildly reinforced pier columns, pier caps and bent caps under construction loading and Service III Loading to 24 ksi for Grade 60 reinforcing. The service biaxial bending tension stresses in longitudinal column reinforcing may be approximated by taking the square root of the sum of the squares in each direction.

Commentary: The tensile limit 24 ksi for mild reinforcing, combined with proper distribution of reinforcement, is intended to ensure the durability of pier columns, pier caps and bent caps by limiting crack widths.

B. Long Walls and other similar construction:

1. Limit the length of a section to a maximum of 30 feet between vertical construction joints. See the limits of concrete pours in tall piers (***SDG*** 3.11).
2. Clearly detail required construction joints on the plans.
3. Specify construction or expansion joints fitted with a water barrier when necessary to prevent water leakage.

C. Footings: Specify that footings be cast monolithically. Attach struts and other large attachments as secondary castings.

D. Keyways: Do not place keyways in horizontal construction joints except that a keyway will be used at the junction of a cast-in-place concrete wall and footing. Provide keyways at formed surfaces of vertical construction joints and elsewhere as necessary to transfer applied loads from one cast section to an adjacent, second pour. Specify or detail trapezoidal keyways for ease of forming and stripping. For example, a typical joint must have a keyway about 2-inches deep and about 6-inches wide (or one third the thickness of the member for members less than 18-inches in thickness) running the full length.

E. In ***LRFD*** [5.7.3.4], use a Class 2 exposure condition for those portions of box culverts described in ***SDG*** 3.15.8. Use Class 1 exposure condition for all location/components not requiring a Class 2 exposure condition. Any concrete cover thickness greater than the minimum required by Table 1.4.2-1 may be neglected when calculating $\mathbf{d_c}$ and **h**, if a Class 2 exposure condition is used.

3.11 PIER, COLUMN, AND FOOTING DESIGN (Rev. 01/12)

A. For tall piers or columns, detail construction joints to limit concrete lifts to 25 feet. When approved by the Department, a maximum lift of 30 feet may be allowed to avoid successive small lifts (less than approximately 16 feet) which could result in vertical bar splice conflicts or unnecessary splice length penalties.

B. Detail splices for vertical reinforcing at every horizontal construction joint; except that the splice requirement may be disregarded for any lift of 10 feet or less.

C. Coordinate the lift heights and construction joint locations with the concrete placement requirements of the specifications.

D. On structures over water, vertical post-tensioning strand (except in cylinder piles) cannot extend below an elevation that is 12 feet above Mean High Water Level (MHW) or Normal High Water Level (NHW), regardless of the Environmental Classification. Post-tensioning bars are excluded from this restriction.

E. Precast pier sections with spliced sleeve connections for mild reinforcing are allowed.

F. The minimum wall thickness for segmental piers is 10-inches if external post-tensioning is used and 12-inches if internal post-tensioning is used.

G. Post-tensioning applied to piers must be located within a voided or hollow cross section and not external to the pier. Where tendons extend from the underside of pier caps into hollow sections, provide a one half-inch by one half-inch drip recess around the tendon duct.

H. Size footings such that the effective depth of concrete is sufficient to resist shear without the requirement for shear reinforcement per ***LRFD*** [5.13.3.6].

I. For bridges designed for vessel collision, design pier columns to be solid concrete from 15 feet above MHW or NHW to 2 feet below Mean Low Water Level (MLW) or Normal Low Water Level (NLW). Voided sections that are filled after the column is constructed may be used.

Commentary: The above requirement is sufficient for barge collision. Ship collision will be taken on a case-by-case basis. Coordinate with the State Structures Design Office.

J. For all land projects, voided substructure piers and columns located within the clear zone, regardless of the presence of guardrail or barriers, must be filled with concrete to 15 feet above the finished grade. For voided piers, the fill section may be accommodated with a secondary pour. Show mass concrete fill section to be cast against two layers of roofing paper.

K. For water crossings:

1. Locate the bottom of all footings, excluding seals, a minimum of 1 foot below MLW or NLW. Consider lowering the footing further when the tides will consistently expose piles for extended periods.
2. Locate the top of waterline footings a minimum of 1 foot above MHW or NHW.
3. For submerged footings, consider the type of boating traffic and waterway use when determining the clearance between MLW or NLW and the top of footing.
4. In navigation channels coordinate all footing elevations with the Coast Guard as required.

L. All voided substructures must be sealed from possible sources of leaks and contain free-exiting drains or weep-holes to drain away water that may collect from any source including condensation.

M. Drains in voided piers may be formed using 2-inch diameter permanent plastic pipes set flush with the top of the bottom slab or solid section. Slope interior top of solid base toward drains or weep-holes. Provide weep-holes with vermin guards. Show in the Contract Drawings, locations and details for drains taking into account bridge grade and cross-slope.

N. Provide inspection access for all hollow piers. See Other Box Sections in ***SDG*** 4.6.

O. For additional post-tensioning requirements see ***SDG*** 4.5.

Table 3.11-1 Required tendons for post-tensioned substructure elements

Post-Tensioned Bridge Element	Minimum Number of Elements
Hammerhead Pier Cap	6
Straddle Beam Cap	
Framed Straddle Pier Column	
C-Pier Column	
C-Pier Cap	
All other Pier Types and Components Not Listed	
C-Pier Footing	8
Hollow Cast Pier Column	

Table 3.11-2 Minimum Center-to-Center Duct Spacing

Substructure Element	Minimum Center-to-Center Duct Spacing
Hammerhead Pier Cap	Vertical Spacing: 4-inches, outer duct diameter plus 1.5 times maximum aggregate size, or outer duct diameter plus 2-inches whichever is greater. [1]Horizontal Spacing: Outer Duct diameter plus 3-inches.
Straddle Beam Cap	
C-Pier Cap	
Pile/Drilled Shaft Cap	
Solid Vertical Column	Outer duct diameter plus 3-inches
Hollow Cast Pier Column	

1. Usually ducts are placed in-line with P.T. anchors. P.T. anchor spacing is typically controlled by the size of the spirals and anchor plates.

P. A minimum height of 4" is required for all pedestals not poured monolithically. Pedestals shall be no more than 15" tall. If taller pedestals are required, use transversely sloping caps to minimize pedestal heights. See ***SDM*** Chapter 12.

Q. For precast struts set into, cast into or placed against cast-in-place concrete within the splash zone, maintain concrete cover over the entire interfacing surfaces of both the precast strut and the cast-in-place concrete. Connect precast struts to cast-in-place concrete using only stainless steel or non-metallic reinforcement.

Commentary: Experience has shown that CIP concrete pulls away from a precast strut at their interface allowing water and/or chlorides to enter and initiate corrosion.

R. Connect stay-in-place precast "bathtub" forms to cast-in-place footings using stainless steel or non-metallic reinforcement, or provide a mechanical connection across the interface between the form and the footing, e.g. shear keys.

3.12 RETAINING WALL TYPES (Rev. 01/12)

A. Using site-specific geotechnical information, the EOR, in cooperation with the geotechnical engineer, will determine all wall system requirements. Consider site, economics, aesthetics, maintenance and constructability when determining the appropriate wall type. See Figure 3.12-2 to determine appropriate FDOT Wall Type.

B. Partial height walls such as perched and toe-walls are not desirable due to maintenance issues related to mowing and maintaining adjacent fill slopes. Also, generally, full height walls better facilitate future widenings. See Figure 3.12-1.

Figure 3.12-1 Retaining Wall Types

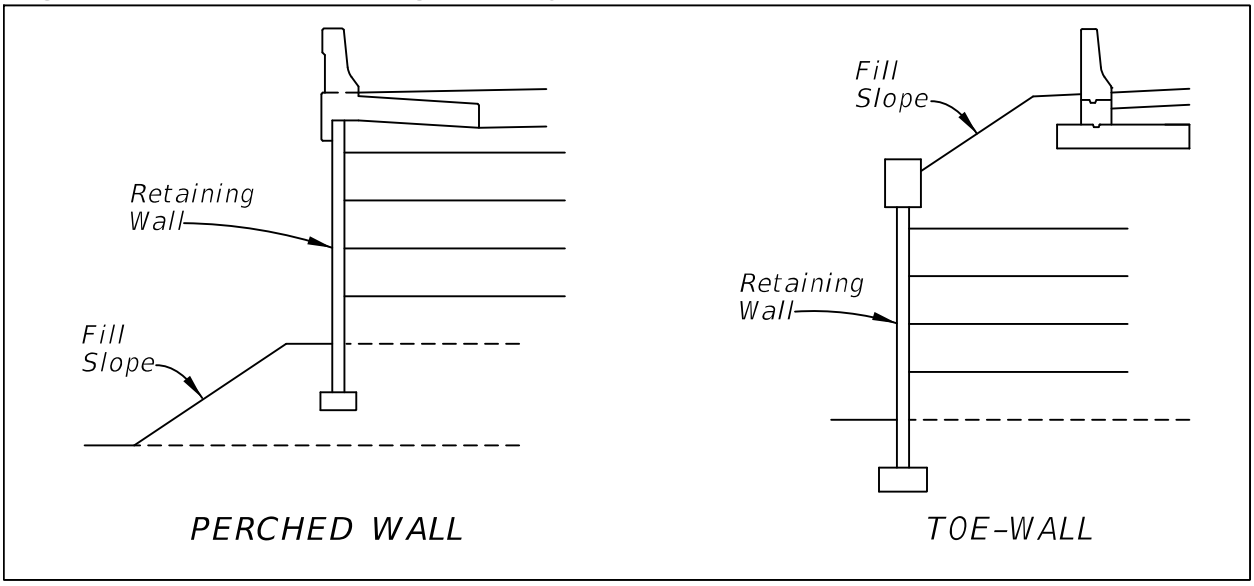

C. See Figure 3.12-2 and Table 3.12-1 for additional wall selection guidance.

Figure 3.12-2 Permanent Retaining Wall Selection Process Flowchart

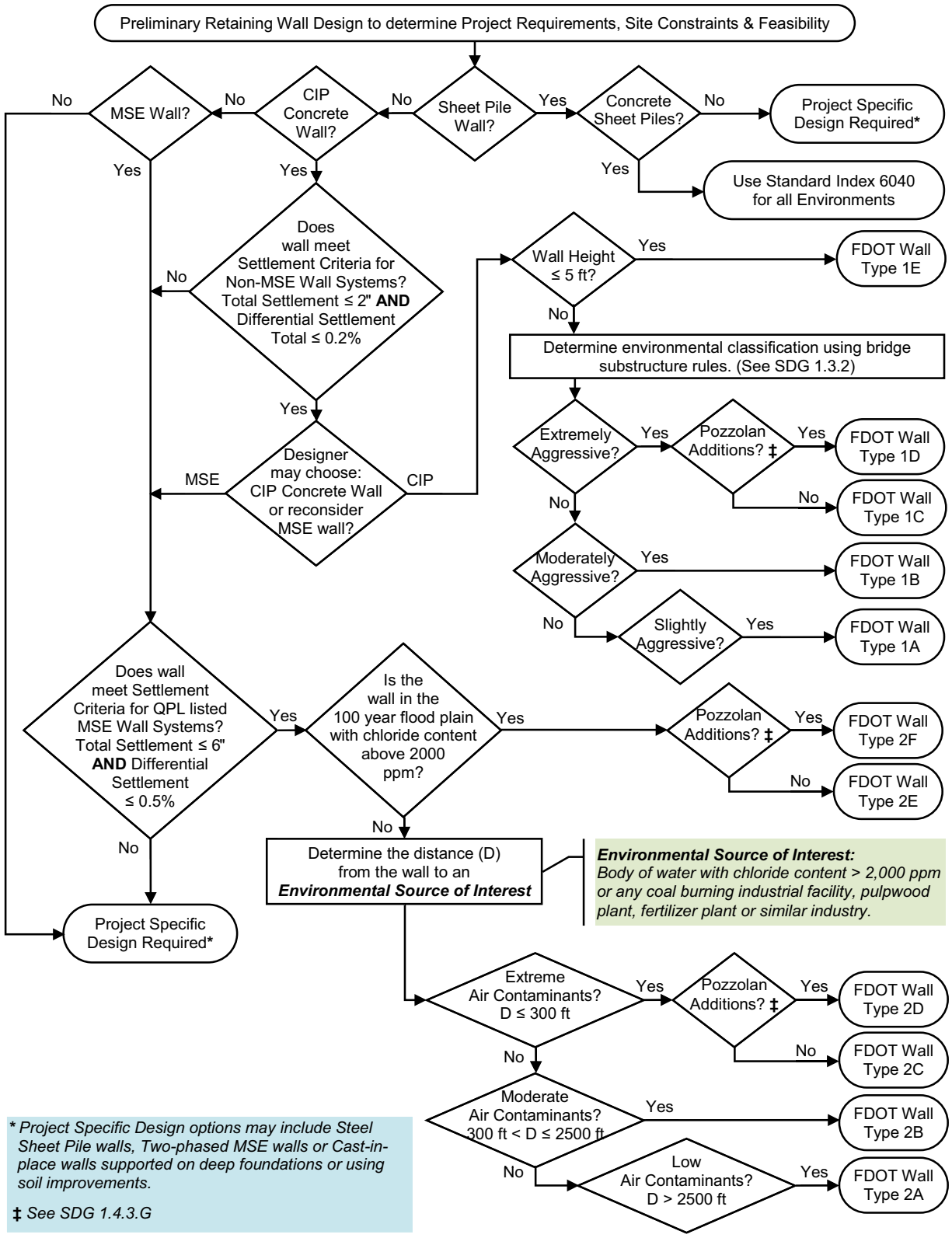

* *Project Specific Design options may include Steel Sheet Pile walls, Two-phased MSE walls or Cast-in-place walls supported on deep foundations or using soil improvements.*

‡ *See SDG 1.4.3.G*

Table 3.12-1 Design Standards Relation to FDOT Wall Types

Wall Systems within FDOT Design Standards	FDOT Wall Types from Wall System Selection Process											
	T.S. ≤ 2" AND D.S. ≤ 0.2%					T.S. ≤ 6" AND D.S. ≤ 0.5%						D.S.≤ 2.0%[1]
	1A	1B	1C	1D	1E	2A	2B	2C	2D	2E	2F	3
Index 6010 CIP Cantilever Retaining Wall[2]	X	X	X	X								
Index 6011 CIP Gravity Wall					X							
Index 6020 Permanent MSE Retaining Wall Systems[3]						X	X	X	X	X	X	
Index 6030[4] Temporary MSE Retaining Wall Systems												X

1. If differential settlement exceeds 2.0%, use a Two-phased wall.
2. See Instructions for Design Standards Index 6010.
3. See Design Standards Index 6020.
4. Temporary MSE walls are not addressed in the flowchart but may be used as the first phase of a Two-phased wall system when designed for service life of a permanent MSE Wall.

T.S. = Total Settlement

D.S. = Differential Settlement

Note: No FDOT Wall Type is assigned for Index 6040 (Precast Concrete Sheet Pile Wall) since it is applicable to all environments and settlement criteria.

3.12.1 Cast-in-Place (CIP) Walls

A. CIP cantilever walls are typically used in cut or fill applications and are advantageous in cut/widening projects where there is not sufficient space for soil reinforcement. CIP cantilever walls are sensitive to subsurface conditions; therefore, the foundation soil must be capable of withstanding the design bearing pressure and must exhibit very little differential settlement. See Figures 3.12.1-1 and 3.12.1-2.

Figure 3.12.1-1 Cast-In-Place Wall (Fill Location)

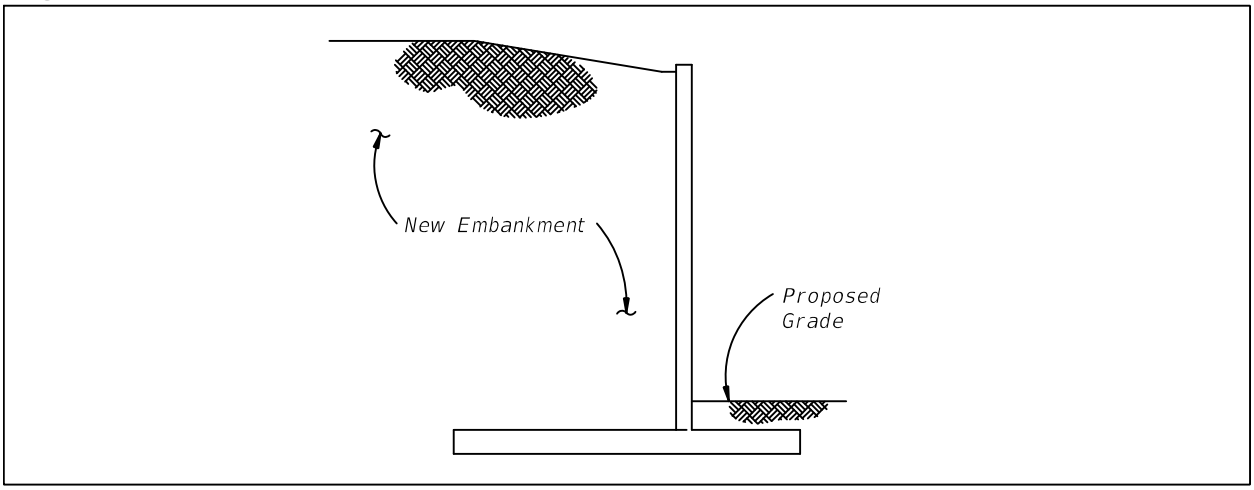

Figure 3.12.1-2 Cast-In-Place Wall (Cut Location)

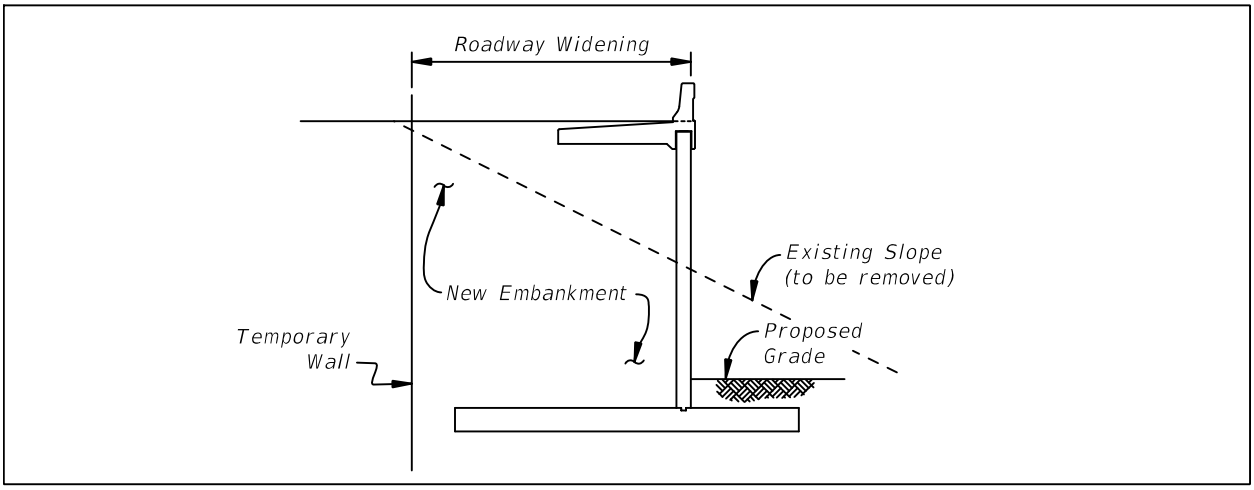

B. The relative cost of CIP walls is greater than MSE walls when the site and environmental conditions allow either wall system provided the wall area is greater than 1000 square feet and wall height greater than 10 feet.

3.12.2 Pile Supported Walls

A. Pile-supported walls are utilized when the foundation soils are not capable of supporting the retaining wall and associated dead and live loads on a spread footing.

B. Pile-supported retaining walls are extremely expensive compared to CIP cantilevered and MSE walls and are only appropriate when foundation soil conditions and/or site constraints do not allow the use of CIP or MSE walls. Pile supported walls are appropriate for cut or fill applications. Temporary sheeting may be required in cut applications. See Figures 3.12.2-1 and 3.12.2-2.

Figure 3.12.2-1 Cast-In-Place Wall - Pile Supported (Fill Location)

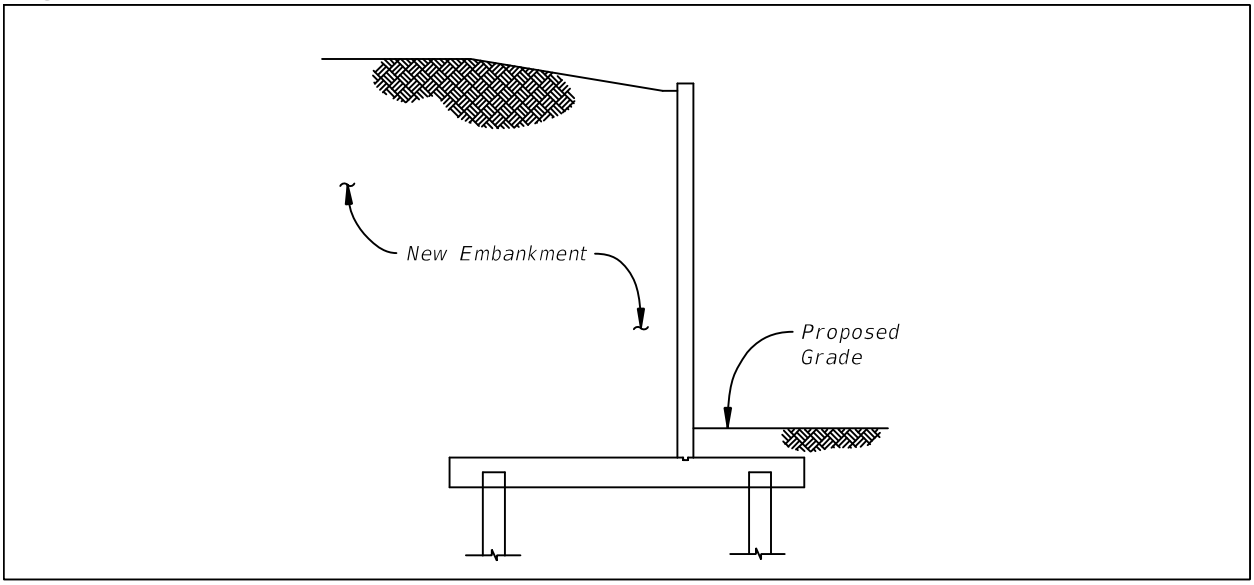

Figure 3.12.2-2 Cast-In-Place Wall - Pile Supported (Cut Location)

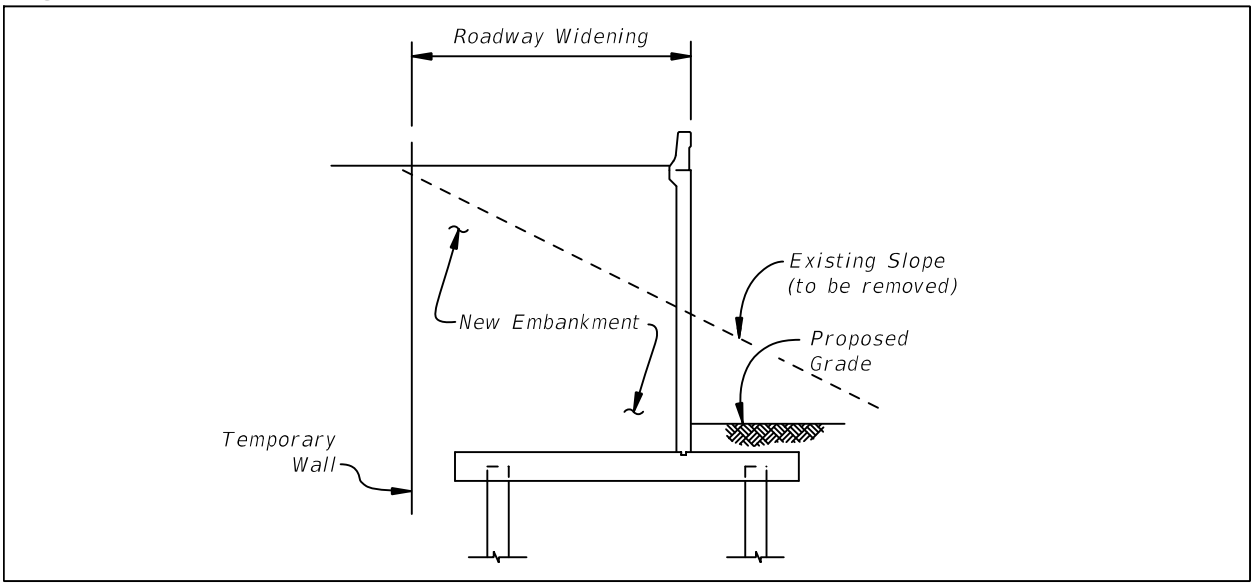

3.12.3 Mechanically Stabilized Earth (MSE) Walls

A. MSE walls are very adaptable to both cut and fill conditions and can tolerate a greater degree of differential settlement than CIP walls. MSE walls, however, are not appropriate for all sites.

B. Metallic soil reinforcements are sensitive to the electrochemical properties of the back fill material and to the possibility of a change in the properties of the back fill materials due to submergence in water classified as Extremely Aggressive from heavy fertilization, salt contamination or partial contact with flowable fill.

Commentary: Straps extending through dissimilar materials, such as flowable fill versus soil, can experience an electrochemical gradient which can lead to accelerated metal deterioration.

C. Geosynthetic soil reinforcement may be required depending on environmental conditions of site. See ***PPM***, Volume 1, Chapter 30. Also site space limitations may preclude the use of MSE walls because of the inability to place the soil reinforcement.

D. MSE walls are generally the most economical of all wall types when the area of retaining wall is greater than 1000 square feet, and the wall is greater than 10 feet in height. See Figs. 3.12.3-1 and 3.12.3-2.

E. When very large total settlements are anticipated, a Two-phased MSE wall system may be necessary.

F. Temporary sheet piling may be necessary to facilitate the placement of soil reinforcement in cut applications.

G. Preapproved MSE wall systems are listed on the ***Qualified Products List***.

Figure 3.12.3-1 MSE Wall (Fill Location)

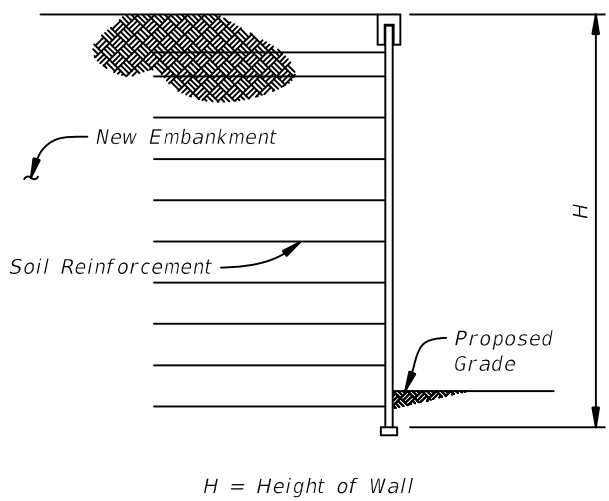

Figure 3.12.3-2 MSE Wall (Cut Location)

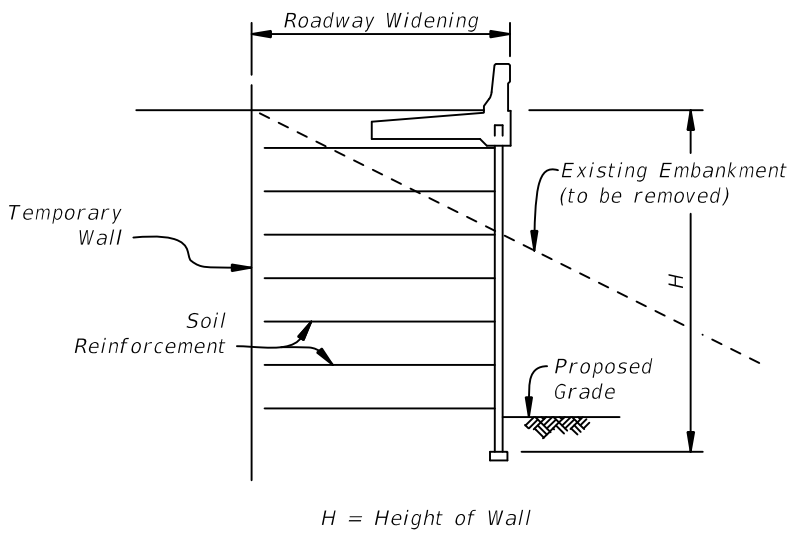

3.12.4 Precast Counterfort Walls

A. Precast counterfort walls are applicable in cut or fill locations. Their speed of construction may have advantages over CIP cantilever walls in congested areas where maintenance of traffic is a problem.

B. This type of wall is generally not as economical as MSE walls but is competitive with CIP walls and may offer aesthetic and constructability advantages. See Figure 3.12.4-1.

Figure 3.12.4-1 Precast Counterfort Wall

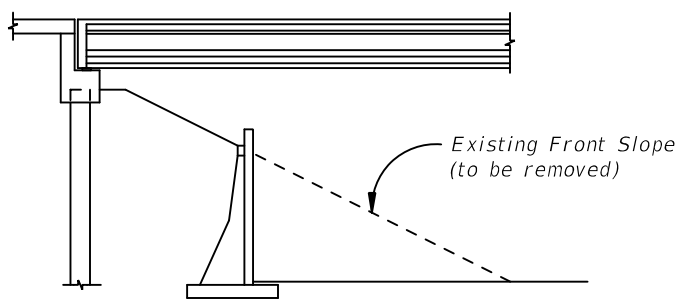

3.12.5 Steel Sheet Pile Walls

A. Steel sheet pile walls are typically used in bulkhead applications or in cut applications where the placement of MSE wall soil reinforcing is difficult. Steel sheet pile walls are typically used in temporary cut applications to facilitate phased construction or allow excavations adjacent to structures or roadways.

B. Generally, steel sheet pile walls can be designed as cantilevered walls up to approximately 15 feet in height. Steel sheet pile walls over 15 feet are tied back with prestressed soil anchors, soil nails, or dead men. See Figure 3.12.5-1.

Figure 3.12.5-1 Tieback Components (Steel Sheet Piles)

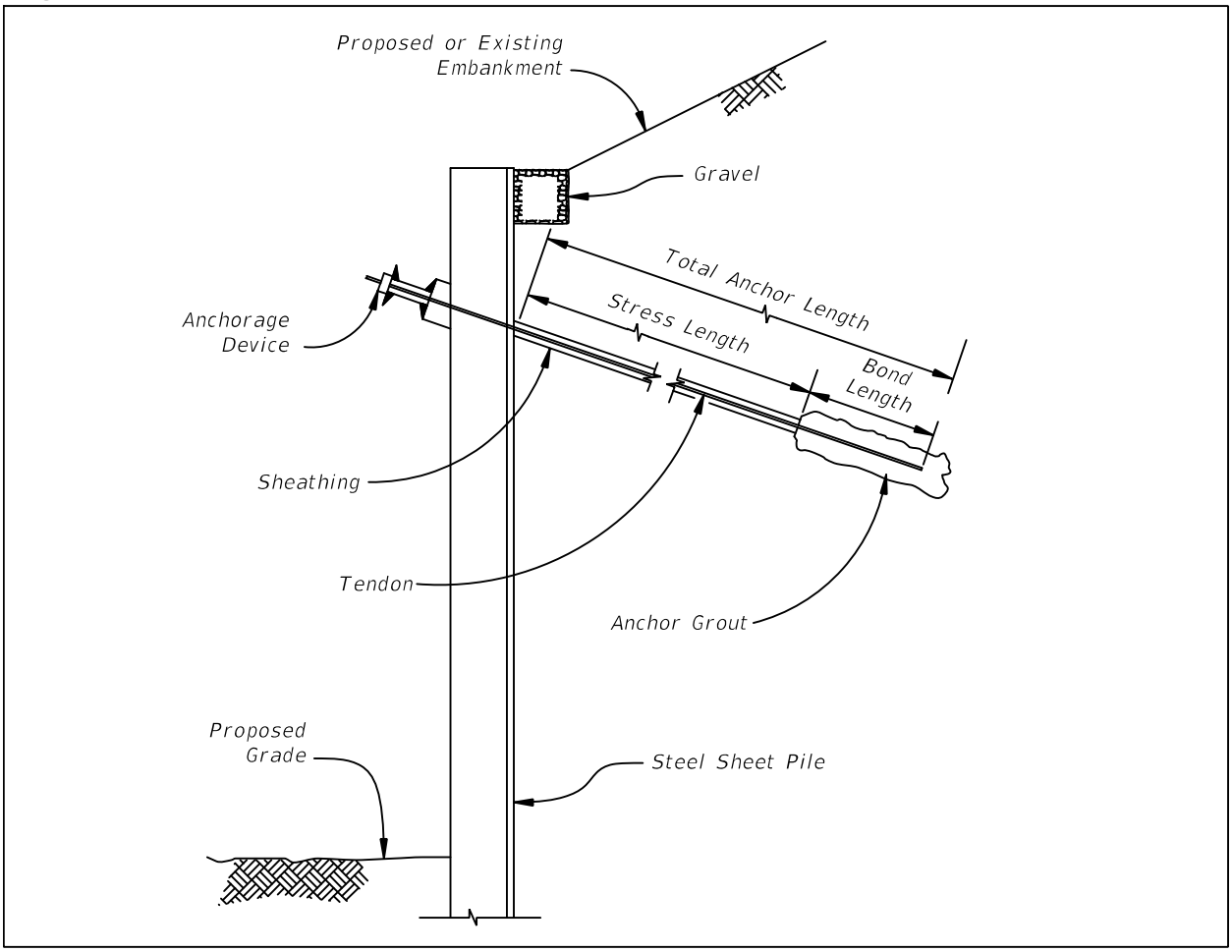

C. Steel sheet pile walls are relatively expensive initially and require periodic maintenance (i.e. painting, cathodic protection).

D. In permanent sheet pile wall applications, concrete facing can be added to address maintenance and aesthetic concerns.

3.12.6 Concrete Sheet Piles

A. Concrete sheet piles are primarily used as bulkheads in either fresh or saltwater.

B. Rock, in close proximity to the ground surface, is a concern with this type of wall as they are normally installed by jetting.

C. Concrete sheet piles when used as bulkheads are normally tied back with dead men. See Figure 3.12.6-1.

Figure 3.12.6-1 Concrete Sheet Pile Bulkhead

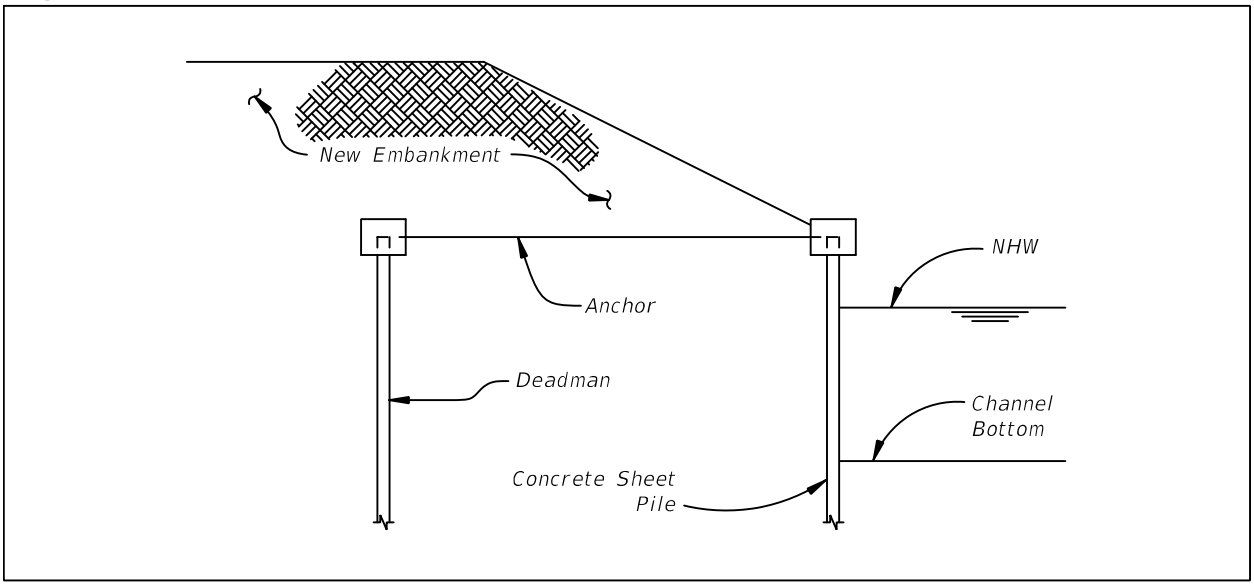

3.12.7 Temporary MSE Walls

A. Temporary MSE walls are applicable in temporary fill situations. The soil reinforcement may be either steel or geogrid. Pre-approved temporary MSE wall systems are listed on the ***Qualified Products List***. See Figure 3.12.7-1.

Figure 3.12.7-1 Wire-Faced - MSE Wall (For Temporary Wall Only)

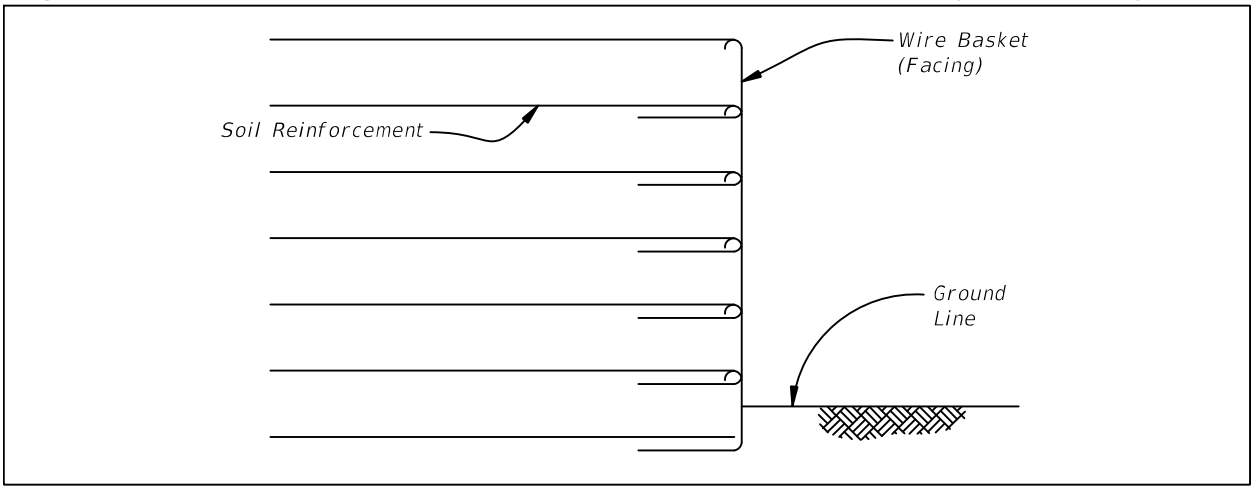

B. Wire faced permanent wall systems may also be used to construct the first phase of a Two-phased MSE wall system where large amounts of settlement are anticipated or where surcharge preloading is required to accelerate settlement. This type of wall is a permanent MSE wall with a temporary facing.

3.12.8 Soil Nails

A. Soil nails can be used in conjunction with soldier pile/panel wall systems or CIP wall facing systems. The soil nail serves as a wall anchor or a soil reinforcing element.

B. A soil nail wall is similar to an MSE wall except the nails are installed into the soil volume without excavating the soil. See Figure 3.12.8-1.

Figure 3.12.8-1 Soil Nail Wall

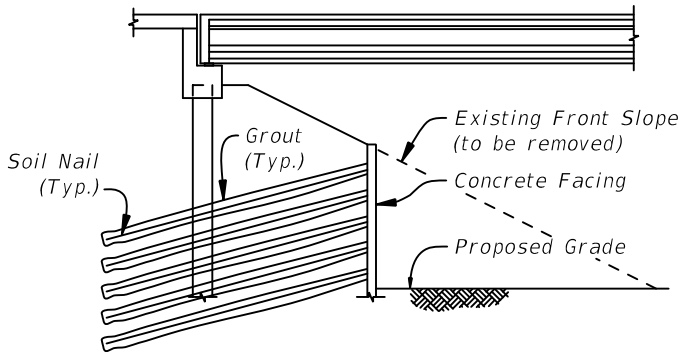

3.12.9 Soldier Pile/Panel Walls

This type of wall is applicable in bulkheads and retaining walls where the environment is Extremely Aggressive and/or rock is relatively close to the ground surface. The cost of this type of wall is very competitive with concrete sheet pile walls. See Figure 3.12.9-1.

Figure 3.12.9-1 Soldier Pile / Panel Wall

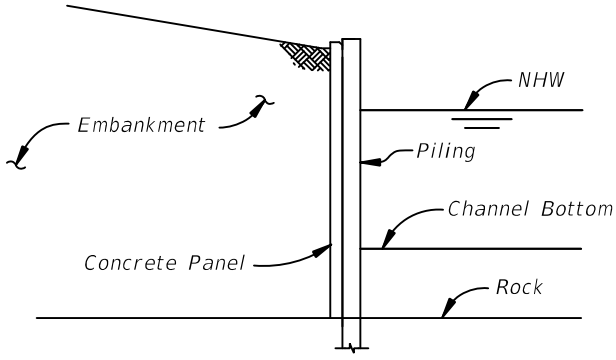

3.12.10 Modular Block Walls

A. Modular blocks consist of dry cast, unreinforced blocks, which are sometimes used as a gravity wall and sometimes used as a wall facing for a MSE variation normally utilizing a geogrid for soil reinforcement.

B. Modular block walls are only acceptable for landscaping walls less than 8 feet in height that are outside the influence of vehicular surcharge.

3.12.11 Permanent - Temporary Wall Combination

A. As more highways are widened, problems have been encountered at existing grade separation structures. The existing front slope at the existing bridge must be removed to accommodate a new lane and a retaining wall must be built under the bridge. Several methods have been used to remove the existing front slope and maintain the stability of the remaining soil. One method is to excavate slots or pits in the existing fill to accommodate soldier piles. The soil is then excavated and timber lagging is placed horizontally between the vertical soldier piles. The soldier piles are tied-back by the use of prestressed soil anchors. See Figure 3.12.11-1. This procedure will maintain the soil while the permanent wall is built. The permanent wall shall be designed to accept all appropriate soil, dead and live loads. The temporary lagging must not contribute to the strength of the permanent wall. See Figure 3.12.1-2.

Figure 3.12.11-1 Tieback Components (Soldier Piles)

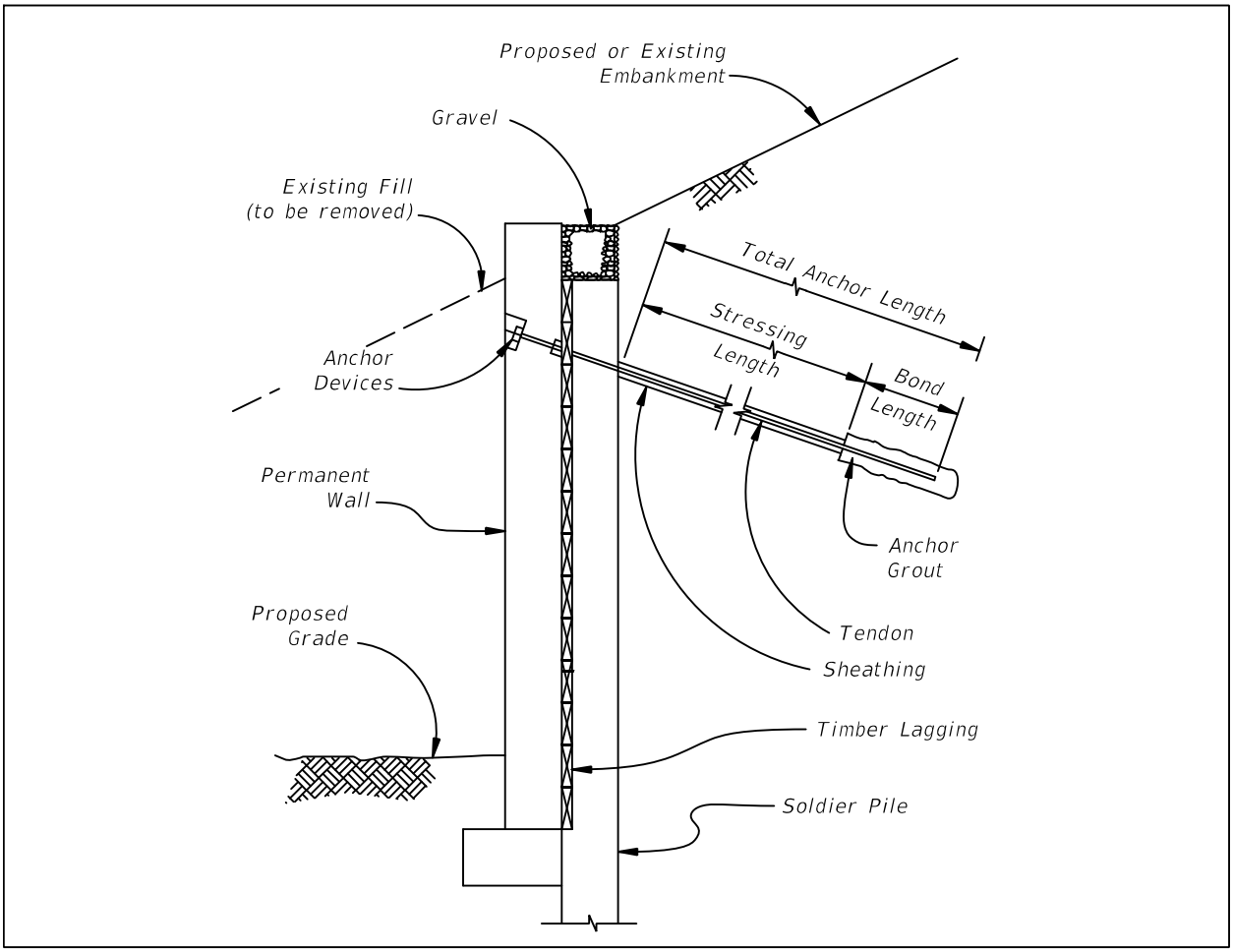

B. Soil nails can also be used in conjunction with temporary shot-crete facing elements to bench-in soil excavations under existing bridges. Once fully excavated the soil nails can be used to anchor the permanent wall facing.

3.12.12 Geosynthetic Reinforced Soil (GRS) Walls and Abutments (Rev. 01/12)

A. GRS abutments are a shallow foundation and retaining wall option that may significantly reduce the construction time and cost of single span bridges.

B. GRS walls and abutments, like MSE walls, are very adaptable to both cut and fill conditions and can tolerate a greater degree of differential settlement than CIP walls. GRS walls, however, are also not appropriate for all sites.

C. GRS walls and abutments are constructed with coarse aggregate or Graded Aggregate Base (GAB) backfill and geosynthetic soil reinforcement. However, site space limitations may preclude the use of GRS walls and abutments because of the inability to place the soil reinforcement.

D. When excessive scour or settlements are anticipated, countermeasures, deep foundations and/or other wall types may be required.

3.13 RETAINING WALL DESIGN

3.13.1 General (Rev. 01/12)

A. See Chapter 30, ***PPM*** Volume 1 and ***SDM*** Chapter 19 for retaining wall plans preparation and administrative requirements in conjunction with the design requirements of this Section. Refer to ***SDG*** Chapter 1 for the retaining wall concrete class (excluding MSE Walls) and reinforcing steel cover requirements.

B. Rankine earth pressure may be used in lieu of Coulomb earth pressure. If Rankine earth pressure is used, the resultant lateral earth load can be assumed to be located at the centroid of the earth pressure diagram.

C. During the design process, review wall locations for conflicts with existing or proposed utilities and drain pipes located beneath or adjacent to the proposed wall and/or reinforced soil zone. Analyze for constructability, settlement effects, wall stability, maintenance repair access, potential for relocation of the utility or drain pipe, etc. Coordinate wall and utility locations and designs with the District Utilities Engineer.

D. Do not place utilities or longitudinal drainage conveyances in the soil-reinforced zone behind Mechanically Stabilized Earth (MSE) or tie-back walls.

Commentary: It is undesirable and in some cases impossible to incorporate drain pipes and utilities within the layered structural elements in the reinforced soil zone of an MSE Wall, considering special design and construction difficulties result from introducing obstructions. Drain pipes and utilities placed below the wall or in the reinforced soil zone cannot be maintained because excavation in this zone can potentially undermine stability of the wall. In addition, leaking pipes can generate soil wash out and compromise the structural integrity of the wall. Special design constraints may be imposed when a pressurized utility carrier is placed within, through, under, or

immediately adjacent to an MSE Wall. This is to assure the design of structural elements takes into consideration support limitations that may be created by the presence of utilities and potential damage or failure if a pressurized utility carrier leaks.

3.13.2 Mechanically Stabilized Earth Walls [11.10] (Rev. 01/12)

Commentary: ***FHWA Publication No. FHWA-NHI-00-043, "Mechanically Stabilized Earth Walls and Reinforced Soil Slopes Design & Construction Guidelines"****, contains background information on the initial development of MSE wall design and is referenced by* ***LRFD*** *[11.10.1] as the design guidelines for geometrically complex MSE walls.*

A. For concrete class and cover requirements, refer to the Design Standard for the FDOT Wall Type as determined using Figure 3.12-2:

B. Minimum Service Life [11.5.1]

   1. Design permanent walls for a service life of 75 years, except those supporting abutments on spread footings. Design walls supporting abutments on spread footings for a service life of 100 years.

   2. Design temporary walls for the length of contract or a service life of three years, whichever is greater.

C. Concrete Leveling Course

   1. All permanent walls will have a non-structural concrete leveling course as a minimum.

   2. The entire bottom of the wall panel will have bearing on the concrete leveling course.

D. Bin Walls [11.10.1]

   1. When two walls intersect forming an internal angle of less than 70 degrees, design the nose section as a bin wall. Submit calculations for this special design with the plans for review and approval.

   2. Design structural connections between wall facings within the nose section to create an at-rest bin effect without eliminating flexibility of the wall facings to allow tolerance for differential settlements.

   3. For wall facings without continuous vertical open joints, such as square or rectangular panels, design the nose section to settle differentially from the remainder of the structure with a slip joint. Facing panel overlap, interlock or rigid connection across vertical joints is not permitted.

   4. Design soil reinforcements to restrain the nose section by connecting directly to each of the facing elements in the nose section. Run soil reinforcement into the backfill of the main reinforced soil volume to a plane at least 3 feet beyond the Coulomb (or Rankine) failure surface. See Figure 3.13.2-1.

5. Design of facing connections, pullout and strength of reinforcing elements and obstructions must conform to the general requirements of the wall design.

Figure 3.13.2-1 Design Criteria for Acute Corners of MSE Bin Walls

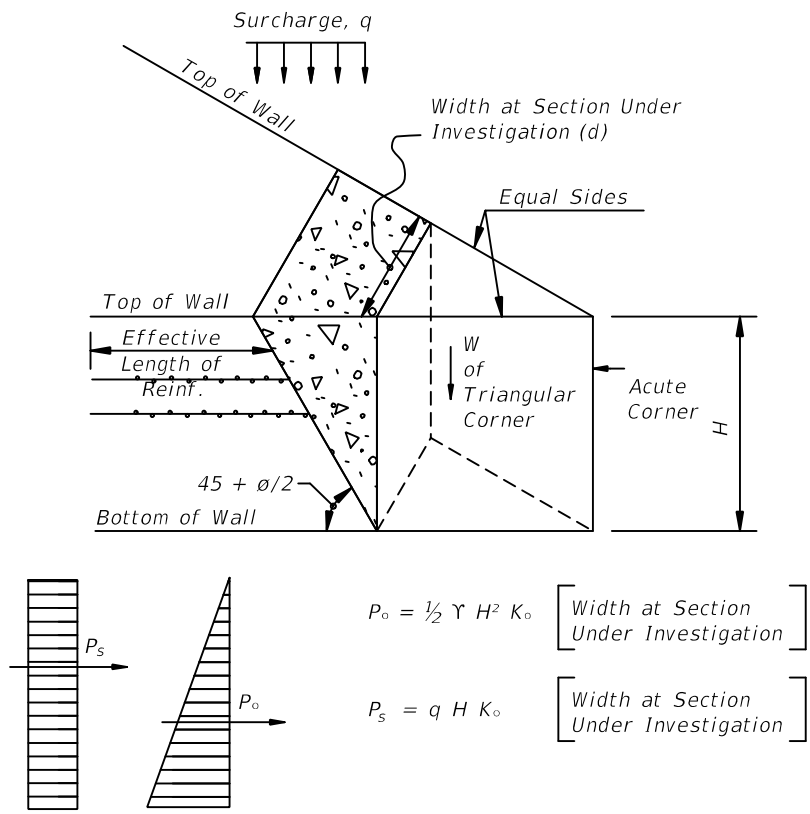

Note : Analyze the acute corner at each Column of Panel Joints until no reinforcement beyond the failure surface is required (i.e. until the factored sliding resistance is greater than the factored horizontal earth loads).

E. Minimum Length of Soil Reinforcement [11.10.2.1]

In lieu of the requirements for minimum soil reinforcement lengths in ***LRFD*** [C11.10.2.1] use the following:

The minimum soil reinforcement length, "**L**", measured from the back of the facing element, must be the maximum of the following:

Walls in Front of Abutments on Piling $\mathbf{L} \geq \mathbf{8}$ feet and $\mathbf{L} \geq \mathbf{0.7H}$.

Walls Supporting Abutments on Spread Footings $\mathbf{L} \geq \mathbf{22}$ feet and $\mathbf{L} \geq \mathbf{0.6}(\mathbf{H} + \mathbf{d}) + \mathbf{6.5}$ feet, (**d** = fill height above wall) and $\mathbf{L} \geq \mathbf{0.7H}$

Where: **H** = height of wall, in feet, and measured from the top of the leveling pad to the top of the wall coping. **L** = length in feet, required for external stability design.

Commentary: As a rule of thumb, for a MSE wall with reinforcement lengths equal to 70% of the wall height, the anticipated factored bearing pressure ($\boldsymbol{q}_{uniform}$) can be estimated to be about 200% of the overburden weight of soil and surcharge. It may

*be necessary to increase the reinforcement length for external stability to assure that the factored bearing pressure does not exceed the factored bearing resistance (**q_r**) of the foundation soil at this location.*

F. Minimum Front Face Wall Embedment [11.10.2.2]

1. Consider scour and bearing capacity when determining front face embedment depth.
2. Consult the District Drainage and Geotechnical Engineers to determine the elevation of the top of leveling pad.
3. In addition to the requirements for minimum front face embedment in ***LRFD*** [11.10.2.2], the minimum front face embedment for permanent walls must comply with both a minimum of 24-inches to the top of the leveling pad and Figure 3.13.2-2. Also, consider normal construction practices. See ***SDM*** Chapter 19 for additional details.

Figure 3.13.2-2 MSE Wall Minimum Front Face Embedment

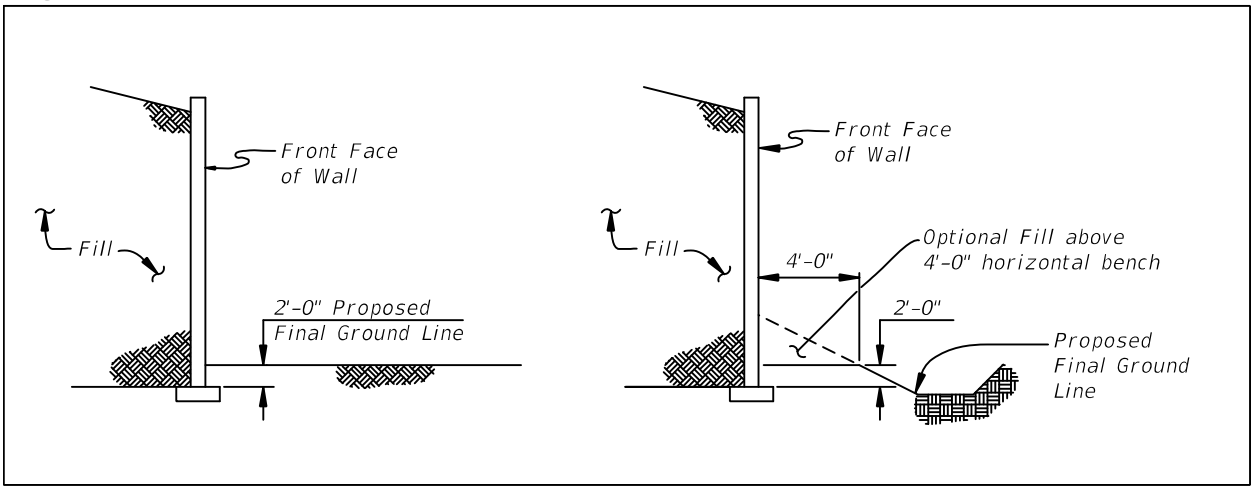

G. Facing [11.10.2.3]

1. The typical panel size must be square and not exceed 30 square feet in area (5 feet by 5 feet, nominal).
2. The typical non-square (i.e., diamond shaped, not rectangular) panel size must not exceed 40 square feet in area.
3. Special panels (top out, etc.) must not exceed 50 square feet in area.
4. Full-height facing panels must not exceed 8 feet in height.
5. SDO will consider use of larger panels on a case-by-case basis. The reinforcing steel concrete cover must comply with the Design Standard for the FDOT Wall Type as determined using Figure 3.12-2.

H. External Stability [11.10.5] The reinforced backfill soil parameters for analysis are:

1. Sand Backfill (Statewide except Miami-Dade and Monroe Counties).
   a. Moist Unit Weight: 105 lbs per cubic foot.
   b. Friction Angle: 30 degrees

2. Limerock Backfill (Miami-Dade and Monroe Counties only).
   a. Moist Unit Weight: 115 lbs per cubic foot.
   b. Friction Angle: 34 degrees.
3. Flowable Fill Backfill (Statewide)
   a. Total Unit Weight: 45 to 125 lbs per cubic foot.
   b. f'c: minimum 75 psi
4. In addition to the horizontal back slope with traffic surcharge figure in ***LRFD***, Figure 3.13.2-3 illustrates a broken back slope condition with a traffic surcharge. If a traffic surcharge is present and located within 0.5H of the back of the reinforced soil volume, then it must be included in the analysis. Figure 3.13.2-4 illustrates a broken back slope condition without a traffic surcharge.

Figure 3.13.2-3 Broken Backfill with Traffic Surcharge

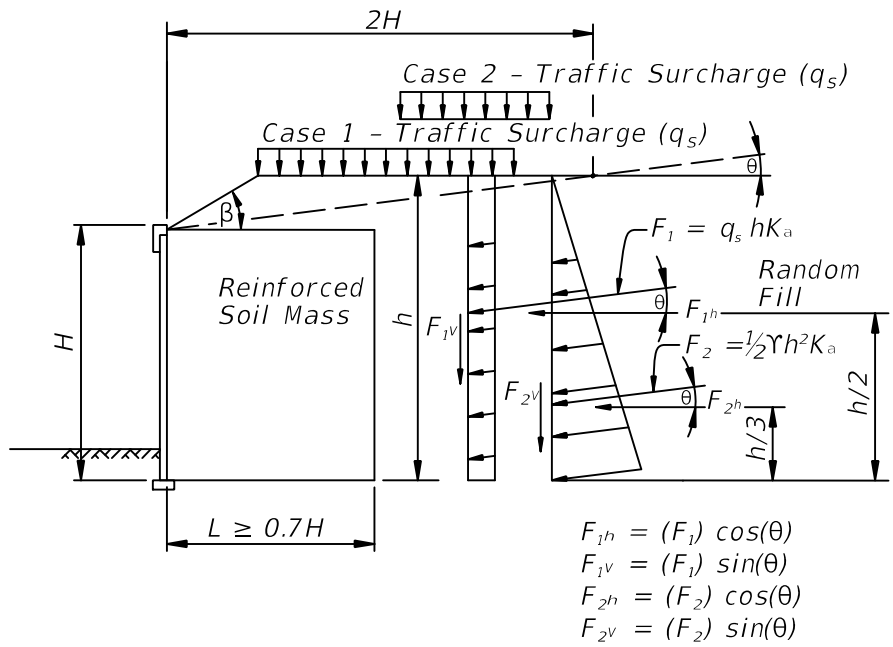

Case 1 – used for bearing resistance, reinforcement tensile resistance and overall stability calculations.

Case 2 – used for sliding, eccentricity, and reinforcement pullout resistance calculations.

$$K_a \text{ For Random Fill : } K_a = \cos(\theta)\left[\frac{\cos(\theta) - \sqrt{\cos^2(\theta) - \cos^2\varnothing}}{\cos(\theta) + \sqrt{\cos^2(\theta) - \cos^2\varnothing}}\right]$$

$\varnothing$ = *friction angle of back fill or foundation, whichever is lowest.*

Loads shown are unfactored. Use appropriate load and resistance factors in analysis. (See SDG 3.13.2.H.6 for a link to the LRFD External Stability Analysis for MSE Walls program).

Figure 3.13.2-4 Broken Backfill without Traffic Surcharge

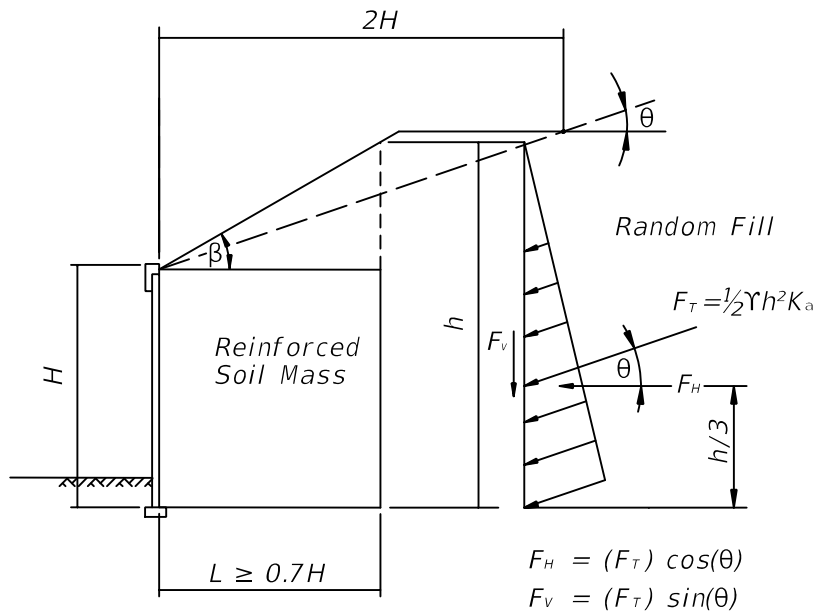

$F_H = (F_T)\cos(\theta)$

$F_V = (F_T)\sin(\theta)$

For Infinite Slope $\theta = \beta$

K_a For Random Fill : $K_a = \cos(\theta)\left[\frac{\cos(\theta) - \sqrt{\cos^2(\theta) - \cos^2\varnothing}}{\cos(\theta) + \sqrt{\cos^2(\theta) - \cos^2\varnothing}}\right]$

$\varnothing$ = friction angle of back fill or foundation, whichever is lowest.

Loads shown are unfactored. Use appropriate load and resistance factors in analysis. (See SDG 3.13.2.H.6 for a link to the LRFD External Stability Analysis for MSE Walls program).

5. The Geotechnical Engineer of Record for the project is responsible for designing the reinforcement lengths for the external conditions shown in Figure 3.13.2-5 and any other conditions that are appropriate for the site.

Figure 3.13.2-5 Proprietary Retaining Walls

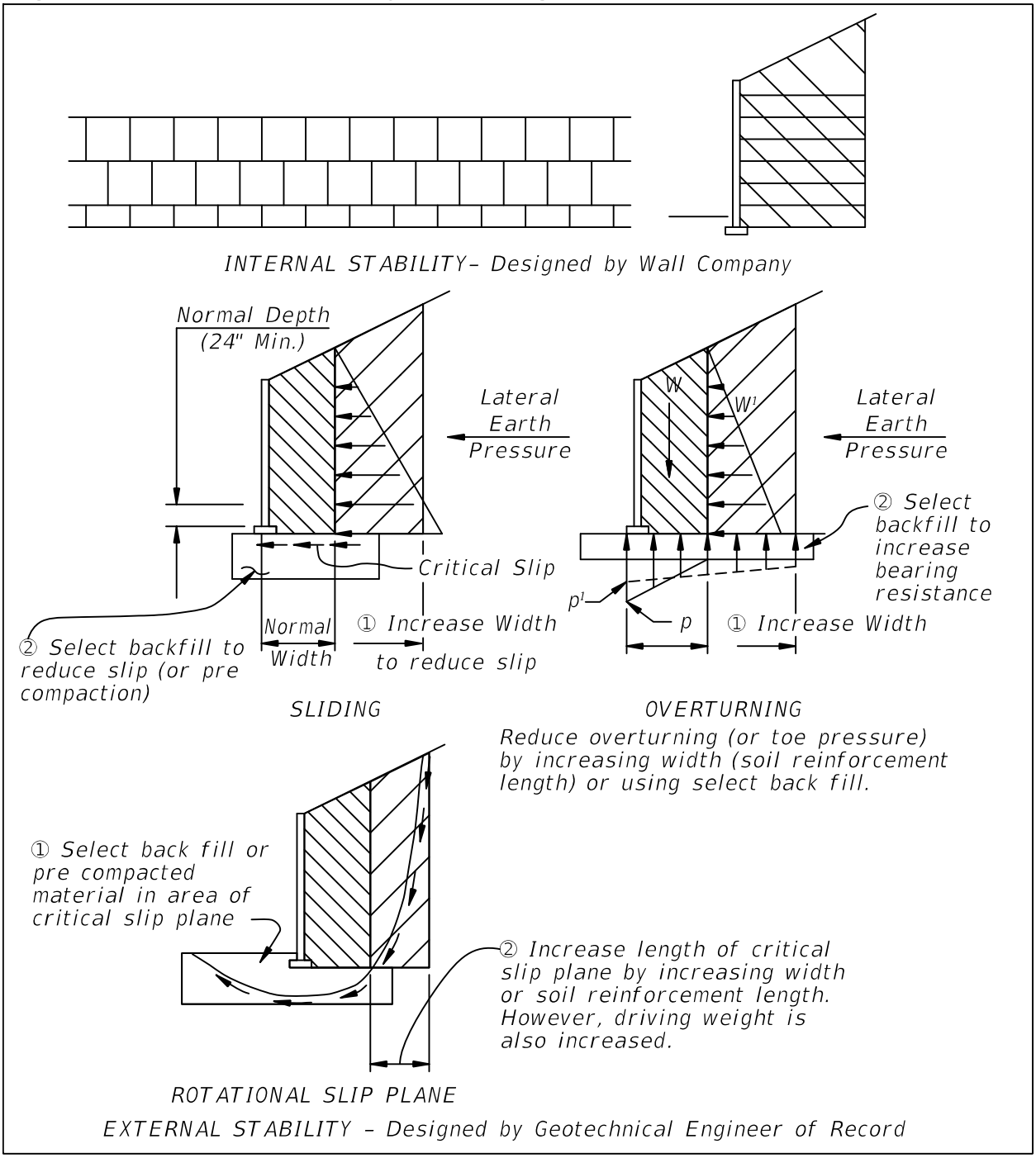

6. Click for the ***LRFD*** External Stability Analysis for MSE Walls (v2.5).

I. Apparent Coefficient of Friction [11.10.6.3.2] The pullout friction factor (F*) and the resistance factor for pullout (Ø) need not be modified for the design of soil reinforcement below the design flood elevation when the angle of internal friction is determined for saturated conditions.

J. Soil Reinforcement Strength [11.10.6.4]

1. In lieu of the corrosion rates specified in ***LRFD*** [11.10.6.4.2a], substitute the following requirements: The following corrosion rates for metallic reinforcement apply to permanent MSE Walls within non-corrosive environments only (low and moderate air contaminants where distance (D) from the wall to an Environmental Source of Interest is greater than 300 ft. See Figure 3.12-2 for more information.):
   a. Zinc (first 2 years) 0.59 mils/year
   b. Zinc (subsequent years to depletion) 0.16 mils/year
   c. Carbon Steel (after depletion of zinc to 75 years) 0.48 mils/year
   d. Carbon Steel (75 to 100 years) 0.28 mils/year
2. Use a minimum corrosion rate of 6 mils/year for Temporary MSE Walls with:
   a. non-stainless metallic reinforcement below the 100 year flood elevation with chloride content above 2,000 ppm.
   b. structural wire facing and connections exposed to extreme air contaminants (where distance (D) from the wall to an Environmental Source of Interest is less than or equal to 300 ft. See Figure 3.12-2 for more information).
3. Do not use metal soil reinforcement if the wall is located within the 100 year flood plain and the nearby water chloride content is greater than 2,000 ppm.
4. Epoxy coated reinforcement mentioned in ***LRFD*** [C11.10.6.4.2a] is not permitted. Passive metal soil reinforcement (i.e., stainless steel, aluminum alloys, etc.), is permitted only with written SDO approval.
5. Geosynthetic reinforcements (***LRFD*** [11.10.6.4.2b]) must comply with Chapter 31 of the ***PPM***, Volume 1. Use the same reinforcement properties as those for geosynthetic reinforced soil slopes shown on ***Design Standards*** Index 501 with a maximum 2% strain for permanent walls and 5% strain for temporary walls.
6. For geosynthetic reinforcement, supplement ***LRFD*** Table 11.10.6.4.3b-1 with the following default value:

Application	Total Reduction Factor, RF
Critical temporary wall applications with non-aggressive soils and polymers meeting the requirements listed in Table 11.10.6.4.2b-1.	7.0

7. For permanent wall systems using welded wire soil reinforcement, the minimum wire size in both the longitudinal and transverse directions shall be W10 for walls with a 75-year service life and W11 for walls with a 100-year service life.

8. Do not design soil reinforcement to be skewed more than 15 degrees from a position normal to the wall panel unless necessary and clearly detailed for acute corners. In these instances, follow the pre-approved bin wall details shown in the QPL Vendor Drawings.

Commentary: There are times when the 15 degree criteria cannot be met due to vertical obstructions such as piling, drainage structures or bridge obstructions with angles. In these cases, clearly detail the soil reinforcement skew details in the Shop Drawings.

9. Do not design soil reinforcement to be skewed more than 15 degrees from a horizontal position in elevation view to clear horizontal obstructions.

10. Soil reinforcement must not be attached to piling, and abutment piles must not be attached to any retaining wall system.

K. Reinforcement/Facing Connection [11.10.6.4.4] Design the soil reinforcement to facing panel connection to assure full contact of the connection elements. The connection must be able to be inspected visibly during construction.

Commentary: Normally mesh and bar mats are connected to the facing panel by a pin passing through loops at the end of the reinforcement and loops inserted into the panels. If these loops are not aligned, then some reinforcement will not be in contact with the pins causing the remaining reinforcement to be unevenly stressed and/or over stressed. If the quality of this connection cannot be assured through pullout testing and quality control during installation, then the strength of the soil reinforcement and its connections shall be reduced accordingly.

L. Flowable Fill Backfill

1. Flowable fill backfill will prevent the MSE wall from adapting to differential settlements as well as sand or limerock backfilled MSE walls, however, the use of flowable fill may speed wall construction. Flowable fill backfill is permitted only with written SDO approval.
2. Prior to requesting approval, verify external stability, the accommodation of anticipated settlements and the cost effectiveness of flowable fill backfill.
3. Provide 1'-0" flowable fill cover in all directions between metallic soil reinforcement and adjacent sand or limerock backfill. Provide 3 feet of sand or limerock backfill between the top of the flowable fill and the bottom of the roadway base.
4. Indicate the minimum and maximum flowable fill unit weights which will satisfy all external stability requirements with a range of at least 10 pcf.
5. Provide for drainage of water between the flowable fill and the MSE wall panels.

M. End Bents on Piling or Drilled Shafts behind MSE Walls

1. Locate MSE Walls adjacent to end bents so as to avoid any conflicts with the end bent foundation elements. See ***SDM*** 19.6.

2. The minimum clear distance shall be 24-inches for the following:
   a. Between the front face of the end bent cap or footing and the back face of wall panel.
   b. For battered piles, at the base of the wall between the face of piling and the leveling pad. Note: The 24-inch dimension is based on the use of 18-inch piles. For larger piles and drilled shafts, increase the clear distance between the wall and pile or drilled shaft such that no soil reinforcement is skewed more than 15 degrees.
3. Soil reinforcement to resist the overturning produced by the earth load, friction, and temperature must be attached to end bents, unless the total settlement of the soil above the bottom of the end bent cap exceeds 4-inches. In this case, the reinforcement must not be attached to the end bent and a special wall behind (such as a FDOT Type 3 wall without wire facing or baskets) the backwall must be designed to accommodate the earth load.

N. End Bents on Spread Footings behind MSE Walls:

1. The spread footing must be sized so that the factored bearing pressure does not exceed 6,000 psf.
2. The edge of the footing must be a minimum of 12-inches behind the back of the wall panel.
3. The minimum distance between the centerline of bearing on the end bent and the back of the wall panel must be 48-inches.

O. Back-To-Back MSE Walls:

Design Back-to-back MSE walls in accordance with Section 6.4 of ***FHWA-NHI-10-024 Design and Construction of Mechanically Stabilized Earth Walls and Reinforced Slopes – Volume I.***

P. GRS Walls and Abutments

Commentary: FHWA Publication No. FHWA-HRT-11-026 "Geosynthetic Reinforced Soil Integrated Bridge System Interim Implementation Guide" (GRS Guide) contains background information and design steps for GRS walls and abutments. (Refer to this guide for Figures referenced below)

1. GRS Abutments may be used to support single span bridges which are not at risk of movement due to sliding, uplift, etc.
2. Design the GRS abutment in accordance with the LRFD methodology contained in Appendix C of the GRS Guide, except as otherwise described in this section.
3. Coordinate with the Drainage/Hydraulics Engineer to determine the design scour depth at the abutment with respect to the distance between abutments.
4. Utilize a Reinforced Soil Foundation (RSF) in lieu of the concrete leveling course utilized for MSE walls. (See Figure 30 and Section 7.4 of the GRS Guide)

5. Detail the bottom layer of reinforcement for the GRS abutment to bear on top of the RSF at the design scour elevation or 6 inches below the finished ground surface, whichever is deeper.
6. Ensure the minimum length of reinforcement, B (bottom layer of reinforcement) is not less than 6 feet.
7. Ensure the thickness of the RSF is 18 inches or 0.25B, whichever is greater.
8. Extend the RSF a distance of at least 18 inches or 0.25B, whichever is greater, in front of the wall facing.
9. Use a maximum vertical reinforcement spacing of 8 inches. (In the bearing reinforcement zone the reinforcement spacing is reduced by 50%.)
10. GRS Walls are designed as GRS Abutments but without a “Bearing Reinforcement Zone.”
11. GRS Walls and Abutments are constructed in accordance with Developmental Specification 549 using the following materials:
    a. Index 501 Geogrid or Woven Geotextile reinforcement with both:
        i. Approved Application Usage 1 or 3, and
        ii. An ultimate tensile strength exceeding the ultimate strength requirements computed for the project, or an ultimate tensile strength of 4,800 lbs per foot in both the machine and cross directions, whichever is greater.
    b. Graded Aggregate Base (GAB) backfill meeting the requirements of Specification 204.
    c. 8”x8”x16” Concrete Masonry Units meeting the requirements of Specification 949-3.
    d. Non-epoxy-coated rebar
12. Testing by the State Materials Office indicates the following GAB backfill design values should be assumed for design: γ_{NAT} = 144 pcf, φ_f = 42 deg, C = 0

3.13.3 Permanent and Critical Temporary Sheet Pile Walls

A. Determine the required depth of sheet pile embedment (**D**) using the procedure outlined in ***LRFD*** [11.8.4] and described in detail in ***LRFD*** [C11.8.4.1] with load factors of 1.0 and the appropriate resistance factor from ***LRFD*** [11.6.2.3].

B. Determine the required sheet pile section in accordance with ***LRFD*** [11.8.5], using the normal load factors for each load case.

C. When the supported roadway will be paved or resurfaced before the wall deflects, the design horizontal deflection shall not exceed 1-1/2 inches.

D. When the supported roadway will be paved or resurfaced after the wall deflects the design horizontal deflection shall not exceed 3 inches.

E. When the wall maintains the structural integrity of a utility, the design horizontal deflection shall be established on a case-by-case basis in cooperation with the utility owner.

Commentary - The above deflection limits for Cases C and D are intended to maintain confinement of the subsoils supporting the roadway. The increased limit in Case D above assumes the lost confinement will be restored by the compaction effort exerted during resurfacing. The deflection limit for Case E will vary by the sensitivity of the utility and its location in the supported embankment.

F. For permanent concrete sheet pile walls, comply with the tensile stress limits in ***LRFD*** [5.9.4.2.2] and apply the "severe corrosive conditions" to walls with an Extremely Aggressive environment classification.

3.14 FENDER SYSTEMS (Rev. 01/12)

3.14.1 General

A. Bridge fender systems serve primarily as navigation aids to vessel traffic by delineating the shipping channel beneath bridges. Fender systems must be robust enough to survive a multitude of bumps and scrapes from barge traffic, while being sufficiently flexible to absorb kinetic energy when redirecting an errant barge or other vessel. It is expected that this type of design will minimize the potential for damage to vessels and fenders during a minor collision while being able to redirect some vessel impacts that would otherwise destroy a more rigid style fender system. To maintain the flexibility of the fender system and its ability to absorb kinetic energy and smoothly redirect errant vessels, do not connect the fender system to a pier or footing.

B. The Department determines when fender systems or other protective features are required and requests U.S. Coast Guard (USCG) concurrence with plan details and locations. Coordination with the Army Corps of Engineers and local government agencies is also encouraged as they may have plans that could affect the channel alignment/depth and/or type/volume of vessel traffic.

C. A fender system will be required for the majority of bridges over navigable waterways in Florida under the jurisdiction of the USCG. In some cases, circumstances such as deep water, poor soil conditions and /or heavy vessel traffic will lead to long span designs of bridges. If the bridge span is approximately 2.5 times the required navigation channel and the navigation channel is centered on the span, omit a fender system unless required by the USCG. Each bridge site is unique and the USCG will evaluate the Department's plans based on local characteristics such as accident history, water velocities and cross currents, geometry of the channel, etc. If a fender system is omitted, a conservative approach should be taken with respect to the minimum pier strength requirements as developed with the Vessel Collision Risk Analysis.

D. Acceptable fender systems include:

1. Design Standard Index 21900 with associated QPL listed pile configurations for use at locations with or without steel hulled commercial barge traffic.
2. If allowed by the District, Design Standard Index 21930 for use only at locations where steel hulled commercial barge traffic is non-existent.
3. A custom designed fender system based on Design Standard Index 21900. A custom design will be required where:
   a. The "Required Freestanding Pile Height" is greater than the "Freestanding Pile Height" assumed in Paragraph 3.14.3.E.1. The "Required Freestanding Pile Height" as shown in Figure 3.14.1-1 is determined by the EOR using project specific conditions and is defined as the following:

      High water elevation plus 8' minimum (from Index 21900), minus the lesser of:

      - Elevation of top of soil layer with N ≥ 6, OR
      - Elevation of top of existing ground line minus ½ predicted 100 year scour depth.

   b. The standard geometry shown on Design Standard Index 21900 cannot be used.

Figure 3.14.1-1 Required Freestanding Pile Heights

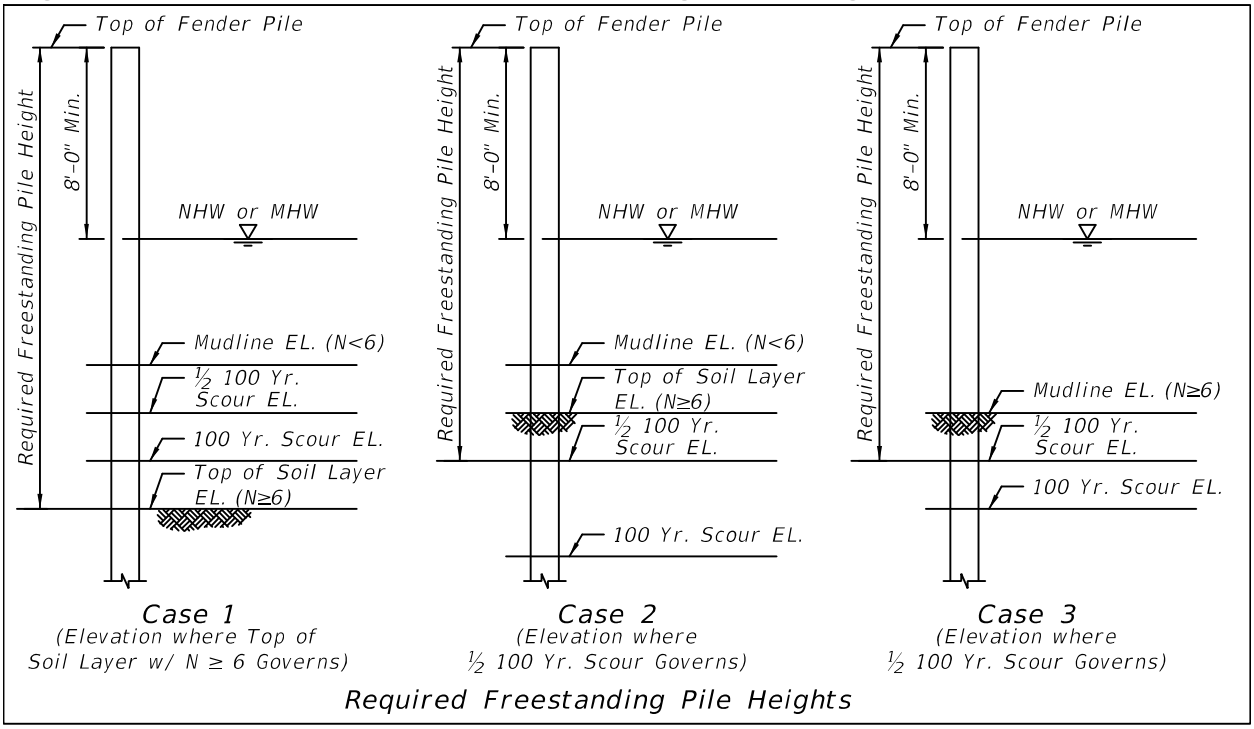

E. Dolphins and islands can be used to protect existing bridge substructures that were not designed to resist vessel collision loads and in some cases are used to protect the substructures of bridges located at port facilities. Typically the use of dolphins and

islands is discouraged as they also represent a hazard to vessels, aggravate scour and increase water flow velocities. The use of dolphins and islands will require customized designs and usually will include extensive hydraulic and geotechnical evaluations.

3.14.2 EOR's Design Procedure

A. Use the following procedure for determining the fender system type and associated "Required Energy" (required energy absorption capacity), as defined below, that are to be shown in the plans.

B. Determine if steel hulled barge traffic is present using the Past Point map link below:

http://www.dot.state.fl.us/structures/pastpointmaps/vppm.shtm

If there is a Past Point at the fender location, steel hulled commercial barge traffic is present.

C. Fender system design and energy absorption requirements where steel hulled commercial barge traffic exists:

1. Use fender systems with polymeric piles. These fender systems should resist the "Required Energy" which is defined as the "Minimum Energy" (minimum energy absorption capacity) obtained from Table 3.14.2-1 plus any "Additional Energy" (additional energy absorption capacity) at the discretion of the District Structures Design Engineer or District Structures Maintenance Engineer. The "Minimum Energy" is based on the fender system location and the 90th percentile of barge traffic at that location. When determining the need for "Additional Energy" requirements, consider site conditions, past accident history, maintenance records, volume and size of vessel traffic and bridge main span length relative to channel width. Contact the SDO for assistance in determining the magnitude of "Additional Energy" and/or if the 100th percentile of barge traffic is desired.

2. Determine the Past Point of the fender system using the Past Point map link provided above.

3. Using the Past Point of the fender system obtained from the appropriate Past Point map, enter Table 3.14.2-1 to determine the "Minimum Energy".

4. Verify that the project specific "Required Freestanding Pile Height" is within the design assumptions listed in 3.14.3.E.1 and the fender height requirements shown on Design Standards Index 21900, and that a QPL listed pile configuration is available that provides the necessary "Required Energy". Include half of the scour depth determined for the 100-yr storm when determining "Required Freestanding Pile Height". Where "Required Energy" values exceed the "Energy Capacity" (energy absorption capacity) of the QPL listed polymeric pile configurations, configurations having the highest "Energy Capacity" of all approved polymeric pile configurations may be used at the discretion of the District. Otherwise use a custom fender system design.

5. Use Design Standards Index 21900 unless a custom design is required. See the Instructions for Design Standards (IDS) Index 21900 for more information and plan content requirements.
6. Establish fender location so as to provide the required horizontal navigation clearance and where economically feasible also provide an offset of 10 feet between the back of the fender and the near face of the adjacent pier or footing.

Table 3.14.2-1 Table of Past Points and associated Minimum Energies

Past Point	Minimum Energy (k-ft)	Past Point	Minimum Energy (k-ft)	Past Point	Minimum Energy (k-ft)	Past Point	Minimum Energy (k-ft)
1	466	14	201	27	455	40	273
2	437	15	445	28	199	41	248
3	205	16	557	29	199	42	179
4	233	17	571	30	233	43	179
5	213	18	434	31	423	44	190
6	218	19	2426	32	206	45	190
7	218	20	244	33	218	46	199
8	492	21	237	34	188	47	261
9	179	22	179	35	218	48	261
10	54	23	412	36	221	49	206
11	54	24	199	37	273	50	209
12	54	25	458	38	1387	51	208
13	254	26	479	39	2426	52	208

Commentary: The "Minimum Energy" for each Past Point shown in Table 3.14-1 has been determined by following the procedure as outlined in the commentary of the AASHTO "Guide Specification and Commentary for Vessel Collision Design of Highway Bridges", Second Edition, 2009, Section C3.8. Assumptions made in determining the "Minimum Energy" are as follows:

$\mu = 0.15$

$\alpha = 15$ *degrees*

$V = 6.4$ *fps*

W = as determined by the maximum barge weight plus the tug weight specific to each Past Point (If needed, contact the SDO for more information).

D. At locations where barge traffic is nonexistent, use fender systems with either polymeric piles or prestressed concrete piles at the discretion of the District Structures Design Engineer or District Structures Maintenance Engineer. The "Required Energy" for these fender systems with polymeric piles is 38 (k-ft) which is equal to the "Energy Capacity" of the fender system shown in Index 21930. See the Instructions for Design Standards (IDS) Index 21900 or 21930, as applicable, for more information and plan content requirements.

E. When a custom fender system design is required due to the condition(s) listed in 3.14.1.D.3.a and the use of polymeric piles is preferred by the District, fully detail the custom fender system geometry in the plans but do not show mandatory pile configurations. Utilize the standard geometry, wales and dimensional lumber shown on Design Standards Index 21900 as applicable. Include custom Data Tables in the plans based on those used for Design Standards Index 21900 and place the "Required Energy" in the Data Table Notes. Delete from the Data Table Notes the note requiring that a QPL listed fender system configuration be used. List the in-situ soil properties including unit weight, angle of internal friction (phi) and subgrade modulus and the "Required Freestanding Pile Height". Include the following associated Plan Notes:

1. This information is to be used by the Contractor's EOR to complete the custom fender system design utilizing piles of the same type and materials as shown on a QPL listed pile configuration.
2. Submit shop drawings and associated calculations to the Engineer for approval.

See also the Instructions for Design Standards (IDS) Index 21900 for examples of applicable information and plan content requirements. Develop and include in the plans package a Modified Special Provision for Specification 471 that deletes the requirements for using QPL listed pile configurations.

Commentary: In this scenario, the Contractor's EOR develops a custom fender system design and pile configurations using QPL listed pile products, the fender system geometry, "Required Freestanding Pile Height" and soils information shown in the plans. The custom fender system design is submitted to the Engineer for approval using the shop drawing process.

F. When a custom fender system design is required due to the condition(s) listed in 3.14.1.D.3.a and the use of other pile types or materials is preferred by the District, fully detail the custom fender system in the plans utilizing the selected pile type. Utilize the standard geometry, wales and dimensional lumber shown on Design Standards Index 21900 as applicable. Include custom Data Tables in the plans based on those used for Design Standards Index 21900 and place the "Required Energy" in the Data Table Notes. Delete from the Data Table Notes the note requiring that a QPL listed fender system configuration be used. See also the Instructions for Design Standards (IDS) Index 21900 for examples of applicable information and plan content requirements. Develop and include in the plans package a Modified Special Provision for Specification 471 that deletes the requirements for using polymeric piles. Develop and include in the specifications package a Modified Special Provision for the piles as required.

Commentary: In this scenario, the EOR develops a custom fender system design and pile configurations using piles other than polymeric piles and includes the complete design in the plans.

G. When a custom fender system design is required due to geometric constraints as specified in 3.14.1.D.3.b, fully detail the custom fender system geometry and list the "Required Energy" in the plans. When using polymeric piling configurations as listed on the QPL, the minimum length of a custom fender system is 32 feet. Utilize the standard

geometry to the maximum extent possible, and the standard piles, wales and dimensional lumber shown on Design Standards Index 21900 or 21930 as appropriate. Include the Data Tables in the plans based on those used for Design Standards Index 21900 or 21930 as appropriate. See the Instructions for Design Standards (IDS) Index 21900 or 21930, as appropriate, for applicable information and plan content requirements. If the fender system length is less than 32 feet and/or the angle breaks between adjacent panels exceed 8 degrees, follow the custom fender system design procedures described in the preceding sections or as directed by the District.

H. Miscellaneous Considerations:

1. The fenders should flare at the same points directly opposite each other measured perpendicular to the centerline of the navigation channel. The minimum distance from the superstructure coping to the beginning of the fender flare is 10 feet.
2. At the discretion of the District, alternate materials may be used for piles or wales when determined by life cycle cost analysis to be more feasible. The use of alternate materials will necessitate a custom design.
3. A Pile Installation Constructability Review must be performed by the Geotechnical Engineer to verify that the pile tips shown in the plans can be reasonably obtained by the Contractor, and the use of any penetration aids (jetting, preforming, etc.) will not jeopardize adjacent structures.
4. Investigate and resolve conflicts between the proposed fender system and existing utilities or structures.
5. Prestressed concrete fender piles generally have a short life expectancy, are considered sacrificial, and no corrosion protection is required beyond the use of concrete class as shown in Table 1.4.3-1.

3.14.3 Polymeric Pile Supplier Engineer's Development Procedure

A. Use the following procedure and the requirements in Specification 471 for developing individual pile configurations for each “Energy Capacity” level intended for listing on the QPL.

B. Develop pile configurations and connection details for fender systems that result in flexible, energy absorbing structures maximizing the efficiency of the proprietary polymeric pile. Use the basic geometry of the fender system, standard connection details if possible, and limitations for pile spacing and pile clusters as shown in Design Standards Index 21900. The minimum designed clear spacing between pile clusters is 30 inches. Include capacities of, and interaction between, the wales and piles in the analysis.

C. Pile configuration drawings submitted for listing on the QPL shall be based on the design methodology listed below and shall include but not be limited to the following:

- Energy Capacity” of the fender system with the applicable pile configuration
- Pile configuration and layout based on and compatible with the standard geometry shown on Design Standards Index 21900

- General notes
- Minimum pile embedment into soils having an N value greater than or equal to 6
- Pile material properties including fill material used for hollow piles (when required by design) and required admixtures
- Pile physical properties, e.g., modulus of elasticity, yield strength, moment of inertia, etc.
- Pile-to-wale and pile-to-pile connection details for pile sections remaining hollow under service conditions and/or if different from those shown on Design Standards Index 21900
- Any supplier required limitations regarding pile installation techniques or other typical construction practices permitted by FDOT construction specifications, e.g., full length pile driving versus jetting/driving combination
- A note for each pile configuration stating: “The pile configuration shown is to be used with Design Standards Index 21900.”

D. Resistance Factors: For piles having a non-ductile failure mode, reduce the flexural resistance of the pile determined in accordance with Specification 471 by 20%. A non-ductile pile is one that has a ductility factor less than 1.25. The ductility factor is defined as the ratio of the ultimate displacement to the yield displacement.

E. Use the following design methodology as:

1. Use the following assumptions in the design of the pile configurations:
   a. “Freestanding Pile Height” = 30 ft.
   b. Soil properties are to be a weak submerged sand with phi = 30 degrees and a subgrade modulus of 20 pounds per cubic inch. These values correspond to a soil having a blow count, N, of approximately 6.
   c. Limit fender system deflection to where the uppermost wale remains above the high water elevation.
   d. Length of fender system = 32 ft. total length minimum (two 16 ft. interior sections) plus any number of additional 16 ft. interior sections as required so as to balance and optimize the design for a given "Energy Capacity" considering the interaction between the piles and wales.
   e. Utilize a straight fender system with no angle break between sections.
   f. Use eight 10" x 10" wales separated by 8" x 8" spacer blocks
2. Design a trial fender system using the assumptions listed above. Use a computer program that allows modeling of cantilevered piles embedded in weak soil while incorporating soil strengths using P-Y curves and that allows modeling of pile-to-wale interaction, e.g., FB-MultiPier. Consider both wale and pile moment capacities to determine magnitude(s) and location(s) of the critical load(s). Create multiple load cases applying incrementally increasing lateral static load(s) located between and directly at the pile clusters. Apply the concentrated load(s) for each load case within 8 ft. of the center of the fender model. These loads may be equally distributed between the two uppermost wales. Develop a force versus

displacement diagram from the analysis, then compute the energy based on the area under the curve. This area represents the fender system's potential energy available to redirect or possibly bring an errant vessel to rest. Report the minimum calculated “Energy Capacity” from the multiple load cases as the “Energy Capacity” for the subject pile configuration.

Commentary: In FB-MultiPier, select "Gross Properties" for the Section Type and "Linear" for the behavior of the main structural members. By selecting these choices, the P-Delta effects will be ignored; therefore, the resulting displacements will be due to the applied load only. When using other software packages to model the fender system, select the comparable settings as appropriate for that software so as to emulate the settings described above for an FB-MultiPier analysis.

3. Determine the Safe Embedment (E_f) as follows:

   To verify stability, use a computer program that allows non-linear modeling of a single cantilever pile embedded in weak soil (N=6) while incorporating soil strengths using P-Y curves, e.g., FB-MultiPier, LPILE. Load the top of the pile with a transverse load that generates the pile’s ultimate moment. Raise the pile tip elevation until pile deflections, especially at the pile tip, become unreasonable or the program does not converge. Assume the unstable embedment (E_o) is one foot greater than the embedment that causes unreasonable deflections. Add an additional embedment of 5 feet or 20% of the unstable embedment (E_o), whichever is greater, to E_o to determine the safe embedment (E_f). E_f shall in no case be taken less than 10 feet.

4. Perform a constructability review including manufacturing, transportation and installation.

3.14.4 Ladders and Platforms

A. Contact the District Structures Maintenance Engineer for ladder, platform, and catwalk requirements.

B. Generally, where fender lighting maintenance access is not provided or possible by boat, provide ladders and platforms from the bridge to the fender catwalk.

C. Design ladders and platforms per ***OSHA*** and the ***Code of Federal Regulations (CFR) Title 29, Part 1910, Section 27***. The clearance between rungs and obstructions should be 12-inches but not less than 7-inches (OSHA minimum.)

3.14.5 Navigation Lighting Details

A. Bridges over waterways with no significant nighttime navigation may be exempted from lighting requirements by the proper authorities; however, most bridges over navigable waterways will require some type of lighting. Refer to ***Code of Federal Regulations (CFR) Title 33 Part 118***.

B. For navigation lighting requirements, see the ***USCG Bridge Lighting and Other Signals Manual***.

3.15 CONCRETE BOX AND THREE-SIDED CULVERT DESIGN

3.15.1 General

Use ***PPM*** Volume 1, Chapter 33 for culvert plans preparation in conjunction with the design requirements of this Section. Refer to ***SDG*** Chapter 1 for the box culvert concrete class (Table 1.4.3-1) and reinforcing steel (Table 1.4.2-1) cover requirements.

3.15.2 Design Method (Rev. 01/12)

Design new reinforced concrete culverts and extensions to existing culverts (precast or cast-in-place, four-sided or three-sided) subjected to either earth fill and/or highway vehicle loading in accordance with ***LRFD***.

Investigate the need for culvert barrel weep holes to relieve uplift pressure. When culvert barrel weep holes are determined to be necessary, show the requirement in the plans. Typical weep hole size, location, and filter materials used to intercept the flow and prevent formation of piping channels is found in Specification 400 and 410.

3.15.3 Load Modifiers and Load Factors [3.4.1] [12.5.4]

A. The product of the load modifiers and maximum load factors $[(\eta) \times (\gamma)]$ for Strength Limit States shall be equal to:

   1. Box Culverts (four-sided)

      1.05 x 1.30 = 1.365 for Vertical Earth Pressure (EV)
      1.05 x 1.35 = 1.418 for Horizontal Earth Pressures (EH)

   2. Three-Sided Culverts

      1.05 x 1.35 = 1.418 for Horizontal and Vertical Earth Pressure (EV and EH)

B. Use 1.00 as the load modifiers (η) for horizontal loads when investigating the minimum horizontal earth pressure effects in accordance with ***LRFD*** [3.11.7], and combined with the maximum load factors for Strength Limit State investigation.

C. Use 1.00 as the load modifier (η) for all other Limit States and Load Types including construction load investigation.

3.15.4 Dead Loads and Earth Pressure [3.5] [3.11.5] [3.11.7]

A. The dead load on the top slab consists of the pavement, soil, and the concrete slab. For simplicity in design, the pavement may be assumed to be soil.

B. Use the following design criteria in determining dead load and earth pressures:

   Soil = 120 pcf
   Concrete = 150 pcf
   Horizontal earth pressure (At-Rest) for:

      Maximum load effects = 60 pcf, (assumes soil internal friction angle = 30°)
      Minimum load effects = 30 pcf, (50% of maximum load effects)

C. Modify vertical earth pressures in accordance with ***LRFD*** [12.11.2.2.1], Modification of Earth Loads for Soil Structure Interaction (Embankment Installations) for both box and three-sided culverts.

3.15.5 Live Load

Design reinforced concrete culverts for HL-93. Lane loading is required for the design of culverts with spans greater than 15 feet in lieu of the exemption in ***LRFD*** [3.6.1.3.3].

*Commentary: Concurrent lane loading is necessary for **LRFD** designs because the SU4 Florida Legal Load produces greater flexural moments then HL-93 without lane loading for spans exceeding 18 feet.*

3.15.6 Wall Thickness Requirements

A. Determine the exterior wall thickness for concrete culverts based on the design requirements, except that the following minimum thickness requirements have been established to allow for a better distribution of negative moments and corner reinforcement:

CLEAR SPAN	MINIMUM EXTERIOR WALL THICKNESS
< 8 ft.	7-inch (Precast); 8-inch. (C.I.P.)
8 ft. to < 14 ft.	8-inch
14 ft. to < 20 ft.	10-inch
20 ft. and greater	12- inch

B. The interior wall thickness in multi-cell culverts must not be less than 7-inches for precast culverts and 8-inches for cast-in-place culverts.

C. Increase the minimum wall thickness by one inch for concrete culverts in extremely aggressive environments (3-inch concrete cover).

3.15.7 Concrete Strength and Class

Design reinforced concrete culverts for the following concrete strengths in accordance with the ***SDG*** Chapter 1:

Precast:

f'c = 5,000 psi (Class II modified, or Class III) in Slightly Aggressive Environments

f'c = 5,500 psi (Class IV) in Moderately and Extremely Aggressive Environments

Cast-in-place:

f'c = 3,400 psi (Class II) in Slightly Aggressive Environments

f'c = 5,500 psi (Class IV) in Moderately and Extremely Aggressive Environments

3.15.8 Reinforcement

A. Reinforcement may be deformed bars, smooth welded wire reinforcement, or deformed welded wire reinforcement. Use a yield strength of 60 ksi for deformed bar reinforcement and 65 ksi for welded wire reinforcement.

B. For the maximum service load stress in the design of reinforcement for crack control, comply with ***LRFD*** [12.11.3] using the following exposure factors for ***LRFD*** [5.7.3.4]:

   γ_e = 1.00 (Class 1) for inside face reinforcement in slightly to moderately aggressive environments, and extremely aggressive environments where a minimum 3 inches of concrete cover is provided;

   γ_e = 0.75 (Class 2) for outside face reinforcement in all environments.

C. Investigation of fatigue in accordance with ***LRFD*** [5.5.3.2] is not required for reinforced concrete box culverts.

Commentary: AASHTO voted to exclude box culverts from fatigue design at the May 2008 meeting.

D. Provide minimum reinforcement in accordance with ***LRFD*** [5.7.3.3.2] for cast-in-place culverts and simple span top slabs of precast culverts, and ***LRFD*** [12.11.4.3.2 and 12.14.5.8] for precast culverts. Additionally, for precast culverts with earth fill cover equal to or greater than 2 feet:

   1. Where reinforcement is distributed on both inside and outside faces, the ratio of minimum reinforcement area to gross concrete area may be reduced to 0.001, but not less than the area of reinforcement required to satisfy 1.33 times the factored flexural moment for reinforcement ratios less than 0.002.

   2. Walls or slabs with a thickness equal to or less than 13 inches may contain only a single layer of reinforcement, located at the tension face when the opposite face is permanently in compression and in contact with the soil.

E. Provide distribution reinforcement as described in ***LRFD*** [9.7.3.2], transverse to the main flexural reinforcement in both the top and bottom slabs of reinforced concrete box culverts for earth fill cover heights less than two feet as follows:

   1. For skews ≤ 60°, provide the amount of distribution reinforcement required in ***LRFD*** [9.7.3.2] first equation.

   2. For skews > 60°, provide the amount of distribution reinforcement required in ***LRFD*** [9.7.3.2] second equation.

F. Do not use shear reinforcement in concrete culverts. Design slab and wall thickness concrete shear capacity in accordance with ***LRFD*** [5.8] and [5.14.5.3].

3.15.9 Reinforcement Details

A. Design the main reinforcement in the top and bottom slabs perpendicular to the sidewalls in cast-in-place culverts and non-skewed units of precast culverts. For reinforcement requirements of skewed precast culverts, see ***SDG*** 3.15.10.

B. The minimum inside bend diameter for negative moment reinforcement (outside corners of top and bottom slabs) must satisfy the requirements of ***LRFD*** [5.10.2.3] and be not less than 4.0 db for welded wire reinforcement.

C. Top and bottom slab transverse reinforcement must be full-length bars, unless spliced to top and bottom corner reinforcement.

3.15.10 Skewed Culverts

A. Design and detail skewed precast concrete culverts with non-skewed interior units designed for the clear span perpendicular to the sidewalls and skewed end units designed for the skewed clear span.

B. For a cast-in-place concrete box culvert with a skewed end, the top and bottom slab reinforcement will be "cut" to length to fit the skewed ends. The "cut" transverse bars have the support of only one culvert sidewall and must be supported at the other end by edge beams (headwall or cutoff wall). See ***Design Standards*** Index 289 for layout details.

Commentary: Precast concrete culverts with skewed ends usually cannot use edge beams as stiffening members because of forming restrictions. The transverse reinforcement must be splayed to fit the geometry of the skew. This splaying of the reinforcement will increase the length of the transverse bars and, more importantly, the design span of the end unit. For small skews, the splayed reinforcement is usually more than adequate. However, large skews will require more reinforcement and may require an increased slab thickness or integral headwalls.

3.15.11 Deflection Limitations [2.5.2.6.2]

Ensure that top slab deflection due to the live load plus impact does not exceed 1/800 of the design span. For culverts located in urban areas used in part by pedestrians, this deflection must not exceed 1/1000 of the design span. Determine deflections in accordance with ***LRFD*** [2.5.2.6.2]. Gross section properties may be utilized.

3.15.12 Analysis and Foundation Boundary Conditions

A. Analyze culverts using elastic methods and model the cross section as a plane frame (2D) using gross section properties.

B. For box culverts restrain the bottom slab by any of the following methods:

   1. Fully pinned support at one corner and pin-roller support at the opposite corner;

2. Vertical springs (linear-elastic or non-linear soil springs) at a minimum of tenth points and a horizontal restraint at one corner;
3. Beam on elastic foundation and a horizontal restraint at one corner.
   Obtain the modulus of subgrade reaction from the Geotechnical Engineer when performing the more refined analyses in 2. and 3.

C. Three-sided culverts on spread footings shall be designed at critical sections for the governing case of either, a fully pinned support condition and a pin-roller support condition. A refined analysis of the pin-roller support condition is permitted if soil springs (linear-elastic or non-linear) are substituted for the horizontal supports allowing for one inch movement at the maximum horizontal reaction for the governing factored load case.

Commentary: Designers of three-sided culverts typically compute moments, shears, and thrusts based on fully pinned support conditions that are able to resist horizontal forces and prevent horizontal displacements. These boundary conditions may not be appropriate for most foundations in Florida. Fully pinned support conditions could be used if site and construction conditions are able to prevent any horizontal displacement of frame leg supports. Such a condition may exist if footings are on rock or pile supported, and frame legs are keyed into footings with adequate details and construction methods.

3.15.13 Span-to-Rise Ratios

Span-to-rise ratios that exceed 4-to-1 are not recommended. As span-to-rise ratios approach 4-to-1, frame moment distribution is more sensitive to support conditions, and positive moments at midspan can significantly exceed computed values even with relatively small horizontal displacement of frame leg supports. If it is necessary to use a three-sided frame with a span-to-rise ratio in excess of 4-to-1, the structure must be analyzed for midspan positive moment using pin-roller support conditions.

3.15.14 Load Rating Requirements

A. Load rate bridge-size culverts (see definition in ***PPM*** Volume 1, Chapter 33,) in accordance with ***SDG*** Chapter 1. Calculations must be signed and sealed by a professional engineer currently approved to perform Minor Bridge Design under Rule 14-75 of the Florida Administrative Code.

B. Cast-in-place culverts load ratings must be performed by the licensed professional engineer designer. Show the load rating summary in the Contract Plans. Precast culverts must be load rated by the Contractor's Engineer of Record (see definition in the ***Specifications*** Section 1-3) and the load rating shown on the approved shop drawings, unless otherwise provided on the ***Design Standards***, Index 292.

3.16 SOUND BARRIER DESIGN (Rev. 01/12)

3.16.1 Scope [15.1]

Add the following to ***LRFD*** [15.1]:

Use the general requirements of ***PPM*** Volume 1, Chapter 32 in conjunction with the structural design requirements of ***LRFD*** as modified by the FDOT ***Structures Design Guidelines***.

3.16.2 General Features - Panel Height [15.4] and Post Spacing

Post spacing shall be a minimum of 10 feet and a maximum of 20 feet.

Add the following section to ***LRFD*** [15.4]:

All concrete wall panels shall be a minimum of 6 feet high. Bottom panels shall be a minimum of 8 feet high when emergency access is required.

Commentary: The minimum bottom panel height of 6'-0" was chosen to clear required fire hose access holes.The minimum bottom panel height of 8'-0" for Sound Barriers requiring emergency access was chosen to allow forming and installation of 6'-0" high doors.

3.16.3 General Features - Concrete Strength and Class [15.4]

Add the following section to ***LRFD*** [15.4]:

All concrete Sound Barrier components shall be Class IV as defined in ***Specification*** Section 346. The concrete cover on all reinforced and prestressed concrete designs shall be a minimum of 2-inches.

3.16.4 Wind Loads [3.8.1][15.8.2]

For ground mounted sound barrier design, replace ***LRFD*** [15.8.2] in its entirety with ***SDG*** 2.4.1.

For sound barriers located on embankments and structures, the height zone shall be determined by using the elevation of adjoining ground as being the approximate elevation of the original ground surface prior to embankment construction.

For sound barrier panel design, assume a minimum wind load pressure of 52 psf.

3.16.5 Vehicular Collision Forces [15.8.5]

In ***LRFD*** [15.8.5], replace paragraphs 4 thru 9 with the following:

On flush shoulder roadways, locate sound barriers outside the clear zone unless shielded, and as close as practical to the right-of-way line. On urban curbed roadways, the front face of the sound barrier posts shall be a minimum of 4 feet behind the face of the curb. Additional setbacks may be required to meet minimum sidewalk requirements. Sound barriers may be combined with traffic railings on a common foundation if the

combination meets the crash test requirements of ***NCHRP 350*** or the ***Manual for Assessing Safety Hardware (MASH)*** Test Level 4 criteria.

Sound barriers should not be located on bridge structures where feasible alternative locations exist. Sound barriers on bridge structures cause a disproportionate increase in bridge cost because of strengthening of the deck overhang and exterior girder. In addition, sound barriers on bridges interfere with normal maintenance inspection access and detract from the aesthetic quality of the structure. See ***Design Standards***, Index 5210 and 5212 for acceptable crash tested 8 ft. bridge and retaining wall mounted sound barriers.

3.16.6 Foundation Design [15.9]

Add the following to ***LRFD*** [15.9.1]:

In lieu of site specific geotechnical information, foundations for ground mounted sound barriers shall be designed assuming one of the following soil conditions:

Medium Dense Granular Soil (Type 1) Standard Penetration Test (SPT) N Values between 10 and 40

- Effective Soil Unit Weight = 50 pcf
- Internal Friction Angle = 30°
- Cohesion = 0 psf

Loose Granular Soil (Type 2) SPT N values between 4 and 9

- Effective Soil Unit Weight = 40 pcf
- Internal Friction Angle = 28°
- Cohesion = 0 psf

Increase auger cast pile foundation diameters to 36 or 42 inches when depths exceed 30 feet. Additional auger cast pile design information can be found the ***Soils and Foundations Handbook***, Appendix B.

Commentary: Loose granular soils were added for use in rare instances when the soils do not meet the conservative soil properties of the medium dense granular soil.

3.16.7 Resistance Factors [15.9.5]

For single auger cast piles or drilled shafts, use a horizontal geotechnical resistance factor of 0.6 for the design of sound barrier foundations in lieu of the horizontal geotechnical resistance factors given in LRFD Table 10.5.5.2.3-1 (driven pile foundations) and Table 10.5.5.2.4-1 (drilled shaft foundations).

Commentary: Using the Broms method to establish the foundation depth required to resist overturning, a Strength III Load Factor of 1.4 combined with a horizontal geotechnical resistance factor of 0.6 gives an overall safety factor of 2.33 which is comparable to the safety factor used in service load design.

3.16.8 Lateral Earth Pressures [3.11.5.10]

In the first and second sentence of ***LRFD*** [3.11.5.10], change "may be used" to "shall be used".

4 SUPERSTRUCTURE - CONCRETE

4.1 GENERAL

This Chapter contains information related to the design, reinforcing, detailing, and construction of concrete components. It also contains deviations from ***LRFD*** that are required in such areas as deck slab reinforcing and construction, pretensioned concrete components, and post-tensioning design and detailing.

4.1.1 Concrete Cover

See Table 1.4.2-1 Minimum Concrete Cover in ***SDG*** 1.4 Concrete and Environment.

4.1.2 Reinforcing Steel [5.4.3]

See ***SDG*** 1.4.1 for Reinforcing Steel requirements.

4.1.3 Girder Transportation (Rev. 01/12)

The EOR is responsible for investigating the feasibility of transportation of heavy, long and/or deep girders. In general, the EOR should consider the following during the design phase:

A. Whether or not multiple routes exist between the bridge site and a major transportation facility.

B. That the transportation of girders longer than 145 feet or weighing more than 160,000 pounds requires coordination through the Department's Permit Office during the design phase of the project. Shorter and/or lighter girders may be required if access to the bridge site is limited by roadway(s) with sharp horizontal curvature or weight restrictions.

C. Routes shall be investigated for obstructions for girder depths exceeding 9’-0”, or if posted height restrictions exist on the route.

Commentary: Length of travel significantly increases the difficulty to transport girders. Alternative transportation should be considered as well for heavy, long and/or deep girders. Please note that transportation of girders weighing more than 160,000 pounds may require analysis by a Specialty Engineer, bridge strengthening, or other unique measures.

When the use of heavy, long and/or deep girders is being evaluated and transportation of the girders over land is required, contact at least one prestressed girder manufacturer and ask for their input regarding girder transportation. At least one combination of viable casting location and transportation route is required.

4.1.4 Shear Design [5.8.3]

When calculating the shear capacity, use the area of stirrup reinforcement intersected by the distance $\mathbf{0.5d_v}\cot\theta$ on each side of the design section, as shown in ***LRFD*** [Figure C5.8.3.2-3].

4.1.5 Minimum Reinforcement Requirements [5.7.3.3.2]

A. Apply the minimum reinforcement requirements of ***LRFD*** [5.7.3.3.2] to all sections being analyzed except at the ends of simply supported bridge girders.

B. The length of the girder from the simply supported end for which the minimum reinforcement will not be checked is defined below.

   1. Do not check the minimum reinforcing for prestressed concrete girders for a distance equal to the bonded development length (e.g. for 270 ksi strand with f_{pe} = 157 ksi, 1/2" dia, strand yields 11.0 feet and 0.6" dia. yields 13.2 feet) from the ends of the simply supported girder.

   2. Do not check the minimum reinforcing for reinforced concrete girders for a distance equal to 2.5 times the superstructure depth from the centerline of bearing of the simply supported end.

C. For span lengths less than 27 feet for simple span bridges, check the minimum reinforcement at mid-span.

Commentary: The use of a minimum reinforcement check was developed to ensure a ductile failure mode for lightly reinforced deep beams. Bridge girders are slender and do not generally meet the definition of a deep beam. Deep beams are defined as members having a clear span less than 4 times the overall depth (as defined by ACI 318). The use of the minimum reinforcing check has evolved in the specifications from checking the critical section to checking every section. This evaluation at every section is justified in buildings where heavy concentrated loads may be present near supports. In bridges, this condition does not exist and the critical section for bending is not near the support for simply supported bridge beams. The ends of simply supported bridge girders are dominated by shear, not bending moment. At these locations it is unnecessary to check minimum reinforcing for bending in an area dominated by shear.

4.1.6 Dapped Beam Ends

Dapped beam ends are not permitted.

4.1.7 Continuity of Precast Beams (Rev. 01/12)

Use only post-tensioning to splice beam segments within simple spans and/or to establish continuity between adjacent spans.

4.1.8 Crack Control (Rev. 01/12)

In ***LRFD*** [5.7.3.4], use Class 1 exposure condition for all location/components not requiring a Class 2 exposure condition. Any concrete cover thickness greater than the minimum required by Table 1.4.2-1 may be neglected when calculating dc and h, if a Class 2 exposure condition is used. See ***SDG*** 1.4.4 for Mass Concrete requirements.

4.2 DECK SLABS [5.13.1][9.7]

4.2.1 Bridge Length Definitions

For establishing profilograph and deck thickness requirements, bridge structures are defined as Short Bridges or Long Bridges. The determining length is the length of the bridge structure measured along the Profile Grade Line (PGL) from front face of backwall at Begin Bridge to front face of backwall at End Bridge of the structure. Based upon this established length, the following definitions apply:

A. Short Bridges: Bridge structures less than or equal to 100 feet in PGL length.

B. Long Bridges: Bridge structures more than 100 feet in PGL length.

4.2.2 Deck Thickness Determination (Rev. 01/12)

A. For new construction of "Long Bridges" except pedestrian bridges and moveable spans, the minimum thickness of bridge decks cast-in-place (CIP) on beams or girders is 8½-inches. The 8½-inch deck thickness includes a 2 1/2-inch cover on the top of the deck, the top one-half inch of which is a sacrificial thickness. The upper one-quarter inch of this sacrificial thickness will be planed-off per Specification 400; consider this as a temporary dead load that will be removed. The lower one-quarter inch of the sacrificial deck thickness may or may not be planed-off per Specification 400; include this as a long-term permanent dead load. Except for post-tensioned structures, omit the entire ½-inch sacrificial thickness from the superstructure section properties. For post-tensioned structures, design for the worst case using section properties with and without the ½-inch sacrificial thickness in place.

B. For new construction of "Short Bridges", the minimum thickness of bridge decks cast-in-place (CIP) on beams or girders is 8-inches.

C. For "Major Widenings," (see criteria in ***SDG*** Chapter 7) the thickness of CIP bridge decks on beams or girders is 8-inches. However, whenever a Major Widening is selected by the Department to meet profilograph requirements, a minimum deck thickness of 8½-inches to meet the requirements and design methodology for new construction of the preceding paragraph, must be used.

D. The thickness of CIP bridge decks on beams or girders for minor widenings or for deck rehabilitations will be determined on an individual basis but generally will match the thickness of the adjoining existing deck.

E. For pedestrian bridges regardless of length, the minimum thickness of bridge decks is 6-inches with no allowance for a one-half inch sacrificial thickness.

F. For bascule spans regardless of length, provide a minimum concrete deck cover of 2-inches with no allowance for a one-half inch sacrificial thickness.

G. The thickness of all other CIP or precast concrete bridge decks is based upon the reinforcing cover requirements of ***SDG*** Table 1.4.2-1.

H. Establish bearing elevations by deducting the determined thickness before planing, from the Finish Grade Elevations required by the Contract Drawings.

4.2.3 Grooving Bridge Decks

A. For new construction utilizing C-I-P bridge deck (floors) that will not be surfaced with asphaltic concrete, include the following item(s) as appropriate in the Summary of Pay Items:

Item No. 400-7 - Bridge Floor Grooving	XX Sq. Yards
Item No. 400-9 - Bridge Floor Grooving and Planing	XX Sq. Yards

Use Item No. 400-7 - Bridge Floor Grooving for short bridges and Item No. 400-9 - Bridge Floor Grooving and Planing for long bridges.

B. Quantity Determination: Determine the quantity of bridge floor grooving in accordance with the provisions of Article 400-22 of the ***Specifications***.

4.2.4 Deck Slab Design [9.7.2][9.7.3]

A. Empirical Design Method: The empirical design method per ***LRFD*** [9.7.2.4] is not permitted.

*Commentary: The empirical design method is not permitted because of the potential for future widening or phased construction and associated traffic control impacts in order to comply with **LRFD** [9.7.2.4].*

B. Traditional Design Method: Design all bridges using the Traditional Design method of ***LRFD*** [9.7.3]. For the deck overhang design and median barriers, the following minimum transverse top slab reinforcing ($\mathbf{A_s}$), may be provided (without further analysis) where the indicated minimum slab depths are provided and the total deck overhang is 6 feet or less. However, for 8-inch thick decks with eight-foot sound wall traffic railings the deck overhang is limited to 18-inches beyond the outer edge of the top flange of the exterior beam. The extra slab depth for deck grinding is not included.

Traffic Railing Barrier (Test Level)	Slab Depth	A_s/ft (sq in)
32-inch F-Shape (TL-4)	8-inches	0.8
32-inch Vertical Face (TL-4)	8-inches	0.8
32-inch Corral Shape (TL-4)	8-inches	0.8
32-inch F-Shape Median (TL-4)	8-inches	0.40[1]
8'-0" Sound Barrier (TL-4)	8-inches	0.93[2]
8'-0" Sound Barrier (TL-4)	10-inches	0.66[2]
42-inch F-Shape (TL-5)	10-inches	0.75
42-inch Vertical Face (TL-4)	8-inches (with 6-inch sidewalk)	0.40[3] (0.40)

1. Minimum reinforcing required in both top and bottom of slab. Less reinforcing may be provided in the bottom, provided the sum of the top and bottom reinforcing is not less than 0.80 square inch per foot.

2. For the eight foot sound wall, the area of top slab reinforcing 6 feet each side of deck expansion joints must be increased by 30% to provide a minimum 1.21 square inches per foot for an 8-inch thick slab and 0.86 square inches per foot for a 10-inch thick slab. Evaluate the development length of this additional reinforcing and detail hooked ends for all bars when necessary.
3. Minimum reinforcing based on the 42-inch vertical face traffic railing mounted on a 6-inch thick sidewalk above an 8-inch deck with 2-inch cover to the top reinforcing in both the deck and sidewalk. Specify No. 4 Bars at 6-inch spacing placed transversely in the top of the raised sidewalk.

For traffic railings located inside the exterior beam (other than median barriers), the minimum transverse reinforcing in the top of the slab may be reduced by 40% provided the bottom reinforcing is not less than the top reinforcing.

If the above reinforcing is less than or equal to twice the nominal slab reinforcing, the extra reinforcing must be cut-off 12-inches beyond the midpoint between the two exterior beams. If the above reinforcing is greater than twice the nominal slab reinforcing, then half of the extra reinforcing or up to 1/3 the total reinforcing must be cut-off midway between the two exterior beams. The remaining extra reinforcing must be cut off at 3/4 of the two exterior beam spacing, but not closer than 2 feet from the first cut-off.

4.2.5 Traffic Railing Design Requirements

A. In lieu of the Traditional Design Method shown above, the following design values may be used to design the top transverse slab reinforcing, for the types listed:

Traffic Railing Type (Test Level)	M_c	T_u	L_d
32-inch Corral Shape (TL-4)	15.7	7.1	7.67
32-inch F-Shape (TL-4)	15.7	7.1	7.67
32-inch Vertical Face (TL-4)	16.9	7.1	7.67
32-inch Median (TL-4)	15.3	3.5	7.67
8-foot Sound Barrier (TL-4)	20.1[1]	5.9[1]	21
42-inch F-Shape (TL-5)	20.6	9	13.75
42-inch Vertical Face (TL-4)	25.8	10.6	12.5

1. For the 8-foot sound wall, increase the ultimate slab moment and tensile force by 30% for a distance of 6 feet each side of all deck expansion joints, except on approach slabs.

Where:

M_c = Ultimate slab moment at the traffic railing face (gutter line) from traffic railing impact (kip-ft/ft).

T_u = Ultimate tensile force to be resisted (kips/ft.).

L_d = Distribution length (ft.) along the base of the traffic railing at the gutter line near a traffic railing open joint (**L_c** + traffic railing height).

The following relationship must be satisfied:

$$(T_u/\phi P_n) + (M_u/\phi M_n) \leq 1.0$$

for which:

$$P_n = A_s f_y$$

Where:

$\phi = 1.0$

P_n = Nominal tensile capacity of the deck (kips/ft.).

A_s = Area of transverse reinforcing steel in the top of the deck (sq. in.)

f_y = The reinforcing steel yield strength (ksi).

M_u = Total ultimate deck moment from traffic railing impact and factored dead load at the gutter line.
$(M_c + 1.00*M_{Dead\ Load})$ (kips-ft/ft).

M_n = Nominal moment capacity at the gutter line determined by traditional rational methods for reinforced concrete (kips-ft/ft).

B. For locations inside the gutter line, these forces may be distributed over a longer length of $L_d + 2D(\tan 45°)$ feet. Where "**D**" equals the distance from the gutter line to the critical slab section. At open transverse deck joints, use half of the increased distribution length $D(\tan 45°)$.

C. For flat slab bridges the transverse moment due to the traffic railing dead load may be neglected. The area of transverse top slab reinforcing determined by analysis, for flat slab bridges with edge traffic railings must not be less than 0.30 sq in/ft within 4 feet of the gutter line for any TL-4 traffic railing or 0.40 sq in/ft within 10 feet of the gutter line for any TL-5 railing.

D. When more than 50% of the total transverse reinforcing must be cut off, a minimum of 2 feet must separate the cut-off locations.

E. For traffic railings located inside the exterior beam, or greater than 5 feet from the edge of flat slab bridges, the designer may assume that only 60% of the ultimate slab moment and tensile force are transferred to the deck slab on either side of the traffic railing.

4.2.6 Reinforcing Steel over Intermediate Piers or Bents

A. When CIP slabs are made composite with simple span concrete beams, and are cast continuous over intermediate piers or bents, provide supplemental longitudinal reinforcing in the tops of slabs.

B. Size, space, and place reinforcing in accordance with the following criteria:
   1. No. 5 Bars placed between the continuous, longitudinal reinforcing bars.
   2. A minimum of 35 feet in length or 2/3 of the average span length whichever is less.
   3. Placed symmetrically about the centerline of the pier or bent, with alternating bars staggered 5 feet.

4.2.7 Minimum Negative Flexure Slab Reinforcement [6.10.1.7]

Any location where the top of the slab is in tension under any combination of dead load and live load is considered a negative flexural region.

*Commentary: See **SDG** Chapter 7 for additional slab reinforcing requirements.*

4.2.8 Crack Control in Continuous Decks [5.10.8]

A. To minimize shrinkage and deflection cracking in cast-in-place decks, develop a designated deck casting sequence for continuous flat slab and beam/girder superstructures and simple span beam/girder superstructures with continuous decks. Indicate on the plans the sequence and direction of each deck pour so as to minimize cracking in the freshly poured concrete and previously cast sections of deck. Provide construction joints as required to limit the volume of concrete cast in a given pour to between 200 cy and 400 cy.

B. For simple span and continuous steel beam/girder superstructures, develop camber diagrams taking into consideration the deck casting sequence and the effect on the changing cross section characteristics of the superstructure. For continuous superstructures, the sequence should result in construction joints spaced approximately at locations of the points of dead load moment contraflexure. On continuous superstructures, check longitudinal tension stresses in previously cast sections of deck during deck casting sequence per ***LRFD*** [6.10.3.2.4]. State on the plans that a minimum of 72 hours is required between pours in a given continuous unit. When developing casting sequences and camber diagrams, use the appropriate concrete strength based on the day the structure is being analyzed. Use the following values to approximate the concrete strength gain (use interpolation to obtain other values). See also ***SDG*** 5.2.

Table 4.2.8-1 Deck Concrete Strength Gain Values

Day	Class II (Bridge Deck) (psi)	Class IV (psi)
3	2740	3720
6	3180	4210
9	3610	4340
12	3840	4550
15	4020	4820
18	4160	5040
21	4290	5220
24	4390	5390
27	4500	5500

Commentary: Generally for continuous steel girder superstructures, all of the positive moment sections of the deck are cast first, followed by the negative moment sections.

C. For continuous concrete beam/girder superstructures, develop build-up diagrams taking into consideration the deck casting sequence, time dependent effects, and the effect on the changing cross section characteristics of the superstructure. The

sequence should result in construction joints spaced approximately at locations of the points of dead load moment contraflexure. State on the plans that a minimum of 72 hours is required between pours in a given continuous unit. Use the appropriate values from Table 4.2.8-1 above and the project specific beam concrete strengths for the time dependent analysis.

Commentary: Generally for continuous concrete beam/girder superstructures, all of the positive moment sections of the deck are cast first, followed by the negative moment sections.

D. For simple span concrete beam/girders with continuous decks, locate construction joints at the ends of the spans and at intermediate locations as required. Include the alternate detail showing the deck continuously cast over intermediate supports with tooled joints in lieu of construction joints. After placement of the first unit, begin succeeding placements at the end away from and proceed toward the previously placed unit. State on the plans that a minimum of 72 hours is required between adjacent pours in a given continuous unit.

E. For simple and continuous flat slab superstructures, develop camber diagrams indicating the deflection of the spans due to self weight of the deck and railings. For continuous flat slab superstructures, show construction joints at most one-quarter and/or three-quarter points in the spans. After placement of the first unit, begin succeeding placements at the end away from and proceed toward the previously placed unit. State on the plans that a minimum of 72 hours is required between adjacent pours in a given continuous unit.

Commentary: For flat slab superstructures, the Contractor is responsible for determining the deflection of the formwork due to the weight of the wet deck concrete, screed and other construction loads.

F. For all superstructure types listed above, state on the plans that the casting sequence may not be changed unless the Contractor's Specialty Engineer performs a new structural analysis, and new camber diagrams are calculated.

G. Units composed of simple span steel girders with continuous decks are not allowed due to the flexibility of the girders.

Commentary: Casting sequences and the location of the construction joints should be sized so that the concrete can be placed and finished while the concrete is in a plastic state and within an 8 hour work shift. A reasonable limit on the size of a superstructure casting is 200 cy to 400 cy. For small projects, the 200 cy per day production rate is a reasonable upper casting limit. For larger projects, the 400 cy per day maximum casting volume may be more reasonable. Plan the location of construction joints so the concrete can be placed using a pumping rate of 60 cy/hr for each concrete pumping machine. Site specific constraints (i.e. lane closure restrictions, etc.) should be taken into account when determining the size of a deck casting and/or location of construction joints.

4.2.9 Concrete Decks on Continuous Steel Girders

For longitudinal reinforcing steel within the negative moment regions of continuous, composite steel girder superstructures, comply with the requirements of ***LRFD*** [6.10.1.7].

4.2.10 Skewed Decks [9.7.1.3]

A. Reinforcing Placement when the Slab Skew is 15 Degrees or less:

   Place the transverse reinforcement parallel to the skew for the entire length of the slab.

B. Reinforcing Placement when the Slab Skew is more than 15 Degrees:

   Place the required transverse reinforcement perpendicular to the centerline of span. Since the typical required transverse reinforcement cannot be placed full-width in the triangular shaped portions of the ends of the slab at open joints, the required amount of longitudinal reinforcing must be doubled for a distance along the span equal to the beam spacing for the full width of the deck. For all bridges, except those with a thickened slab end as used with Florida-I beam simple span structures, three No. 5 Bars at 6-inch spacing, full-width, must be placed parallel to the end skew in the top mat of each end of the slab.

C. Regardless of the angle of skew, the traffic railing reinforcement cast into the slab need not be skewed.

4.2.11 Temperature and Shrinkage Reinforcement

For all cast in place decks, design temperature and shrinkage reinforcement per ***LRFD*** [5.10.8] except do not exceed 12-inch spacing and the minimum bar size is No 4.

4.2.12 Stay-in-Place Forms

A. Clearly state in the "General Notes" for each bridge project, whether or not stay-in-place forms are permitted for the project and how the design was modified for their use; e.g., dead load allowance.

B. Design and detail for the use of stay-in-place metal forms, where permitted, for all beam and girder superstructures (except segmental box girder superstructures) in all environments.

Commentary: Effective with the January 2009 Workbook, per ***Specification*** *Section 400, polymer laminated non-cellular SIP metal forms will be permitted for forming bridge decks of superstructures with moderately or extremely aggressive environmental classifications.*

C. Precast, reinforced concrete, stay-in-place forms may be used for all environmental classifications; however, the bridge plans must be specifically designed, detailed and prepared for their use.

D. Composite stay-in-place forms are not permitted.

4.2.13 Thickened Slab End Requirements

For pretensioned simple span Florida-I Beam bridges, design thickened slab end at locations of slab discontinuity not supported by full depth diaphragms. See ***SDM*** Chapter 15 for thickened slab end details. Do not thicken slab at intermediate supports within a Florida-I Beam simple span unit where the deck slab is continuous.

4.2.14 Phase Constructed Decks (Rev. 01/12)

For decks constructed in phases and on bridge widenings, live load on the existing or previously constructed portions of the superstructure can induce vibration and deflection into the newly constructed portion of the superstructure. Evaluate these live load induced effects on deck casting and curing and minimize them where possible.

Commentary: Where possible, live load should be shifted away from newly constructed portions of the deck during casting and curing operations so as to minimize or eliminate deflection and vibration effects. This can be a significant issue on long span or flexible superstructures, especially steel superstructures. Coordinate with the Traffic Control Plans.

4.3 PRETENSIONED BEAMS

4.3.1 General

The Florida-I Beams are the Department's standard prestressed concrete I-shaped beams and will be used in the design of all new bridges and bridge widenings with I-shaped beams as applicable. AASHTO Beams and Florida Bulb-T Beams will not be used in new designs or widenings.

A. Use ASTM A416, Grade 270, low-relaxation, prestressing strands for the design of prestressed beams. Do not use stress-relieved strands. Use of straight-strand configurations is preferred over draped strand configurations. The following requirements apply to simply supported, fully pretensioned beams, whether of straight or depressed (draped) strand profile, except where specifically noted otherwise.

B. Bridges with varying span lengths, skew angles, beam spacing, beam loads, or other design criteria may result in very similar individual designs. Consider the individual beam designs as a first trial subject to modifications by combining similar designs into groups of common materials and stranding based upon the following priorities:

   1. 28-Day Compressive Concrete Strength (**f 'c**)
   2. Stranding (size, number, and location)
   3. Compressive Concrete Strength at Release (**f 'ci**)
   4. Full Length Shielding (Debonding) of prestressing strands is prohibited.

Commentary: Grouping beam designs in accordance with the priority list maximizes casting bed usage and minimizes variations in materials and stranding.

C. In order to achieve uniformity and consistency in designing beams, the following parameters apply:

1. Provide a strand pattern that is symmetrical about the centerline of the beam. Utilize the standard strand pattern grids for standard FDOT prestressed beams. See the applicable ***Design Standard*** and the appropriate ***Instructions for Design Standards (IDS)*** for more information.

2. Distribute debonded strands evenly throughout strand pattern. Whenever possible, separate debonded strands in all directions by at least one fully bonded strand.

3. When analyzing stresses of simple span beams, limit stresses in accordance with LRFD Table 5.9.4.1.2-1 with the exception that for the outer 15 percent of the design span, tensile stress at the top of beam may not exceed $12\sqrt{f'_{ci}}$ at release. For transient loads during construction the tensile stress limit may be taken as $6\sqrt{f'_c}$. It is not necessary to check tensile stresses in the top of simple span beams in the final condition.

4. The minimum compressive concrete strength at release will be the greater of 4.0 ksi or 0.6 **f 'c**. Higher release strengths may be used on a case by case basis but must not exceed the lesser of 0.8 **f 'c** or 6.0 ksi.

5. Design and specify prestressed beams to conform to classes and related strengths of concrete as shown in Table 4.3.1-1.

6. When calculating the Service Limit State capacity for pretensioned concrete flat slabs and girders, use the transformed section properties as follows: at strand transfer; for calculation of prestress losses; for live load application. For precast, pretensioned, normal weight concrete members designed as simply supported beams, use ***LRFD*** [5.9.5.3], Approximate Estimate of Time-Dependent Losses. For all other members use ***LRFD*** [5.9.5.4] with a 180-day differential between girder concrete casting and placement of the deck concrete.

Commentary: The FDOT cannot practically control, nor require the Contractor to control, the construction sequence and materials for simple span precast, prestressed beams. To benefit from the use of refined time-dependent analysis, literally every prestressed beam design would have to be re-analyzed using the proper construction times, temperature, humidity, material properties, etc. of both the beam and the yet-to-be-cast composite slab.

7. Stress and camber calculations for the design of simple span, pretensioned components must be based upon the use of transformed section properties.

8. When wide-top beams such as Florida-I, bulb-tees and AASHTO Types V and VI beams are used in conjunction with stay-in-place metal forms, evaluate the edges of flanges of those beams to safely and adequately support the self-weight of the forms, concrete, and construction load specified in Section 400 of the ***Specifications***.

   For Florida-I Beams, the Standard top flange reinforcing allows for a beam spacing up to 14 feet with an 8½" deck."

9. The design thickness of the composite slab must be provided from the top of the stay-in-place metal form to the finished slab surface, and the superstructure concrete quantity will not include the concrete required to fill the form flutes.

Table 4.3.1-1 Concrete Classes and Strengths

Class of Concrete	28-Day Compressive Strength (f'c) KSI
Class III[1]	5
Class IV	5.5
Class V (special)	6
Class V	6.5
Class VI	8.5

1. Class III concrete may be used only when the superstructure environment is classified as Slightly Aggressive in accordance with the criteria in ***SDG*** Chapter 2.

D. The maximum prestressing force (**P_u**) from fully bonded strands at the ends of prestressed beams must be limited to the values shown in the ***Instructions for Design Standards (IDS)***. For non-standard single web prestressed beam designs, modify the requirements of ***LRFD*** [5.10.10.1] to provide vertical reinforcement in the ends of pretensioned beams with the following splitting resistance:

- 3% **P_u** from the end of the beam to h/8, but not less than 10";
- 5% **P_u** from the end of the beam to h/4, but not less than 10";
- 6% **P_u** from the end of the beam to 3h/8, but not less than 10".

Do not apply losses to the calculated prestressing force (P_u). The minimum length of debonding from the ends of the beams is half the depth of the beam. Do not modify the reinforcing in the ends of the beams shown in the Standard Drawings without the approval of the State Structures Design Engineer.

Commentary: The maximum splitting force from bonded prestressing strands has been increased in order to minimize horizontal and diagonal web cracking, and also to compensate for the longer splitting force distribution length (h/4) adopted by LRFD in 2002. An additional splitting zone from h/4 to 3h/8 has been added to control the length of potential cracks, consistent with previous standard FDOT designs.

E. Provide embedded bearing plates in all prestressed I-Girder beams deeper than 60-inches. Provide embedded bearing plates for all Florida-I beams.For all beam designs where the beam grade exceeds 2%, include beveled bearing plates.

Commentary: Bearing plates add strength to the ends of the concrete beams to resist the temporary loadings created in the bearing area by the release of prestressing forces and subsequent camber and elastic shortening.

F. Standard prestressed beam properties are included in the ***Instructions for Design Standards (IDS)***.

G. For pretensioned simple span Florida-I Beam bridges, eliminating the permanent end diaphragms is the preferred option. However, in cases where there are significant lateral loads, partial depth, permanent end diaphragms may be used. See ***SDM*** Chapter 15 for partial depth diaphragm details. For spans requiring end diaphragms, determine if diaphragms are necessary for every bay.

Commentary: For spliced post-tensioned girder bridges, diaphragms at the splice and anchorage locations are required.

H. Analyze spans subject to significant lateral loads to determine if diaphragms are needed.

Commentary: When investigating the effect of significant lateral loads such as vessel collision or wave loads, check the stresses at the interface of the beam top flange and the beam web, from each end of the beam to a longitudinal distance approximately equivalent to the beam height.

4.3.2 Beam Camber/Build-Up over Beams

A. Unless otherwise required as a design parameter, beam camber for computing the build-up shown on the plans must be based on 120-day old beam concrete.

B. On the build-up detail, show the age of beam concrete used for camber calculations as well as the value of camber due to prestressing minus the dead load deflection of the beam.

C. Consider the effects of horizontal curvature with bridge deck cross slope when determining the minimum buildup over the tip of the inside flange.

Commentary: In the past, the FDOT has experienced significant slab construction problems associated with excessive prestressed, pretensioned beam camber. The use of straight strand beam designs, higher strength materials permitting longer spans, stage construction, long storage periods, improperly placed dunnage, and construction delays are some of the factors that have contributed to camber growth. Actual camber at the time of casting the slab equal to 2 to 3 times the initial camber at release is not uncommon.

4.3.3 Florida Bulb-T Beams and Florida-I Beams [5.14.1.2.2]

The minimum web thicknesses for Florida Bulb-T and Florida-I beams are:

Pretensioned Beams	6½ - inches
Post-Tensioned Beams	See Table 4.5.6-1

4.3.4 Temporary Bracing (Rev. 01/12)

A. Use ***Design Standard*** Index 20005, Prestressed Beam Temporary Bracing, for all simple span pretensioned concrete I-Beam bridges as applicable. See the ***Instructions for Design Standards (IDS)*** for ***Design Standards*** Index 20005 for more information.

B. For segmented beams that are erected utilizing temporary shoring and/or are spliced together using post-tensioning, design and detail project specific temporary bracing based on the applicable portions of ***Design Standards*** Index 20005 and include additional bracing types and/or details as required.

C. Evaluate both roll stability and service stresses for simple span pretensioned beams at midspan assuming full prestress losses have occurred using Service I limit states per ***SDG*** 2.4 and ***LRFD*** [3.4.2] for the following construction conditions:

1. Girder Placement (Construction Active) – typical loads include the girder self-weight and construction active wind load; support conditions are un-braced beam set on bearing pads. If beams require bracing at these loads, specify in the Table of Temporary Bracing Variables. in the Structures Plans that the beam is to be braced at each end prior to crane release. It can be assumed that standard Florida-I beams less than 78 inches in height with spans less than 150 feet and skews between zero and 45 degrees are stable without bracing at girder placement.
2. Braced Girder (Construction Inactive) – typical loads include the girder self-weight and construction inactive wind load; support conditions are braced beam set on bearing pads.
3. Deck Placement (Construction Active) – typical loads include girder self-weight, construction active wind load and anticipated construction loads; support conditions are braced beam set on bearing pads.

Check Roll Stability according to procedures demonstrated in:

- Mast, R.F (1989) “Lateral Stability of Long Prestressed Concrete Beams” Part I, PCI Journal, Vol 34, pp. 34-53. (Available at http://www.pci.org/view_file.cfm?file=JL-89-JANUARY-FEBRUARY-3.pdf)
- Mast, R.F (1993) “Lateral Stability of Long Prestressed Concrete Beams” Part II, PCI Journal, Vol 38, pp. 70-88. (Available at http://www.pci.org/view_file.cfm?file=JL-93-JANUARY-FEBRUARY-30.pdf and http://www.pci.org/view_file.cfm?file=JL-93-JANUARY-FEBRUARY-31.pdf)

D. Evaluate both roll stability and service stresses for spliced segmented beams at their ends and at other locations as appropriate using the applicable loads and support conditions specified above with modifications as required to reflect the actual construction sequence and/or methods.

E. The minimum factor of safety for cracking is 1.0, and the minimum factor of safety for failure is 1.5.

F. Bracing design shall be per Strength III limit states per ***SDG*** 2.4 and ***LRFD*** [3.4.2].

Commentary: The Engineer of Record shall check the stability of the beams in the erected condition and calculate the bracing locations and forces based on construction wind loads and other assumed construction loads. The Contractor and the Specialty Engineer will work together to produce the design of the bracing system based on forces given by the Engineer of Record.

Click to download a Mathcad program Beam Stability.

4.4 PRECAST, PRESTRESSED SLAB UNITS [5.14.4.3]

A. Unless otherwise specified on the plans, the design camber must be computed for 120-day-old slab concrete. The design camber shown on the plans is the value of camber due to prestressing minus the dead load deflection after all prestress losses.

B. In order to accommodate the enhanced post-tensioning system requirement of three levels of protection for strand, transverse post-tensioned pre-stressed slab units must incorporate a double duct system. The outer duct must be cast into the slab and sized to accommodate a differential camber of 1-inch. The inner duct must be continuous across all joints and sized based upon the number of strands or the diameter of the bar coupler. Specify that both the inner duct and the annulus between the ducts be grouted.

4.5 POST-TENSIONING, GENERAL [5.14.2]

This section applies to both concrete boxes and post-tensioned I-girders unless otherwise noted.

4.5.1 Integrated Drawings

A. Show congested areas of post-tensioned concrete structures on integrated drawings with an assumed post-tensioning system. Such areas include anchorage zones, areas containing embedded items for the assumed post-tensioning system, areas where post-tensioning ducts deviate both in the vertical and transverse directions, and other highly congested areas as determined by the Engineer and/or the Department.

B. For all post-tensioned structures, evaluate and accommodate possible conflicts between webs and external tendons. Check for conflicts between future post-tensioning tendons and permanent tendons.

C. Select the assumed post-tensioning system, embedded items, etc. in a manner that will accommodate competitive systems using standard anchorage sizes of 4 - 0.6" dia, 7 - 0.6" dia, 12 - 0.6" dia, 15 - 0.6" dia., 19 - 0.6" dia and 27 - 0.6" dia. Integrated drawings utilizing the assumed system must be detailed to a scale and quality required to show double-line reinforcing and post-tensioning steel in two-dimension (2-D) and, when necessary, in complete three-dimension (3-D) drawings and details.

D. Verify that the post tensioning in the structure can be accommodated by the anchorages listed in the specifications and has been sized according to the Department’s approved post-tensioning systems.

E. Space post tensioning anchorages to accommodate spirals based on the anchorage size and not on the number of strands in that anchorage.

F. Check required clearances for stressing jacks. Do not detail structures or provide construction sequences that require curved stressing noses for jacks.

4.5.2 Prestress

A. Secondary Effects:

1. During design of continuous straight and curved structures, account for secondary effects due to post-tensioning.
2. Design curved structures for the lateral forces due to the plan curvature of the tendons.

B. Tendon Geometry: When coordinating design calculations with detail drawings, account for the fact that the center of gravity of the duct and the center of gravity of the prestressing steel are not necessarily coincidental.

C. Required Prestress: On the drawings, show prestress force values for tendon ends at anchorages.

D. Internal/External Tendons: External tendons must remain external to the section without entering the top or bottom slab.

E. Strand Couplers: Strand couplers as described in ***LRFD*** [5.4.5] are not allowed.

4.5.3 Material

A. Concrete (minimum 28-day cylinder strengths):

1. Precast superstructure (including CIP joints): 5.5 ksi
2. Precast pier stems: 5.5 ksi
3. Post-tensioned I-girders: 5.5 ksi

B. Post-Tensioning Steel:

1. Strand: ASTM A416, Grade 270, low relaxation.
2. Parallel wires: ASTM A421, Grade 240.
3. Bars: ASTM A722, Grade 150.

C. Post-Tensioning Anchor set (to be verified during construction):

1. Strand: 3/8-inch
2. Parallel wires: 1/2-inch
3. Bars: 0

4.5.4 Expansion Joints

A. Do not design superstructures utilizing expansion joints within the span (i.e. ¼ point hinges).

B. Settings: The setting of expansion joint recesses and expansion joint devices, including any precompression, must be clearly stated on the drawings. Expansion joints must be sized and set at time of construction for the following conditions:

1. Allowance for opening movements based on the total anticipated movement resulting from the combined effects of creep, shrinkage, and temperature rise and

fall. For box girder structures, compute creep and shrinkage from the time the expansion joints are installed through day 4,000.

2. To account for the larger amount of opening movement, expansion devices shall be set precompressed to the maximum extent possible. In calculations, allow for an assumed setting temperature of 85 degrees F. Provide a table on the plans giving precompression settings according to the prevailing conditions. Size expansion devices and set to remain in compression through the full range of design temperature from their initial installation until a time of 4,000 days.
3. Provide a table of setting adjustments to account for temperature variation at installation. Indicate the ambient air temperature at time of installation, and note that adjustments must be calculated for the difference between the ambient air temperature and the mean temperature given in ***SDG*** 2.7.

C. Armoring: Design and detail concrete corners under expansion joint devices with adequate steel armoring to prevent spalling or other damage under traffic. The armor shall be minimum 4-inch x 4-inch x 5/8-inch galvanized angles anchored to the concrete with welded studs or similar devices. Specify that horizontal concrete surfaces supporting the expansion joint device and running flush with the armoring have a finish acceptable for the device. Detail armor with adequate vent holes to assure proper filling and compaction of the concrete under the armor.

4.5.5 Ducts, Tendons and Anchorages

A. Specify tendon duct radius and dimensions to duct PI points on the design plans. For parabolically curved ducts, show offset dimensions to post-tensioning duct trajectories from fixed surfaces or clearly defined reference lines at intervals not exceeding 5 feet.

B. Curved ducts that run parallel to each other or around a void or re-entrant corner must be sufficiently encased in concrete and reinforced as necessary to avoid radial failure (pull-out into another duct or void). In the case of approximately parallel ducts, consider the arrangement, installation, stressing sequence, and grouting in order to avoid potential problems with cross grouting of ducts.

C. Detail post-tensioned precast I-girders to utilize round ducts only.

Table 4.5.5-1 Minimum Center-to-Center Duct Spacing

Post Tensioned Bridge Type	Minimum Center To Center Longitudinal Duct Spacing[1]
Precast Segmental Balanced Cantilever Cast-In-Place Balanced Cantilever	8-inches, 2 times outer duct diameter, or outer duct diameter plus 4½-inches whichever is greater.
Spliced I-Girder Bridges	4-inches, outer duct diameter plus 1.5 times maximum aggregate size, or outer duct diameter plus 2-inches whichever is greater.
C.I.P. Voided Slab Bridges C.I.P. Multi-Cell Bridges	When all ducts are in a vertical plane, 4-inches, outer duct diameter plus 1.5 times maximum aggregate size, or outer duct diameter plus 2-inches whichever is greater. [2]For two or more ducts set side-by-side, outer duct diameter plus 3-inches.

1. Bundled tendons are not allowed.
2. The 3-inch measurement must be measured in a horizontal plane.

D. Size ducts for all post-tensioning bars ½ inch larger than the diameter of the bar coupler.

E. Internal post-tensioning ducts must be positively sealed with a segmental duct coupler or o-ring at all segment joints. Design and detail all internal tendon segmental duct couplers with maximum deflection of 6 degrees at the segment joint. Segmental duct couplers or o-ring hardware are to be mounted perpendicular to bulkhead at the segment joints. Use only approved PT systems which contain segmental duct couplers. See tendon alignment schematic below. Require cast-in-place closure joints to be minimum 18-inch wide.

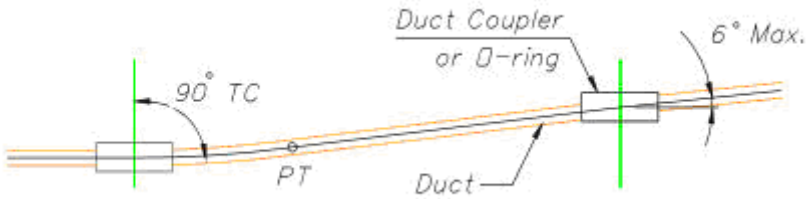

Commentary: Segmental duct couplers shall be made normal to joints to allow stripping of the bulkhead forms. Theoretically, the tendon must pass through the coupler without touching the duct or coupler. Over-sizing couplers allows for standardized bulkheads and avoids curved tendons.

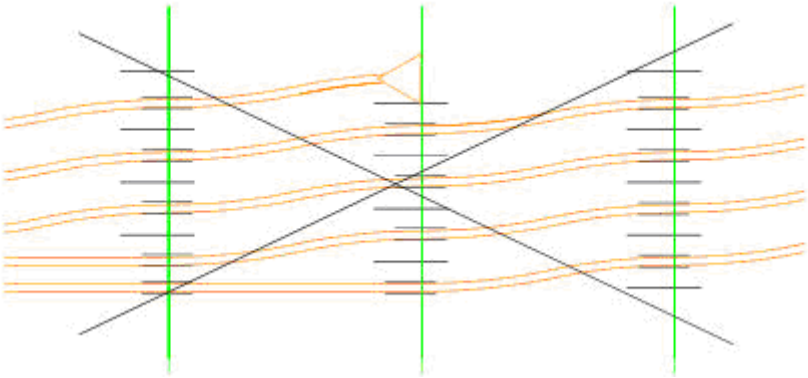

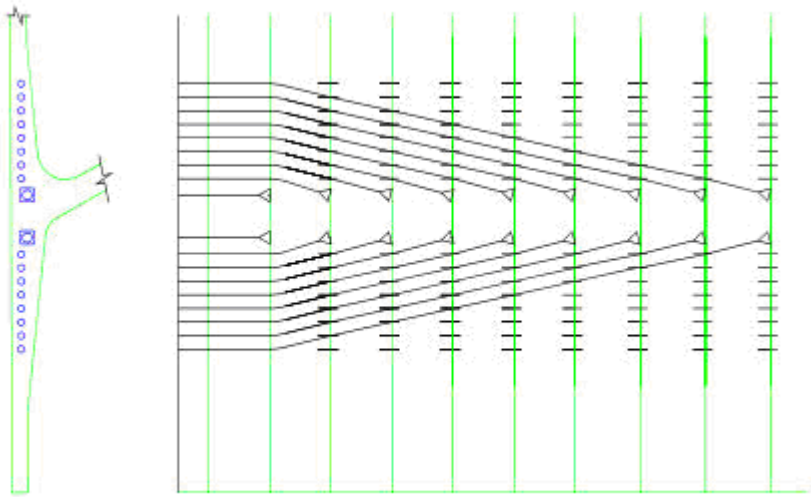

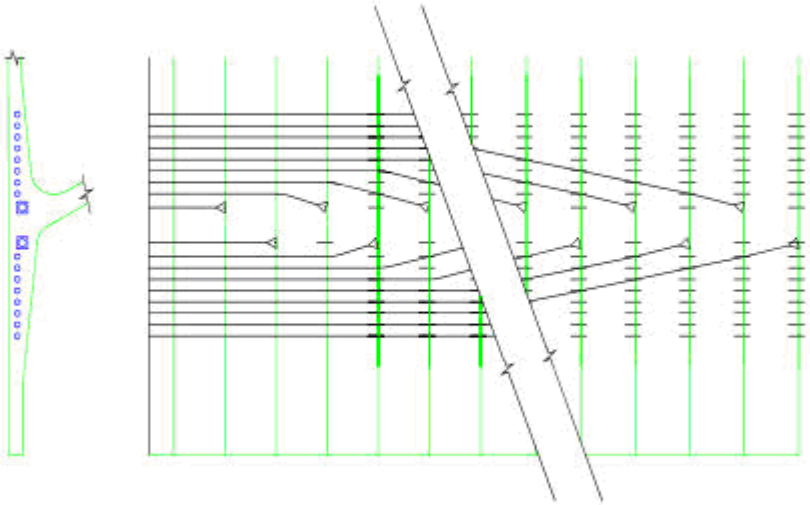

F. To allow room for the installation of duct couplers, detail all external tendons to provide a 1½-inch clearance between the duct surface and the face of the concrete.

G. Where external tendons pass through deviation saddles, design the tendons to be contained in grouted steel pipes, cast into the deviation saddle concrete.

H. Strand anchorages cast into concrete structures are not allowed.

I. For external tendons, use steel pipe ducts for curved portions of tendon profile in the diaphragm. Plastic duct is allowed for straight portions of tendon profile in the diaphragm.

Table 4.5.5-2 Minimum Tendon Radius

Tendon Size	Minimum Radius
19 - 0.5” dia, 12 - 0.6” dia	8 feet
31 - 0.5” dia, 19 - 0.6” dia	10 feet
55 - 0.5” dia, 37 - 0.6” dia	13 feet

J. All balanced cantilever bridges must utilize a minimum of four positive moment external draped continuity tendons (two per web) that extend to adjacent pier diaphragms.

Table 4.5.5-3 Min. Tendons Required for Critical Post-tensioned Sections

Post Tensioned Bridge Element	Minimum Number of Tendons
Mid Span Closure Pour C.I.P. and Precast Balanced Cantilever Bridges	Bottom slab – two tendons per web Top slab – One tendon per web (4 - 0.6-inch dia. min.)
Span by Span Segmental Bridges	Four tendons per web
C.I.P. Multi-Cell Bridges	Three tendons per web
Spliced I-Girder Bridges[1]	Three tendons per girder
Unit End Spans C.I.P. and Precast Balanced Cantilever Bridges	Three tendons per web
Diaphragms - Vertically Post-Tensioned	Six tendons; if strength is provided by P.T. only Four tendons; if strength is provided by combination of P.T. and mild reinforcing
Diaphragms - Vertically Post-Tensioned	Four Bars per face, per cell
Segment - Vertically Post-Tensioned	Two Bars per web

1. 3 girders minimum per span.

4.5.6 Minimum Dimensions (Rev. 01/12)

Table 4.5.6-1 Dimensions for sections containing post-tensioning tendons

Post Tensioned Bridge Element	Minimum Dimension
Webs; I-Girder Bridges	8-inches thick or outer duct diameter plus 2 x cover plus 2 x stirrup dimension (deformed bar diameter); whichever is greater.
End Blocks; I-Girder Bridges	Length (including transition) not less than 1.5x depth of girder
Regions of Slabs without longitudinal tendons	8-inches thick, or as required to accommodate grinding, concrete covers, transverse and adjacent longitudinal P.T. ducts and top and bottom mild reinforcing mats, with allowance for construction tolerances whichever is greater.
Regions of slabs containing longitudinal internal tendons	9-inches thick, or as required to accommodate grinding, concrete covers, transverse and longitudinal P.T. ducts and top and bottom mild reinforcing mats, with allowance for construction tolerances whichever is greater.
Clear Distance Between Circular Voids C.I.P. Voided Slab Bridges	Outer duct diameter plus 2 x cover plus 2 x stirrup dimension (deformed bar diameter); or outer duct diameter plus vertical reinforcing plus concrete cover; whichever is greater.
Segment Pier Diaphragms containing external post-tensioning	[1]4 feet thick.
Webs of C.I.P. boxes with internal tendons	For single column of ducts: 12-inches thick. [2]For two or more ducts set side by side: Web thickness must be sufficient to accommodate concrete covers, longitudinal P.T. ducts, 3 -inch min. spacing between ducts, vertical reinforcing, with allowance for construction tolerances.

1. Post-Tensioned pier segment halves are acceptable.
2. The 3 -inch measurement must be measured in a horizontal plane.

4.5.7 Corrosion Protection

A. Detail all post-tensioned bridges consistent with the Specifications and Standards and include the following corrosion protection strategies:

   1. Enhanced Post-tensioned systems.
   2. Fully grouted tendons.
   3. Multi-level anchor protection.
   4. Watertight bridges.
   5. Multiple tendon paths.

B. Three Levels of Strand Protection: Enhanced post-tensioning systems require three levels of protection for strand and four levels for anchorages. Deck overlays are not considered a level of protection for strands or anchorages.

1. Within the Segment or Concrete Element:

   a. Internal Tendons.
      i. Concrete cover.
      ii. Plastic duct.
      iii. Complete filling of the duct with approved grout.

   b. External Tendons.
      i. Hollow box structure itself.
      ii. Plastic duct.
      iii. Complete filling of the duct with approved grout.

2. At the segment face or construction joint (Internal and External Tendons)

   a. Epoxy seal (pre-cast construction) or wet cast joint (cast-in-place construction.)
   b. Continuity of the plastic duct.
   c. Complete filling of the duct with approved grout.

C. Four Levels of Protection for Anchorages on interior surfaces (interior diaphragms, etc.).

1. Grout.
2. Permanent grout cap.
3. Elastomeric seal coat.
4. Concrete box structure.

D. Four Levels of Protection for Anchorages on exterior surfaces (Pier Caps, expansion joints, diaphragms etc.)

1. Grout.
2. Permanent grout cap.
3. Encapsulating pour-back.
4. Seal coat (Elastomeric/Methyl Methacrylate on riding surface.)

E. Internal post-tensioning bars used for erection with acceptable ducts, grout, and cover may remain in the structure with no additional protection required. The force from these bars shall not be incorporated in the service stress or strength calculations for the structure.

4.5.8 Erection Schedule and Construction System (Rev. 01/12)

A. Include a description of the construction method upon which the design is based.

B. Include in the design documents, in outlined, schematic form, a typical erection schedule and anticipated construction system.

C. State in the plans, the assumed erection loads, along with times of application and removal of each of the erection loads.

D. Refer to ***SDM*** Chapter 20 and ***SDM*** Chapter 23 for additional requirements, detailing considerations, and general erection procedures for segmental bridges and spliced girder bridges, respectively.

Commentary: Temporary load conditions often control the design and detailing of segmental and spliced girder structures. Ensure the structure components have been sized for the temporary and final condition and loadings of the bridge.

For large projects, more than one method of construction may be necessary based on project specific site constraints.

4.5.9 Final Computer Run

Prove the final design by a full longitudinal analysis taking into account the assumed construction process and final long-term service condition, including all time related effects.

4.5.10 Epoxy Joining of Segments

All joints between precast segmental bridge segments must contain epoxy on both faces. This requirement applies to substructure and superstructure precast units. Dry segment joints are not allowed.

4.5.11 Principal Tensile Stresses [5.8.5] [5.9.4.2.2] [5.14.2.3.3]

Segmental construction without the use of vertical PT bars in the webs is preferred by the Department. High principal stresses shall first be reduced by either extending the section depth and/or thickening the web. When vertical PT bars are required, limit the placement to the lesser of (1) the first two segments from the pier segment/table or (2) ten percent of the span length.

Commentary: Occasionally in C.I.P. balanced cantilever construction, vertical PT bars supplying a nominal vertical compression are used at select locations to control web cracking.

4.5.12 Maximum Duct Dimensions for Detailing

A. Use the following maximum duct dimensions for laying out tendon geometries and checking for clearances and required concrete cover in post-tensioned members.

B. Refer to the list of Approved Post-Tensioning Systems for additional details and dimensions of other post tensioning hardware components.

Table 4.5.12-1 Maximum Duct Dimensions for Detailing

Tendon Size and Type	Maximum Duct Dimensions
4 - 0.6 strands	1.54” x 3.55” (Flat duct)
7 - 0.6 strands	2.87” diameter
12 - 0.6 strands	3.58” diameter
15 - 0.6 strands	3.94” diameter
19 - 0.6 strands	4.57” diameter
27 - 0.6 strands	5.20” diameter
1” diameter bar	2.87” diameter
1 ¼” diameter bar	2.87” diameter
1 3/8” diameter bar	2.87” diameter
1 ¾” diameter bar	3.58” diameter

4.6 POST-TENSIONED BOX GIRDERS

Segmental bridges are inherently complex to design and build. They require a coordinated effort between designers and detailers in order to develop integrated plans that address all design, detailing and constructability issues. The information contained herein is only part of the requirements necessary to successfully accomplish this task. For additional requirements see ***SDM*** Chapter 20.

4.6.1 Access and Maintenance (Rev. 01/12)

During preliminary engineering and when determining structure configuration give utmost consideration to accessibility and to the safety of bridge inspectors and maintenance. Precast, pretensioned (non-post-tensioned) Florida-U-Beams are exempt from special requirements for inspection and access.

A. Height: [2.5.2.2]

1. For maintenance and inspection, the minimum interior, clear height of box girders is 6 feet.
2. Proposed heights less than 6 feet require SDO approval. If structural analysis requires less than 5 feet box depth, consult the SDO and the District Structures and Facilities Engineer for a decision on the box height and access details.

B. Electrical:

1. Design and detail interior lighting and electrical outlets in accordance with the ***Design Standards***.
2. Show interior lighting and electrical outlets at the following locations:
   a. all ingress/egress access openings
   b. both sides of diaphragms where girder is continuous

c. at the inside face of diaphragms where the girder is discontinuous, e.g. at end bents and expansion joints.

d. spaced between the above locations at approximately equal intervals not to exceed 50 feet.

Only a single interior light and electrical outlet are required if any of the above locations coincide.

C. Access:

1. Design box sections with ingress/egress access openings located at maximum 600 feet spacing. Space ingress/egress access openings such that the distance from any location within the box to the nearest opening is 300 feet or less. Provide a minimum of two ingress/egress access openings per box girder line. Locate one ingress/egress access opening near each end bent and provide additional ingress/egress access doors along the length of the box girder as required to meet the maximum spacing requirement.

2. Design ingress/egress entrances to box girders with openings placed in the bottom flange and with in-swinging, hinged, solid steel doors and steel hardware in accordance with Design Standards Index 21251. Design doors in diaphragms with in-swinging, hinged, 0.25-inch mesh, steel screen doors. Equip all doors at abutments and entrances with a lock and hasp. Require that all locks on an individual bridge be keyed alike.

3. Provide an access opening through all interior diaphragms. If the bottom of the diaphragm access opening is not flush with the bottom flange, provide concrete ramps to facilitate equipment movement.

4. The minimum diaphragm access opening is 32-inches wide x 42-inches tall, or 36 inch diameter. Indicate on plans that diaphragm access openings are to remain clear and are not to be used for utilities, drain pipes, conduits or other attachments. If these items are required, provide additional areas or openings. In all other areas of the box, provide a minimum continuous maintenance/inspection access envelope of 6'-0" high x 2'-6" along the length of the box. The 6'-0" height dimension of the envelope, to be measured from the bottom slab of the box, shall clear all tendon ducts, anchorages, blisters, deviation saddles, etc.

5. Analyze access opening sizes and bottom flange locations for structural effects on the girder. Generally, do not place ingress/egress access openings in zones of high compression. If this conflicts with the spacing requirements, contact the District Maintenance Office for direction.

6. Avoid ingress/egress access opening locations over traffic lanes that will require extensive maintenance of traffic operations and other locations such as over sloped embankments, over water or locations which would otherwise impact the safety of inspectors or the traveling public. Whenever feasible and in areas not deemed problematic from vagrant access, place access opening near the abutment where no additional equipment will be required for access. Contact the District Maintenance Office for guidance.

D. Other Exterior Openings:

1. Design each box girder with minimum 2-inch diameter ventilation or drain holes located in the bottom flange on both sides of the box spaced at approximately 50 feet or as needed to provide proper drainage. Place additional drains at all low points against internal barriers. Locate drains to accommodate bridge grade.
2. Provide drains to prevent water (including condensation) from ponding near post-tensioning components, face of diaphragms, blisters, ribs and other obstructions. Show details on Contract Drawings. Include the following:
   a. Specify a 2-inch diameter permanent plastic pipe (PVC with UV inhibitor) set flush with the top of the bottom slab.
   b. A drip recess, 1/2-inch by 1/2-inch around bottom of pipe insert.
   c. Drains at all low points against internal barriers, blisters, etc.
   d. Drains on both sides of box, regardless of cross slope (to avoid confusion.)
   e. Vermin guards for all drains and holes.
   f. A note stating, "Install similar drains at all low spots made by barriers introduced to accommodate means and methods of construction, including additional blocks or blisters."
3. Require 0.25-inch screen on all exterior openings not covered by a door. This includes holes in webs through which drain pipes pass, ventilation holes, drain holes, etc.
4. Design flexible barriers to seal openings between expansion joint segments of adjacent end units to prevent birds from roosting on the box end ledges. Barriers shall be UV and weather resistant and easily replaceable.

E. Other Box Sections - Provide accessibility to box sections, such as precast hollow pier segments, in a manner similar to that for box girders, particularly concerning the safety of bridge inspectors and maintenance personnel. During preliminary engineering and when determining structure configuration, give utmost consideration to box girder accessibility and the safety of bridge inspectors and maintenance personnel. Due to the wide variety of shapes and sizes of hollow sections such as precast concrete pier segments, numerous site constraints and environmental conditions, each application will be considered on an individual, project-by-project basis. In all cases, contact the SDO for guidance in designing adequate inspection access and safety measures.

4.6.2 Prestress

A. Deck Slab:

1. Detail all box girder deck slabs to be transversely post-tensioned.
2. Where draped post-tensioning is used in deck slabs, consideration must be given to the final location of the center of gravity of the prestressing steel within the duct.
3. Reduce critical eccentricities over the webs and at the centerline of box by ¼-inch from theoretical to account for construction tolerances.

4.6.3 Post-tensioning Anchorages (Rev. 01/12)

A. When temporary or permanent post-tensioning anchorages are required in the top or bottom slab of box girders, design and detail interior blisters, face anchors or other SDO approved means. Block-outs that extend to either the interior or exterior surfaces of the slabs are not permitted.

B. Provide continuous typical longitudinal mild reinforcing through all segment joints for Cast-in-place segmental construction.

C. Design and detail so that all future post-tensioning utilizes external tendons (bars or strands). Future post tensioning shall be designed so that any one span can be strengthened independently of adjacent spans. For each future tendon, provide one duct/ anchorage location for expansion joint diaphragms and two duct/anchorage locations for internal pier segment diaphragms.

D. Detail anchor blisters so that tendons terminate no closer than 12-inches to a joint between segments.

E. Detail all interior blisters set back a minimum of 12-inches from the joint. Provide a "V"-groove around the top slab blisters to isolate the anchorage from any free water.

F. Transverse bottom slab ribs are not allowed. Design full height diaphragms directing the deviation forces directly into the web and slab.

Figure 4.6.3-1 Deviator Diaphragm Detail

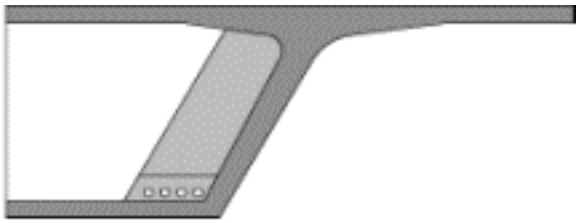

G. Raised corner recesses in the top corner of pier segments at closure joints are not allowed. The typical cross section must be continued to the face of the diaphragm. Locate tendon anchorages to permit jack placement.

Figure 4.6.3-2 Inside Corner Detail at Pier Segments

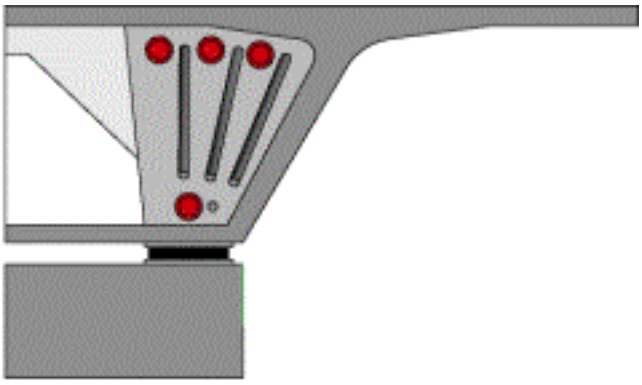

4.6.4 Design Requirements for Cantilever Bridges with Fixed Pier Tables

A. Design superstructures and substructures to accommodate erection tolerances of **L**/1000 (where **L** is the cantilever length from center of pier to the cantilever tip) for precast superstructures. Structure stresses shall be enveloped assuming a worst case condition ($\mathbf{L_A}$/1000 high on Cantilever A and $\mathbf{L_B}$ /1000 low on adjacent Cantilever B and vice-versa) assuming uncracked sections. Check the service limit state assuming these locked-in erection stresses, "**EL**" in ***LRFD*** Equation 3.4.1-2.

B. The service load stresses of the column and column-superstructure connection, including crack control of the column shall also be checked for both erection and final structure.

*Commentary: Field correction for geometry control for framed bridges built in precast balanced cantilever can result in high stresses in both the superstructure and substructure. These stresses need to be accommodated for by the designer. The **L**/1000 value is consistent with the allowable erection tolerance per FDOT Specification 452. Cast-in-place construction with travelers is excluded, since geometry will be adjusted during cantilever erection.*

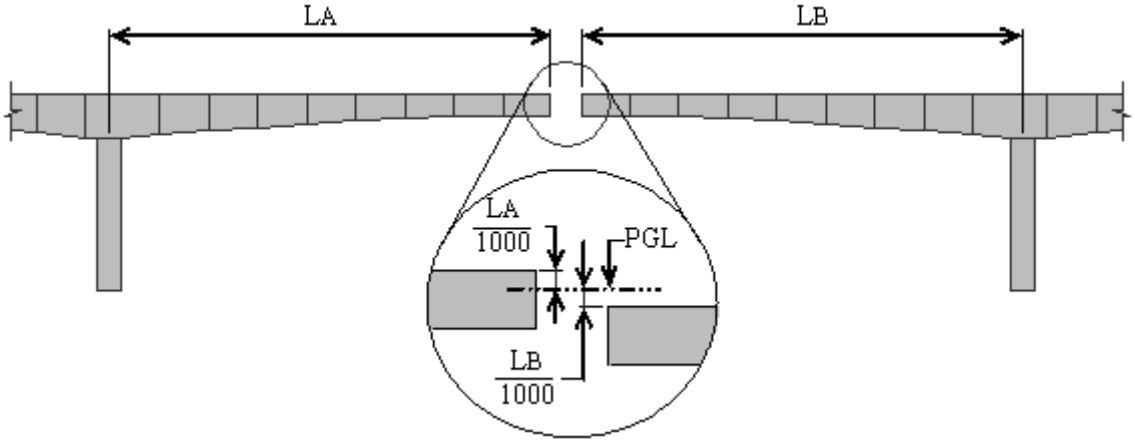

Elevation and Detail - Typical Cantilever Concrete
Segmental Box with Fixed Pier Tables

4.6.5 Creep and Shrinkage [5.14.2.3.6]

Calculate creep and shrinkage strains and effects using a Relative Humidity of 75%.

4.6.6 Expansion Joints (Rev. 01/12)

A. At expansion joints, provide a recess and continuous expansion joint device seat to receive the assembly, anchor bolts, and frames of the expansion joint, i.e. a finger or modular type joint. In the past, block-outs have been made in such seats to provide access for stressing jacks to the upper longitudinal tendon anchors set as high as possible in the anchor block. Lower the upper tendon anchors and re-arrange the anchor layout as necessary to provide access for the stressing jacks.

B. At all expansion joints, protect anchors from dripping water by means of skirts, baffles, v-grooves, or drip flanges. Ensure that drip flanges are of adequate size and shape to maintain structural integrity during form removal and erection.

Figure 4.6.6-1 Details at Expansion Joints

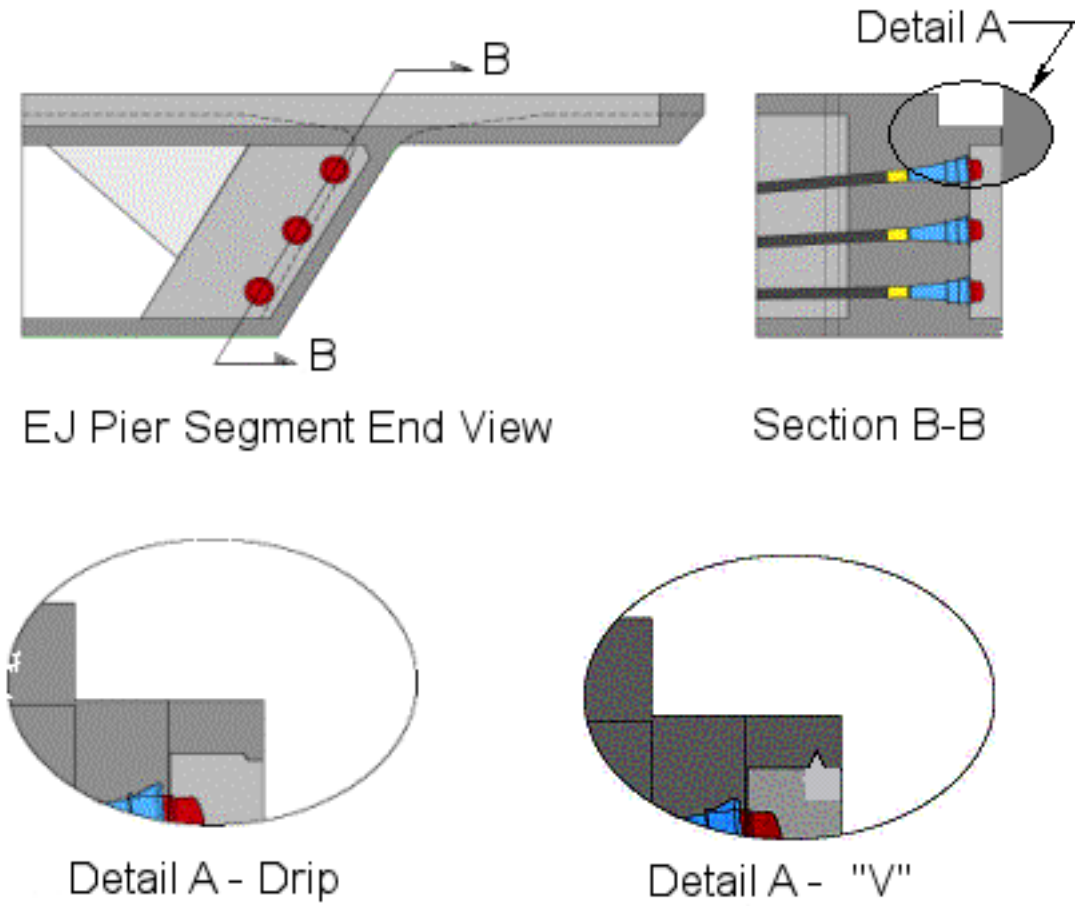

4.6.7 Construction Data Elevation and Camber Curve for Box Girders

A. General: Base Construction Data Elevations on the vertical and horizontal highway geometry. Calculate the Camber Curve based on the assumed erection loads used in the design and the assumed construction sequence.

B. Construction Data Elevations: Show construction data elevations in 3D space with "x", "y", and "z" coordinates. Locate the data points at the centerline of the box and over each web of the box.

C. Camber Curve: Provide Camber Curve data at the centerline of the box. Camber curve data is the opposite of deflections. Camber is the amount by which the concrete profile at the time of casting must differ from the theoretical geometric profile grade (generally a straight line) in order to compensate for all structural dead load, post-tensioning, long and short term time dependent deformations (creep and shrinkage), and effects of construction loads and sequence of erection. For segmental box

girders, the Specialty Engineer shall provide the camber curves, and the EOR shall check them. For other bridge types, the EOR shall provide and check the camber curves.

Commentary: Experience has shown more accurate casting curve geometry may be achieved by using the composite section properties with grouted tendons.

4.6.8 Transverse Deck Loading, Analysis & Design (Rev. 01/12)

A. The loading for the transverse design of box girders shall be limited to axle loads without the corresponding lane loads. Axle loads shall be those that produce the maximum effect from either the HL-93 design truck or the design tandem axles (***LRFD*** [3.6.1.2.2] and [3.6.1.2.3], respectively). The Multiple Presence Factors (***LRFD*** [3.6.1.1.2]) shall also be included in the transverse design. The Tire Contact Area (***LRFD*** [3.6.1.2.5]) shall not be included in the transverse design of new bridges when using influence surface analysis methods to calculate fixed-end moments.

B. The prestressed concrete deck shall be designed for Strength I and Service I Load Combination excluding all wind effects. All analyses will be performed assuming no benefit from the stiffening effects of any traffic railing barrier.

C. In ***LRFD*** [5.7.3.4], use a Class 2 exposure condition for the transverse design of segmental concrete box girders for any loads applied prior to attaining full nominal concrete strength.

*Commentary: The Tire Contact Area (**LRFD** [3.6.1.2.5]) may be used when evaluating the transverse operating rating of existing prestressed concrete box girder decks.*

4.6.9 Span-by-Span Segmental Diaphragm Details

A. Design external tendons so that the highest point of alignment is below the bottom mat of the top slab reinforcing in the diaphragm segment.

B. Design tendon grout ports and vents so that they do not pierce the top slab of a structural section.

4.6.10 Analytical Methods for the Load Rating of Post-tensioned Box Girder Bridges

Perform load rating in accordance with ***AASHTO MBE*** Section 6, Part A as modified by the Department's Bridge Load Rating Manual. For general references, see ***New Directions for Florida Post-Tensioning Bridges, Vol. 10 A "Load Rating Post-Tensioned Concrete Segmental Bridges"***. ***Volume 10A*** can be found on the Structures Design web site at the following address: www.dot.state.fl.us/structures/posttensioning.shtm.

4.7 PRETENSIONED/POST-TENSIONED BEAMS (Rev. 01/12)

A. In the design of pretensioned beams made continuous by field-applied post-tensioning, the pretensioning shall be designed such that, as a minimum, the following conditions are satisfied:

1. The pretensioning shall meet the minimum steel provisions of ***LRFD*** [5.7.3.3.2].
2. The pretensioning shall be capable of resisting all loads applied prior to posttensioning, including a superimposed dead load equal to 50% of the uniform weight of the beam, without exceeding the stress limitations for pretensioned concrete construction.
3. The pretensioning force shall be of such magnitude that the initial midspan camber at release, including the effect of the dead load of the beam, is at least ½". In computing the initial camber, the value of the modulus of elasticity shall be in accordance with ***SDG*** 1.4.1 for the minimum required strength of concrete at release of the pretensioning force, and the pretensioning force in the strands shall be reduced by losses due to elastic shortening and steel relaxation.
4. Anchorage zones of post-tensioning ducts, and beam lengths in which ducts deviate both horizontally and vertically, require integrated drawings in accordance with ***SDG*** 4.5.
5. The limitation on the percentage of debonded strands of the pretensioned strand group at the ends of beams may be increased to 37.5% provided posttensioning is applied to the beams prior to casting the deck concrete and provided that the total number of debonded strands is equal to or less than 25% of the total area of pretensioned and post-tensioned strands at the time of placement of the deck concrete.

B. Full depth diaphragms are required at all splice (closure pour) and anchorage locations. At closure pour locations, cast intermediate diaphragms with the closure pours. Design diaphragms for out-of-plane loads for chorded girders on a horizontal curve.

5 SUPERSTRUCTURE - STEEL

5.1 GENERAL

A. Design straight and curved steel bridge components in accordance with ***LRFD*** and the requirements of this chapter. (See ***Structures Manual Introduction*** I.6 References for ***LRFD*** edition.)

B. For straight bridges with one or more supports skewed greater than 20°, a grid, 3-D or finite element analysis is required considering the structure acting as a unit.

C. For curved bridges, a 3-D or finite element analysis is required.

D. Refer to AASHTO/NSBA Steel Collaboration Standards G12.1 ***Guidelines for Design for Constructability*** and G1.4 ***Guidelines for Design Details***. http://www.steelbridges.org/

5.1.1 Corrosion Prevention

A. To reduce corrosion potential, utilize special details that minimize the retention of water and debris.

B. Consider special coatings developed to provide extra protection in harsh environments.

C. Consider the corrosion potential of box structures versus plate girders. Box Girders are preferred compared to plate girders when located in extremely aggressive environments.

D. See the ***PPM***, Volume1, Section 2.10 for minimum vertical clearances.

5.1.2 Girder Transportation

The EOR is responsible for investigating the feasibility of transportation for heavy, long and/or deep girder field sections. In general, the EOR should consider the following during the design phase:

A. Whether or not multiple routes exist between the bridge site and a major transportation facility.

B. The transportation of field sections longer than 130 ft or weighing more than 160,000 pounds requires coordination through the Department's Permit Office during the design phase of the project. Shorter and/or lighter field sections may be required if access to the bridge site is limited by roadway(s) with sharp horizontal curvature or weight restrictions.

C. Where field splice locations required by design result in lengths greater than 130 feet, design and detail "Optional Field Splices" in the plans.

D. For curved steel box girders, prefabricated trusses, and integral pier cap elements, size field pieces such that the total hauling width does not exceed 16 feet.

E. Routes shall be investigated for obstructions for girder depths exceeding 9'-0," or if posted height restrictions exist on route.

Commentary: Show erection sequence in the plans consistent with typical crane capacities, reach limitations and based on girder stability requirements. In many cases, field sections can be spliced on the ground, at the site, prior to lifting into place.

Length of travel significantly increases the difficulty to transport girders. Alternative transportation should be considered as well for heavy, long and/or deep girders. Please note that transportation of girders weighing more than 160,000 pounds may require analysis by a Specialty Engineer, bridge strengthening, or other unique measures.

5.1.3 Dapped Girder Ends

Dapped steel box girders or dapped steel plate girders are not permitted.

5.1.4 Deck Slabs

See ***SDG*** 4.2 for deck slab requirements.

5.2 DEAD LOAD CAMBER [6.7.2]

A. Design the structure, including the slab, with a sequence for placing the concrete deck. Show the placement sequence on the plans.

B. Develop camber diagrams to account for the deck placing sequence. Analyze the superstructure geometry and properties and use the appropriate level of analysis to determine deflections and camber.

Commentary: Fabricate steel girders to both match the profile grade with an allowance for dead load deflection and minimize build-up when the deck is placed. A grid, 3-D or finite element analysis is required to determine girder deflections and required camber for bridges with skews greater than 20°, curved bridges, and bridges with large overhangs on the exterior girder.

5.3 STRUCTURAL STEEL [6.4.1]

5.3.1 General (Rev. 01/12)

A. Specify that all structural steel conform to AASHTO M270 (ASTM A709), Grade 36, 50, 50W, HPS 50W or HPS 70W. The Department may approve HPS 100W for use in special cases. HPS steel is the preferred material for steel Integral and Straddle Pier caps because of its added toughness. The designer is responsible for investigating the availability of HPS steel and to evaluate its potential impact on the construction schedule.

B. Show the ASTM A709 designation on the contract documents.

C. Do not specify painting of weathering steel unless deemed necessary based on project specific aesthetic requirements.

D. Miscellaneous hardware, including shapes, plates, and threaded bar stock, shall conform to ASTM A709, Grade 36.

Commentary: ASTM A709 includes notch toughness, weldability and other supplementary requirements for steel bridges. When these supplementary requirements are specified, they exceed the requirements of other ASTM steel specifications.

5.3.2 Testing

A. Fracture critical members are defined as tension members or tension components of nonredundant members whose failure would result in the collapse of the structure. Examples include:

1. All tension components of single box superstructures.
2. All tension components of double plate girder superstructures.
3. All tension components in the positive moment region of double box superstructures. Negative moment regions over the piers have four top flanges and are therefore considered redundant.

B. Avoid fracture critical members. Fracture critical requirements are expensive due to the intensive welding procedures, base metal and weld tests, and inspections after fabrication. Two girder systems on non-movable structures are undesirable and must be approved by the State Structures Design Engineer.

C. Designate on the plans, all:

1. Girder components (non-fracture critical tension components) that require CVN testing only.
2. Fracture critical girder components (defined in A).
3. Splice plates to be tested to the requirements of the tension components to which they are attached. See ***SDM*** Chapter 16.

5.4 BOLTS [6.4.3.1]

A. Design structural bolted connections as "slip-critical." Use ASTM A325, Type 1, high-strength bolts for painted connections, and Type 3 bolts for unpainted weathering steel connections.

B. Do not use ASTM A490 bolts unless approved by the SDO or DSDO.

C. Non-high-strength bolts shall conform to ASTM A307.

D. Bolt diameters of 3/4, 7/8, 1, or 1 1/8-inch typically should be used. Larger bolts may be used with prior approval by the Department. Use one diameter and grade of bolt for any individual connection. See also ***SDM*** Chapter 16.

5.5 MINIMUM STEEL DIMENSIONS [6.7.3]

A. The following minimum dimensions have been selected to reduce distortion caused by welding and to improve girder stiffness for shipping and handling.

1. The minimum thickness of plate girder and box girder webs is 7/16-inch.
2. The minimum flange size for plate girders and top flanges of box girders is 3/4-inch x 12-inches.
3. The minimum box girder bottom flange thickness is 1/2-inch.
4. The minimum stiffener thickness is 1/2-inch.

B. Specify flange plate widths and web plate depths in 1-inch increments. Keep flange widths constant within field sections.

C. Specify plates in accordance with the commonly available thicknesses of Table 5.5-1.

D. Minimize the different flange plate thicknesses so that the fabricator is not required to order small quantities. See ***SDM*** Chapter 16.

Table 5.5-1 Thickness Increments for Common Steel Plates

THICKNESS INCREMENT	PLATE THICKNESS
1/8-inch (1/16-inch for web plates)	up to 2-1/2-inches
1/4-inch	> 2-1/2-inches

5.6 BOX SECTIONS

5.6.1 General

During preliminary engineering and when determining structure configuration, give utmost consideration to accessibility and to the safety of bridge inspectors and maintenance. See ***SDM*** Chapter 16.

5.6.2 Access and Maintenance (Rev. 01/12)

A. Height:

1. For maintenance and inspection, the minimum interior, clear height of box girders is 6 feet.
2. Proposed heights less than 6 feet require SDO approval. If structural analysis requires less than 5 feet box depth, consult the SDO and the District Structures and Facilities Engineer for a decision on the box height and access details.

B. Electrical:

1. Design and detail interior lighting and electrical outlets in accordance with the ***Design Standards***.

2. Show interior lighting and electrical outlets at the following locations:
   a. all ingress/egress access openings
   b. both sides of diaphragms where girder is continuous
   c. at the inside face of diaphragms where the girder is discontinuous, e.g. at end bents and expansion joints.
   d. spaced between the above locations at approximately equal intervals not to exceed 50 feet.

   Only a single interior light and electrical outlet are required if any of the above locations coincide.
3. Where heights permit, show lighting mounted along center of box.

C. Access:

1. Design box sections with ingress/egress access openings located at maximum 600 feet spacing. Space ingress/egress access openings such that the distance from any location within the box to the nearest opening is 300 feet or less. Provide a minimum of two ingress/egress access openings per box girder line. Locate one ingress/egress access opening near each end bent and provide additional ingress/egress access openings along the length of the box girder as required to meet the maximum spacing requirement.
2. Specify box girder ingress/egress entrances in the bottom flanges with in-swinging, hinged, solid steel doors and steel hardware in accordance with Design Standard Index 21250. Design doors in diaphragms with in-swinging, hinged, 0.25-inch mesh, steel screen doors. Equip all doors at abutments and entrances with a lock and hasp. Require that all locks on an individual bridge be keyed alike.
3. Provide an access opening through all interior diaphragms.
4. The minimum access opening at entrance and diaphragm opening is 32-inches wide x 42-inches tall or 36-inch diameter. Indicate on the plans that diaphragm access openings are to remain clear and are not to be used for utilities, drain pipes, conduits or other attachments. If these items are required, provide additional areas or openings.
5. Analyze access opening sizes and bottom flange locations for structural effects on the girder.Generally, do not place ingress/egress access openings in compression zones. If this conflicts with the spacing requirements, contact the District Maintenance Office for direction.
6. Avoid ingress/egress access opening locations over traffic lanes that will require extensive maintenance of traffic operations and other locations such as over sloped embankment, over water or locations which would otherwise impact the safety of inspectors or the traveling public. Whenever feasible and in areas not deemed problematic from vagrant access, place access opening near the abutment where no additional equipment will be required for access. Contact the District Maintenance Office for guidance.
7. Do not specify ladder braces in locations where ingress/egress access opening is not accessible from a ladder, e.g. bottom flange heights > 25ft.

D. Other Exterior Openings:

1. Design each box girder with minimum 2-inch diameter ventilation or drain holes located in the bottom flange on both sides of the box spaced at approximately 50 feet or as needed to provide proper drainage. Place drains at all low points against internal barriers.
2. Require 0.25-inch mesh screen on all exterior openings not covered by a door. This includes holes in webs through which pass utility pipes, ventilation holes, drain holes, etc.
3. Design flexible barriers to seal openings between expansion joint segments of adjacent end units to prevent birds from roosting on the box end ledges. Barriers shall be UV and weather resistant and easily replaceable.

5.6.3 Cross Frames [6.7.4]

A. Design external cross frames as an "X-frame" or a "K-frame" as noted for "I-girders". Permanent external cross frames for steel box structures are not desirable.

B. Design internal cross frames as a "K-frame". Show internal cross frames to be connected by welding or bolting to stiffeners in the fabrication shop.

C. Detail cross frames to be attached to box girders at stiffener locations.

Commentary: An "X-frame" internal diaphragm is easier to fabricate and erect than a "K-frame," but the "K-frame" allows easier inspection access in box girders.

5.6.4 Lateral Bracing [6.7.5]

A. For box girders, design an internal lateral bracing system in the plane of the top flange.

B. When setting haunch heights, include height necessary to avoid conflicts between lateral bracing and stay-in-place metal forms.

Commentary: A single diagonal member is preferred over an "X-diagonal" configuration for ease of fabrication and erection.

5.6.5 Transverse Concrete Deck Analysis

For steel box girder bridges, perform a transverse deck analysis at the Service I and Strength I load combinations using the truck and tandem portion of the HL-93 live load (do not include the lane load). For deck design, do not include the wind effects for the Service I load combination. All analyses will be performed assuming no benefit from the stiffening effects of any traffic railing barrier and with a maximum multiple presence factor not greater than 1.0. For the for Service I load combination in transversely prestressed concrete decks, limit the outer fiber stress due to transverse bending to $\mathbf{3}\sqrt{\mathbf{f'c}}$ for aggressive environments and $\mathbf{6}\sqrt{\mathbf{f'c}}$ for all other environments. For the Service I load combination in reinforced concrete decks, see ***LRFD*** [5.7.3.4].

5.7 DIAPHRAGMS AND CROSS FRAMES FOR "I-GIRDERS" [6.7.4]

A. Design cross frames and diaphragms (cross frames at piers and abutments) with bolted connections at transverse and bearing stiffener locations and connected directly to stiffeners without the use of connection plates whenever possible. Generally, a "K-frame" detailed to eliminate variation from one cross frame to another is the most economical arrangement and should be used. For straight bridges with a constant cross section, parallel girders, and a girder-spacing-to-girder-depth ratio less than two, an "X-frame" design is generally the most economical and must be considered.

B. For straight I-girder units where supports are parallel and all supports are skewed less than or equal to 20°, orient cross frames parallel to the supports. In general, for all other cases, orient cross frames radial or normal to girder lines.

5.8 TRANSVERSE INTERMEDIATE STIFFENERS [6.10.11.1]

A. Specify that transverse intermediate stiffeners providing cross frame connections be fillet welded to the compression flange and fillet welded or bolted to the tension flange or flanges subject to stress reversal. If bolted tab plates are used, specify that the bolts are to be installed prior to making welds.

Commentary: On tension flanges, welded connections are preferred because of the lower cost, but the design of the flange must consider the appropriate fatigue detail category. A bolted connection is acceptable if the cost is justified.

B. For straight I-girder bridges, specify that transverse intermediate stiffeners without cross frame connections have a "tight-fit" at the tension flange and be fillet welded to the compression flange. For curved I-girder bridges, transverse stiffeners shall be attached to both flanges.

C. For straight box girder bridges, specify that intermediate stiffeners not used as connection plates be fillet welded to the compression flange and cut back at the tension and stress reversal flanges.

5.9 BEARING STIFFENERS [6.10.11.2]

A. For plate girder bridges with grades less than or equal to 4%, place bearing stiffeners normal to the bottom flange. The effect of the grade shall be considered in design of the stiffener. For grades greater than 4%, orient bearing stiffeners to be vertical under full dead load.

B. For box girder bridges, place bearing stiffeners normal to the bottom flange.

C. For bearing stiffeners that provide diaphragm connections, specify a "finish-to-bear" finish on the bottom flange and specify fillet welded connections to both the top and bottom flanges.

D. In negative moment regions only, stiffeners with attached diaphragms may be bolted to the top flange.

Commentary: In negative moment regions, welded connections are preferred because of the lower cost, but the design of the flange must consider the appropriate fatigue detail category.

5.10 LONGITUDINAL STIFFENERS [6.10.11.3]

Avoid the use of longitudinal stiffeners. If they must be used, the stiffener should be made continuous on one side of the web with transverse stiffeners located on the other side of the web. For aesthetic reasons, avoid placing transverse stiffeners on the exterior face of exterior girders.

Commentary: If longitudinal stiffeners are considered, an analysis of material and labor costs should be performed to justify their use. Their use may be justified on deep, haunched girders but normally cannot be justified on constant depth girders. When longitudinal stiffeners are used on the same side of the web as the transverse stiffeners, the intersection of the stiffeners must be carefully designed with respect to fatigue.

5.11 CONNECTIONS AND SPLICES [6.13] (Rev. 01/12)

A. Specify and detail bolted (not welded) field connections. Field welding of sole plates to bottom flanges of Steel I-Girders is permissible. Details shall be included in the plans in accordance with ***SDM*** 16.11. Other field welding is allowed only by prior written approval by the SDO or the appropriate DSDO and then, only when bolting is impractical or impossible.

B. Where cantilever brackets are connected to exterior girders and tie plates are used to connect the top flange of the bracket to the top flange of the floor beam, do not show the tie plates connected to the girder top flange. To account for alignment tolerances, detail short, slotted holes in the top flange of the cantilever brackets (perpendicular to the bracket web). Reduce the allowable bolt stress accordingly.

5.11.1 Slip Resistance [6.13.2.8]

A. Design bolted connections for Class A faying surface condition except as noted below. For weathering steel bridges that are not to be painted, design bolted connections for Class B faying surface condition.

B. When the thickness of the plate adjacent to the nut is greater than or equal to ¾ inch, base the strength of the connection on the bolt shear strength with threads excluded from the shear plane.

Commentary: This surface condition agrees with Florida fabrication practice.

5.11.2 Welded Connections [6.13.3]

A. Do not show a specific, pre-qualified, complete-joint penetration weld designation on the plans unless a certain type of weld; i.e., "V," "J," "U," etc., is required. See ***SDM*** Chapter 16, Structural Steel Girders.

Commentary: The fabricator should be allowed to select the type of complete-joint penetration weld to use, and should show all welds on the shop drawings.

B. On the plans, identify areas that are subject to tension and areas subject to stress reversal.

Commentary: This information will enable inspection personnel to identify the type and extent of testing required. Also, the shop drawings will further identify these areas.

C. When welding is required during rehabilitation or widening of an existing structure, show on the plans, the type of existing base metal. Advise the District Structures Design Office if the base metal type cannot be determined, or if the type is not an approved base metal included in the ANSI/AASHTO/AWS Bridge Welding Code. The State Materials Office and the Department's independent inspection agency will then determine the welding procedures and welding inspection requirements for the project.

5.11.3 Welded Splices [6.13.6.2]

A. At flange transitions, do not reduce the cross-sectional area by more than one-half the area of the larger flange plate.

Commentary: These proportions will allow a smooth flow of stress through the splice.

B. Maintain constant flange widths within each field-bolted section.

Commentary: By having constant width flange plates in a field section, the fabricator may order plates in multiples of the flange width, butt weld the plates full width, and then strip-out the flanges. Thus, the fabricator is required to make a minimum number of butt welds, handle a minimum number of pieces, and, thereby, minimize his fabrication costs.

C. The following criteria may be used to make a determination of the number of pounds, $\Delta\mathbf{w}$, of material that must be saved to justify the cost of introducing a flange transition:

1. For 36 ksi material: $\Delta\mathbf{w}$ = 300 + (25.0) x (area of the smaller flange plate, in^2)
2. For 50 ksi material: $\Delta\mathbf{w}$ = 250 + (21.3) x (area of the smaller flange plate, in^2)
3. For 70 ksi material: $\Delta\mathbf{w}$ = 220 + (18.8) x (area of the smaller flange plate, in^2)

D. In general, the number of flange splices within a field section should never be greater than two. It is more economical to extend a thicker plate in many instances because of the labor cost involved in making a splice.

E. Keep the flange plates of adjacent girders the same thickness where possible.

F. Size plates based on the rolled sizes available from the mills.

G. Keep the number of different plate thicknesses reasonable for the size of the project. Avoid sizing flange thicknesses in 1/8" increments.

5.12 CORROSION PROTECTION

A. Specify method of protection and locations on structure: uncoated weathering steel or High Performance Topcoat System. Other systems must be approved by the SDO or the DSDO. The final exterior finish color of a High Performance Topcoat system is an aesthetic treatment and must be approved by the DSDO.

B. Specify the interior of box girders be painted white. Use the sample "Painting" notes shown in ***SDM*** Chapter 5.

5.12.1 Environmental Testing for Site Specific Corrosion Issues

A. Site specific criteria that may require specialty corrosion protection systems:

1. Locations where the pH of the rainfall of condensation is less than 4 and greater than 10.
2. Locations subject to salt spray and salt laden run-off.
3. Locations subject to concentrated pollution caused by the following sources: coal burning power plant, phosphate plant, acid manufacturing plant, any site yielding high levels of sulfur compounds.

B. For sites with any of the above conditions, a review and recommendation from a Coating Professional is required to identify the appropriate corrosion control coating system.

5.12.2 Inorganic Topcoat System

This system has been discontinued and will be replaced with a single-coat inorganic zinc system when Specifications development work is completed.

5.12.3 High Performance Topcoat System

A. Specify a High Performance Topcoat System in accordance with ***Specification*** Section 975.

B. The standard color is a uniform gray similar to Federal Standard No. 595B, Color No. 36622. Other colors or a gloss finish must be approved by the DSDO.

5.12.4 Uncoated Weathering Steel

A. Design and specify weathering steel per the ***FHWA Technical Advisory T5140.22.***

B. Sites classified as Slightly Aggressive for Superstructures (See Figure 1.3.3-1) are suitable for the use of weathering steel without long-term, on-site panel testing.

C. Specify ASTM A325 Type 3 bolts for uncoated weathering steel.

D. Painting of the exterior girder/fascia may be required for aesthetic appearance.

5.12.5 Galvanizing (Rev. 01/12)

A. Galvanizing of Bolts for Bridges: Specify all anchor bolts, nuts, washers and other associated tie-down hardware to be hot-dip galvanized. Specify galvanized A325 bolts for connecting painted structural steel members on a project specific basis as directed by the District.

B. Galvanizing of Bolts for Miscellaneous Structures: Specify bolts for connecting structural steel members of miscellaneous structures such as overhead sign structures, traffic mast arms, ground-mounted signs, bridge mounted signs, etc. to be hot-dip galvanized.

Commentary: While ASTM A307 (coarse thread) bolts must be hot-dip galvanized, A325 (fine thread) bolts must be mechanically galvanized when they are required to be fully tensioned. Other applications not requiring full tensioning of the bolts may use hot-dip galvanized A325 bolts.

C. Specify all ladders, platforms, grating and other miscellaneous steel items to be hot-dip galvanized.

6 SUPERSTRUCTURE COMPONENTS

6.1 GENERAL

This Chapter contains information and criteria related to the design, reinforcing, detailing, and construction of bridge superstructure elements and includes deviations from ***LRFD***. This chapter covers erection schemes, beam and girder stability requirements, barriers, curbs, joints, bearings, and deck drains. For additional information on concrete beams, deck slabs, and steel girders, see ***SDG*** Chapter 4 and ***SDG*** Chapter 5.

6.2 CURBS AND MEDIANS [13.11]

A. For bridge projects that utilize curbs, match the curb height and batter on the roadway approaches. Bridges with sidewalks are usually encountered in an urban environment, and the curb height will normally be 6-inches.

B. When the roadway approaches have a raised median, design the bridge median to match that on the roadway.

6.3 TEMPERATURE MOVEMENT [3.12.2]

For all bridges other than longitudinally post-tensioned, segmental concrete bridges, calculate movement due to temperature variation (range) with an assumed mean temperature of 70 degrees Fahrenheit at the time of construction. Base joint and bearing design on the expansion and contraction for temperature ranges of ***SDG*** Table 2.7.1-1.

6.4 EXPANSION JOINTS

A. For new construction, use only expansion joint types listed in Table 6.4-1.

B. When an expansion joint is required, use one of the standardized expansion joints or details if possible. When a non-standardized expansion joint is required (e.g. finger joints and modular joints), design the joint using the following criteria:

Table 6.4-1 Expansion Joint Width Limitations by Joint Type

Expansion Joint Type	Maximum Open Width "W" (measured in the direction of travel at deck surface)
Hot Poured or Poured Joint without Backer Rod	3/4-inch
Poured Joint with Backer Rod	3-inches
Armored Elastomeric Strip Seal (Single gap)	Per ***LRFD*** [14.5.3.2]
Modular Joint (Multiple modular gaps)	Per ***LRFD*** [14.5.3.2]
Finger Joint	Per ***LRFD*** [14.5.3.2]

6.4.1 Expansion Joint Design Provisions [14.5.1]

A. Expansion joint open widths in sidewalks must meet all requirements of the Americans with Disabilities Act. Suitable cover plates can be used to meet this requirement.

B. In some instances, open expansion joints may be acceptable if provisions are made for diverting drainage without causing damage to the bridge bearings or other structural elements. The use of open expansion joints must have the prior approval of the SDO or DSDO.

6.4.2 Movement [14.4] [14.5.3]

The width, "**W**", of the joint must meet the requirements of ***LRFD*** [14.5.3.2], except that "**W**" for the different joint types must not exceed the appropriate value from Table 6.4-1. When designing and specifying in the Plans the joint opening at 70 degrees Fahrenheit, either the design width "**W**" must be decreased by the amount of anticipated movement due to creep and shrinkage, or the joint opening must be set to the minimum width for installing the joint, whichever results in the initial wider joint opening.

6.4.3 Expansion Joints for Bridge Widenings

A. Contact the District Structures Maintenance Office to determine the type and condition of all existing expansion joints on bridges that are to be widened. For the purposes of these requirements, existing expansion joint types defined by group are:

   1. Group 1: Armored elastomeric strip seal, compression seal, poured rubber, open joint, poured joint with backer rod, copper water-stop, and "Jeene."

   2. Group 2: Sliding Plate, finger joint, and modular.

   See specific requirements for these groups in the following sections.

B. When existing joints are to be extended into a bridge widening, determine the extent of existing concrete deck to be removed. Where required, limit removal of existing concrete to what is necessary to remove the existing joint armor and to permit proper anchorage of the new joint armor. Detail the existing joint removal and note that the Contractor must not damage the existing deck reinforcing steel when installing the new joint.

C. For all bridge widenings regardless of expansion joint type, include requirements in the Plans that all concrete spalls adjacent to existing expansion joints that are to remain are to be repaired. Include project specific details and notes as required.

6.4.4 Bridge Widenings - Group 1 Expansion Joints

A. If the existing expansion joint is an armored elastomeric strip seal and the edge rails and adjacent deck sections are in good condition, remove the existing elastomeric seal element, portions of the edge rails as required and upturned edge rail ends (if present), install new compatible edge rails in the widened portion of the bridge and provide a new continuous elastomeric seal element across the entire deck that is compatible with both the existing and new edge rails. Be aware of and make provisions in the Plans for the differences between the various proprietary strip seal expansion joints that have historically been used in Florida.

B. If the existing expansion joint is an armored compression seal and the armor and adjacent deck sections are in good condition, remove the existing compression seal, portions of the armor as required and upturned armor ends (if present), match the open joint width in the widened portion of the bridge and install a new poured joint with backer rod, poured rubber joint or leave the joint open. The use of joint armor in the widened portion of the bridge deck is not mandatory.

C. If the existing armored joint is in poor or irreparable condition, remove the existing seal and armor as required, repair or replace the damaged concrete and armor as required, and install a new Group 1 Joint other than a compression seal or copper water stop.

D. If the existing joint consists of poured rubber with or without a copper waterstop, remove the upper portion of the existing joint material as required to install a new poured joint with backer rod, extend the joint gap into the widening, and install a new poured joint with backer rod across the entire bridge width.

E. If the existing joint is a poured joint with backer rod that is performing satisfactorily, extend the joint gap into the widening and install a compatible poured joint with backer rod, header material, armor, etc., in the widening. Splice the new compatible poured joint onto the existing poured joint that is to remain in place. If the existing poured joint is not performing satisfactorily, determine the cause of the problem, evaluate the appropriateness of the continued use of a poured joint, and if appropriate use a poured joint with backer rod in the widening as described above. Include requirements and details for the repair or replacement of the existing poured joint, header material, armor, etc., as part of the construction of the bridge widening as necessary.

F. If the existing joint is an open joint and is performing satisfactorily as an open joint, extend the joint gap and open joint into the widening. If it is not performing satisfactorily, determine the cause of the problem, evaluate the appropriateness of the continued use of an open joint, and if appropriate extend the joint gap into the widening and use a poured joint with backer rod across the entire width of the bridge as described above.

G. If the existing joint is a Jeene Joint and is performing satisfactorily, extend the joint gap and any necessary blockouts, armor, headers, etc. into the widening, remove the existing Jeene Joint seal and provide a new continuous Jeene Joint seal across the entire width of the deck. If it is not practicable to install a new Jeene Joint, provide a new joint system from the Group 1 list other than a compression seal or copper water stop.

6.4.5 Bridge Widenings - Group 2 Joints

A. If the existing expansion joint is in good condition or repairable, extend it into the widened portion of the bridge using the same type of expansion joint. Include details for any needed repairs of the existing section of joint to remain and installation of new continuous seal elements as required. Require that lengthening be performed in conformance with the expansion joint manufacturer's recommendations. Be aware of and make provisions in the Plans for the differences between the various proprietary modular expansion joints that have historically been used in Florida.

B. If the existing expansion joint is proprietary and no longer available, it should be replaced with a Group 2 Joint that will accommodate the same calculated movement.

6.4.6 Post Tensioned Bridges

See ***SDG*** 4.6.6 Expansion Joints.

6.5 BEARINGS (Rev. 01/12)

A. Bridge bearings must accommodate the movements of the superstructure and transmit loads to the substructure supports. The type of bearing depends upon the amount and type of movement as well as the magnitude of the load.

B. In general, simple-span, prestressed concrete beams, simple-span steel girders, and some continuous beams can be supported on composite neoprene bearing pads (elastomeric bearings). Larger longitudinal movements can be accommodated by using PTFE polytetrafluoroethylene (Teflon) bearing surfaces on external steel load plates.

C. Structures with large bearing loads and/or multi-directional movement might require other bearing devices such as pot, spherical, or disc bearings.

D. For steel bridge bearings refer to AASHTO/NSBA Steel Collaboration Standard G9.1-2004 ***Guidelines for Steel Bridge Bearing Design and Detailing***. http://www.steelbridges.org/

E. Uplift restraints are undesirable and should only be considered when all other alternatives have been evaluated and only when approved by the SDO.

F. For segmental box bridges, provide a minimum of two bearings at the end of a unit or at the abutment.

G. Uplift on all bearing types is undesirable at Service and Strength Limit States, and requires SDO approval. The erection sequence shown in the plans must provide a statically stable support system that ensures the bearings are in compression for all construction load combinations. Uplift on reinforced elastomeric bearings, without bonded top and/or bottom load plates during construction, shall be limited and approved by the SDO on a case-by-case basis. For curved segmental bridges constructed in balanced cantilever, temporary bearing uplift may be avoided through the use of counterweights or tie-downs. See also ***SDM*** 20.9.1.

6.5.1 Design (Rev. 01/12)

A. For bridge bearings specify composite elastomeric bearing pads and other bearing devices that have been designed in accordance with ***LRFD*** Method B, the ***Specifications***, and this document. Specify elastomeric bridge bearing pads by thickness, area, lamination requirement and shear modulus. For normal applications, specify a shear modulus of either 0.110 ksi, 0.130 ksi or 0.150 ksi (at 73 degrees F). For unusual applications, the shear modulus may vary from 0.095 to 0.2 ksi (at 73 degrees F). Do not apply the 1.20 load factor in ***LRFD*** Table 3.4.1-1 to the thermal movements (TU) for elastomeric bearing pad design when using ***LRFD*** Method B to determine the total shear deformation in each direction per ***LRFD*** 14.7.5.3.2. Include the effects of Dynamic Load Allowance for Live Load.

B. For ancillary structures (sound walls, pedestrian or traffic railings, etc.) and plain elastomeric bearings as typically used on cast in place flat-slab bridges and for other applications, design pads in accordance with ***LRFD*** Method A, and specify by thickness, area (length and width), and hardness (durometer).

C. Whenever possible, and after confirming their adequacy, standard designs should be used. See ***Design Standards*** Index 20500 and 20510 and the associated ***Instructions for Design Standards (IDS)***, for standard composite elastomeric bearing pads. Only when the neoprene capacities of the standard pads have been exceeded or when site conditions or constraints dictate provisions for special designs (such as multi-rotational capability) should other bearing systems or components be considered. If other bearing systems or components are considered, the bearing types must be selected based on a suitability analysis. Comply with ***LRFD*** Table 14.6.2-1, Bearing Suitability, to select an appropriate bearing type. The special design requirements of ***LRFD*** covers specific material properties, mating surfaces, and design requirements such as coefficient of friction, load resistance, compressive stress, compressive deflection, and shear deformation, as applicable to the various bearing systems.

Commentary: If the resistance factor for a bearing is other than 1.0, the design calculations must include the method for obtaining such a factor.

D. For prestressed beams with grades greater than 2%, provide beveled bearing plates above the elastomeric bearings and design the bearing seat level. For beam grades less than or equal to 2%, slope the bearing seat to match the underside of the beam. Include the effects of beam grade and skew in determination of the beam seat slopes. For prestressed beams the effects of beam camber (determined at 120 days) and dead load deflection, may be neglected when the change in slope at the end of the beam due to these effects is less than 1.25%. For beam grades less than 0.5%, or for changes in elevation across the width and length of the bearing pad less than 1/8 inches, design the beam seat level. When possible, bearing seats at each end of a beam should have the same slope.

Commentary: The effects of static rotation (beam camber and dead load rotation) are not considered critical due to the propensity of the neoprene to creep over time and redistribute internal stresses. Additionally, inherent inaccuracies in the estimation of

beam cambers and the compensating effects of dead load and live load rotations generally do not warrant refinement in the calculation of beam seat slopes.

In lieu of a refined analysis, the rotation at the end of simple span prestressed beams from camber, dead load or live load deflection may be calculated using the following equation:

$$\text{Rotation} = 4\,(y_{mid} / L)$$

Where:

Rotation	=	*Rotation at end of beam (radians)*
y_{mid}	=	*Deflection at mid span (inches)*
L	=	*Span length between centerline of bearing (inches)*

6.5.2 Maintainability

A. The following provisions apply to all bridges with the exception of flat slab superstructures (cast-in-place or precast):

1. Design and detail superstructure using bridge bearings that are reasonably accessible for inspection and maintenance.
2. On all new designs make provisions for the replacement of bearings without causing undue damage to the structure and without having to remove anchorages or other devices permanently attached to the structure.
3. Design and detail provisions for the removal of bearings, such as jacking locations, jacking sequence, jack load, etc. Verify that the substructure width is sized to accommodate the jacks and any other required provisions. Simple span pretensioned Florida-I beams are exempt from this requirement.
4. When widening a bridge that does not already include provisions for replacing bearings, consult the District Maintenance Engineer who will decide if bearing replacement provisions must be made on the plans.

B. Certain non-conventional structures, such as steel girders or segmental concrete box girders, require separate details and notes describing jacking procedures. For steel I-girder bridges, design so that jacks are placed directly under girder lines. For steel box girder bridges, design so that jacks are placed directly under diaphragms. Always include a plan note stating that the jacking equipment is not part of the bridge contract.

Commentary: Few concrete I-beam bridges have required elastomeric bearing pad replacement. Occasional replacement of these pads does not justify requiring these provisions for every bridge.

6.5.3 Lateral Restraint

Determine if lateral restraint of the superstructure of a bridge is required and make necessary provisions to assure that the bridge will function as intended. These provisions include considerations for the effects of geometry, creep, shrinkage, temperature, and/or seismic on the structure. When lateral restraint of the superstructure is required, develop the appropriate method of restraint as described hereinafter.

A. Elastomeric Bearings: When the required restraint exceeds the capacity of the bearing pad, the following appropriate restraint must be provided:
   1. For concrete girder superstructures, provide concrete blocks cast on the substructure and positioned to not interfere with bearing pad replacement.
   2. For steel girder superstructures, provide extended sole plates and anchor bolts.

B. Mechanically Restrained Bearings: Bearings that provide restraint through guide bars or pintles (e.g., pot bearings), must be designed to provide the required lateral restraint. When unidirectional restraints are required, avoid multiple permanent unidirectional restraints at a given pier location to eliminate binding. Where multiple unidirectional restraints are necessary at a given pier, require bearings with external guide bars that are adjustable and include a detailed installation procedure in the plans or specifications that ensure that the guide bars are installed parallel to each other.

6.6 DECK DRAINAGE [2.6.6]

See ***SDM*** Chapter 22 for drainage requirements on bridges.

6.7 TRAFFIC RAILING [13.7] (Rev. 01/12)

6.7.1 General

A. Unless otherwise approved, all new bridge, approach slab and retaining wall mounted traffic railings, traffic railing/sound barrier combinations and traffic railing/ glare screen combinations proposed for use in new or temporary construction, resurfacing, restoration, rehabilitation (RRR) and widening projects must:
   1. Have been successfully crash tested to Test Level 4 (minimum), Test Level 5 or Test Level 6 criteria (as appropriate) in accordance with ***LRFD*** and either ***National Cooperative Highway Research Program (NCHRP) Report 350*** or ***Manual for Assessing Safety Hardware (MASH)*** for permanent installations.
   2. Have been successfully crash tested to Test Level 3 (minimum) in accordance with ***LRFD*** and either ***NCHRP Report 350*** or ***MASH*** for temporary installations shielding drop-offs.
   3. Have been successfully crash tested to Test Level 2 (minimum) in accordance with ***LRFD*** and either ***NCHRP Report 350*** or ***MASH*** for temporary installations shielding work zones without drop-offs (45 mph or less design speed).
   4. Meet the appropriate strength and geometric requirements of ***LRFD*** [13] for the given test levels and crash test criteria.
   5. Be upgraded on both sides of a structure when widening work is proposed for only one side and the existing traffic railing on the non-widened side does not meet the criteria for new traffic railings or the requirements of Section 6.7.1.C below.
   6. Be constructed on decks reinforced in accordance with ***SDG*** Chapter 4 for permanent installations on new construction, widenings and partial deck replacements.

7. Be constructed on decks and walls meeting the requirements of Section 6.7.4 for retrofit construction.
8. Be constructed and installed in accordance with the crash tested and accepted details for temporary installations.

B. The traffic railings shown on ***Design Standards*** Index Nos. 411-414, 420-425 and 470-483 have been determined to meet the applicable crash testing requirements and should be used on structures in Florida. The applicability of each of these standard traffic railings in permanent installations is addressed in the ***PPM***, Volume 1.

C. Evaluate existing installation of superseded FDOT Standard Traffic Railings and supporting bridge decks, wing walls and retaining walls as follows:

1. All superseded FDOT Standard Traffic Railings shown in the ***Instructions for Design Standards (IDS)***. Existing FDOT Traffic Railing Details are both structurally and functionally adequate. Refer to these drawings for information on existing "New Jersey Shape" and "F Shape" Traffic Railings.
2. Existing bridge decks, wing walls and retaining walls supporting traffic railings referenced in C.1 are considered to be both structurally and functionally adequate for resisting vehicular impact loads.
3. Traffic railings and existing bridge decks, wing walls and retaining walls referenced in C.1 and C.2 do not require a variation or an exception for vehicular impact loads.

6.7.2 Non-Standard or New Railing Designs

A. The use of a non-FDOT standard or new structure mounted traffic railing requires the prior approval of the Structures Design Office. Proposed modifications to standard traffic railings also require prior Structures Design Office approval. Such proposed modifications may include but are not limited to reinforcement details, surface treatments, material substitutions, geometric discontinuities, non-standardized attachments, end transition details and traffic face geometry.

B. Submit all proposed non-FDOT standard, new or modified structure mounted traffic railing designs to the Structures Design Office for review and possible approval. Make this submittal early in the design process preferably prior to submittal of the Typical Section Package.

C. A non-FDOT standard or new structure mounted traffic railing design may be approved by the Structures Design Office if it meets the requirements of No. 1 and Nos. 2, 3 or 4 below:

1. The Structures Design Office has determined that the design will provide durability, constructability, and maintainability equivalent to the standard FDOT traffic railing designs.
2. It has been successfully crash tested in accordance with ***NCHRP Report 350*** or ***MASH*** Test Level 4 (minimum) criteria for permanent installations and Test Level 2 or 3 criteria (as appropriate) for temporary installations.

3. It has been approved for specific uses by FHWA after evaluation of results from successful crash testing based on criteria that predate ***NCHRP Report 350*** or ***MASH*** Test Levels 2, 3 and 4 (as appropriate).
4. It has been evaluated by the Structures Design Office and identified as similar in strength and geometry to another traffic railing that has been successfully crash tested in accordance with ***NCHRP Report 350*** or ***MASH*** Test Level 4 (minimum) criteria for permanent installations and Test Level 2 or 3 criteria (as appropriate) for temporary installations.

*Commentary: The background for this policy is based on the Test Level Selection Criteria as defined in **LRFD** [13] and on historical construction costs and in-service performance of standard FDOT Test Level 4 traffic railings used in permanent installations. This background can be summarized as follows:*

1. In general, a greater potential exists for overtopping or penetrating a shorter height, lower test level traffic railing versus a similarly shaped Test Level 4 traffic railing. This potential is further aggravated on tall bridges and on bridges over intersecting roadways or water deep enough to submerge an errant vehicle. Vehicle performance during higher speed impacts is also more critical on lower test level traffic railings.

2. Little construction cost savings can be realized by using a lower test level traffic railing. In some cases, particularly with the more elaborate or ornate traffic railing designs, initial construction costs and long term repair and maintenance costs could actually be greater than those for a standard FDOT Test Level 4 design.

3. Aesthetically pleasing and open Test Level 4 designs are available for use where appropriate.

4. On bridges and retaining walls with sidewalks where special aesthetic treatments are desired or required, the use of an aesthetic pedestrian railing located behind a Test Level 4 traffic railing is a more appropriate solution. The aesthetics of the traffic railing should complement the pedestrian railing.

D. For more detailed information on FDOT structure mounted traffic railings, refer to the ***Design Standards***. For additional information about crash-tested traffic railings currently available or about traffic railings currently under design or evaluation, contact the Structures Design Office.

E. Use the traffic railing surface texture guidelines given below for the selection of proposed texturing of the traffic face of 32-inch and 42-inch Vertical Face Traffic Railings and the upper vertical portion of the Traffic Railing/Sound Barrier combination. Maintain ***SDG*** 1.4 concrete cover requirements at the point of deepest relief. Modify standard concrete products to maintain the proper cover but do not modify the geometry of the traffic face of the railing.

1. Sandblasted textures covering the majority of the railing surface with a maximum relief of 3/8-inches.
2. Images or geometric patterns inset into the face of the railing 1-inch or less and having 45-degree or flatter chamfered or beveled edges to minimize vehicular sheet metal or wheel snagging.

3. Textures or patterns of any shape and length inset into the face of the railing up to 1/2-inch deep and 1-inch wide and having 60-degree or flatter chamfered or beveled edges to facilitate form removal.
4. Any texture or pattern with gradual undulations (e.g. cobblestone) that has a maximum relief of 3/4-inch over a distance of one foot.

F. Patterns or textures must be cast into or otherwise integral with the traffic face or top of traffic railings. Do not specify textures, patterns or features, e.g. brick, stone, or tile veneers, etc. on the traffic face or top of traffic railings that have to be attached as a separate element. Such features may be considered for attachment to the back face of traffic railings and pedestrian railings on a project by project basis in locations not over or directly beside other travelways.

*Commentary: The above guidelines for concrete railing texturing will not adversely affect the **NCHRP Report 350** or **MASH** test level of the railing to which a texture or pattern is applied. However, it is clear from crash test results that textured railings can result in more vehicular body damage in a crash due to increased friction even if crash performance remains within acceptable limits.*

Aesthetic attachments to the back of the traffic railing may become dislodged when the railing is impacted and create a hazard to roadways located under or beside the structure. For this reason, aesthetic attachments shall not be used on the back of railings located over or directly beside other travelways. Railings with aesthetic features generally cannot be slip formed resulting in increased construction time and cost.

The selection of a proposed railing texture or pattern should take into account the overall aesthetic concept of the structure, maintainability of the feature and the long service of the structure. Shapes of traffic railings create the major aesthetic impression, colors, textures, and patterns are secondary. Form liners that try to imitate small scale detail are wasted at highway speeds but may be appropriate for areas with pedestrian traffic.

6.7.3 FHWA Policy

A. Since September 1, 1986, the Federal Highway Administration (FHWA) has required highway bridges on the National Highway System (NHS) and the Interstate Highway System to have crash-tested railing. Current policy is stated in the following documents:

1. "Transportation Equity Act for the 21st Century" (TEA-21), Public Law 105-178 (June 9, 1998)

   "Reauthorization of TEA-21" (resulting in SAFETEA-LU, Public Law 109-59, August 10, 2005)

   SAFETEA-LU establishes a new core Highway Safety Improvement Program that is structured and funded to make significant progress in reducing highway fatalities. It creates a positive agenda for increased safety on our highways by almost doubling the funds for infrastructure safety and requiring strategic highway safety planning, focusing on results.

2. National Cooperative Highway Research Program (NCHRP) Report 350, Recommended Procedures for the Safety Performance Evaluation of Highway Features.

   http://safety.fhwa.dot.gov/roadway_dept/policy_guide/road_hardware/nchrp_350/

   Provides guidance for testing highway features to assess safety performance of those features. Guidance includes definitions of crash-test levels with specified vehicle, speed, and impact angle for each level.

3. May 30, 1997, memorandum from Dwight Horne on the subject of "Crash Testing of Bridge Railings."

   http://safety.fhwa.dot.gov/roadway_dept/policy_guide/road_hardware/barriers/bridgerailings/docs/bridge.pdf

   Identifies 68 crash-tested bridge rails, consolidating earlier listings and establishing tentative equivalency ratings that relate previous testing to ***NCHRP Report 350*** test levels.

4. July 25, 1997 memorandum from Donald Steinke on the subject of "Identifying Acceptable Highway Safety Features."

   http://safety.fhwa.dot.gov/roadway_dept/policy_guide/road_hardware/policy_memo/memo072597/memo072597.pdf

   Clarifies and summarizes policies on bridge traffic railing, points to authorities for requiring testing of bridge traffic railing, and identifies methods for submitting new rails for testing. This document also identifies exceptions, one of which is the replacement or retrofitting of existing bridge traffic railing unless improvements are being made on a stretch of highway that includes a bridge with obsolete railing.

5. November 20, 2009 memorandum from David A. Nicol outlining the FHWA implementation plan for the adoption of ***Manual for Assessing Safety Hardware (MASH)***

   http://safety.fhwa.dot.gov/roadway_dept/policy_guide/road_hardware/policy_memo/memo112009/memo112009.pdf

   Details the implementation of ***MASH*** on the NHS and addresses the continued use of ***NCHRP Report 350*** compliant roadside safety hardware.

B. On its web site, FHWA provides current information on three general categories of roadside hardware that are tested and evaluated using ***NCHRP Report 350*** criteria; one of those categories is Bridge Railing. See Bridge Railings at:

   http://safety.fhwa.dot.gov/roadway_dept/policy_guide/road_hardware/barriers/bridgerailings/index.cfm

6.7.4 Existing Obsolete Traffic Railings (Rev. 01/12)

A. General

1. FDOT promotes highway planning that replaces or upgrades non-crash tested traffic railing on existing bridges to current standards, or that at least increases the strength or expected crash performance of these traffic railings. FDOT has developed two sets of ***Design Standards***, Index 470 and 480 Series, for retrofitting existing structures with traffic railing types that have performed well in crash tests and are reasonably economic to install. Detailed instructions and procedures for retrofitting obsolete traffic railings on existing structures using ***Design Standard*** Index 470 and 480 Series are included in the ***Instructions for Design Standards (IDS)***.

2. For RRR projects, existing bridge traffic railing retrofits constructed in accordance with 1987 through 2000 ***Design Standards***, Index 401, Schemes 1 and 19 Concrete Safety Barrier and Scheme 16 Guardrail Continuous Across Bridge and their accompanying approach and trailing end guardrail treatments may be left in place provided they meet the criteria set forth in the ***PPM***, Volume 1, Sections 25.4.25.3 and 25.4.26.2. Detailed instructions and procedures for retrofitting obsolete guardrail transitions using Design Standard Index 403 are included in the ***Instructions for Design Standards (IDS)***.

3. When rehabilitation or renovation work is proposed on an existing structure with traffic railings that do not meet the criteria for new or existing railings as provided above, replace or retrofit the existing traffic railings to meet the crash-worthy criteria unless an exception is approved. Refer to Chapter 23 of the ***PPM***, Volume 1, for information about exceptions.

*Commentary: The obsolete standard entitled Guardrail Anchorage and Continuous Barrier for Existing Bridges, Index 401, was included in the **Design Standards** from 1987 until 2000. Schemes 1 and 19 of this standard entitled Concrete Safety Barrier are based on a design that has been crash tested as documented in **Transportation Research Report TRP-03-19-90** and accepted by FHWA at **NCHRP Report 350** Test Level 4. Scheme 16 of this standard entitled Guardrail Continuous Across Bridge has been structurally evaluated and has been determined to be acceptable to FDOT and FHWA to leave in place on RRR projects provided the installation meets the criteria given herein.*

Specify in the Plans the necessary upgrades to the existing guardrail transitions as follows.

*For the w-beam approach transition shown as Detail J in the 1987 edition of the **Design Standards**, Index 400 without a continuation of curb beyond the bridge or approach slab, use the following Plan Sheet note placed adjacent to bridge ends:*

> *Construct Transition Block, nested W Beam Guardrail and additional Guardrail Posts and Offset Blocks as shown in **Interim Design Standards** Index 403.*

*For the nested w-beam approach transition shown as Detail J in the 1987 edition of the **Design Standards**, Index 400 with a continuation of curb beyond the bridge or approach slab, use the following Plan Sheet note placed adjacent to bridge ends:*

> *Construct nested W Beam Guardrail and additional Guardrail Posts and Offset Blocks as shown in **Interim Design Standards** Index 403.*

*For the nested w-beam approach transition shown as Detail J in the 1998 edition of the **Design Standards**, Index 400 without a continuation of curb beyond the bridge or approach slab, use the following Plan Sheet note placed adjacent to bridge ends:*

> *Construct Transition Block as shown in **Interim Design Standards** Index 403.*

For all trailing end treatments, specify the necessary guardrail upgrades as appropriate.

B. FHWA Policy on Existing Traffic Railings

The FHWA requires that bridge railing on the National Highway System (NHS) meet requirements of ***NCHRP Report 350***:

"all new or replacement safety features on the NHS covered by the guidelines in the ***NCHRP Report 350*** that are included in projects advertised for bids or are included in work done by force-account or by State forces on or after October 1, 1998, are to have been tested and evaluated and found acceptable in accordance with the guidelines in the ***NCHRP Report 350*** " (See Section 6.7.3, Number 4).

However, FHWA softens this requirement somewhat by allowing exceptions:

"Bridge railings tested and found acceptable under other guidelines may be acceptable for use on the NHS." This is a specific reference to the Horne memo titled "Crash Testing of Bridge Railings" (See Section 6.7.3, Number 3.)

"The FHWA does not intend that this requirement (that new safety features installed on the NHS be proven crashworthy in accordance with the guidelines in the ***NCHRP Report 350***) result in the replacement or upgrading of any existing installed features beyond what would normally occur with planned highway improvements."

This statement is qualified by a requirement that states have a "rational, documented policy for determining when an existing non-standard feature should be upgraded."

C. Traffic Railing Retrofit Concepts and Standards

Existing non-crash tested traffic railings designed in accordance with past editions of the AASHO and ***AASHTO Standard Specifications for Highway Bridges*** will likely not meet current crash test requirements and will also likely not meet the strength and height requirements of ***LRFD***. The retrofitting of these existing non-crash tested traffic railings reduces the separate but related potentials for vehicle snagging, vaulting and/or penetration that can be associated with many obsolete, non-crash tested designs.

The Thrie Beam Guardrail Retrofit and Vertical Face Retrofit ***Design Standards***, Index 470 and 480 Series, respectively, are suitable for retrofitting specific types of obsolete structure mounted traffic railings. These retrofits provide a more economical

solution for upgrading obsolete traffic railings when compared with replacing the obsolete traffic railings and portions of the existing bridge decks or walls that support them. As these retrofits do not provide for any increase in clear width of roadway, and in a few cases decrease clear width by approximately 2 inches, they should only be considered for use on structures where adequate lane and shoulder widths, sight distances and transition lengths are present. The potential effects of installing a retrofit should be evaluated to ensure that the accident rate will not increase as a result. Detailed guidance and instructions on the design, plans preparation requirements and use of these retrofits is included in the ***Instructions for Design Standards (IDS)***.

When selecting a retrofit or replacement traffic railing for a structure that will be widened or rehabilitated, or for a structure that is located within the limits of a RRR project, evaluate the following aspects of the project:

1. Elements of the structure.
   a. Width, alignment and grade of roadway along structure.
   b. Type, aesthetics, and strength of existing railing.
   c. Structure length.
   d. Potential for posting speed limits in the vicinity of the structure.
   e. Potential for establishing no-passing zones in the vicinity of the structure.
   f. Approach and trailing end treatments (guardrail, crash cushion or rigid shoulder barrier).
   g. Strength of supporting bridge deck or wall.
   h. Load rating of existing bridge.
2. Characteristics of the structure location
   a. Position of adjacent streets and their average daily traffic.
   b. Structure height above lower terrain or waterway.
   c. Approach roadways width, alignment and grade.
   d. Design speed, posted speed, average daily traffic and percentage of truck traffic.
   e. Accident history on the structure.
   f. Traffic control required for initial construction of retrofit and for potential future repairs.
   g. Locations and characteristics of pedestrian facilities / features (if present).
3. Features of the retrofit designs
   a. Placement or spacing of anchor bolts or dowels.
   b. Reinforcement anchorage and potential conflicts with existing reinforcement, voids, conduits, etc.
   c. Self weight of retrofit railing.
   d. End treatments.
   e. Effects on pedestrian facilities.

D. Evaluation of Existing Supporting Structure Strength for Traffic Railing Retrofits.

The Thrie Beam Guardrail and Vertical Face traffic railing retrofits are based on designs that have been successfully crash tested in accordance with ***NCHRP Report 350*** to Test Level 4 or have been previously tested and then accepted at Test Level 4. The original designs have been modified for use with some of the wide variety of traffic railings and supporting deck and wing wall configurations that were historically constructed on Florida bridges. In recognition of the fact that the traffic railings and supporting elements were designed to meet the less demanding requirements of past AASHO and AASHTO Bridge Specifications, modifications have been made to the original retrofit designs in order to provide for better distribution of vehicle impact force through the traffic railing retrofit and into the supporting bridge deck or wing wall. For Thrie Beam Guardrail Retrofit installations on narrow curbs and or lightly reinforced decks or walls, a smaller post spacing is used on bridge decks. In addition, through-bolted anchors are used for some Thrie Beam Guardrail Retrofit installations. For the Vertical Face Retrofit, additional longitudinal reinforcing steel and dowel bars at the open joints are used within the new railing.

Existing bridge decks and walls that will support a traffic railing retrofit must be evaluated to determine if sufficient strength is available to ensure that the retrofit will perform in a manner equivalent to that demonstrated by crash testing. Existing structures may contain Grade 33 reinforcing steel if constructed prior to 1952 or Grade 40 reinforcing steel if constructed prior to 1972. Use 90% of the ultimate tensile strength of these materials when determining the existing capacity for both tension and moment from traffic railing impacts ($\mathbf{f_s}$ = 49.5 ksi for Grade 33, $\mathbf{f_s}$ = 60 ksi for Grade 40). For existing structures containing Grade 60 reinforcing steel, only use the yield strength of this material ($\mathbf{f_s}$ = 60 ksi). For bridges with varying spacings and sizes of transverse reinforcing steel in the deck or curb, the average area of transverse steel for the span may be used.

Existing cast-in-place reinforced concrete bridge decks shall be analyzed at a section through the deck at the gutter line for the appropriate FDOT traffic railing retrofit Standard Indexes using the following design values:

Traffic Railing Type	Design Standards Index No.	M_g	T_u
Thrie-Beam Retrofit	471,475, & 476	5.8	4.7
Thrie-Beam Retrofit	472 & 474	8.3	6.7
Thrie-Beam Retrofit	473	9.7	7.9
Vertical-Face Retrofit	481-483	12.9	7.5

$\mathbf{M_g}$ (kip-ft/ft) - Ultimate deck moment at the gutter line from the traffic railing impact.

$\mathbf{T_u}$ (kip/ft) - Total ultimate tensile force to be resisted.

The following relationship must be satisfied at the gutter line:

$$(\mathbf{T_u}/\phi\mathbf{P_n}) + (\mathbf{M_u}/\phi\mathbf{M_n}) \leq \mathbf{1.0} \qquad \text{[Eq. 6-1]}$$

Where:

ϕ = 1.0

$\mathbf{P_n} = \mathbf{A_s f_s}$ (kips/ft) - Nominal tensile capacity based on the areas of transverse reinforcing steel in both the top and bottom layers of the deck ($\mathbf{A_s}$) and the nominal reinforcing steel strength ($\mathbf{f_s}$). This reinforcing steel must be fully developed at the critical section through the deck at the gutter line.

$\mathbf{M_u}$ = Total ultimate deck moment from traffic railing impact and factored dead load at the gutter line. ($\mathbf{M_g}$**+1.00***$\mathbf{M_{Dead\ Load}}$) (kip/ft/ft).

$\mathbf{M_n}$ = Nominal moment capacity at the gutter line determined by traditional rational methods for reinforced concrete (kip-ft/ft). The bottom layer of steel must not be included unless a strain compatibility analysis is performed to determine the steel stress in this layer with the compressive strain in the concrete limited to 0.003.

Decks constructed of longitudinally prestressed, transversely post-tensioned voided or solid slab units generally only contain minimal transverse reinforcing ties. Retrofitting bridges with this type of deck requires approval from the State Structures Design Engineer. For these type bridges, the strength checks of the deck at the gutter line will not be required. Only ***Design Standards*** 475 or 480 series retrofits should be used to retrofit these bridges.

In addition to checking the existing deck capacity at the gutter line, the following minimum areas of reinforcing steel per longitudinal foot of span must also be satisfied unless a more refined analysis is performed to justify a lesser area of steel at these locations:

Minimum Steel Area (in^2/ft) for Design Standards Index No.					
Reinforcing Steel Location	**Grade**	**471,475 & 476**	**472 & 474**	**473**	**481 - 483**
Transverse in top of curb beneath post	33	0.32	0.4	0.4	NA
	40 & 60	0.25	0.31	0.31	NA
Vertical in face of curb for thickness "**D**"	33	0.2	2.25/(D-2)[1]	2.65/(D-2)[1]	3.30/(D-2)[1]
	40 & 60	0.20[2]	1.80/(D-2)[1]	2.10/(D-2)[1]	2.60/(D-2)[1]

1 Minimum area of reinforcing steel must not be less than 0.16 square inches/foot.
Where: **D** (inches) = Horizontal thickness of the curb at the gutter line.

2 0.16 sq inches/foot is acceptable for **D** equal to or greater than 15-inches.

If the minimum areas of reinforcing in the curb given above are not satisfied, the following design values may be used for a refined analysis of the existing curb beneath the post for the Design Standards Index 470 Series retrofits:

Traffic Railing Type	Design Index No.	M_p	T_u
Thrie-Beam Retrofit	471, 475 & 476	9.7	7.9
Thrie-Beam Retrofit	472, 473, & 474	12	9.9

$\mathbf{M_p}$ (kip-ft/ft) - Ultimate deck moment in the curb at centerline of post from the traffic railing impact.

$\mathbf{T_u}$ (kip/ft) - Total ultimate tensile force to be resisted.

The following relationship must be satisfied in the curb at centerline of post:

$$(\mathbf{T_u}/\phi\mathbf{P_n}) + (\mathbf{M_u}/\phi\mathbf{M_n}) \leq \mathbf{1.0} \qquad \text{[Eq. 6-2]}$$

Where:

ϕ = 1.0

$\mathbf{P_n} = \mathbf{A_s f_s}$ (kips/ft) - Nominal tensile capacity based on the areas of transverse reinforcing steel in both the top and bottom layers of the deck ($\mathbf{A_s}$) and the nominal reinforcing steel strength ($\mathbf{f_s}$). This reinforcing steel must be fully developed at the critical section.

$\mathbf{M_u}$ = Total ultimate deck moment in the curb from traffic railing impact and factored dead load at centerline of post ($\mathbf{M_g + 1.00 * M_{Dead\ Load}}$) (kip/ft/ft).

$\mathbf{M_n}$ = Nominal moment capacity of the curb at centerline of post determined by traditional rational methods for reinforced concrete (kip-ft/ft). The bottom layer of steel in the curb must not be included unless a strain compatibility analysis is performed to determine the steel stress in this layer with the compressive strain in the concrete limited to 0.003.

The ultimate moment capacity of existing wing walls and retaining walls supporting the traffic railing retrofits must not be less than 9.7 kip-ft/ft for Index 470 Series retrofits (3'-1½" maximum post spacing) and 12.0 kip-ft/ft for Index 480 Series retrofits. Wing walls for Index 480 Series retrofits must also be a minimum of 5 feet in length and pile supported. For Index 480 Series retrofits only, wing walls that do not meet these criteria must not be used to anchor the ends of guardrail transitions and must be shielded by continuous guardrail as shown on the ***Design Standards***. For both 470 and 480 Series retrofits, retaining walls must be continuous without joints for a minimum length of 10 feet and adequately supported to resist overturning.

An exception will be required for bridges or components of bridges that do not meet the preceding strength requirements. The potential for damage to the existing bridge deck or wing walls due to a very severe crash, such as that modeled by full scale crash testing, may be acceptable in specific cases. Contact the Structures Design Office for additional guidance and assistance in these cases.

6.7.5 Historic Bridges

A. Federal Law protects Historic Bridges and special attention is required for any rehabilitation or improvement of them. The Director of the Division of Historical Resources of the Florida Department of State serves as Florida's State Historic Preservation Officer (SHPO). The SHPO and FDOT are responsible for determining what effect any proposed project will have on a historic bridge. See the ***PPM***, Volume 1, Chapter 26.

B. Bridges that are designated historic or that are listed or eligible to be listed in the National Register of Historic Places present a special railing challenge because the appearance of the bridge may be protected even though the historic railing may not meet current standards. When a project is determined to involve a historically significant bridge, contact the Structures Design Office for assistance with evaluating the existing bridge railings.

C. Original railing on a historic bridge is not likely to meet:

   1. Current crash test requirements.
   2. Current standards for railing height (a minimum of 32-inches for Test Level 4) and for combination traffic and pedestrian railings.
   3. Current standards for combination traffic and pedestrian railings, e.g. a minimum height of 42-inches and the limit on the size of openings in the railing (small enough that a 6-inch diameter sphere cannot pass.)

D. Options for upgrading the railing on historic bridges usually include the following:

   1. Place an approved traffic railing inboard of the existing railing, leaving the existing railing in place. This is sometimes appropriate when a pedestrian walkway exists on or is planned for the bridge.
   2. Replace the existing railing with an approved, acceptable railing of similar appearance.
   3. Remove the current railing and incorporate it into a new acceptable railing. This may be appropriate in rare instances where an existing railing is especially decorative.
   4. Design a special railing to match the appearance of the existing railing. It may not be necessary to crash test the new railing if the geometry and calculated strength equal or exceed a crash tested traffic railing.

6.7.6 Requirements for Test Levels 5 and 6 [13.7.2]

A. Consider providing a traffic railing that meets the requirements of Test Levels 5 or 6 when any of the following conditions exist:

1. The volume of truck traffic is unusually high.
2. A vehicle penetrating or overtopping the traffic railing would cause high risk to the public or surrounding facilities.
3. The alignment is sharply curved with moderate to heavy truck traffic.

B. Contact the SDO for guidance if a Test Level 5 or 6 traffic railing is being considered.

6.7.7 Exceptions

A. In the rare event that an upgrade to the traffic railing on an existing bridge could degrade rather than improve bridge safety, during the early phases of a project consult the Structures Design Office about a possible design exception.

B. Factors to consider include the following:

1. Remaining time until scheduled replacement or major rehabilitation of structure.
2. Design speed and operating speed of traffic in the structure location, preferably no greater than 45 mph.
3. Resistance to impact of the existing railing.
4. Whether the structure ends are intersections protected by stop signs or traffic signals.
5. Whether the geometry is straight into, along and out of the structure.
6. Overall length of the structure.
7. Whether traffic on the structure is one-way or two-way.
8. Accident history on the structure, including damages to and repairs of the existing railing.
9. Risk of fall over the side of the structure.
10. Whether the bridge has an intersecting roadway or railroad track below.
11. Whether a railing upgrade will further narrow an already narrow lane, shoulder or sidewalk.
12. Load rating of the existing bridge.
13. Special historic or aesthetic concerns.

C. Exceptions to the requirements of this Article must be approved in accordance with Chapter 23 of the ***PPM***, Volume 1.

6.7.8 Miscellaneous Attachments to Traffic Railings (Rev. 01/12)

See ***PPM***, Volume 1, Section 7.1.2.

6.7.9 Impact Loads for Railing Systems with Footings or on Retaining Walls [13.7.3.1.2] (Rev. 01/12)

For sizing the moment slab for TL-3 and TL-4 traffic railings constructed with footings or on to top of retaining walls, use the following methodology.

A. Sliding of the Traffic Railing-Moment Slab

The factored nominal static sliding resistance ($\varphi \mathbf{R_n}$) to sliding of the traffic railing-moment slab system along its base shall satisfy the following condition (see Figure 1):

$$\varphi \mathbf{R_n} \geq \gamma \mathbf{F_{ts}}$$

where:

φ = resistance factor (0.8, ***LRFD*** Bridge Design Specifications Table 10.5.5-1)

$\mathbf{R_n}$ = nominal static sliding resistance (kips)

γ = load factor (1.0, extreme event)

$\mathbf{F_{ts}}$ = equivalent transverse static impact load (10 kips)

The nominal static sliding resistance ($\mathbf{R_n}$) shall be calculated as:

$$\mathbf{R_n} = W \tan \varphi_s$$

where:

W = weight of the monolithic section of traffic railing-moment slab between joints (with an upper limit of 60 ft) plus any pavement or backfill material laying on top of the moment slab

φ_s = friction angle of the soil–moment slab interface (°)

B. Overturning of the Traffic Railing-Moment Slab

The factored nominal static moment resistance ($\varphi \mathbf{M_n}$) of the traffic railing–moment slab system to overturning shall satisfy the following condition (see Figure 1):

$$\varphi \mathbf{M_n} \geq \gamma \mathbf{F_{ts}} \mathbf{h_A}$$

where:

φ = resistance factor (0.9)

$\mathbf{M_n}$ = nominal static sliding resistance (kips)

γ = load factor (1.0, extreme event)

F_{ts} = equivalent transverse static impact load (10 kips)

h_A = moment arm taken as the vertical distance from the point of impact due to the dynamic force to the point of rotation A

The nominal static moment resistance M_n shall be calculated as:

$$M_n = W\, l_A$$

where:

W = weight of the monolithic section of traffic railing-moment slab between joints (with an upper limit of 60 ft) plus any pavement or backfill material laying on top of the moment slab

l_A = horizontal distance from the center of gravity of the traffic railing-moment slab W to the point of rotation A

Figure 6.7.9-1Traffic Railing-Moment Slab System (Sliding and Overturning)

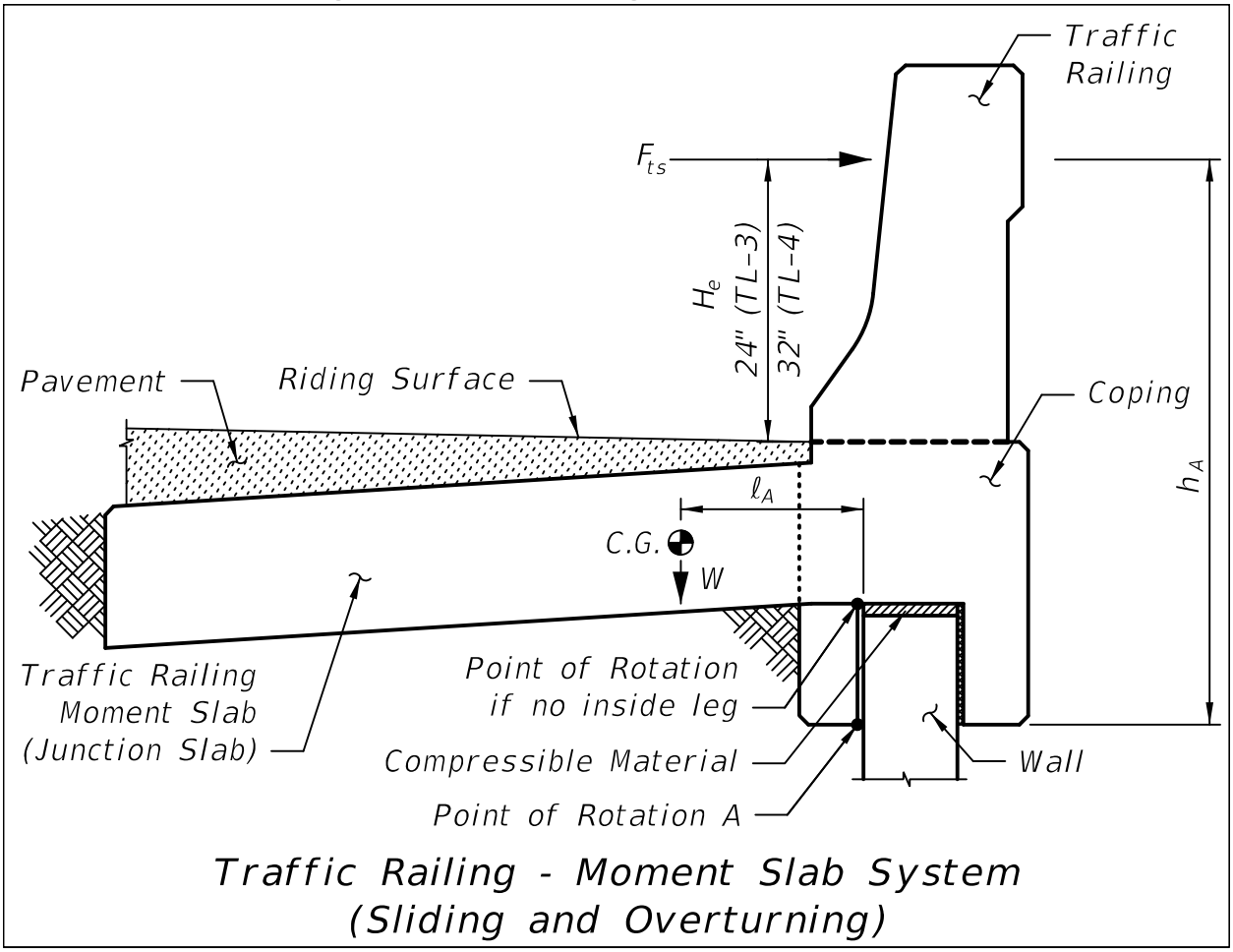

6.8 ERECTION SCHEME AND BEAM/GIRDER STABILITY (Rev. 01/12)

For all steel girder, segmental beam or box girder bridges, and C.I.P. box girder bridges on falsework, include in the plans a workable erection scheme that addresses all major phases of erection. Show required temporary support locations and associated loads assumed in design. Coordinate temporary support locations with the Traffic Control Plans. See ***PPM***, Volume 1, Article 10.4. For all bridges, investigate the stability of beams or girders subjected to wind loads during construction. See ***SDG*** 4.3.4 for plan requirements for pre-tensioned beams. For the evaluation of stability during construction use wind loads, limit states and temporary construction loads included in ***SDG*** 2.4 and ***LRFD***. Show maximum vertical displacements of the temporary supports in the plans as required for fit up, alignment, and stability, or where excessive settlements would affect stresses of the permanent structure. For information not included in the ***SDG*** or ***LRFD***, refer to the ***AASHTO Guide Design Specifications for Bridge Temporary Works*** and the ***AASHTO Construction Handbook for Bridge Temporary Works***.

Commentary: Investigate superstructure stability at all major phases of construction consistent with the erection scheme shown in the plans. The contractor is responsible for evaluating the stability of individual components during erection. Shallow foundations for temporary supports may not be appropriate under certain circumstances due the impacts of settlement on the permanent structure.

6.9 BRIDGES WITH SIDEWALKS OR TRAFFIC SEPARATORS (Rev. 01/12)

Design bridges with traffic separators or sidewalks located behind traffic railings for the governing of the following two cases:

1. The initial design configuration with traffic and pedestrian live load, and traffic railing, traffic separator and pedestrian railing dead loads present (as applicable), or,
2. The possible future case where the traffic separator or traffic railing between the travel lanes and the sidewalk is removed (as applicable), and vehicular traffic is placed over the entire deck surface (no pedestrian loads present).

Commentary: In the future, the sidewalk or traffic separator could be simply eliminated in order to provide additional space to add a traffic lane. For bridges with sidewalks, two options are viable:

1. Construct a second traffic railing at the back of the sidewalk instead of a standard Pedestrian / Bicycle Railing as part of the original bridge construction. A vertical face traffic railing is preferred for this application if ADA compliant handrails are required due to the grade of the sidewalk. Design the cantilever within the sidewalk deck area to resist vehicle impact forces and wheel loads.

2. Construct a standard Pedestrian / Bicycle Railing as part of the original construction of the bridge and then demolish it and replace it with a traffic railing when necessary. If the deck cantilever is adequately reinforced to resist vehicle impact forces and wheel loads, only the railing needs to be replaced. Dowel the new vertical steel into the deck.

7 WIDENING AND REHABILITATION

7.1 GENERAL

7.1.1 Load Rating (Rev. 01/12)

A. Before preparing widening or rehabilitation plans, review the inspection report and the existing load rating. If the existing load rating is inaccurate or was performed using an older method (e.g. Allowable Stress or Load Factor), perform a new ***LRFR*** load rating (***MBE*** Section 6, Part A) of the existing bridge in accordance with ***SDG*** 1.7. If any ***LRFR*** design inventory or any FL120 Permit rating factors are less than 1.0, calculate rating factors using ***LFR*** (***MBE*** Section 6, Part B). If any ***LRFR*** or ***LFR*** inventory load rating factors are less than 1.0, a revised load rating may be performed using one of the additional procedures in C.1, C.2, C.3, or C.4 to obtain a satisfactory rating. If any ***LFR*** inventory rating factors remain less than 1.0, replacement or strengthening is required unless a Design Variation is approved (see section B). Calculate ratings for all concrete box girders (segmental) using only ***LRFR*** (***MBE*** Section 6, Part A).

B. Design bridge widening or rehabilitation projects in accordance with ***SDG*** 7.3 and load rate in accordance with ***SDG*** 1.7. Do not isolate and evaluate the widened portion of the bridge separately from the rest of the bridge. After preparing widening or rehabilitation plans, if any ***LRFR*** design inventory or any FL 120 permit rating factors (***MBE*** Section 6, Part A) are less than 1.0, calculate rating factors using ***LFR*** (***MBE*** Section 6, Part B). If any ***LFR*** inventory rating factors remain less than 1.0, replacement or strengthening is required unless a Design Variation is approved. If any ***LRFR*** or ***LFR*** inventory load rating factors are less than 1.0, a revised load rating may be performed using one of the additional procedures in C.1, C.2, C.3, or C.4 to obtain a satisfactory rating.

C. Additional procedures may be performed to obtain a satisfactory inventory load rating. Only one of the following is allowed per rating factor.

   1. Approximate Method of Analysis: When using ***LRFD*** approximate methods of structural analysis and live load distribution factors, a rating factor of 0.95 may be rounded up to 1.0 for the existing portion of the bridge.
   2. Refined Method of Analysis: Refined methods of structural analyses (e.g. using finite elements) may be performed in order to establish an enhanced live load distribution factor and improved load rating. For continuous post-tensioned concrete bridges, a more sophisticated, time-dependent construction analysis is required to determine overall longitudinal effects from permanent loads.
   3. Shear Capacity - Segmental Concrete Box Girder - Crack Angle (***LRFD*** [5.8.6]): To calculate a crack angle more accurately than the assumed 45 degree angle used in ***LRFD***, use the procedure found in Appendix B of "Volume 10 Load Rating Post-Tensioned Concrete Segmental Bridges" (dated Oct. 8, 2004) found on the Structures Design Office website.

4. Service Limit State: If a Service Limit State rating factor is less than 1.0 and the current bridge inspection is showing no signs of either shear or flexural cracking, the capacity may be established using the Strength Limit State. Submit a Design Variation for a Service Limit State inventory load rating factor of less than 1.0 to the State Structures Design Engineer.

D. See Figure 7.1.1-1 for a flow chart of the widening/rehabilitation decision making process.

Figure 7.1.1-1 Widening / Rehabilitation Load Rating Flow Chart

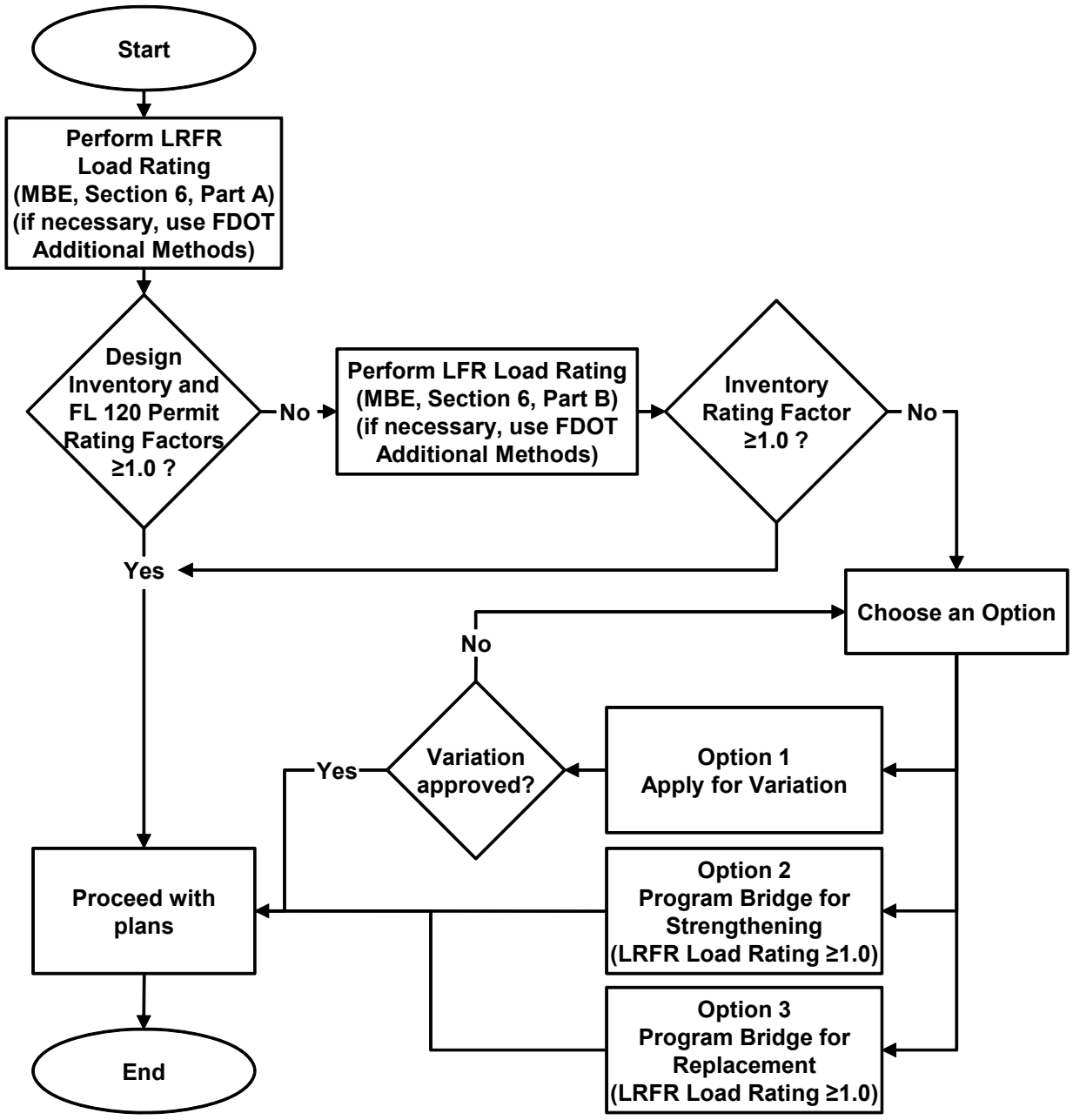

E. Use a consistent load rating method for the entire bridge and report the lowest controlling rating factor for each limit state. When evaluating the existing and widened portions of the completed bridge, report the lowest controlling rating factor and location.

Commentary: Bridge widening and rehabilitation projects require major capital expenditures therefore it is appropriate to update existing bridges within the project to the current design specification. Because of heavy traffic and high volumes of overweight permit vehicles, variations should be considered only for bridges off the National Highway System.

7.1.2 Bridge Deck

A. Evaluate existing beam and girder supported decks for the temporary partially demolished condition.

B. For existing decks designed using the empirical deck design, and where the distance from the centerline of the exterior girder or exterior box web to the saw-cut line of the overhang is less than 5.0 times the existing deck thickness per ***LRFD*** [9.7.2.4], restrict traffic from the following locations:

- the first outer bay for I beam superstructures; or
- over the exterior beam for Florida-U Beam superstructures; or
- over the exterior box for steel box girder superstructures.

C. See also ***SDG*** Chapter 4.

7.1.3 Expansion Joints

See ***SDG*** Chapter 6.

7.1.4 Traffic Railing

See ***SDG*** Chapter 6.

7.2 CLASSIFICATIONS AND DEFINITIONS

7.2.1 Major Widening

A "Major Widening" is new construction work to an existing bridge facility which doubles the total number of traffic lanes or bridge deck area of the existing bridge facility. The area to be calculated is the transverse coping-to-coping dimension.

7.2.2 Minor Widening

A "Minor Widening" is new construction work to an existing bridge facility that does not meet the criteria of a major widening.

Commentary: The term "facility" describes the total number of structures required to carry a transportation route over an obstruction. In this context, adding two lanes of traffic to one bridge of twin, two-lane bridges would be a minor widening because the total number of lanes of resulting traffic, (six) in the finished "facility" is not twice the sum number of lanes of traffic, (four), of the unwidened, existing twin bridges.

7.3 ANALYSIS AND DESIGN

7.3.1 Aesthetics

A. Design widenings to match the aesthetic level of the existing bridge.

B. Additions to existing bridges should not be obvious "add-ons".

C. Consider specifying a Class 5 Finish coating for the existing bridge.

7.3.2 Materials

Materials used in the construction of the widening should have the same thermal and elastic properties as those of the existing structure.

7.3.3 Load Distribution

A. See ***SDG*** 2.9.C.

B. When determining the distribution of the dead load for the design of the widening, and when performing stress checks of the existing structure, consider the construction sequence and degree of interaction between the widening and the existing structure after completion.

7.3.4 Design Specifications

A. Design all widenings and rehabilitations in accordance with ***LRFD***.

B. Review stresses in the main exterior member of the existing structure for construction conditions and the final condition; i.e., after attachment of the widened portion of the structure. When computations indicate overstresses in the exterior member of the existing structure, request a variation from the appropriate FDOT Structures Design Office.

7.3.5 Overlays

A. Generally, asphalt overlays on bridge decks should be removed except where the overlay is part of the original design. When an asphalt overlay is to be removed, add the following General Note to the plans:

"Use extreme care when removing asphalt from the existing bridge deck. Repair any damage at no cost to the Department."

B. For existing bridges with water spread drainage issues that may require sloping overlays consult with the District Structures Design Engineer.

7.3.6 Substructure (Rev. 01/12)

As with any bridge structure, when selecting the foundation type and layout for a bridge widening, consider the recommendations of the District Geotechnical Engineer. For bridges over water, also consider the effects from scour per SDG 3.3 with input from the District Drainage Engineer.

7.3.7 Other Special Considerations (Rev. 01/12)

A. When detailing connections and selecting or permitting construction methods, consider the amount of differential camber present prior to placing the new deck.

B. Avoid open or sealed longitudinal joints in the riding surface (safety hazards).

C. See ***SDG*** 4.2.14 for deck construction requirements.

D. Refer to ***SDG*** Chapter 6 for bearing requirements.

E. Provide ample clearance between proposed driven piles and existing piles, utilities, or other obstructions. This is especially critical for battered piles.

F. Bearing fixity and expansion devices should be the same in both the widened and existing bridges.

G. See ***SDG*** 4.3.4 for prestressed beam temporary bracing requirements.

7.4 ATTACHMENT TO EXISTING STRUCTURE

7.4.1 Drilling

A. When drilling into heavily reinforced areas, specify exposure of the main reinforcing bars by chipping.

B. Specify that drilled holes have a minimum edge distance of three times the metal anchor diameter (**3d**) from free edges of concrete and 1-inch minimum clearance between the edges of the drilled holes and existing reinforcing bars.

C. Specify core drilling for holes with diameters larger than 1½-inches or when necessary to drill through reinforcing bars.

D. Adhesive Anchor Systems must be SDO approved and comply with the criteria and requirements of ***SDG*** Chapter 1.

7.4.2 Dowel Embedments

Ensure that reinforcing bar dowel embedments meet minimum development length requirements whenever possible. If this is not possible (e.g., traffic railing dowels into the existing slab), the following options are available:

A. Reduce the allowable stresses in the reinforcing steel by the ratio of the actual embedment divided by the required embedment.

B. If embedded anchors are used to develop the reinforcing steel, use Adhesive Anchor Systems (See ***SDG*** 1.6) designed in accordance with ***SDG*** Chapter 1.

7.4.3 Surface Preparation

Specify that surfaces be prepared for concreting in accordance with "Removal of Existing Structures" in Sections 110 and 400 of the ***Specifications***.

7.4.4 Connection Details

A. Figure 7.4.4-1, Figure 7.4.4-2, Figure 7.4.4-3 and Figure 7.4.4-4 are details that have been used successfully for bridge widenings for the following types of bridge superstructures.

B. Flat Slab Bridges (Figure 7.4.4-1): A portion of the existing slab should be removed in order to expose the existing transverse reinforcing for splicing. If the existing reinforcing steel cannot be exposed, the transverse slab reinforcing steel for the widening may be doweled directly into the existing bridge without meeting the normal splice requirement. When splicing to the existing steel is not practical, Adhesive Anchor Systems (See ***SDG*** 1.6), designed in accordance with ***SDG*** Chapter 1, must be utilized for the slab connection details as shown in Figure 7.4.4-1 and Figure 7.4.4-4.

C. T-Beam Bridges (Figure 7.4.4-2): The connection shown in Figure 7-3 for the slab connection is recommended. Limits of slab removal are at the discretion of the EOR but subject to the Department's approval.

D. Steel and Concrete Girder Bridges (Figure 7.4.4-3): The detail shown in Figure 7.4.4-3 for the slab connection is recommended for either prestressed concrete or steel beam superstructures.

Commentary: These figures are for general information and are not intended to restrict the EOR in his judgment.

Figure 7.4.4-1 Flat Slab Widening

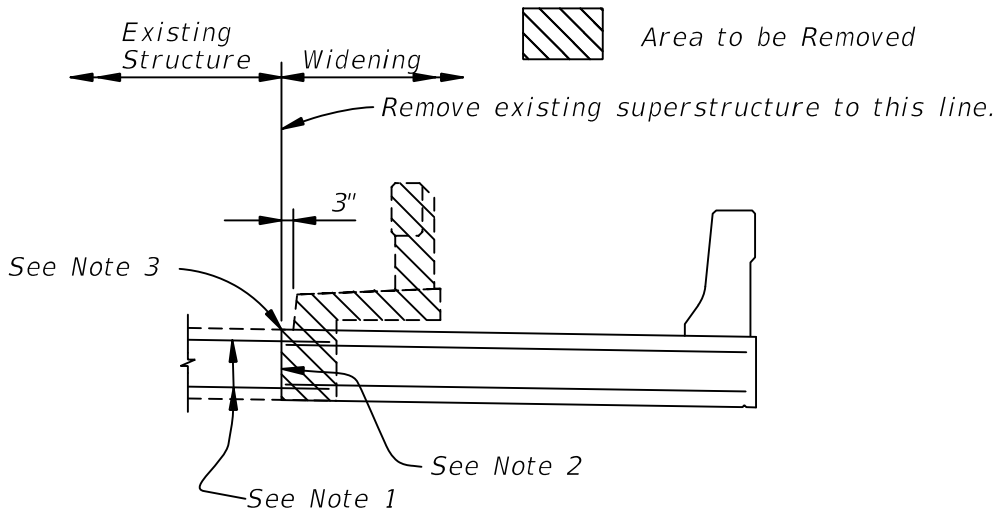

NOTES:

1. Existing transverse reinforcing to remain in place. Clean bars, straighten and embed into the slab widening. If bars are broken or otherwise determined to be unsatisfactory by the Engineer, replace with dowel bars as shown in Figure 7.4.4-4.

2. Clean all contacting surfaces between the old and new concrete immediately before casting concrete.

3. Score concrete for full length of span by sawing to top of reinforcing. Avoid damaging reinforcing steel during sawing operation and slab removal.

WIDENING DETAIL FOR FLAT SLAB SUPERSTRUCTURE

Figure 7.4.4-2 Monolithic Beam and Slab Widening

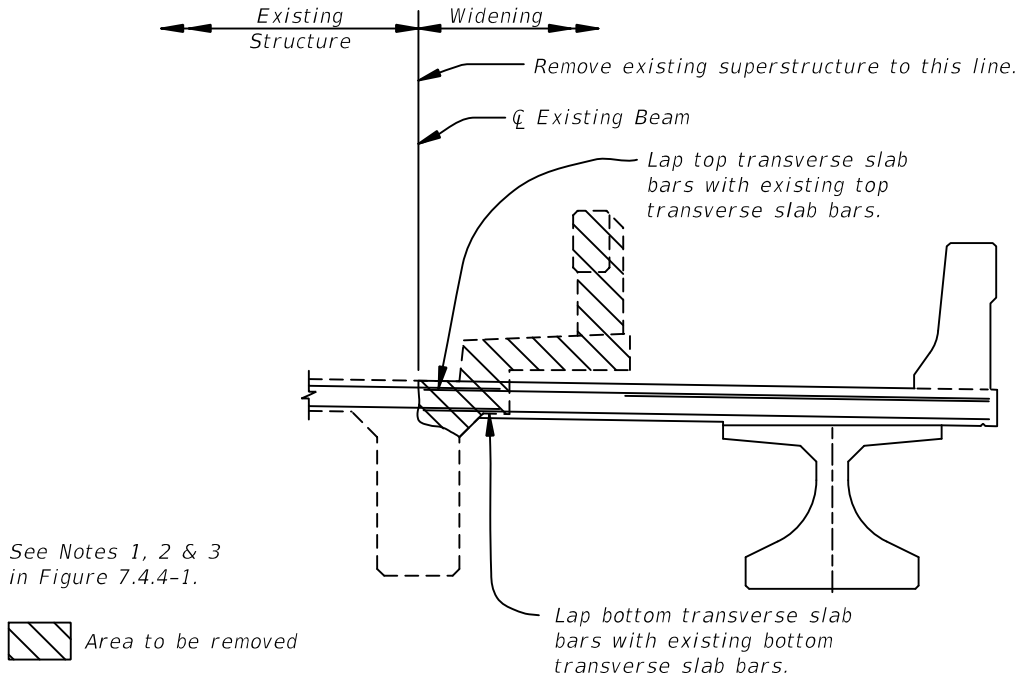

WIDENING DETAIL FOR MONOLITHIC BEAM AND SLAB SUPERSTRUCTURE

Figure 7.4.4-3 AASHTO Beam Superstructure Widening

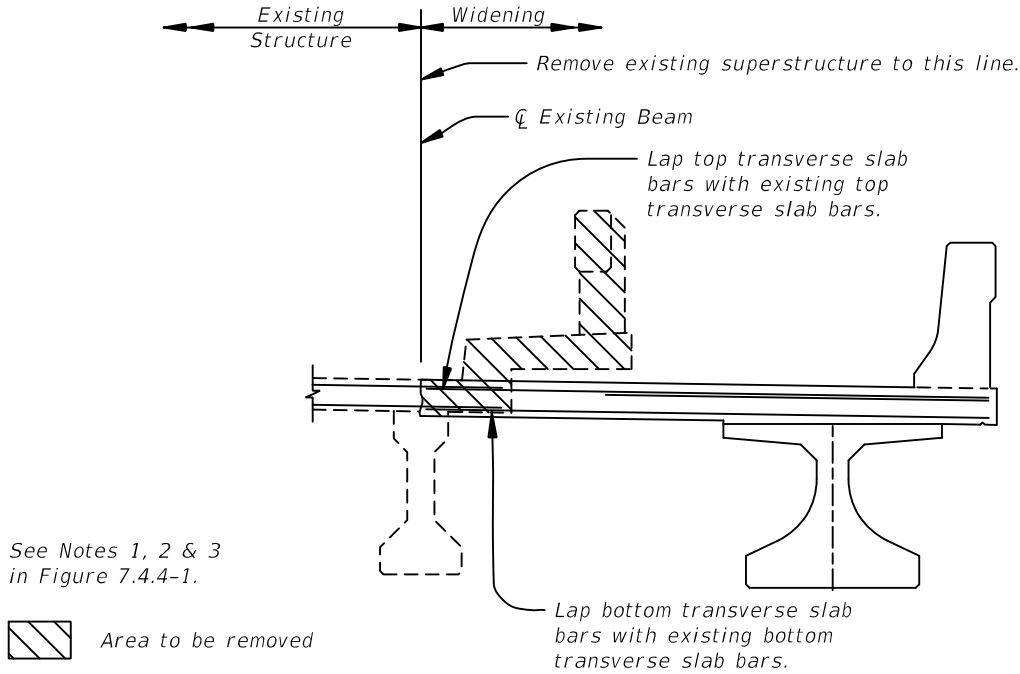

WIDENING DETAIL FOR AASHTO BEAM SUPERSTRUCTURE

Figure 7.4.4-4 Dowel Installation

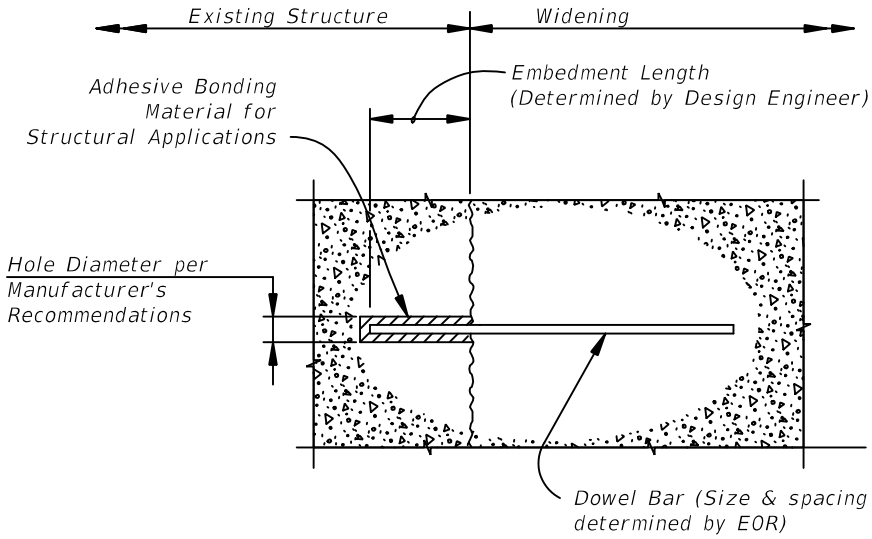

NOTES:

1. Verify that holes for Dowel Bars are thoroughly clean and dry prior to placing bonding material.
2. Comply with Sections 416 & 937 of the Specifications.
3. Shift dowel hole locations if existing reinforcing steel is encountered.

WIDENING DETAIL SHOWING DOWEL INSTALLATION

7.5 CONSTRUCTION SEQUENCE

A. Show on the preliminary plans, a construction sequence which takes into account the Traffic Control requirements.

B. Submit Traffic Control Plans for traffic needs during construction activities on the existing structure such as installation of new joints, deck grooving, etc.

C. Include in the final plans, a complete outline of the order of construction along with the approved Traffic Control Plans. Include details for performing any necessary repairs to the existing bridge.

7.6 WIDENING RULES (Rev. 01/12)

A. For the design of bridge widening adhere to the following criteria:

1. For widening AASHTO, Bulb-T, and cast-in-place concrete beam bridges, use Florida-I beams. For all other widenings, use the same superstructure type and depth where possible.

Commentary: The increased span and load carrying capacity of the Florida-I will allow designers to widen bridges using shallower beam depth than existing beams. For example the designer can use FIB 54 to widen an existing AASHTO type V bridge.

2. Avoid mixing concrete and steel beams in the same span.
3. Coordinate the use of non-standard height prestressed concrete beams with the DSDE.

Commentary: So as to preserve the shape of the side forms used to construct standard beams, the standard beam heights should not be decreased by reducing the web, bottom or top flange heights, or increased by increasing the web or bottom flange heights. The top flange height can be increased or the entire top flange can be eliminated without changing the shape of the standard side forms.

4. Where the existing bridge does not satisfy current vertical clearance requirements and where the economics of doing so are justified, the superstructure must be elevated and/or the under passing roadway must be lowered as part of the widening project.

Commentary: The stated clearance criteria are particularly important for bridges that have a history of frequent superstructure collisions from over-height vehicles.

B. The transverse reinforcement in the new deck should be spaced to match the existing spacing. Different bar sizes may be used if necessary.

C. Voided-slab bridges require special attention. Contact the DSDE for guidance. The DSDE will coordinate with the SDO to establish recommendations and criteria for the widening of the particular structure.

D. For all widenings, confirm that the available existing bridge plans depict the actual field conditions. Notify FDOT's Project Manager of any discrepancies which are critical to the continuation of the widening design.

E. For widenings of overpass structures, contact the District Structures Maintenance Office for a history of overheight vehicle impacts.

Commentary: In general, confirming the agreement of existing plans with actual field conditions should be included as part of any new survey. A structural engineer must be involved in checking that the existing plans agree with actual field conditions for items such as:

Bridge location, pier location, skew angle, stationing.
Span lengths.
Number and type of beams.
Wing wall, pier, and abutment details.
Utilities supported on the bridge.
Finished grade elevations.
Vertical and horizontal clearances.
Other features critical to the widening.

F. When widening with Florida-I beams, squaring Florida-I beam ends, placing bearing pads orthogonally and eliminating permanent end diaphragms are the preferred options. However, skewed beam ends, skewed bearing pads and end diaphragms may be used at the discretion of the DSDE.

G. Where the existing bridge uses end diaphragms and diaphragms are proposed for the widening, connect the new diaphragm to the existing diaphragm. Drill and epoxy rebar into the adjacent existing diaphragm. Do not drill into existing beams.

7.7 DECK GROOVING

A. For widened superstructures where at least one traffic lane is to be added, contact the DSDO for direction regarding grooving of the existing and new bridge deck sections.

B. For projects with shoulder widening only, add a note to the plans specifying that the bridge floor finish match that of the existing bridge deck surface. If the existing bridge deck surface is in poor condition, contact the DSDO for direction.

C. Contact the SDO for guidance for the required bridge surface finish for unusual situations or for bridge deck surface conditions not covered above.

D. For all new construction utilizing cast-in-place bridge deck (floors) that will not be surfaced with asphaltic concrete, include the following item in the Summary of Pay Items:

Item No. 400-7 - Bridge Floor Grooving Sq. Yards

E. Quantity Determination: Determine the quantity of bridge floor grooving in accordance with the provisions of Article 400-22.3 of the ***Specifications***.

F. Specify penetrant sealers after grooving existing bridge decks with all the following conditions:

1. The existing bridge deck does not conform to the current reinforcing steel cover requirement.
2. The superstructure environment is Extremely Aggressive due to the presence of chlorides.
3. The existing deck is to be grooved.

G. Do not specify penetrant sealers for new / widened portions of bridge structures or if the existing deck is not to be grooved.

7.8 REPAIR OR STRENGTHENING USING CARBON FIBER REINFORCED POLYMERS

7.8.1 System Selection

FRP composite systems used in repair or strengthening shall have carbon as the primary reinforcement (CFRP). Whether a precured laminate or wet layup system is used, the resin and adhesive shall be a thermoset epoxy formulation specifically designed to be compatible with the fibers or precured shapes.

7.8.2 Design

The design of CFRP systems is considered a Category 2 structure and the plans and specifications shall be reviewed and approved by the Structures Design Office for this repair portion of the project. Design shall conform to ACI Committee 440.2R-02 ("Guide for the Design and Construction of Externally Bonded FRP Systems for Strengthening Concrete Structures" American Concrete Institute, ACI 440.2R-02, 2002, 45 pp.) except as noted herein. Loads shall be obtained using ***LRFD***.

A. Replace "PART 3 - RECOMMENDED CONSTRUCTION REQUIREMENTS" with the following:

   Section II of National Cooperative Highway Research Program Report (NCHRP) 514 (Mirmiran, A., Shahawy, M., Nanni, A., Karbhari, V., (2004) "Bonded Repair and Retrofit of Concrete Structures Using FRP Composites, Recommended Construction Specifications," Transportation Research Board, 102 pp.)

B. Modify Section 8.2 as follows:

   When a single girder in a span containing at least four similar girders is strengthened then the following limit shall control:

$$(\phi \mathbf{R_n})^{\mathbf{Existing}} \geq (\mathbf{1.2S_{DL}} + \mathbf{0.85S_{LL}})$$

   where $(\phi \mathbf{R_n})^{\mathbf{Existing}}$ is the capacity of the existing member considering ONLY the existing reinforcement, $\mathbf{S}_{DL}$ and $\mathbf{S_{LL}}$ are the unfactored dead load and live load effects, respectively, that occur after the member has been strengthened. When multiple girders in a single span are strengthened then the following limit shall control:

$$(\phi \mathbf{R_n})^{\mathbf{Existing}} \geq (\mathbf{1.2S_{DL}} + \mathbf{1.0S_{LL}})$$

   If the existing reinforcement is insufficient to satisfy this equation, then alternative means of strengthening or replacement of the structure shall be implemented. This check shall be conducted using load factors and capacity reduction factors from the ***LRFD***.

C. Modify Section 8.3.1 as follows:

   An environmental reduction factor $\mathbf{C_E = 0.85}$ shall be used for all bridge applications.

D. Replace equation 9-5 with:

$$\phi = 0.9 \text{ when } \frac{c}{d_t} < 0.375$$

$$\phi = 0.7 + 0.2\left[\frac{1}{c/d_t} - \frac{5}{3}\right] \text{ when } 0.600 \le \frac{c}{d_t} \le 0.375$$

$$\phi = 0.7 \text{ when } \frac{c}{d_t} > 0.600$$

where **c** is the distance from extreme compression fiber to neutral axis when the section is at capacity and $\mathbf{d_t}$ is the distance from extreme compression fiber to centroid of extreme layer of longitudinal tension steel.

E. Modify Section 9.4 as follows:

Stresses in existing reinforcement (using equation 9-6) shall be checked using Service I Load Combination from ***LRFD***.

F. Modify Section 9.5 as follows:

Use the standard fatigue truck from ***LRFD*** to check fatigue stresses in CFRP composites. Allowable fatigue stresses in prestressing or mild steel shall be checked using Chapter 5 of the ***LRFD***.

G. Modify Section 9.6 as follows:

Strength of nonprestressed concrete sections repaired with CFRP composites shall be calculated using the equations given in Section 9.6. Strength of prestressed sections repaired with CFRP composites shall be calculated using equilibrium and strain compatibility. Regardless of method, the strain in the CFRP composites at ultimate capacity shall not exceed the bond critical limit given in equation 9-3.

H. Modify Chapter 10 as follows:

Shear strengthening shall be restricted to one of the following methods. The first is with a completely wrapped element as illustrated in Fig. 10.1 of the ACI 440.2R-02. U-wraps may also be used only if the termination of the wrap is anchored to prevent debonding. The anchorage system shall have been tested to ensure the system will behave similar to the fully wrapped system.

I. Modify Chapter 12 as follows:

In addition to the requirements in Section 12.1.12, transverse CFRP reinforcement shall be provided at the termination points of each ply of CFRP flexural reinforcement. In addition, transverse reinforcement shall be provided at a maximum spacing of **d** along the length of the member from end to end of the CFRP reinforcement. Alternatively, 0-90 degree fabric shall be permitted, which when wrapped up into the web can provide simultaneous transverse and longitudinal strengthening. The width of the transverse reinforcement at the termination shall measure at least **¾d** along the member axis and shall have at least 30% of the capacity as that of the flexural reinforcement. Intermediate transverse reinforcement shall have a minimum length of **d/4**.

7.8.3 Construction

The Engineer of Record shall develop Technical Special Provisions for Construction and quality control that conform to the specifications given in Section II of National Cooperative Highway Research Program Report (NCHRP) 514 (Mirmiran, A., Shahawy, M., Nanni, A., Karbhari, V., (2004) "Bonded Repair and Retrofit of Concrete Structures Using FRP Composites, Recommended Construction Specifications," Transportation Research Board, 102 pp.) except as noted herein.

In wet layup systems, shear and flexural reinforcement shall have no more than three layers. This does not include anchorage requirements listed in ***SDG*** 7.8.2.

Technical Special Provisions shall be non-proprietary, multi-vendor solutions (2 minimum), reviewed and approved by the State Specifications Offices and the State Structures Design Office.

8 MOVABLE BRIDGES

8.1 GENERAL

This chapter contains information and criteria related to the design of movable bridge projects. It sets forth the basic Florida Department of Transportation (FDOT) design criteria that are exceptions and/or additions to those specified in the ***AASHTO LRFD-Movable Highway Bridge Design Specifications***, Second Edition, 2007 and any interim releases thereafter and herein referred to as ***LRFD-MHBD Specifications***. Where applicable, other sections of this ***SDG*** also apply to the design of movable bridges.

8.1.1 Applicability

A. The design criteria of this chapter are applicable for new bridges and the electrical/ machinery design for rehabilitation of existing bridges. The requirements for structural rehabilitation will be determined on a bridge-by-bridge basis, based on evaluations during the Bridge Development Report (BDR) phase and approval by the Structures Design Office (SDO). Projects for which the criteria are applicable will result in designs that preferably, provide new bascule bridges with a "two leafs per span" configuration.

Commentary: Single leaf bascules are not allowed, but may be considered for small channel openings where navigational and vehicular traffic is low and with approval from the SDO.

B. Examine and evaluate alternative bridge configurations offering favorable life cycle cost benefits. Consider improved design or operational characteristics providing advantage to the traveling public. Incorporate design and operational features which are constructible and which can be operated and maintained by the Department's forces. Maintain consistency of configuration, when feasible, for movable bridges throughout the State.

C. Provide drive systems for new bascule bridges consisting of electric motors with gears. See ***SDG*** 8.1.2.

Commentary: Assure reliable operation of movable bridges through redundancy features in drive and control systems, for both new and rehabilitation projects.

D. Non-counterweighted or reduced counterweighted bascule leaf designs are not permitted. Design a concrete counterweight with drained pockets for counterweight blocks (concrete, cast-iron or steel). Predominately steel-slab counterweight systems are not permitted unless they are encapsulated in concrete. (See ***SDG*** 8.5.3)

E. Provide clearances to accommodate thermal expansion of leaf.

F. Design trunnion assemblies, support systems and drive machinery, accounting for potential (future) weight changes to the bascule leaf. (See ***SDG*** 8.5.1)

G. Design deck grading and leaf rear joints to protect machinery (including trunnion assemblies) from rain and dirt. Provide gutters to drain water away from machinery areas and provide seals at deck joints. Shield trunnions and bearings when required.

H. Closed concrete decks with partial filled grating using light weight concrete or similar system are required for new bridges. Connect closed deck systems to framing members using shear connectors and full-depth concrete.

I. Show location of all temporary bracing required for stability prior to the deck placement.

8.1.2 Redundancy

A. Include recommendations for redundant drives and control systems in the BDR/30% plans submittal. For bridges having low rates of anticipated bridge openings or average daily traffic, application of redundant drive and control systems may not be cost effective. In this event, submit such information in the BDR and provide appropriate recommendations for omission of redundant systems.

Commentary: Redundant drive configurations include:

1. *Hydraulic drive systems for bridge rehabilitations operated by multiple hydraulic cylinders. In these systems, a pump drive motor or its hydraulic pump can be isolated and bridge operations can continue while repairs are accomplished.*
2. *Gear driven systems that may be driven through one gear train into a single rack of a two-rack bridge.*

B. Provide two rack drives actuated by dual motor drive systems either of which will be capable of operating the bridge leaf. Normal operation of this configuration will involve operation of one drive/motor system. Provide an alternator to alternate drives/ motors for each opening. Specify dual drives (single drives powering both motors are not allowed).

C. Do not use Master/Slave configurations for Example 2 above. Either drive shall be able to be taken off-line without affecting the operation. Provide central control allowing A, B, or A+B operation.

D. Rehabilitations: Design hydraulic cylinder actuated drive to function in spite of loss of a main pump motor, hydraulic pump, or drive cylinder. Design the system to include all necessary valves, piping, equipment and devices, to permit safe and expeditious changeover to the redundant mode. Specify a permanent plaque displayed in a convenient location on the machinery platform describing actions (valve closures and openings, electrical device deactivation, etc.) necessary for operation in the redundant mode.

E. When operating with either a single rack drive or asymmetric hydraulic cylinder forces applied to the leaf, design the structure for Movable Bridge - Specific load combinations, strength BV-I and BV-II. Reduce the load factors for strength BV-I to 1.35 from 1.55 [Table 2.4.2.3-1].

8.1.3 Trunnion Support Systems for New Bridges

A. Provide trunnion support systems as follows: (see ***SDG*** 8.5.1 and ***SDG*** 8.9)

1. Simple, rotating trunnion configuration, with bearing supports, on towers, on both inboard and outboard sides of the trunnion girder.
2. Sleeve bearings are permitted for use on small bascule bridges only and must be approved by the SDO at the BDR phase. Design constraints and cost justification must be provided.
3. Design trunnion supports on each side of the main girder with similar stiffness vertically and horizontally.

B. Provide concrete trunnion columns; do not use steel trunnion towers.

8.1.4 Vertical Clearance Requirements

Design bascule leaf for unlimited vertical clearance between the fenders in the full open position. Any encroachment of the leaf into the horizontal clearance zone must receive favorable Coast Guard review prior to approval of the BDR.

8.1.5 Horizontal Clearance Requirements

Design all movable bridges over navigable waterways to provide up to 110 ft. horizontal clearance as required by the United States Coast Guard (USCG) and the Army Corps of Engineers. Clearances over 110 ft. between fenders must be approved by the State Structures Design Engineer.

Commentary: Since 1967 the exclusive control of navigable waters in the U.S. has been under the direction of the USCG. The USCG is required to consult with other agencies, which may have navigational impacts, before approving USCG permits for bridges over navigable waterways. The USCG was contacted by the Army Corps of Engineers expressing their needs for a wider channel along the Miami River, due to future dredging operations proposed by the Army Corps. After consultation between FDOT, USCG and the Army Corps it was agreed that a 110 ft. horizontal channel clearance, between fenders, would be provided on future crossings of the Miami River in locations designated as navigable. This requirement for movable bridges would also apply to other waterways, which might be subject to dredging by the Army Corps to maintain water depths. The 110 ft. clearance was established as equal to the Army Corps of Engineers designs for locks along the major rivers in the United States. It is anticipated that where no known dredging operations are required by the Army Corps, smaller horizontal clearances as established by the USCG and published in the Federal Registry will still be permitted by the USCG. Since the cost of movable bridges vary roughly by the square of the span length, these smaller horizontal clearances should be submitted for approval where dredging is not anticipated. The USCG and Army Corps of Engineers has committed to working with the FDOT before making the final decision on required clearances.

8.1.6 Bridge Operator Parking

Provide two parking spaces for bridge operators in all new bridge designs, on the control house side of the bridge.

8.1.7 Definitions and Terms

A. Auxiliary Drive: Hand crank, gearmotor with disconnect-type coupling, portable hydraulic pump, drill, etc., that can be used to lower leafs for vehicular traffic or raise the leafs for marine traffic if the main drives fail.

B. Creep Speed: Not more than 10% of full speed, final creep speed will be determined by bridge conditions.

C. Emergency Stop: Leaf stops within (3±1) seconds of depressing the EMERGENCY STOP push-button or in the event of a power failure. All other rotating machinery stops instantly.

D. End-of-Travel Function: Contact connection where a closed contact allows operation and an open contact stops operation (i.e., leaf limit switches).

E. Fully Seated: Leaf is at rest on live load shoes, interlock OK to drive span locks.

F. Fully Open: Tip of leaf clears fender of a vertical line as defined by Coast Guard.

G. Hard Open: Leaf opening such that counterweight bumper blocks come in contact with pier bumper blocks.

H. Indicating Function: Contact connection where a closed contact indicates operation and an open contact indicates no operation (i.e., indicating lights).

I. Interlocks or Safety Interlocks: Ensure events occur in sequence and no out-of-sequence events can occur.

J. Leaf Tail: FDOT term for what ***LRFD-MHBD*** calls leaf heel.

K. Leaf Tip: FDOT term for what ***LRFD-MHBD*** calls leaf toe.

L. Mid-Cycle Stop: Leaf(s) stop following normal ramping after depressing the STOP push-button when in the middle of an opening or closing cycle.

M. Near Closed: A point 8 to 10 degrees (approximately, final position to be field determined) before FULL CLOSED, drive to creep speed.

N. Near Open: A point 8 to 10 degrees (approximately, final position to be field determined) before FULL OPEN, drive to creep speed.

O. Ramp: Rate of acceleration or deceleration of leaf drive.

8.1.8 Movable Bridge Terminology

See Figure 8.1.8-1: for standard bridge terminology.

Figure 8.1.8-1: Movable Bridge Terminology

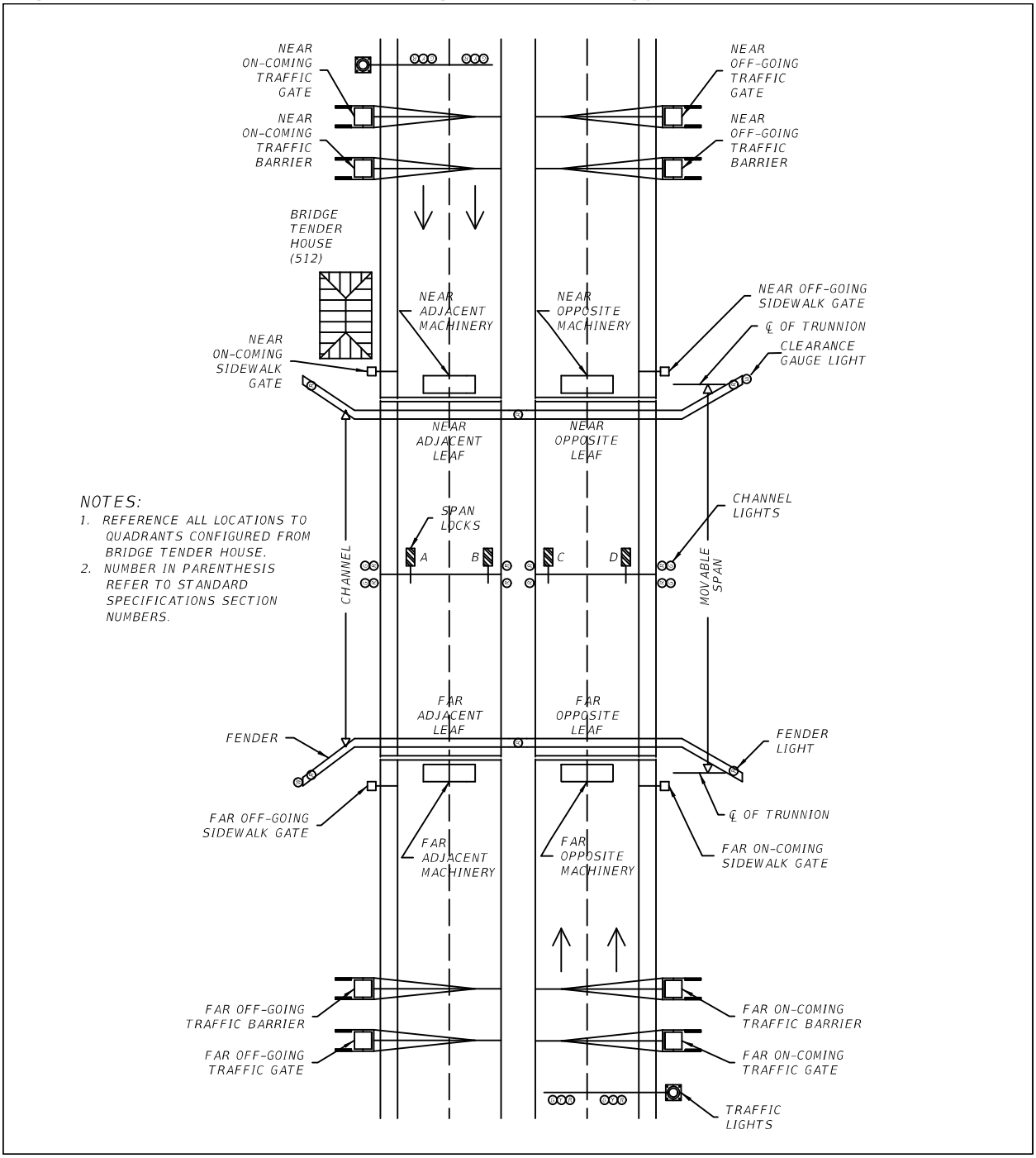

8.2 CONSTRUCTION SPECIFICATIONS AND DESIGN CALCULATIONS

A. Use the "Technical Special Provisions" issued by the SDO. Additional or modified specifications may be required.

B. Provide detailed calculations to justify all equipment and systems proposed with the 60% Plans Submittal. Provide catalog cuts or sketches showing centerlines, outlines and dimensions.

C. Submit calculations in an 8½-inch x 11-inch binder.

8.3 DOUBLE LEAF BASCULE BRIDGES

For the design of double leaf bascule bridges, assume the span locks are engaged (driven) to transmit live load to the opposite leaf. In addition, use the Strength II Limit State, with HL93 live load, assuming the span locks are not engaged to transmit live load to the opposite leaf. Use the Redundancy Factors in ***SDG*** 2.10 as appropriate.

For load rating of double leaf bascule bridges, use the system factors given in the FDOT Bridge Load Rating Manual. Ensure the Design Inventory and FL120 Permit load ratings are greater than 1.0 assuming the span locks are engaged (driven) to transmit live load to the opposite leaf. In addition, ensure the Strength I Design Operating load rating is greater than 1.0 assuming the span locks are not engaged to transmit live load to the opposite leaf. Report the load ratings in the plans along with the span lock assumptions.

For both cases, assume the live load to be on the tip side (in front) of the trunnion.

Commentary: Consistency is achieved between Design and Load Rating since the Design Strength II Limit State has the same 1.35 live load factor as the Load Rating Strength I Limit State under Design Operating. Requiring a Strength I Design Operating load rating factor of one with the span locks removed ensures operation a safe structure in a worst case span lock condition.

8.4 SPEED CONTROL FOR LEAF-DRIVING MOTORS [LRFD-MHBD 5.4]

A. Design a drive system that is capable of operating the leaf in no more than 70 seconds (See Figure 8.4-1) under normal conditions.

Figure 8.4-1: Speed Ramp

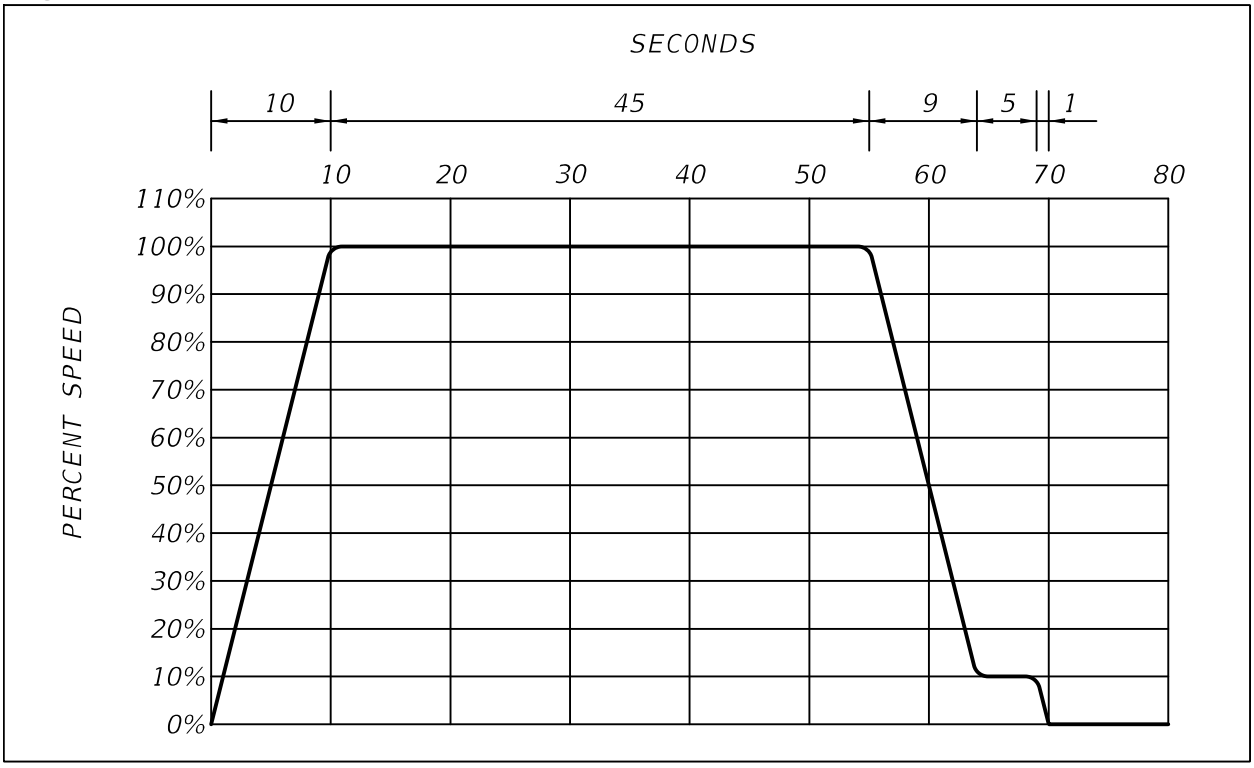

B. Clearly indicate on the plans the following required torques:

1. T_A - the maximum torque required to accelerate the leaf to meet the required time of operation.
2. T_S - the maximum torque required for starting the leaf.
3. T_{CV} - the maximum torque required for constant velocity.

8.4.1 Mechanical Drive Systems [LRFD-MHBD 5.4]

A. Specify a drive capable of developing the torques stated above and operating the leaf (at full speed) in the 70 seconds time limit.

B. Compute the acceleration torque for the inertia and the loading specified for the maximum constant velocity torque [***LRFD-MHBD*** 5.4.2]. In addition the drive must be capable of meeting the maximum starting torque requirements, and the machinery must be capable of holding the leaf against 20 psf wind load in full open leaf position [***LRFD-MHBD*** 5.4.2].

8.4.2 Hydraulic Drive Systems [LRFD-MHBD 7]

A. Use hydraulic drive systems only for rehabilitations. See ***SDG*** 8.6.

B. Design a drive capable of developing the acceleration torque required for the inertia and the loading specified for the maximum constant velocity torque [***LRFD-MHBD*** 5.4.2] and operating the leaf at full speed in the 70 seconds time limit stated above.

C. Longer operating times are allowed for operation under abnormal conditions. Do not exceed 130 seconds under any condition.

8.5 MACHINERY SYSTEMS

8.5.1 Trunnions and Trunnion Bearings [LRFD-MHBD 6.8.1.3]

A. Trunnions:

1. Provide shoulders with fillets of appropriate radius. Provide clearances for thermal expansion between shoulders and bearings.
2. Do not use keys between the trunnion and the hub.
3. For trunnions over 8-inch diameter, provide a hole 1/5 the trunnion diameter lengthwise through the center of the trunnion. Extend the trunnion at least 5/8-inch beyond the end of the trunnion bearings. Provide a 2-inch long counter bore concentric with the trunnion journals at each of the hollow trunnion ends.
4. In addition to the shrink fit, drill and fit dowels of appropriate size through the hub into the trunnion after the trunnion is in place.
5. For rehabilitation of existing Hopkins trunnions, verify that trunnion eccentrics have capability for adjustment to accommodate required changes in trunnion alignment and are a three-piece assembly. If not, provide repair recommendations.

B. Hubs and Rings:

1. Provide Hubs and Rings with a mechanical shrink fit.
2. See Figure 8.5.1-1, for minimum requirements.

Figure 8.5.1-1: Trunnion Hubs

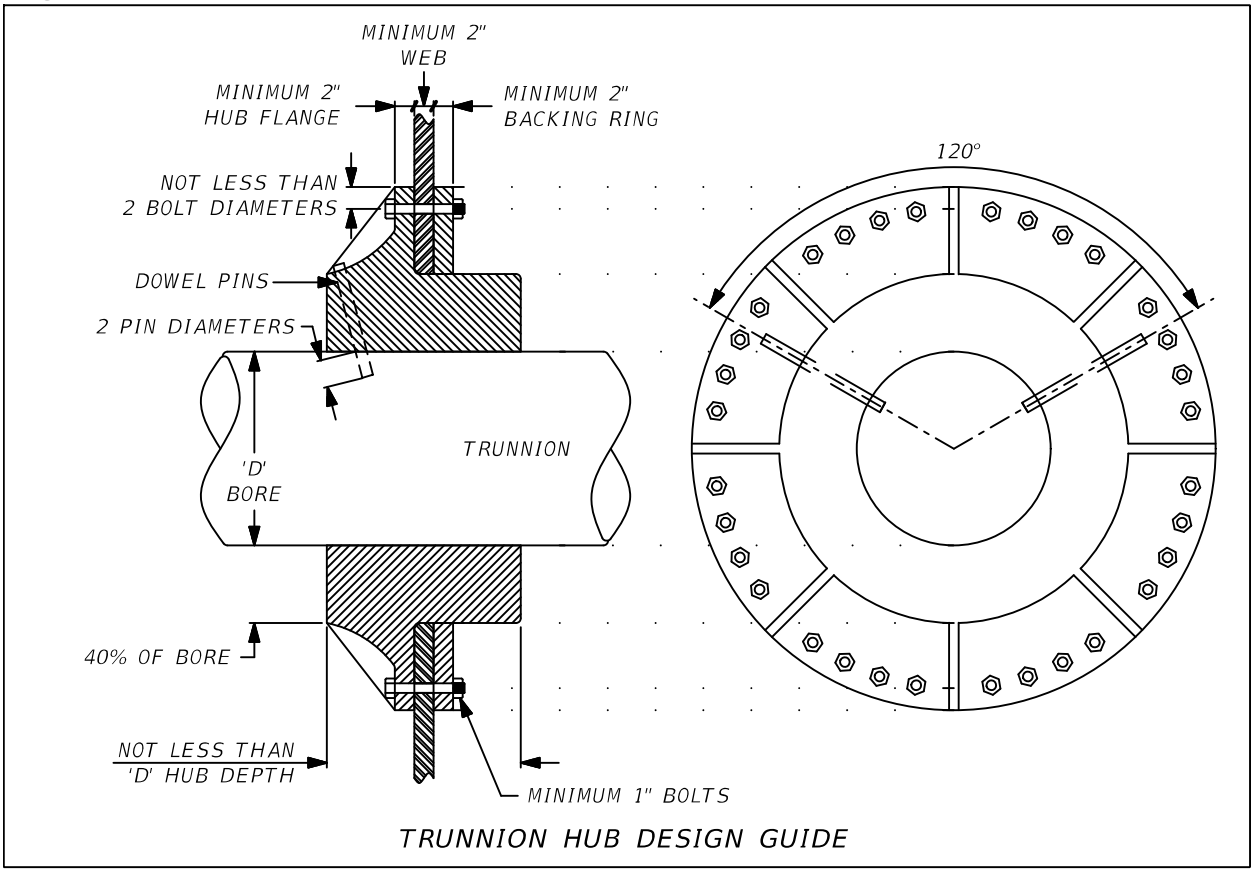

C. Trunnion Bearings:

1. When anti-friction trunnion bearings are used, verify that the trunnion surface finish conforms to the bearing manufacturer's recommendations. Calculate deflections of the trunnion under load and compare with the manufacturer specified clearances to ensure that the journals do not bottom out and bind, particularly on rehabilitation and Hopkins frame bridges. Adjust clearances if necessary.
2. Provide a self-contained or free-standing welded steel support for each trunnion bearing. Design the pedestal such that the height will not exceed 2/3 of the larger dimension of the bearing footprint. Provide non-shrink epoxy grout at the support base and stainless steel shims at the bearing base for leveling and alignment. Design the foot print of the support at least 40% larger than the bearing footprint. Provide a minimum of 1.5 inches of grout thickness.
3. Design bearing mounting bolts and anchor bolts to be accessible.
4. Use full-size shims to cover entire footprint of bearing base.
5. Call out flatness and parallelism tolerances for bearing support machining, and also position, orientation, and levelness tolerances for the support and bearing installation.
6. Machine surfaces per [***LRFD-MHBD*** 6.7.8].

8.5.2 Racks and Girders [LRFD-MHBD 6.8.1.2]

Detail a mechanical, bolted connection between the rack/rack frame and girder. Specify a machined finish for the connecting surfaces. Specify parallelism, perpendicularity, and dimension tolerances for rack.

8.5.3 Leaf Balance [LRFD-MHBD 1.5]

A. New Construction:

1. Design new bascule bridges such that the center of gravity can be adjusted vertically and horizontally.
2. Design mechanical drive system bridges to meet following requirements:
   a. The center of gravity is forward (leaf heavy) of the trunnion and is located at an angle (α) 20 degrees to 50 degrees above a horizontal line passing through the center of trunnion with the leaf in the down position.
   b. The leaf shall be tail (counterweight) heavy in the fully open position.
3. Design both single and double leaf bascule for a leaf heavy out of balance condition which will produce an equivalent force of 2 kips minimum at the tip of the leaf when the leaf is down. Design the live load shoe to resist this equivalent leaf reaction in addition to other design loads.
4. Ensure that the maximum unbalance force is 4 kips at the tip of the leaf when the leaf is in down position.
5. Tight specifications on concrete density and pour thicknesses are required for controlling the weight balance in case of solid decks.
6. Lead counterweight blocks are prohibited.

B. Rehabilitation Projects:

It is recognized that optimal balance might not be possible when rehabilitating an existing leaf. When leaf balance must be adjusted follow the following procedures:

1. If gears are used, apply provisions 2, 3,and 4 above.
2. If hydraulics are used, the balance shall be such that the center of gravity is forward (leaf heavy) of the trunnion throughout the operating (opening) angle.

Include detailed leaf balance adjustment plans, including the location and weight of any ballast to be furnished and installed to achieve an acceptable balance condition. Inform the SDO if these conditions cannot be met.

C. Design Unbalance: For new and rehabilitated bridges, state the design unbalance in the plans using "**W**", "**L**" and "α".

Where: α = angle of inclination of the center of gravity above a horizontal line through the trunnion when the leaf is closed. **W** = total weight of the leaf. **L** = distance from the trunnion axis to the leaf center of gravity. Show center of gravity of leaf and counterweight.

8.5.4 Main Drive Gearboxes [LRFD-MHBD 6.7.6]

A. Specify and detail gearboxes to meet the requirements of the latest edition of ***ANSI/ AGMA 6013 Standard for Industrial Enclosed Gear Drives***. Specify and detail gearing to conform to ***ANSI/AGMA 2015-1-A01***, Accuracy Grade A8 or better using a Service Factor of 1.0 or higher, and indicating input and output torque requirements.

B. Allowable contact stress numbers, "Sac," must conform to the current AGMA 2001 Standard for through hardened and for case-hardened gears.

C. Allowable bending stress numbers, "Sat," must conform to the current AGMA 2001 Standard for through-hardened and for case-hardened gears.

Commentary: These allowable contact and bending stress numbers are for AGMA Grade 1 materials. Grade 2 allowables are permitted only with an approved verification procedure and a sample inspection as required per the SDO.

D. All gearboxes on a bridge shall be models from one manufacturer. Include gear ratios, dimensions, construction details, and AGMA ratings on the Drawings.

E. Provide a gearbox capable of withstanding an overload torque of 300% of full-load motor torque. This torque must be greater than the maximum holding torque for the leaf under the maximum brake-loading conditions.

F. Specify gears with spur, helical, or herringbone teeth. Bearings must be anti-friction type and must have an L-10 life of 40,000 hours as defined in AASHTO, except where rehabilitation of existing boxes requires sleeve-type bearings. Housings must be welded steel plate or steel castings. The inside of the housings must be sandblast-cleaned prior to assembly, completely flushed, and be protected from rusting. Specify exact ratios.

G. Specify units with means for filling and completely draining the case. Specify drains with shutoff valves to minimize spillage. Furnish each unit with a moisture trap breather of the desiccant type with color indicator to show desiccant moisture state.

H. Specify an inspection cover to permit viewing of all gearing (except the differential gearing, if impractical), and both a dipstick and a sight oil level gauge to show the oil level. Specify sight oil level gauges must be of rugged construction and protected from breakage.

Commentary: If a pressurized lubrication system is specified for the gearbox, a redundant lubrication system must also be specified. The redundant system must operate at all times when the primary system is functioning.

I. Design and detail each gearbox with its associated brakes and motors mounted on a welded support. Do not use vertically stacked units and components. Detail and dimension the supports. Size and locate all mounting bolts and anchor bolts. Use non-shrink epoxy grout at support base.

8.5.5 Open Gearing [LRFD-MHBD 6.7.5]

Limit the use of open gearing. When used, design open gearing per AGMA specifications. Design and specify guards for high-speed gearing. Provide Accuracy Grade A9 or better per ***ANSI/AGMA 2015-1-A01***.

8.5.6 Span Locks [LRFD-MHBD 6.8.1.5.1]

A. General:

1. Design span locks attached to the main bascule girders. Provide maintenance access. Do not use tail locks or side locks on new bridge designs.
2. Specify a 4-inch x 6-inch minimum rectangular lock bars, unless analysis shows need for a larger size. Submit design calculations and the selection criteria for review and approval.
3. Install the bar in the guides and receivers with bronze wear fittings top and bottom, properly guided and shimmed. Provide lubrication at the sliding surfaces. Both the front and rear guides are to have a "U" shaped wear-plate that restrains the bar sideways as well as vertically. The receiver is to have a flat wear-plate to give freedom horizontally to easily insert the lock-bar in the opposite leaf. The total vertical clearance between the bar and the wear-shoes must be 0.010-inch to 0.025-inch. Specify the total horizontal clearance on the guides to be 1/16-inch ±1/32-inch.
4. Provide adequate stiffening behind the web for support of guides and receivers.
5. Mount guides and receivers with 1/2-inch minimum shims for adjusting. Slot wear-plate shims for insertion and removal. Consider the ease of field replacing or adjusting shims in the span lock design.
6. Specify alignment and acceptance criteria for complete lock bar machinery, the bar itself in both horizontal and vertical, and for the bar with the cylinder.
7. Provide lubrication fittings at locations that are convenient for routine maintenance.
8. Mount actuation elements on the lock to activate limit switches to control each end of the stroke. Incorporate a means to adjust the limit switch actuation. Taper the receiver end of the lock-bar to facilitate insertion into the receivers of the opposite leaf.
9. Connection of the lock-bar to the hydraulic cylinder must allow for the continual vibration due to traffic on the leaf. This may be accomplished by providing self-aligning rod-end couplers or cylinders with elongated pinholes on male clevises. Mount limit switches for safety interlocks to sense lock bar position. Mount limit switches for span lock operator controls to sense rod position.
10. The hydraulic power system shall utilize a reversing motor-driven pump or a uni-directional pump with 4-way directional valve, and associated valves, piping and

accessories. Specify relief valves to prevent over pressure should the lock-bar jam. Specify pilot operated check valves in the lines to the cylinder to lock the cylinder piston in place when pressure is removed. Provide a hydraulic hand pump and quick-disconnect fittings on the piping to allow pulling or driving of the lock-bar on loss of power. Specify the time of driving or pulling the bar at 5 to 9 seconds.

11. Design and specify access platforms with access hatches located out of the travel lanes.

B. Lock Design Standards:

1. The empirical formula, Equation 8-1 listed below, can be used to determine double leaf bascule lock loads with acceptable results; however, more exact elastic analysis can be used if the solution thus obtained is not accurate enough.

$$\mathbf{S} = (\mathbf{P}/\mathbf{4})(\mathbf{A}/\mathbf{L})^{\mathbf{2}}(\mathbf{3} - \mathbf{A}/\mathbf{L}) \qquad \text{[Eq. 8-1]}$$

S = Shear in lock in kips for a given load on the span, "**P**."

A = Distance in feet from the support to the given load, "**P**."

L = Distance in feet from the support to the center lock.

See Figure 8.5.6-1: for diagrammatic sketch of "**S**," "**A**," and "**L**."

Position trucks both transversely (multiple lanes) and longitudinally on the leaf such that the load on the lock bar is maximized.

Double the Dynamic Load Allowance (IM) to 66% for lock design.

Figure 8.5.6-1: Lock Design Criteria

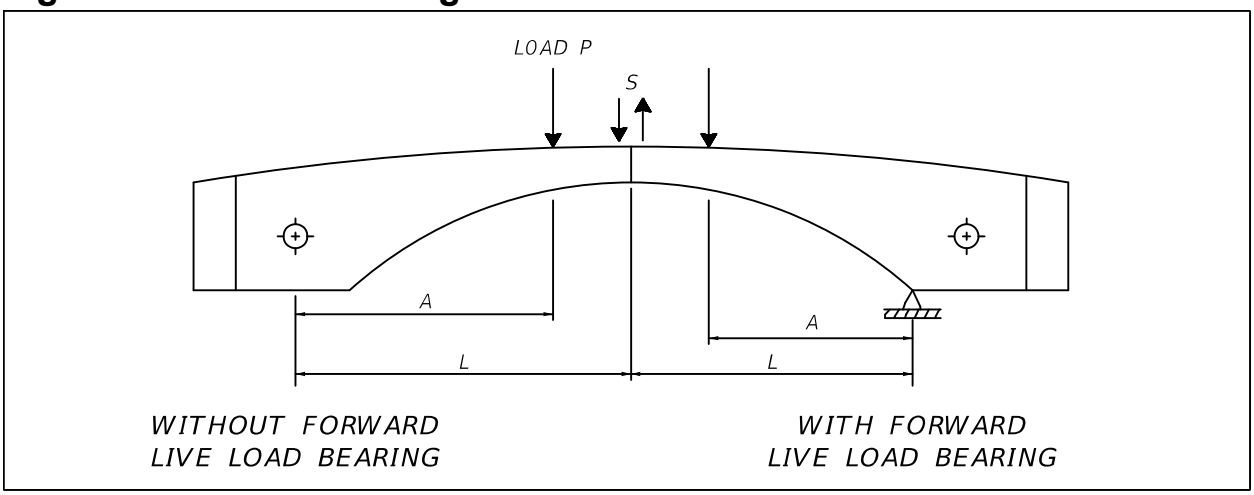

2. Use a Dynamic Load Allowance of 100% for Lock Design on a double-leaf bascule span expected to carry traffic with ADTT (Average Daily Truck Traffic) > 2500.

8.5.7 Brakes [LRFD-MHBD 5.6 and 6.7.13]

A. Use thrustor type brakes. Specify double pole, double throw limit switches to sense brake fully set, brake fully released, and brake manually released.

B. Provide a machinery brake and a motor brake. Submit calculations justifying the brake torque requirements. Specify AISE-NEMA brake torque rating in the plans. Ensure that both dimensions and torque ratings are per AISE Technical Report No. 11, September 1997. Show brake torque requirements on plans.

C. Carefully consider machinery layout when locating brakes. Avoid layouts that require removal of multiple pieces of equipment for maintenance of individual components.

D. Ensure that brakes are installed with base in horizontal position only.

8.5.8 Couplings [LRFD-MHBD 6.7.9.3]

A. Submit calculations and manufacturer's literature for coupling sizes specified.

B. Provide coupling schedule on plans. Include torque ratings, and bore sizes, key sizes and number of keys for the driver and driven sides.

C. Provide coupling guards.

D. Specify low maintenance couplings.

8.5.9 Clutches

Rate clutches for emergency drive engagement for the maximum emergency drive torque. The engaging mechanism must be positive in action and must be designed to remain engaged or disengaged while rotating at normal operating speed. Provisions must be made so that the main operating drive is fully electrically disengaged when the clutch is engaged. Specify double pole, double throw limit switches to sense fully engaged and fully disengaged positions.

8.5.10 Bearings (Sleeve and Anti-Friction) [LRFD-MHBD 6.7.7]

A. Sleeve Bearings must be grease-lubricated bronze bushings 8-inches in diameter and less and must have grease grooves cut in a spiral pattern for the full length of the bearings. Provide cast-steel base and cap for bearings. Cap shall have lifting eyes with loads aligned to the plane of the eye.

B. Anti-Friction Bearing pillow block and flange-mounted roller bearings must be adaptor mounting, self-aligning, expansion and/or non-expansion types.

   1. Specify cast steel housings capable of withstanding the design radial load in any direction, including uplift. Specify that same supplier shall furnish the bearing and housing.

   2. Specify bases cast without mounting holes so that at the time of assembly with the supporting steel work, mounting holes are "drilled-to-fit" in the field.

3. Specify that seals must retain the lubricant and exclude water and debris.
4. Specify high-strength steel cap bolts on pillow blocks. The cap and cap bolts must be capable of resisting the rated bearing load as an uplift force. Where clearance or slotted holes are used, the clearance space must be filled after alignment with a non-shrink grout suitable for steel to ensure satisfactory side load performance.

C. Bearing Supports:

1. Provide a self-contained, welded, steel support for each pair of pinion bearings. Avoid shapes and conditions that trap water, or collect debris.
2. Mount bearings and supports in horizontal position only, along both the axes.
3. Indicate or specify flatness and parallelism, position, levelness, and orientation tolerances for the supports.
4. Machine the mounting surface per [***LRFD-MHBD*** 6.7.8].
5. Design to assure that the anchor bolts will be accessible for hydraulic tensioning.
6. Provide a minimum of 30 inches service clearance all-around.

8.5.11 Anchors [LRFD-MHBD 6.4.1.4]

A. For machinery supports anchored to concrete, design for the maximum forces generated in starting or stopping the leaf plus 100% impact. Design hydraulic cylinder supports for 150% of the relief valve setting or the maximum operating loads plus 100% impact, whichever is greater. Detail machinery supports anchored to the concrete by preloaded anchors such that no tension occurs at the interface of the steel and concrete under any load conditions.

B. Mechanical devices used as anchors must be capable of developing the strength of reinforcement without damage to the concrete. All concrete anchors must be undercut bearing, expansion-type anchors. The anchorage must be developed by expanding an anchor sleeve into a conical undercut so as to eliminate direct lateral stresses found in the setting of conventional anchors. The expansion anchors must meet the ductile failure criteria of American Concrete Institute (ACI) Standard 349, Appendix B. Design an expansion anchoring system that can develop the tensile capacity of the bolt without slip or concrete failure. The bolt must consistently develop the minimum specified strength of the bolting material to provide a favorable plastic stretch over the length of the bolt prior to causing high-energy failure. Require pullout testing of anchors deemed to be critical to the safe operation of the bridge machinery system. Pullout verification tests must be performed at not less than 200% of maximum operational force levels.

C. Design the conical undercut and the nut to transfer the bolt tension load into direct bearing stress between the conical nut and expansion sleeve and the expansion sleeve and conical concrete surface. The depth and diameter of the embedment must be sufficient to assure steel failure, with concrete cone shear strength greater than the strength of the bolting material.

D. Anchor Bolt Design:

1. Design anchor bolts subject to tension at 200% of the allowable basic stress and shown, by tests, to be capable of developing the strength of the bolt material without damage to concrete.
2. The design strength of embedment is based on the following maximum steel stresses:
   a. Tension, $\mathbf{fs_{max} = 0.9fy}$
   b. Compression and Bending, $\mathbf{fs_{max} = 0.9fy}$
   c. Shear, $\mathbf{fs_{max} = 0.55fy}$ (shear-friction provisions of ACI, Section 11.7, must apply)
   d. The permissible design strength for the expansion anchor steel is reduced to 90% of the values for embedment steel.
   e. For bolts and studs, the area of steel required for tension and shear based on the embedment criteria must be considered additive.
   f. Calculate the design pullout strength of concrete, $\mathbf{P_{c'}}$ in pounds, as:

      $$\mathbf{P_{c'}} = \mathbf{3.96}\varphi\sqrt{\mathbf{f'cA}}$$

      Where:

      φ = Capacity reduction factor, **0.65**

      A = Projected effective area of the failure cone, in^2

      f'c = Specified compressive strength of concrete, psi
   g. Steel strength controls when the design pullout strength of the concrete, $\mathbf{P_{c'}}$ exceeds the minimum ultimate tensile strength of the bolt material.
   h. The effective stress area is defined by the projected area of the stress cone radiating toward the concrete surface from the innermost expansion contact surface between the expansion anchor and the drilled hole.
   i. The effective area must be limited by overlapping stress cones, by the intersection of the cones with concrete surfaces, by the bearing area of anchor heads, and by the overall thickness of the concrete. The design pullout strength of concrete must be equal to or greater than the minimum specified tensile strength (or average tensile strength if the minimum is not defined) for the bolting material.

8.5.12 Fasteners [LRFD-MHBD 6.7.15]

A. Ensure all bolts for connecting machinery parts to each other and to supporting members are shown on the plans or specified otherwise and conform to one of the following types:

   1. High-strength bolts.
   2. Turned bolts, turned cap screws, and turned studs.
   3. High-strength turned bolts, turned cap screws, and turned studs.

B. Specify fasteners as per the requirements of ***LRFD-MHBD***.

C. Turned bolts, turned cap screws, and turned studs must have turned shanks and cut threads. Turned bolts must have semi-finished, washer-faced, hexagonal heads and nuts. All finished shanks of turned fasteners must be 0.06-inch larger in diameter than the diameter of the thread, which must determine the head and nut dimensions.

D. Threads for cap screws must conform to the Unified Coarse Thread Series, Class 2A. For bolts and nuts, the bolt must conform to the Coarse Thread Series, Class 2A. The nut must be Unified Coarse, Class 2B. in accordance with the ANSI B1.1 Screw Threads.

E. Furnish positive locks of an approved type for all nuts except those on ASTM A325 Bolts. If double nuts are used, they must be used for all connections requiring occasional opening or adjustment. Provide lock washers made of tempered steel if used for securing.

F. Install high-strength bolts with a hardened plain washer meeting ASTM F436 at each end.

G. Wherever possible, insert high strength bolts connecting machinery parts to structural parts or other machinery parts through the thinner element into the thicker element.

H. Provide cotters that conform to SAE standard dimensions and are made of half-round stainless steel wire, ASTM A276, Type 316.

8.6 HYDRAULIC SYSTEMS FOR REHABILITATIONS [LRFD-MHBD 7]

A. Perform complete analysis and design of hydraulic systems utilized for leaf drive and control, including evaluation of pressure drops throughout the circuit for all loading conditions. Calculate pressure drops for all components of their circuits including valves, filters, hoses, piping, manifolds, flow meters, fittings, etc. Power requirements must be determined based upon pressure drops at the required flows and conservative pump efficiency values.

B. Design the system so that normal operating pressure is limited to 2500 psi. During short periods of time in emergency operations, pressure can increase to 3000 psi, maximum. Correlate hydraulic system strength calculations with the structure loading analysis.

C. Design the power unit and driving units for redundant operation so that the bridge leafs can be operated at a reduced speed with one power unit or one driving unit out of service. Design the power unit to permit its installation and removal in the bridge without removing any major components. Design the power unit to allow the removal of each pump, motor, filter, and main directional valves without prior removal of any other main components. Operation of the redundant components must be possible with the failed component removed from the system.

D. Design all leaf operating hydraulic components within the pier enclosure to prevent any escape of oil to the environment. Specify a drip pan extending beyond the outermost components of the power unit and flange connections to prevent spilling oil leakage on the machinery room floor. Specify sump pumps and other clean up devices suitable for safe collecting and removing of any spilled oil.

E. Design the hydraulic system to limit the normal operating oil temperature to 170° F during the most adverse ambient temperature conditions anticipated.

F. Specify acceptance criteria for hydraulic systems to require a pressure uniformity among multiple cylinders of the same leaf.

8.6.1 Hydraulic Pumps [LRFD-MHBD 7.5.5]

Specify minimum pressure rating of pumps to be 1.5 times the maximum operating pressure. Specify pumps of the Pressure Compensated type. Variation of the pressure setting, including ±50 cst viscosity change must be ±2.5% maximum. Overall minimum efficiency must be 0.86. Boost pumps of any power, and auxiliary or secondary pumps less than 5 hp, need not be pressure compensated.

8.6.2 Cylinders

A. Design the hydraulic cylinder drive systems to prevent sudden closure of valves, and subsequent sudden locking of cylinders, in the event of a power failure or emergency stop. Specify cylinders designed according to the ASME Boiler and Pressure Vessel Code, Section VIII. Specify cylinders with a minimum static failure pressure rating of 10,000 psi (70 Mpa) as defined by NFPA Standards; and designed to operate on biodegradable hydraulic fluid unless otherwise approved by the SDO. Specify ports on each end of the cylinder for pressure instrumentation and bleeding.

B. For all non-drive cylinders, specify stainless steel rods with chrome plated finish 0.005 to 0.012 inches thick per SAE AMS 2406L, Class 2a or others as approved by the SDO.

C. Design and provide rod-end and cap-end cushions.

D. The main lift cylinders must be provided with pilot operating counterbalance or other load protection valves. Specify manual over-ride valve operators to allow leaf to be lowered without power. They must be manifolded directly to ports of cylinder barrel and hold load in position if supply hoses leak or fail.

8.6.3 Control Components [LRFD-MHBD 7.5.6]

A. Flow Control Valves: Use of non-compensated flow control valves must be limited to applications where feed rates are not critical and where load induced pressure is relatively constant. Where load induced pressure is variable, specify pressure compensated flow control valves.

B. Directional Valves: Vertical mounting of solenoid Directional Valves where solenoids are hanging from the valve is to be avoided; horizontal mounting is recommended. Solenoid operated directional control valves provided with a drain connection to reduce response times must always be mounted horizontally.

C. Relief Valves: Specify relief valves to protect all high-pressure lines.

D. Check Valves: Specify poppet type check valves on main circuits or located to hold loads.

8.6.4 Hydraulic Lines [LRFD-MHBD 7.9.1]

A. Piping: Specify stainless steel piping material conforming to ASTM A312 Grade TP316L. For pipe, tubing, and fittings, the minimum ratio of burst pressure rating divided by design pressure in the line must be 4. Provide calculations indicating that the velocity of fluid is at or below 4.3 ft/s in suction lines, 6.5 ft/s in return lines, and 21.5 ft/s in pressure lines.

B. Manifolds: Specify the use of manifolded components.

C. Flexible Hose: Specify flexible hose only in cases where motion or vibration makes the use of rigid piping undesirable. Ensure that the minimum ratio of burst pressure rating divided by design pressure in the line is 4.

D. Seals: Specify all seals, including the ones installed inside hydraulic components, to be fully compatible with the hydraulic fluid being used and adequate for the maximum pressure and temperature operating at that point.

8.6.5 Miscellaneous Hydraulic Components

A. Receivers (Reservoirs): Tanks in open-loop systems must have a capacity greater than the maximum flow of three minutes operation of all pumps connected to the tank plus 10%, and/or the capacity of the total oil volume in the system. Tanks must have an adequate heat dissipation capacity to prevent temperatures above 170° F. Tanks in closed-loop hydrostatic systems must circulate, filter, and cool enough oil to maintain a maximum oil temperature of 170° F. Specify suction port strainers with oil shut-off valves. Specify tanks with easy drainage and provided with adequate openings that allow easy cleaning of all surfaces from the inside. Specify sumps with magnetic traps to capture metal particles. Specify Stainless Steel ASTM A316L tank material. Specify the use of air bladders to avoid water contamination from air moisture condensation due to the breathing effect of the tank.

B. Filtration: Design and specify a filtering system so that filters can be easily serviced and filter elements can be changed without disturbing the system. Do not specify valves that can be left accidentally closed. Strainers are allowed in the suction lines between the tank and the main pumps. Filters can be used if the system is designed to assure that there will be enough static head under all operating conditions at the pumps' inlets. Require absolute pressure (vacuum) sensors to stop the pumps if adequate suction head is not available at the pumps' inlets, and specify pressure line filters capable of at least 10-micron filtration between the pump outlet and the rest of the hydraulic system. The system must have filters with relief-check, by-pass valve and visual clogged filter indicators. Specify a remote sensing pressure switch to indicate a clogged filter. The relief-check, bypass-valve lines must also be filtered.

C. Hydraulic Fluids: Ensure that the manufacturers of the major hydraulic components used in the bridge approve the hydraulic fluid specified for use.

8.7 ELECTRICAL [LRFD-MHBD 8]

8.7.1 Electrical Service [LRFD-MHBD 8.3]

A. Wherever possible, design bridge electrical service for 277/480 V, three-phase, "wye."

B. Size feeders to limit voltage drop to not more than 5% from point of service to farthest load.

C. Do not apply a diversity factor when calculating loads.

D. Provide calculations for transformer and motor inrush current, short circuit currents, and voltage drop.

8.7.2 Alternating Current Motors [LRFD-MHBD 8.5]

Size and select motors per ***LRFD-MHBD*** requirements. On hydraulic systems provide 25% spare motor capacity. Specify motors that comply with the following requirements:

A. Design Criteria for Start-Ups: 12 per hour, 2 per ten-minute period.

B. Power Output, Locked Rotor Torque, Breakdown or Pullout Torque: NEMA Design B Characteristics.

C. Testing Procedure: ANSI/IEEE 112, Test Method B. Load test motors to determine freedom from electrical or mechanical defects and compliance with performance data.

D. Motor Frames: NEMA Standard T-frames of steel or cast iron (no aluminum frames allowed) with end brackets of cast iron with steel inserts. Motors 10 Hp and larger must be TEFC.

E. Thermistor System (Motor Sizes 25 Hp and Larger): Three PTC thermistors embedded in motor windings and epoxy encapsulated solid-state control relay for wiring into motor starter.

F. Bearings: Grease-lubricated, anti-friction ball bearings with housings equipped with plugged provision for relubrication, rated for minimum AFBMA 9, L-10 life of 20,000 hours. Calculate bearing load with NEMA minimum V-belt pulley with belt centerline at end of NEMA standard shaft extension. Stamp bearing sizes on nameplate.

G. Nominal Efficiency: Meet or exceed values in ANSI Schedules at full load and rated voltage when tested in accordance with ANSI/IEEE 112.

H. Nominal Power Factor: Meet or exceed values in ANSI Schedules at full load and rated voltage when tested in accordance with ANSI/IEEE 112.

I. Insulation System: NEMA Class F or better.

J. Service Factor: 1.0.

8.7.3 Engine Generators [LRFD-MHBD 8.3.9]

A. Design per the requirements of the latest edition of NFPA 110. Specify only diesel-fueled generators. Specify day tank with a minimum 10-gallon capacity. Do not use the day tank capacity as part of the main tank capacity. Submit calculations justifying recommended fuel tank size.

B. New Bridges:

1. Provide two generators: Main Generator to power leaf drives and House Generator to power "house" loads.

Commentary: Bridges are requiring bigger generators to operate because of the increase in main drive power requirements. It is not cost effective to run these generators continuously to power miscellaneous loads and generator manufacturers do not recommend running diesel generators at low loads for extended periods.

2. Size Main Generator so that one side of the channel (one side of the bridge) can be opened at a time. Main Generator to run during openings only.

3. Size House Generator to power house loads like traffic lights, navigation lights, control house air conditioner, and house lights. House Generator to run continuously during power outage and is to be inhibited from transferring to the 480 volt bus when the Main Generator is running.

4. Provide fuel tank sized to hold enough fuel to run the Main Generator, at 100% load, for 12 hours and the House Generator, at 75% load, for 72 hours (minimum 50 gallons).

C. Rehabilitations:

1. Size generator so that one side of the channel (one side of the bridge) can be opened at a time concurrent with traffic lights, navigation lights, control house air conditioners, and house lights.

2. Provide fuel tank sized to hold enough fuel to run the generator, at 100% load, for 24 hours (minimum 50 gallons)

8.7.4 Automatic Transfer Switch [LRFD-MHBD 8.3.8]

A. Design switch in conformance with the requirements of the latest edition of NFPA 110.

B. Specify Automatic Transfer Switch with engine generator. Specify an Automatic Transfer Switch that is fully rated to protect all types of loads, inductive and resistive, from loss of continuity of power, without de-rating, either open or enclosed.

C. Specify withstand, closing, and interrupting ratings sufficient for voltage of the system and the available short circuit at the point of application on the drawings. Provide short circuit calculations to justify ATS proposed.

8.7.5 Electrical Control [LRFD-MHBD 8.4]

A. Design an integrated control system. Develop a control interface that matches the operating needs and skill levels of the bridge operators and maintenance personnel that will be using the system. Design a system configuration, select control devices, and program the Programmable Logic Controller (PLC) to produce the desired interface that will comply with the Operation Sequence furnished by the SDO.

B. The use of touch-screen controls is not allowed for permanent installations.

C. Ensure that no control component or electrical equipment requires manual reset after a power failure. All systems must return to normal status when power is restored.

D. Design the bridge control system to be powered through an uninterruptible power supply.

E. EMERGENCY-STOP (E-STOP) stops all machinery in the quickest possible time but in no less than 3 seconds main drives only. In an emergency, hit this button to stop machinery and prevent damage or injury. Specify a button that is reset by twisting clockwise (or counterclockwise) to release to normal up position.

F. At a minimum, provide alarms for the following events:

1. All bridge control failures.
2. All generator/Automatic Transfer Switch failures.
3. All traffic signal failures.
4. All navigation light failures.
5. All traffic gate failures.
6. All span-lock failures.
7. All brake failures (if applicable).
8. All leaf limit switch failures.
9. All drive failures; including motor high temperature (motors larger than 25 Hp) and all hydraulic system failures.

10. Near and far-leaf total openings (not an alarm but part of the monitoring function).
11. All uses of bypass functions, type and time (not an alarm but part of the monitoring function).

G. See Chapter 8 Appendices for Movable Bridge Alarms, Sequence, Sequence Flowcharts, Limit Switches, Indicating Lights, and Naming Conventions.

8.7.6 Motor Controls [LRFD-MHBD 8.6]

A. Specify full-size NEMA rated starters. Do not use IEC starters unless space constraints require their use, and then, only by obtaining prior approval from the SDO.

B. Provide seal-in functions at starters only using auxiliary starter contacts, do not use separate relays or PLC outputs.

C. Do not include panelboards and transformers in the Motor Control Center (MCC) unless space constraints require it, and then, only by obtaining prior approval from the SDO.

D. Provide local disconnect switches for all motors per the requirement of the NEC.

1. For main drive motors 75 hp or larger, connected to an AC or DC variable speed controller, a local disconnect is not required provided that the controller is equipped with a disconnecting means, operable without opening the controller door, capable of being locked in the open position.
2. Provide a permanent sign or placard, close to the motor, indicating the location of the controller.

E. Never directly connect a PLC output to a motor starter.

F. See ***SDG*** 8.9.9 Local Switching for more requirements.

8.7.7 Programmable Logic Controllers [LRFD-MHBD 8.4.2.3]

Refer to the Technical Special Provisions issued by the SDO.

8.7.8 Limit and Seating Switches [LRFD-MHBD 8.4.4]

A. Design each movable leaf with FULL-CLOSED, NEAR-CLOSED, NEAR-OPEN, FULL-OPEN, and FULL-SEATED limit switches. Specify NEMA 4, corrosion resistant metallic housings which have a high degree of electrical noise immunity and a wide operating range. Specify that NEAR-OPEN and NEAR-CLOSED limit switches be mounted, initially, approximately eight degrees from FULL-OPEN and FULL-CLOSED, respectively. Final adjustment of NEAR-OPEN and NEAR-CLOSED will depend upon bridge configuration, drive machinery, and bridge operation.

Commentary: The FULL-CLOSED switch controls the drive stop and the FULL-SEATED switch is the safety interlock to allow driving the locks.

B. Do not connect limit switches in series between different drives. Connect each limit switch to a relay coil (use interpose relays to connect to a PLC input.) Provide position transmitter (potentiometer or other type) to drive leaf position indicators on control console. The position transmitter will also provide a signal to the PLC to use as a reference to determine leaf limit switch failure. Connect limit switches in the following configurations:

Traffic Gates: End-Of-Travel configuration.

Span Locks: End-Of-Travel configuration.

Leaf(s): End-Of-Travel configuration.

Safety Interlocks: Indicating configuration.

Commentary: "End-Of-Travel" is a NOHC (Normally Open Held Closed) limit switch that opens to stop motion and "Indicating" is a NO (Normally Open) limit switch that closes to indicate position has been reached.

C. Do not use electronic limit switches. Plunger type switches are optional.

D. Connect End-Of-Travel limit switches directly to the HAND-OFF-AUTO switches on the MCC so that manual operation of equipment from the MCC is possible independent of the condition of the control system.

8.7.9 Safety Interlocking [LRFD-MHBD 8.4.1]

A. Traffic Lights: Traffic gates LOWER is not enabled until traffic lights RED. Provide bypass capability labeled TRAFFIC LIGHT BYPASS to allow traffic gates LOWER without traffic lights RED.

B. Traffic Gates:

1. Bridge Opening: Span locks PULL is not enabled until all traffic gates (on that span) are fully down (or TRAFFIC GATE BYPASS has been engaged).
2. Bridge Closing: Traffic lights GREEN is not enabled until all traffic gates (on that span) are fully raised (or TRAFFIC GATE BYPASS has been engaged).
3. Provide bypass capability labeled TRAFFIC GATE BYPASS to allow span lock PULL without all traffic gates LOWERED or traffic lights GREEN without all traffic gates RAISED.

C. Span Locks:

1. Bridge Opening: Leaf RAISE is not enabled until all span locks are fully pulled (or SPAN LOCK BYPASS has been engaged).
2. Bridge Closing: Traffic gate RAISE is not enabled until all span locks are fully driven (or SPAN LOCK BYPASS has been engaged).
3. Provide bypass capability and label SPAN LOCK BYPASS to allow leaf RAISE without all span locks pulled or traffic gate RAISE without all span locks DRIVEN.

D. Leaf:

1. Span locks DRIVE is not enabled until leaf (s) is (are) FULLY SEATED (as indicated by the FULLY SEATED switch).
2. Provide bypass capability and label LEAF BYPASS to allow span lock DRIVE without leaf (s) FULLY SEATED.

E. Manually lowering a traffic gate arm will start RED flashing lights on the gate arm and will turn corresponding traffic lights RED independent of the condition of the control system.

8.7.10 Instruments [LRFD-MHBD 8.4.5]

Provide, on the control console, wattmeter for each drive motor or HPU pump motor and provide leaf position indication for each leaf.

8.7.11 Control Console [LRFD-MHBD 8.4.6]

A. Specify a Control Console that contains the necessary switches and indicators to perform semi-automatic and manual operations as required by the standard FDOT Basic Sequence Diagram.

B. All wiring entering or leaving the Control Console must be broken and terminated at terminal blocks.

C. No components other than push buttons, selector switches, indicating lights, terminal blocks, etc., are allowed in the Control Console.

8.7.12 Conductors [LRFD-MHBD 8.9]

A. Single conductor stranded insulated wire. Specify XHHW-2 rated 600 V_{AC}. Specify USE-2, or RHW-2 insulated wire for incoming services. Use 75° C to calculate allowable ampacities.

B. Do not use aluminum conductors of any size. Do not use solid copper conductors.

C. Do not specify wire smaller than No. 12 AWG for power and lighting circuits and smaller than No. 14 AWG for control wiring between cabinets, except that control wiring within a manufactured cabinet may be No. 16 AWG. Minimum field wire size is No. 12 AWG for control conductors between cabinets and field devices and No. 10 AWG for motor loads. No. 14 AWG pigtails, no longer than 12 inches, are allowed for connection of field devices that cannot accommodate a No. 12 AWG wire. Use No. 10 AWG for 20 A, 120 V_{AC}, branch circuit home runs longer than 75 feet, and for 20 A, 277 V_{AC}, branch circuit home runs longer than 200 feet.

D. Do not include power and control conductors in the same conduit.

E. If more than three current carrying conductors are included in a conduit, derate the conductors per Table 310.15(B)(2)(a) of the NEC. For derating purposes, consider all power conductors, other than the ground conductors, as current carrying. This requirement does not apply to control wires.

8.7.13 Electrical Connections between Fixed and Moving Parts [LRFD-MHBD 8.9.5]

Specify extra flexible wire or cable.

8.7.14 Electrical Connections across the Navigable Channel [LRFD-MHBD 8.9.7]

A. Specify a submarine cable assembly consisting of the following three separate cables:

   1. Power Cable: Jacketed and armored with 24 conductors, comprising 12 #4 AWG copper and 12 #10 AWG copper. Bigger motors might require bigger conductors, specify wire size and number as required for main drive motors but not more than twelve conductors per cable. Specify minimum #10 AWG for gate motors, barrier motors, etc., but not more than twelve per cable.
   2. Signal and Control Cable: Jacketed and armored with fifty #12 AWG copper and five pairs of twisted shielded #14 AWG copper conductors.
   3. Bonding Cable: A single #4/0 AWG copper conductor, or larger as required by NFPA-70 and NFPA-780.

B. Determine the total number of conductors required of each size and the number of runs of each type of cable that is required for the project. Use only multiples of the cables listed above. Allow for at least 25% spare conductors for each size.

C. Specify quick-disconnect type terminals for terminating conductors. Specify terminals that isolate wires from a circuit by a removable bridge or other similar means. Specify NEMA 4X metal enclosures for all terminals.

D. Design all above the water line, vertical runs of cable with supports at every five feet if surface mounted. Specify and detail a protective sleeve (Schedule 120 PVC if exposed or Schedule 80 if encased in concrete) around the cable from a point 5 feet below the mean low tide to a point 5 feet above mean high tide. Specify a watertight seal at both ends of the sleeve.

8.7.15 Conduits [LRFD-MHBD 8.10]

A. Do not specify aluminum, IMC, or EMT conduits. Specify conduit types as follows:

   1. One inch minimum size Schedule 80 PVC for underground installations and in slab above grade (embedded)
   2. One inch minimum diameter size rigid galvanized steel (PVC coated) for outdoor locations, above grade, exposed (leafs) and exposed in dry locations (in pier, control house)
   3. 3/4 inch minimum size Schedule 80 PVC for wet and damp locations (fender)
   4. Schedule 80 HDPE conduit for submarine cable installation only, UL listed for 600V electrical applications

5. 3/4 inch minimum diameter (nominal size) liquid-tight flexible metal conduit for the connection of motors, limit switches, and other devices that must be periodically adjusted in position. Limit liquid-tight flexible metal conduit to 2 feet in length and specify a bonding jumper.
6. Limit liquid-tight flexible metal conduit to 2 feet in length and specify a bonding jumper.

B. Specify conduit supports at no more than 5 foot spacing.

C. Show no more than the equivalent of three 90-degree bends between boxes.

8.7.16 Service Lights [LRFD-MHBD 8.11]

Provide minimum of 20 foot-candles in all areas of the machinery platform.
(See ***SDG*** 8.9.11)

8.7.17 Navigation Lights [LRFD-MHBD 1.4.4.6.2] (Rev. 01/12)

A. Design a complete navigation light and aids system in accordance with all local and federal requirements. Comply with the latest edition of the Code of Federal Regulations (CFR) Title 33, Chapter 1, Part 118, and Coast Guard Requirements. (See ***SDG*** 8.9.14)

B. Specify the use of LED fixtures and lamps.

8.7.18 Grounding and Lightning Protection [LRFD-MHBD and 8.13]

A. Provide the following systems:

1. Lightning Protection System: Design per the requirements of ***NFPA 780 Lightning Protection Code***. Protect the bridge with Class II materials.
2. Surge Suppression System: Design Transient Voltage Surge Suppressor (TVSS) system to protect all power, control, signaling, and communication circuits and all submarine conductors that enter or leave the control house. It is imperative to maintain proper segregation of protected and non-protected wiring within the Bridge Control House.
3. Grounding and Bonding System: All equipment installed on the bridge/project must be bonded together by means of a copper bonding conductor which runs the entire length of the project (Traffic Light to Traffic Light). All metal bridge components (i.e., handrail, roadway light poles, traffic gate housings, leafs, etc.) will be connected to the copper-bonding conductor. The copper-bonding conductor must remain continuous across the channel by means of the submarine bonding cable.

B. Require earth grounds at regular intervals with no less than two driven grounds at each pier and one driven ground at each overhead traffic light structure and traffic gate.

C. All main connections to the copper-bonding conductor must be cadwelded.

D. In areas where the copper-bonding conductor is accessible to non-authorized personnel, it must be enclosed in Schedule 80 PVC conduit with stainless steel supports every 5 feet.

8.7.19 Movable Bridge Traffic Signals and Safety Gates [LRFD-MHBD 1.4.4]

Refer to ***Design Standard*** 17890 for Traffic Control Devices for Movable Span Bridge Signals.

8.7.20 Communications Systems

Design and specify a Public Address System, an Intercom System, and a Marine Radio System for each movable bridge. The three systems must work independent of each other and meet the following criteria:

A. Public Address System: One-way handset communication from the operators console to multiple zones (marine channel, roadway, machinery platforms, and other rooms). Specify an all call feature so that the operator may call all zones at once. Specify and detail loudspeakers mounted on the pier wall facing in both directions of the channel, one loudspeaker mounted at each overhead traffic signal, facing the oncoming gate, and loudspeakers at opposite ends of the machinery platform.

B. Intercom System: Two-way communication system that will work similar to an office telephone system with station-to-station calling from any station on the system and all call to all stations on the system from the main intercom panel. Each station must have a hands free capability. A call initiated from one station to another must open a channel and give a tone at the receiving end. The receiving party must have the capability of answering the call by speaking into the open speaker channel, or by picking up the local receiver and speaking into it. All intercom equipment must be capable of operation in a high noise, salt air environment. A handset must be mounted adjacent to the control console, in each room on the bridge and on each machinery platform.

C. Marine Radio System: Hand held, portable, operable on or off the charger, tuned to the proper channels, and a 120-volt charger located adjacent to the operator's console.

8.7.21 Functional Checkout

A. Develop and specify an outline for performing system checkout of all mechanical/ electrical components to ensure contract compliance and proper operation. Specify in-depth testing to be performed by the Contractor.

B. Functional testing for the electrical control system consists of two parts. Perform the first part before delivery and the second part after installation on the bridge. Both tests must be comprehensive. Perform the off-site functional testing to verify that all equipment is functioning as intended.

C. All repairs or adjustments must be made before installation on Department property. All major electrical controls must be assembled and tested in one place, at one time. The test must include as a minimum: control console, PLC, relay back-up system, Motor Control Center, motors, drives, dynamometer load tests, and all other equipment required, in the opinion of the Electrical Engineer of Record, to complete the testing to the satisfaction of the SDO.

D. If not satisfactory, repeat the testing at no cost to the Department. All equipment must be assembled and inter-connected (as they would be on the bridge) to simulate bridge operation. No inputs or outputs must be forced. Indication lights must be provided to show operation and hand operated toggle switches may be used to simulate field limit switches.

E. After the off-site testing is completed to the satisfaction of the SDO, the equipment may be delivered and installed. The entire bridge control system must be re-tested before the bridge is put into service. The field functional testing must include, but is not necessarily limited to, the off-site testing procedure.

F. Test all brakes, prior to the first operation of a bridge leaf with the motors, for correct torque settings. Test all brake controls and interlocks with motor controls for correct operation. Do not operate the leaf, even for "testing" purposes, with brakes manually released or with interlocks bypassed.

8.7.22 Functional Checkout Tests

As a minimum, perform the following tests of Control Functions for both manual and semi-automatic operations:

Commentary: The Electrical Engineer of Record is encouraged to include tests for other equipment not included in the minimum tests listed below.

A. Demonstrate the correct operation of the bridge sequence as described in the Technical Special Provisions and in the drawings.

B. Demonstrate EMERGENCY STOP of each span (leaf) at, or during, each phase of opening and closing the bridge (phases include ramping up or down, full-speed, and creep-speed).

C. Demonstrate EMERGENCY STOP does prevent energization of all rotating machinery in any mode of operation.

D. Demonstrate that the leafs do not come to a sudden stop on a power failure.

E. Interlocks:

1. Simulate the operations of each limit switch to demonstrate correct operation and interlocking of systems.
2. Demonstrate BYPASS operation for each failure for each required bypass.
3. Simulate each failure for which there is an alarm message to demonstrate correct message displays.

4. Testing of interlocks must be sufficient to demonstrate that unsafe or out of sequence operations are prevented.
5. Observe Position Indicator readings with bridge closed and full open to assure correct readings.

F. Navigation Lights:

1. Demonstrate that all fixtures are working.
2. Demonstrate proper change of channel lights from red to green.
3. Demonstrate Battery Backup by simulating a power outage.

G. Traffic Gates:

1. Demonstrate proper operation of each gate arm.
2. Demonstrate opening or closing times. Time shall not exceed 15 seconds in either direction.
3. Demonstrate that gate arms are perpendicular to the roadway when RAISED and parallel to the roadway when LOWERED.
4. Demonstrate that Traffic Lights turn RED when a gate arm is manually lowered.

H. Span Locks:

1. Operate each span lock through one complete cycle and record, with chart recorder, motor power (watts) throughout the operation, record lockbar to guide and lockbar to receiver, clearances.
2. Demonstrate pulling and driving times. Time shall not exceed 10 seconds in either direction.
3. Operate each lock with hand crank or manual pump for one complete cycle.

I. Emergency Power:

1. The complete installation must be initially started and checked-out for operational compliance by a factory-trained representative of the manufacturer of the generator set and the Automatic Transfer Switch. The supplier of the generator set must provide the engine lubrication oil and antifreeze recommended by the manufacturer for operation under the environmental conditions specified.
2. Upon completion of initial start-up and system checkout, the supplier of the generator set must notify the Engineer in advance and perform a field test to demonstrate load-carrying capability, stability, voltage, and frequency.
3. Specify a dielectric absorption test on generator winding with respect to ground. A polarization index must be determined and recorded. Submit copies of test results to the Engineer.
4. Phase rotation test must be made to determine compatibility with load requirements.

5. Engine shutdown features such as low oil pressure, over-temperature, over-speed, over-crank, and any other feature as applicable must be function-tested.
6. In the presence of the Engineer, perform resistive load bank tests at one hundred percent (100%) nameplate rating. Loading must be 25%-rated for 30 minutes, 50%-rated for 30 minutes, 75%-rated for 30 minutes, and 100%-rated for 2 hours. Maintain records throughout this period and record water temperature, oil pressure, ambient air temperature, voltage, current, frequency, kilowatts, and power factor. The above data must be recorded at 15-minute intervals throughout the test.

J. Automatic Transfer Switch: Perform automatic transfer by simulating loss of normal power and return to normal power. Monitor and verify correct operation and timing of: normal voltage sensing relays, engine start sequence, time delay upon transfer, alternate voltage sensing relays, automatic transfer operation, interlocks and limit switch function, timing delay and retransfer upon normal power restoration, and engine shut-down feature.

K. Programmable Logic Controller (PLC) Program:

1. Demonstrate the completed program's capability prior to installation or connection of the system to the bridge. Arrange and schedule the demonstration with the Engineer and the Electrical Engineer of Record.
2. A detailed field test procedure must be written and provided to the Electrical Engineer of Record for approval. Provide for testing as listed below:
   a. Exercise all remote limit switches to simulate faults including locks, gates, traffic lights, etc. Readouts must appear on the alphanumeric display.
   b. When the local testing of all individual remote components is completed, check all individual manual override selections for proper operation at the console. When all override selections have been satisfactorily checked-out, switch the system into semi-automatic (PLC) mode and exercise for a full raise and lower cycle. Verify that operation is as diagrammed on the plan sheet for the sequence of events.
   c. Initiate a PLC sequence of operation interweaving the by-pass functions with the semi-automatic functions for all remote equipment.
   d. Remove the power from the input utility lines. The Automatic Transfer Switch (ATS) shall activate the engine-generator to supply power. Raise and lower the bridge again. The bascule leafs shall operate in sequence; i.e., two adjacent bascule leafs at a time. Upon completion of the test, re-apply utility power to ATS. The load shall switch over to utility for normal operation.
   e. Certify that all safety features are included in the program, and that the program will not accept commands that are contrary to the basic sequence diagram. Submit failure mode testing as part of the written field test procedure.

8.8 CONTROL HOUSE

A. A control house is the facility designed as part of a movable bridge that is occupied by the bridge operator. This facility houses the business functions, spaces, and mechanical & electrical systems required to operate the bridge. This includes equipment such as pumps, motors, generators, etc. and systems such as controls, lighting, plumbing, and HVAC.

B. The design of new control houses and renovation of existing control houses must comply with the requirements of the FLORIDA BUILDING CODE (FBC) and the LIFE SAFETY CODE (LSC).

C. Operation areas contain business functions. Equipment areas contain mechanical and electrical equipment.

8.8.1 General

A. These guidelines are intended primarily for use in the design of new control houses but many items apply to renovations of existing houses.

B. The operator must be able to see and hear all traffic (vehicular, pedestrian and marine) from the primary work station in the operation area.

C. Heat gain can be a problem. Where sight considerations permit, insulated walls shall be used as a buffer against heat gain. Provide 4 to 5 foot roof overhangs.

D. The preferred wall construction is reinforced concrete; minimum six inches thick with architectural treatments such as fluted corner pilasters, arches, frieze ornamentation, horizontal banding or other relief to blend with local design considerations.

E. Finish exterior of house with stucco, Class V coating or spray-on granite or cast stone.

F. Design the Bridge Control House with a minimum of 250 square feet of usable floor space. This allows enough room for a toilet, kitchenette, and coat/mop closet as well as wall-hung desk and control console. Add additional interior square footage for stairwells, or place stairs on exterior of structure.

G. Windowsills shall be no more than 34 inches from the floor. This allows for operator vision when seated in a standard task chair. Ensure that window mullions will not be so deep as to create a blind spot when trying to observe the sidewalks or traffic gates.

H. Give consideration to lines of sight from control station when determining sizing, location and spacing of columns. Column size and layout shall not limit lines of sight between control house and all traffic (vehicular, pedestrian and marine). The operator must be able to view all the above traffic from the control station.

I. For operator standing at control console, verify sight lines to:

   1. Traffic gates for both directions of vehicular traffic.

   2. Marine traffic for both directions of the navigable channel.

3. Pedestrian traffic (sidewalks), pedestrian gates and other locations where pedestrians normally will stop.
4. Under side of bridge, at channel.

J. If windows must be placed in the restroom, the bottom of window shall be a minimum of 60" above finished floor.

K. Specify the control house exterior wall framing and surfaces to be bullet resistant; capable of meeting the standards of UL 752, Level 2, (357 magnum).

8.8.2 Site Water Lines

A. Specify pipe and fittings for site water lines including domestic water line, valves, fire hydrants and domestic water hydrants. Size to provide adequate pressure and detail drawings as necessary to show location and extent of work.

B. Specify disinfection of potable water distribution system and all water lines per the requirements of American Water Works Association (AWWA).

8.8.3 Site Sanitary Sewage System

A. Gravity lines to manholes are preferred. Avoid the use of lift stations. If lift stations are required, special consideration must be given to daily flows as well as pump cycle times. Low daily flows result in long cycle times and associated odor problems. Include pump and flow calculations and assumptions in 60% submittal.

B. For bridges which are not served by a local utility company, or where connection is prohibitively expensive, and where septic tanks are not permitted or practical, coast guard approved marine sanitation devices are acceptable.

8.8.4 Stairs, Steps and Ladders

A. Stair treads must be at least 3 feet wide and comply with NFPA 101 - Life Safety Code and Florida Building Code in regard to riser and tread dimensions. Comply with OSHA requirements. The preferred tread is skid-resistant open grating. Avoid the use of ladders or stair ladders.

B. Stairs and landings may be on the exterior of the house.

Commentary: This reduces heating and cooling requirements as well as providing more usable floor space.

C. For interior stairwells, spiral stairs (Minimum 6 foot diameter) are acceptable although not preferred. Special attention must be paid to clearances for moving equipment into or out of a control house. Design stair assembly to support live load of 100-lbs/sq ft with deflection of stringer not to exceed 1/180 of span. Include calculations in the 60% submittal.

D. In situations where stairs cannot be accommodated, ship ladders may be used as a last option in applications limited to a vertical height of 48-inches.

8.8.5 Handrails, Guards, Railing and Grating

A. Handrails, guards and railing shall be steel or aluminum pipe with corrosion-resistant coatings or treatment.

B. Exterior railing must meet the requirements of the applicable ***Design Standards*** Index 850 Series or 860 Series and the appropriate ***Instructions for Design Standards (IDS)***.

C. Interior railing must meet the requirements of the Florida Building Code (FBC) and Life Safety Code (LSC) for size, height and strength.

D. Handrails attached to guards or railing must meet the requirements of the FBC and LSC for size, strength and continuity. Continuous, smooth pipe is required for handrails.

E. Welded pipe rails are not preferred for guards and railing.

F. Include structural calculations in 60% submittal.

G. Grating and Floor Plates. Specify skid resistant open grating, except at control level.

8.8.6 Framing and Sheathing

Include a specification section for the following items if used:

A. Structural floor, wall, and roof framing.

B. Built-up structural beams and columns.

C. Diaphragm trusses fabricated on site.

D. Prefabricated, engineered trusses.

E. Wall and roof sheathing.

F. Sill gaskets and flashing.

G. Preservative treatment of wood.

H. Fire retardant treatment of wood.

I. Telephone and electrical panel back boards.

J. Concealed wood blocking for support of toilet and bath accessories, wall cabinets, and wood trim.

K. All other sections applicable to control house design and construction.

8.8.7 Desktop and Cabinet

A. Specify and detail a wall-hung desktop with drawer mounted 29.5-inches above finished floor. Show desktop.

B. Specify and detail a minimum 7 feet of 36-inch base cabinets and 7 feet of 24-inch or 36-inch wall cabinets.

C. Specify cabinet hardware and solid-surfacing material counter-tops and desktop.

8.8.8 Insulation

A. Design the control house so that insulation meets the following requirements: Walls - R19, Roof assembly - R30.

B. Rigid insulation may be used at underside of floor slabs, exterior walls, and between floors separating conditioned and unconditioned spaces.

C. Batt Insulation may be used in ceiling construction and for filling perimeter and door shim spaces, crevices in exterior wall and roof.

8.8.9 Fire-Stopping

Specify, design, and detail fire-stopping for wall and floor penetrations.

A. Main Floor Walls: 1 Hour.

B. Stair Walls (Interior): 2 Hours.

C. Interior Partitions: 3/4 Hour.

8.8.10 Roof

A. Do not use flat roofs, "built-up" roofs, etc.

B. Design: Hip roof with minimum 4:12 pitch and 4 to 5 foot overhang.

C. Roof Material: Specify and detail either standing seam 18 gauge metal or glazed clay tiles. Note: many of the coastal environments will void the manufacturer's warranty for metal. Before specifying a metal roof determine if the manufacturer will warrant the roof in the proposed environment, if not, use tiles meeting or exceeding the Grade I requirements of ASTM C 1167.

D. Soffit: Specify ventilated aluminum.

E. Fascia: Specify aluminum, vinyl or stucco.

F. Design for uplift forces per Florida Building Code and applicable wind speeds on roof, roof framing, decking, fascia, Soffit, anchors and other components. Include roof load and uplift calculations in 60% submittal.

G. During design, consider underlayment, eave, and ridge protection, nailers and associated metal flashing.

H. Provide for concealed lightning protection down conductors.

8.8.11 Doors and Hardware

A. Specify and detail armored aluminum entry doors. All exterior doors, frames and glazing ballistics meeting the standards of UL 752, Level 2, (357 magnum).

B. Interior Doors:

1. Passage - Solid core or solid wood.
2. Closets - Louvered.

C. Hardware:

1. Specify corrosion resistant, heavy-duty, commercial ball-bearing hinges and levered locksets and dead bolts for entry doors.
2. Specify adjustable thresholds, weather-stripping, seals and door gaskets.
3. Specify interior locksets.
4. Call for all locks keyed alike and spare keys.
5. Require the use of panic bar hardware for the electrical room door and have doors swing out.

D. The use of a card reader is not allowed.

8.8.12 Windows

A. Specify windows complying with the American Architectural Manufacturers Association standards (AAMA) for heavy commercial windows.

B. Specify double-hung, marine glazed heavy commercial (DHHC) type extruded aluminum windows.

C. At a minimum, specify all exterior windows as meeting the requirements of the Florida Building Code's Wind-Born Debris Region and wind speed requirements (see figure 1609 of the Florida Building Code). Ensure all glazing meets the requirements of the Large Missile Test.

Commentary: District Maintenance Engineer can require the use of frames and glazing meeting the ballistic standards of UL 752, Level 2 (.357 magnum).

D. Specify windows to be counter balanced to provide 60% lift assistance.

E. Specify operating hardware and insect screens.

F. Specify perimeter sealant.

G. Structural Loads: ASTM E330-70. With 60-lb/sq ft exterior uniform load and 60-lb/sq ft interior load applied for 10 seconds with no glass breakage, permanent damage to fasteners, hardware parts, actuating mechanisms or any other damage.

H. Air Leakage: No more than 0.35 cfm/min/sq ft of wall area, measured at a reference differential pressure across assembly of 1.57 psf as measured in accordance with ASTM E283.

I. Water Leakage: None, when measured in accordance with ASTM E331 with a test pressure of 6 psf applied at 5 gallons per hour per square ft.

J. Place windows to allow line-of-sight to all marine, vehicular and pedestrian traffic from both standing and seated positions at the control console.

8.8.13 Veneer Plaster (Interior Walls)

Specify 1/4-inch plaster veneer over 1/2-inch moisture-resistant gypsum wallboard (blueboard), masonry and concrete surfaces.

8.8.14 Gypsum Board (Interior Walls)

A. Specify 1/2-inch blueboard for plaster veneer.

B. Specify 1/2-inch fiberglass reinforced cement backer board for tile.

8.8.15 Floor Tile

A. Specify non-skid quarry tile on operator's level.

B. Do not use vinyl floor tiles or sheet goods.

8.8.16 Epoxy Flooring

A. Specify fluid applied non-slip epoxy flooring for electrical rooms, machinery rooms and machinery platforms.

B. Ensure that the manufacturer of the product warrants the product used and that it is installed per their instructions.

C. Do not specify painted floors.

8.8.17 Painting

Specify paint for woodwork and walls.

8.8.18 Wall Louvers

A. Use rainproof intake and exhaust louvers and size to provide required free area.

B. Design with minimum 40% free area to permit passage of air at a velocity of 335 ft/min [160 L/sec] without blade vibration or noise with maximum static pressure loss of 0.25 inches [6 mm] measured at 375 ft/m in [175 L/sec].

8.8.19 Toilet and Bath Accessories

A. Specify a mirror, soap dispenser, tissue holder, paper towel dispenser, and a waste paper basket for each bathroom.

B. Specify a bathroom exhaust fan.

C. Specify porcelain water closet and lavatory.

8.8.20 Equipment and Appliances

A. Specify a shelf mounted or built-in 1.5 cubic foot microwave with digital keypad and user's manual.

B. Specify an under counter refrigerator with user's manual.

C. Specify a Type 10-ABC fire extinguisher for each room.

8.8.21 Furnishings

A. Specify two, gas lift, front-tilt task chairs.

B. Provide one R5 cork bulletin board.

C. Specify window treatment (blinds or shades).

8.8.22 Pipe and Fittings

A. Specify pipe fittings, valves, and corporation stops, etc.

B. Provide hose bib outside the control house and at each machinery platform.

C. Provide wall-mounted, corrosion resistant (fiberglass or plastic) hose hanger and 50-foot, nylon reinforced, 3/4-inch garden hose in a secure area.

D. Provide stops at all plumbing fixtures.

E. Provide primed floor drains.

F. Provide air traps to eliminate/reduce water hammer.

G. Provide ice maker supply line.

8.8.23 Plumbing Fixtures

A. Specify a single bowl, stainless steel, self-rimming kitchen counter sink, a sink faucet, a lavatory, a lavatory faucet with lever handles, and an accessible height elongated toilet.

B. Do not specify ultra-low flow fixtures unless the bridge has a marine digester system.

C. Specify all trim, stops, drains, tail pieces, etc. for each fixture.

D. Provide instant recovery water heater for kitchen sink and lavatory.

8.8.24 Heating, Ventilating and Air Conditioning

A. A central split unit is preferred but multiple, packaged units may be acceptable for rehabs. Design HVAC system with indoor air handler, duct work and outdoor unit(s).

B. Perform load calculations and design the system accordingly. Include load calculations in 60% or 75% submittal.

C. For highly corrosive environments use corrosive resistant equipment.

D. Specify packaged terminal air conditioning units.

E. Specify packaged terminal heat pump units.

F. Specify and detail wall sleeves and louvers.

G. Specify controls.

H. Specify and show ceiling fans on floor plan.

I. Specify ventilation equipment for machinery levels and attic.

8.8.25 Interior Luminaires

A. Specify energy efficient fixtures.

B. Avoid the use of heat producing fixtures.

C. Pay particular attention when designing the lighting in the control house to reduce the inability to see out of the windows at night when the interior lights are on.

8.8.26 Video Equipment

A. Cameras: Specify cameras as needed to provide a full view of both vehicular and pedestrian traffic in each direction and at channel as needed where view is limited. Pay particular attention to the sidewalk areas directly under balconies which cannot be seen from inside the house.

B. Monitors: Two; one showing all cameras (spilt screen) and the second showing full view of selected camera.

C. Provide 30-day recording capabilities for each camera.

8.8.27 Fire and Security Alarm System

A. Specify smoke detection in each of the machinery areas, and in each room of the control house.

B. Specify audible and visual alarm devices in each of the machinery areas and in each room of the control house.

8.9 MAINTAINABILITY

8.9.1 General

A. These maintainability guidelines apply to new bridges and existing bridges on which construction has not been initiated.

B. Variations from these practices for the rehabilitation of existing bridges may be authorized by the SDO, but only by approval in writing.

8.9.2 Trunnion Bearings

A. Design trunnion bearings so that replacement of bushings can be accomplished with the leaf jacked 1/2-inch [12 mm] and in a horizontal position. Provide suitable jacking holes or puller grooves in bushings to permit extraction. Jacking holes must utilize standard bolts pushing against the housing that supports the bushing.

B. Specify trunnion bushings and housings of a split configuration. The bearing cap and upper-half bushing (if an upper-half bushing is required) must be removable without leaf jacking or removal of other components.

8.9.3 Leaf-Jacking of New Bridges

A. Stationary stabilizing connector points are located on the bascule pier. These points provide a stationary support for stabilizing the leaf, by connection to the leaf stabilizing connector points. Locate one set of leaf-jacking surfaces under the trunnions (normally, this will be on the bottom surface of the bascule girder). Locate a second set on the lower surface at the rear end of the counterweight. Estimate jacking loads at each location and indicate on the drawings. Include jacking related notes as needed.

B. Locate leaf stabilizing connector points on the bascule girder forward and back of the leaf jacking surfaces. The stationary stabilizing connector point (forward) must be in the region of the Live Load Shoe. Locate stationary stabilizing connector points (rear) on the cross girder support at the rear of the bascule pier. Provide connector points to attach stabilizing structural steel components.

Commentary: Position the stationary jacking surface at an elevation as high as practical so that standard hydraulic jacks can be installed.

C. The following definitions of terms used above describe elements of the leaf-jacking system:

   1. Leaf-jacking Surface: An area located under the trunnion on the bottom surface of the bascule girder.

   2. Leaf Stabilizing Connector Point (forward): An area adjacent to the live load shoe point of impact on the bottom surface of the bascule girder.

3. Leaf Stabilizing Connector Point (rear): An area at the rear end of the counterweight on the lower surface of the counterweight girder. (NOTE: For bascule bridges having tail locks, the leaf stabilizing connector point may be located on the bottom surface of the lockbar receiver located in the counterweight.)
4. Stationary Jacking Surface: The surface located on the bascule pier under the leaf jacking surfaces. The stationary jacking surface provides an area against which to jack in lifting the leaf.

8.9.4 Trunnion Alignment Features

A. Provide center holes in trunnions to allow measurement and inspection of trunnion alignment. Leaf structural components must not interfere with complete visibility through the trunnion center holes. Provide individual adjustment for alignment of trunnions.

B. Provide a permanent walkway or ladder with work platform to permit inspection of trunnion alignment.

8.9.5 Lock Systems

A. New bridge designs that require tail locks are not allowed.

B. Span locks are to be accessible from the bridge sidewalk through a suitable hatch or access door. Provide a work platform suitable for servicing of the lockbars and/or shim adjustment under the deck and in the region around the span locks.

C. Design lock systems to allow disabling an individual lock, for maintenance or replacement, without interfering with the operation of any of the other lockbars on the bascule leaf.

D. Design tail locks, when required, so that the lockbar mechanism is accessible for repair without raising the leaf. The lockbar drive mechanism must be accessible from a permanently installed platform within the bridge structure.

E. Provide adjustable lockbar clearances for wear compensation.

8.9.6 Machinery Drive Systems

Design machinery drive assemblies so that components are individually removable from the drive system without removal of other major components of the drive system.

Commentary: For example, a gearbox assembly can be removed by breaking flexible couplings at the power input and output ends of the gearbox.

8.9.7 Lubrication Provisions

A. Bridge system components requiring lubrication must be accessible without use of temporary ladders or platforms. Provide permanent walkways and stairwells to permit free access to regions requiring lubrication. Lubrication fittings must be visible, clearly marked and easily reached by maintenance personnel.

B. Designs for automatic lubrication systems must provide for storage of not less than three months supply of lubricant without refilling. Refill must be accomplished within a period of 15 minutes through a vandal-proof connection box located on the bridge sidewalk, clear of the roadway. Blockage of one traffic lane during this period is permitted.

8.9.8 Drive System Bushings

All bearing housings and bushings in open machinery drive and lock systems must utilize split-bearing housings and bushings and must be individually removable and replaceable without affecting adjacent assemblies.

8.9.9 Local Switching

A. Provide "Hand-Off-Automatic" switching capability for maintenance operations on traffic gate controllers, barrier gate controllers, sidewalk gate controllers, brakes and motors for span and tail-lock systems. Provide pushbuttons and indicating lights on MCC for local "hand" operation.

B. Provide "On-Off" switching capability for maintenance operations on main drive motor(s) and machinery brakes, motor controller panels, and main drive motors.

C. Remote switches must be lockable for security against vandalism.

8.9.10 Service Accessibility

A. Provide a service area not less than 30-inches wide around system drive components.

B. Provide a permanent walkway from bascule pier to fender system to allow access to fender mounted components.

8.9.11 Service Lighting and Receptacles

A. Provide lighting of machinery and electrical rooms as necessary to assure adequate lighting for maintenance of equipment, but with a minimum lighting level of 20 fc [200 Lux].

B. Provide switching so that personnel can obtain adequate lighting without leaving the work area for switching. Provide master switching from the control tower.

C. Provide each work area with receptacles for supplementary lighting and power tools such as drills, soldering and welding equipment.

8.9.12 Communications

Provide permanent communications equipment between the control tower and areas requiring routine maintenance (machinery drive areas, power and control panel locations, traffic gates and waterway).

8.9.13 Diagnostic Reference Guide for Maintenance

Specify diagnostic instrumentation and system fault displays for mechanical and electrical systems. Malfunction information must be presented on a control system monitor located in the bridge control house. Data must be automatically recorded. System descriptive information, such as ladder diagrams and wiring data, must be available on the system memory to enable corrective actions on system malfunctions and to identify areas requiring preventative maintenance.

8.9.14 Navigation Lights

Specify LED array fixtures with a minimum of 50,000 hour life on fenders and center of channel positions to reduce effort required for maintenance of navigation lights.

8.9.15 Working Conditions for Improved Maintainability

When specified by the Department, for either new or rehabilitated bascule bridge design, use enclosed machinery and electrical equipment areas with air-conditioned areas containing electronic equipment to protect the equipment as required by the equipment manufacturer and the SDO.

8.9.16 Weatherproofing

A. New and rehabilitated bascule bridge designs must incorporate details to prevent water drainage and sand deposition into machinery areas. Avoid details that trap dirt and water; provide drain holes, partial enclosures, sloped floors, etc., to minimize trapping of water and soil.

B. Provide a 2 inch concrete pad under all floor mounted electrical equipment.

9 BDR COST ESTIMATING (Rev. 01/12)

9.1 GENERAL

A. The purpose of the Bridge Development Report (BDR) is to select the most cost efficient and appropriate structure type for the site under consideration. This chapter describes a three-step process to estimate bridge costs based on FDOT historical bid data. The first step is to utilize the average unit material costs to develop an estimate based on the completed preliminary design. The second step is to adjust the total bridge cost for the unique site conditions by use of the site adjustment factors. The third and final step is to review the computed total bridge cost on a cost per square foot basis and compare this cost against the historical cost range for similar structure types. This process should produce a reasonably accurate cost estimate. However, if a site has a set of odd circumstances, which will affect the bridge cost, account for these unique site conditions in the estimate. If the estimated cost is outside the cost range in step three, provide documentation supporting the variance in cost.

B. The three-step process described in this chapter is not suitable for cost estimating structure types without repeatable bid history. Estimates for unique structures such as movable, cable stayed, cast-in-place on form travelers, arches and tunnels should based on construction time, labor, materials, and equipment.

C. Click to view or download a BDR bridge cost estimate spreadsheet.

9.2 BDR BRIDGE COST ESTIMATING

The applicability of this three-step process is explained in the general section. The process stated below is developed for estimating the bridge cost after the completion of the preliminary design, which includes member selection, member size and member reinforcing. This process will develop costs for the bridge superstructure and substructure from beginning to end bridge. Costs for all other items including but not limited to the following are excluded from the costs provided in this chapter: mobilization, operation costs for existing bridge(s), removal of existing bridge or bridge fenders, lighting, walls, deck drainage systems, embankment; fenders, approach slabs, maintenance of traffic, load tests, and bank stabilization.

Step One:

Utilizing the costs provided herein, develop the cost estimate for each bridge type under consideration.

9.2.1 Substructure

A. Prestressed Concrete Piling; cost per linear foot (furnished and installed)

Size of Piling	Driven Plumb or 1" Batter	Driven Battered
18-inch	$55/large qty. - $75/small qty.	$75
24-inch	$70/large qty. - $100/small qty.	$95
30-inch	$120	$140

When heavy mild steel reinforcing is used in the pile head, add $250.

When silica fume, metakaolin or ultrafine fly ash is used, add $6 per LF to the piling cost.

For piles using Embedded Data Collectors, add $2000 per pile.

B. Steel Piling: cost per linear foot (furnished and installed)

14 x 73 H Section	$70
14 x 89 H Section	$90
20" Pipe Pile	$105
24" Pipe Pile	$114
30" Pipe Pile	$160

C. Drilled Shaft: total in-place cost per LF

Diameter	3 ft	4 ft	5 ft	6 ft	7 ft	8 ft	9 ft
On land with casing salvaged.	$250	$430	$510	$630	$750		
In water with casing salvaged.	$320	$500	$600	$690	$800	$1100	
In water with permanent casing.	$460	$625	$750	$950	$1100	$1500	$1800

D. Sheet Piling Walls

Prestressed concrete cost per linear foot:	10 x 30	$100	
	12 x 30	$110	
Steel cost per square foot:	Permanent Cantilever	$24	Anchored, $36[1]
	Temporary Cantilever	$14	Anchored, $22[1]
Soil Anchors: cost per anchor:	Permanent	$3200	
	Temporary	$2800	

1 Includes the cost of waler steel, miscellaneous steel for permanent/temp. walls and concrete face for permanent walls.

E. Cofferdam Footing (cofferdam and seal concrete*)

Prorate the cost provided herein based on area and depth of water. A cofferdam footing having the following attributes will cost $600,000.

Area: 63 ft x 37.25 ft. Depth of seal; 5 ft. Depth of water over the footing; 16 ft.

* Cost of seal concrete included in pay item 400-3-20 or 400-4-200.

F. Substructure Concrete: cost per cubic yard.

Concrete:	$450-$700
Mass concrete:	$425-$600
Seal concrete:	$275-$550
Bulkhead Conc.	$600-$1250
Shell fill:	$30

For calcium nitrite, add $40 per cubic yard. (@ 4.5 gal per cubic yard)

For silica fume, metakaolin or ultrafine fly ash, add $40 per cubic yard. (@ 60 lbs. per cubic yard)

G. Reinforcing Steel; cost per pound: $0.90

9.2.2 Superstructure

A. Bearing Material

1. Neoprene Bearing Pads:	$900 per Cubic Foot
2. Multirotational Bearings, (Capacity in Kips)	Cost per Each
1-250	$6,000
251-500	$7,000
501-750	$8,000
751-1000	$9,500
1001-1250	$9,900
1251-1500	$10,000
1501-1750	$11,000
1751-2000	$12,500
>2000	$15,000

B. Bridge Girders

1. Structural Steel; Cost per pound (includes coating costs.)

Rolled wide flange sections; straight	$1.35
Rolled wide flange sections; curved	$1.70
Plate girders; straight	$1.50
Plate girders; curved	$1.70
Box girders; straight	$1.75
Box girders; curved	$1.85

When uncoated weathering steel is used, reduce the price by $0.04 per pound. Inorganic zinc coating systems have an expected life cycle of 20 years.

2. Prestressed Concrete Girders and Slabs; cost per linear foot.

FI Inverted Tee; 16"	$80[1]
FI Inverted Tee; 20"	$90
FI Inverted Tee; 24"	$105[1]
FI Tub (U-Beam); 48"	$700[1]
FI Tub (U-Beam); 54"	$750
FI Tub (U-Beam); 63"	$800
FI Tub (U-Beam); 72"	$900
Solid Flat Slab (<48”x12”)	$150
Solid Flat Slab (<48”x15”)	$160
Solid Flat Slab (48"x12")	$160
Solid Flat Slab (48"x15")	$170
Solid Flat Slab (60"x12")	$170
Solid Flat Slab (60"x15")	$180
Florida-I; 36	$175
Florida-I; 45	$185
Florida-I; 54	$200
Florida-I; 63	$225
Florida-I; 72	$250
Florida-I; 78	$265
Florida-I; 84	$320
Florida-I; 96	$400
Haunched Florida-I; 78	$700
Haunched Florida-I; 84	$800

1 Price is based on ability to furnish products without any conversions of casting beds and without purchasing of forms. If these conditions do not exist, add the following costs:

Inverted Tee	$202,000
FI Tub	$403,000

3. Cast-in-Place Superstructure Concrete; cost per cubic yard.

Box Girder Concrete; straight	$950
Box Girder Concrete; curved	$1,100
Deck Concrete	$450-$750
Precast Deck Overlay Concrete Class IV	$600

4. Concrete for Pre-cast Segmental Box Girders; cantilever construction; price per cubic yard. For deck area between 300,000 and 500,000 interpolate between the stated cost per cubic yard.

Less than or equal to 300,000 SF	$1250
Less than or equal to 500,000 SF	$1200
Greater than 500,000 SF	$1150

5. Reinforcing Steel; cost per pound: $0.60
6. Post-tensioning Steel; cost per pound.

Strand; longitudinal	$2.50
Strand; transverse	$4.00
Bars	$6.00

7. Railings and Barriers, cost per linear foot.

Traffic Railing[1]	$70
Pedestrian/Bicycle Railings:	
Concrete Parapet (27”)[1]	$65
Single Bullet Railing[1]	$27
Double Bullet Railing[1]	$36
Triple Bullet Railing[1]	$45
Picket Railing (42”) steel	$65
Panel/Picket Railing (42”) aluminum	$50
Panel/Picket Railing (54”) steel	$95
Panel/Picket Railing (54”) aluminum	$60

1 Combine cost of Bullet Railings with Concrete Parapet or Traffic Railing, as appropriate.

8. Expansion joints; cost per linear foot.

Strip seal	$315-$400
Finger joint < 6"	$850
Finger joint > 6"	$1500
Modular 6"	$500
Modular 8"	$700
Modular 12"	$900

C. Retaining Walls.

1. MSE Walls; Cost per square foot

Permanent	$26
Temporary	$14

D. Noise Wall; Cost per square foot.: $25

E. Detour Bridge; Cost per square foot: $55*

* Using FDOT supplied components. The cost is for the bridge proper and does not include approach work, surfacing, or guardrail.

9.2.3 Design Aid for Determination of Reinforcing Steel

In the absence of better information, use the following quantities of reinforcing steel per cubic yard of concrete.

Pile abutments	135
Pile Bents	145
Single Column Piers; Tall (>25 ft)	210
Single Column Piers; Short (<25 ft)	150
Multiple Column Piers; Tall (>25 ft)	215
Multiple Column Piers; Short (<25 ft)	195
Bascule Piers	110
Deck Slabs; Standard	205
Deck Slabs; Isotropic	125
Concrete Box Girders; Pier Segment	225
Concrete Box Girders; Typical Segment	165
Cast-in-Place Flat Slabs (30 ft span x 15" deep)	220

Step Two:

After developing the total cost estimate utilizing the unit cost, modify the cost to account for site condition variables. If appropriate, the cost will be modified by the following variables:

1. For construction over water increase construction cost by 3 percent.
2. For phased construction (over traffic or construction requiring multiple phases to complete the entire cross section of the bridge), add a 20 percent premium to the affected units of the structure.

Step Three:

The final step is a comparison of the cost estimate with historic bridge cost per square foot data. These total cost numbers are calculated exclusively for the bridge cost as defined in the General Section of this chapter. Price computed by Steps 1 and 2 should be generally within the range of cost of as supplied herein. If the cost falls outside the provided range, good justification must be provided.

New Construction (2009 Cost Per Square Foot)		
Bridge Type	**Low**	**High**
Short Span Bridges:		
Reinforced Concrete Flat Slab Simple Span[1]	$92	$160
Pre-cast Concrete Slab Simple Span*	$81	$200
Reinforced Concrete Flat Slab Continuous Span*	NA	
Medium Span Bridges:		
Concrete Deck/ Steel Girder - Simple Span*	$125	$142
Concrete Deck/ Steel Girder - Continuous Span*	$135	$170
Concrete Deck/ Pre-stressed Girder - Simple Span	$66	$145
Concrete Deck/ Pre-stressed Girder - Continuous Span	$83	$211
Concrete Deck/ Steel Box Girder – Span Range from 150' to 280' (for curvature, add a 15% premium)	$100	$165
Segmental Concrete Box Girders - Cantilever Construction, Span Range from 150' to 280'	$130	$160
Movable Bridge - Bascule Spans and Piers	$1,800	$2,000
Demolition Cost:		
Typical	$35	$60
Bascule	$60	$70
Project Type	**Low**	**High**
Widening (Construction Only)	$85	$160

1 Increase the cost by twenty percent for phased construction

9.3 HISTORICAL BRIDGE COSTS

The unadjusted bid cost for selected bridge projects are provided as a supplemental reference for estimating costs. The costs have been stripped of all supplemental items such as mobilization, so that only the superstructure and substructure cost remain.

9.3.1 Deck/Girder Bridges

Project Name and Description	Letting Date	Deck Area (SF)	Cost per SF
Jenson Beach Causeway (890145)	01/02	150,679 78” Bulb-tee, simple span	$59.00
SR 417/Turnpike (770616)	99/00	5,270 AASHTO Type VI	$50.39
US 98/Thomas Dr.(460111)	02/03	167,492 Fl-U Beam	$66.50
SR 704 over I-95 (930183 & 930210)	97/98	14,804 each AASHTO Type IV Simple span	$60.66
SR 700 over C-51 (930465)	97/98	7,153 AASHTO Type II Simple Span	$46.46
SR 807 over C-51 (930474)	98/99	11,493 AASHTO Type III Simple Span	$48.77
SR 222 over I-75 (260101)	00/01	41,911 AASHTO Type III & IV	$63.59
SR 166 over Chipola River (530170)	00/01	31,598 AASHTO Type IV	$48.52
SR 25 over Santa Fe River (260112)	00/01	17,118 AASHTO Type IV	$52.87
SR 71 over Cypress Creek (510062)	00/01	12,565 AASHTO Type III	$49.64
SR 10 over CSX RR (580175)	00/01	12,041 AASHTO Type IV	$54.91
SR 291 over Carpenter Creek (480194)	00/01	7,760 AASHTO Type IV	$59.41
SR 54 over Cypress Creek (140126)	00/01	6,010 AASHTO Type III	$51.48
SR 400 Overpass (750604)	00/01	27,084 AASHTO Type VI	$48.15

Project Name and Description	Letting Date	Deck Area (SF)	Cost per SF
Palm Beach Airport Interchange over I-95 (930485)	99/00	9,763 Steel	$85.50
Turnpike Overpass (770604)	98/99	7,733 Steel 179' Simple Span	$79.20
SR 686 (150241)	99/00	63,387 Steel	$73.31
SR 30 RR Overpass (480195 & 480196)	00/01	6,994 each	$118.35
SR 91 Overpass (over road) (750713)	06/07	38,020 AASHTO Type V	$85.82
SR 91 Overpass (over road) (754147)	06/07	18,785 Steel	$133.18
SR 25 Overpass (over railroad) (160345)	06/07	13,523 AASHTO Type III	$136.36
SR 70 Over Road (949901) Bridge Widening	06/07	3,848 AASHTO Type II	$210.92
SR 710 Over water (930534)	06/07	12,568 Inverted T-Beam 20”	$124.63
SR 50 Over road (750560)	07/08	30,250 Steel Box Girders	$186.94
SR 50 Over road (750561)	07/08	30,250 Steel Box Girders	$185.46
SR 93 Over road (100695)	06/07	9,072 Fl-U Beam 54”	$156.22
SR 93 Over road (100697)	06/07	7,776 Fl-U Beam 72”	$196.81
SR 93 Over road (100699)	06/07	7,776 Fl-U Beam 72”	$202.47
SR 93 Over road (100705)	06/07	14,490 AASHTO Type IV	$96.13
Buckhorn Creek Low Level Bridge (over water) (064122)	06/07	4,181 Cast-in-Place Deck	$142.29
CR 179A West Pittman Creek (524135)	06/07	8,014 Slab (precast)	$108.71

9.3.2 Post - tensioned Concrete Box Girder, Segmental Bridges

Project Name and Description	Letting Date	Deck Area (SF)	Cost per SF
A1A over ICWW (St. Lucie River)(Evans Crary) (890158)	97/98	297,453 Span by Span	$80.50
Palm Beach Airport Interchange at I-95 (930480)	99/00	77,048 Balanced Cantilever	$100.73
Palm Beach Airport Interchange at I-95 (930477)	99/00	20,925 Balanced Cantilever	$96.31
Palm Beach Airport Interchange at I-95 (930479)	99/00	69,233 Balanced Cantilever	$88.49
Palm Beach Airport Interchange at I-95 (930482)	99/00	47,466 Balanced Cantilever	$104.96
Palm Beach Airport Interchange at I-95 (930482)	99/00	81,059 Balanced Cantilever	$101.44
Palm Beach Airport Interchange at I-95 (930483)	99/00	90,926 Balanced Cantilever	$101.57
Palm Beach Airport Interchange at I-95 (930484)	99/00	41,893 Balanced Cantilever	$115.11
Palm Beach Airport Interchange at I-95 (930478)	99/00	20,796 Balanced Cantilever	$95.16
17th Street over ICWW (Ft. Lauderdale) (860623)	96/97	13,5962 Balanced Cantilever	$74.71
SR 704 over ICWW Royal Palm Way (930507 & 930506)	00/01	43,173 each C-I-P on Travelers	$163.88
US 92 over ICWW (Broadway Bridge) Daytona (790188)	97/98	145,588 Balanced Cantilever	$81.93
US 92 over ICWW (Broadway Bridge) Daytona (790187)	97/98	145,588 Balanced Cantilever	$81.93
SR 789 over ICWW (Ringling Bridge) (170021)	00/01	329,096 Balanced Cantilever	$81.43
US 98 over ICWW (Hathaway Bridge) (460012)	00/01	575,731 Balanced Cantilever	$87.72
SR 9 Overpass (over Road/railroad) (720761)	06/07	122,500 Segmental	$125.26

9.3.3 Post-tensioned Cast-in-place Concrete Box Girder Bridge (low level overpass)

Project Name and Description	Letting Date	Deck Area (SF)	Cost per SF
SR 858 over ICWW Hallandale Beach (860619 & 860618)	97/98	29,888 each	$83.25
SR 858 Flyover Hallandale Beach (860620)	97/98	21,777	$81.99
4th Street over I-275	94/95	12,438	$75.21

9.3.4 Bascule Bridge Cost

Deck area is calculated to be coping-to-coping width times overall bascule length including both bascule pier lengths and main span. Costs include all cost for movable span, gates and bascule piers.

Closed Deck Bascule Bridges			
Project Name and Description	**Letting Date**	**Deck Area (SF)**	**Cost per SF**
SR 45 over ICWW Venice (170170 & 170169)	99/00	8,785 each	$768
Royal Palm Way SR 704 over ICWW (930507 & 930506)	00/01	11,535 each	$1,089
SR 858 over ICWW Hallandale Beach (860618 & 860619)	97/98	14,454 each	$811
Ocean Ave. over ICWW Boynton Beach (930105)	98/99	11,888	$1,157
17th Street over ICWW Ft. Lauderdale (860623)	96/97	34,271	$865
2nd Avenue over Miami River (874264)	99/00	29,543	$1,080
SR 699 John's Pass (150253)	04/05	16,500 includes Bascule and approach span	$1,728
SR 699 John's Pass (150254)	04/05	16,500 includes Bascule and approach span	$1,697
SR 933 12nd Ave over Miami River (870662)	04/05	74,470 includes Bascule (30,910) and approach spans (43,560)	$595 (Bascule $1287) (App. spans $105)
SR 7 (5 St/7 Ave) Over the Miami River (870990)	04/05	21,546	$1,950

9.4 BRIDGE DEBRIS QUANTITY ESTIMATION

Requirements for making bridge debris available to other agencies are stated in the ***Project Management Handbook*** and ***PPM*** Volume 1, Sections 13.5.2.3 and 26.9.2.8. Use the following values for calculating the approximate volume of concrete debris that will be generated by demolishing a bridge. For bridge components not shown, use project specific dimensions and details to calculate the approximate volume of debris. Include the estimated volume of debris in the BDR.

Component	CY/LF
18" Inverted T Beam:	0.660
AASHTO Type II Beam:	0.095
AASHTO Type III Beam:	0.144
AASHTO Type IV Beam:	0.203
AASHTO Type V Beam:	0.261
AASHTO Type VI Beam:	0.279
72" Florida Bulb T Beam:	0.237
78" Florida Bulb T Beam:	0.284
48" Florida-U Beam:	0.311
54" Florida-U Beam:	0.328
63" Florida-U Beam:	0.355
72" Florida-U Beam:	0.381
14" Square Pile:	0.050
18" Square Pile:	0.083
24" Square Pile:	0.148
30" Square Pile (w/18" diameter void):	0.166
32" New Jersey Shape Traffic Railing:	0.075
32" F Shape Traffic Railing:	0.103
32" F Shape Median Traffic Railing:	0.120
Florida-I; 36	0.207
Florida-I; 45	0.224
Florida-I; 54	0.240
Florida-I; 63	0.256
Florida-I; 72	0.272
Florida-I; 78	0.283
Florida-I; 84	0.294
Florida-I; 96	0.315

10 PEDESTRIAN BRIDGES

10.1 GENERAL

A. The criteria covers engineered steel and concrete pedestrian bridge superstructures, including proprietary trusses, and the associated substructures, ramps, stairs, etc. crossing over FDOT roadway or placed on FDOT right-of-way.

B. Minor timber or aluminum structures associated with boardwalks, docks or fishing pier projects are not covered by these policies except that the loading shall meet requirements defined herein.

C. Wooden trusses or timber beam structures shall not cross over FDOT roadway facilities.

D. Aluminum or Fiber-reinforced polymer (FRP) (i.e. plastic, carbon fiber, or fiberglass) pedestrian bridges are not allowed.

E. Comply with ADA requirements for ramps and railings. See ***SDG*** 1.1.6 (ADA on Bridges).

10.2 REFERENCED STANDARDS

Reference Standards are in accordance with Section 8.2 of the ***PPM*** (Volume 1).

10.3 DESIGNER QUALIFICATIONS (Rev. 01/12)

A. All design calculations and design details or any design changes must be signed and sealed by a Professional Engineer licensed in the State of Florida.

B. For FDOT projects, engineering design firms working directly for the FDOT or Contractor's EORs designing prefabricated steel truss pedestrian bridges meeting the requirements of ***PPM***, Volume 1, Article 8.7.2 shall be pre-qualified in accordance with Rule 14-75, work group 4.2.2.

C. Engineering firms designing private, permitted bridges crossing FDOT roadway facilities need not be pre-qualified in accordance with Rule 14-75, but must comply with Rule 14-75 for minimum personnel and technical experience.

10.4 DESIGN (Rev. 01/12)

A. All pedestrian bridge structures shall be designed in accordance with the following:

- AASHTO LRFD Bridge Design Specifications (AASHTO)
- AASHTO Guide Specifications for the Design of Pedestrian Bridges (Guide Spec.)
- FDOT Plans Preparation Manual (***PPM***)
- FDOT Structures Manual

B. Prefabricated Steel Truss Pedestrian Bridges meeting the requirements of ***PPM***, Volume 1, Section 8.7.2 shall be designed and detailed as follows:

1. Fully design and detail foundation and substructure in the plans.
2. Fully design and detail all approach structures including non-truss approach spans, ramps, steps/stairways, approach slabs, retaining walls, etc. in the plans.
3. Include general plan and elevation indicating minimum aesthetic requirements for the prefabricated steel truss bridge in the plans (see ***PPM***, Volume 1, Appendix 8-1).
4. Prefabricated steel truss superstructure is to be designed and detailed by the Contractor's EOR after award of the contract. Design calculations, technical specifications, and fully detailed shop drawing are to be submitted to the Engineer for review and approval prior to fabrication. Components to be included in the shop drawings include trusses, floor system, lateral bracing, deck, railing/fencing, deck joints, bearing assemblies, etc.

C. It is desirable to limit the maximum overall width of prefabricated steel truss bridges to 12 feet. This will eliminate the need for a spliced section.

D. Pedestrian bridges not meeting the requirements of ***PPM***, Volume 1, Article 8.7.2 shall be custom designed and fully detailed in the plans.

E. Design all pedestrian bridges for a 75 year design life.

F. Clearance criteria for pedestrian bridges shall be as follows:

1. Vertical clearance criteria shall be as per the current ***PPM***, Volume 1, Table 2.10.1.
2. Pedestrian bridges that accommodate horse travel shall have a minimum of 12 feet vertical clearance above the bridge deck.
3. Horizontal clearance shall be in accordance with ***PPM***, Volume 1, Article 2.11. Horizontal clearances shall take into account future widening of the roadway below.

G. Camber DL/LL Deflections - Contrary to Guide Spec. [5] use the following to determine maximum deflections for pedestrian bridges:

1. Pedestrian Load Span/500
2. Truck Load Span/500
3. Cantilever arms due to service pedestrian live load . . . . . Cantilever Length/300
4. Horizontal deflection due to lateral wind load Span/500
5. The pedestrian bridge shall be built to match the plan profile grade after all permanent dead load has been applied.

H. The minimum pile size for pedestrian bridges is 14-inch square piling. However, the provisions of Section 3.5.1.F.3 still apply.

I. When determining the capacity of reinforced concrete decks, capacity due to stay-in-place forms shall be disregarded.

10.5 LOADING

Loading shall be as specified in Guide Spec. [3] with the following exceptions:

Wind Loads - A wind load of the following intensity shall be applied horizontally at right angles to the longitudinal axis of the structure. The wind load shall be applied to the projected vertical area of all superstructure elements on the leeward truss.

1. For Trusses and Arches: 75 pounds per square foot (90 pounds per square foot for Broward, Collier, Escambia, Indian River, Martin, Miami/Dade, Monroe, Santa Rosa, St. Lucie and Palm Beach counties)
2. For Girders and Beams: 50 pounds per square foot (60 pounds per square foot for Broward, Collier, Escambia, Indian River, Martin, Miami/Dade, Monroe, Santa Rosa, St. Lucie and Palm Beach counties.)
3. For open truss bridges, where wind can readily pass through the trusses, bridges may be designed for a minimum horizontal load of 35 pounds per square foot (42 pounds per square foot for Broward, Collier, Escambia, Indian River, Martin, Miami/Dade, Monroe, Santa Rosa, St. Lucie and Palm Beach counties) on the full vertical projected area of the bridge, as if enclosed.
4. Submit wind pressures for bridges over 75 feet high or with unusual structural features to FDOT for approval.
5. For cable stayed pedestrian bridges, see ***LRFD*** [3.8.1.2]. Increase wind pressures for Broward, Collier, Escambia, Indian River, Martin, Miami/Dade, Monroe, Santa Rosa, St. Lucie and Palm Beach counties by 20 percent.

10.6 MATERIALS (Rev. 01/12)

A. Require that all materials be in compliance with the applicable ***Specifications***.

B. Careful attention shall be given in selecting combinations of metal components that do not promote dissimilar metals corrosion.

C. Specify ASTM A500 Grade B or C or ASTM A847 for structural tubing: Minimum thickness shall be 1/4" for primary members and 3/16" for verticals and diagonals.

D. Obtain approval from the District Structures Design Engineer prior to specifying unpainted weathering steel.

E. In the design of Steel HSS (Hollow Structural Section), use a design wall thickness of 0.93 times the nominal wall thickness to ensure safety.

F. Aluminum is allowed only for railing and fence enclosure elements. Isolate aluminum from concrete components at the material interface.

G. Design and detail cast-in-place concrete decks. See ***SDG*** Table 1.4.2-1 for concrete cover requirements.

H. Comply with ***SDG*** 1.3 Environmental Classification.

I. The use of plastic lumber for boardwalk applications is preferred. Specify plastic lumber meeting the requirements of ***Specification*** 973 or other project specific plastic lumber as directed by the District. Only non-structural components may be constructed of plastic lumber. Structural members such as beams, stringers, posts, etc. must be made of pressure-treated lumber or other suitable material allowed in this section. Follow all manufacturer's instructions for use and installation of plastic lumber. Plastic lumber is not allowed on pedestrian bridges.

10.7 STEEL CONNECTIONS (Rev. 01/12)

A. Field welding is not allowed except as provided in ***SDG*** 5.11.

B. Welding - Meet the requirements of ***Specifications***, Section 460.

C. Bolting Criteria:

1. Design bolted connections per ***SDG*** Chapter 5 with the following exception.
2. Bearing type connections are permitted only for bracing members.

D. Tubular Steel Connections:

1. Open-ended tubing is not acceptable.
2. Prior to bolting of field sections tubular members shall be capped and fully sealed with the following exception. Weep holes shall be provided at the low point of all members to allow for drainage of water accumulated inside the members during transport and erection. After erection is complete and prior to painting, the weep holes shall be sealed with silicone plugs.
3. Require that all field splices be shop fit.
4. Specify or show field sections bolted together using splice plates.
5. Direct Tension Indicators (DTI) are prohibited in bolted connections.
6. When through bolting is necessary, stiffen the tubular section to ensure the shape of the tubular section is retained after final bolting.

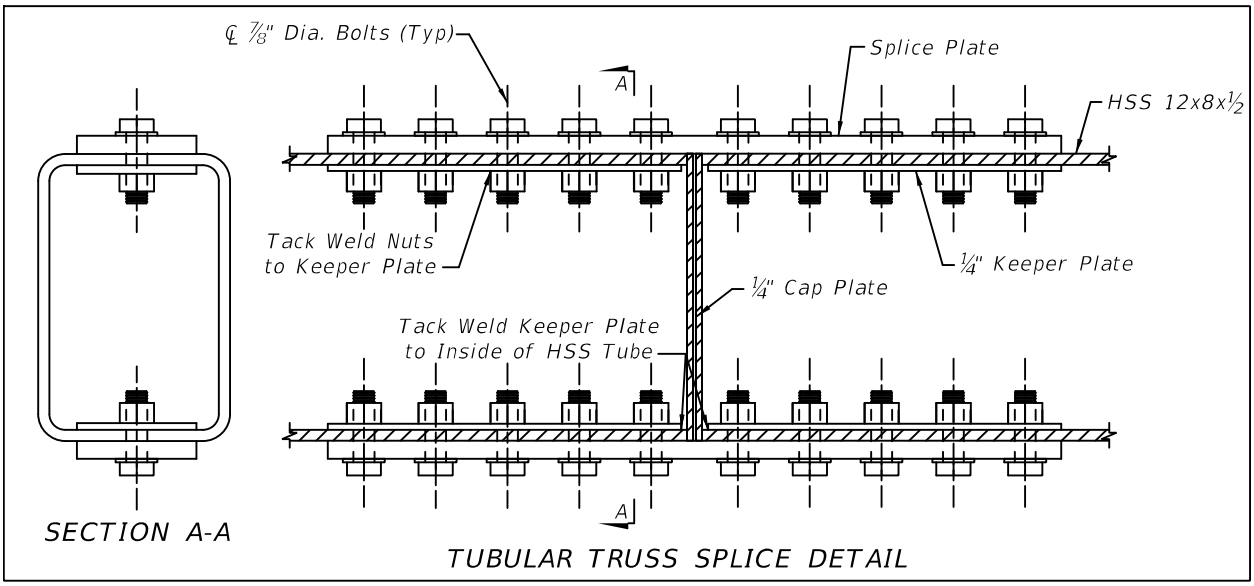

E. Vibrations: Limits on vibration shall be as specified in Guide Spec. [6]. Vibration frequency shall be checked under temporary construction conditions.

10.8 CHARPY V-NOTCH TESTING

A. Require ASTM A709 Charpy V-Notch testing for all structural steel tension members.

B. Require Impact testing requirements as noted below:

1. Test non-fracture critical tension members in accordance with ASTM A709 (latest version).
2. Primary tension chords in a two truss bridge may be considered non-fracture critical due to frame action.
3. Test fracture critical tension members in accordance with ASTM A709 (latest version).
4. Test tubular tension members (ASTM A500) in accordance with Section 962 of the ***Specifications***.
5. Cross frames, transverse stiffeners, and bearing stiffeners not having bolted attachments and expansion joints do not need to be tested.

10.9 CABLE-STAYED PEDESTRIAN BRIDGES

A. Design stay systems to meet the same durability and protection requirements as FDOT post-tensioning systems for anchors, tendons or P.T. bars. See ***SDG*** 4.5.

B. Design cable-stay structures for stay removal and replacement such that any one stay can be removed.

10.10 PAINTING/GALVANIZING

A. Specify Paint systems in accordance with the ***Specifications***, Section 560 and 975. See ***SDG*** 5.12.

B. Coatings are not required for the interior of tubular components.

C. Consider the suitability of the fabricated component for galvanizing. Hot-dip galvanizing may be used where entire steel components can be galvanized after fabrication and where project specific aesthetic requirements allow.

D. Specify galvanizing in accordance with the ***Specifications***, Section 962.

E. Galvanizers must be on the ***State Materials Office Approved Materials/Producers*** list.

F. Welding components together after galvanizing is not acceptable.

10.11 ERECTION

A. Design and detail pedestrian bridge plans to minimize the disruption of traffic during bridge erection.

B. Include a note on the plans that erection over traffic is prohibited.

C. Include a note on the plans that the Contractor's Specialty Engineer is responsible for designing a falsework system capable of supporting portions of the superstructure during erection.

D. The erection of pedestrian structures will be inspected per ***Specifications*** 460 or 450.

10.12 RAILINGS/ENCLOSURES

A. Design pedestrian railings in accordance with the Design Criteria located in the appropriate ***Instructions for Design Standards (IDS)*** 850 Series or 860 Series.

B. Provide ADA compliant handrails as required. Occasional use of the bridge by maintenance or emergency vehicles generally does not warrant the use of a crash tested combination pedestrian / traffic railing.

C. Provide railings options as directed by the District as follows:

1. 42" Pedestrian/Bicycle railing (minimum)
2. 54" Special Height Bicycle railing
3. Open top fence / railing combination
4. Full enclosure fence / railing combination
5. Open top cladding / railing combination (glass, steel panel, concrete panel, etc.)
6. Full enclosure cladding / railing combination

D. Utilize FDOT standard fence designs or connection details from ***Design Standards*** Index 810, 811, and 812 where applicable

10.13 DRAINAGE

A. Design and detail drainage systems as required. See ***SDM*** Chapter 22.

B. Provide curbs, drains, pipes, or other means to drain the superstructure pedestrian deck. Drainage of the superstructure onto the roadway underneath is not allowed.

C. Conform to ADA requirements for drainage components.

10.14 CORROSION RESISTANT DETAILS

A. Provide designs such that water and debris will quickly dissipate from all surfaces of the structure.

B. See ***SDG*** 5.12 Corrosion Protection.

10.15 FABRICATOR REQUIREMENTS

A. Steel Structures

1. Require that fabricators be qualified in accordance with ***Specifications***, Section 6-8 and Section 460.
2. Require that pedestrian bridge fabricators hold a current AISC Quality Certification for Major Steel Bridges except an AISC Quality Certification for Simple Steel Bridge Structure is sufficient for pedestrian bridges consisting of un-spliced rolled beams or if fabricating minor bridge components.

B. Concrete Structures

1. Require that precasters be qualified in accordance with ***Specifications***, Section 6-8 and Section 450.
2. Require that pedestrian bridge precasters be PCI certified.

C. All pedestrian bridges will be fully inspected using FDOT inspection procedures for typical steel and concrete structures.

10.16 LIGHTING / ATTACHMENTS

A. Design lighting levels per the latest edition of the ***Illuminating Engineering Society of North America Lighting Handbook (IES)***. Use the requirements for pedestrian walkways.

B. For tubular structures, design any attachment, including electrical wiring, signs, signals, etc., strapped to the bridge. The tapping of holes into the structural tubular members is not allowed.

C. For wind loads, design lighting attachments as per ***LRFD*** and the ***Standard Specifications for Structural Supports for Highway Signs, Luminaires, and Traffic Signals***.

10.17 MAINTENANCE AND INSPECTION ATTACHMENTS

A. Inspections will be performed in accordance with the Department's current procedure and criteria and the FDOT maintenance guidelines.

B. The inspection and maintenance criteria of private permitted bridges for the spans that cross FDOT roadway facilities are the same as for public bridges.

10.18 PERMIT STRUCTURES (Rev. 01/12)

A. Only spans crossing FDOT roadway facilities and the supporting piers and foundations will be reviewed by FDOT.

B. Design, fabrication, and erection of non-FDOT structures placed over FDOT roadways or on FDOT right-of-ways will comply with the requirements of this chapter and Chapter 8 of the ***PPM***, Volume 1.

VOLUME 1 - REVISION HISTORY

Please note, the words "should" and "may" have been changed to the word "shall", and associated language has been changed to the active-imperative voice at numerous locations throughout the manual.

1.1.3 ..... Deleted cross reference to Drainage Manual.

1.4.1 ..... Deleted Paragraph B and renumbered subsequent Paragraphs.

1.4.2 ..... Changed cover requirements for pedestals and expanded Figure 1.4.2-5 to include pier caps. Revised footnote #2 in Table 1.4.2-1.

1.4.4 ..... Relocated section from SDG 3.9 and expanded to include superstructures.

1.5 ..... Added commentary to Paragraph A.

1.6 ..... Revised entire section to include undercut expansion anchors.

1.9 ..... Added new Section.

2.4 ..... Added criteria for wind loads on beams, girders, trusses and arches; Added gust effect factor and pressure coefficient for sound barriers.

2.6.4 ..... Added design speed requirement to Paragraph C.1.

2.6.8 ..... Revised reference to vehicular collision force to reference LRFD instead of giving a specific value.

2.7.1 ..... Deleted Paragraph E.

2.9 ..... Expanded section.

2.10 ..... Revised Redundancy Factors Table to differentiate between I-girders and box girders.

2.12 ..... Deleted Paragraph D.

3 ..... Added criteria for sound barriers.

3.1 ..... Added Paragraph E.

3.3 ..... Changed cross reference to HEC-23.

3.5.1 ..... Revised Paragraph F.4 to address pedestrian bridges.

3.5.10 ..... Modified Paragraph F per SDB C11-03.

3.5.12 ..... Modified Table 3.5.12-1 per SDB C11-07.

3.6.1 ..... Revised minimum drilled shaft size from 36 to 42 inches; Added commentary.

3.6.2 ..... Reworded Paragraph C and added commentary.

3.6.3 ..... Revised uplift criteria in Table 3.6.3-1.

3.6.6 ..... Added Paragraphs F and G.

3.6.9 ..... Clarified Paragraph B.

3.9 ..... Moved to SDG 1.4.4.

3.10 ..... Clarified Paragraph A. Moved segmental box girder criteria from Paragraph E to SDG 4.6.8.C.

3.11 ..... Clarified Paragraph G; Added Paragraph Q and commentary and Paragraph R.

3.12 ..... Added cross references in footnotes of Table 3.12-1.

3.12.12 ..... New Section added per SDB C11-05.

3.13.1 ..... Revised Paragraphs C and Commentary.

3.13.2 ..... Corrected equation in Figure 3.13.2-3; Corrected cross reference in Figures 3.13.2-3 and 3.13.2-4; Clarified Paragraph J.1.c; Clarified Paragraph M requirements and added drilled shafts; Added Paragraph P per SDB C11-05.

3.14 ..... Revised entire section per SDB C11-08.

3.15.2 ..... Added second paragraph.

3.16 ..... Added new section.

4.1.3 ..... Expanded commentary in Paragraph C.

4.1.7 ..... Added new section per SDB C11-09.

4.1.8 ..... Added new section.

4.2.2 ..... Revised Paragraph A to reflect planing requirements in Specification 400. Deleted references to Inverted-T Beams in Paragraphs A and B. Added provision for pedestrian bridges and movable spans in Paragraph A. Deleted Paragraph C, added new Paragraphs E and F and renumbered subsequent Paragraphs.

4.2.14 ..... Added new Section.

4.3.4 ..... Added provisions for spliced post-tensioned girders.

4.5.6 ..... Added requirements for length of end blocks.

4.5.8 ..... Added references to SDM Chapter 23 in Paragraph D and Commentary.

4.6.1 ..... Changed access door material from aluminum to steel; Added access envelope requirements in Paragraph C.4.

4.6.3 ..... Expanded Paragraph C requirements related to future PT. Deleted "previous practice" details. Added Figures 4.6.3-1 and 4.6.3-2.

4.6.6 ..... Deleted "previous practice" details and added Figure 4.6.6-1.

4.6.8 ..... Added Paragraph C.

4.7 ..... Added Paragraph B.

5.3.1 ..... Revised Paragraphs A and B and commentary.

5.6.2 ..... Changed access door material from aluminum to steel.

5.11 ..... Added provisions for field welding of sole plates to Paragraph A.

5.12.5 ..... Reworded section for clarity and added provisions for the use of galvanized A325 bolts on painted structural steel.

6.5 ..... Added paragraph G.

6.5.1 ..... Modified last sentence of Paragraph A per SDB C11-10; Added clarification regarding use of plain pads.

6.7 ..... Added references to MASH per SDB C11-02.

6.7.4 ..... Deleted reference to Structures Standards from Tables; Revised requirement for retrofitting traffic railings on post-tensioned slabs.

6.7.8 ..... Deleted section content; Added cross reference to PPM.

6.7.9 ..... Relocated previous Section 6.7.9 Sidewalks to SDG 6.9; Added new Section per SDB C11-06.

6.8 ..... Added requirement to show vertical displacements in the plans and added commentary.

6.9 ..... New Section relocated and modified from old Section 6.7.9 Sidewalks.

7.1.1 ..... Added references to LRFR in Paragraphs A and B. Deleted reference to LFR in Paragraph C. Revised Paragraph C.1. Revised Figure 7.1.1-1. Reworded Paragraph E.

7.3.6 ..... Expanded requirement to include scour considerations.

7.3.7 ..... Revised Paragraph C to reference to SDG 4.2.14.

7.6 ..... Revised Paragraph A.3 and added Commentary.

8.7.17 ..... Deleted cross reference to obsolete Standard.

9 ..... Revised unit prices as noted.

10.3 ..... Modified Paragraph B per SDB C11-07.

10.4 ..... Modified entire Section per SDB C11-07.

10.6 ..... Modified Paragraphs C and D per SDB C11-07.

10.7 ..... Revised Paragraph C to refer to SDG Chapter 5. Modified Paragraph D per SDB C11-07.

10.18 ..... Deleted Section 10.18 Proprietary Structures and renumbered subsequent Section per SDB C11-07.