ALLOWABLE CONNECTION TYPES FOR SUBSTRUCTURES

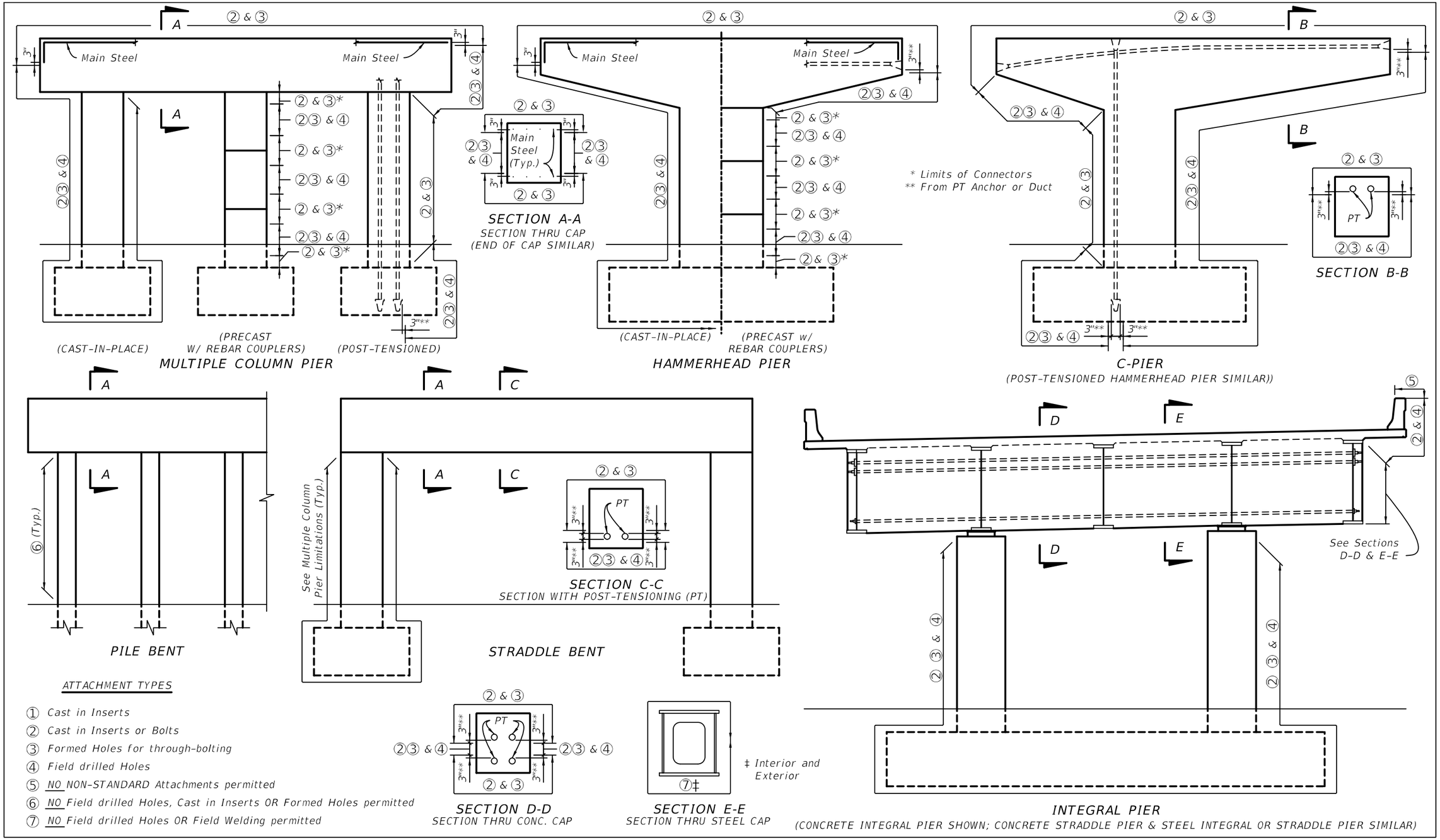
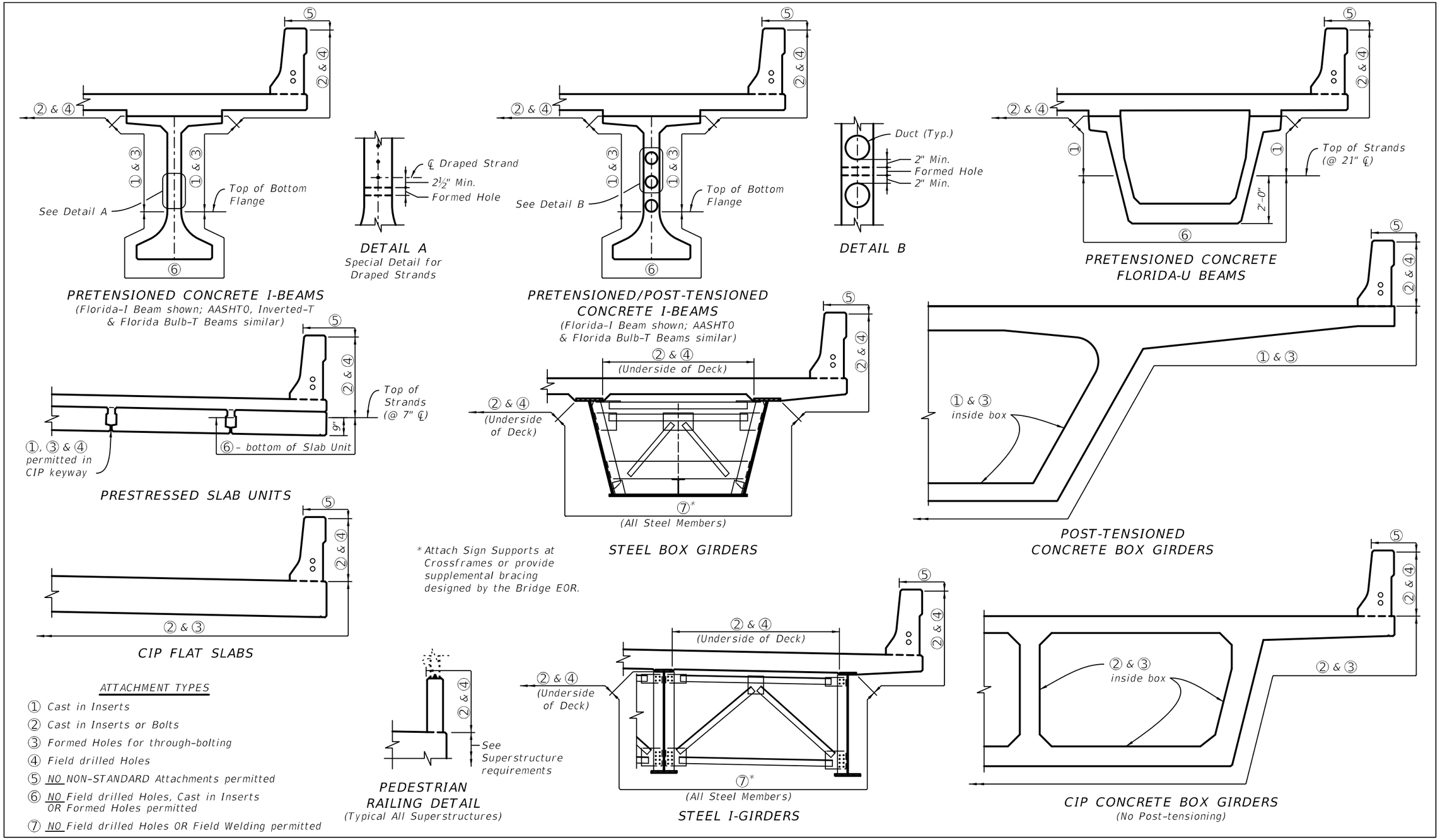
ALLOWABLE CONNECTION TYPES FOR SUPERSTRUCTURES