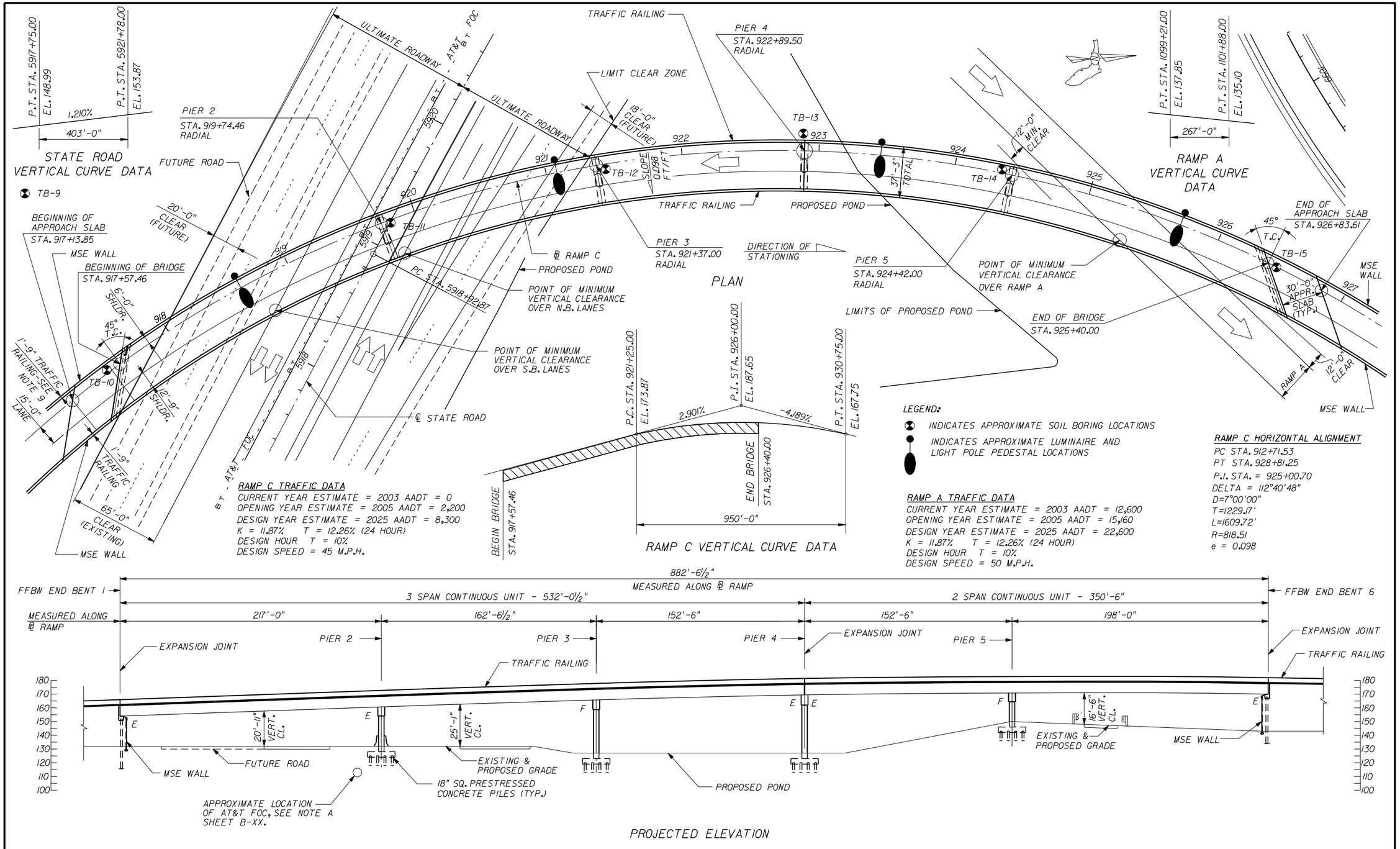

REVISIONS					
DATE	BY	DESCRIPTION	DATE	BY	DESCRIPTION

STRUCTURES DESIGN OFFICE
CENTRAL OFFICE
605 Suwannee Street, MS 33
Tallahassee, Florida 32399-0450

DRAWN BY: XXX MM-YY
CHECKED BY: XXX MM-YY
DESIGNED BY: XXX MM-YY
CHECKED BY: XXX MM-YY

STATE OF FLORIDA
DEPARTMENT OF TRANSPORTATION

ROAD NO.	COUNTY	FINANCIAL PROJECT ID

SHEET TITLE: PLAN AND ELEVATION EXAMPLE 1 CURVED STEEL FLYOVER RAMP

PROJECT NAME:

REF. DWG. NO.

SHEET NO.

NOTE:
ALL EXISTING UTILITIES IN CONFLICT WITH PROPOSED BRIDGE SHALL BE RELOCATED BY OTHERS PRIOR TO THE START OF CONSTRUCTION.

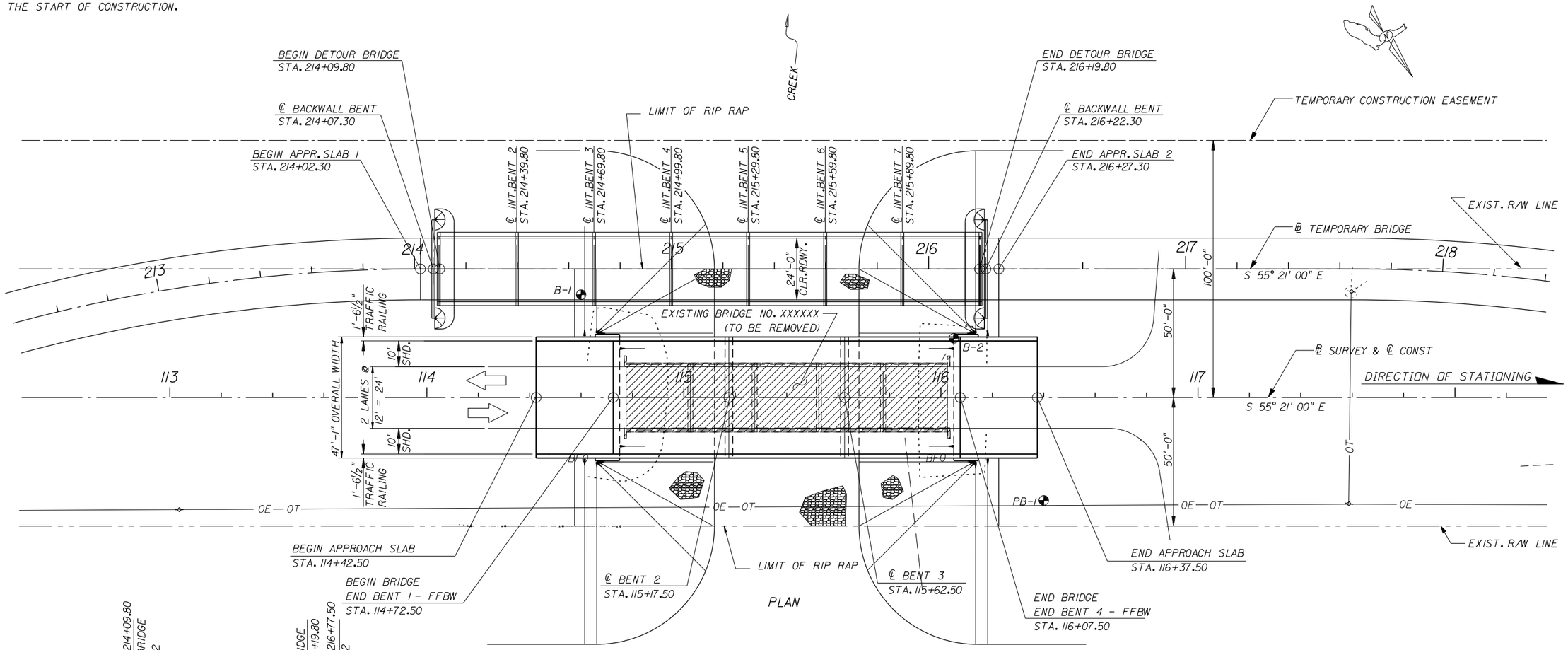

VERTICAL GRADE INFORMATION DETOUR BRIDGE

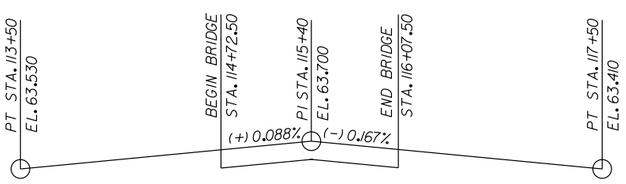

VERTICAL GRADE INFORMATION PROPOSED BRIDGE

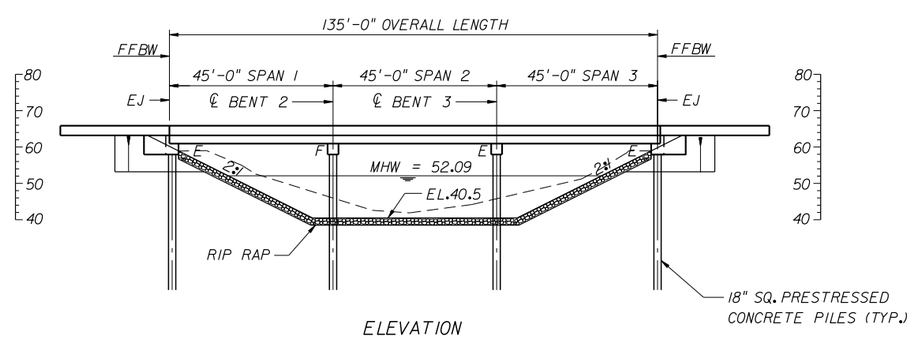

ELEVATION

TRAFFIC DATA - CR 523

2002 ADT = 4,117
2022 ADT = 6,426
K = 9.5%
D = 60%
DESIGN SPEED = 50MPH

LEGEND:
INDICATES SOIL BORING LOCATION
INDICATES EXISTING STRUCTURE TO BE REMOVED
EJ INDICATES DECK EXPANSION JOINT

BRIDGE NO. XXXXXX

REVISIONS					
DATE	BY	DESCRIPTION	DATE	BY	DESCRIPTION

STRUCTURES DESIGN OFFICE
CENTRAL OFFICE
605 Suwannee Street, MS 33
Tallahassee, Florida 32399-0450

DRAWN BY: XXX MM-YY
CHECKED BY: XXX MM-YY
DESIGNED BY: XXX MM-YY
CHECKED BY: XXX MM-YY

STATE OF FLORIDA
DEPARTMENT OF TRANSPORTATION

ROAD NO.	COUNTY	FINANCIAL PROJECT ID

SHEET TITLE: PLAN AND ELEVATION EXAMPLE 2
BRIDGE REPLACEMENT WITH TEMPORARY DETOUR BRIDGE

PROJECT NAME:

REF. DWG. NO.

SHEET NO.

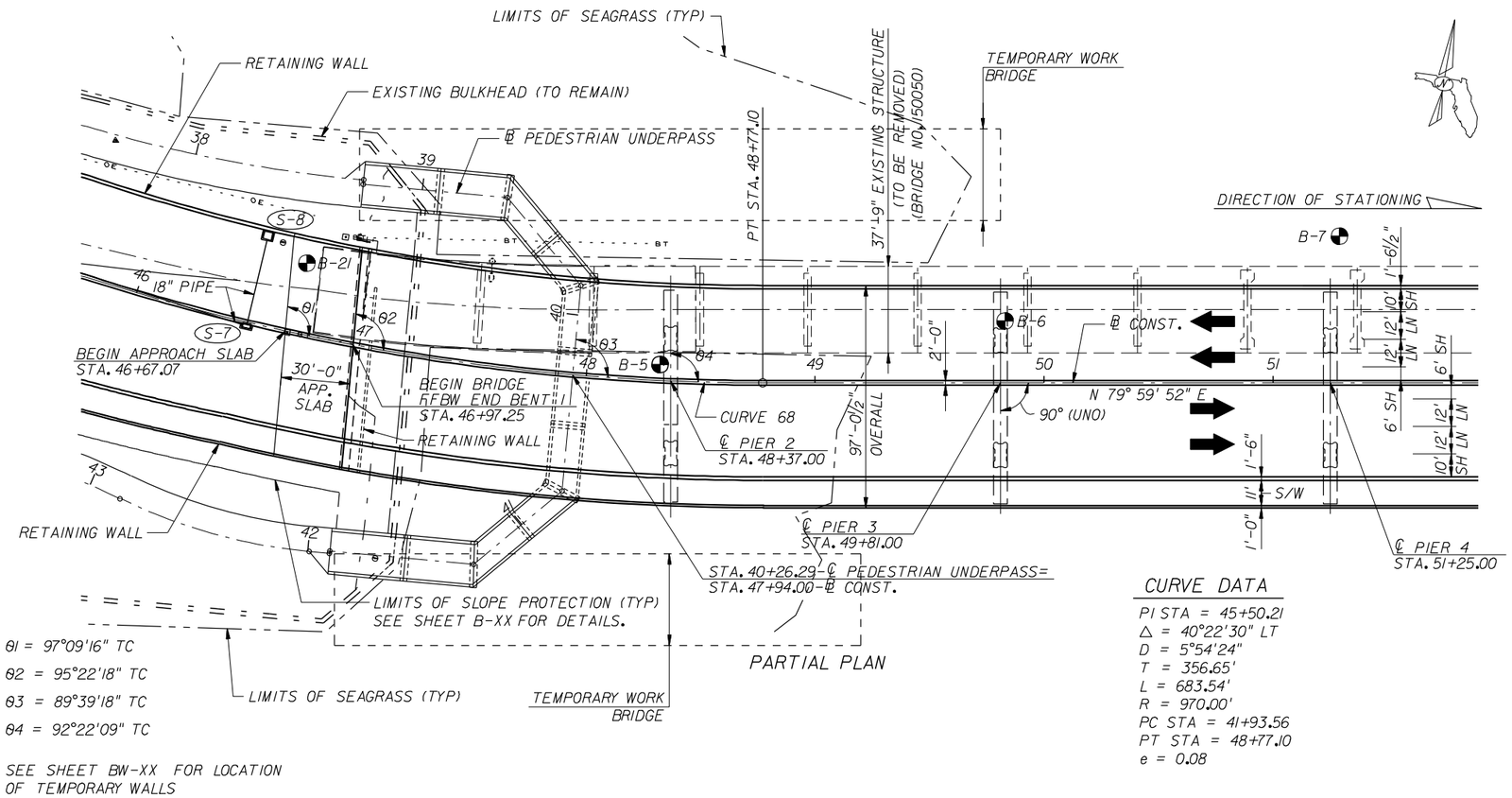

PARTIAL PLAN

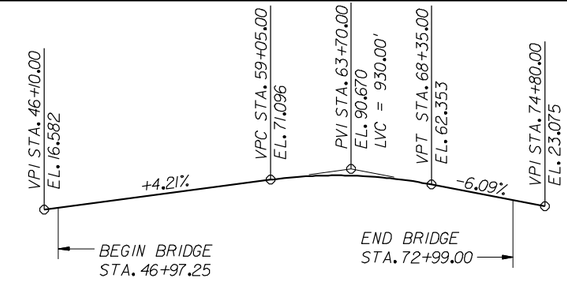

VERTICAL ALIGNMENT ℄ CONST. & PGL

CURVE DATA

PI STA = 45+50.21
Δ = 40°22'30" LT
D = 5°54'24"
T = 356.65'
L = 683.54'
R = 970.00'
PC STA = 41+93.56
PT STA = 48+77.10
e = 0.08

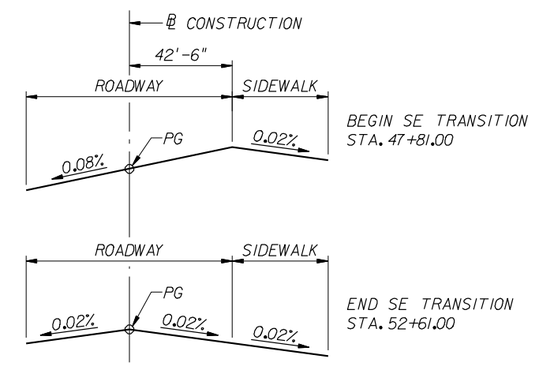

SUPERELEVATION TRANSITION DATA

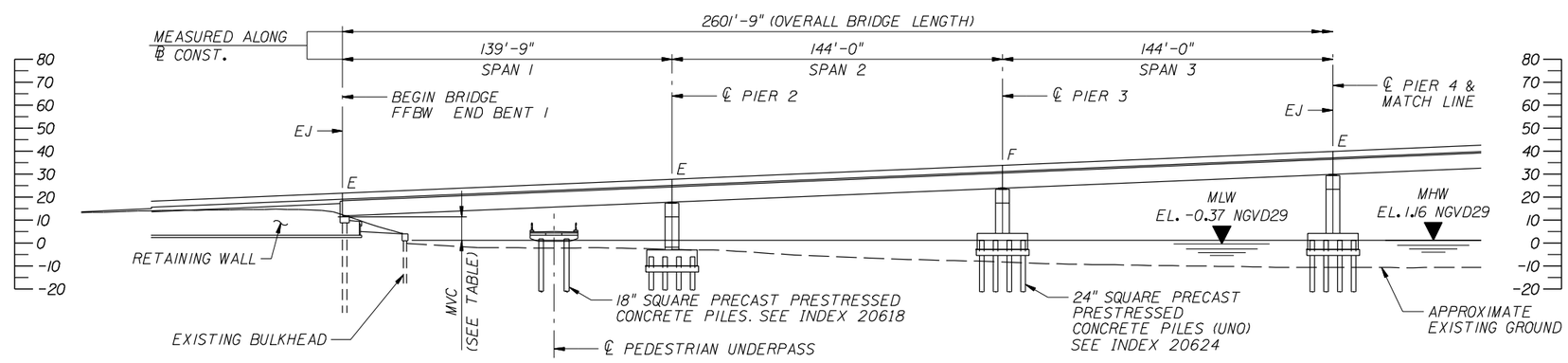

PARTIAL ELEVATION

LEGEND

◐ APPROXIMATE LOCATION OF SOIL BORING

EJ = DECK EXPANSION JOINT

(S-X) = DRAINAGE STRUCTURE, SEE ROADWAY PLANS

MEAN HIGH WATER, MHW +1.16 NGVD29
MEAN LOW WATER, MLW -0.37 NGVD29
DESIGN HIGH WATER (50 YEAR EVENT), DHW +8.10 NGVD

NOTE:

SEE LIGHTING PLANS, FOR LIGHT POLE AND PEDESTRIAN LIGHT LOCATIONS.

TRAFFIC DATA

ROADWAY	AADT YEAR 2002	AADT YEAR 2026	DESIGN SPEED	% TRUCKS	K	D
SR XXX	16,800	26,500	45 MPH	3.0	0.10	0.53

BRIDGE NO. XXXXXX

REVISIONS					
DATE	BY	DESCRIPTION	DATE	BY	DESCRIPTION

STRUCTURES DESIGN OFFICE
CENTRAL OFFICE
605 Suwannee Street, MS 33
Tallahassee, Florida 32399-0450

DRAWN BY: XXX MM-YY
CHECKED BY: XXX MM-YY
DESIGNED BY: XXX MM-YY
CHECKED BY: XXX MM-YY

STATE OF FLORIDA
DEPARTMENT OF TRANSPORTATION

ROAD NO.	COUNTY	FINANCIAL PROJECT ID

SHEET TITLE: PLAN AND ELEVATION EXAMPLE 3
MULTI-SHEET PLAN AND ELEVATION (SHEET 1 OF 5)

PROJECT NAME:

REF. DWG. NO.

SHEET NO.

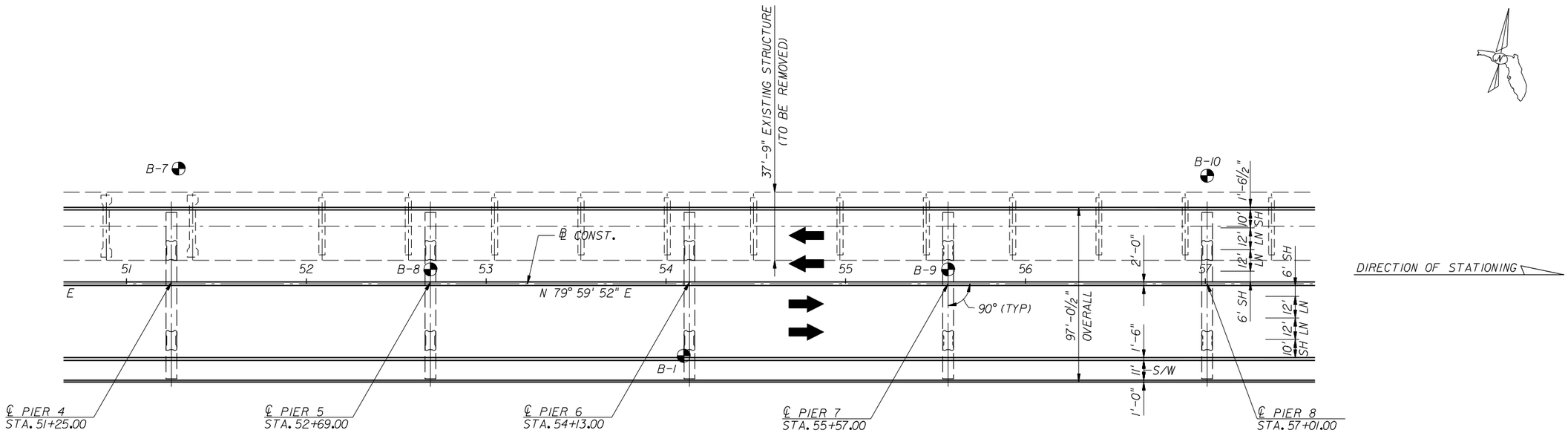

PARTIAL PLAN

LEGEND

APPROXIMATE LOCATION OF SOIL BORING

EJ = DECK EXPANSION JOINT

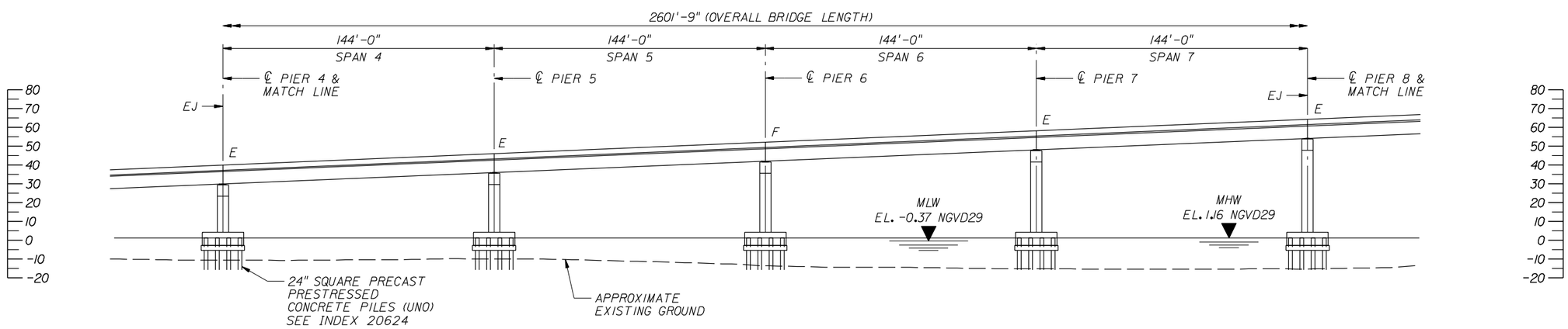

PARTIAL ELEVATION

NOTE:

SEE LIGHTING PLANS, FOR LIGHT POLE AND PEDESTRIAN LIGHT LOCATIONS.

BRIDGE NO. XXXXXX

REVISIONS					
DATE	BY	DESCRIPTION	DATE	BY	DESCRIPTION

STRUCTURES DESIGN OFFICE
CENTRAL OFFICE
605 Suwannee Street, MS 33
Tallahassee, Florida 32399-0450

DRAWN BY: XXX MM-YY
CHECKED BY: XXX MM-YY
DESIGNED BY: XXX MM-YY
CHECKED BY: XXX MM-YY

STATE OF FLORIDA
DEPARTMENT OF TRANSPORTATION

ROAD NO.	COUNTY	FINANCIAL PROJECT ID

SHEET TITLE: PLAN AND ELEVATION EXAMPLE 3
MULTI-SHEET PLAN AND ELEVATION (SHEET 2 OF 5)

PROJECT NAME:

REF. DWG. NO.

SHEET NO.

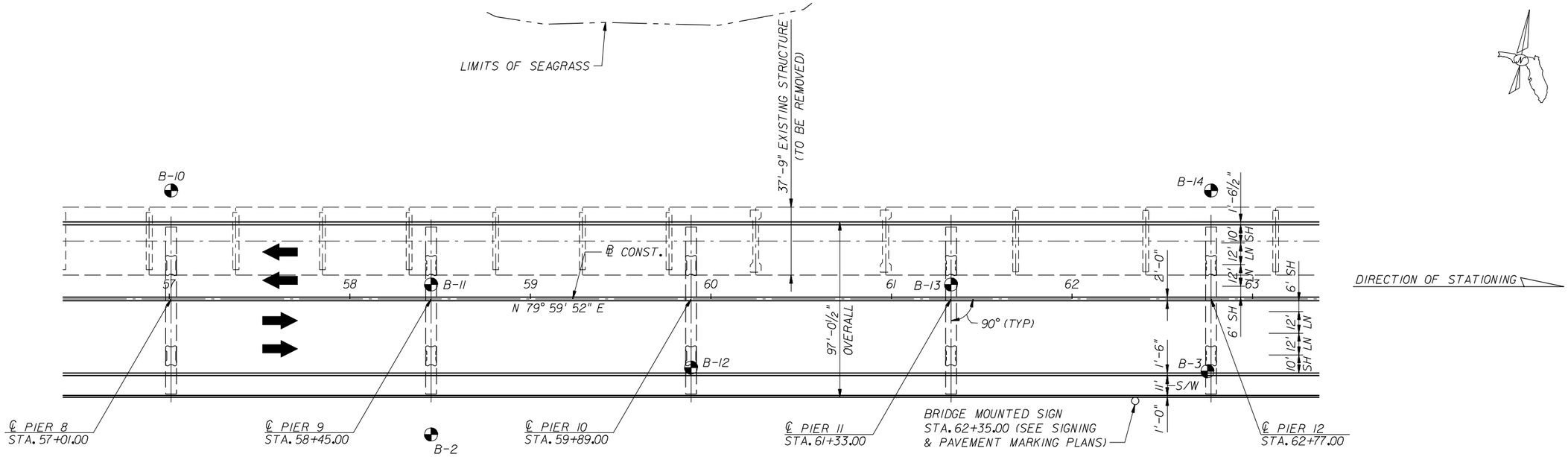

PARTIAL PLAN

LEGEND

APPROXIMATE LOCATION OF SOIL BORING

EJ = DECK EXPANSION JOINT

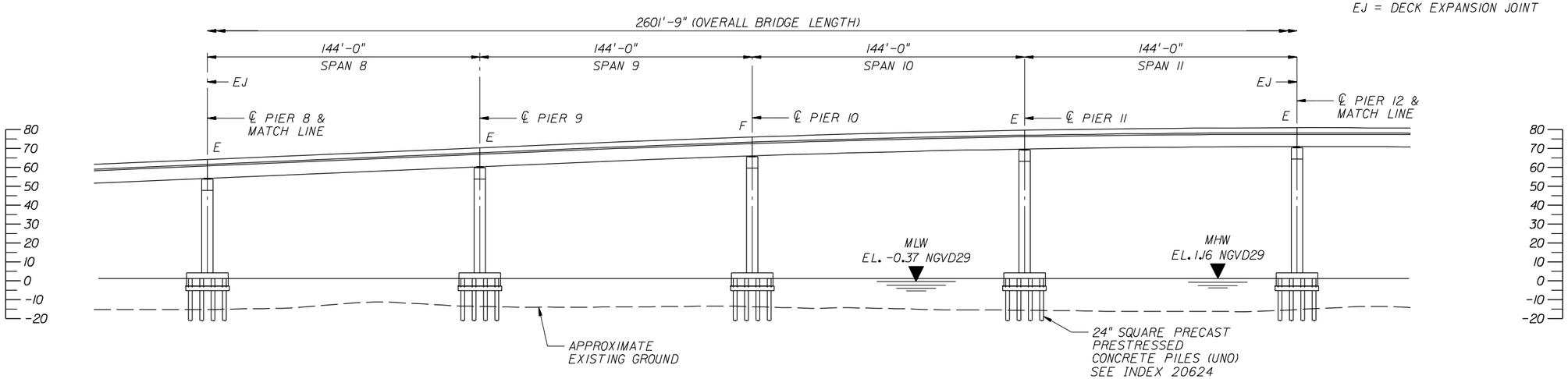

PARTIAL ELEVATION

NOTE:

SEE LIGHTING PLANS, FOR LIGHT POLE AND PEDESTRIAN LIGHT LOCATIONS.

BRIDGE NO. XXXXXX

REVISIONS					
DATE	BY	DESCRIPTION	DATE	BY	DESCRIPTION

STRUCTURES DESIGN OFFICE
CENTRAL OFFICE
605 Suwannee Street, MS 33
Tallahassee, Florida 32399-0450

DRAWN BY: XXX MM-YY
CHECKED BY: XXX MM-YY
DESIGNED BY: XXX MM-YY
CHECKED BY: XXX MM-YY

STATE OF FLORIDA
DEPARTMENT OF TRANSPORTATION

ROAD NO.	COUNTY	FINANCIAL PROJECT ID

SHEET TITLE: PLAN AND ELEVATION EXAMPLE 3
MULTI-SHEET PLAN AND ELEVATION (SHEET 3 OF 5)

PROJECT NAME:

REF. DWG. NO.

SHEET NO.

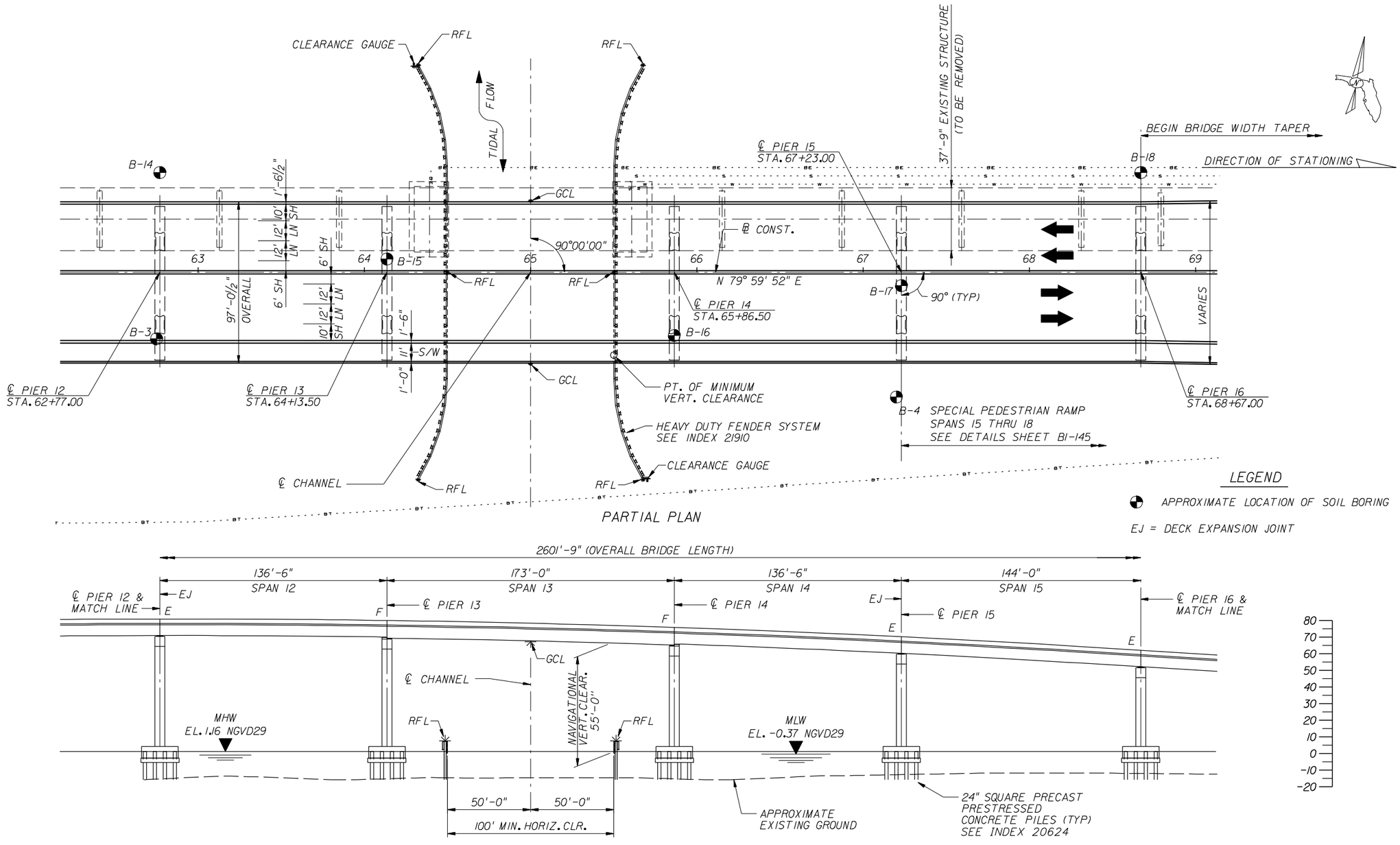

NOTE:

SEE LIGHTING PLANS, FOR LIGHT POLE AND PEDESTRIAN LIGHT LOCATIONS.

BRIDGE NO. XXXXXX

REVISIONS					
DATE	BY	DESCRIPTION	DATE	BY	DESCRIPTION

STRUCTURES DESIGN OFFICE
CENTRAL OFFICE
605 Suwannee Street, MS 33
Tallahassee, Florida 32399-0450

DRAWN BY: XXX MM-YY
CHECKED BY: XXX MM-YY
DESIGNED BY: XXX MM-YY
CHECKED BY: XXX MM-YY

STATE OF FLORIDA
DEPARTMENT OF TRANSPORTATION

ROAD NO.	COUNTY	FINANCIAL PROJECT ID

SHEET TITLE: PLAN AND ELEVATION EXAMPLE 3
MULTI-SHEET PLAN AND ELEVATION (SHEET 4 OF 5)

PROJECT NAME:

REF. DWG. NO.

SHEET NO.

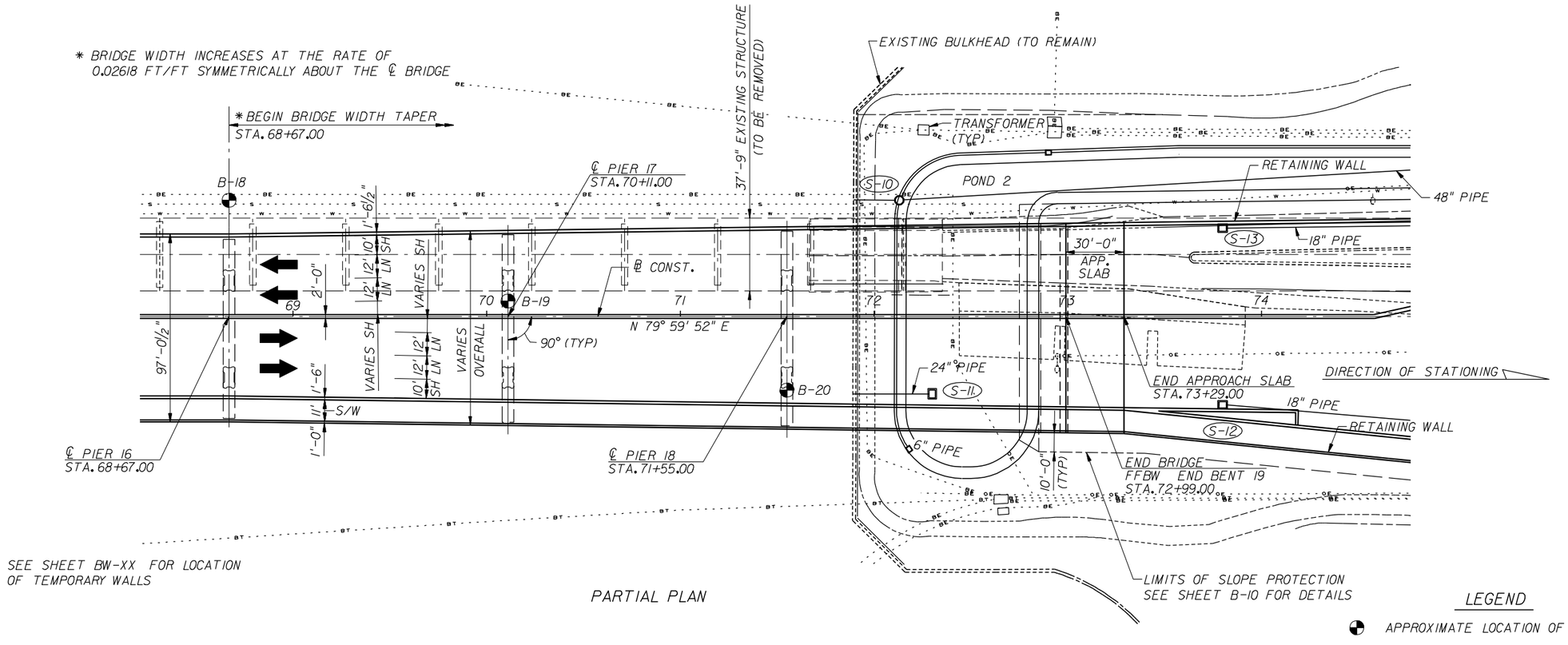
* BRIDGE WIDTH INCREASES AT THE RATE OF 0.02618 FT/FT SYMMETRICALLY ABOUT THE ℄ BRIDGE
* BEGIN BRIDGE WIDTH TAPER
STA. 68+67.00
37'-9" EXISTING STRUCTURE (TO BE REMOVED)
EXISTING BULKHEAD (TO REMAIN)
TRANSFORMER (TYP)
POND 2
RETAINING WALL
48" PIPE
18" PIPE
S-10
S-13
S-11
S-12
30'-0" APP. SLAB
℄ PIER 17
STA. 70+11.00
B-18
B-19
B-20
℄ CONST.
N 79° 59' 52" E
90° (TYP)
97'-0½"
2'-0"
1'-6½"
1'-6"
1'-0"
11'
S/W
VARIES SH
VARIES OVERALL
24" PIPE
6" PIPE
END APPROACH SLAB
STA. 73+29.00
DIRECTION OF STATIONING
END BRIDGE
FFBW END BENT 19
STA. 72+99.00
10'-0" (TYP)
℄ PIER 16
STA. 68+67.00
℄ PIER 18
STA. 71+55.00
SEE SHEET BW-XX FOR LOCATION OF TEMPORARY WALLS
LIMITS OF SLOPE PROTECTION
SEE SHEET B-10 FOR DETAILS
PARTIAL PLAN
LEGEND
APPROXIMATE LOCATION OF SOIL BORING
EJ = DECK EXPANSION JOINT
(S-X) = DRAINAGE STRUCTURE, SEE ROADWAY PLANS
2601'-9" (OVERALL BRIDGE LENGTH)
144'-0" SPAN 16
144'-0" SPAN 17
144'-0" SPAN 18
℄ PIER 16 & MATCH LINE
℄ PIER 17
℄ PIER 18
END BRIDGE FFBW END BENT 19
EJ
MHW EL. 1.16 NGVD29
MLW EL. -0.37 NGVD29
APPROXIMATE EXISTING GROUND
24" SQUARE PRECAST PRESTRESSED CONCRETE PILES (UNO) SEE INDEX 20624
RETAINING WALL
PARTIAL ELEVATION
NOTE:
SEE LIGHTING PLANS, FOR LIGHT POLE AND PEDESTRIAN LIGHT LOCATIONS.
BRIDGE NO. XXXXXX
REVISIONS
DATE BY DESCRIPTION DATE BY DESCRIPTION
STRUCTURES DESIGN OFFICE
CENTRAL OFFICE
605 Suwannee Street, MS 33
Tallahassee, Florida 32399-0450
DRAWN BY: XXX MM-YY
CHECKED BY: XXX MM-YY
DESIGNED BY: XXX MM-YY
CHECKED BY: XXX MM-YY
STATE OF FLORIDA
DEPARTMENT OF TRANSPORTATION
ROAD NO. COUNTY FINANCIAL PROJECT ID
SHEET TITLE:
PLAN AND ELEVATION EXAMPLE 3
MULTI-SHEET PLAN AND ELEVATION (SHEET 5 OF 5)
PROJECT NAME:
REF. DWG. NO.
SHEET NO.

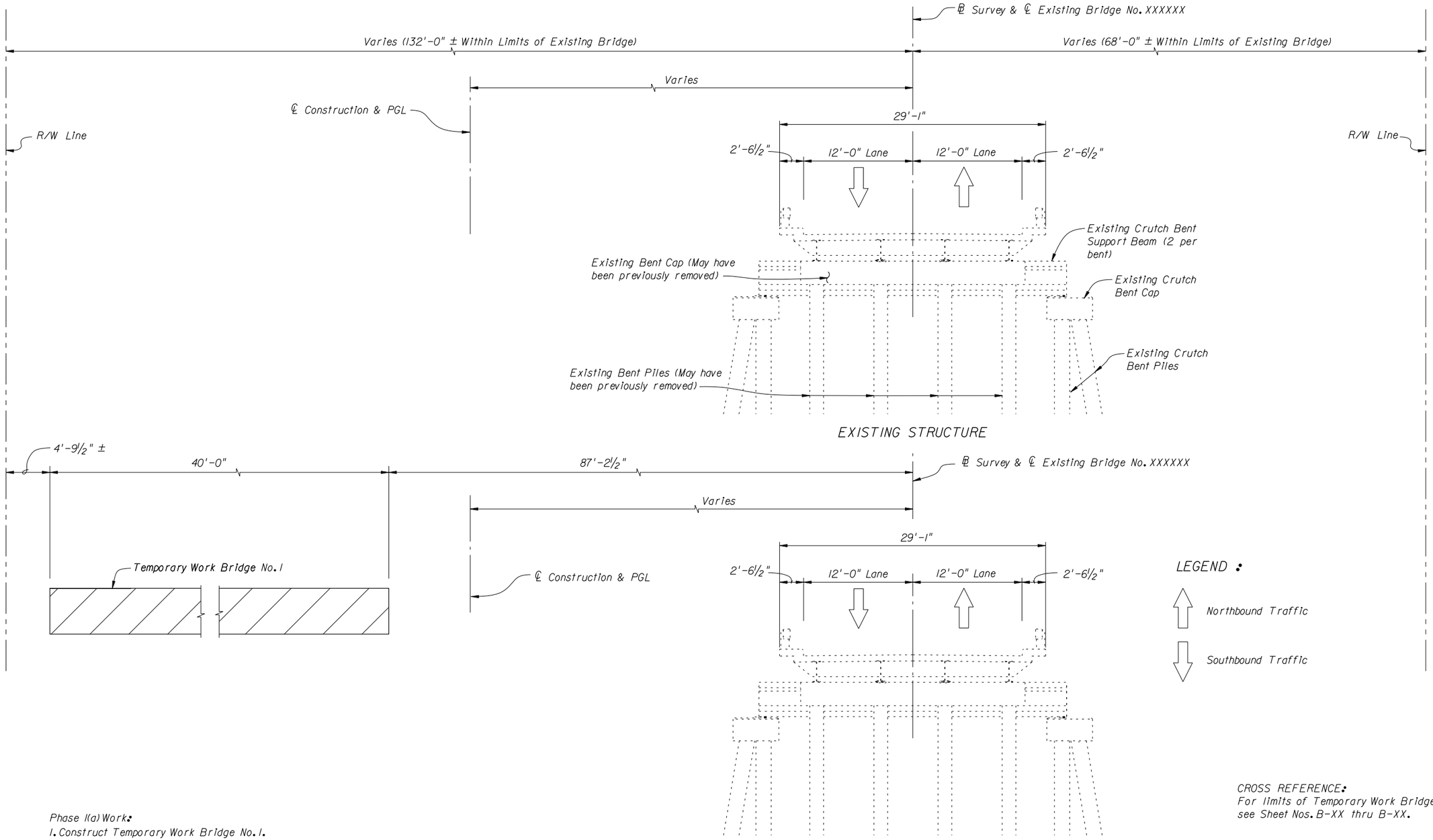

BRIDGE NO. XXXXXX

REVISIONS					
DATE	BY	DESCRIPTION	DATE	BY	DESCRIPTION

STRUCTURES DESIGN OFFICE
CENTRAL OFFICE
605 Suwannee Street, MS 33
Tallahassee, Florida 32399-0450

DRAWN BY: XXX MM-YY
CHECKED BY: XXX MM-YY
DESIGNED BY: XXX MM-YY
CHECKED BY: XXX MM-YY

STATE OF FLORIDA
DEPARTMENT OF TRANSPORTATION

ROAD NO.	COUNTY	FINANCIAL PROJECT ID

SHEET TITLE: CONSTRUCTION SEQUENCE EXAMPLE 1 UTILIZING TEMPORARY WORK BRIDGE (SHEET 1 OF 3)

PROJECT NAME:

REF. DWG. NO.

SHEET NO.

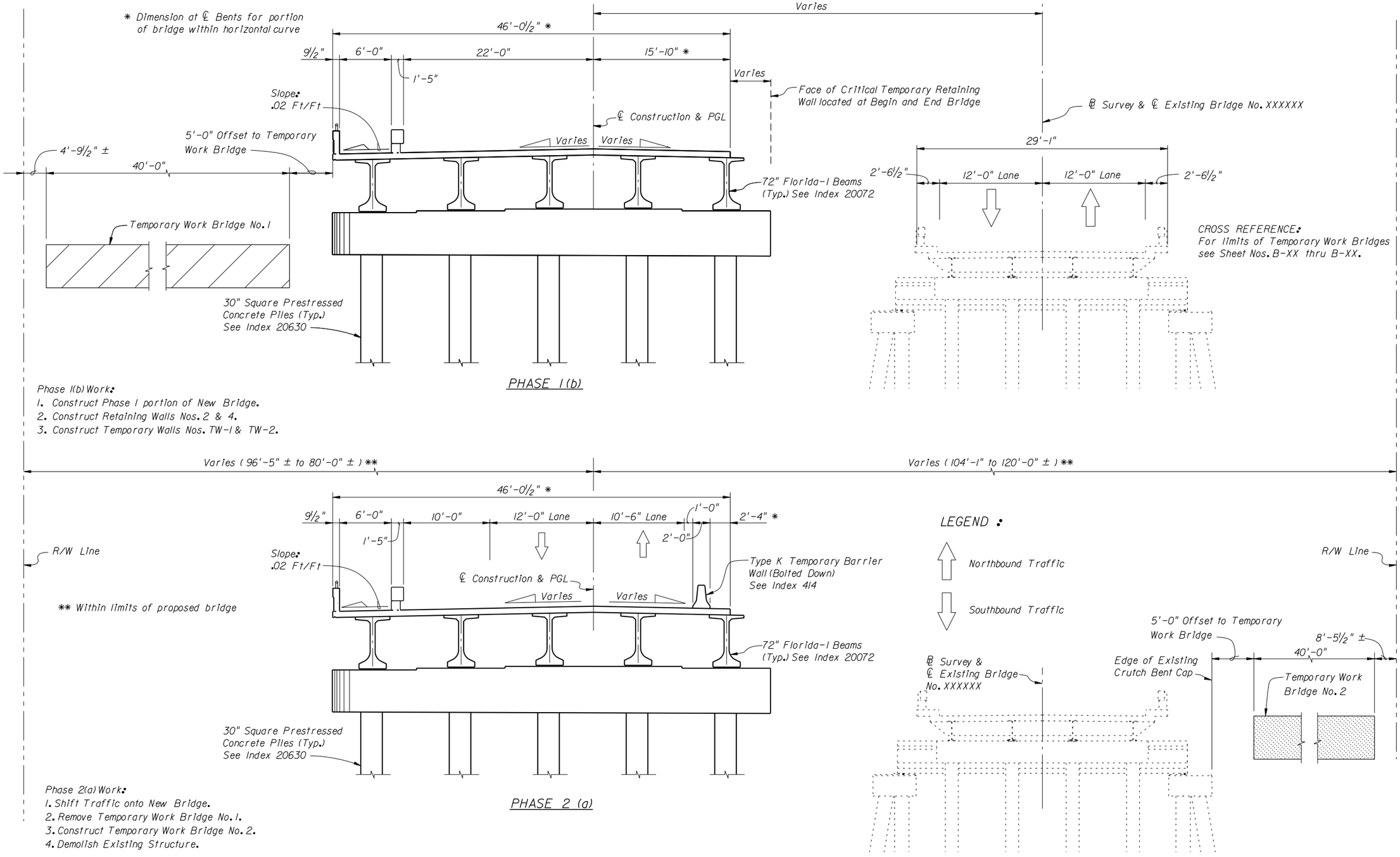

REVISIONS					
DATE	BY	DESCRIPTION	DATE	BY	DESCRIPTION

STRUCTURES DESIGN OFFICE
CENTRAL OFFICE
605 Suwannee Street, MS 33
Tallahassee, Florida 32399-0450

DRAWN BY: XXX MM-YY
CHECKED BY: XXX MM-YY
DESIGNED BY: XXX MM-YY
CHECKED BY: XXX MM-YY

STATE OF FLORIDA
DEPARTMENT OF TRANSPORTATION

ROAD NO.	COUNTY	FINANCIAL PROJECT ID

SHEET TITLE: CONSTRUCTION SEQUENCE EXAMPLE 1 UTILIZING TEMPORARY WORK BRIDGE (SHEET 2 OF 3)

PROJECT NAME:

REF. DWG. NO.

SHEET NO.

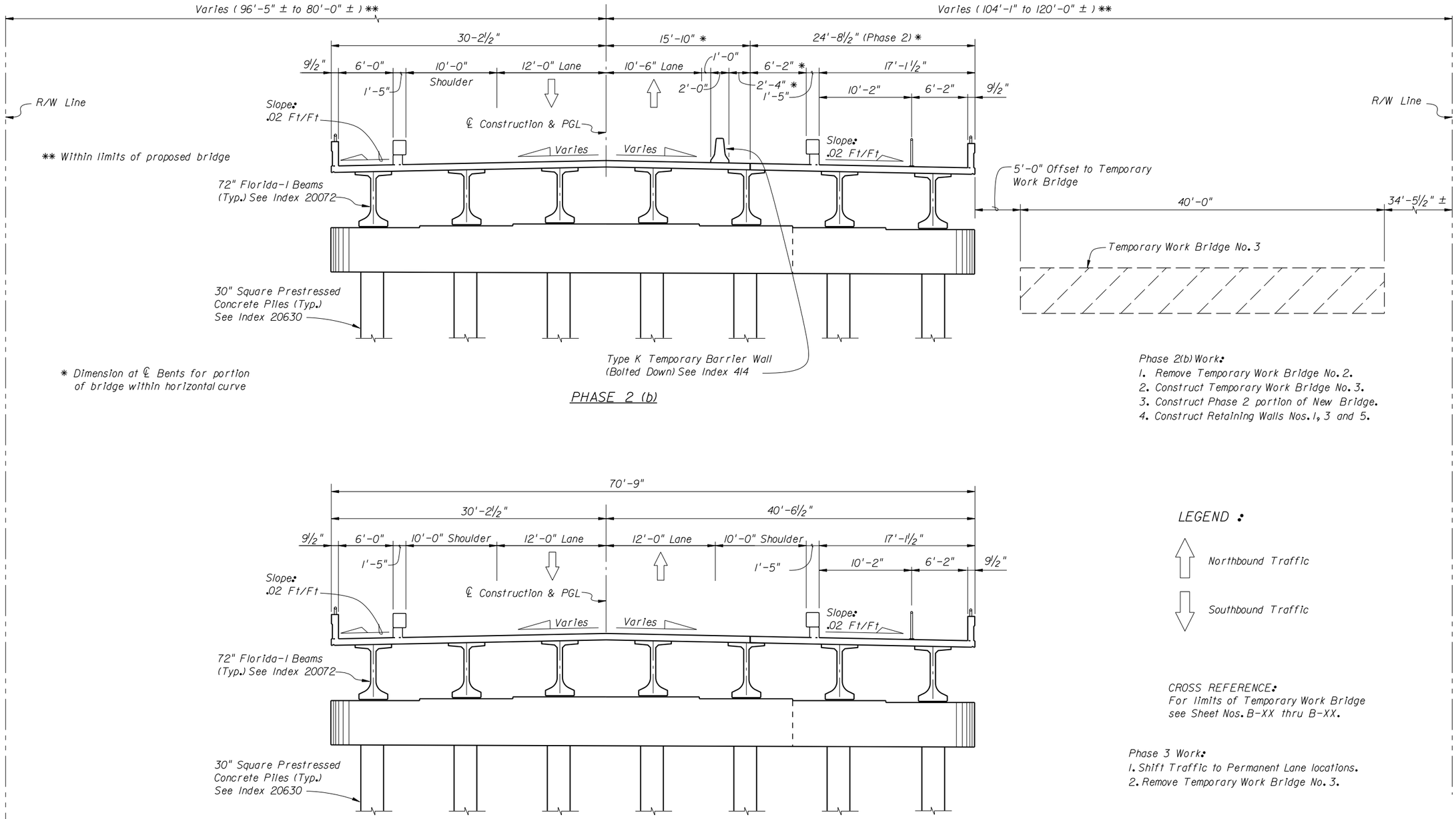

BRIDGE NO. XXXXXX

REVISIONS					
DATE	BY	DESCRIPTION	DATE	BY	DESCRIPTION

STRUCTURES DESIGN OFFICE
CENTRAL OFFICE
605 Suwannee Street, MS 33
Tallahassee, Florida 32399-0450

DRAWN BY: XXX MM-YY
CHECKED BY: XXX MM-YY
DESIGNED BY: XXX MM-YY
CHECKED BY: XXX MM-YY

STATE OF FLORIDA
DEPARTMENT OF TRANSPORTATION

ROAD NO.	COUNTY	FINANCIAL PROJECT ID

SHEET TITLE: CONSTRUCTION SEQUENCE EXAMPLE 1
UTILIZING TEMPORARY WORK BRIDGE (SHEET 3 OF 3)

PROJECT NAME:

REF. DWG. NO.

SHEET NO.

NOTE:
ERECT APPROPRIATE DEMOLITION SHIELDS TO PREVENT DEBRIS FROM FALLING ONTO THE ROAD BELOW. INCLUDE THE COST OF THE DEBRIS SHIELDS IN THE REMOVAL OF EXISITNG BRIDGE PAY ITEM NO. 110-3.

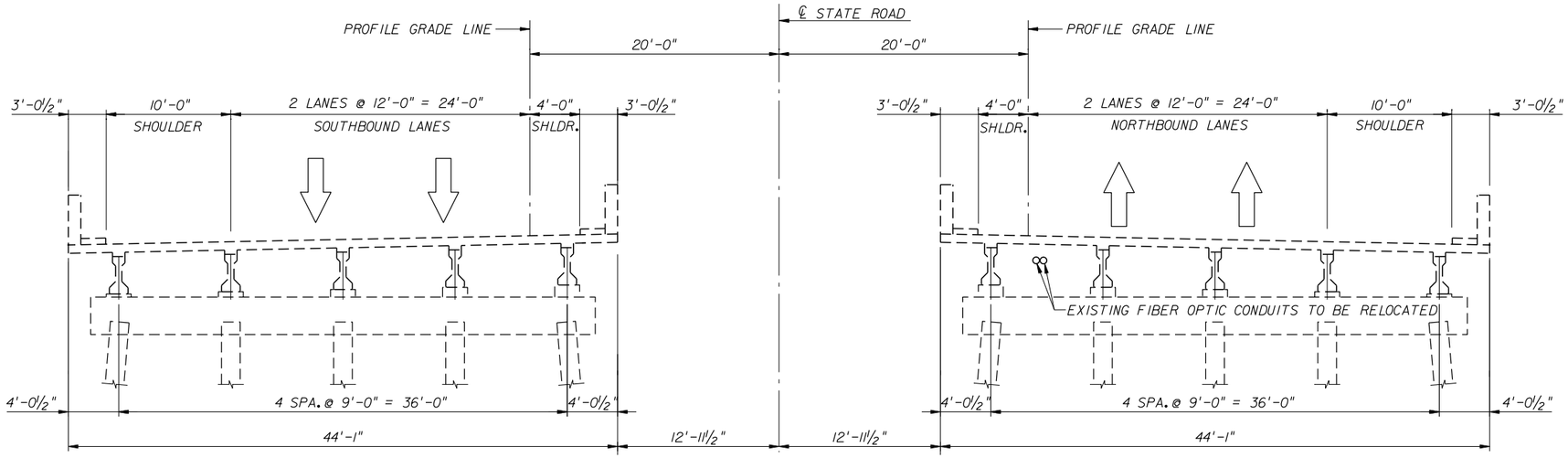

EXISTING

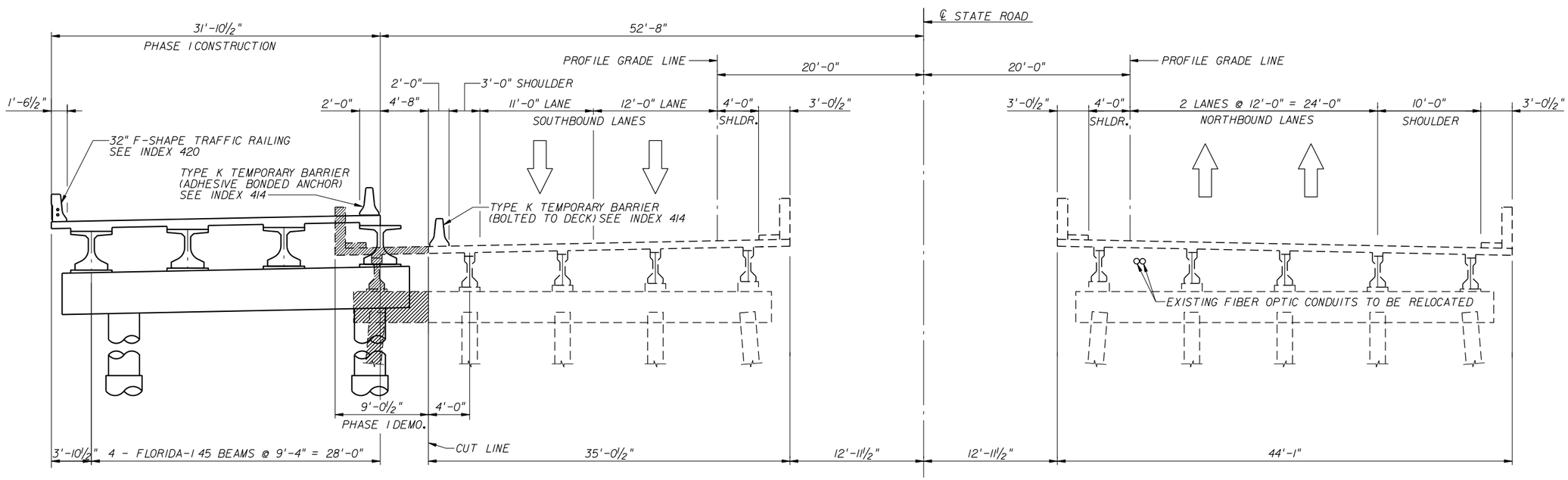

PHASE 1

LEGEND:
DENOTES TO BE REMOVED

BRIDGE NO. XXXXXX

REVISIONS					
DATE	BY	DESCRIPTION	DATE	BY	DESCRIPTION

STRUCTURES DESIGN OFFICE
CENTRAL OFFICE
605 Suwannee Street, MS 33
Tallahassee, Florida 32399-0450

DRAWN BY: XXX MM-YY
CHECKED BY: XXX MM-YY
DESIGNED BY: XXX MM-YY
CHECKED BY: XXX MM-YY

STATE OF FLORIDA
DEPARTMENT OF TRANSPORTATION

ROAD NO.	COUNTY	FINANCIAL PROJECT ID

SHEET TITLE: CONSTRUCTION SEQUENCE EXAMPLE 2 - PRESTRESSED CONCRETE BEAM SUPERSTRUCTURE (SHEET 1 OF 3)

PROJECT NAME:

REF. DWG. NO.

SHEET NO.

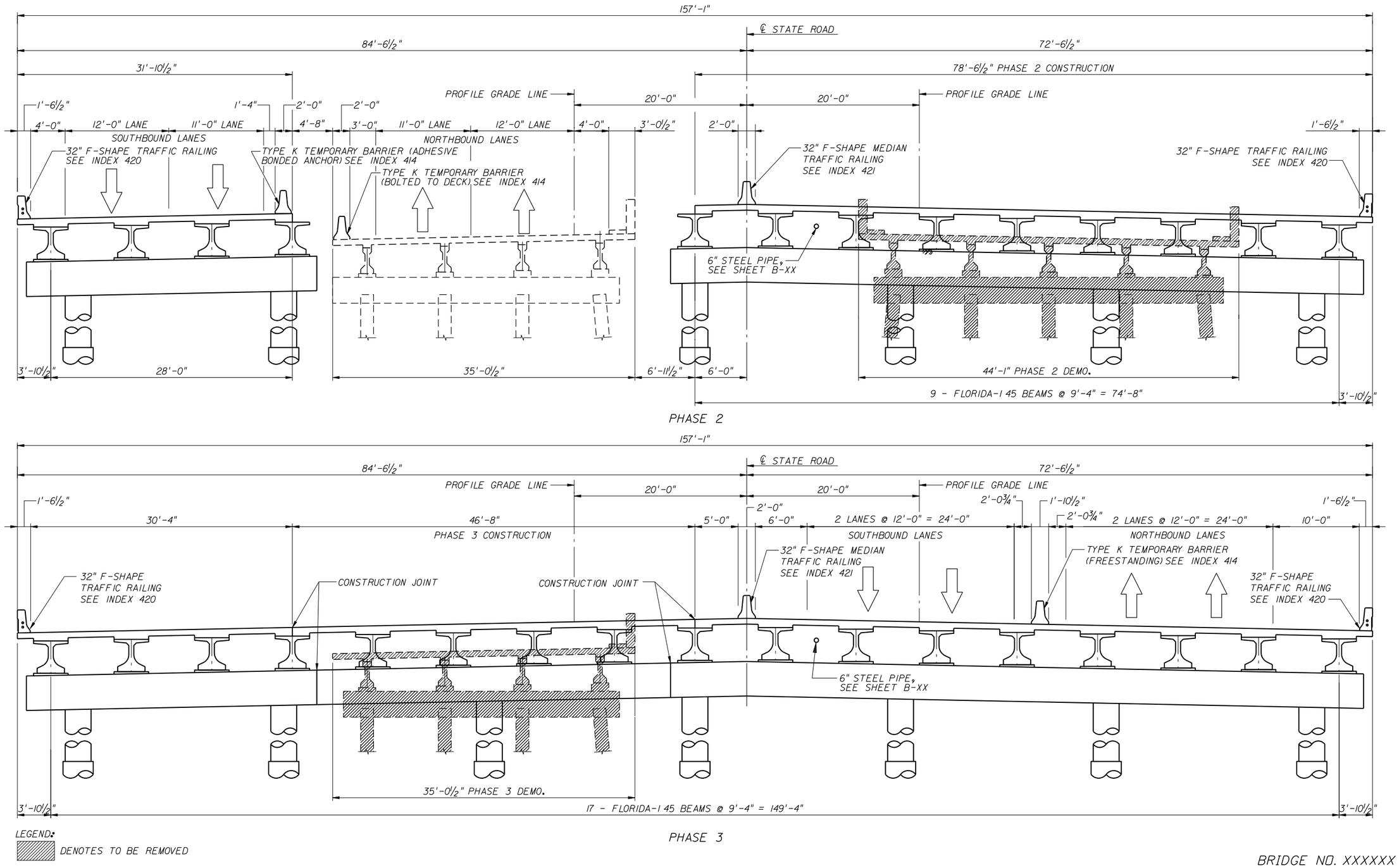

LEGEND:
DENOTES TO BE REMOVED

BRIDGE NO. XXXXXX

REVISIONS					
DATE	BY	DESCRIPTION	DATE	BY	DESCRIPTION

STRUCTURES DESIGN OFFICE
CENTRAL OFFICE
605 Suwannee Street, MS 33
Tallahassee, Florida 32399-0450

DRAWN BY: XXX MM-YY
CHECKED BY: XXX MM-YY
DESIGNED BY: XXX MM-YY
CHECKED BY: XXX MM-YY

STATE OF FLORIDA
DEPARTMENT OF TRANSPORTATION

ROAD NO.	COUNTY	FINANCIAL PROJECT ID

SHEET TITLE: CONSTRUCTION SEQUENCE EXAMPLE 2 - PRESTRESSED CONCRETE BEAM SUPERSTRUCTURE (SHEET 2 OF 3)

PROJECT NAME:

REF. DWG. NO.

SHEET NO.

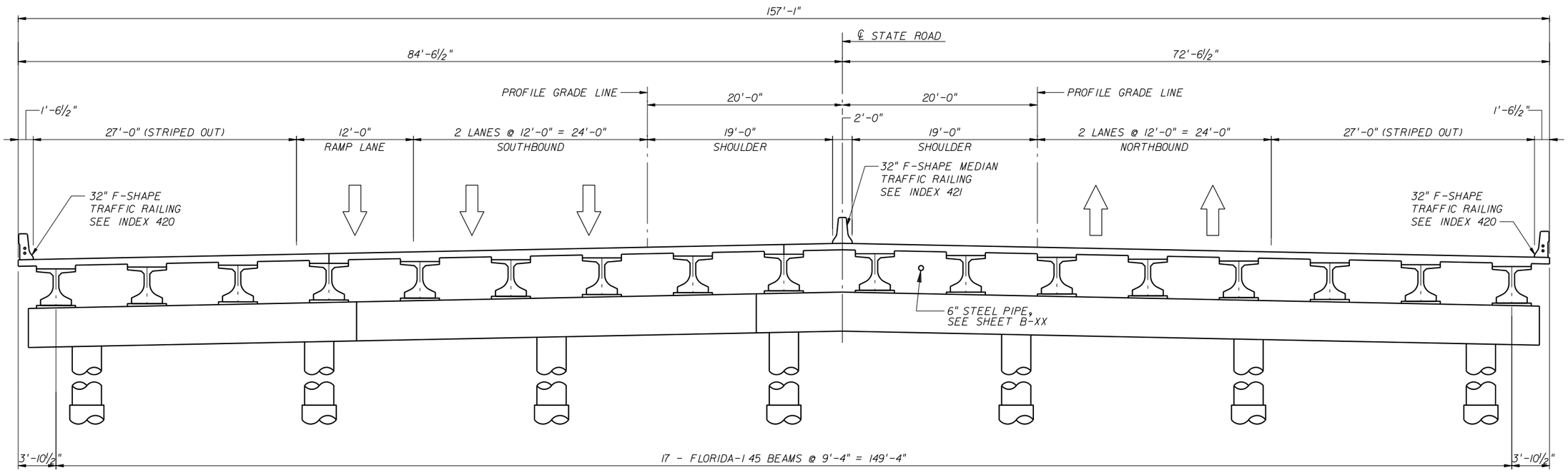

COMPLETED STRUCTURE

BRIDGE NO. XXXXXX

REVISIONS					
DATE	BY	DESCRIPTION	DATE	BY	DESCRIPTION

STRUCTURES DESIGN OFFICE
CENTRAL OFFICE
605 Suwannee Street, MS 33
Tallahassee, Florida 32399-0450

DRAWN BY: XXX MM-YY
CHECKED BY: XXX MM-YY
DESIGNED BY: XXX MM-YY
CHECKED BY: XXX MM-YY

STATE OF FLORIDA
DEPARTMENT OF TRANSPORTATION

ROAD NO.	COUNTY	FINANCIAL PROJECT ID

SHEET TITLE: CONSTRUCTION SEQUENCE EXAMPLE 2 - PRESTRESSED CONCRETE BEAM SUPERSTRUCTURE (SHEET 3 OF 3)

PROJECT NAME:

REF. DWG. NO.

SHEET NO.

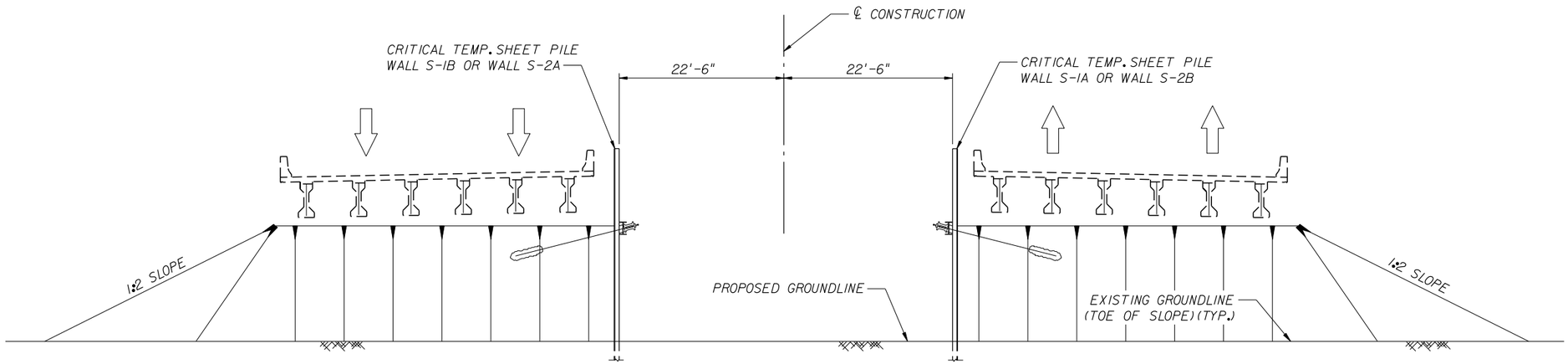

ELEVATION
DURING PHASE I CONSTRUCTION

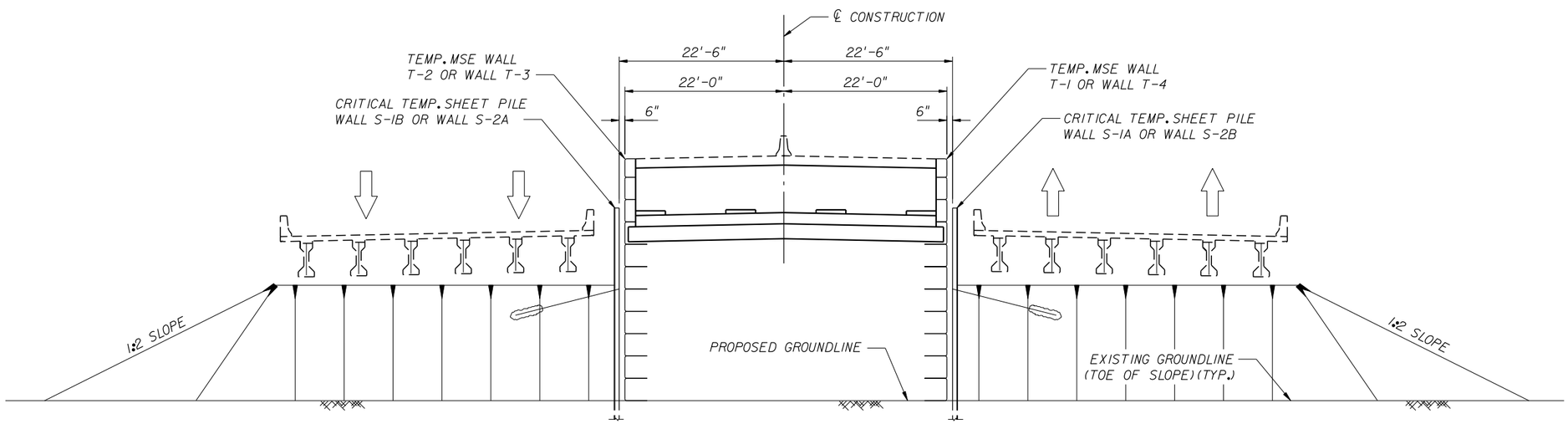

ELEVATION
END OF PHASE I CONSTRUCTION

PHASE I SEQUENCE OF CONSTRUCTION (BEGIN OF BRIDGE):

1. CONSTRUCT CRITICAL TEMPORARY SHEET PILE WALL S-1A AND WALL S-1B.
2. EXCAVATE TO PROPOSED GROUNDLINE ELEVATION.
3. CONSTRUCT TEMP. MSE WALL T-1, WALL T-2 AND PHASE I PORTIONS OF PERMANENT WALL 1-B AND END BENT NO. 1.

PHASE I SEQUENCE OF CONSTRUCTION (END OF BRIDGE):

1. CONSTRUCT TEMPORARY SHEET PILE WALL S-2A AND WALL S-2B.
2. EXCAVATE TO PROPOSED GROUNDLINE ELEVATION.
3. CONSTRUCT TEMP. MSE WALL T-3, WALL T-4 AND PHASE I PORTIONS OF PERMANENT WALL 2-B AND END BENT NO. 2.

BRIDGE NO. XXXXXX

REVISIONS					
DATE	BY	DESCRIPTION	DATE	BY	DESCRIPTION

STRUCTURES DESIGN OFFICE
CENTRAL OFFICE
605 Suwannee Street, MS 33
Tallahassee, Florida 32399-0450

DRAWN BY: XXX MM-YY
CHECKED BY: XXX MM-YY
DESIGNED BY: XXX MM-YY
CHECKED BY: XXX MM-YY

STATE OF FLORIDA
DEPARTMENT OF TRANSPORTATION

ROAD NO.	COUNTY	FINANCIAL PROJECT ID

SHEET TITLE: CONSTRUCTION SEQUENCE EXAMPLE 3
CRITICAL TEMPORARY SHEET PILE WALL (SHEET 1 OF 2)

PROJECT NAME:

REF. DWG. NO.

SHEET NO.

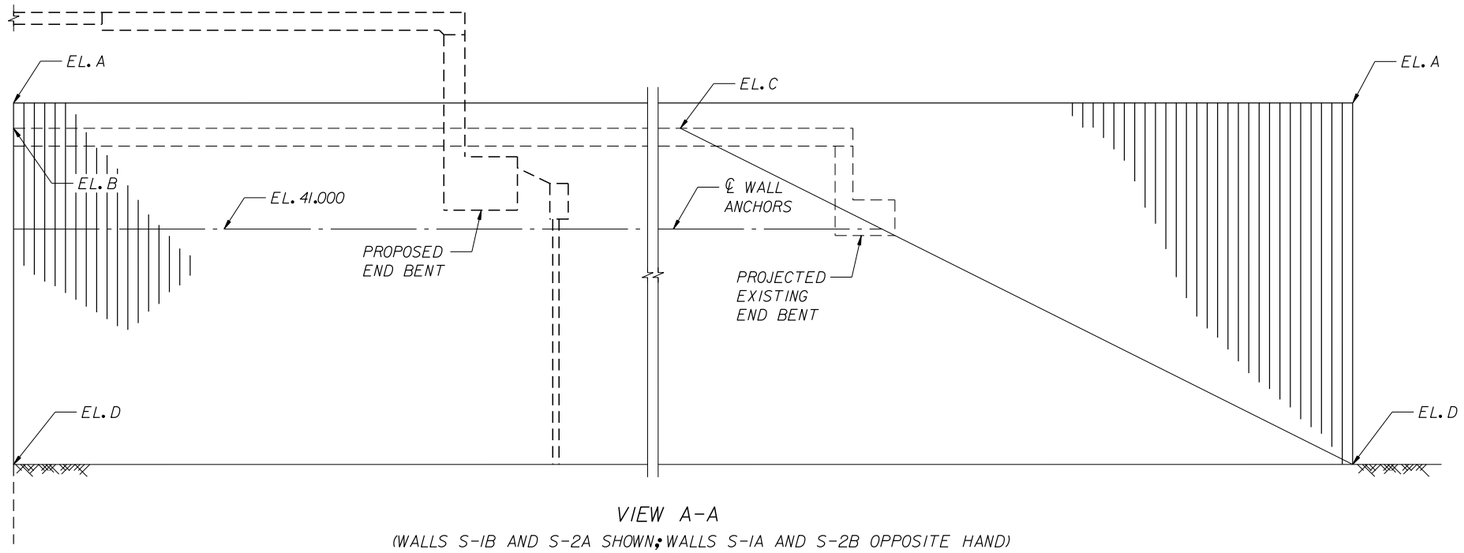

VIEW A-A

(WALLS S-1B AND S-2A SHOWN; WALLS S-1A AND S-2B OPPOSITE HAND)
(TEMPORARY MSE WALL NOT SHOWN)

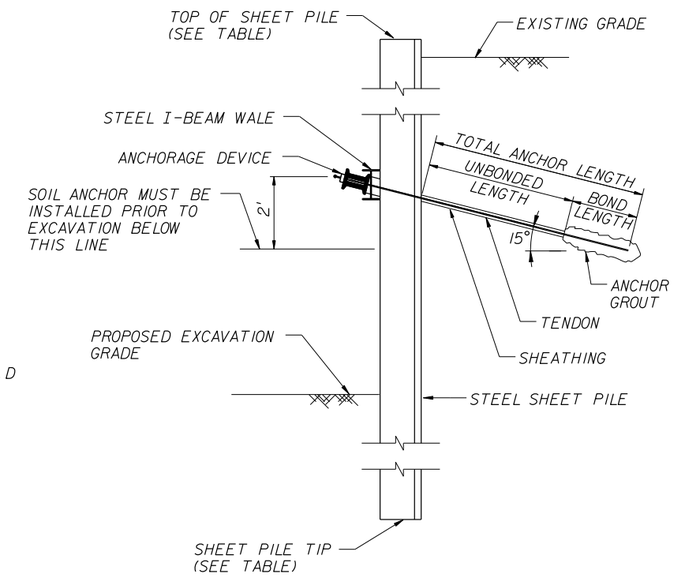

STEEL SHEET PILES

TEMPORARY SHEET PILE WALL SECTION AT SOIL ANCHOR

SHEET PILE WALL ELEVATION TABLE				
WALL NAME	EL. A	EL. B	EL. C	EL. D
WALL S-1A	47.000	44.886	45.789	26.620
WALL S-1B	47.000	45.037	45.789	26.286
WALL S-2A	47.000	44.919	45.794	26.588
WALL S-2B	47.000	45.180	45.842	26.598

(SEE CHART BELOW FOR TIP ELEVATION)

TEMPORARY ANCHORED SHEET PILE WALL DATA TABLE - PHASE I
(Construction Information)

Wall Location			Anchor Type	Anchor Elev. at Waler	Max. Allowable Anchor Spacing (ft)	Req. Horizontal Anchor ① Capacity (KLF)	Minimum Wall Tip ② Elev. (ft)	Min. Horiz. Soil Anchor Length Unbonded(ft) ①	Min. Section Modulus (in^3/ft)		Max. Bending Moment (ft-lb/ft)	Min. Required Moment of ④ Inertia (in^4/ft)	Max. Scaled Deflection ($lb-in^2$) ⑤
Wall Name	Approx. Sta. (Begin - End)	Offset (ft)							A-328 ③	A-572 ③			
WALL S-1A	275+64 to 277+04	22.50' Lt.	Soil Anchor	41	10	4.5	17.6	19.2	10.2	8.0	21207	9.6	1.7×10^9
WALL S-1B	275+52 to 276+92	22.50' Rt.	Soil Anchor	41	10	4.7	17.1	19.9	11.0	8.6	22981	11.2	2.0×10^9
WALL S-2A	277+73 to 279+11	22.50' Lt.	Soil Anchor	41	10	4.5	17.6	19.2	10.2	8.0	21207	9.6	1.7×10^9
WALL S-2B	277+61 to 278+99	22.50' Rt.	Soil Anchor	41	10	4.5	17.6	19.2	10.2	8.0	21207	9.6	1.7×10^9

① DIVIDE REQUIRED HORIZONTAL ANCHOR CAPACITY BY THE COSINE OF THE ANCHOR ANGLE FROM HORIZONTAL TO OBTAIN REQUIRED AXIAL CAPACITY. DIVIDE MINIMUM HORIZONTAL SOIL ANCHOR UNBONDED LENGTH BY THE COSINE OF THE ANCHOR ANGLE FROM THE HORIZONTAL TO OBTAIN MINIMUM AXIAL UNBONDED LENGTH.

② IN ACCORDANCE WITH SECTION 455-5.8.

③ ALLOWABLE DESIGN STRESS. BASED ON 65% OF THE YIELD STRESS (Fy).

④ BASED ON MAXIMUM SHEET PILE DEFLECTION OF 3 INCHES.

⑤ DIVIDE MAXIMUM SCALED DEFLECTION PER FOOT OF WALL BY MODULUS OF ELASTICITY (lb/in^2) TO OBTAIN DEFLECTION IN INCHES. SHEET PILE WALL DEFLECTIONS SHALL BE LIMITED TO 3 INCHES OR LESS. WALL DEFLECTIONS WILL CAUSE DISTRESS OF ADJACENT PAVEMENT DURING CONSTRUCTION. THE CONTRACTOR SHALL MAINTAIN PAVEMENT CONDITIONS BEHIND THE SHEET PILE WALLS DURING CONSTRUCTION. THE COST OF MAINTAINING ADJACENT PAVEMENT SHALL BE INCLUDED IN THE COST OF THE STEEL SHEET PILE WALL PAY ITEMS 455-133 AND 455-133-1.

1. OMIT GROUTED ANCHORS IN FRONT OF EXISTING END BENTS.
2. A TOTAL OF 44 SOIL ANCHORS ARE ASSUMED FOR THE PROJECT. THE CONTRACTOR MAY INCREASE OR DECREASE THE NUMBER OF SOIL ANCHORS, PROVIDED THAT MAXIMUM ANCHOR SPACING OF 10 FEET IS NOT EXCEEDED AND THE REQUIRED ANCHOR CAPACITY LISTED IN THE DATA TABLE IS ALSO SATISFIED. HOWEVER, ONLY 44 SOILS ANCHORS WILL BE INCLUDED FOR PAYMENT PURPOSES, AT THE UNIT BID PRICE FOR PRESTRESSED SOIL ANCHOR.

BRIDGE NO. XXXXXX

REVISIONS					
DATE	BY	DESCRIPTION	DATE	BY	DESCRIPTION

STRUCTURES DESIGN OFFICE
CENTRAL OFFICE
605 Suwannee Street, MS 33
Tallahassee, Florida 32399-0450

DRAWN BY: XXX MM-YY
CHECKED BY: XXX MM-YY
DESIGNED BY: XXX MM-YY
CHECKED BY: XXX MM-YY

STATE OF FLORIDA
DEPARTMENT OF TRANSPORTATION

ROAD NO.	COUNTY	FINANCIAL PROJECT ID

SHEET TITLE: CONSTRUCTION SEQUENCE EXAMPLE 3
CRITICAL TEMPORARY SHEET PILE WALL (SHEET 2 OF 2)

PROJECT NAME:

REF. DWG. NO.

SHEET NO.

LEGEND:

- INDICATES SOIL BORING APPROX. LOCATIONS (SEE SHEETS B-XX THRU B-XX FOR BORINGS)
- DENOTES 18" PILE LOCATION
- DENOTES 18" TEST PILE LOCATION
- DENOTES 18" TENSION PILE LOCATION

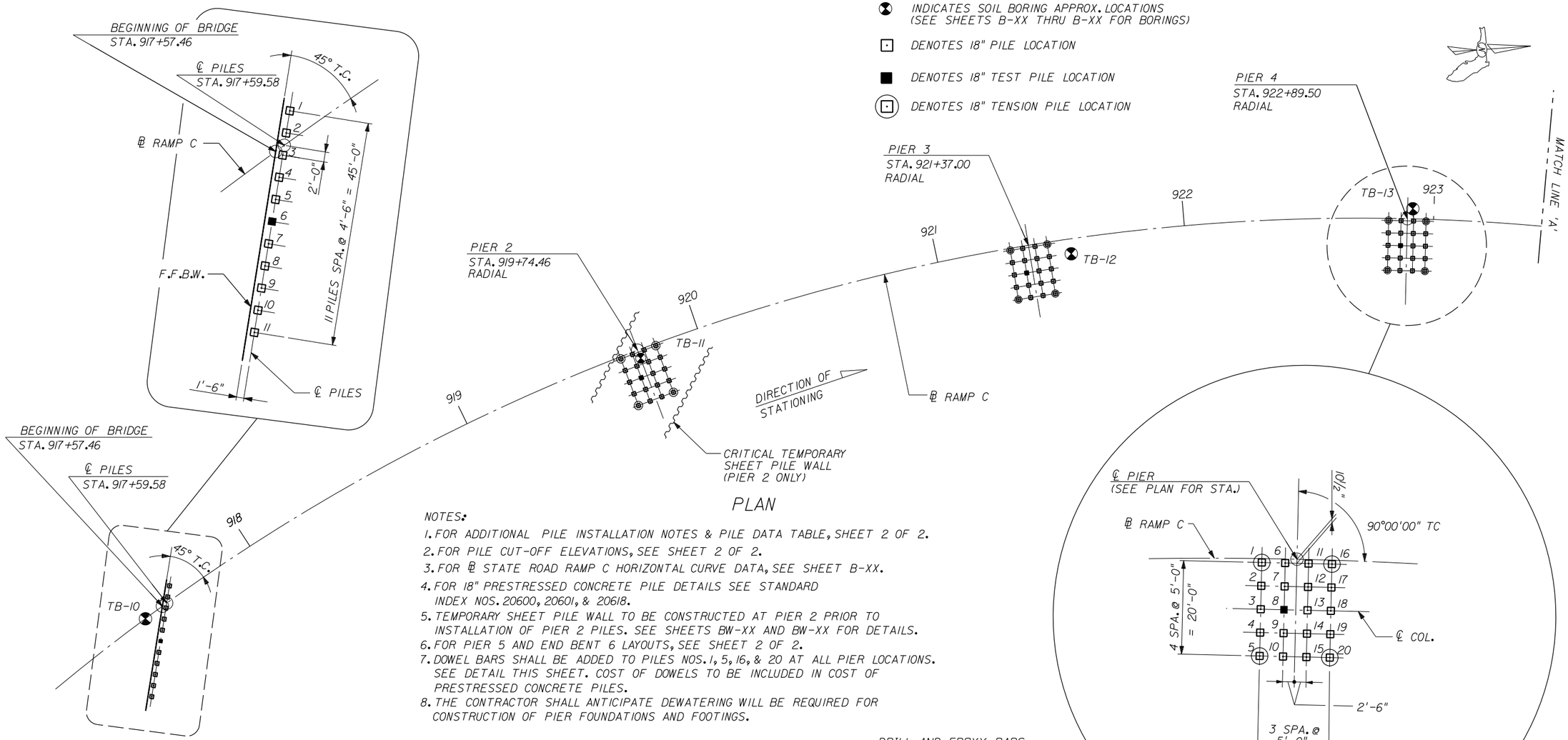

PLAN

TYPICAL PILE LAYOUT FOR PIER 2, 3 AND 4

NOTES:

1. FOR ADDITIONAL PILE INSTALLATION NOTES & PILE DATA TABLE, SHEET 2 OF 2.
2. FOR PILE CUT-OFF ELEVATIONS, SEE SHEET 2 OF 2.
3. FOR ℄ STATE ROAD RAMP C HORIZONTAL CURVE DATA, SEE SHEET B-XX.
4. FOR 18" PRESTRESSED CONCRETE PILE DETAILS SEE STANDARD INDEX NOS. 20600, 20601, & 20618.
5. TEMPORARY SHEET PILE WALL TO BE CONSTRUCTED AT PIER 2 PRIOR TO INSTALLATION OF PIER 2 PILES. SEE SHEETS BW-XX AND BW-XX FOR DETAILS.
6. FOR PIER 5 AND END BENT 6 LAYOUTS, SEE SHEET 2 OF 2.
7. DOWEL BARS SHALL BE ADDED TO PILES NOS. 1, 5, 16, & 20 AT ALL PIER LOCATIONS. SEE DETAIL THIS SHEET. COST OF DOWELS TO BE INCLUDED IN COST OF PRESTRESSED CONCRETE PILES.
8. THE CONTRACTOR SHALL ANTICIPATE DEWATERING WILL BE REQUIRED FOR CONSTRUCTION OF PIER FOUNDATIONS AND FOOTINGS.

NOTE 'A':

EXISTING AT&T FIBER OPTIC TO BE EXPOSED AND PROTECTED PRIOR TO PIER 2 FOOTING CONSTRUCTION, BY OTHERS.

CONTRACTOR SHALL COORDINATE WITH UTILITY OWNER'S CONTRACTOR PRIOR TO DRIVING SHEET PILE.

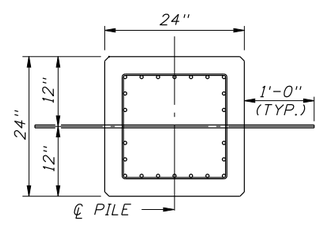

DOWEL DETAIL PLAN
SEE NOTE 7

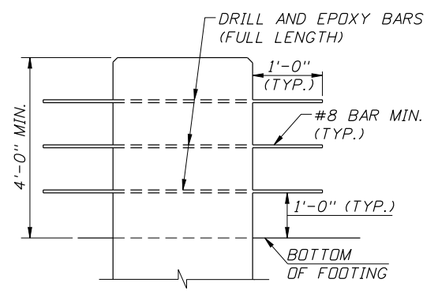

DOWEL DETAIL ELEVATION
SEE NOTE 7

BRIDGE NO. XXXXXX

REVISIONS					
DATE	BY	DESCRIPTION	DATE	BY	DESCRIPTION

STRUCTURES DESIGN OFFICE
CENTRAL OFFICE
605 Suwannee Street, MS 33
Tallahassee, Florida 32399-0450

DRAWN BY: XXX MM-YY
CHECKED BY: XXX MM-YY
DESIGNED BY: XXX MM-YY
CHECKED BY: XXX MM-YY

STATE OF FLORIDA
DEPARTMENT OF TRANSPORTATION

ROAD NO.	COUNTY	FINANCIAL PROJECT ID

SHEET TITLE: FOUNDATION LAYOUT EXAMPLE 1
PILE FOUNDATION (SHEET 1 OF 2)

PROJECT NAME:

REF. DWG. NO.

SHEET NO.

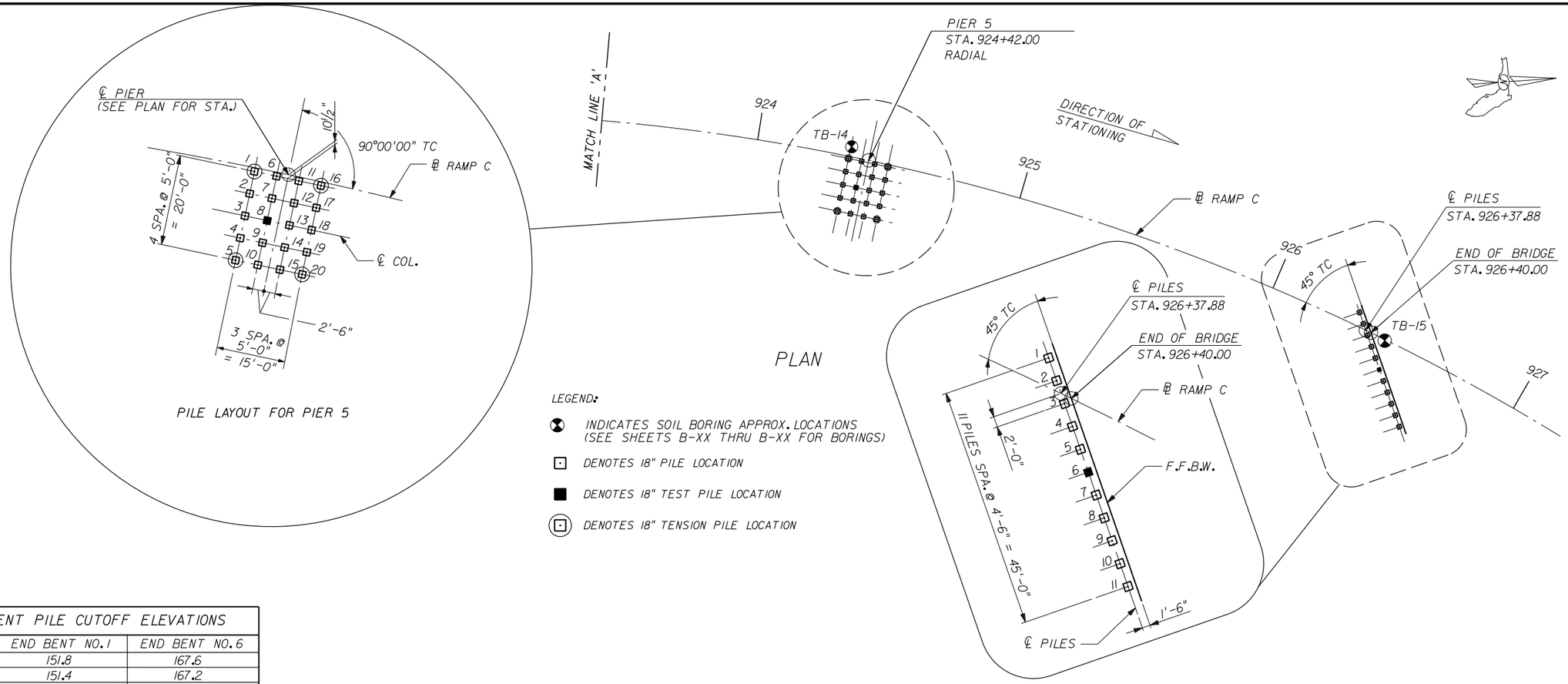

LEGEND:

- INDICATES SOIL BORING APPROX. LOCATIONS (SEE SHEETS B-XX THRU B-XX FOR BORINGS)
- DENOTES 18" PILE LOCATION
- DENOTES 18" TEST PILE LOCATION
- DENOTES 18" TENSION PILE LOCATION

END BENT PILE CUTOFF ELEVATIONS		
PILE NO.	END BENT NO. 1	END BENT NO. 6
1	151.8	167.6
2	151.4	167.2
3	151.0	166.9
4	150.6	166.5
5	150.2	166.2
6	149.8	165.8
7	149.4	165.5
8	149.0	165.2
9	148.6	164.8
10	148.2	164.5
11	147.8	164.1

PIER PILE CUTOFF ELEVATIONS				
PILE NO.	PIER NO. 2	PIER NO. 3	PIER NO. 4	PIER NO. 5
1 THRU. 20	125.0	120.0	120.0	140.0

PILE DATA TABLE														
INSTALLATION CRITERIA								DESIGN CRITERIA						
PIER OR BENT	PILE SIZE (IN)	NOMINAL BEARING RESISTANCE (TONS)	TENSION RESISTANCE (TONS)	MIN. TIP ELEV. (FT)	TEST PILE LENGTH (FT)	REQUIRED JET ELEVATION (FT)	REQUIRED PREFORMED ELEVATION (FT)	FACTORED DESIGN LOAD (TONS)	DOWN DRAG (TONS)	TOTAL SCOUR RESISTANCE (TONS)	NET SCOUR RESISTANCE (TONS)	100 YEAR SCOUR ELEVATION (TONS)	LONG TERM SCOUR ELEVATION (TONS)	ϕ
1	18	169	N/A	106	120	N/A	120	93	17	N/A	N/A	N/A	N/A	0.75
2	18	245	24*	97	115	N/A	112	159	N/A	N/A	N/A	N/A	N/A	0.75
3	18	245	24*	111	105	N/A	126	159	N/A	N/A	N/A	N/A	N/A	0.75
4	18	245	24*	112	100	N/A	127	159	N/A	N/A	N/A	N/A	N/A	0.75
5	18	245	24*	117	120	N/A	132	159	N/A	N/A	N/A	N/A	N/A	0.75
6	18	251	N/A	113	120	N/A	128	87	76	N/A	N/A	N/A	N/A	0.75

* DOWEL BARS SHALL BE ADDED TO PILES NOS. 1, 5, 16 & 20 AT ALL PIER LOCATIONS. SEE DETAILS SHEET 1 OF 2. COST OF DOWELS TO BE INCLUDED IN COST OF PRESTRESSED CONCRETE PILES.

NOTES:

1. ALL PILES ARE 18 IN SQ. PRESTRESSED CONCRETE PILES AND SHALL BE DRIVEN PLUMB. SEE INDEXES 20600 & 20601 & 20618 FOR PILE NOTES AND DETAILS.
2. TEST PILES SHALL BE DRIVEN IN THE POSITION OF PERMANENT PLUMB PILES AT THE LOCATIONS INDICATED OR AS DIRECTED BY THE ENGINEER.
3. TEST PILES SHALL NOT BE DRIVEN WITHOUT APPROVAL OF THE ENGINEER.
4. PILES WITHIN THE MSE WALL VOLUME SHALL BE INSTALLED PRIOR TO THE CONSTRUCTION OF THE WALLS.
5. MSE WALL STRAPS/MESH SHALL BE PLACED TO AVOID CONFLICT WITH END BENT PILES AND END BENT CAPS.
6. THE CONTRACTOR SHALL VERIFY LOCATIONS OF ALL EXISTING UTILITIES PRIOR TO DRIVING PILES. FOR ADDITIONAL UTILITY INFORMATION, SEE ROADWAY PLANS.
7. FOR END BENT 1 AND PIER 2 THRU PIER 4 PILE LAYOUTS SEE SHEET 1 OF 2.
8. MINIMUM TIP ELEVATION IS REQUIRED FOR LATERAL STABILITY.
9. DO NOT JET OR PREFORM THE PILE LOCATIONS WITHOUT PRIOR APPROVAL OF THE ENGINEER.
10. THE CONTRACTOR SHALL ANTICIPATE DEWATERING WILL BE REQUIRED FOR CONSTRUCTION OF PIER FOUNDATIONS AND FOOTINGS.

BRIDGE NO. XXXXXX

REVISIONS					
DATE	BY	DESCRIPTION	DATE	BY	DESCRIPTION

STRUCTURES DESIGN OFFICE
CENTRAL OFFICE
605 Suwannee Street, MS 33
Tallahassee, Florida 32399-0450

DRAWN BY: XXX MM-YY
CHECKED BY: XXX MM-YY
DESIGNED BY: XXX MM-YY
CHECKED BY: XXX MM-YY

STATE OF FLORIDA
DEPARTMENT OF TRANSPORTATION

ROAD NO.	COUNTY	FINANCIAL PROJECT ID

SHEET TITLE: FOUNDATION LAYOUT EXAMPLE 1
PILE FOUNDATION (SHEET 2 OF 2)

PROJECT NAME:

REF. DWG. NO.

SHEET NO.

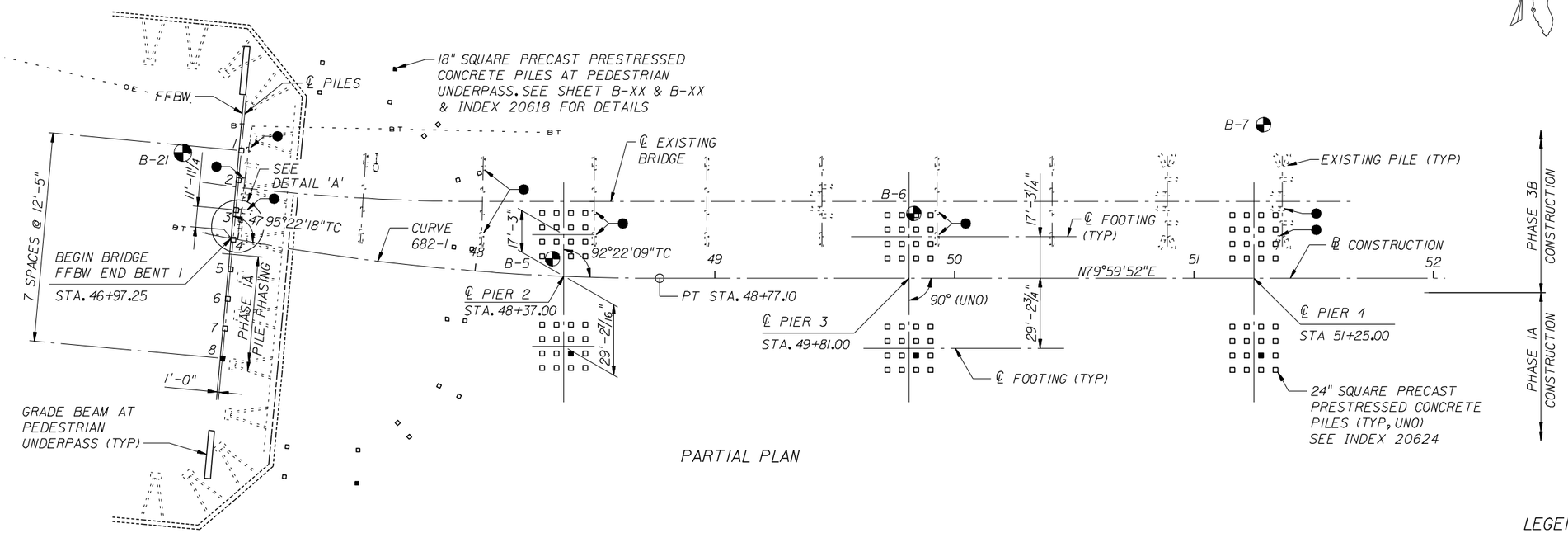

PARTIAL PLAN

PI STA = 45+50.21
△ = 40°22'30" LT
D = 5°54'24"
T = 356.65'
L = 683.54'
R = 970.00'
PC STA = 41+93.56
PT STA = 48+77.10
e = 0.08

CURVE DATA 682-1

NOTE:
EXISTING PILES NOT COMPLETELY REMOVED SHALL BE CUT OFF IN ACCORDANCE WITH SPECIFICATION 110.

SEE SHEET 5 OF 5 FOR PILE DATA TABLE AND INSTALLATION NOTES

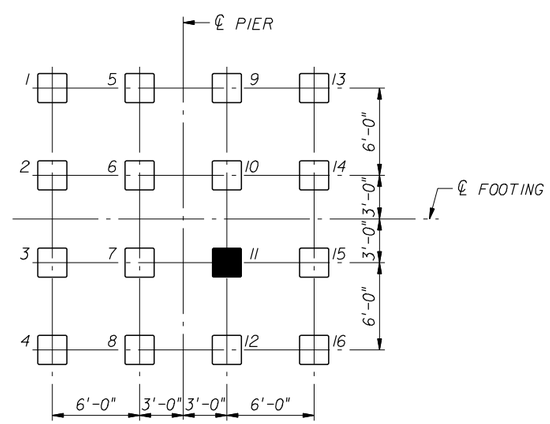

PLAN - PIERS 2 THRU 12 & 15 THRU 18

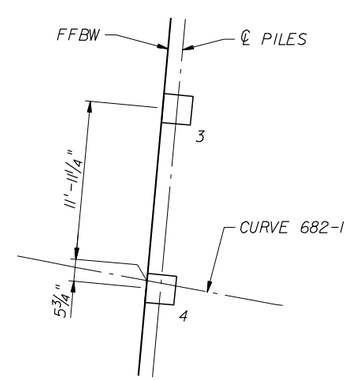

DETAIL 'A'

LEGEND

- ● EXISTING PILE TO BE COMPLETELY REMOVED
- ◐ APPOXIMATE LOCATION OF SOIL BORING
- □ DENOTES PLUMB PILE
- ■ DENOTES TEST PILE
- DENOTES EXISTING PLUMB PILE
- DENOTES EXISTING BATTERED PILE

BRIDGE NO. XXXXXX

REVISIONS					
DATE	BY	DESCRIPTION	DATE	BY	DESCRIPTION

STRUCTURES DESIGN OFFICE
CENTRAL OFFICE
605 Suwannee Street, MS 33
Tallahassee, Florida 32399-0450

DRAWN BY: XXX MM-YY
CHECKED BY: XXX MM-YY
DESIGNED BY: XXX MM-YY
CHECKED BY: XXX MM-YY

STATE OF FLORIDA
DEPARTMENT OF TRANSPORTATION

ROAD NO.	COUNTY	FINANCIAL PROJECT ID

SHEET TITLE: FOUNDATION LAYOUT EXAMPLE 2 SHOWING EXISTING PILE REMOVAL (SHEET 1 OF 5)

PROJECT NAME:

REF. DWG. NO.

SHEET NO.

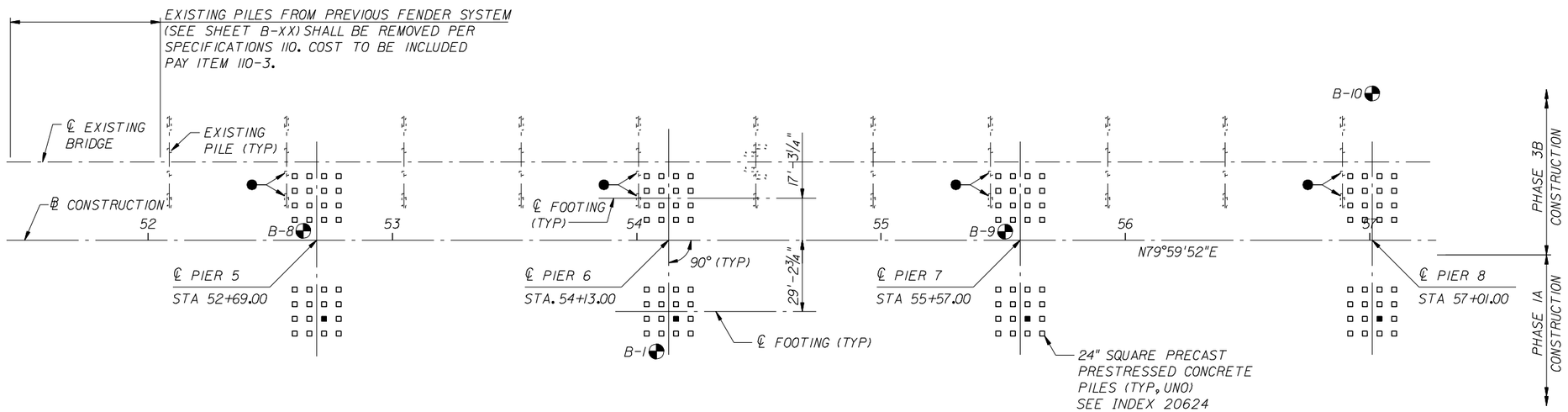

PARTIAL PLAN

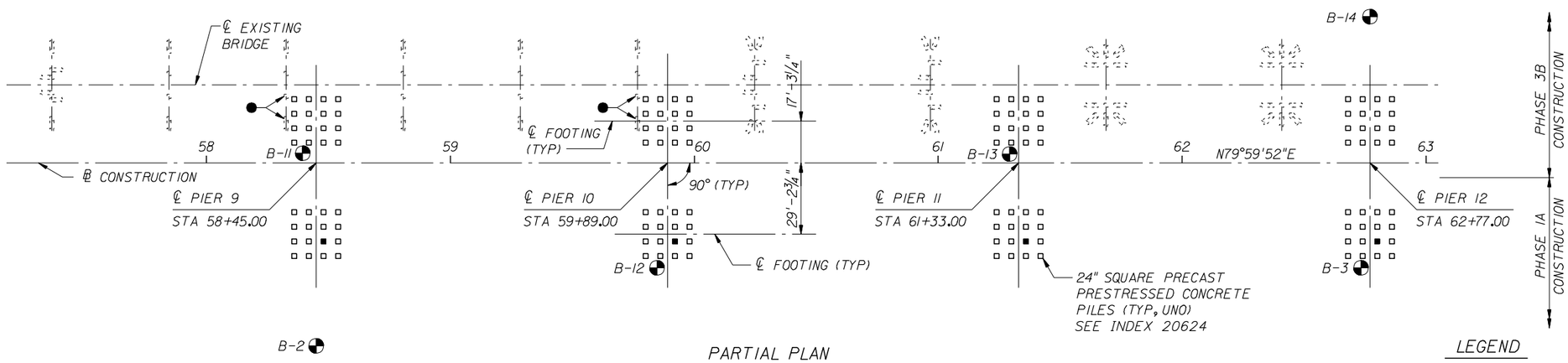

PARTIAL PLAN

LEGEND

- ● EXISTING PILE TO BE COMPLETELY REMOVED
- ◐ APPOXIMATE LOCATION OF SOIL BORING
- □ DENOTES PLUMB PILE
- ■ DENOTES TEST PILE
- DENOTES EXISTING PLUMB PILE
- DENOTES EXISTING BATTERED PILE

NOTE:
EXISTING PILES NOT COMPLETELY REMOVED SHALL BE CUT OFF IN ACCORDANCE WITH SPECIFICATION 110.

SEE SHEET 5 OF 5 FOR PILE DATA TABLE AND INSTALLATION NOTES

BRIDGE NO. XXXXXX

REVISIONS					
DATE	BY	DESCRIPTION	DATE	BY	DESCRIPTION

STRUCTURES DESIGN OFFICE
CENTRAL OFFICE
605 Suwannee Street, MS 33
Tallahassee, Florida 32399-0450

DRAWN BY: XXX MM-YY
CHECKED BY: XXX MM-YY
DESIGNED BY: XXX MM-YY
CHECKED BY: XXX MM-YY

STATE OF FLORIDA
DEPARTMENT OF TRANSPORTATION

ROAD NO.	COUNTY	FINANCIAL PROJECT ID

SHEET TITLE: FOUNDATION LAYOUT EXAMPLE 2 SHOWING EXISTING PILE REMOVAL (SHEET 2 OF 5)

PROJECT NAME:

REF. DWG. NO.

SHEET NO.

NOTE:
FENDER SYSTEM PILES NOT SHOWN.
SEE SHEET BX-XX FOR DETAILS.

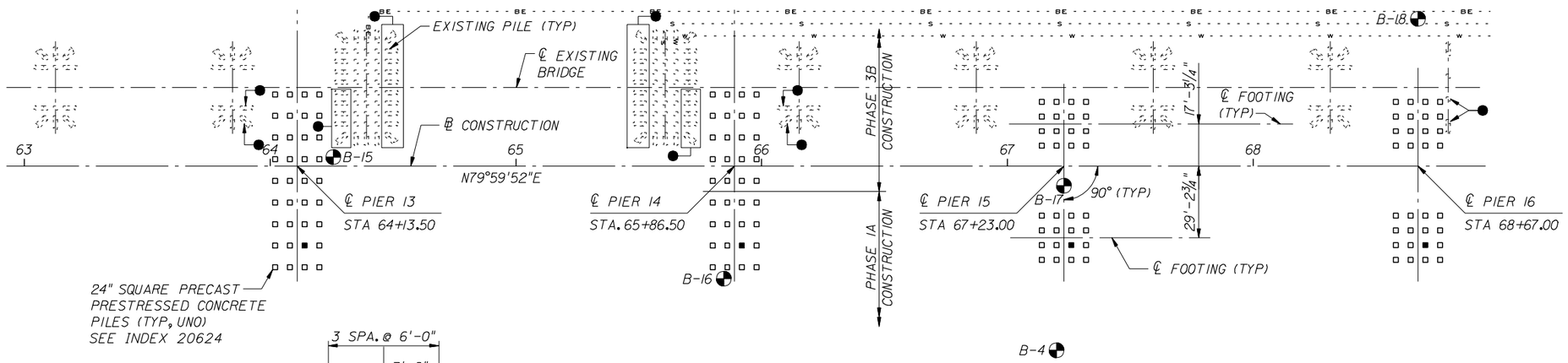

PARTIAL PLAN

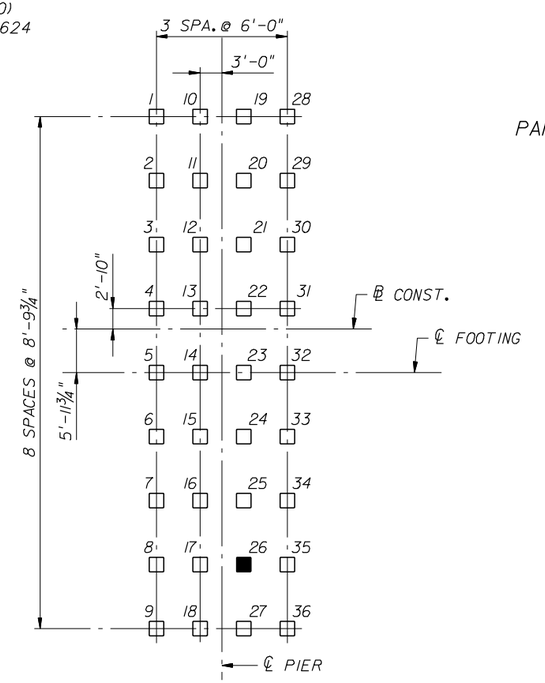

PLAN - PIERS 13 & 14

LEGEND

- ● EXISTING PILE TO BE COMPLETELY REMOVED
- ◐ APPOXIMATE LOCATION OF SOIL BORING
- □ DENOTES PLUMB PILE
- ■ DENOTES TEST PILE
- DENOTES EXISTING PLUMB PILE
- DENOTES EXISTING BATTERED PILE

NOTE:
EXISTING PILES NOT COMPLETELY REMOVED SHALL BE CUT OFF IN ACCORDANCE WITH SPECIFICATION 110.

SEE SHEET 5 OF 5 FOR PILE DATA TABLE AND INSTALLATION NOTES

BRIDGE NO. XXXXXX

REVISIONS					
DATE	BY	DESCRIPTION	DATE	BY	DESCRIPTION

STRUCTURES DESIGN OFFICE
CENTRAL OFFICE
605 Suwannee Street, MS 33
Tallahassee, Florida 32399-0450

DRAWN BY: XXX MM-YY
CHECKED BY: XXX MM-YY
DESIGNED BY: XXX MM-YY
CHECKED BY: XXX MM-YY

STATE OF FLORIDA
DEPARTMENT OF TRANSPORTATION

ROAD NO.	COUNTY	FINANCIAL PROJECT ID

SHEET TITLE: FOUNDATION LAYOUT EXAMPLE 2 SHOWING EXISTING PILE REMOVAL (SHEET 3 OF 5)

PROJECT NAME:

REF. DWG. NO.

SHEET NO.

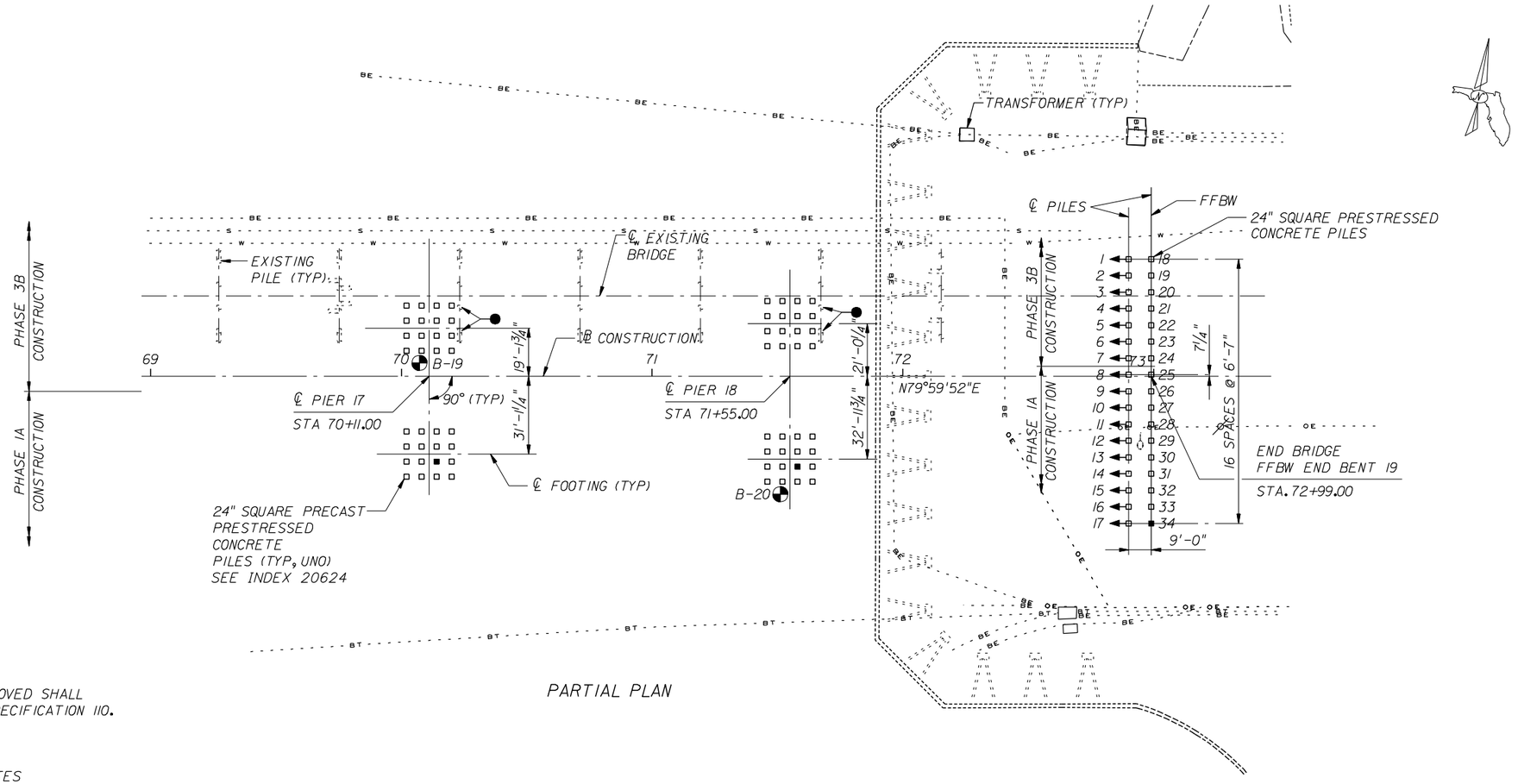

PARTIAL PLAN

NOTE:
EXISTING PILES NOT COMPLETELY REMOVED SHALL BE CUT OFF IN ACCORDANCE WITH SPECIFICATION 110.

SEE SHEET 5 OF 5 FOR PILE DATA TABLE AND INSTALLATION NOTES

LEGEND

- ● EXISTING PILE TO BE COMPLETELY REMOVED
- ◐ APPOXIMATE LOCATION OF SOIL BORING
- □ DENOTES PLUMB PILE
- ■ DENOTES TEST PILE
- DENOTES EXISTING PLUMB PILE
- DENOTES EXISTING BATTERED PILE
- ◄□ DENOTES BATTERED PILE 2:12

BRIDGE NO. XXXXXX

REVISIONS					
DATE	BY	DESCRIPTION	DATE	BY	DESCRIPTION

STRUCTURES DESIGN OFFICE
CENTRAL OFFICE
605 Suwannee Street, MS 33
Tallahassee, Florida 32399-0450

DRAWN BY: XXX MM-YY
CHECKED BY: XXX MM-YY
DESIGNED BY: XXX MM-YY
CHECKED BY: XXX MM-YY

STATE OF FLORIDA
DEPARTMENT OF TRANSPORTATION

ROAD NO.	COUNTY	FINANCIAL PROJECT ID

SHEET TITLE: FOUNDATION LAYOUT EXAMPLE 2 SHOWING EXISTING PILE REMOVAL (SHEET 4 OF 5)

PROJECT NAME:

REF. DWG. NO.

SHEET NO.

$$\frac{\text{FACTORED DESIGN LOAD + NET SCOUR RESISTANCE + DOWN DRAG}}{\phi} \leq \text{NOMINAL BEARING RESISTANCE}$$

TENSION RESISTANCE - THE ULTIMATE SIDE FRICTION CAPACITY THAT MUST BE OBTAINED BELOW THE 100 YEAR SCOUR ELEVATION TO RESIST PULLOUT OF THE PILE (SPECIFY ONLY WHEN DESIGN REQUIRES TENSION CAPACITY).

TOTAL SCOUR RESISTANCE - AN ESTIMATE OF THE ULTIMATE STATIC SIDE FRICTION RESISTANCE PROVIDED BY THE SCOURABLE SOIL.

NET SCOUR RESISTANCE - AN ESTIMATE OF THE ULTIMATE STATIC SIDE FRICTION RESISTANCE PROVIDED BY THE SOIL FROM THE REQUIRED PREFORMED OR JETTING ELEVATION TO THE SCOUR ELEVATION.

100-YEAR SCOUR ELEVATION - ESTIMATED ELEVATION OF SCOUR DUE TO THE 100 YEAR STORM EVENT.

LONG TERM SCOUR ELEVATION - ESTIMATED ELEVATION OF SCOUR USED IN DESIGN FOR EXTREME EVENT LOADING.

PILE INSTALLATION NOTES:

THE CONTRACTOR SHALL VERIFY LOCATIONS OF ALL UTILITIES AND NOTIFY ALL INVOLVED UTILITY COMAPNIES PRIOR TO EXCAVATION, PILE DRIVING OR CONSTRUCTION AND SHALL BE RESPONSIBLE FOR MAKING ITS OWN DETERMINATION TO AVOID DAMAGE. THE CONTRACTOR SHALL ASSURE THAT ACTIVE UTILITIES ARE PROPERLY MAINTAINED DURING CONSTRUCTION.

PILE SPACINGS ARE MEASURED HORIZONTALLY ALONG FRONT FACE BACK WALL AT BOTTOM OF THE END BENT CAP AND ALONG ℄ PIER AT BOTTOM OF PILE CAP.

MINIMUM TIP ELEVATION IS REQUIRED FOR LATERAL STABILITY OR TENSION CAPACITY AT ALL LOCATIONS AND SHALL MEET THE REQUIREMENTS OF SECTION 455 OF THE SPECIFICATIONS.

END BENT PILES SHALL BE INSTALLED PRIOR TO CONSTRUCTION OF THE WALLS. BEFORE PREFORMING OR DRIVING PILES AT END BENT 1, CONTRACTOR SHALL EXPOSE BULKHEAD WALL TIE-BACKS. CONTACT THE ENGINEER IF TIE-BACKS CONFLICT WITH PROPOSED PILE LOCATIONS.

WHEN A REQUIRED JETTING ELEVATION IS SHOWN, THE JET SHALL BE LOWERED TO THE ELEVATION AND CONTINUE TO OPERATE AT THIS ELEVATION UNTIL THE PILE DRIVING IS COMPLETED. IF JETTING OR PREFORMING ELEVATIONS DIFFER FROM THOSE SHOWN ON THE TABLE, THE ENGINEER SHALL BE RESPONSIBLE FOR DETERMINATION OF THE REQUIRED DRIVING RESISTANCE.

THE CONTRACTOR SHOULD NOT ANTICIPATE BEING ALLOWED TO JET PILES BELOW THE 100 YEAR SCOUR ELEVATION.

AT EACH BENT, PILE DRIVING IS TO COMMENCE AT THE CENTER OF THE BENT AND PROCEED OUTWARD.

PILE DATA TABLE

INSTALLATION CRITERIA								DESIGN CRITERIA							PILE CUT-OFF ELEVATIONS	
PIER OR BENT NUMBER	PILE SIZE (in.)	NOMINAL BEARING RESISTANCE (tons)	TENSION RESISTANCE (tons)	MINIMUM TIP ELEVATION (ft.)	TEST PILE LENGTH (ft.)	REQUIRED JET ELEVATION (ft.)	REQUIRED PREFORM ELEVATION (ft.)	FACTORED DESIGN LOAD (tons)	DOWN DRAG (tons)	TOTAL SCOUR RESISTANCE (tons)	NET SCOUR RESISTANCE (tons)	100-YEAR SCOUR ELEVATION (ft.)	LONG TERM SCOUR ELEVATION (ft.)	RESISTANCE FACTOR-Ø*	PILE NUMBERS	ELEVATION
END BENT 1	24	369	0	-40	80	N/A	-30	240	0	N/A	N/A	N/A	N/A		SEE SEPARATE TABLE	
PIER 2	24	388		-55	85	-17		240		17	12	-17.1	-1.5		1-16 L & R	-5.0
PIER 3	24	383		-60	85	-20		240		13	9	-20.0	-5.6		1-16 L & R	1.9
PIER 4	24	426		-55	120	-22		250		39	27	-22.2	-9.5		1-16 L & R	1.9
PIER 5	24	414		-55	85	-22		250		26	19	-22.8	-9.6		1-16 L & R	1.9
PIER 6	24	398		-56	120	-24		250		12	9	-24.7	-13.0		1-16 L & R	1.9
PIER 7	24	434		-55	115	-28		250		45	32	-28.4	-15.0		1-16 L & R	1.9
PIER 8	24	443		-75	115	-28		261		38	27	-28.0	-14.7		1-16 L & R	1.9
PIER 9	24	422		-75	115	-26		261		19	13	-26.9	-13.0		1-16 L & R	1.9
PIER 10	24	409	56	-75	120	-28	N/A	261	N/A	7	5	-28.0	-13.0	0.75	1-16 L & R	1.9
PIER 11	24	415		-75	115	-26		261		13	9	-26.6	-13.0		1-16 L & R	1.9
PIER 12	24	442		-70	120	-28		277		14	10	-28.0	-12.5		1-16 L & R	1.9
PIER 13	24	431		-70	130	-28		277		4	3	-28.5	-14.5		1-36	0.9
PIER 14	24	434		-70	125	-28		277		7	5	-28.7	-13.8		1-36	0.9
PIER 15	24	429		-70	130	-29		277		3	2	-29.0	-14.4		1-16 L & R	1.9
PIER 16	24	383		-55	90	-27		242		10	7	-27.1	-12.5		1-16 L & R	1.9
PIER 17	24	394		-55	115	-27		242		20	14	-27.2	-11.0		1-16 L & R	1.9
PIER 18	24	398		-55	75	-22		242		25	17	-22.4	-3.5		1-16 L & R	1.9
END BENT 19	24	409	0	-62	80	N/A	-52	266	0	N/A	N/A	N/A	N/A		1-34	1.0

* Ø IS BASED ON THE USE OF DYNAMIC LOAD TEST.

END BENT 1
PILE CUT-OFF ELEVATIONS

PILE NO.	ELEVATION
1	6.2
2	7.2
3	8.2
4	9.3
5	10.3
6	11.3
7	12.4
8	13.4

BRIDGE NO. XXXXXX

REVISIONS

DATE	BY	DESCRIPTION	DATE	BY	DESCRIPTION

STRUCTURES DESIGN OFFICE
CENTRAL OFFICE
605 Suwannee Street, MS 33
Tallahassee, Florida 32399-0450

DRAWN BY: XXX MM-YY
CHECKED BY: XXX MM-YY
DESIGNED BY: XXX MM-YY
CHECKED BY: XXX MM-YY

STATE OF FLORIDA
DEPARTMENT OF TRANSPORTATION

ROAD NO.	COUNTY	FINANCIAL PROJECT ID

SHEET TITLE: FOUNDATION LAYOUT EXAMPLE 2 SHOWING EXISTING PILE REMOVAL (SHEET 5 OF 5)

PROJECT NAME:

REF. DWG. NO.

SHEET NO.

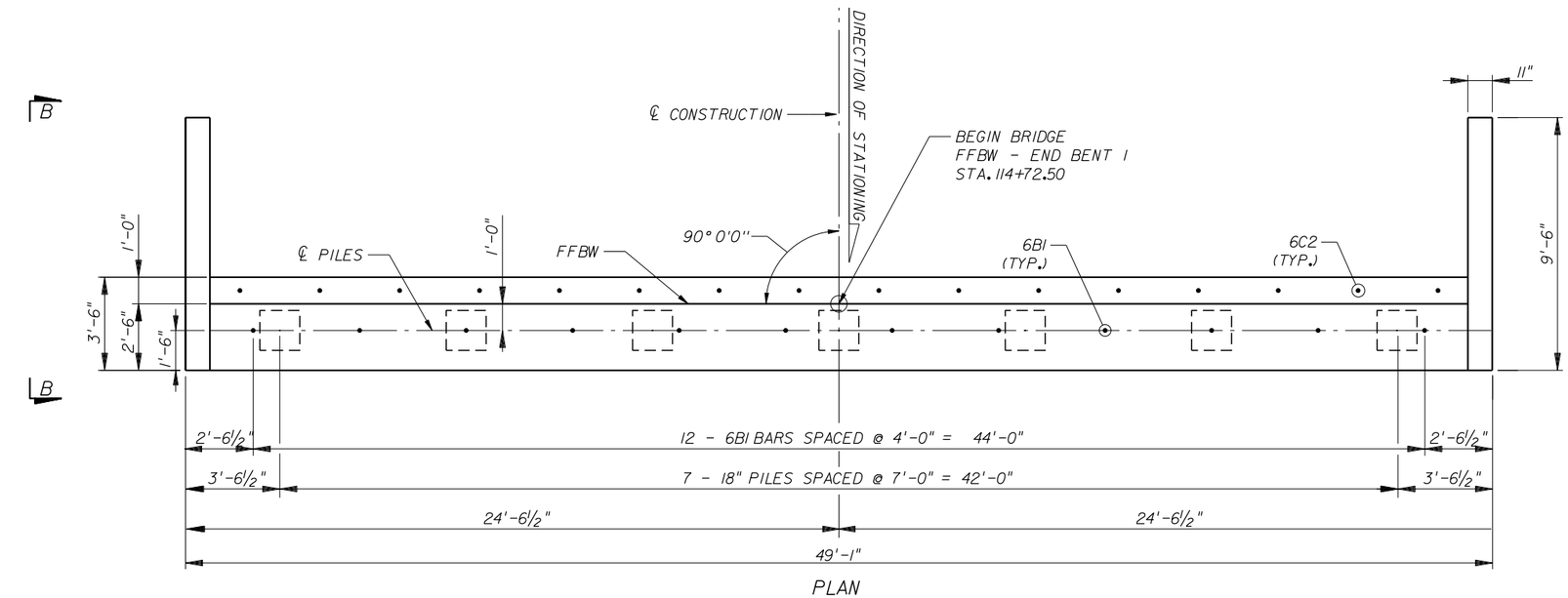

PLAN

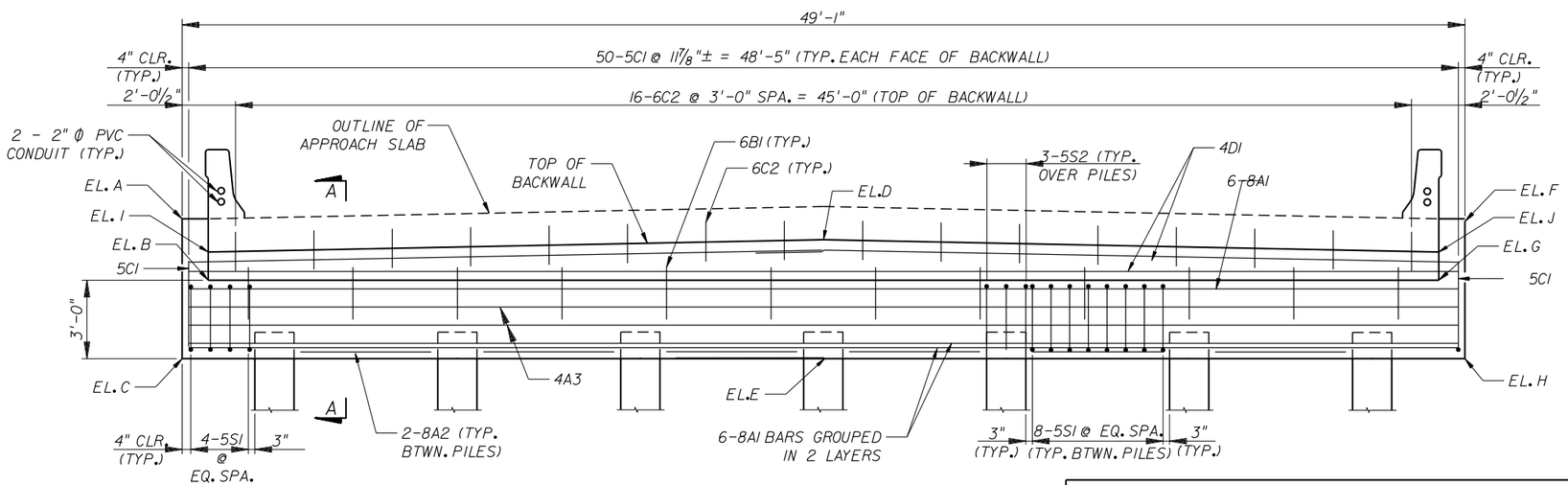

ELEVATION

END BENT NO. 1 ELEVATIONS			
POINT	ELEVATION	POINT	ELEVATION
A	63.170	F	63.170
B	61.215	G	61.215
C	58.215	H	58.215
D	62.391	I	61.920
E	58.215	J	61.920

PILE CUTOFF ELEVATIONS	
PILE NO.	END BENT NO. 1
1 Thru 9	59.2

NOTES:

1. FOR SECTION A-A, VIEWS B-B AND C-C, SEE SHEET B-XX.
2. FOR ESTIMATED QUANTITIES SEE SHEET B-XX.
3. FOR REINFORCING BAR LIST SEE SHEET B-XX.
4. DOWEL BARS 6B1 REQUIRED IN CAP. SEE SHEET B-XX.

BRIDGE NO. XXXXXX

REVISIONS					
DATE	BY	DESCRIPTION	DATE	BY	DESCRIPTION

STRUCTURES DESIGN OFFICE
CENTRAL OFFICE
605 Suwannee Street, MS 33
Tallahassee, Florida 32399-0450

DRAWN BY: XXX MM-YY
CHECKED BY: XXX MM-YY
DESIGNED BY: XXX MM-YY
CHECKED BY: XXX MM-YY

STATE OF FLORIDA
DEPARTMENT OF TRANSPORTATION

ROAD NO.	COUNTY	FINANCIAL PROJECT ID

SHEET TITLE: END BENT EXAMPLE 1
FLAT SLAB SUPERSTRUCTURE

PROJECT NAME:

REF. DWG. NO.

SHEET NO.

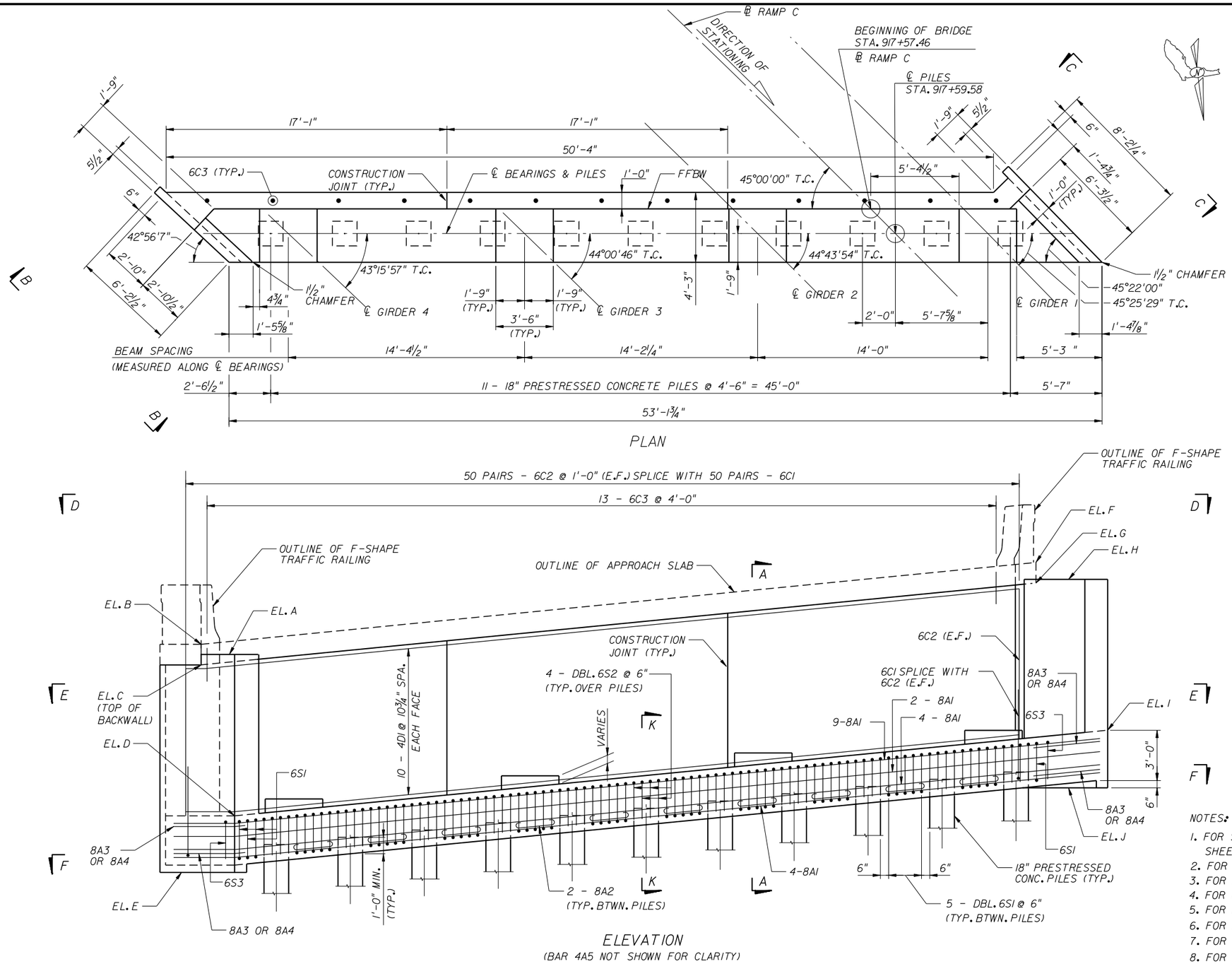

PEDESTAL ELEVATIONS	
BEAM NO.	END BENT 1
1	154.360
2	153.100
3	151.976
4	150.695

END BENT ELEVATIONS	
POINT	ELEVATION
A	158.468
B	159.468
C	158.218
D	149.554
E	146.054
F	164.139
G	162.889
H	163.056
I	154.312
J	150.812

NOTES:

1. FOR SECTIONS A-A, K-K AND PEDESTAL DETAILS SEE SHEET B-XX.
2. FOR VIEW D-D, SECTIONS E-E AND F-F, SEE SHEET B-XX.
3. FOR PILE CUT-OFF ELEVATIONS, SEE SHEET B-XX.
4. FOR PILE CAPACITY, SEE SHEET B-XX.
5. FOR BEARING DETAILS, SEE SHEETS B-XX, B-XX, AND B-XX.
6. FOR ESTIMATED QUANTITIES, SEE SHEET B-XX.
7. FOR END BENT REINFORCING BAR LIST, SEE SHEET B-XX.
8. FOR VIEWS B-B AND C-C SEE SHEET B-XX.

BRIDGE NO. XXXXXX

REVISIONS					
DATE	BY	DESCRIPTION	DATE	BY	DESCRIPTION

STRUCTURES DESIGN OFFICE
CENTRAL OFFICE
605 Suwannee Street, MS 33
Tallahassee, Florida 32399-0450

DRAWN BY: XXX MM-YY
CHECKED BY: XXX MM-YY
DESIGNED BY: XXX MM-YY
CHECKED BY: XXX MM-YY

STATE OF FLORIDA
DEPARTMENT OF TRANSPORTATION

ROAD NO.	COUNTY	FINANCIAL PROJECT ID

SHEET TITLE: END BENT EXAMPLE 2 LARGE SUPERELEVATION (SHEET 1 OF 2)

PROJECT NAME:

REF. DWG. NO.

SHEET NO.

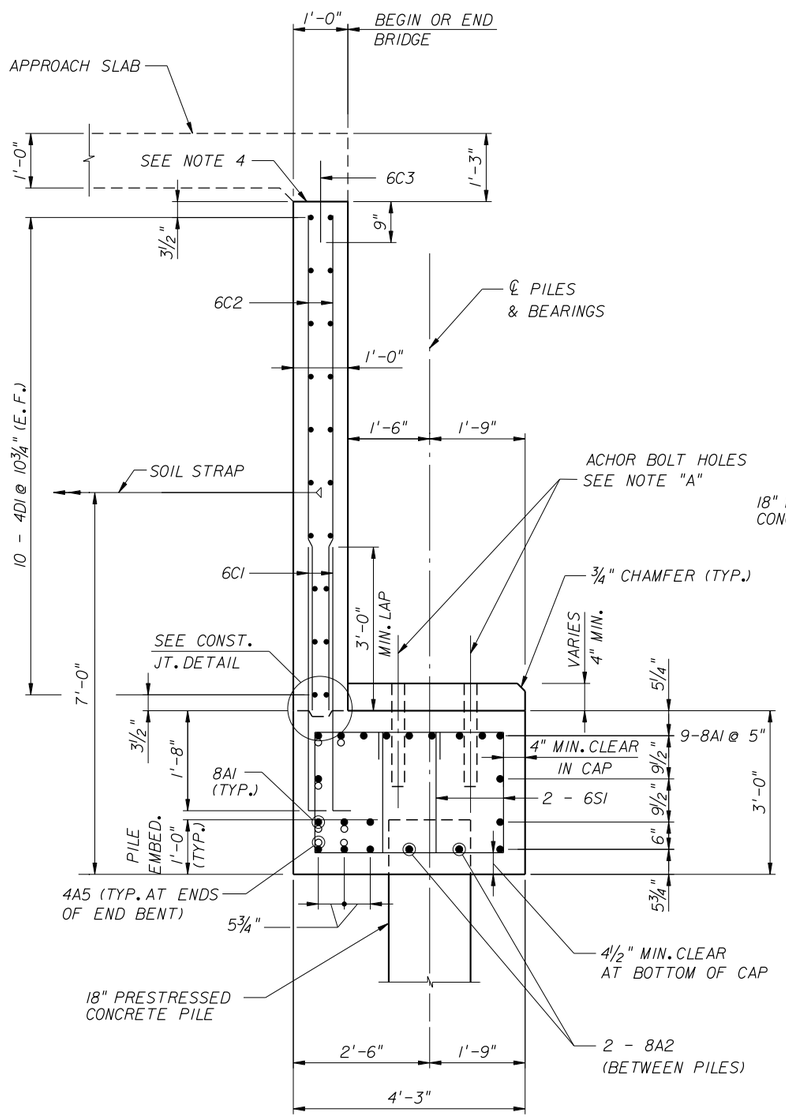

SECTION A-A

(PEDESTAL REINFORCEMENT NOT SHOWN)

NOTE A: PROVIDE 4" DIAMETER PREFORMED ANCHOR BOLT HOLES. ADJUST SPACING OF BARS 8AI, 6SI & 6S2 AS REQUIRED.

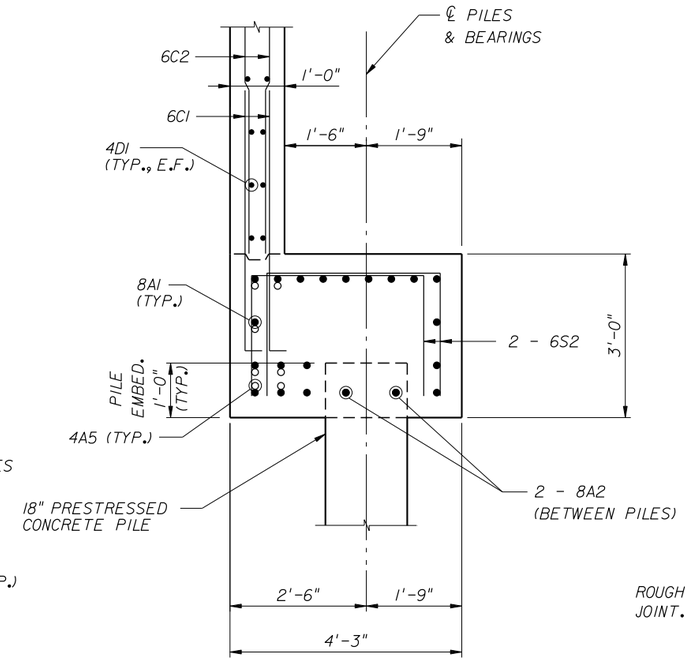

SECTION K-K

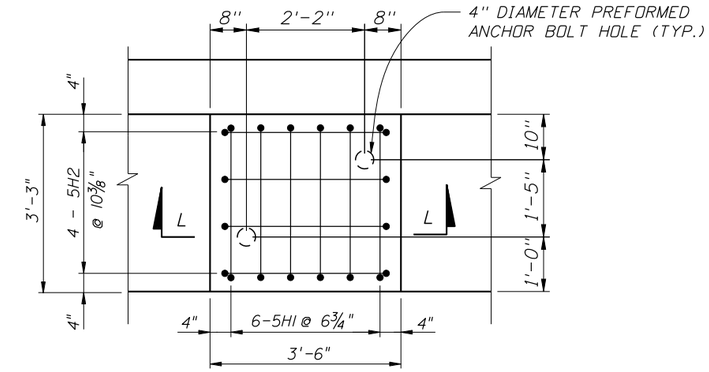

PEDESTAL PLAN

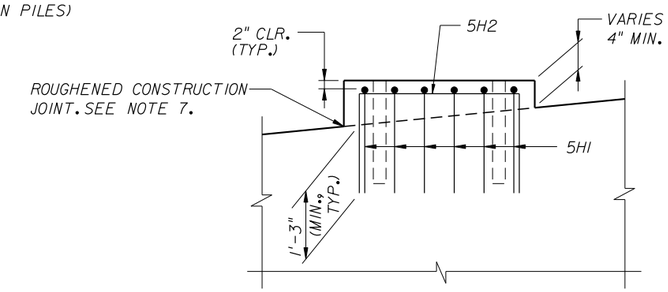

SECTION L-L

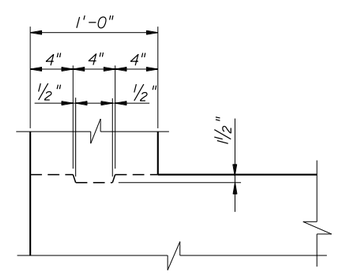

BACKWALL CONST. JOINT DETAIL

(VERTICAL JOINT SIMILAR)

NOTES:

1. FOR END BENT PLAN AND ELEVATION VIEWS, SEE SHEET 1 OF 2.
2. FOR OTHER END BENT DETAILS, SEE SHEET B-XX.
3. FOR END BENT REINFORCING BAR LIST, SEE SHEET B-XX.
4. PROVIDE TWO LAYERS OF #55 SMOOTH ROOFING PAPER BETWEEN BACKWALL AND APPROACH SLAB.
5. SOIL REINFORCEING STRAPS SHALL BE DESIGNED AND PROVIDED BY THE PROPRIETARY WALL COMPANY AND SUBMITTED TO THE ENGINEER FOR REVIEW AND APPROVAL. DESIGN LOAD SHALL BE 8.0 KIPS/FT WALL.
6. FOR DETAILS OF SOIL REINFORCING STRAPS AND ANCHORAGE INTO BACKWALL, SEE PROPRIETARY MSE WALL DRAWINGS.
7. ROUGHENED CONSTRUCTION JOINTS SHALL HAVE A MINIMUM ¼" AMPLITUDE ROUGHNESS.
8. PROVIDE 3" CONCRETE COVER EXCEPT WHERE NOTED.
9. FOR ESTIMATED QUANTITIES, SEE SHEET B-XX.

BRIDGE NO. XXXXXX

REVISIONS					
DATE	BY	DESCRIPTION	DATE	BY	DESCRIPTION

STRUCTURES DESIGN OFFICE
CENTRAL OFFICE
605 Suwannee Street, MS 33
Tallahassee, Florida 32399-0450

DRAWN BY: XXX MM-YY
CHECKED BY: XXX MM-YY
DESIGNED BY: XXX MM-YY
CHECKED BY: XXX MM-YY

STATE OF FLORIDA
DEPARTMENT OF TRANSPORTATION

ROAD NO.	COUNTY	FINANCIAL PROJECT ID

SHEET TITLE: END BENT EXAMPLE 2 LARGE SUPERELEVATION (SHEET 2 OF 2)

PROJECT NAME:

REF. DWG. NO.

SHEET NO.

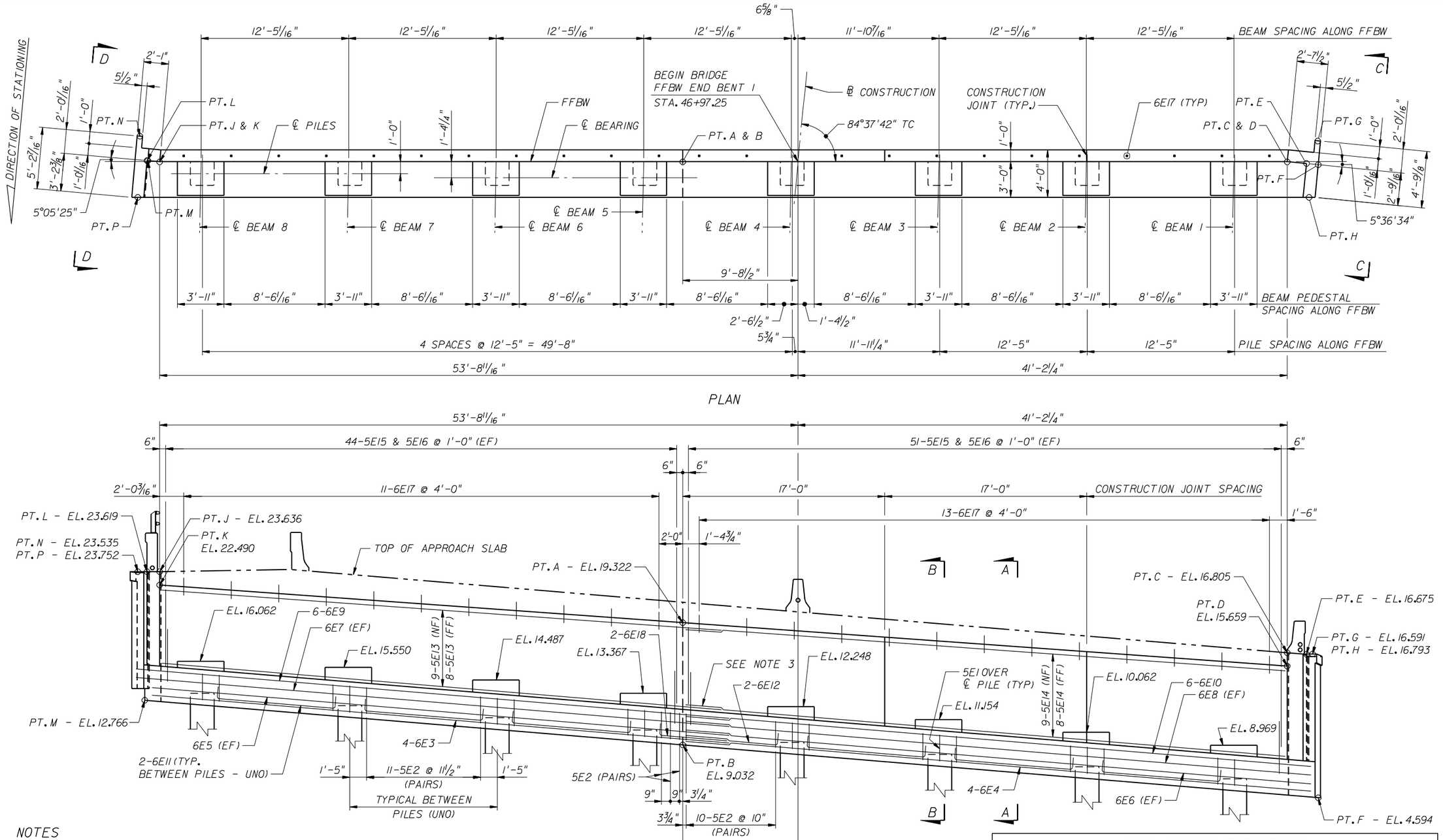

NOTES

1. ALL REINFORCING STEEL SHALL HAVE 4" CLEAR COVER, UNLESS NOTED OTHERWISE.
2. TOPS OF BEARING PEDESTALS ARE LEVEL.
3. PROVIDE 3'-0" MINIMUM LAP FOR #5 BARS AND 3'-8" MINIMUM LAP FOR #6 BARS.
4. SEE SHEET B1-XX FOR BACKWALL CONSTRUCTION JOINT DETAILS.

PILE CUTOFF ELEVATIONS

PILE NO.	1	2	3	4	5	6	7	8
ELEVATION	6.177	7.207	8.237	9.267	10.297	11.327	12.357	13.387

WORK THIS SHEET WITH SHEET(S) B1-XX THRU B1-XX.

BRIDGE NO. XXXXXX

REVISIONS					
DATE	BY	DESCRIPTION	DATE	BY	DESCRIPTION

STRUCTURES DESIGN OFFICE
CENTRAL OFFICE
605 Suwannee Street, MS 33
Tallahassee, Florida 32399-0450

DRAWN BY: XXX MM-YY
CHECKED BY: XXX MM-YY
DESIGNED BY: XXX MM-YY
CHECKED BY: XXX MM-YY

STATE OF FLORIDA
DEPARTMENT OF TRANSPORTATION

ROAD NO.	COUNTY	FINANCIAL PROJECT ID

SHEET TITLE: END BENT EXAMPLE 3
PHASED CONSTRUCTION WITH SIDEWALK

PROJECT NAME:

REF. DWG. NO.

SHEET NO.

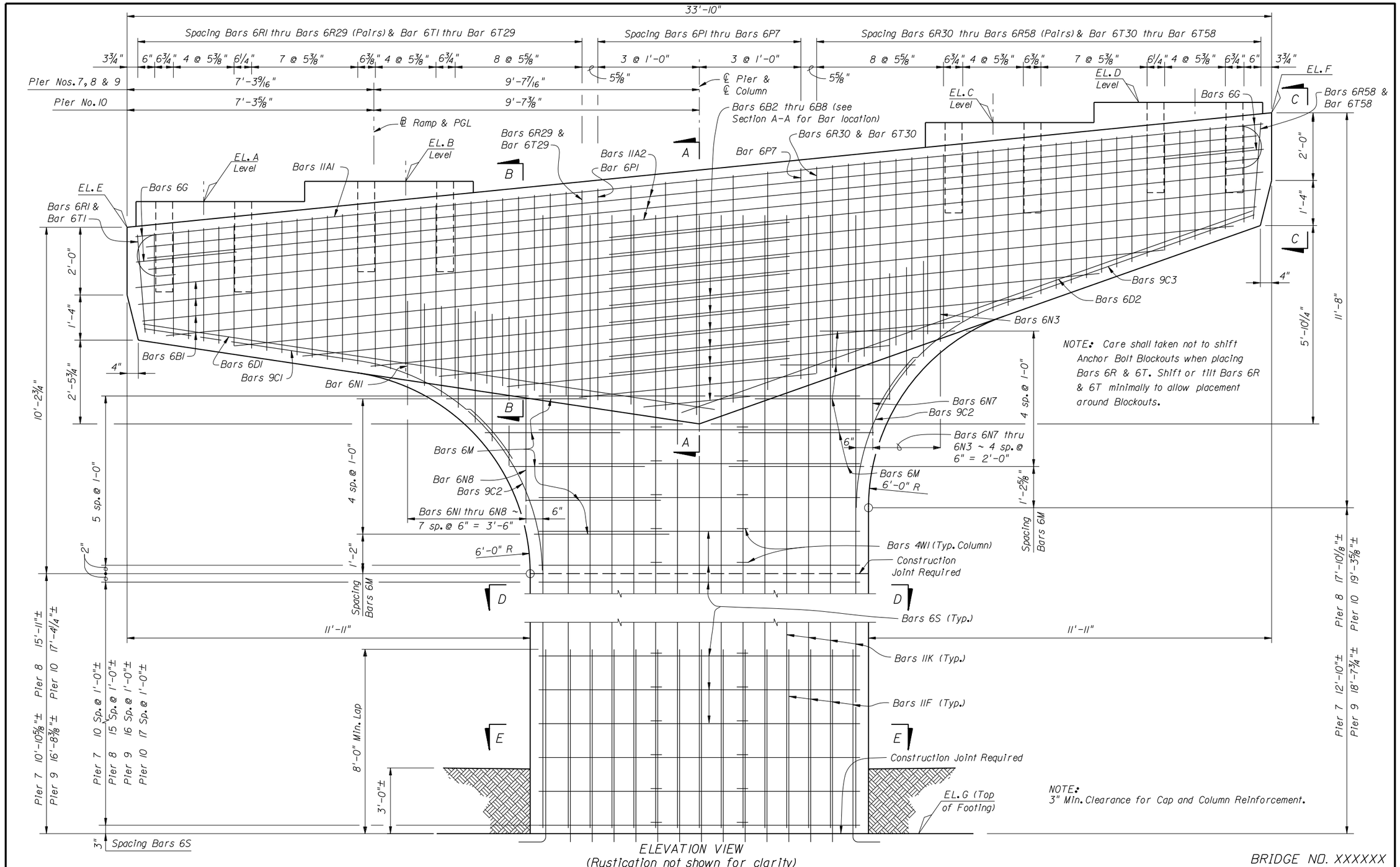

ELEVATION VIEW
(Rustication not shown for clarity)

BRIDGE NO. XXXXXX

REVISIONS					
DATE	BY	DESCRIPTION	DATE	BY	DESCRIPTION

STRUCTURES DESIGN OFFICE
CENTRAL OFFICE
605 Suwannee Street, MS 33
Tallahassee, Florida 32399-0450

DRAWN BY: XXX MM-YY
CHECKED BY: XXX MM-YY
DESIGNED BY: XXX MM-YY
CHECKED BY: XXX MM-YY

STATE OF FLORIDA
DEPARTMENT OF TRANSPORTATION

ROAD NO.	COUNTY	FINANCIAL PROJECT ID

SHEET TITLE: PIER EXAMPLE 1 HAMMERHEAD PIER (SHEET 1 OF 3)

PROJECT NAME:

REF. DWG. NO.

SHEET NO.

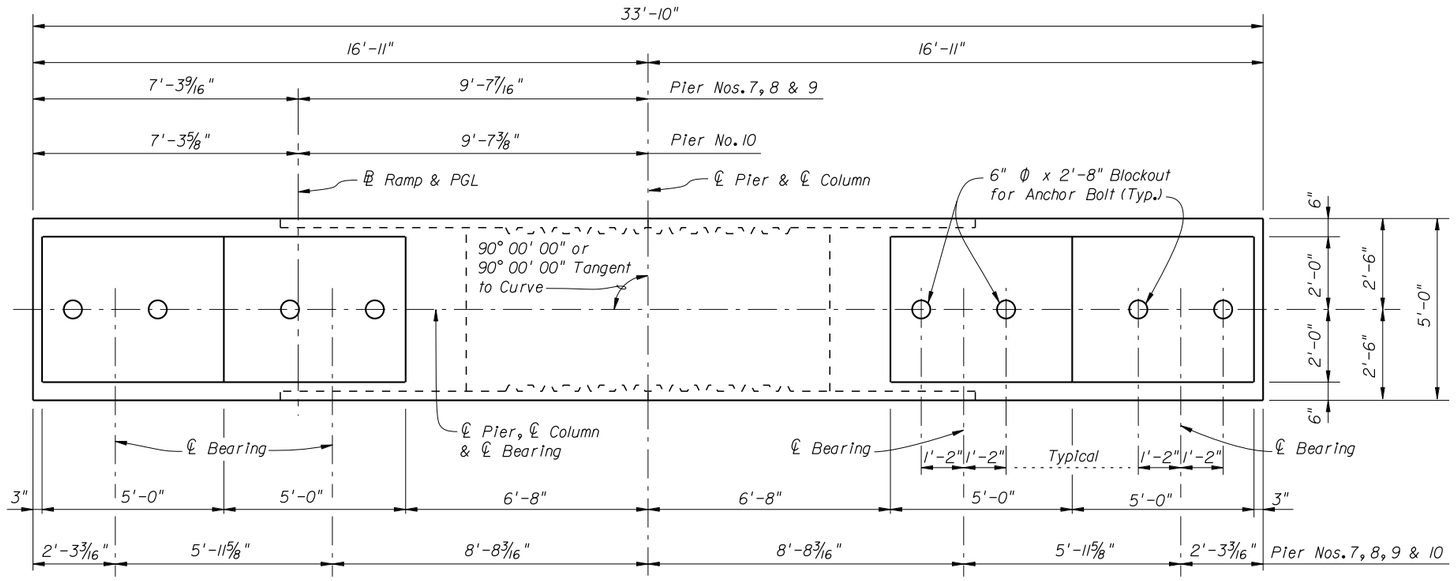

PLAN VIEW
PIER NOS. 7, 8, 9 & 10

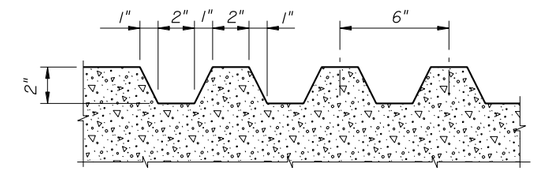

RUSTICATION DETAIL

NOTE:
Rustication shall be applied to pier column from top of footing to bottom of pier cap.

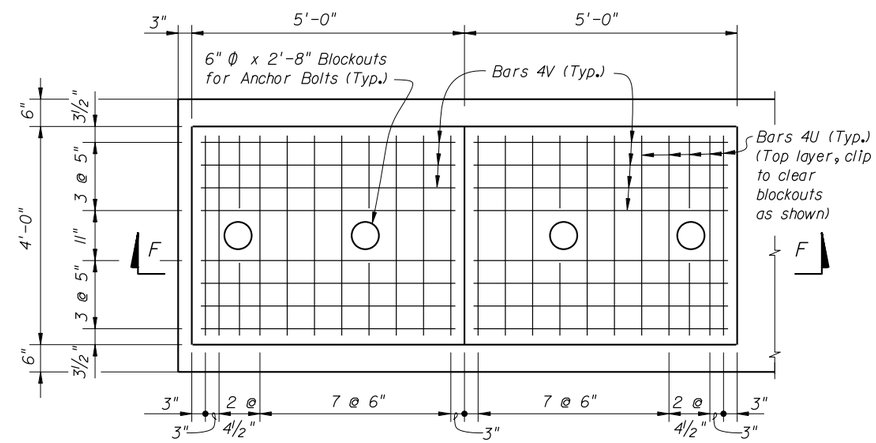

PEDESTAL PLAN VIEW

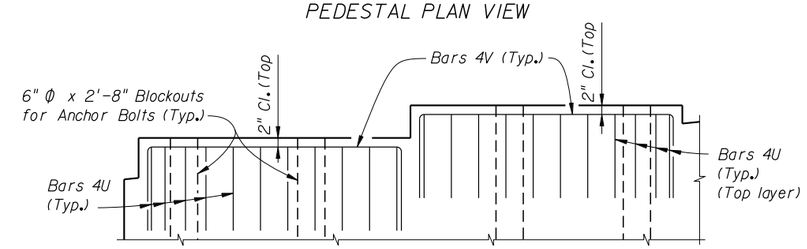

SECTION F-F
PEDESTAL DETAILS - PIER NOS. 7, 8, 9, & 10

BRIDGE NO. XXXXXX

ESTIMATED QUANTITIES					
ITEM	UNIT	QUANTITY			
		Pier No. 7	Pier No. 8	Pier No. 9	Pier No. 10
Class V Concrete (Mass) (Substructure)	C.Y.	152.69	190.86	171.25	193.16
Reinforcing Steel (Substructure)	LB.	33569	38866	35113	39281
24" Sq. Prestressed Concrete Piles	L.F.	**	**	**	**

** See Summary of Bridge Pay Items

CONCRETE BREAKDOWN				
ITEM	Pier No. 7	Pier No. 8	Pier No. 9	Pier No. 10
Cap	35.71	35.71	35.71	35.70
Column	27.28	35.41	36.69	37.72
Footing	98.85	119.74	98.85	119.74

TABLE OF ELEVATIONS							
PIER NO.	ELEV. A	ELEV. B	ELEV. C	ELEV. D	ELEV. E	ELEV. F	ELEV. G
Pier No. 7	114.576	115.174	116.910	117.507	113.718	117.101	92.600
Pier No. 8	116.005	116.602	118.338	118.935	115.147	118.530	89.000
Pier No. 9	116.791	117.388	119.125	119.722	115.933	119.316	89.000
Pier No. 10	117.445	118.036	119.754	120.344	116.586	119.970	89.000

REVISIONS					
DATE	BY	DESCRIPTION	DATE	BY	DESCRIPTION

STRUCTURES DESIGN OFFICE
CENTRAL OFFICE
605 Suwannee Street, MS 33
Tallahassee, Florida 32399-0450

DRAWN BY: XXX MM-YY
CHECKED BY: XXX MM-YY
DESIGNED BY: XXX MM-YY
CHECKED BY: XXX MM-YY

STATE OF FLORIDA
DEPARTMENT OF TRANSPORTATION

ROAD NO.	COUNTY	FINANCIAL PROJECT ID

SHEET TITLE: PIER EXAMPLE 1 HAMMERHEAD PIER (SHEET 2 OF 3)
PROJECT NAME:
REF. DWG. NO.
SHEET NO.

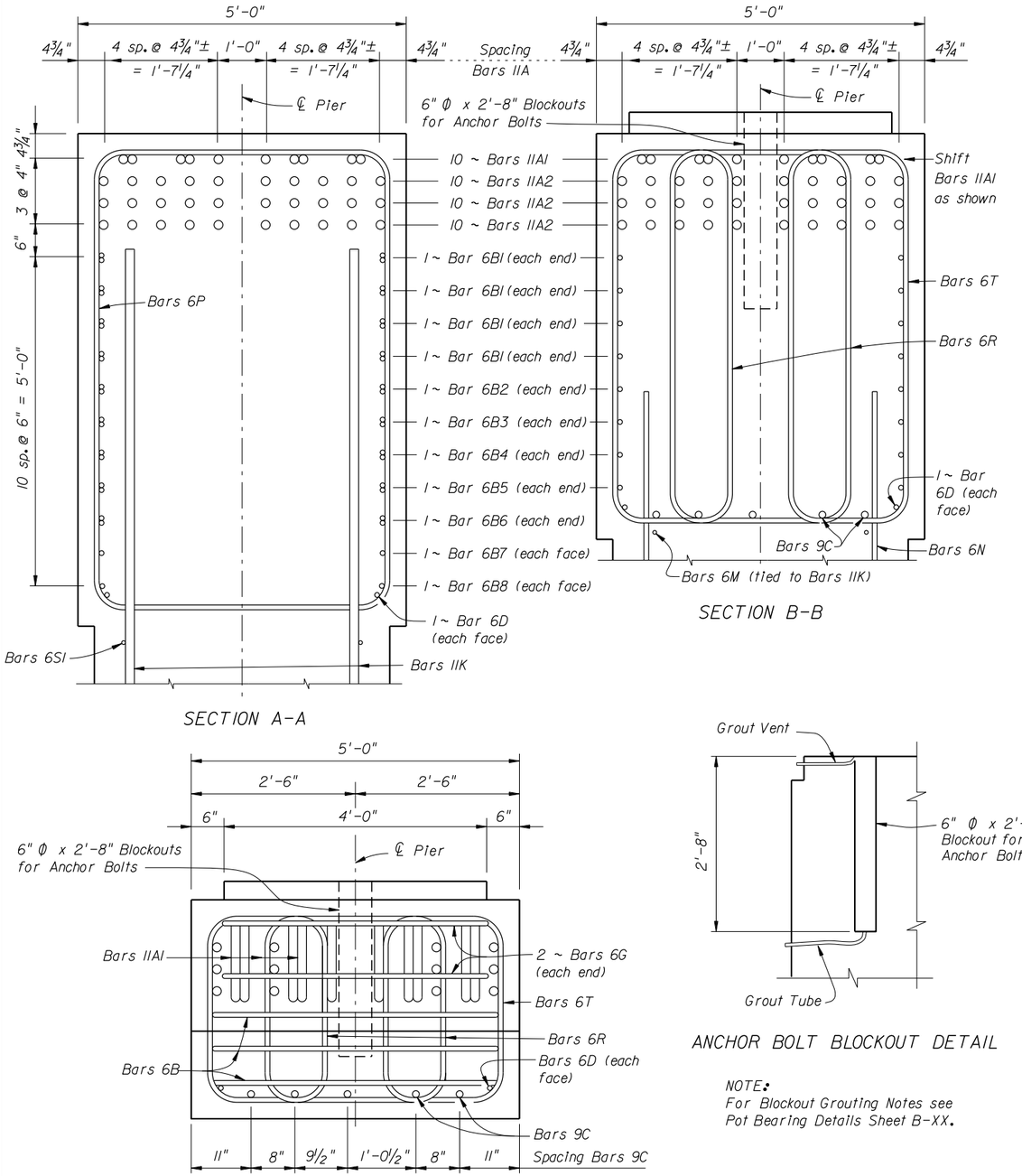

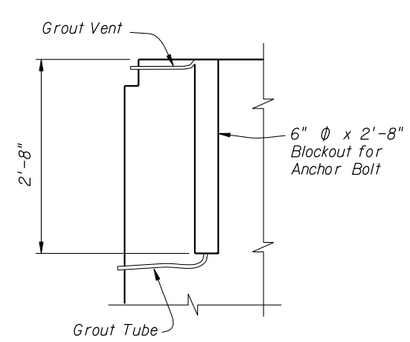

ANCHOR BOLT BLOCKOUT DETAIL

NOTE:
For Blockout Grouting Notes see Pot Bearing Details Sheet B-XX.

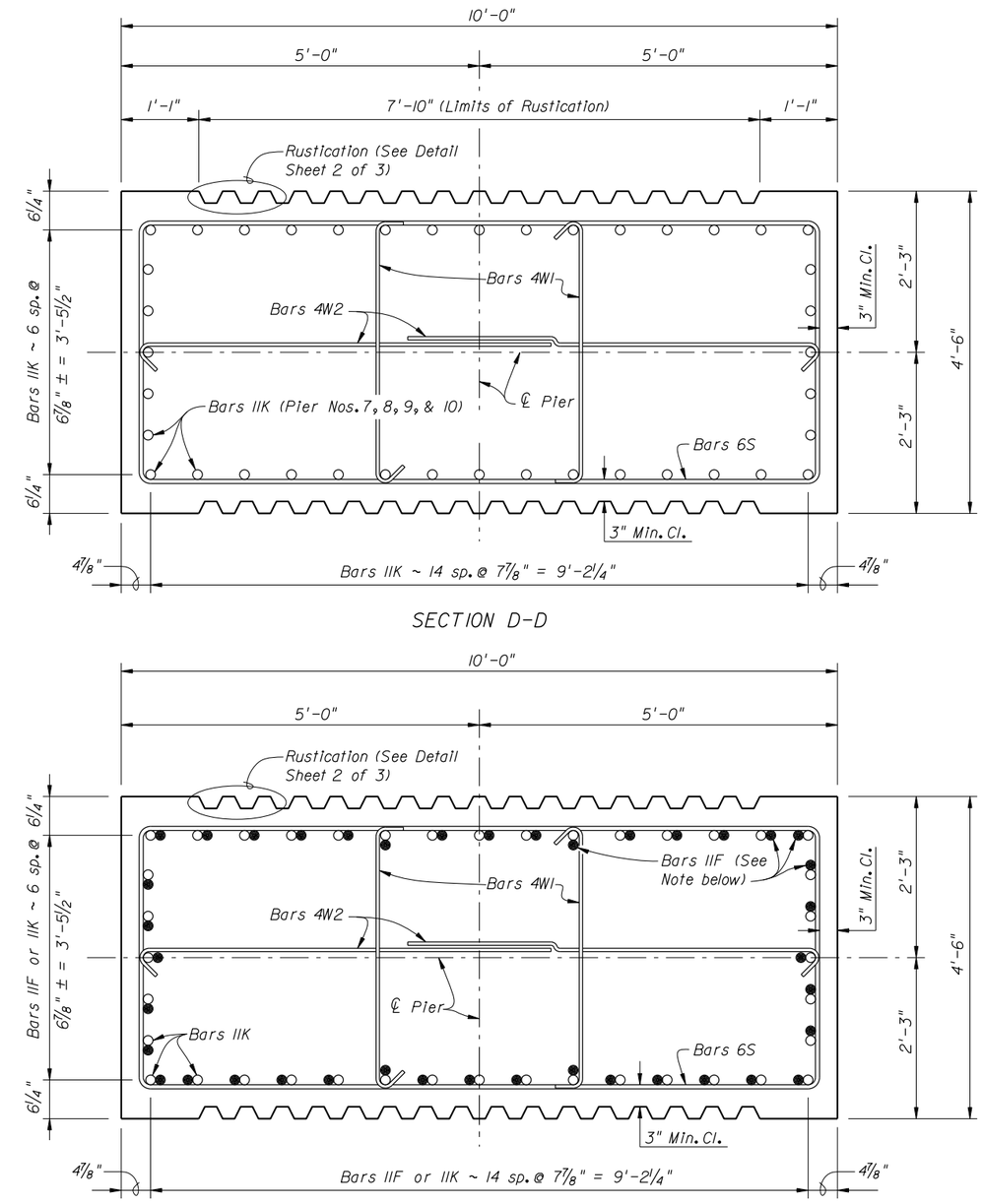

NOTE:
Place Bars 11F (●) as shown to allow for proper placement of Bars 11K
Alternate ends of Bars 4W1 at each level vertically Typ. all Piers.

PIER NOS. 7, 8, 9 & 10 DETAILS

BRIDGE NO. XXXXXX

REVISIONS					
DATE	BY	DESCRIPTION	DATE	BY	DESCRIPTION

STRUCTURES DESIGN OFFICE
CENTRAL OFFICE
605 Suwannee Street, MS 33
Tallahassee, Florida 32399-0450

DRAWN BY: XXX MM-YY
CHECKED BY: XXX MM-YY
DESIGNED BY: XXX MM-YY
CHECKED BY: XXX MM-YY

STATE OF FLORIDA
DEPARTMENT OF TRANSPORTATION

ROAD NO.	COUNTY	FINANCIAL PROJECT ID

SHEET TITLE: PIER EXAMPLE 1 HAMMERHEAD PIER (SHEET 3 OF 3)

PROJECT NAME:

REF. DWG. NO.

SHEET NO.

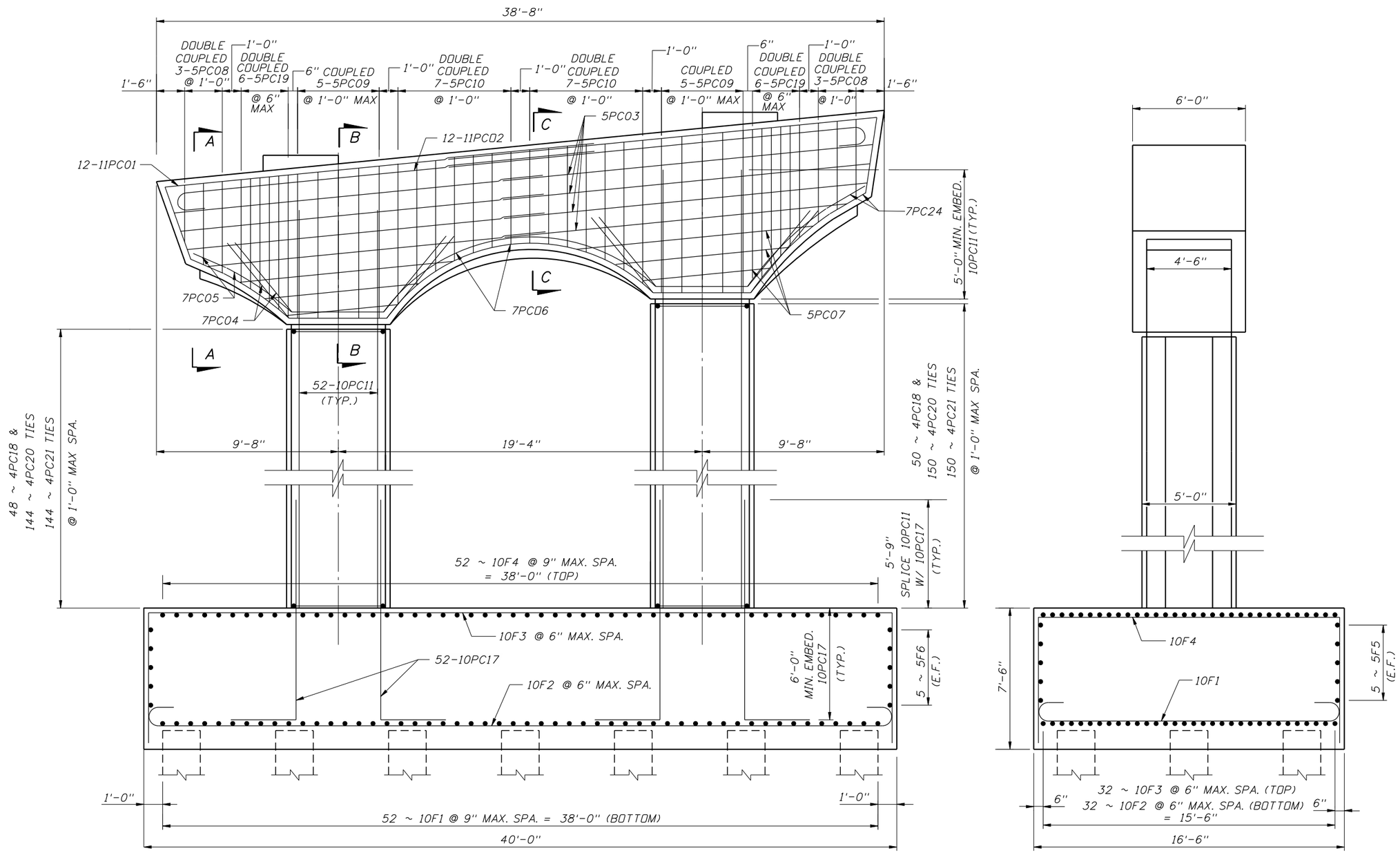

BRIDGE NO. XXXXXX

REVISIONS					
DATE	BY	DESCRIPTION	DATE	BY	DESCRIPTION

STRUCTURES DESIGN OFFICE
CENTRAL OFFICE
605 Suwannee Street, MS 33
Tallahassee, Florida 32399-0450

DRAWN BY: XXX MM-YY
CHECKED BY: XXX MM-YY
DESIGNED BY: XXX MM-YY
CHECKED BY: XXX MM-YY

STATE OF FLORIDA
DEPARTMENT OF TRANSPORTATION

ROAD NO.	COUNTY	FINANCIAL PROJECT ID

SHEET TITLE: PIER EXAMPLE 2 MULTI-COLUMN PIER (SHEET 1 OF 2)

PROJECT NAME:

REF. DWG. NO.

SHEET NO.

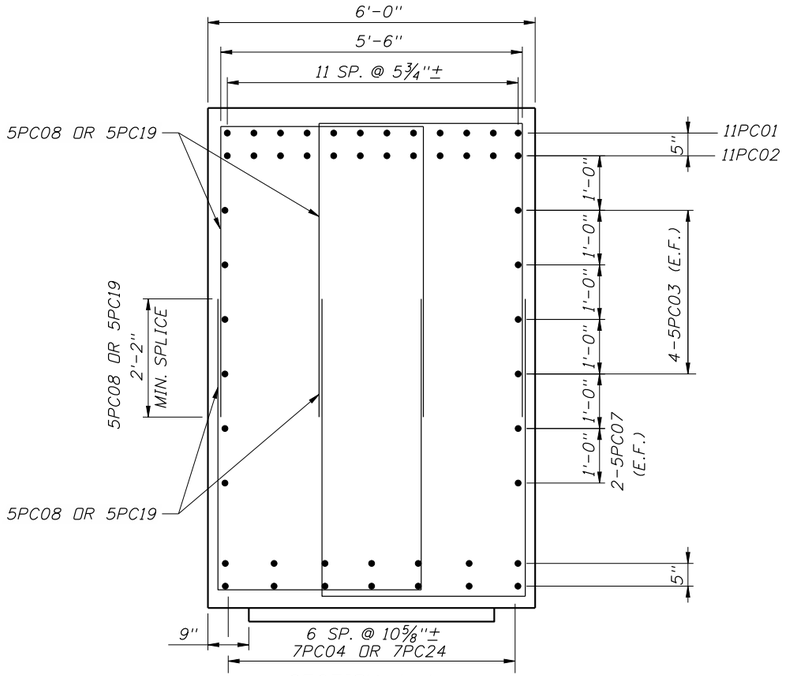

SECTION A-A

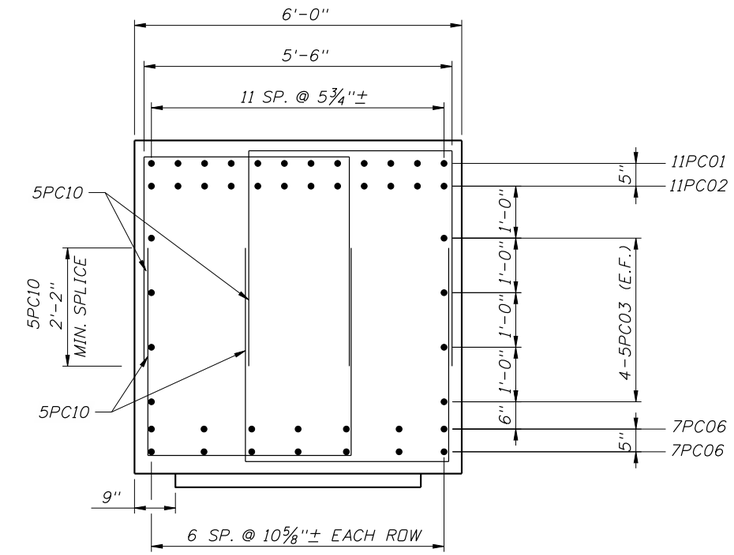

SECTION C-C

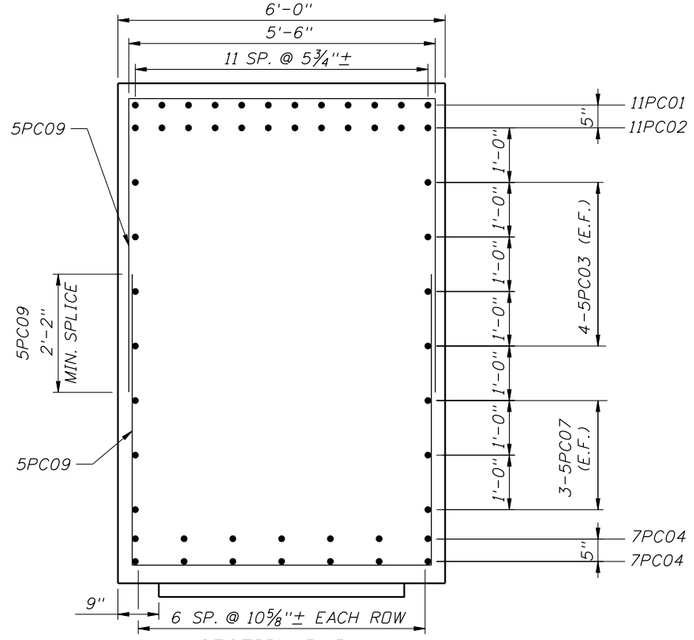

SECTION B-B

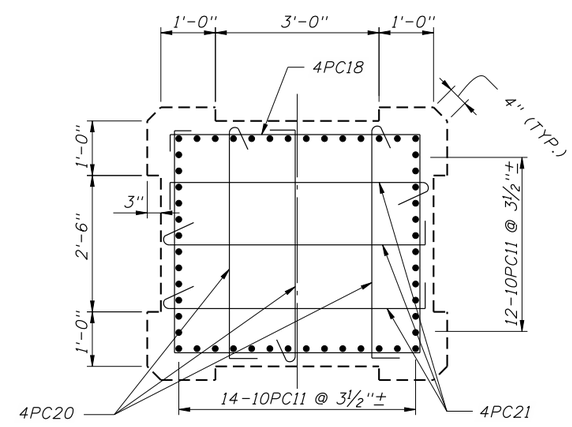

COLUMN DETAIL

BRIDGE NO. XXXXXX

REVISIONS					
DATE	BY	DESCRIPTION	DATE	BY	DESCRIPTION

STRUCTURES DESIGN OFFICE
CENTRAL OFFICE
605 Suwannee Street, MS 33
Tallahassee, Florida 32399-0450

DRAWN BY: XXX MM-YY
CHECKED BY: XXX MM-YY
DESIGNED BY: XXX MM-YY
CHECKED BY: XXX MM-YY

STATE OF FLORIDA
DEPARTMENT OF TRANSPORTATION

ROAD NO.	COUNTY	FINANCIAL PROJECT ID

SHEET TITLE: PIER EXAMPLE 2 MULTI-COLUMN PIER (SHEET 2 OF 2)

PROJECT NAME:

REF. DWG. NO.

SHEET NO.

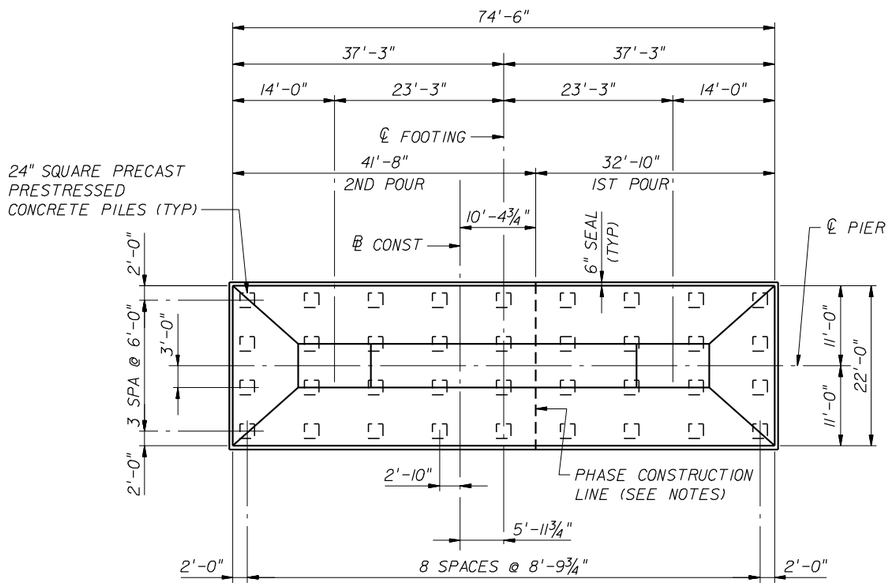

PLAN OF FOOTING

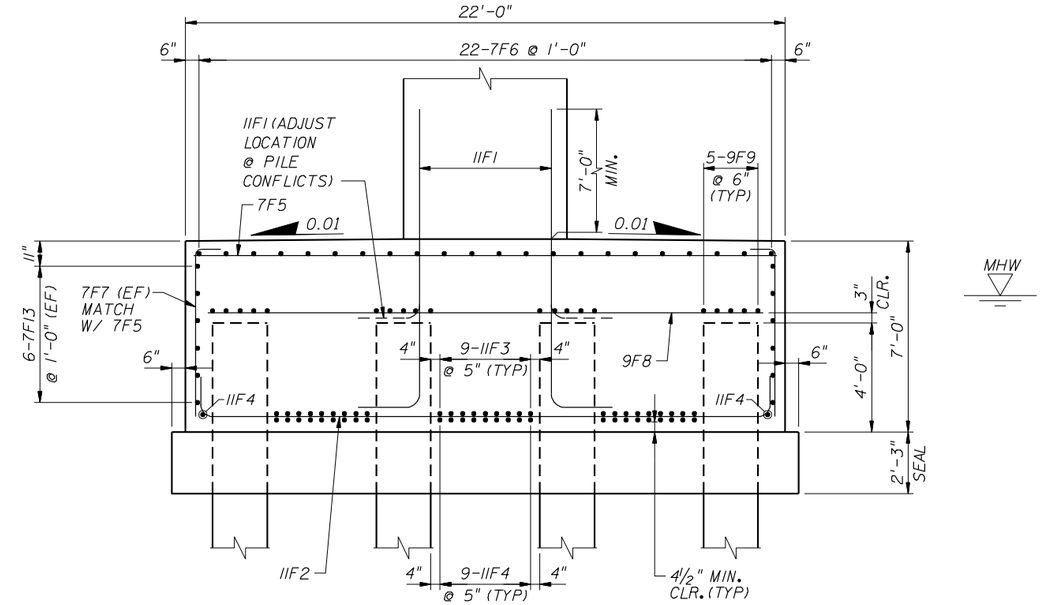

POUR 1 - LONGITUDINAL SECTION

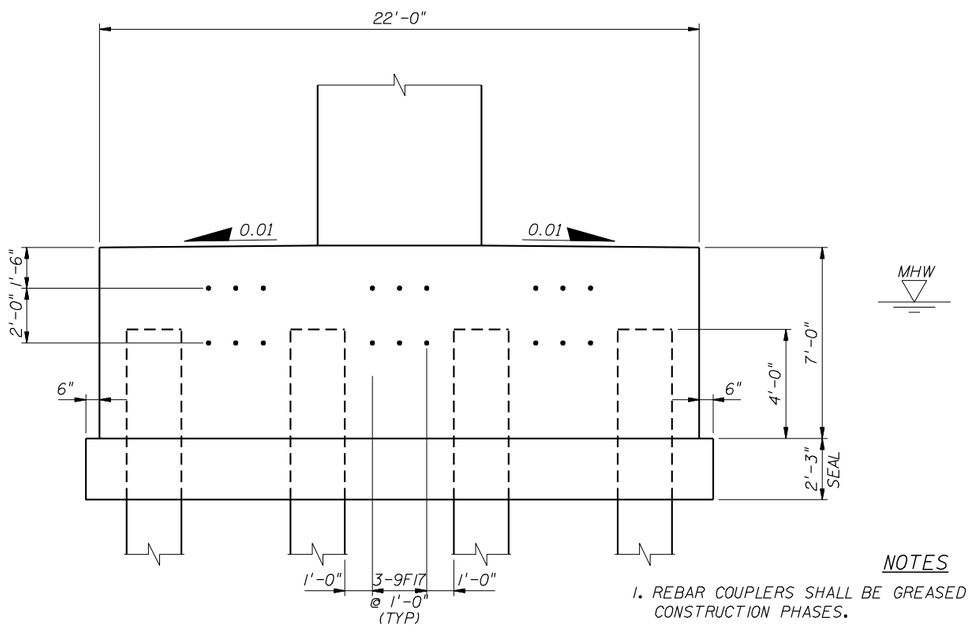

DOWEL DETAIL

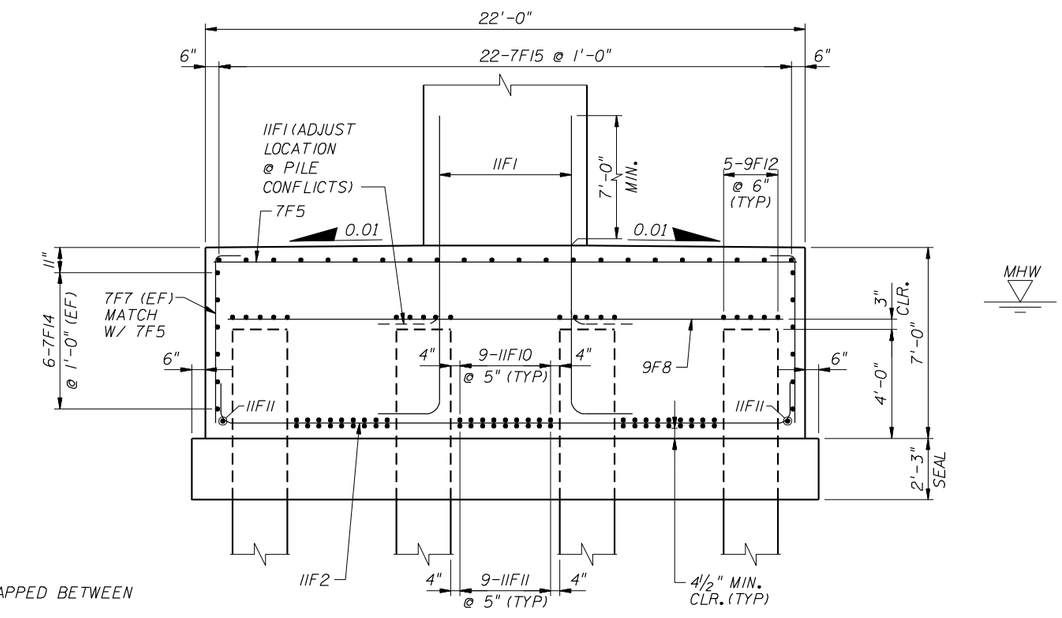

POUR 2 - LONGITUDINAL SECTION

NOTES

1. REBAR COUPLERS SHALL BE GREASED & CAPPED BETWEEN CONSTRUCTION PHASES.

2. FOR PHASE 3B CONSTRUCTION DRILL & EPOXY #9 DOWEL BARS IN ACCORDANCE WITH DOWEL DETAIL USING AN EPOXY FOR STRUCTURAL APPLICATIONS. APPLY EPOXY BONDING COMPOUND TO CONCRETE SURFACE TO ENHANCE CONCRETE BOND BETWEEN PHASE 1A AND PHASE 3B CONSTRUCTION.

BRIDGE NO. XXXXXX

REVISIONS					
DATE	BY	DESCRIPTION	DATE	BY	DESCRIPTION

STRUCTURES DESIGN OFFICE
CENTRAL OFFICE
605 Suwannee Street, MS 33
Tallahassee, Florida 32399-0450

DRAWN BY: XXX MM-YY
CHECKED BY: XXX MM-YY
DESIGNED BY: XXX MM-YY
CHECKED BY: XXX MM-YY

STATE OF FLORIDA
DEPARTMENT OF TRANSPORTATION

ROAD NO.	COUNTY	FINANCIAL PROJECT ID

SHEET TITLE: PIER FOOTING DETAILS EXAMPLE 1 WITH COFFERDAM SEAL AND SHIP IMPACT (SHEET 1 OF 2)

PROJECT NAME:

REF. DWG. NO.

SHEET NO.

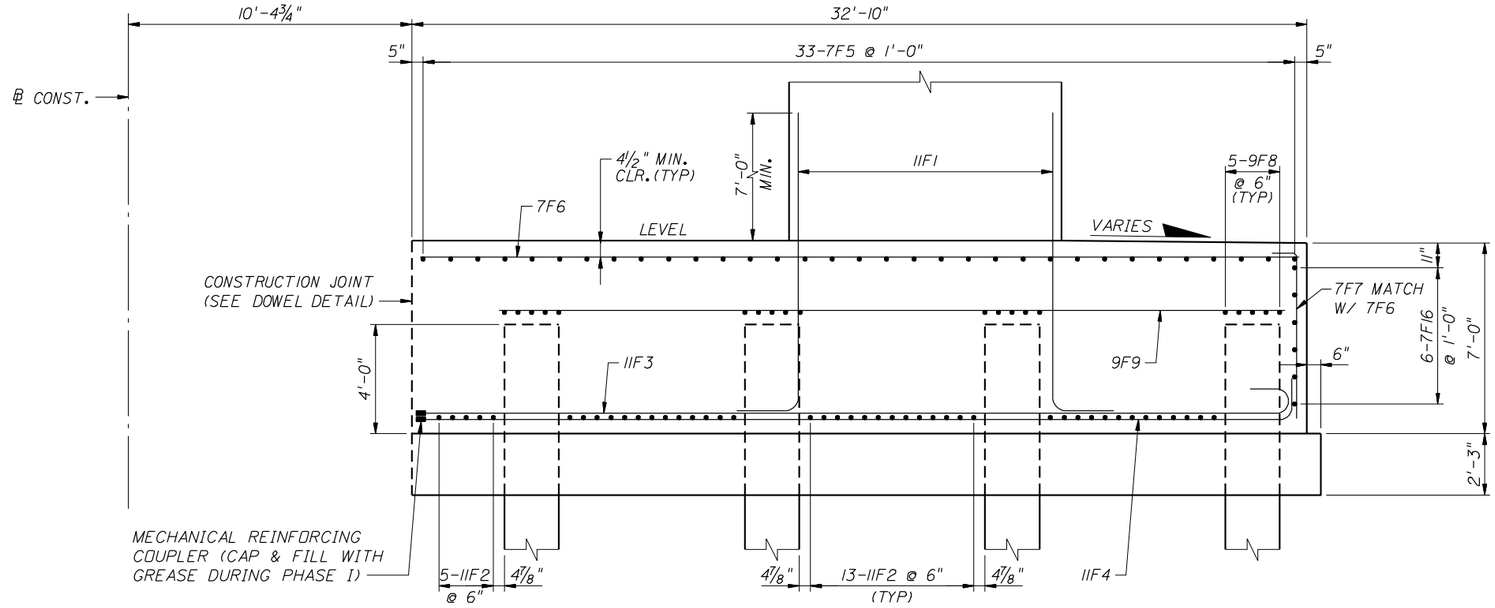

POUR 1 - TRANSVERSE SECTION

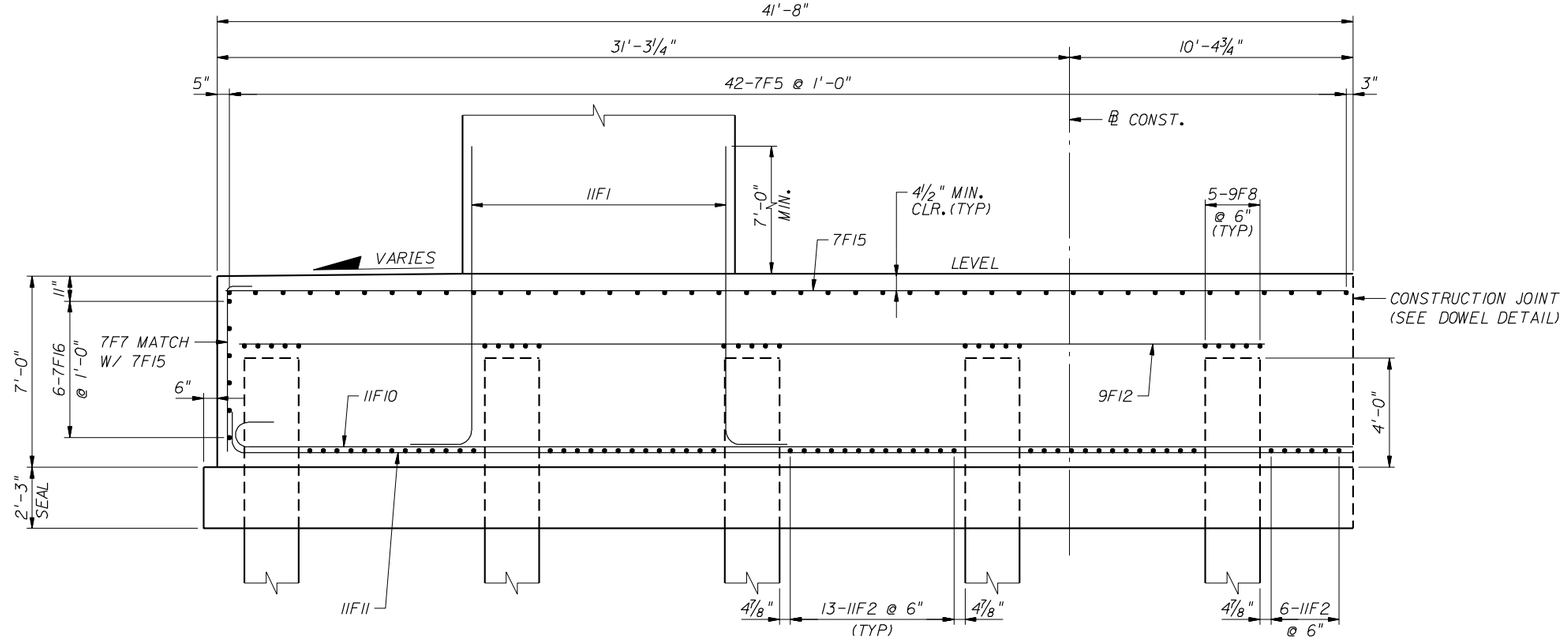

POUR 2 - TRANSVERSE SECTION

BRIDGE NO. XXXXXX

REVISIONS					
DATE	BY	DESCRIPTION	DATE	BY	DESCRIPTION

STRUCTURES DESIGN OFFICE
CENTRAL OFFICE
605 Suwannee Street, MS 33
Tallahassee, Florida 32399-0450

DRAWN BY: XXX MM-YY
CHECKED BY: XXX MM-YY
DESIGNED BY: XXX MM-YY
CHECKED BY: XXX MM-YY

STATE OF FLORIDA
DEPARTMENT OF TRANSPORTATION

ROAD NO.	COUNTY	FINANCIAL PROJECT ID

SHEET TITLE: PIER FOOTING DETAILS EXAMPLE 1 WITH COFFERDAM SEAL AND SHIP IMPACT (SHEET 2 OF 2)

PROJECT NAME:

REF. DWG. NO.

SHEET NO.

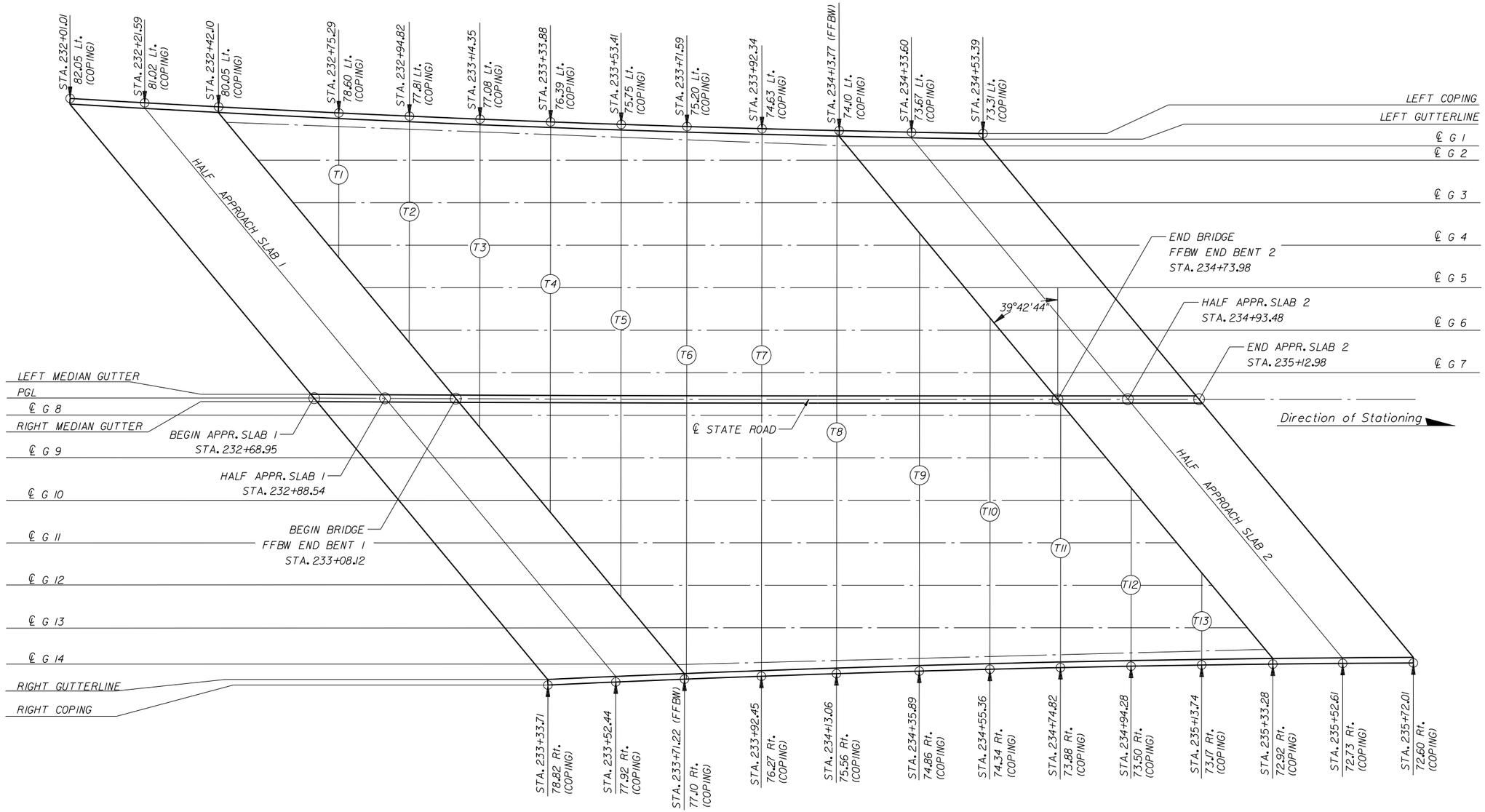

FINISH GRADE ELEVATIONS

BRIDGE NO. XXXXXX

REVISIONS					
DATE	BY	DESCRIPTION	DATE	BY	DESCRIPTION

STRUCTURES DESIGN OFFICE
CENTRAL OFFICE
605 Suwannee Street, MS 33
Tallahassee, Florida 32399-0450

DRAWN BY: XXX MM-YY
CHECKED BY: XXX MM-YY
DESIGNED BY: XXX MM-YY
CHECKED BY: XXX MM-YY

STATE OF FLORIDA
DEPARTMENT OF TRANSPORTATION

ROAD NO.	COUNTY	FINANCIAL PROJECT ID

SHEET TITLE: FINISH GRADE ELEVATIONS EXAMPLE 1
SKEWED STEEL SUPERSTRUCTURE (SHEET 1 OF 2)

PROJECT NAME:

REF. DWG. NO.

SHEET NO.

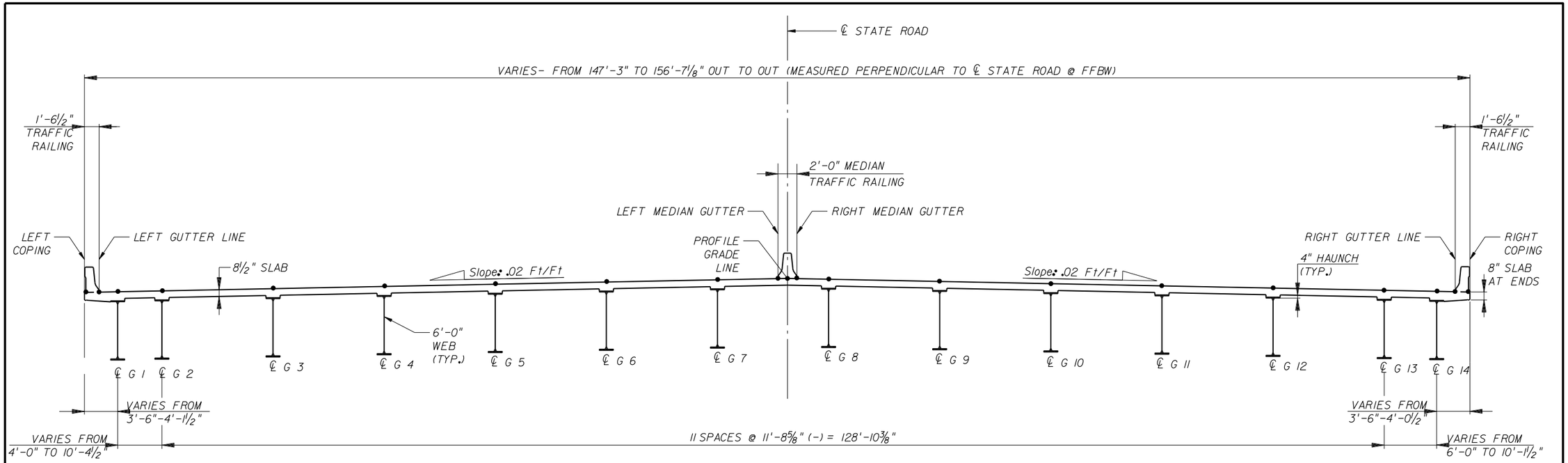

TYPICAL SECTION
(LOOKING AHEAD STATION)

LOCATION	BEGIN APPR. SLAB	HALF APPR. SLAB	FFBW END BENT 1	T-1	T-2	T-3	T-4	T-5	T-6	T-7	T-8	T-9	T-10	T-11	T-12	T-13	FFBW END BENT 2	HALF APPR. SLAB	END APPR. SLAB	LOCATION
LEFT COPING	135.776	135.986	136.186	136.492	136.662	136.824	136.979	137.126	137.256	137.396	137.528						137.532	137.649	137.758	LEFT COPING
LEFT GUTTERLINE	135.806	136.016	136.216	136.523	136.693	136.855	137.010	137.157	137.287	137.427	137.558						137.562	137.680	137.788	LEFT GUTTERLINE
℄ G 1			136.290	136.568	136.734	136.895	137.049	137.197	137.329	137.473	137.610						137.628			℄ G 1
℄ G 2			136.572	136.753	136.905	137.051	137.190	137.323	137.442	137.570	137.691						137.725			℄ G 2
℄ G 3			136.887	136.988	137.140	137.286	137.425	137.558	137.676	138.804	137.925						138.012			℄ G 3
℄ G 4			137.201	137.223	137.375	137.520	137.659	137.792	137.910	138.038	138.159	138.284					138.298			℄ G 4
℄ G 5			137.513		137.610	137.755	137.894	138.027	138.145	138.273	138.394	138.518					138.582			℄ G 5
℄ G 6			137.823		137.844	137.990	138.129	138.261	138.379	138.507	138.628	138.752	138.851				138.865			℄ G 6
℄ G 7			138.132			138.224	138.363	138.496	138.614	138.741	138.862	138.987	139.086				139.146			℄ G 7
LEFT MEDIAN GUTTER	137.986	138.143	138.293			138.348	138.489	138.622	138.741	138.869	138.990	139.114	139.213				139.298	139.385	139.465	LEFT MEDIAN GUTTER
℄ STATE ROAD (P.G.L.)	138.013	138.170	138.320			138.368	138.509	138.642	138.761	139.889	139.010	139.134	139.233				139.322	139.408	139.488	℄ STATE ROAD (P.G.L.)
RIGHT MEDIAN GUTTER	138.000	138.156	138.306			138.348	138.489	138.622	138.741	139.869	138.990	139.114	139.213				139.306	139.392	139.471	RIGHT MEDIAN GUTTER
℄ G 8			138.257			138.278	138.420	138.554	138.674	138.802	138.923	139.048	139.147	139.239			139.252			℄ G 8
℄ G 9			138.095				137.186	138.320	138.439	138.568	138.689	138.813	138.913	139.005			139.061			℄ G 9
℄ G 10			137.932				137.952	138.086	138.205	138.334	138.454	138.579	138.678	138.771	138.856		139.868			℄ G 10
℄ G 11			137.766					137.852	137.971	138.099	138.220	138.345	138.444	138.536	138.622		138.674			℄ G 11
℄ G 12			137.599					137.618	137.737	137.865	137.986	138.110	138.210	138.302	138.388	138.467	138.478			℄ G 12
℄ G 13			137.430						137.503	137.631	137.752	137.876	137.975	138.068	138.153	138.233	138.280			℄ G 13
℄ G 14			137.282						137.301	137.440	137.571	137.708	137.817	137.919	138.015	138.104	138.179			℄ G 14
RIGHT GUTTERLINE	136.960	137.106	137.246						137.251	137.395	137.530	137.668	137.777	137.879	138.973	138.058	138.136	138.206	138.267	RIGHT GUTTERLINE
RIGHT COPING	136.929	137.076	137.216						137.220	137.364	137.500	137.637	137.747	137.848	138.942	138.027	138.105	138.175	138.236	RIGHT COPING

BRIDGE NO. XXXXXX

REVISIONS					
DATE	BY	DESCRIPTION	DATE	BY	DESCRIPTION

STRUCTURES DESIGN OFFICE
CENTRAL OFFICE
605 Suwannee Street, MS 33
Tallahassee, Florida 32399-0450

DRAWN BY: XXX MM-YY
CHECKED BY: XXX MM-YY
DESIGNED BY: XXX MM-YY
CHECKED BY: XXX MM-YY

STATE OF FLORIDA
DEPARTMENT OF TRANSPORTATION

ROAD NO.	COUNTY	FINANCIAL PROJECT ID

SHEET TITLE: FINISH GRADE ELEVATIONS EXAMPLE 1
SKEWED STEEL SUPERSTRUCTURE (SHEET 2 OF 2)

PROJECT NAME:

REF. DWG. NO.

SHEET NO.

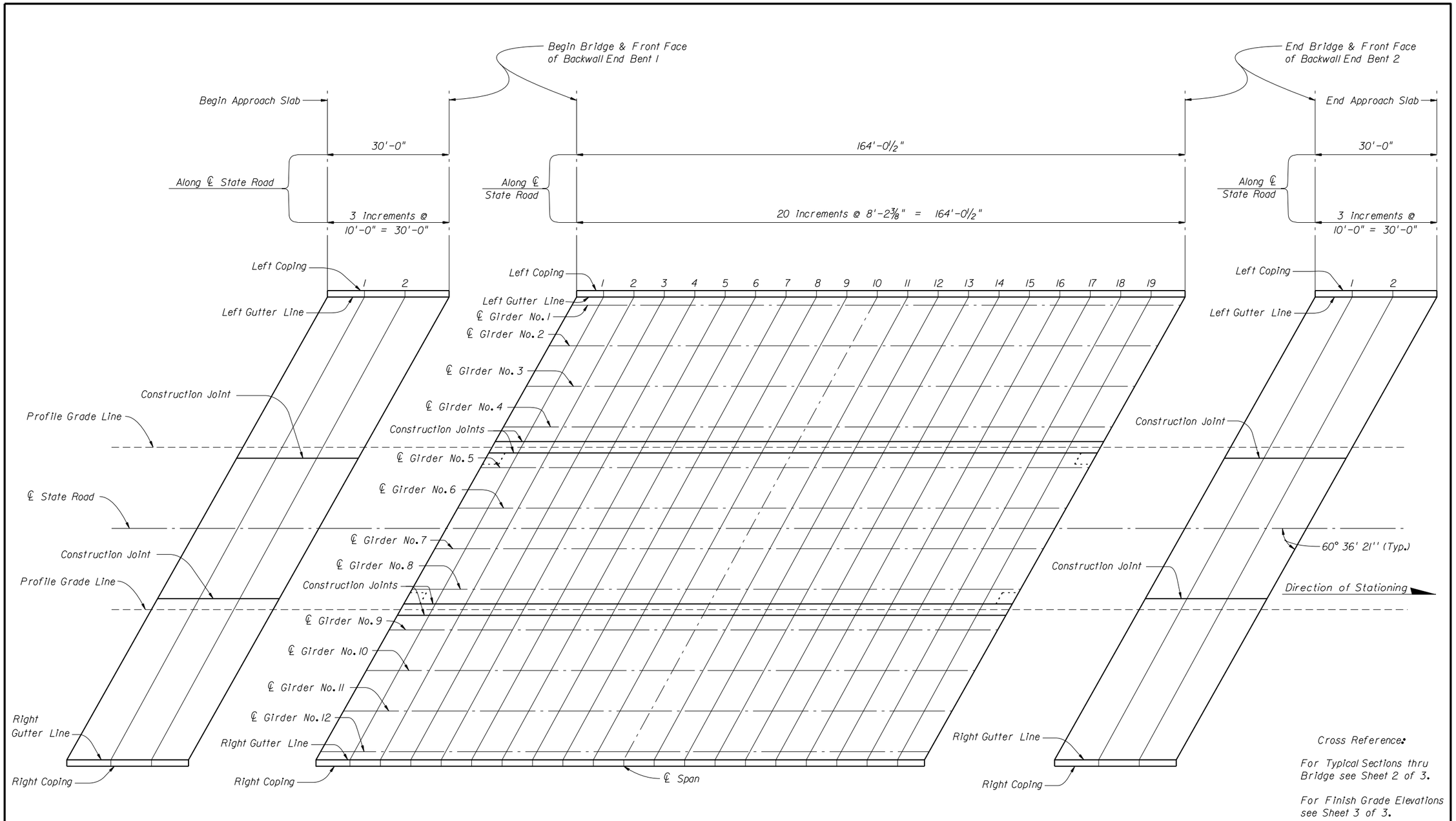

Cross Reference:

For Typical Sections thru Bridge see Sheet 2 of 3.

For Finish Grade Elevations see Sheet 3 of 3.

BRIDGE NO. XXXXXX

REVISIONS					
DATE	BY	DESCRIPTION	DATE	BY	DESCRIPTION

STRUCTURES DESIGN OFFICE
CENTRAL OFFICE
605 Suwannee Street, MS 33
Tallahassee, Florida 32399-0450

DRAWN BY: XXX MM-YY
CHECKED BY: XXX MM-YY
DESIGNED BY: XXX MM-YY
CHECKED BY: XXX MM-YY

STATE OF FLORIDA
DEPARTMENT OF TRANSPORTATION

ROAD NO.	COUNTY	FINANCIAL PROJECT ID

SHEET TITLE: FINISH GRADE ELEVATIONS EXAMPLE 2 SKEWED T-LINES (SHEET 1 OF 3)

PROJECT NAME:

REF. DWG. NO.

SHEET NO.

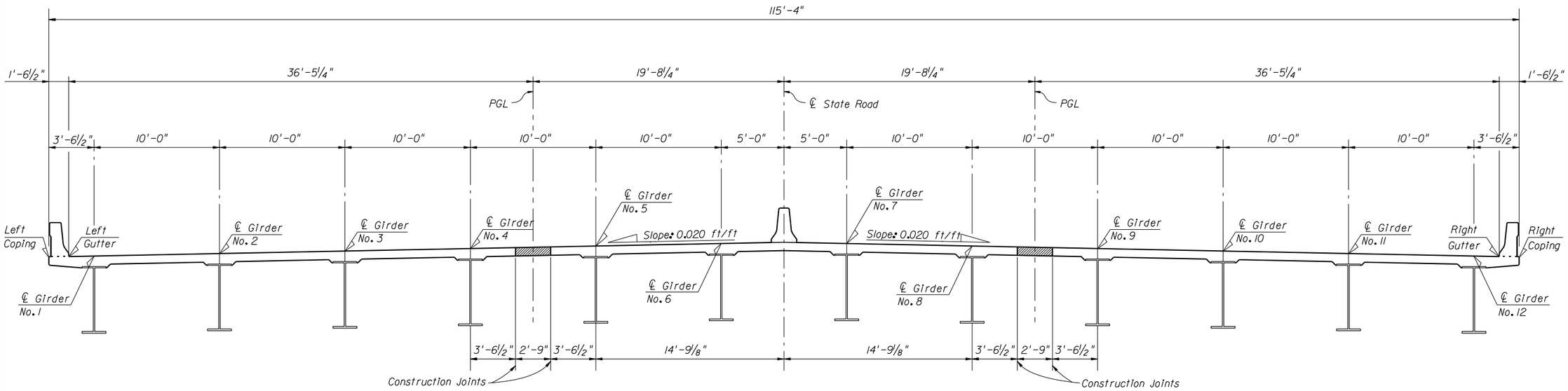

TYPICAL SECTION THRU SUPERSTRUCTURE

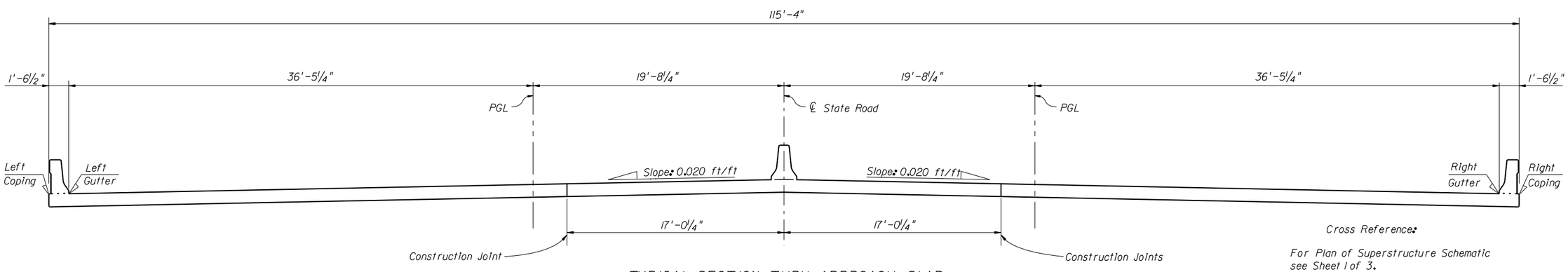

TYPICAL SECTION THRU APPROACH SLAB

Cross Reference:

For Plan of Superstructure Schematic see Sheet 1 of 3.

For Finish Grade Elevations see Sheet 3 of 3.

BRIDGE NO. XXXXXX

REVISIONS					
DATE	BY	DESCRIPTION	DATE	BY	DESCRIPTION

STRUCTURES DESIGN OFFICE
CENTRAL OFFICE
605 Suwannee Street, MS 33
Tallahassee, Florida 32399-0450

DRAWN BY: XXX MM-YY
CHECKED BY: XXX MM-YY
DESIGNED BY: XXX MM-YY
CHECKED BY: XXX MM-YY

STATE OF FLORIDA
DEPARTMENT OF TRANSPORTATION

ROAD NO.	COUNTY	FINANCIAL PROJECT ID

SHEET TITLE: FINISH GRADE ELEVATIONS EXAMPLE 2 SKEWED T-LINES (SHEET 2 OF 3)

PROJECT NAME:

REF. DWG. NO.

SHEET NO.

SPAN NO. 1

LOCATION \ T-LINES & BENTS	BEGIN BRIDGE	1	2	3	4	5	6	7	8	9	10	11	12	13	14	15	16	17	18	19	END BRIDGE
LEFT COPING	119.951	119.816	119.682	119.544	119.403	119.262	119.121	118.976	118.829	118.681	118.533	118.383	118.228	118.074	117.917	117.759	117.602	117.438	117.277	117.113	116.946
LEFT GUTTER	119.984	119.849	119.711	119.573	119.436	119.295	119.150	119.006	118.862	118.714	118.563	118.412	118.261	118.107	117.949	117.792	117.631	117.470	117.306	117.142	116.975
CENTERLINE GIRDER NO. 1	120.043	119.908	119.774	119.636	119.495	119.354	119.213	119.068	118.924	118.776	118.625	118.474	118.323	118.169	118.012	117.854	117.697	117.536	117.372	117.208	117.041
CENTERLINE GIRDER NO. 2	120.338	120.207	120.072	119.934	119.797	119.659	119.518	119.373	119.229	119.085	118.934	118.786	118.635	118.481	118.327	118.169	118.012	117.854	117.690	117.530	117.362
CENTERLINE GIRDER NO. 3	120.633	120.502	120.367	120.233	120.098	119.961	119.820	119.678	119.534	119.390	119.242	119.094	118.944	118.793	118.638	118.484	118.327	118.169	118.009	117.848	117.684
CENTERLINE GIRDER NO. 4	120.928	120.797	120.666	120.531	120.397	120.259	120.121	119.980	119.839	119.695	119.551	119.403	119.255	119.104	118.953	118.799	118.642	118.484	118.327	118.166	118.005
CONSTRUCTION JOINT	121.033	120.906	120.774	120.640	120.505	120.367	120.230	120.092	119.948	119.806	119.662	119.514	119.367	119.216	119.065	118.911	118.757	118.599	118.442	118.281	118.120
PROFILE GRADE LINE	121.076	120.945	120.814	120.682	120.548	120.410	120.272	120.135	119.990	119.849	119.705	119.557	119.409	119.259	119.108	118.953	118.799	118.645	118.484	118.327	118.163
CONSTRUCTION JOINT	121.115	120.988	120.856	120.722	120.587	120.453	120.315	120.174	120.033	119.892	119.747	119.600	119.452	119.301	119.150	118.999	118.845	118.688	118.530	118.369	118.209
CENTERLINE GIRDER NO. 5	121.220	121.093	120.961	120.830	120.696	120.561	120.423	120.285	120.144	120.000	119.856	119.711	119.564	119.413	119.265	119.111	118.957	118.799	118.642	118.484	118.323
CENTERLINE GIRDER NO. 6	121.516	121.388	121.257	121.125	120.994	120.860	120.722	120.584	120.446	120.305	120.161	120.016	119.872	119.724	119.573	119.423	119.268	119.114	118.957	118.799	118.642
CENTERLINE STATE ROAD	121.660	121.532	121.404	121.273	121.142	121.007	120.873	120.735	120.597	120.456	120.315	120.171	120.026	119.879	119.728	119.577	119.426	119.272	119.117	118.957	118.799
CENTERLINE GIRDER NO. 7	121.608	121.483	121.355	121.224	121.093	120.961	120.827	120.689	120.551	120.410	120.269	120.125	119.980	119.836	119.685	119.537	119.383	119.232	119.075	118.921	118.760
CENTERLINE GIRDER NO. 8	121.506	121.381	121.253	121.125	120.994	120.863	120.728	120.594	120.456	120.318	120.177	120.036	119.895	119.747	119.600	119.452	119.301	119.150	118.996	118.839	118.684
CONSTRUCTION JOINT	121.470	121.345	121.217	121.089	120.961	120.827	120.696	120.561	120.423	120.285	120.148	120.003	119.862	119.718	119.570	119.423	119.272	119.121	118.967	118.812	118.655
PROFILE GRADE LINE	121.453	121.329	121.204	121.076	120.945	120.814	120.682	120.548	120.410	120.272	120.135	119.993	119.849	119.705	119.557	119.409	119.259	119.108	118.957	118.799	118.645
CONSTRUCTION JOINT	121.440	121.316	121.188	121.063	120.932	120.801	120.669	120.535	120.397	120.259	120.121	119.980	119.836	119.692	119.547	119.396	119.249	119.098	118.944	118.789	118.632
CENTERLINE GIRDER NO. 9	121.401	121.280	121.152	121.027	120.896	120.768	120.633	120.499	120.364	120.226	120.089	119.948	119.803	119.659	119.514	119.367	119.219	119.068	118.914	118.760	118.606
CENTERLINE GIRDER NO. 10	121.296	121.175	121.050	120.925	120.797	120.666	120.538	120.404	120.269	120.135	119.997	119.856	119.715	119.573	119.426	119.281	119.134	118.983	118.832	118.678	118.524
CENTERLINE GIRDER NO. 11	121.191	121.070	120.948	120.823	120.696	120.568	120.436	120.305	120.174	120.039	119.902	119.764	119.623	119.482	119.341	119.193	119.049	118.898	118.750	118.599	118.445
CENTERLINE GIRDER NO. 12	121.086	120.965	120.843	120.719	120.594	120.466	120.338	120.210	120.075	119.944	119.806	119.672	119.534	119.393	119.249	119.108	118.960	118.816	118.665	118.514	118.363
RIGHT GUTTER	121.063	120.945	120.820	120.699	120.574	120.446	120.318	120.187	120.056	119.925	119.790	119.652	119.514	119.373	119.232	119.088	118.944	118.796	118.648	118.497	118.346
RIGHT COPING	121.033	120.912	120.791	120.666	120.541	120.417	120.289	120.157	120.026	119.892	119.757	119.623	119.482	119.344	119.199	119.058	118.914	118.766	118.615	118.468	118.314

APPROACH SLAB NO. 1

LOCATION \ T-LINES & BENTS	BEGIN APP.SLAB	1	2	BEGIN BRIDGE
LEFT COPING	120.472	120.302	120.128	119.951
LEFT GUTTER	120.502	120.331	120.157	119.984
PROFILE GRADE LINE	121.578	121.414	121.247	121.076
CONSTRUCTION JOINT	121.654	121.490	121.325	121.155
CENTERLINE STATE ROAD	122.152	121.991	121.827	121.660
CONSTRUCTION JOINT	121.965	121.808	121.647	121.483
PROFILE GRADE LINE	121.936	121.778	121.617	121.453
RIGHT GUTTER	121.526	121.375	121.220	121.063
RIGHT COPING	121.493	121.342	121.188	121.033

APPROACH SLAB NO. 2

LOCATION \ T-LINES & BENTS	END BRIDGE	1	2	END APP.SLAB
LEFT COPING	116.946	116.722	116.493	116.263
LEFT GUTTER	116.975	116.752	116.526	116.296
PROFILE GRADE LINE	118.163	117.946	117.723	117.500
CONSTRUCTION JOINT	118.248	118.031	117.812	117.589
CENTERLINE STATE ROAD	118.799	118.586	118.366	118.146
CONSTRUCTION JOINT	118.665	118.455	118.238	118.022
PROFILE GRADE LINE	118.645	118.432	118.219	118.002
RIGHT GUTTER	118.346	118.140	117.933	117.723
RIGHT COPING	118.314	118.110	117.904	117.690

Cross Reference:

For locations of Elevations
see Sheets 1 of 3 and 2 of 3.

BRIDGE NO. XXXXXX

REVISIONS					
DATE	BY	DESCRIPTION	DATE	BY	DESCRIPTION

STRUCTURES DESIGN OFFICE
CENTRAL OFFICE
605 Suwannee Street, MS 33
Tallahassee, Florida 32399-0450

DRAWN BY: XXX MM-YY
CHECKED BY: XXX MM-YY
DESIGNED BY: XXX MM-YY
CHECKED BY: XXX MM-YY

STATE OF FLORIDA
DEPARTMENT OF TRANSPORTATION

ROAD NO.	COUNTY	FINANCIAL PROJECT ID

SHEET TITLE: FINISH GRADE ELEVATIONS EXAMPLE 2 SKEWED T-LINES (SHEET 3 OF 3)

PROJECT NAME:

REF. DWG. NO.

SHEET NO.

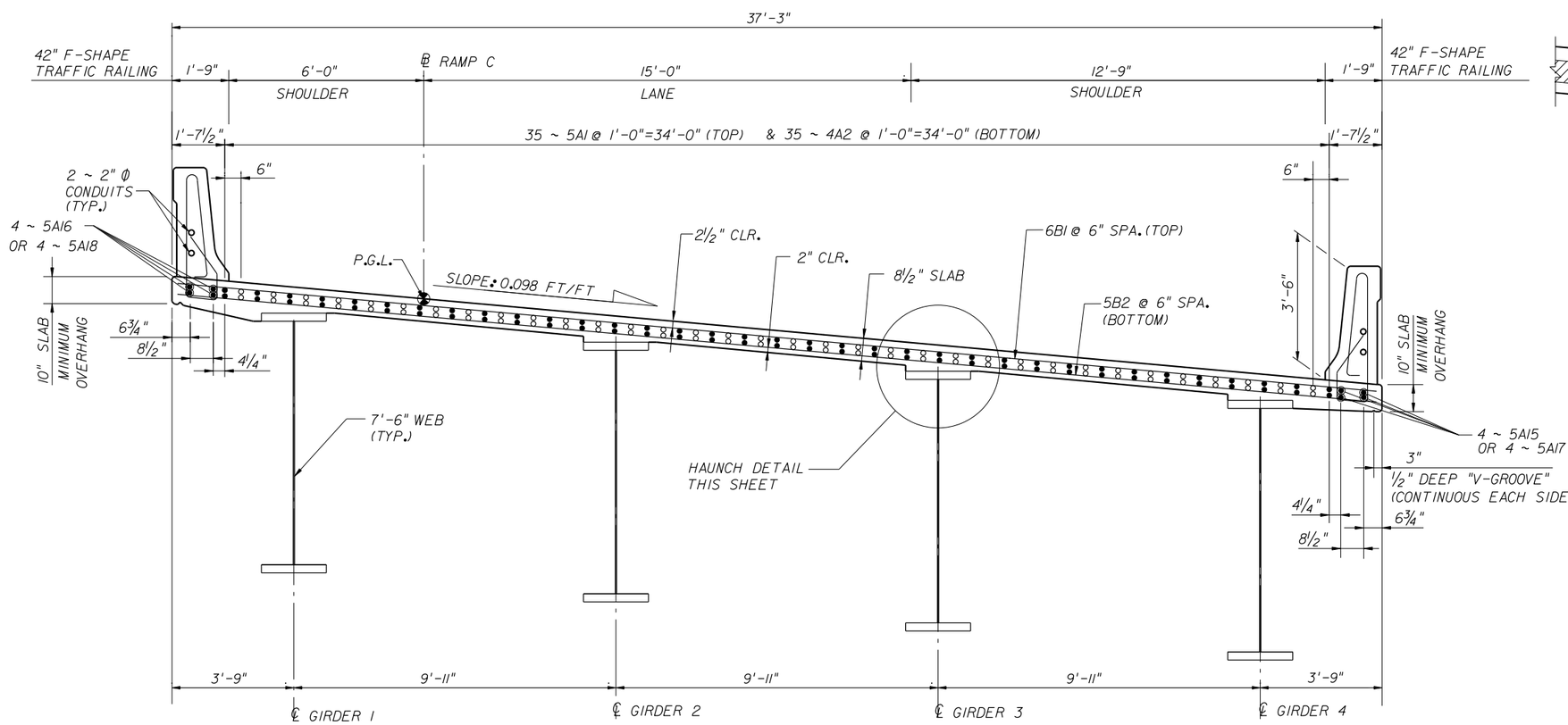

SUPERSTRUCTURE CROSS-SECTION
(BARS 6B3 NOT SHOWN)

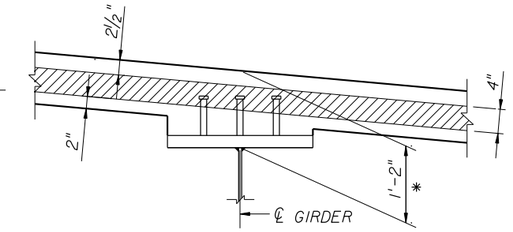

HAUNCH DETAIL

NOTES: (HAUNCH)

A) THE SHEAR CONNECTOR STUD HEAD MUST BE LOCATED WITHIN THE CROSS HATCHED REGION.

B) (*) DIMENSION SHOWN IS MEASURED FROM THE TOP OF THE WEB PLATE TO THE TOP OF THE SLAB AT THE CENTERLINE OF THE GIRDER. THE DIMENSION MAY BE VARIED AS REQUIRED TO PROVIDE FOR ANY VARIATION IN CAMBER FROM THAT CALCULATED (SEE SHEETS X-XX & X-XX) EXCEPT THAT NO PORTION OF THE GIRDER FLANGE MAY FALL WITHIN 8" OF THE TOP OF THE SLAB.

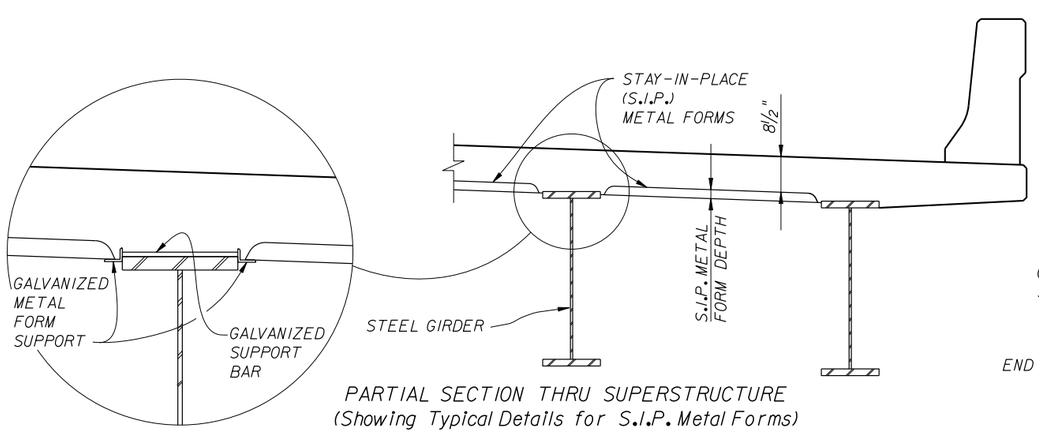

PARTIAL SECTION THRU SUPERSTRUCTURE
(Showing Typical Details for S.I.P. Metal Forms)

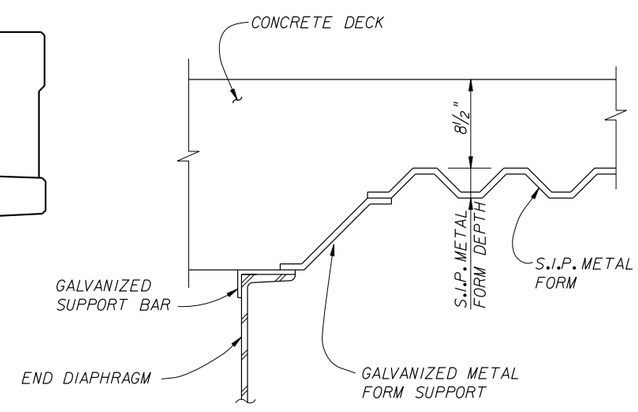

PARTIAL SECTION THRU END OF SPAN

STAY-IN-PLACE METAL FORM DETAILS

BRIDGE NO. XXXXXX

REVISIONS					
DATE	BY	DESCRIPTION	DATE	BY	DESCRIPTION

STRUCTURES DESIGN OFFICE
CENTRAL OFFICE
605 Suwannee Street, MS 33
Tallahassee, Florida 32399-0450

DRAWN BY: XXX MM-YY
CHECKED BY: XXX MM-YY
DESIGNED BY: XXX MM-YY
CHECKED BY: XXX MM-YY

STATE OF FLORIDA
DEPARTMENT OF TRANSPORTATION

ROAD NO.	COUNTY	FINANCIAL PROJECT ID

SHEET TITLE: SUPERSTRUCTURE DETAILS EXAMPLE 1
SUPERSTRUCTURE SECTION - STEEL I-GIRDER

PROJECT NAME:

REF. DWG. NO.

SHEET NO.

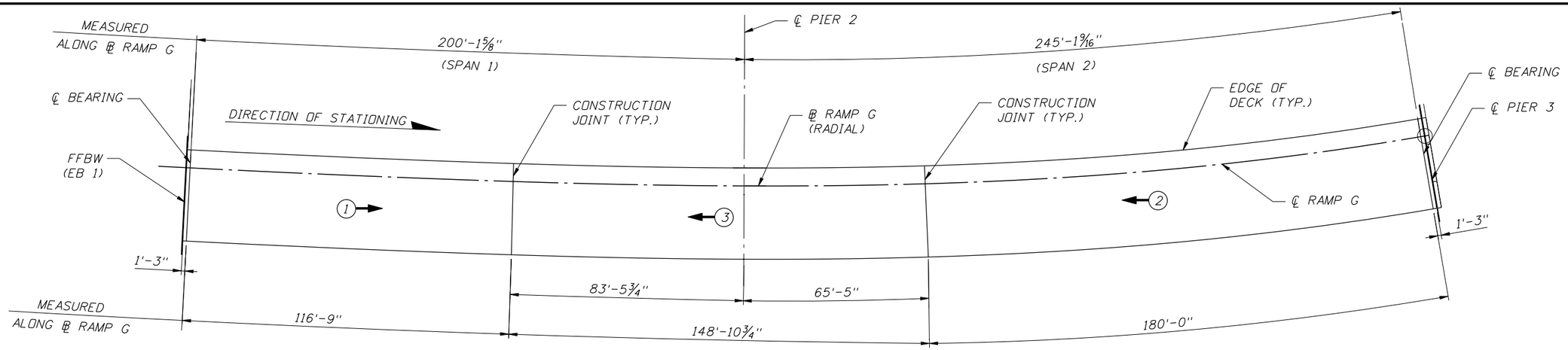

POURING SEQUENCE - UNIT 1 (SPANS 1 THRU 2)

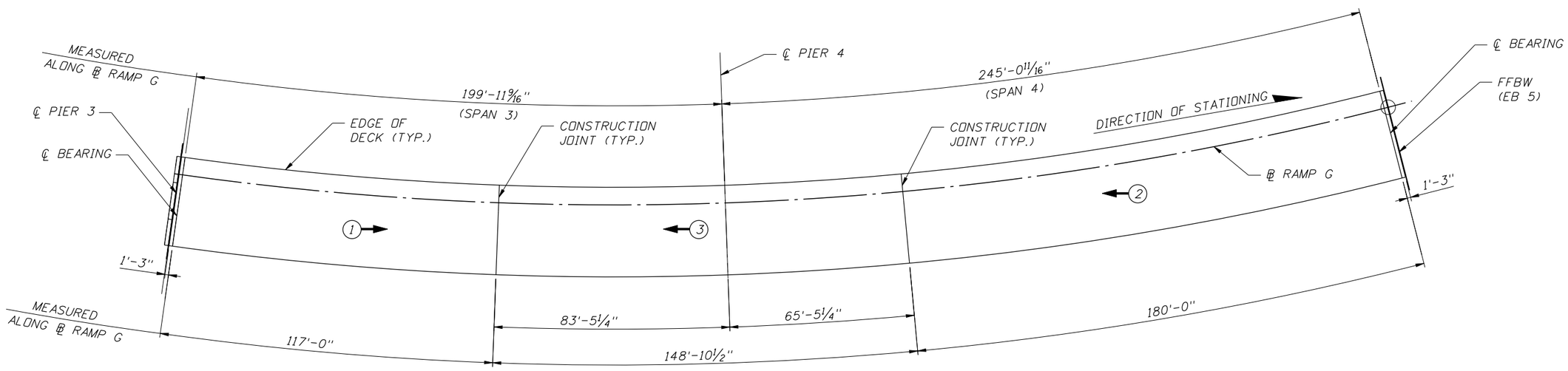

POURING SEQUENCE - UNIT 2 (SPANS 3 THRU 4)
A MINIMUM OF 72 HOURS IS REQUIRED BETWEEN ADJACENT POURS.

LEGEND:

(2) POUR SEQUENCE AND DIRECTION

ESTIMATED QUANTITIES		UNIT 1			UNIT 2		
ITEM	UNIT	POUR 1	POUR 2	POUR 3	POUR 1	POUR 2	POUR 3
CLASS II CONCRETE (SUPERSTRUCTURE)	CY	111.4	171.4	141.9	111.4	171.4	141.9
REINFORCING STEEL (SUPERSTRUCTURE)	LB	87,070			87,070		
CONCRETE TRAFFIC RAILING, BRIDGE (32" F-SHAPE)	LF	892			892		
BRIDGE DECK GROOVING & PLANING	SY	3,270					

NOTE:
A MINIMUM OF 72 HOURS IS REQUIRED BETWEEN POURS IN A GIVEN CONTINUOUS UNIT.

BRIDGE NO. XXXXXX

REVISIONS					
DATE	BY	DESCRIPTION	DATE	BY	DESCRIPTION

STRUCTURES DESIGN OFFICE
CENTRAL OFFICE
605 Suwannee Street, MS 33
Tallahassee, Florida 32399-0450

DRAWN BY: XXX MM-YY
CHECKED BY: XXX MM-YY
DESIGNED BY: XXX MM-YY
CHECKED BY: XXX MM-YY

STATE OF FLORIDA
DEPARTMENT OF TRANSPORTATION

ROAD NO.	COUNTY	FINANCIAL PROJECT ID

SHEET TITLE: SUPERSTRUCTURE DETAILS EXAMPLE 2
POURING SEQUENCE

PROJECT NAME:

REF. DWG. NO.

SHEET NO.

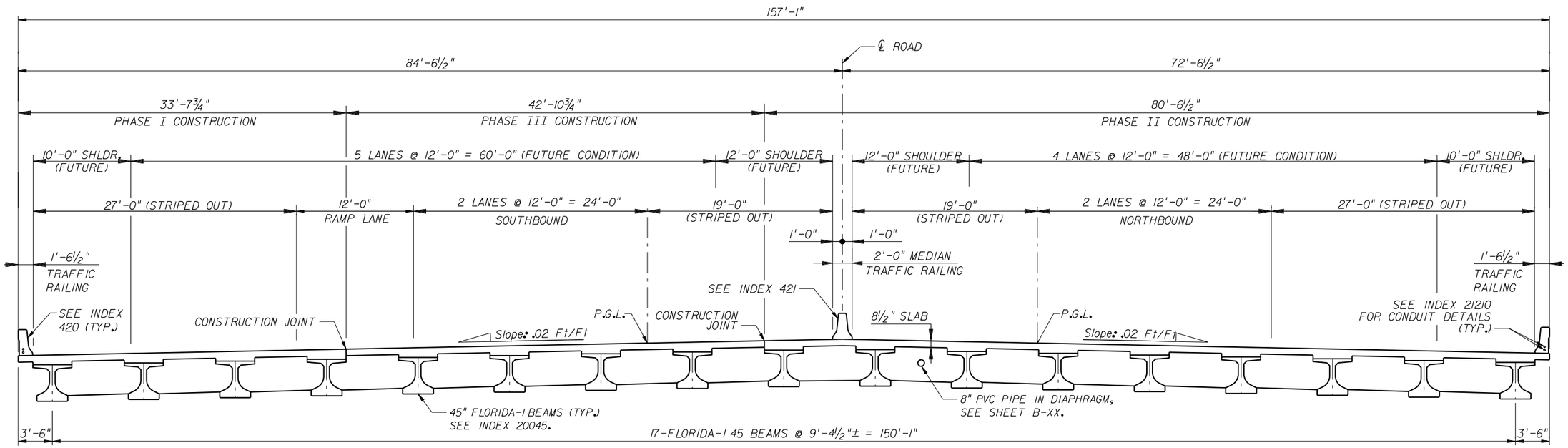

TYPICAL SUPERSTRUCTURE SECTION

BRIDGE NO. XXXXXX

REVISIONS					
DATE	BY	DESCRIPTION	DATE	BY	DESCRIPTION

STRUCTURES DESIGN OFFICE
CENTRAL OFFICE
605 Suwannee Street, MS 33
Tallahassee, Florida 32399-0450

DRAWN BY: XXX MM-YY
CHECKED BY: XXX MM-YY
DESIGNED BY: XXX MM-YY
CHECKED BY: XXX MM-YY

STATE OF FLORIDA
DEPARTMENT OF TRANSPORTATION

ROAD NO.	COUNTY	FINANCIAL PROJECT ID

SHEET TITLE: TYPICAL SECTION - EXAMPLE 1 PRESTRESSED CONCRETE BEAM SUPERSTRUCTURE

PROJECT NAME:

REF. DWG. NO.

SHEET NO.

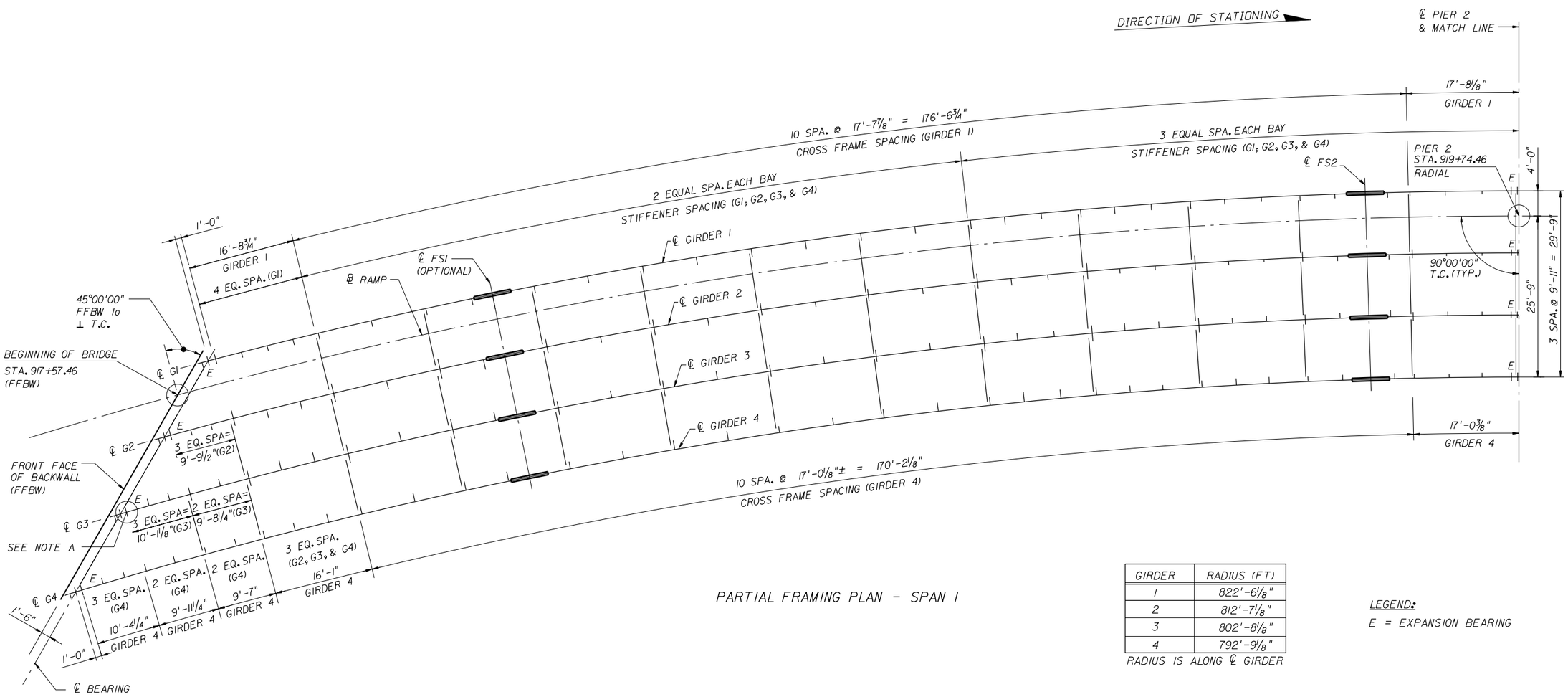

PARTIAL FRAMING PLAN - SPAN 1

GIRDER	RADIUS (FT)
1	822'-6 1/8"
2	812'-7 1/8"
3	802'-8 1/8"
4	792'-9 1/8"

RADIUS IS ALONG ℄ GIRDER

LEGEND:

E = EXPANSION BEARING

NOTE A:

ALL INTERMEDIATE CROSS FRAME GUSSET PLATES ADJACENT TO BEARING STIFFENERS AT END BENTS SHALL UTILIZE 15/16" X 4" SLOTTED HOLES TO ACCOUNT FOR DIFFERENTIAL GIRDER DEFLECTION. BOLTS AT SLOTTED HOLES SHALL NOT BE TIGHTENED UNTIL DECK POUR IS COMPLETED (6 LOCATIONS TOTAL, 3 PER END BENT). CONNECTION PLATES WITH SLOTTED HOLES SHALL BE DETAILED ON THE STRUCTURAL STEEL SHOP DRAWINGS.

NOTES:

1. CROSS FRAME SPACING IS MEASURED ALONG ℄ GIRDER.
2. FS = FIELD SPLICE.
3. TRANSVERSE INTERMEDIATE STIFFENERS SHALL BE PLACED AT EQUAL SPACES AS SHOWN.
4. ADJUST STIFFENERS TO CLEAR SPLICE PLATES AS REQUIRED.
5. ALL INTERMEDIATE CROSSFRAMES SHALL BE RADIAL TO THE ℄ GIRDERS.
6. SEE GIRDER ELEVATION FOR LOCATION OF FLANGE STIFFENER PLATES
7. CHARPY V-NOTCH IMPACT TEST IS REQUIRED FOR ALL WEB PLATES AND FLANGE PLATES OF THE GIRDERS (INCLUDING FIELD SPLICE PLATES).

BRIDGE NO. XXXXXX

REVISIONS					
DATE	BY	DESCRIPTION	DATE	BY	DESCRIPTION

STRUCTURES DESIGN OFFICE
CENTRAL OFFICE
605 Suwannee Street, MS 33
Tallahassee, Florida 32399-0450

DRAWN BY: XXX MM-YY
CHECKED BY: XXX MM-YY
DESIGNED BY: XXX MM-YY
CHECKED BY: XXX MM-YY

STATE OF FLORIDA
DEPARTMENT OF TRANSPORTATION

ROAD NO.	COUNTY	FINANCIAL PROJECT ID

SHEET TITLE: FRAMING PLAN EXAMPLE 1
CURVED STEEL I-GIRDER SUPERSTRUCTURE (SHEET 1 OF 5)

PROJECT NAME:

REF. DWG. NO.

SHEET NO.

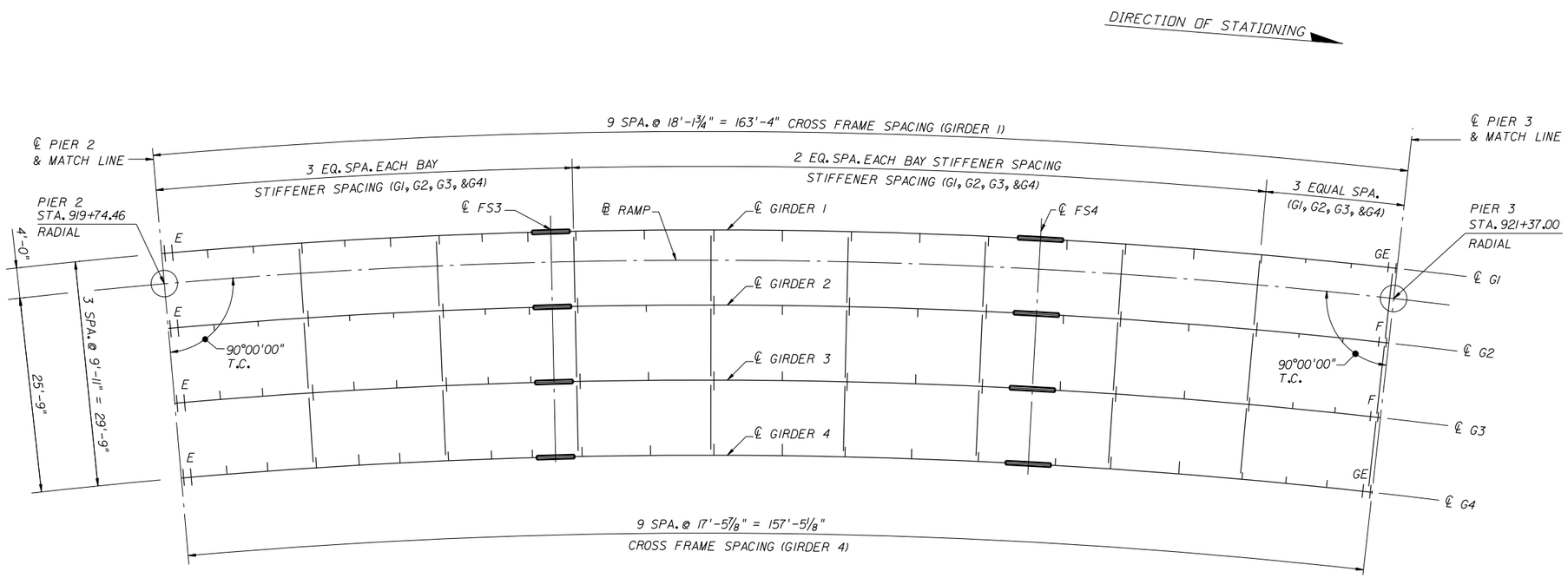

PARTIAL FRAMING PLAN - SPAN 2

GIRDER	RADIUS (FT)
1	822'-6⅛"
2	812'-7⅛"
3	802'-8⅛"
4	792'-9⅛"

RADIUS IS ALONG ℄ GIRDER

NOTES:

1. CROSS FRAME SPACING IS MEASURED ALONG ℄ GIRDER.
2. FS = FIELD SPLICE.
3. TRANSVERSE INTERMEDIATE STIFFENERS SHALL BE PLACED AT EQUAL SPACES AS SHOWN.
4. ADJUST STIFFENERS TO CLEAR SPLICE PLATES AS REQUIRED.
5. ALL INTERMEDIATE CROSSFRAMES SHALL BE RADIAL TO THE ℄ GIRDERS.
6. SEE GIRDER ELEVATION FOR LOCATION OF FLANGE STIFFENER PLATES

LEGEND:

E = EXPANSION BEARING
F = FIXED BEARING
GE = GUIDED EXPANSION BEARING

BRIDGE NO. XXXXXX

REVISIONS					
DATE	BY	DESCRIPTION	DATE	BY	DESCRIPTION

STRUCTURES DESIGN OFFICE
CENTRAL OFFICE
605 Suwannee Street, MS 33
Tallahassee, Florida 32399-0450

DRAWN BY: XXX MM-YY
CHECKED BY: XXX MM-YY
DESIGNED BY: XXX MM-YY
CHECKED BY: XXX MM-YY

STATE OF FLORIDA
DEPARTMENT OF TRANSPORTATION

ROAD NO.	COUNTY	FINANCIAL PROJECT ID

SHEET TITLE: FRAMING PLAN EXAMPLE 1
CURVED STEEL I-GIRDER SUPERSTRUCTURE (SHEET 2 OF 5)

PROJECT NAME:

REF. DWG. NO.

SHEET NO.

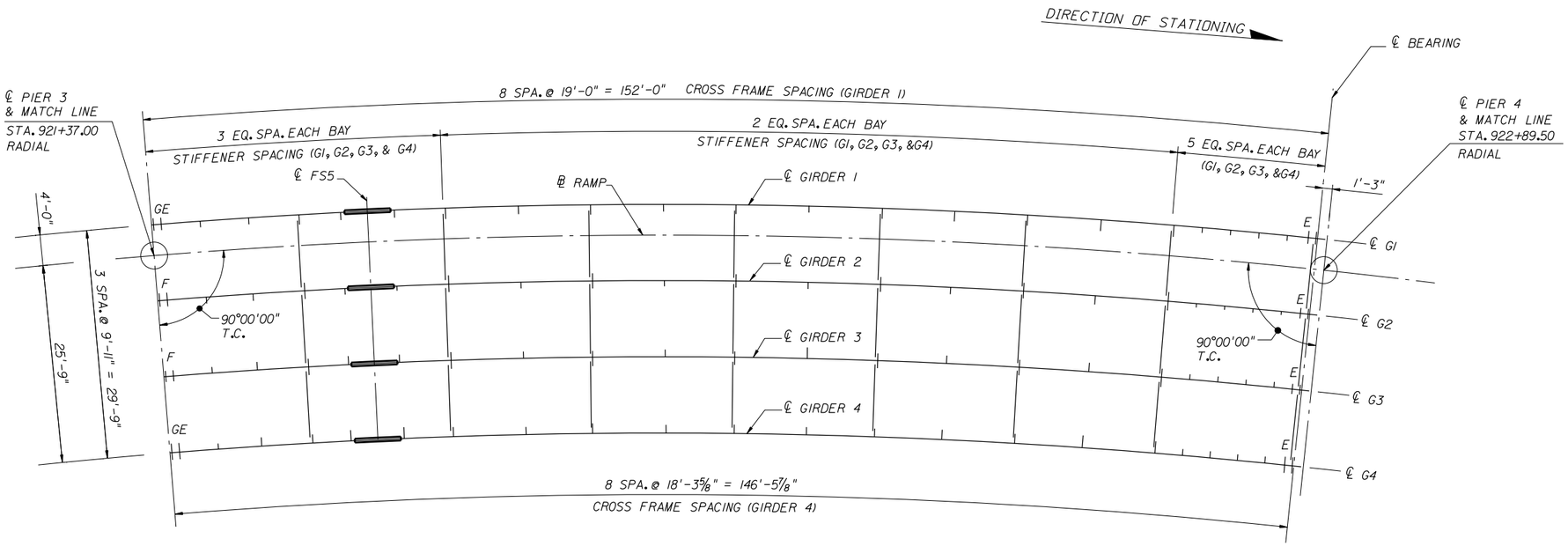

PARTIAL FRAMING PLAN - SPAN 3

GIRDER	RADIUS (FT)
1	822'-6⅛"
2	812'-7⅛"
3	802'-8⅛"
4	792'-9⅛"

RADIUS IS ALONG ℄ GIRDER

NOTES:

1. CROSS FRAME SPACING IS MEASURED ALONG ℄ GIRDER.
2. FS = FIELD SPLICE.
3. TRANSVERSE INTERMEDIATE STIFFENERS SHALL BE PLACED AT EQUAL SPACES AS SHOWN.
4. ADJUST STIFFENERS TO CLEAR SPLICE PLATES AS REQUIRED.
5. ALL INTERMEDIATE CROSSFRAMES SHALL BE RADIAL TO THE ℄ GIRDERS.
6. SEE GIRDER ELEVATION FOR LOCATION OF FLANGE STIFFENER PLATES

LEGEND:

E = EXPANSION BEARING
F = FIXED BEARING
GE = GUIDED EXPANSION BEARING

BRIDGE NO. XXXXXX

REVISIONS					
DATE	BY	DESCRIPTION	DATE	BY	DESCRIPTION

STRUCTURES DESIGN OFFICE
CENTRAL OFFICE
605 Suwannee Street, MS 33
Tallahassee, Florida 32399-0450

DRAWN BY: XXX MM-YY
CHECKED BY: XXX MM-YY
DESIGNED BY: XXX MM-YY
CHECKED BY: XXX MM-YY

STATE OF FLORIDA
DEPARTMENT OF TRANSPORTATION

ROAD NO.	COUNTY	FINANCIAL PROJECT ID

SHEET TITLE: FRAMING PLAN EXAMPLE 1
CURVED STEEL I-GIRDER SUPERSTRUCTURE (SHEET 3 OF 5)

PROJECT NAME:

REF. DWG. NO.

SHEET NO.

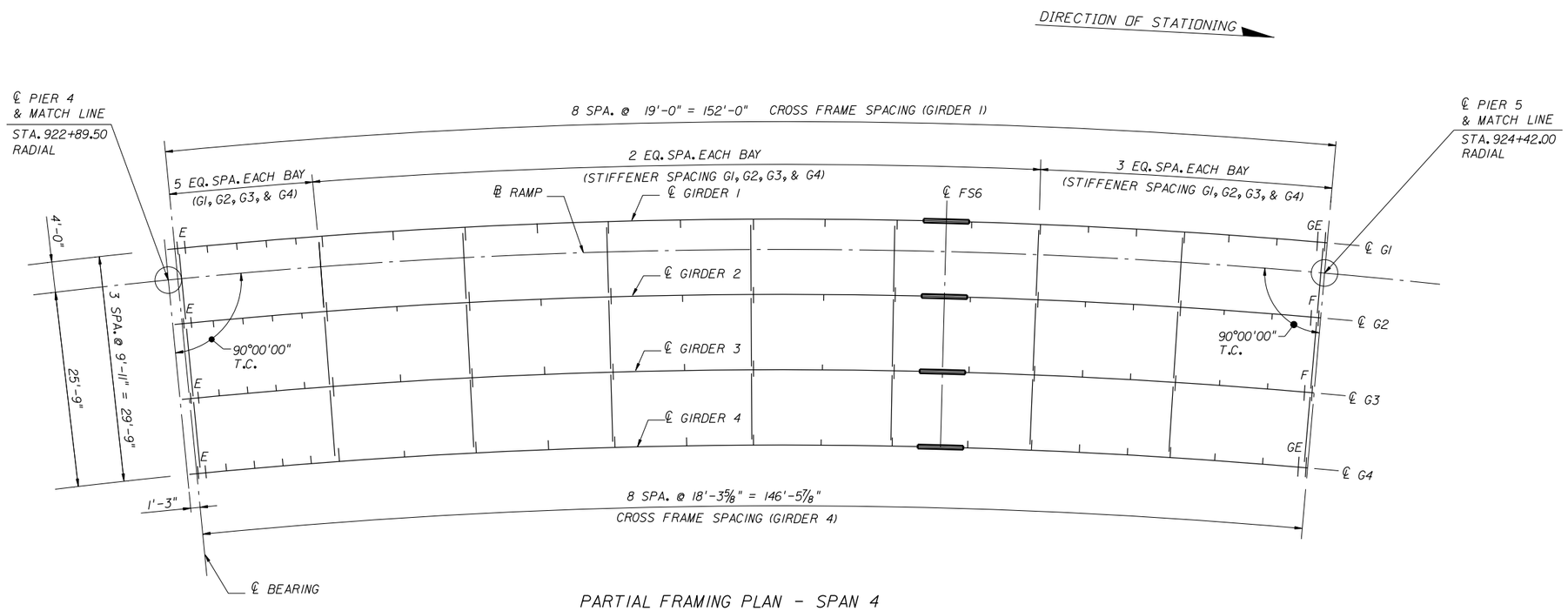

PARTIAL FRAMING PLAN - SPAN 4

GIRDER	RADIUS (FT)
1	822'-6 1/8"
2	812'-7 1/8"
3	802'-8 1/8"
4	792'-9 1/8"

RADIUS IS ALONG ℄ GIRDER

NOTES:

1. CROSS FRAME SPACING IS MEASURED ALONG ℄ GIRDER.
2. FS = FIELD SPLICE.
3. TRANSVERSE INTERMEDIATE STIFFENERS SHALL BE PLACED AT EQUAL SPACES AS SHOWN.
4. ADJUST STIFFENERS TO CLEAR SPLICE PLATES AS REQUIRED.
5. ALL INTERMEDIATE CROSSFRAMES SHALL BE RADIAL TO THE ℄ GIRDERS.
6. SEE GIRDER ELEVATION FOR LOCATION OF FLANGE STIFFENER PLATES

LEGEND:

E = EXPANSION BEARING
F = FIXED BEARING
GE = GUIDED EXPANSION BEARING

BRIDGE NO. XXXXXX

REVISIONS					
DATE	BY	DESCRIPTION	DATE	BY	DESCRIPTION

STRUCTURES DESIGN OFFICE
CENTRAL OFFICE
605 Suwannee Street, MS 33
Tallahassee, Florida 32399-0450

DRAWN BY: XXX MM-YY
CHECKED BY: XXX MM-YY
DESIGNED BY: XXX MM-YY
CHECKED BY: XXX MM-YY

STATE OF FLORIDA
DEPARTMENT OF TRANSPORTATION

ROAD NO.	COUNTY	FINANCIAL PROJECT ID

SHEET TITLE: FRAMING PLAN EXAMPLE 1
CURVED STEEL I-GIRDER SUPERSTRUCTURE (SHEET 4 OF 5)

PROJECT NAME:

REF. DWG. NO.

SHEET NO.

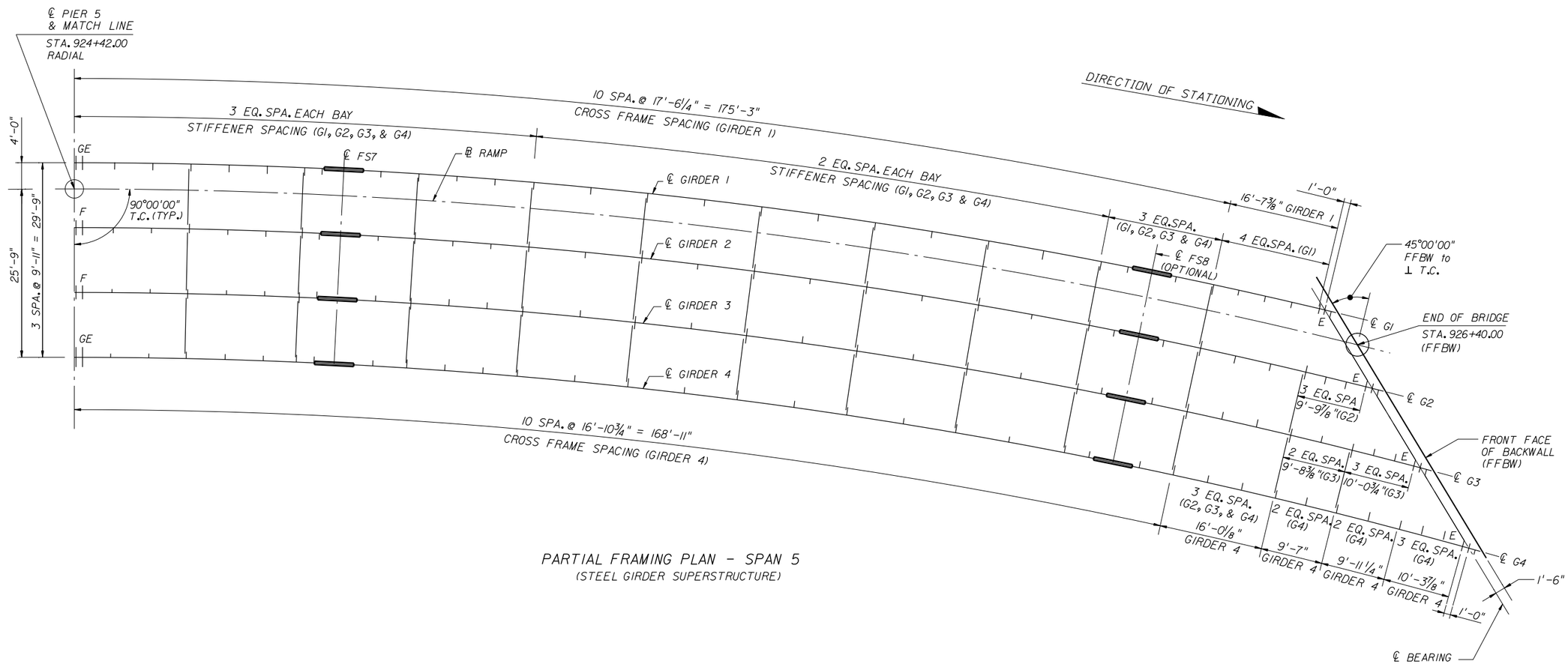

PARTIAL FRAMING PLAN - SPAN 5
(STEEL GIRDER SUPERSTRUCTURE)

GIRDER	RADIUS (FT)
1	822'-6 1/8"
2	812'-7 1/8"
3	802'-8 1/8"
4	792'-9 1/8"

RADIUS IS ALONG ℄ GIRDER

LEGEND:

E = EXPANSION BEARING
F = FIXED BEARING
GE = GUIDED EXPANSION BEARING

NOTES:

1. CROSS FRAME SPACING IS MEASURED ALONG ℄ GIRDER.
2. FS = FIELD SPLICE.
3. TRANSVERSE INTERMEDIATE STIFFENERS SHALL BE PLACED AT EQUAL SPACES AS SHOWN.
4. ADJUST STIFFENERS TO CLEAR SPLICE PLATES AS REQUIRED.
5. ALL INTERMEDIATE CROSSFRAMES SHALL BE RADIAL TO THE ℄ GIRDERS.
6. SEE GIRDER ELEVATION FOR LOCATION OF FLANGE STIFFENER PLATES
7. SEE NOTE A, SHEET 1 OF 5 REGARDING INTERMEDIATE CROSS FRAME GUSSET PLATE AT END BENTS.

BRIDGE NO. XXXXXX

REVISIONS					
DATE	BY	DESCRIPTION	DATE	BY	DESCRIPTION

STRUCTURES DESIGN OFFICE
CENTRAL OFFICE
605 Suwannee Street, MS 33
Tallahassee, Florida 32399-0450

DRAWN BY: XXX MM-YY
CHECKED BY: XXX MM-YY
DESIGNED BY: XXX MM-YY
CHECKED BY: XXX MM-YY

STATE OF FLORIDA
DEPARTMENT OF TRANSPORTATION

ROAD NO.	COUNTY	FINANCIAL PROJECT ID

SHEET TITLE: FRAMING PLAN EXAMPLE 1
CURVED STEEL I-GIRDER SUPERSTRUCTURE (SHEET 5 OF 5)

PROJECT NAME:

REF. DWG. NO.

SHEET NO.

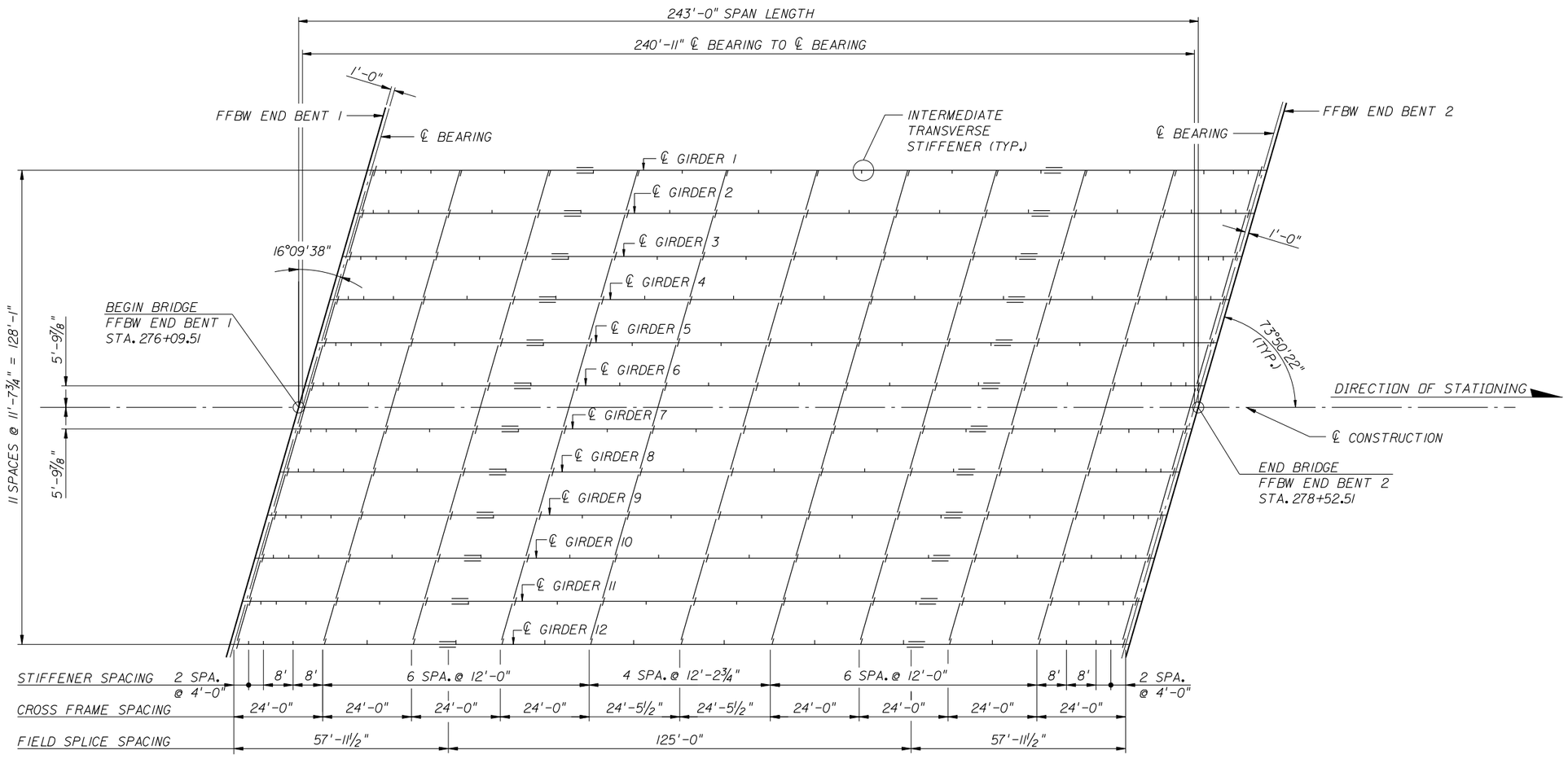

FRAMING PLAN

NOTES:

1. CONNECTION AND STIFFENER PLATES SHALL BE LOCATED ON THE INTERIOR FACE OF THE EXTERIOR GIRDER WEBS AND LOCATED ON THE INTERIOR GIRDER WEBS AS SHOWN.

2. ALL LONGITUDINAL DIMENSIONS ARE ALONG ℄ GIRDER, UNLESS NOTED OTHERWISE.

3. ENDS OF GIRDERS, STIFFENER PLATES, BEARING STIFFENERS AND CONNECTION PLATES SHALL BE NORMAL TO THE BOTTOM FLANGE UPON COMPLETION OF CONSTRUCTION.

4. FOR FIELD SPLICE DETAILS, SEE FIELD SPLICE DETAIL SHEET.

BRIDGE NO. XXXXXX

REVISIONS					
DATE	BY	DESCRIPTION	DATE	BY	DESCRIPTION

STRUCTURES DESIGN OFFICE
CENTRAL OFFICE
605 Suwannee Street, MS 33
Tallahassee, Florida 32399-0450

DRAWN BY: XXX MM-YY
CHECKED BY: XXX MM-YY
DESIGNED BY: XXX MM-YY
CHECKED BY: XXX MM-YY

STATE OF FLORIDA
DEPARTMENT OF TRANSPORTATION

ROAD NO.	COUNTY	FINANCIAL PROJECT ID

SHEET TITLE: FRAMING PLAN EXAMPLE 2 STRAIGHT STEEL I-GIRDER SUPERSTRUCTURE

PROJECT NAME:

REF. DWG. NO.

SHEET NO.

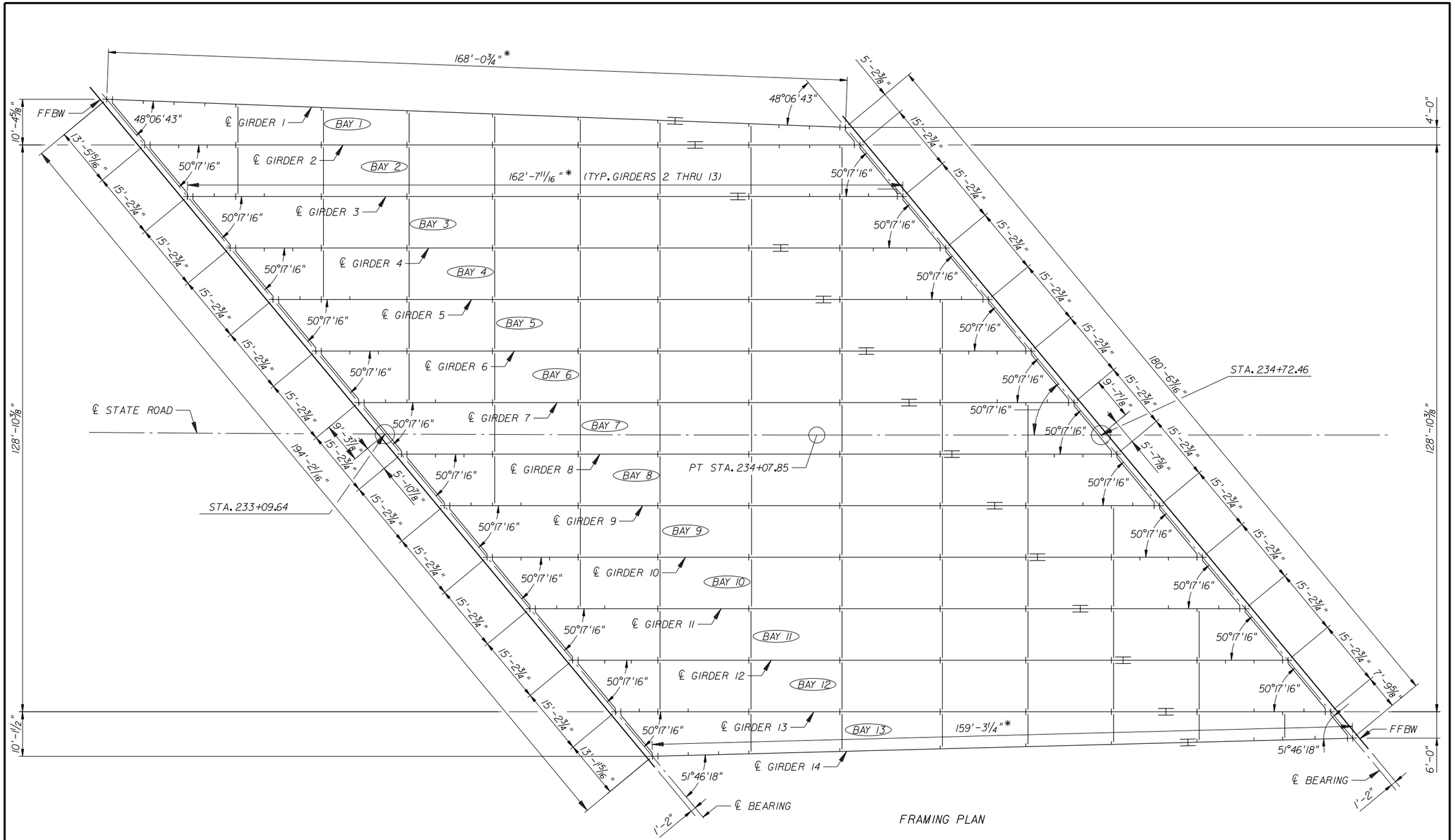

* DENOTES LENGTH ALONG GIRDER CENTERLINE FROM CENTERLINE OF BEARING END BENT 1 TO CENTERLINE OF BEARING END BENT 2

BRIDGE NO. XXXXXX

REVISIONS					
DATE	BY	DESCRIPTION	DATE	BY	DESCRIPTION

STRUCTURES DESIGN OFFICE
CENTRAL OFFICE
605 Suwannee Street, MS 33
Tallahassee, Florida 32399-0450

DRAWN BY: XXX MM-YY
CHECKED BY: XXX MM-YY
DESIGNED BY: XXX MM-YY
CHECKED BY: XXX MM-YY

STATE OF FLORIDA
DEPARTMENT OF TRANSPORTATION

ROAD NO.	COUNTY	FINANCIAL PROJECT ID

SHEET TITLE: FRAMING PLAN EXAMPLE 3
SPLAYED STEEL I-GIRDER SUPERSTRUCTURE (SHEET 1 OF 2)

PROJECT NAME:

REF. DWG. NO.

SHEET NO.

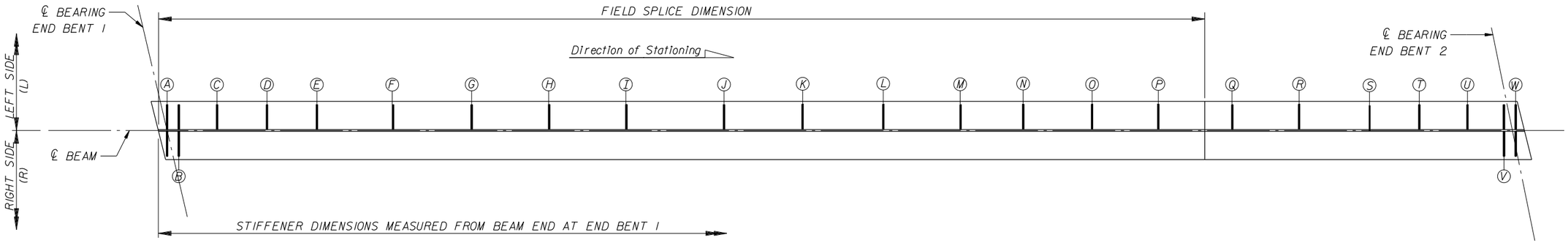

STIFFENER DIMENSIONS & DETAILS

BEAM NO.	STIFFENER MARK A			B			C			D			E			F			G			H			I			J			K			L		
	DIM.	TYPE	SIDE	DIM.	TYPE	SIDE	DIM.	TYPE	SIDE	DIM.	TYPE	SIDE	DIM.	TYPE	SIDE	DIM.	TYPE	SIDE	DIM.	TYPE	SIDE	DIM.	TYPE	SIDE	DIM.	TYPE	SIDE	DIM.	TYPE	SIDE	DIM.	TYPE	SIDE	DIM.	TYPE	SIDE
1	1'-0 1/16"	I	L/R	2'-3 7/8"	I	L/R	9'-3 15/16"	II	R	16'-4 1/16"	II	R	23'-4 1/8"	II	R	30'-4 5/16"	III	R	–	–	–	49'-10"	III	R	–	–	–	69'-3 11/16"	III	R	–	–	–	88'-9 3/8"	III	R
2	11 11/16"	I	L/R	2'-2 5/8"	I	L/R	8'-8 1/2"	II	R	15'-2 5/16"	II	R	21'-8 3/16"	III	L/R	–	–	–	–	–	–	41'-1 11/16"	III	L/R	–	–	–	60'-7 1/4"	III	L/R	–	–	–	80'-0 3/4"	III	L/R
3	11 11/16"	I	L/R	2'-2 5/8"	I	L/R	7'-1"	II	L	11'-11 7/16"	III	L/R	18'-5 1/4"	II	L	–	–	–	31'-4 15/16"	III	L/R	–	–	–	50'-10 7/16"	III	L/R	–	–	–	70'-4"	III	L/R	–	–	–
4	11 11/16"	I	L/R	2'-2 5/8"	I	L/R	8'-8 1/2"	II	R	15'-2 5/16"	II	R	21'-8 3/16"	III	L/R	–	–	–	–	–	–	41'-1 11/16"	III	L/R	–	–	–	60'-7 1/4"	III	L/R	–	–	–	80'-0 3/4"	III	L/R
5	11 11/16"	I	L/R	2'-2 5/8"	I	L/R	7'-1"	II	L	11'-11 7/16"	III	L/R	18'-5 1/4"	II	L	–	–	–	31'-4 15/16"	III	L/R	–	–	–	50'-10 7/16"	III	L/R	–	–	–	70'-4"	III	L/R	–	–	–
6	11 11/16"	I	L/R	2'-2 5/8"	I	L/R	8'-8 1/2"	II	R	15'-2 5/16"	II	R	21'-8 3/16"	III	L/R	–	–	–	–	–	–	41'-1 11/16"	III	L/R	–	–	–	60'-7 1/4"	III	L/R	–	–	–	78'-8 11/16"	III	L/R
7	11 11/16"	I	L/R	2'-2 5/8"	I	L/R	7'-1"	II	L	11'-11 7/16"	II	L	18'-5 1/4"	II	L	–	–	–	31'-4 15/16"	III	L/R	–	–	–	50'-10 7/16"	III	L/R	–	–	–	68'-11 15/16"	III	L/R	–	–	–
8	11 11/16"	I	L/R	2'-2 5/8"	I	L/R	8'-8 1/2"	II	R	15'-2 5/16"	II	R	21'-8 3/16"	III	L/R	–	–	–	–	–	–	41'-1 11/16"	III	L/R	–	–	–	59'-3 3/16"	III	L/R	–	–	–	79'-11 3/8"	III	L/R
9	11 11/16"	I	L/R	2'-2 5/8"	I	L/R	7'-1"	II	L	11'-11 7/16"	III	L/R	18'-5 1/4"	II	L	–	–	–	31'-4 15/16"	III	L/R	–	–	–	49'-6 7/16"	III	L/R	–	–	–	70'-2 5/8"	III	L/R	–	–	–
10	11 11/16"	I	L/R	2'-2 5/8"	I	L/R	8'-8 1/2"	II	R	15'-2 5/16"	II	R	21'-8 3/16"	III	L/R	–	–	–	–	–	–	39'-9 11/16"	III	L/R	–	–	–	60'-5 7/8"	III	L/R	–	–	–	81'-2 1/8"	III	L/R
11	11 11/16"	I	L/R	2'-2 5/8"	I	L/R	7'-1"	II	L	11'-11 7/16"	III	L/R	17'-11 15/16"	II	L	–	–	–	30'-0 7/8"	III	L/R	–	–	–	50'-9 1/8"	III	L/R	–	–	–	71'-5 5/16"	III	L/R	–	–	–
12	11 11/16"	I	L/R	2'-2 5/8"	I	L/R	8'-3 1/8"	II	R	14'-3 5/8"	II	R	20'-4 1/8"	III	L/R	–	–	–	–	–	–	41'-0 3/8"	III	L/R	–	–	–	61'-8 9/16"	III	L/R	–	–	–	84'-6 3/8"	III	L/R
13	11 11/16"	I	L/R	2'-2 7/16"	I	L/R	6'-4 7/8"	II	L	10'-7 3/8"	III	L/R	17'-6 1/8"	II	L	–	–	–	31'-3 9/16"	III	L/R	–	–	–	51'-11 3/16"	III	L/R	–	–	–	74'-9 9/16"	III	L/R	–	–	–
14	11 7/16"	I	L/R	2'-2 7/16"	I	L/R	9'-1 1/4"	II	L	16'-0"	II	L	22'-10 1/2"	III	L	–	–	–	–	–	–	43'-6 13/16"	III	L	–	–	–	66'-4 11/16"	III	L	–	–	–	85'-10 5/16"	III	L

STIFFENER DIMENSIONS & DETAILS

BEAM NO.	STIFFENER MARK M			N			O			P			Q			R			S			T			U			V			W		
	DIM.	TYPE	SIDE	DIM.	TYPE	SIDE	DIM.	TYPE	SIDE	DIM.	TYPE	SIDE	DIM.	TYPE	SIDE	DIM.	TYPE	SIDE	DIM.	TYPE	SIDE	DIM.	TYPE	SIDE	DIM.	TYPE	SIDE	DIM.	TYPE	SIDE	DIM.	TYPE	SIDE
1	–	–	–	108'-3 1/16"	III	R	–	–	–	126'-4 11/16"	III	R	–	–	–	–	–	–	147'-1 1/8"	III	R	153'-11 5/16"	II	R	160'-10 9/16"	II	R	167'-9 3/16"	I	L/R	169'-0 13/16"	I	L/R
2	–	–	–	99'-6 1/4"	III	L/R	–	–	–	117'-7 3/4"	III	L/R	–	–	–	138'-4"	III	L/R	145'-2 15/16"	II	R	152'-1 9/16"	II	R	159'-0 3/16"	III	L/R	162'-4 1/8"	I	L/R	163'-7 3/8"	I	L/R
3	89'-9 1/2"	III	L/R	–	–	–	107'-11"	III	L/R	–	–	–	128'-7 3/16"	III	L/R	–	–	–	142'-4 13/16"	II	L	149'-3 7/16"	III	L/R	155'-9 15/16"	II	L	162'-4 7/16"	I	L/R	163'-7 3/8"	I	L/R
4	–	–	–	98'-2 1/4"	III	L/R	–	–	–	118'-10 7/16"	III	L/R	–	–	–	132'-8 1/16"	II	R	139'-6 11/16"	III	L/R	147'-1 15/16"	II	R	154'-9 3/16"	II	R	162'-4 7/16"	I	L/R	163'-7 3/8"	I	L/R
5	88'-5 7/16"	III	L/R	–	–	–	109'-1 11/16"	III	L/R	–	–	–	129'-9 15/16"	III	L/R	–	–	–	145'-7 1/16"	II	L	152'-7 11/16"	II	R	157'-6 1/16"	II	L	162'-4 7/16"	I	L/R	163'-7 3/8"	I	L/R
6	–	–	–	99'-4 15/16"	III	L/R	–	–	–	120'-1 1/8"	III	L/R	–	–	–	–	–	–	142'-10 15/16"	III	L/R	149'-4 3/4"	II	R	155'-10 5/8"	II	R	162'-4 7/16"	I	L/R	163'-7 3/8"	I	L/R
7	89'-8 3/16"	III	L/R	–	–	–	110'-4 3/8"	III	L/R	–	–	–	133'-2 3/16"	III	L/R	–	–	–	146'-1 7/8"	II	L	152'-7 11/16"	II	R	157'-6 1/16"	II	L	162'-4 7/16"	I	L/R	163'-7 3/8"	I	L/R
8	–	–	–	100'-7 5/8"	III	L/R	–	–	–	123'-5 3/8"	III	L/R	–	–	–	–	–	–	142'-10 15/16"	III	L/R	149'-4 3/4"	II	R	155'-10 5/8"	II	R	162'-4 7/16"	I	L/R	163'-7 3/8"	I	L/R
9	90'-10 7/8"	III	L/R	–	–	–	113'-8 5/8"	III	L/R	–	–	–	133'-2 3/16"	III	L/R	–	–	–	146'-1 7/8"	II	L	152'-7 11/16"	II	R	157'-6 1/16"	II	L	162'-4 7/16"	I	L/R	163'-7 3/8"	I	L/R
10	–	–	–	103'-11 7/8"	III	L/R	–	–	–	123'-5 3/8"	III	L/R	–	–	–	–	–	–	142'-10 15/16"	III	L/R	149'-4 3/4"	II	R	155'-10 5/8"	II	R	162'-4 7/16"	I	L/R	163'-7 3/8"	I	L/R
11	–	–	–	103'-11 7/8"	II	L	113'-8 5/8"	III	L/R	–	–	–	133'-2 3/16"	III	L/R	–	–	–	146'-1 7/8"	II	L	152'-7 11/16"	II	R	157'-7 1/16"	II	L	162'-4 7/16"	I	L/R	163'-7 3/8"	I	L/R
12	–	–	–	103'-11 7/8"	III	L/R	–	–	–	123'-5 3/8"	III	L/R	–	–	–	–	–	–	142'-10 15/16"	III	L/R	149'-4 3/4"	II	R	155'-10 5/8"	II	R	162'-4 7/16"	I	L/R	163'-7 3/8"	I	L/R
13	94'-3 1/8"	III	L/R	–	–	–	113'-8 5/8"	III	L/R	–	–	–	133'-2 3/16"	III	L/R	–	–	–	146'-1 7/8"	II	L	152'-7 11/16"	II	R	157'-6 1/16"	II	L	162'-4 7/16"	I	L/R	163'-7 3/8"	I	L/R
14	–	–	–	105'-3 15/16"	III	L	–	–	–	–	–	–	124'-9 1/2"	III	L	–	–	–	137'-9 1/4"	II	L	144'-3 1/8"	III	L	151'-7 13/16"	II	L	159'-0 1/8"	I	L/R	160'-2 11/16"	I	L/R

NOTES:
1. ALL STIFFENER DIMENSIONS ARE MEASURED FROM BEAM END AT END BENT 1 AND ALONG ℄ BEAM.
2. FOR DETAILS ON STIFFENER TYPES, SEE SHEET B-XX.

FIELD SPLICE DIMENSIONS

BEAM 1	BEAM 2-13	BEAM 14
130' -3 3/4"	126' -1 3/8"	122' -8 5/8"

BRIDGE NO. XXXXXX

REVISIONS

DATE	BY	DESCRIPTION	DATE	BY	DESCRIPTION

STRUCTURES DESIGN OFFICE
CENTRAL OFFICE
605 Suwannee Street, MS 33
Tallahassee, Florida 32399-0450

DRAWN BY: XXX MM-YY
CHECKED BY: XXX MM-YY
DESIGNED BY: XXX MM-YY
CHECKED BY: XXX MM-YY

STATE OF FLORIDA
DEPARTMENT OF TRANSPORTATION

ROAD NO.	COUNTY	FINANCIAL PROJECT ID

SHEET TITLE: FRAMING PLAN EXAMPLE 3
SPLAYED STEEL I-GIRDER SUPERSTRUCTURE (SHEET 2 OF 2)

PROJECT NAME:

REF. DWG. NO.

SHEET NO.

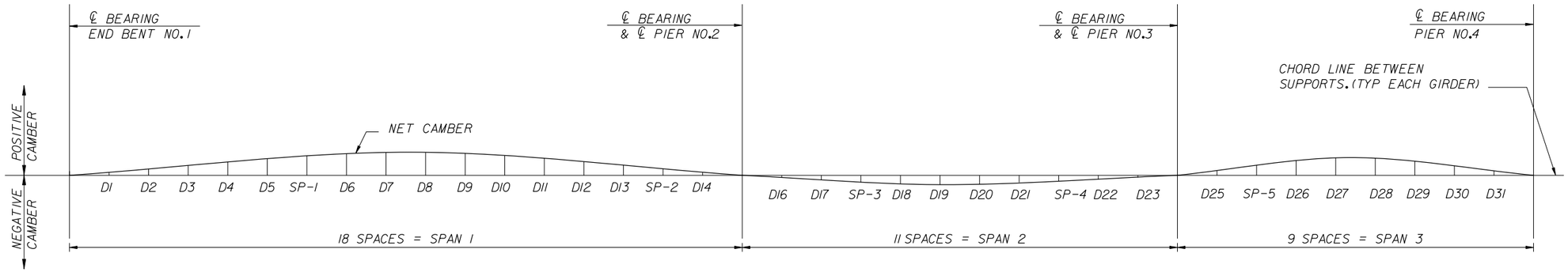

GIRDER	CAMBER DATA	SPAN NO. 1 ℄ BRG	D1	D2	D3	D4	D5	SP-1	D6	D7	D8	D9	D10	D11	D12	D13	SP-2	D14	℄ BRG
4	STEEL	0.000	0.346	0.668	0.960	1.396	1.710	1.837	1.885	1.948	1.907	1.765	1.534	1.232	0.887	0.536	0.341	0.228	0.000
	NCDL	0.000	0.865	1.671	2.410	3.538	4.367	4.708	4.837	5.014	4.921	4.565	3.978	3.209	2.324	1.418	0.907	0.612	0.000
	CDL	0.000	0.133	0.258	0.373	0.550	0.684	0.744	0.768	0.805	0.798	0.747	0.657	0.534	0.391	0.241	0.155	0.104	0.000
	VCC	0.000	0.000	0.000	0.000	0.000	0.000	0.000	0.000	0.000	0.000	0.000	0.000	0.000	0.000	0.000	0.000	0.000	0.000
	TOTAL	0.000	1.344	2.597	3.743	5.484	6.761	7.289	7.490	7.767	7.626	7.077	6.169	4.975	3.602	2.195	1.403	0.944	0.000
3	STEEL	N/A	0.000	0.344	0.671	1.201	1.635	1.843	1.934	2.107	2.147	2.052	1.831	1.506	1.109	0.687	0.445	0.302	0.000
	NCDL	N/A	0.000	0.823	1.598	2.832	3.818	4.277	4.472	4.834	4.897	4.658	4.145	3.407	2.514	1.564	1.015	0.691	0.000
	CDL	N/A	0.000	0.130	0.254	0.454	0.618	0.698	0.733	0.800	0.816	0.781	0.698	0.577	0.427	0.267	0.173	0.117	0.000
	VCC	N/A	0.000	0.000	0.000	0.000	0.000	0.000	0.000	0.000	0.000	0.000	0.000	0.000	0.000	0.000	0.000	0.000	0.000
	TOTAL	N/A	0.000	1.297	2.523	4.487	6.071	6.818	7.139	7.741	7.860	7.491	6.674	5.490	4.050	2.518	1.633	1.111	0.000
2	STEEL	N/A	N/A	0.000	0.366	0.992	1.548	1.843	1.983	2.270	2.390	2.340	2.128	1.781	1.338	0.850	0.558	0.381	0.000
	NCDL	N/A	N/A	0.000	0.778	2.088	3.219	3.807	4.084	4.635	4.851	4.729	4.292	3.592	2.700	1.721	1.132	0.775	0.000
	CDL	N/A	N/A	0.000	0.129	0.349	0.542	0.644	0.693	0.791	0.831	0.813	0.739	0.618	0.464	0.295	0.193	0.132	0.000
	VCC	N/A	N/A	0.000	0.000	0.000	0.000	0.000	0.000	0.000	0.000	0.000	0.000	0.000	0.000	0.000	0.000	0.000	0.000
	TOTAL	N/A	N/A	0.000	1.273	3.429	5.309	6.294	6.760	7.696	8.072	7.882	7.159	5.991	4.502	2.866	1.883	1.288	0.000
1	STEEL	N/A	N/A	N/A	0.000	0.771	1.475	1.859	2.046	2.447	2.649	2.643	2.439	2.064	1.564	1.002	0.662	0.455	0.000
	NCDL	N/A	N/A	N/A	0.000	1.391	2.670	3.369	3.712	4.449	4.826	4.824	4.460	3.786	2.879	1.857	1.232	0.851	0.000
	CDL	N/A	N/A	N/A	0.000	0.248	0.475	0.599	0.659	0.789	0.854	0.852	0.785	0.664	0.503	0.322	0.213	0.146	0.000
	VCC	N/A	N/A	N/A	0.000	0.000	0.000	0.000	0.000	0.000	0.000	0.000	0.000	0.000	0.000	0.000	0.000	0.000	0.000
	TOTAL	N/A	N/A	N/A	0.000	2.410	4.620	5.827	6.417	7.685	8.329	8.319	7.684	6.514	4.946	3.181	2.107	1.452	0.000

GIRDER	CAMBER DATA	SPAN NO. 2 ℄ BRG	D16	D17	SP-3	D18	D19	D20	D21	SP-4	D22	D23	℄ BRG
4	STEEL	0.000	-0.114	-0.143	-0.127	-0.122	-0.093	-0.062	-0.045	-0.043	-0.043	-0.040	0.000
	NCDL	0.000	-0.335	-0.457	-0.461	-0.454	-0.412	-0.355	-0.311	-0.300	-0.282	-0.213	0.000
	CDL	0.000	-0.055	-0.071	-0.066	-0.064	-0.054	-0.042	-0.035	-0.034	-0.032	-0.026	0.000
	VCC	0.000	0.000	0.000	0.000	0.000	0.000	0.000	0.000	0.000	0.000	0.000	0.000
	TOTAL	0.000	-0.504	-0.671	-0.654	-0.640	-0.559	-0.459	-0.391	-0.377	-0.357	-0.279	0.000
3	STEEL	0.000	-0.176	-0.249	-0.261	-0.258	-0.238	-0.200	-0.164	-0.151	-0.131	-0.087	0.000
	NCDL	0.000	-0.416	-0.606	-0.665	-0.663	-0.648	-0.594	-0.525	-0.496	-0.446	-0.304	0.000
	CDL	0.000	-0.068	-0.094	-0.097	-0.096	-0.087	-0.075	-0.064	-0.060	-0.054	-0.038	0.000
	VCC	0.000	0.000	0.000	0.000	0.000	0.000	0.000	0.000	0.000	0.000	0.000	0.000
	TOTAL	0.000	-0.660	-0.949	-1.023	-1.017	-0.973	-0.869	-0.753	-0.707	-0.631	-0.429	0.000
2	STEEL	0.000	-0.239	-0.356	-0.396	-0.394	-0.384	-0.341	-0.285	-0.260	-0.220	-0.134	0.000
	NCDL	0.000	-0.502	-0.767	-0.883	-0.885	-0.899	-0.848	-0.755	-0.708	-0.619	-0.399	0.000
	CDL	0.000	-0.081	-0.118	-0.128	-0.127	-0.123	-0.109	-0.094	-0.088	-0.077	-0.050	0.000
	VCC	0.000	0.000	0.000	0.000	0.000	0.000	0.000	0.000	0.000	0.000	0.000	0.000
	TOTAL	0.000	-0.822	-1.241	-1.407	-1.406	-1.406	-1.298	-1.134	-1.056	-0.916	-0.583	0.000
1	STEEL	0.000	-0.304	-0.468	-0.538	-0.538	-0.537	-0.486	-0.407	-0.371	-0.310	-0.183	0.000
	NCDL	0.000	-0.590	-0.937	-1.116	-1.124	-1.169	-1.117	-0.993	-0.927	-0.802	-0.496	0.000
	CDL	0.000	-0.095	-0.144	-0.162	-0.162	-0.159	-0.145	-0.125	-0.116	-0.100	-0.063	0.000
	VCC	0.000	0.000	0.000	0.000	0.000	0.000	0.000	0.000	0.000	0.000	0.000	0.000
	TOTAL	0.000	-0.989	-1.549	-1.816	-1.824	-1.865	-1.748	-1.525	-1.414	-1.212	-0.742	0.000

GIRDER	CAMBER DATA	SPAN NO. 3 ℄ BRG	D25	SP-5	D26	D27	D28	D29	D30	D31	℄ BRG
4	STEEL	0.000	0.113	0.182	0.257	0.384	0.455	0.448	0.360	0.202	0.000
	NCDL	0.000	0.481	0.763	1.070	1.571	1.839	1.801	1.440	0.803	0.000
	CDL	0.000	0.062	0.099	0.139	0.204	0.239	0.234	0.188	0.105	0.000
	VCC	0.000	1.116	1.548	1.920	2.388	2.544	2.388	1.908	1.104	0.000
	TOTAL	0.000	1.772	2.592	3.386	4.547	5.172	4.871	3.896	2.214	0.000
3	STEEL	0.000	0.164	0.257	0.356	0.518	0.604	0.590	0.471	0.262	0.000
	NCDL	0.000	0.582	0.912	1.265	1.837	2.139	2.087	1.666	0.928	0.000
	CDL	0.000	0.075	0.117	0.163	0.236	0.274	0.268	0.213	0.119	0.000
	VCC	0.000	1.116	1.548	1.920	2.388	2.544	2.388	1.896	1.104	0.000
	TOTAL	0.000	1.937	2.834	3.704	4.979	5.561	5.333	4.246	2.413	0.000
2	STEEL	0.000	0.216	0.333	0.456	0.652	0.753	0.731	0.581	0.323	0.000
	NCDL	0.000	0.680	1.054	1.451	2.090	2.421	2.354	1.873	1.042	0.000
	CDL	0.000	0.088	0.136	0.187	0.267	0.308	0.298	0.236	0.131	0.000
	VCC	0.000	1.116	1.548	1.908	2.388	2.544	2.376	1.896	1.092	0.000
	TOTAL	0.000	2.100	3.071	4.002	5.397	6.026	5.759	4.586	2.588	0.000
1	STEEL	0.000	0.269	0.410	0.557	0.790	0.908	0.877	0.695	0.386	0.000
	NCDL	0.000	0.778	1.198	1.639	2.345	2.711	2.632	2.089	1.160	0.000
	CDL	0.000	0.102	0.156	0.213	0.302	0.347	0.335	0.265	0.147	0.000
	VCC	0.000	1.118	1.548	1.913	2.395	2.554	2.388	1.910	1.109	0.000
	TOTAL	0.000	2.267	3.312	4.322	5.832	6.520	6.232	4.959	2.802	0.000

CAMBER NOTES:

1. ALL CAMBER ORDINATES ARE MEASURED FROM A CHORD INTERSECTING THE CENTERLINE OF BEARING AT THE SUPPORTS.
2. "STEEL" INCLUDES THE DEAD LOAD DUE TO THE STEEL GIRDER, SPLICE PLATES, STIFFENERS, MISCELLANEOUS DETAILS AND DIAPHRAGMS.
3. "NCDL" NON-COMPOSITE DEAD LOAD INCLUDES THE CONCRETE SLAB AND HAUNCHES.
4. "CDL" COMPOSITE DEAD LOAD IS THE SUPERIMPOSED DEAD LOAD CONSISTING OF THE CONCRETE TRAFFIC RAILINGS.
5. "VCC" VERTICAL CURVE CORRECTION INCLUDES THE ADJUSTMENTS NECESSARY DUE TO THE ROADWAY PROFILE AND CROSS SLOPE.
6. ALL CAMBER ORDINATES ARE GIVEN IN INCHES.
7. POSITIVE DEFLECTIONS ARE DOWNWARD, POSITIVE CAMBERS ARE UPWARD.
8. CAMBER VALUES SHOWN ARE BASED ON A GRID ANALYSIS.
9. SEE SHEETS B-XX & B-XX FOR LOCATIONS OF CAMBER POINTS.

BRIDGE NO. XXXXXX

REVISIONS					
DATE	BY	DESCRIPTION	DATE	BY	DESCRIPTION

STRUCTURES DESIGN OFFICE
CENTRAL OFFICE
605 Suwannee Street, MS 33
Tallahassee, Florida 32399-0450

DRAWN BY: XXX MM-YY
CHECKED BY: XXX MM-YY
DESIGNED BY: XXX MM-YY
CHECKED BY: XXX MM-YY

STATE OF FLORIDA
DEPARTMENT OF TRANSPORTATION

ROAD NO.	COUNTY	FINANCIAL PROJECT ID

SHEET TITLE: CAMBER DIAGRAM EXAMPLE 1
CONTINUOUS I-GIRDER (SHEET 1 OF 2)

PROJECT NAME:

REF. DWG. NO.

SHEET NO.

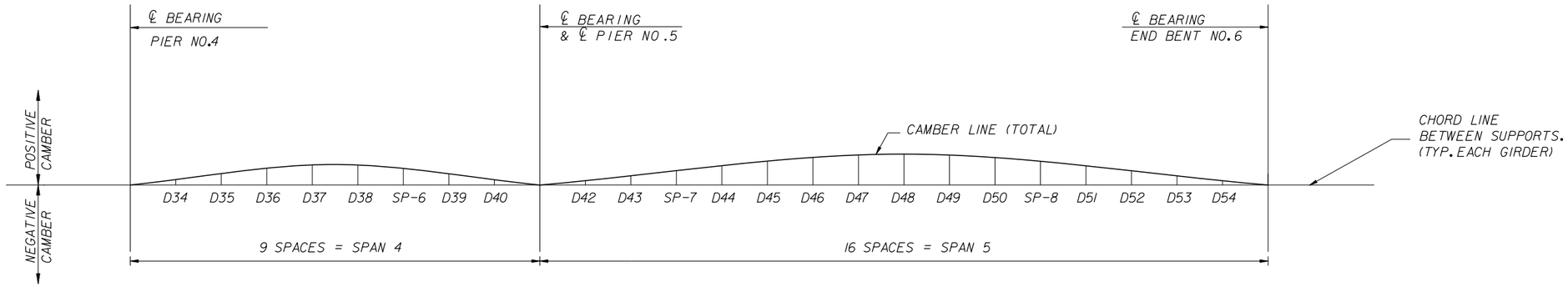

GIRDER	CAMBER DATA	SPAN NO. 4									
		℄ BRG	D34	D35	D36	D37	D38	SP-6	D39	D40	℄ BRG
4	STEEL	0.000	0.062	0.094	0.081	0.024	-0.055	-0.081	-0.118	-0.113	0.000
	NCDL	0.000	0.383	0.644	0.705	0.556	0.240	0.111	-0.090	-0.214	0.000
	CDL	0.000	0.041	0.068	0.072	0.053	0.018	0.004	-0.018	-0.032	0.000
	VCC	0.000	1.118	1.913	2.395	2.554	2.400	2.267	1.922	1.121	0.000
	TOTAL	0.000	1.604	2.719	3.253	3.187	2.603	2.301	1.696	0.762	0.000
3	STEEL	0.000	0.057	0.082	0.059	-0.006	-0.091	-0.118	-0.153	-0.136	0.000
	NCDL	0.000	0.418	0.698	0.762	0.597	0.250	0.110	-0.105	-0.231	0.000
	CDL	0.000	0.043	0.071	0.074	0.052	0.014	-0.001	-0.024	-0.037	0.000
	VCC	0.000	1.118	1.913	2.395	2.554	2.400	2.268	1.922	1.121	0.000
	TOTAL	0.000	1.636	2.764	3.290	3.197	2.573	2.259	1.640	0.717	0.000
2	STEEL	0.000	0.050	0.067	0.036	-0.038	-0.127	-0.155	-0.187	-0.157	0.000
	NCDL	0.000	0.439	0.731	0.796	0.616	0.248	0.100	-0.122	-0.247	0.000
	CDL	0.000	0.044	0.072	0.073	0.049	0.009	-0.007	-0.031	-0.041	0.000
	VCC	0.000	1.128	1.920	2.400	2.556	2.400	2.268	1.908	1.116	0.000
	TOTAL	0.000	1.661	2.790	3.305	3.183	2.530	2.206	1.568	0.671	0.000
1	STEEL	0.000	0.044	0.053	0.011	-0.072	-0.166	-0.192	-0.219	-0.178	0.000
	NCDL	0.000	0.449	0.746	0.805	0.609	0.223	0.072	-0.147	-0.262	0.000
	CDL	0.000	0.045	0.072	0.072	0.045	0.001	-0.015	-0.038	-0.047	0.000
	VCC	0.000	1.117	1.922	2.404	2.561	2.394	2.268	1.915	1.124	0.000
	TOTAL	0.000	1.655	2.793	3.292	3.143	2.452	2.133	1.511	0.637	0.000

GIRDER	CAMBER DATA	SPAN NO. 5																
		℄ BRG	D42	D43	SP-7	D44	D45	D46	D47	D48	D49	D50	SP-8	D51	D52	D53	D54	℄ BRG
4	STEEL	0.000	0.208	0.501	0.618	0.839	1.163	1.432	1.617	1.696	1.659	1.504	1.394	1.234	0.853	0.595	0.310	0.000
	NCDL	0.000	0.528	1.336	1.666	2.298	3.242	4.044	4.605	4.859	4.769	4.327	4.012	3.550	2.448	1.708	0.887	0.000
	CDL	0.000	0.081	0.198	0.245	0.331	0.456	0.558	0.626	0.654	0.637	0.576	0.534	0.472	0.326	0.227	0.118	0.000
	VCC	0.000	1.604	2.933	3.336	3.997	4.786	5.298	5.534	5.507	5.203	4.636	4.272	3.780	2.736	1.972	1.112	0.000
	TOTAL	0.000	2.421	4.968	5.865	7.465	9.647	11.332	12.382	12.716	12.268	11.043	10.212	9.036	6.363	4.502	2.427	0.000
3	STEEL	0.000	0.235	0.559	0.686	0.924	1.265	1.533	1.694	1.725	1.621	1.386	1.239	1.036	0.588	0.304	0.000	N/A
	NCDL	0.000	0.552	1.388	1.727	2.369	3.311	4.076	4.561	4.698	4.456	3.845	3.449	2.898	1.655	0.859	0.000	N/A
	CDL	0.000	0.087	0.213	0.261	0.352	0.480	0.579	0.638	0.650	0.611	0.524	0.469	0.394	0.224	0.116	0.000	N/A
	VCC	0.000	1.522	2.767	3.132	3.749	4.442	4.884	5.038	4.927	4.541	3.878	3.492	2.952	1.818	1.019	0.000	N/A
	TOTAL	0.000	2.396	4.927	5.806	7.394	9.498	11.072	11.931	12.000	11.229	9.633	8.649	7.280	4.285	2.298	0.000	N/A
2	STEEL	0.000	0.263	0.619	0.757	1.011	1.367	1.633	1.768	1.752	1.580	1.263	1.076	0.829	0.311	0.000	N/A	N/A
	NCDL	0.000	0.576	1.438	1.783	2.432	3.364	4.088	4.494	4.510	4.115	3.312	2.857	2.215	0.842	0.000	N/A	N/A
	CDL	0.000	0.094	0.227	0.279	0.372	0.503	0.599	0.648	0.642	0.580	0.466	0.399	0.308	0.117	0.000	N/A	N/A
	VCC	0.000	1.429	2.606	2.952	3.496	4.121	4.470	4.555	4.364	3.898	3.155	2.724	2.148	0.937	0.000	N/A	N/A
	TOTAL	0.000	2.362	4.890	5.771	7.311	9.355	10.790	11.465	11.268	10.173	8.196	7.056	5.500	2.207	0.000	N/A	N/A
1	STEEL	0.000	0.294	0.682	0.829	1.100	1.473	1.737	1.849	1.785	1.543	1.142	0.915	0.616	0.000	N/A	N/A	N/A
	NCDL	0.000	0.603	1.482	1.831	2.483	3.407	4.096	4.422	4.318	3.766	2.807	2.255	1.524	0.000	N/A	N/A	N/A
	CDL	0.000	0.102	0.243	0.296	0.394	0.527	0.621	0.661	0.638	0.552	0.409	0.327	0.221	0.000	N/A	N/A	N/A
	VCC	0.000	1.362	2.460	2.772	3.270	3.816	4.086	4.092	3.822	3.276	2.454	1.980	1.368	0.000	N/A	N/A	N/A
	TOTAL	0.000	2.361	4.867	5.728	7.247	9.223	10.540	11.024	10.563	9.137	6.812	5.477	3.729	0.000	N/A	N/A	N/A

CAMBER NOTES:

1. ALL CAMBER ORDINATES ARE MEASURED FROM A CHORD INTERSECTING THE CENTERLINE OF BEARING AT THE SUPPORTS.
2. "STEEL" INCLUDES THE DEAD LOAD DUE TO THE STEEL GIRDER, SPLICE PLATES, STIFFENERS, MISCELLANEOUS DETAILS AND DIAPHRAGMS.
3. "NCDL" NON-COMPOSITE DEAD LOAD INCLUDES THE CONCRETE SLAB AND HAUNCHES.
4. "CDL" COMPOSITE DEAD LOAD IS THE SUPERIMPOSED DEAD LOAD CONSISTING OF THE CONCRETE TRAFFIC RAILINGS.
5. "VCC" VERTICAL CURVE CORRECTION INCLUDES THE ADJUSTMENTS NECESSARY DUE TO THE ROADWAY PROFILE AND CROSS SLOPE.
6. ALL CAMBER ORDINATES ARE GIVEN IN INCHES.
7. POSITIVE DEFLECTIONS ARE DOWNWARD, POSITIVE CAMBERS ARE UPWARD.
8. CAMBER VALUES SHOWN ARE BASED ON A GRID ANALYSIS.
9. SEE SHEETS B-XX & B-XX FOR LOCATIONS OF CAMBER POINTS.

BRIDGE NO. XXXXXX

REVISIONS					
DATE	BY	DESCRIPTION	DATE	BY	DESCRIPTION

STRUCTURES DESIGN OFFICE
CENTRAL OFFICE
605 Suwannee Street, MS 33
Tallahassee, Florida 32399-0450

DRAWN BY: XXX MM-YY
CHECKED BY: XXX MM-YY
DESIGNED BY: XXX MM-YY
CHECKED BY: XXX MM-YY

STATE OF FLORIDA
DEPARTMENT OF TRANSPORTATION

ROAD NO.	COUNTY	FINANCIAL PROJECT ID

SHEET TITLE: CAMBER DIAGRAM EXAMPLE 1 CONTINUOUS I-GIRDER (SHEET 2 OF 2)

PROJECT NAME:

REF. DWG. NO.

SHEET NO.

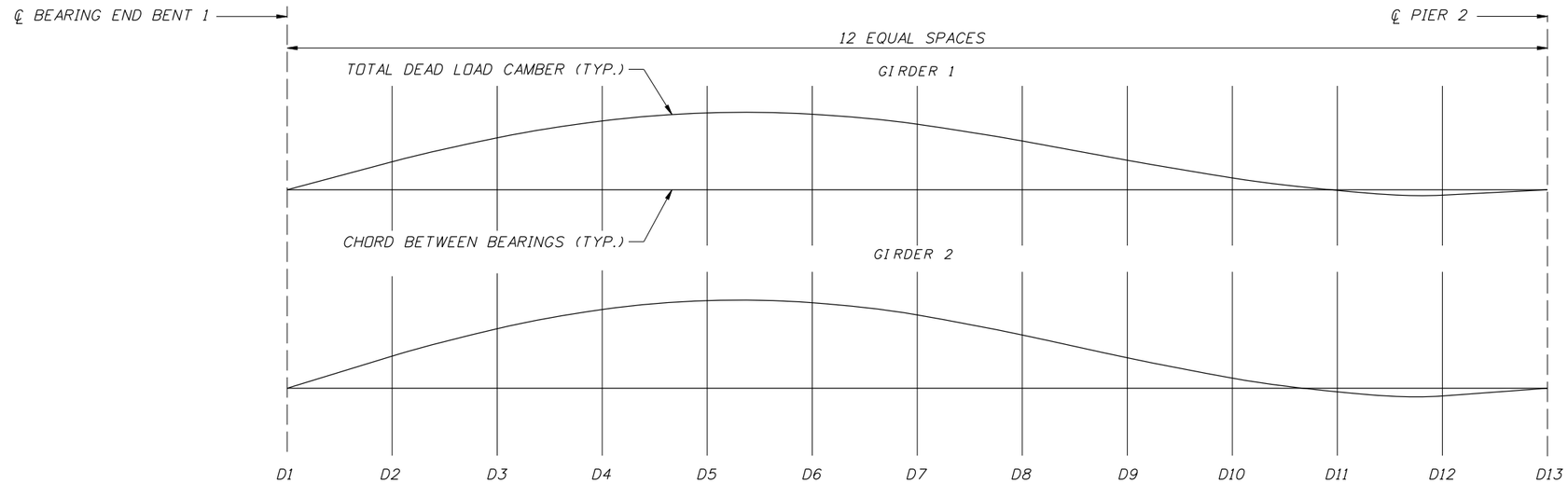

GIRDER	ITEM	SPAN 1												
		D1	D2	D3	D4	D5	D6	D7	D8	D9	D10	D11	D12	D13
1	STEEL	0.000	0.199	0.361	0.462	0.490	0.442	0.332	0.181	0.024	-0.108	-0.175	-0.148	0.000
	SLAB	0.000	0.955	1.778	2.369	2.671	2.661	2.357	1.815	1.177	0.587	0.146	-0.071	0.000
	S. D. L.	0.000	0.092	0.171	0.228	0.256	0.255	0.226	0.174	0.111	0.048	0.001	-0.019	0.000
	TOTAL DEAD LOAD CAMBER REQD.	0.000	1.246	2.310	3.059	3.417	3.358	2.915	2.170	1.312	0.527	-0.028	-0.238	0.000
	VERTICAL CURVE (SEE NOTE 5)													
2	STEEL	0.000	0.206	0.370	0.466	0.478	0.407	0.269	0.093	-0.081	-0.217	-0.269	-0.205	0.000
	SLAB	0.000	1.121	2.088	2.785	3.137	3.117	2.747	2.090	1.323	0.624	0.118	-0.113	0.000
	S. D. L.	0.000	0.101	0.187	0.248	0.279	0.276	0.242	0.183	0.112	0.042	-0.008	-0.026	0.000
	TOTAL DEAD LOAD CAMBER REQD.	0.000	1.428	2.645	3.499	3.894	3.800	3.258	2.366	1.354	0.449	-0.159	-0.344	0.000
	VERTICAL CURVE (SEE NOTE 5)													

NOTES

1. ALL CAMBER ORDINATES ARE GIVEN IN INCHES.
2. STEEL IS CAMBER ORDINATE DUE TO THE STEEL BOX GIRDER, CROSS FRAMES AND OTHER MISCELLANEOUS STEEL ITEMS.
3. SLAB IS CAMBER ORDINATE DUE TO THE CONCRETE DECK SLAB, HAUNCHES AND STAY-IN-PLACE FORMS.
4. S.D.L. IS SUPERIMPOSED DEAD LOAD CONSISTING OF THE CONCRETE TRAFFIC RAILINGS.
5. SHOP DRAWINGS SHALL INDICATE VERTICAL CURVE CAMBER REQUIRED.
6. BOX GIRDER LENGTHS SHALL BE ADJUSTED FOR GIRDERS ON GRADE. SHOP DRAWINGS SHALL BE PREPARED ACCORDINGLY.
7. CAMBERED GIRDER LENGTHS SHALL BE ADJUSTED AND SOLE PLATES ARE TO BE PLACED ON THE CAMBERED GIRDER AND SHALL BE ALIGNED WITH THE ANCHORS AFTER THE DEAD LOAD DEFLECTION HAS OCCURRED. SHOP DRAWINGS SHALL BE PREPARED ACCORDINGLY.
8. CAMBER VALUES ARE BASED ON A GRID ANALYSIS.

SPAN 1 CAMBER - GIRDER 1 & 2

BRIDGE NO. XXXXXX

REVISIONS					
DATE	BY	DESCRIPTION	DATE	BY	DESCRIPTION

STRUCTURES DESIGN OFFICE
CENTRAL OFFICE
605 Suwannee Street, MS 33
Tallahassee, Florida 32399-0450

DRAWN BY: XXX MM-YY
CHECKED BY: XXX MM-YY
DESIGNED BY: XXX MM-YY
CHECKED BY: XXX MM-YY

STATE OF FLORIDA
DEPARTMENT OF TRANSPORTATION

ROAD NO.	COUNTY	FINANCIAL PROJECT ID

SHEET TITLE: CAMBER DIAGRAM EXAMPLE 2 CURVED STEEL BOX GIRDER (SHEET 1 OF 4)

PROJECT NAME:

REF. DWG. NO.

SHEET NO.

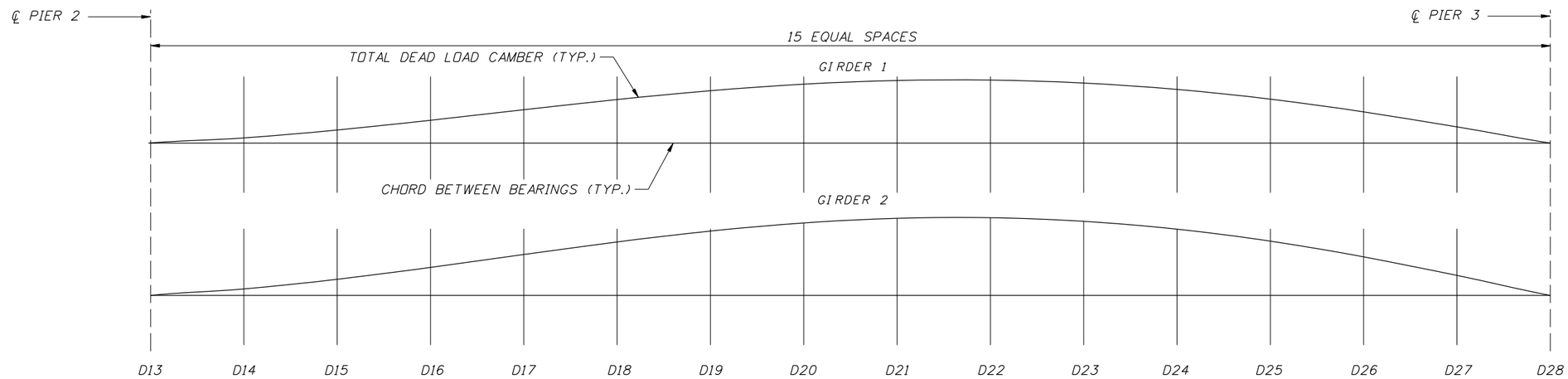

GIRDER	ITEM	SPAN 2															
		D13	D14	D15	D16	D17	D18	D19	D20	D21	D22	D23	D24	D25	D26	D27	D28
1	STEEL	0.000	0.293	0.694	1.161	1.651	2.113	2.502	2.783	2.930	2.928	2.773	2.466	2.011	1.424	0.739	0.000
	SLAB	0.000	0.417	1.100	1.966	2.926	3.866	4.690	5.315	5.678	5.744	5.493	4.926	4.044	2.877	1.498	0.000
	S. D. L.	0.000	0.067	0.170	0.295	0.428	0.553	0.659	0.736	0.777	0.778	0.737	0.656	0.535	0.379	0.197	0.000
	TOTAL DEAD LOAD CAMBER REQD.	0.000	0.777	1.964	3.422	5.005	6.532	7.851	8.834	9.385	9.450	9.003	8.048	6.590	4.680	2.434	0.000
	VERTICAL CURVE (SEE NOTE 5)																
2	STEEL	0.000	0.371	0.867	1.442	2.045	2.616	3.099	3.449	3.634	3.635	3.443	3.063	2.499	1.770	0.918	0.000
	SLAB	0.000	0.520	1.353	2.413	3.596	4.765	5.795	6.580	7.043	7.135	6.830	6.128	5.034	3.582	1.863	0.000
	S. D. L.	0.000	0.080	0.200	0.343	0.494	0.634	0.751	0.835	0.879	0.879	0.832	0.739	0.603	0.427	0.222	0.000
	TOTAL DEAD LOAD CAMBER REQD.	0.000	0.971	2.420	4.198	6.135	8.015	9.645	10.864	11.556	11.649	11.105	9.930	8.136	5.779	3.003	0.000
	VERTICAL CURVE (SEE NOTE 5)																

NOTES

1. ALL CAMBER ORDINATES ARE GIVEN IN INCHES.
2. STEEL IS CAMBER ORDINATE DUE TO THE STEEL BOX GIRDER, CROSS FRAMES AND OTHER MISCELLANEOUS STEEL ITEMS.
3. SLAB IS CAMBER ORDINATE DUE TO THE CONCRETE DECK SLAB, HAUNCHES AND STAY-IN-PLACE FORMS.
4. S.D.L. IS SUPERIMPOSED DEAD LOAD CONSISTING OF THE CONCRETE TRAFFIC RAILINGS.
5. SHOP DRAWINGS SHALL INDICATE VERTICAL CURVE CAMBER REQUIRED.
6. BOX GIRDER LENGTHS SHALL BE ADJUSTED FOR GIRDERS ON GRADE. SHOP DRAWINGS SHALL BE PREPARED ACCORDINGLY.
7. CAMBERED GIRDER LENGTHS SHALL BE ADJUSTED AND SOLE PLATES ARE TO BE PLACED ON THE CAMBERED GIRDER AND SHALL BE ALIGNED WITH THE ANCHORS AFTER THE DEAD LOAD DEFLECTION HAS OCCURRED. SHOP DRAWINGS SHALL BE PREPARED ACCORDINGLY.
8. CAMBER VALUES ARE BASED ON A GRID ANALYSIS.

SPAN 2 CAMBER - GIRDER 1 & 2

BRIDGE NO. XXXXXX

REVISIONS					
DATE	BY	DESCRIPTION	DATE	BY	DESCRIPTION

STRUCTURES DESIGN OFFICE
CENTRAL OFFICE
605 Suwannee Street, MS 33
Tallahassee, Florida 32399-0450

DRAWN BY: XXX MM-YY
CHECKED BY: XXX MM-YY
DESIGNED BY: XXX MM-YY
CHECKED BY: XXX MM-YY

STATE OF FLORIDA
DEPARTMENT OF TRANSPORTATION

ROAD NO.	COUNTY	FINANCIAL PROJECT ID

SHEET TITLE: CAMBER DIAGRAM EXAMPLE 2
CURVED STEEL BOX GIRDER (SHEET 2 OF 4)

PROJECT NAME:

REF. DWG. NO.

SHEET NO.

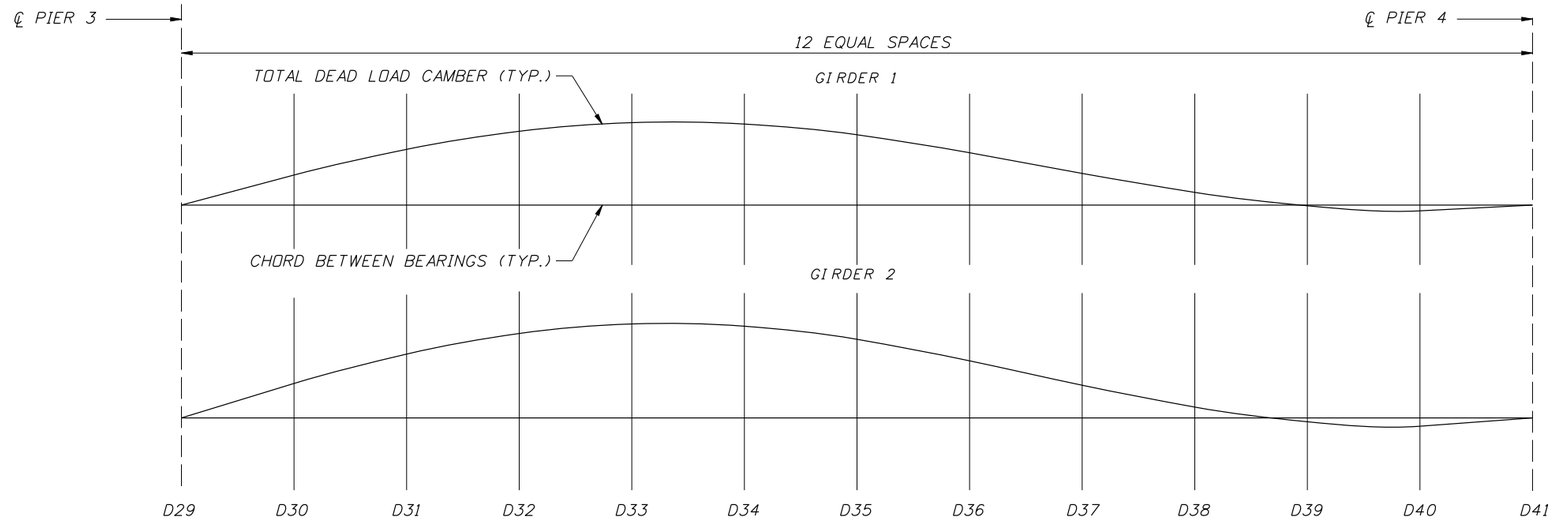

GIRDER	ITEM	SPAN 3												
		D29	D30	D31	D32	D33	D34	D35	D36	D37	D38	D39	D40	D41
1	STEEL	0.000	0.199	0.361	0.462	0.490	0.442	0.332	0.181	0.024	-0.108	-0.175	-0.148	0.000
	SLAB	0.000	0.955	1.778	2.369	2.671	2.661	2.357	1.815	1.177	0.587	0.146	-0.071	0.000
	S. D. L.	0.000	0.092	0.171	0.228	0.256	0.255	0.226	0.174	0.111	0.048	0.001	-0.019	0.000
	TOTAL DEAD LOAD CAMBER REQD.	0.000	1.246	2.310	3.059	3.417	3.358	2.915	2.170	1.312	0.527	-0.028	-0.238	0.000
	VERTICAL CURVE (SEE NOTE 5)													
2	STEEL	0.000	0.206	0.370	0.466	0.478	0.407	0.269	0.093	-0.081	-0.217	-0.269	-0.205	0.000
	SLAB	0.000	1.121	2.088	2.785	3.137	3.117	2.747	2.090	1.323	0.624	0.118	-0.113	0.000
	S. D. L.	0.000	0.101	0.187	0.248	0.279	0.276	0.242	0.183	0.112	0.042	-0.008	-0.026	0.000
	TOTAL DEAD LOAD CAMBER REQD.	0.000	1.428	2.645	3.499	3.894	3.800	3.258	2.366	1.354	0.449	-0.159	-0.344	0.000
	VERTICAL CURVE (SEE NOTE 5)													

NOTES

1. ALL CAMBER ORDINATES ARE GIVEN IN INCHES.
2. STEEL IS CAMBER ORDINATE DUE TO THE STEEL BOX GIRDER, CROSS FRAMES AND OTHER MISCELLANEOUS STEEL ITEMS.
3. SLAB IS CAMBER ORDINATE DUE TO THE CONCRETE DECK SLAB, HAUNCHES AND STAY-IN-PLACE FORMS.
4. S.D.L. IS SUPERIMPOSED DEAD LOAD CONSISTING OF THE CONCRETE TRAFFIC RAILINGS.
5. SHOP DRAWINGS SHALL INDICATE VERTICAL CURVE CAMBER REQUIRED.
6. BOX GIRDER LENGTHS SHALL BE ADJUSTED FOR GIRDERS ON GRADE. SHOP DRAWINGS SHALL BE PREPARED ACCORDINGLY.
7. CAMBERED GIRDER LENGTHS SHALL BE ADJUSTED AND SOLE PLATES ARE TO BE PLACED ON THE CAMBERED GIRDER AND SHALL BE ALIGNED WITH THE ANCHORS AFTER THE DEAD LOAD DEFLECTION HAS OCCURRED. SHOP DRAWINGS SHALL BE PREPARED ACCORDINGLY.
8. CAMBER VALUES ARE BASED ON A GRID ANALYSIS.

SPAN 3 CAMBER - GIRDER 1 & 2

BRIDGE NO. XXXXXX

REVISIONS					
DATE	BY	DESCRIPTION	DATE	BY	DESCRIPTION

STRUCTURES DESIGN OFFICE
CENTRAL OFFICE
605 Suwannee Street, MS 33
Tallahassee, Florida 32399-0450

DRAWN BY: XXX MM-YY
CHECKED BY: XXX MM-YY
DESIGNED BY: XXX MM-YY
CHECKED BY: XXX MM-YY

STATE OF FLORIDA
DEPARTMENT OF TRANSPORTATION

ROAD NO.	COUNTY	FINANCIAL PROJECT ID

SHEET TITLE: CAMBER DIAGRAM EXAMPLE 2
CURVED STEEL BOX GIRDER (SHEET 3 OF 4)

PROJECT NAME:

REF. DWG. NO.

SHEET NO.

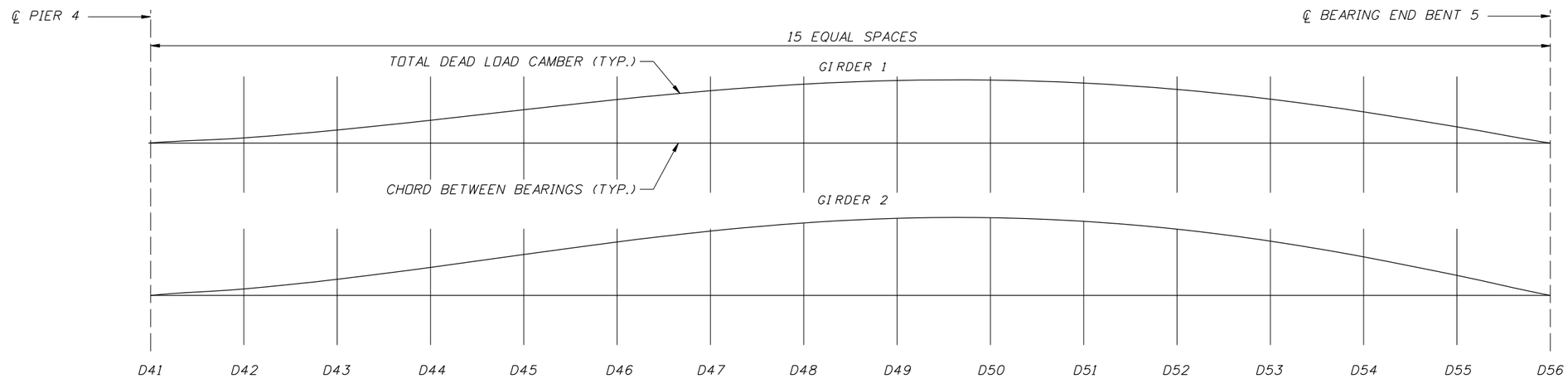

GIRDER	ITEM	SPAN 4															
		D41	D42	D43	D44	D45	D46	D47	D48	D49	D50	D51	D52	D53	D54	D55	D56
1	STEEL	0.000	0.293	0.694	1.161	1.651	2.113	2.502	2.783	2.930	2.928	2.773	2.466	2.011	1.424	0.739	0.000
	SLAB	0.000	0.417	1.100	1.966	2.926	3.866	4.690	5.315	5.678	5.744	5.493	4.926	4.044	2.877	1.498	0.000
	S. D. L.	0.000	0.067	0.170	0.295	0.428	0.553	0.659	0.736	0.777	0.778	0.737	0.656	0.535	0.379	0.197	0.000
	TOTAL DEAD LOAD CAMBER REQD.	0.000	0.777	1.964	3.422	5.005	6.532	7.851	8.834	9.385	9.450	9.003	8.048	6.590	4.680	2.434	0.000
	VERTICAL CURVE (SEE NOTE 5)																
2	STEEL	0.000	0.371	0.867	1.442	2.045	2.616	3.099	3.449	3.634	3.635	3.443	3.063	2.499	1.770	0.918	0.000
	SLAB	0.000	0.520	1.353	2.413	3.596	4.765	5.795	6.580	7.043	7.135	6.830	6.128	5.034	3.582	1.863	0.000
	S. D. L.	0.000	0.080	0.200	0.343	0.494	0.634	0.751	0.835	0.879	0.879	0.832	0.739	0.603	0.427	0.222	0.000
	TOTAL DEAD LOAD CAMBER REQD.	0.000	0.971	2.420	4.198	6.135	8.015	9.645	10.864	11.556	11.649	11.105	9.930	8.136	5.779	3.003	0.000
	VERTICAL CURVE (SEE NOTE 5)																

NOTES

1. ALL CAMBER ORDINATES ARE GIVEN IN INCHES.
2. STEEL IS CAMBER ORDINATE DUE TO THE STEEL BOX GIRDER, CROSS FRAMES AND OTHER MISCELLANEOUS STEEL ITEMS.
3. SLAB IS CAMBER ORDINATE DUE TO THE CONCRETE DECK SLAB, HAUNCHES AND STAY-IN-PLACE FORMS.
4. S.D.L. IS SUPERIMPOSED DEAD LOAD CONSISTING OF THE CONCRETE TRAFFIC RAILINGS.
5. SHOP DRAWINGS SHALL INDICATE VERTICAL CURVE CAMBER REQUIRED.
6. BOX GIRDER LENGTHS SHALL BE ADJUSTED FOR GIRDERS ON GRADE. SHOP DRAWINGS SHALL BE PREPARED ACCORDINGLY.
7. CAMBERED GIRDER LENGTHS SHALL BE ADJUSTED AND SOLE PLATES ARE TO BE PLACED ON THE CAMBERED GIRDER AND SHALL BE ALIGNED WITH THE ANCHORS AFTER THE DEAD LOAD DEFLECTION HAS OCCURRED. SHOP DRAWINGS SHALL BE PREPARED ACCORDINGLY.
8. CAMBER VALUES ARE BASED ON A GRID ANALYSIS.

SPAN 4 CAMBER - GIRDER 1 & 2

BRIDGE NO. XXXXXX

REVISIONS					
DATE	BY	DESCRIPTION	DATE	BY	DESCRIPTION

STRUCTURES DESIGN OFFICE
CENTRAL OFFICE
605 Suwannee Street, MS 33
Tallahassee, Florida 32399-0450

DRAWN BY: XXX MM-YY
CHECKED BY: XXX MM-YY
DESIGNED BY: XXX MM-YY
CHECKED BY: XXX MM-YY

STATE OF FLORIDA
DEPARTMENT OF TRANSPORTATION

ROAD NO.	COUNTY	FINANCIAL PROJECT ID

SHEET TITLE: CAMBER DIAGRAM EXAMPLE 2 CURVED STEEL BOX GIRDER (SHEET 4 OF 4)

PROJECT NAME:

REF. DWG. NO.

SHEET NO.

PERMANENT RETAINING WALL SYSTEM DATA TABLES

GEOTECHNICAL INFORMATION						Table Date 1-01-11
		Reinforced Soil & Random Backfill	Loose Fine Sand	Firm Fine Sand	Loose Clayey Fine Sand	Firm Clayey Fine Sand
Depth Below Existing Ground Line (ft.)	Wall No. 1	——	0'-6'	6'-33'	33'-39'	——
	Wall No. 2	——	0'-6'	6'-33'	33'-39'	——
Effective Unit Weight (pcf)		110 (moist weight in-place)	118	118	120	110
Cohesion (psf)		0	0	0	122	122
Internal Friction Angle		30°	30°	32°	0	0

NOTE:
If the unit weight and/or internal friction angle of the fill proposed by the Contractor differs from that shown above, the Project Engineer will contact both the District Geotechnical Engineer and the Wall Designer for a possible redesign.

RETAINING WALL VARIABLES				Table Date 1-01-11
Wall No.	Wall Settlement			
	Long Term Settlement (in.)	Short Term Settlement (in.)	Differential Settlement	
			Longitudinal (%) (ft./100ft.)	Transverse (in.)
1	2" to 3"	1" to 2"	0.50	N/A
2	2" to 3"	1" to 2"	0.50	N/A

NOTE:
Design walls for the settlements noted in the table.
Long term settlement is measured from the end of wall fill placement.
Transverse differential settlement is measured from the face of wall to the end of the soil reinforcement.

SOIL REINFORCEMENT LENGTHS FOR EXTERNAL STABILITY												Table Date 1-01-11
Wall No. 1	Wall Height (ft.)	0-11	12	13-14	15	16-17	18	19-20	21	22-23	24	25
	Reinforcement Length (ft.)	8	9	10	11	12	13	14	15	16	17	18
	Factored Bearing Resistance (psf)	1984	2295	2546	2857	3108	3419	3671	3980	4233	4543	4851
Wall No. 2	Wall Height (ft.)	0-11	12	13-14	15	16-17	18	19-20	21	22-23	24	25
	Reinforcement Length (ft.)	8	9	10	11	12	13	14	15	16	17	18
	Factored Bearing Resistance (psf)	1984	2295	2546	2857	3108	3419	3671	3980	4233	4543	4851

NOTES:
1. The reinforcement strap lengths shown above are the minimum lengths required for external stability. The reinforcement lengths used in the construction of the retaining walls will be the longer of that required for external or internal stability (determined by proprietary wall companies).
2. The Factored Bearing Resistances shown above are the critical (lowest) values from all the load cases analyzed using LRFD methodology.

NOTES:
1. Concrete facing panel surfaces treatment will be a fluted, trapezoid, V-groove, fractured rib ¾" on 1½" centers similar to Burke Form Liner, Pattern No. BG312 (Waterfall).
2. If required, the soil reinforcement and fasteners for the abutement back wall will be designed and furnished by proprietary wall company. The soil reinforcement will be designed to resist a factored horizontal load of 3.5 kips/ft of back wall width. The cost of soil reinforcement and fasteners will be included in the cost of the retaining wall system.
3. Applicable FDOT Wall Types for each wall location are listed below. See the Qualified Products List for approved wall systems and Design Standards Index No. 6020 for allowable wall type substitutions.

   Wall No. 1 & 2 - FDOT Wall Type 2B

4. Concrete for Coping and/or Junction Slab shall be Class II (f'c = 3,400 psi) without Calcium Nitrite.
5. See Design Standards Index No. 6020 for General Notes And Details.
6. Longitudinal dimensions shown in the plans are measured along the exterior face of the wall. Elevations shown are to the top of coping, top of leveling pad or top of wall footing.

ESTIMATED QUANTITIES			
WALL NO.	ITEM	UNIT	QUANTITY
1	Retaining Wall System, Permanent, Excluding Barrier	SF	15,497
	Concrete Traffic Railing With Junction Slab (32" F-Shape)	LF	934
2	Retaining Wall System, Permanent, Excluding Barrier	SF	7,798
	Concrete Traffic Railing With Junction Slab (32" F-Shape)	LF	770

BRIDGE NO. XXXXXX

REVISIONS					
DATE	BY	DESCRIPTION	DATE	BY	DESCRIPTION

STRUCTURES DESIGN OFFICE
CENTRAL OFFICE
605 Suwannee Street, MS 33
Tallahassee, Florida 32399-0450

DRAWN BY: XXX MM-YY
CHECKED BY: XXX MM-YY
DESIGNED BY: XXX MM-YY
CHECKED BY: XXX MM-YY

STATE OF FLORIDA
DEPARTMENT OF TRANSPORTATION

ROAD NO.	COUNTY	FINANCIAL PROJECT ID

SHEET TITLE: MSE WALLS EXAMPLE 1
PERMANENT MSE WALLS (SHEET 1 OF 5)

PROJECT NAME:

REF. DWG. NO.

SHEET NO.

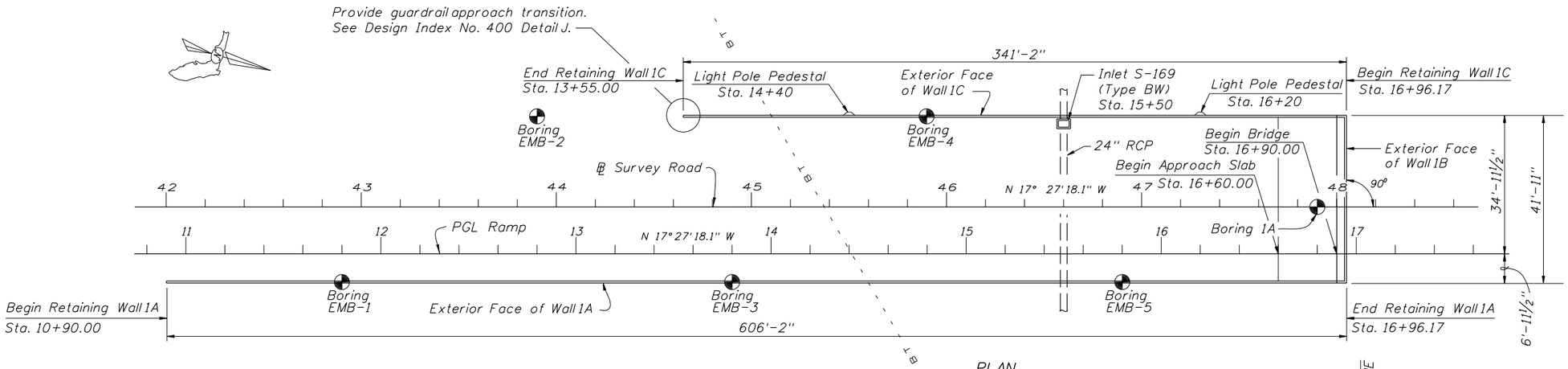

PLAN

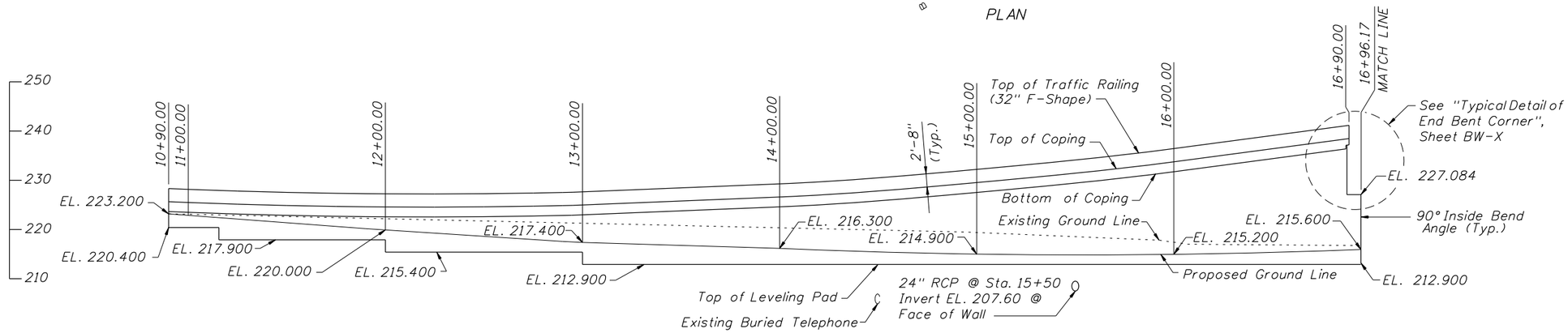

ELEVATION - WALL 1A

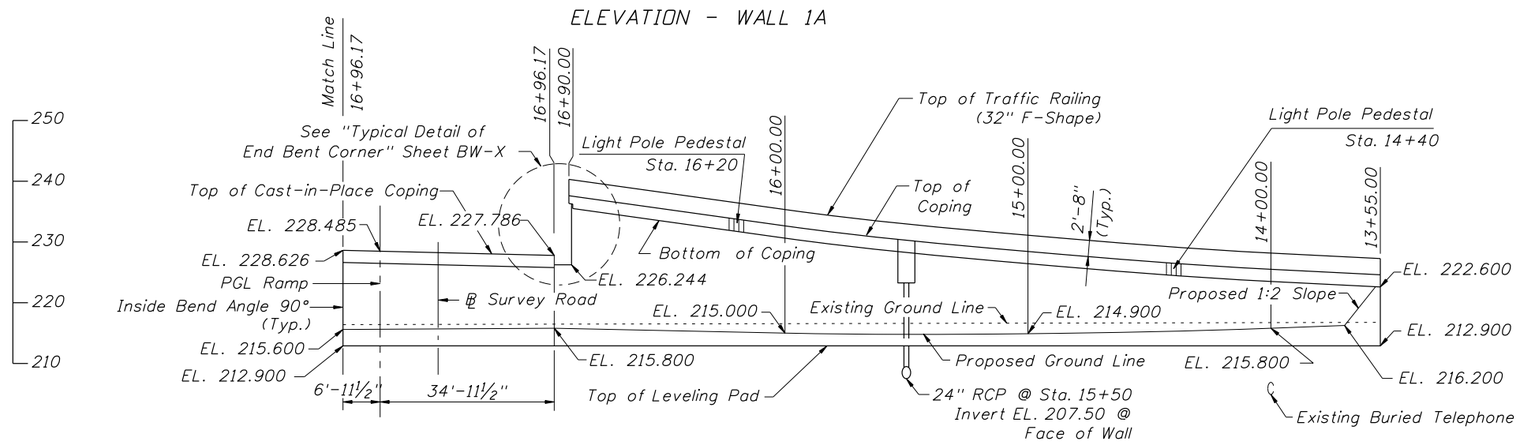

ELEVATION - WALLS 1B AND 1C

NOTES:

1. For Top of Coping Elevations see Sheet BW-X.
2. Top of Leveling Pad shall be a minimum of 2'-0" below Proposed Ground Line.
3. Provide ¾" open joints in Traffic Railing at a maximum of 90 ft. intervals.
4. ◔ indicates Soil Boring. See Sheets B-XX thru B-XX for boring data.
5. For Additional Information regarding Drainage Structures and Utility Locations, See Roadway Plans.

BRIDGE NO. XXXXXX

REVISIONS					
DATE	BY	DESCRIPTION	DATE	BY	DESCRIPTION

STRUCTURES DESIGN OFFICE
CENTRAL OFFICE
605 Suwannee Street, MS 33
Tallahassee, Florida 32399-0450

DRAWN BY: XXX MM-YY
CHECKED BY: XXX MM-YY
DESIGNED BY: XXX MM-YY
CHECKED BY: XXX MM-YY

STATE OF FLORIDA
DEPARTMENT OF TRANSPORTATION

ROAD NO.	COUNTY	FINANCIAL PROJECT ID

SHEET TITLE: MSE WALLS EXAMPLE 1
PERMANENT MSE WALLS (SHEET 2 OF 5)

PROJECT NAME:

REF. DWG. NO.

SHEET NO.

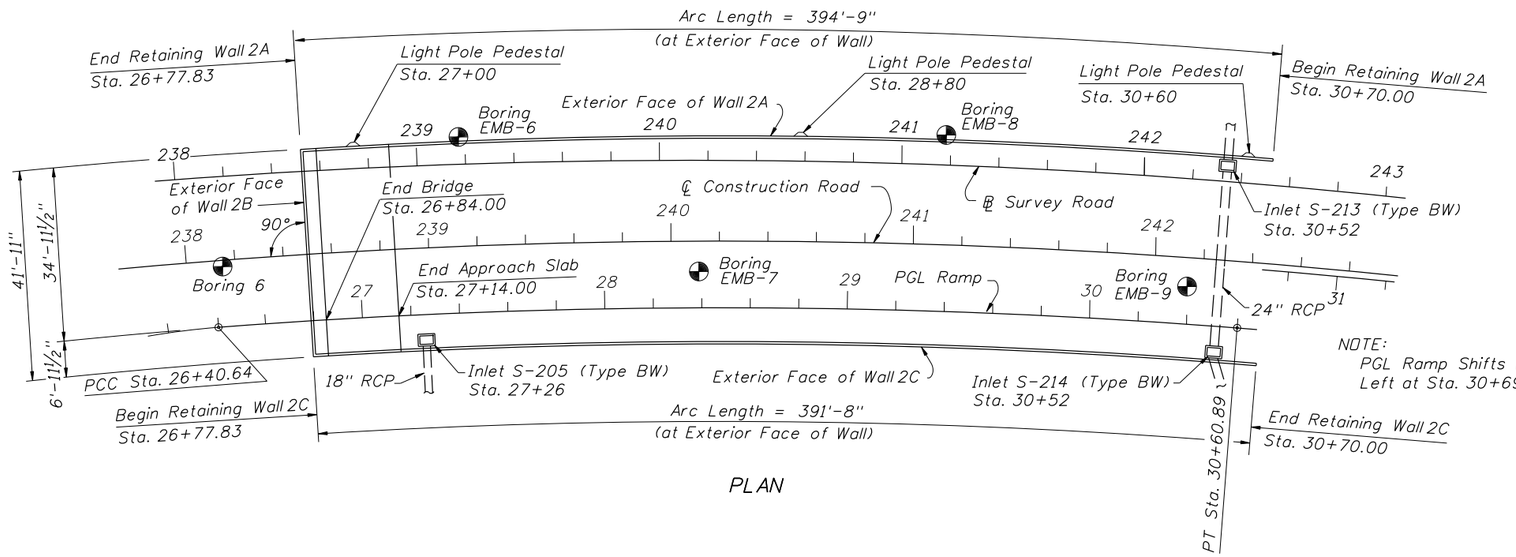

PLAN

NOTE:
PGL Ramp Shifts 12'-0"
Left at Sta. 30+69.23

HORIZONTAL CURVE DATA

PI Sta. = 28+50.87
Δ = 4°28'13" Rt.
D = 1°02'54"
T = 210.23'
L = 420.25'
R = 5,386.25'
PCC Sta. = 26+40.64
PT Sta. = 30+60.89

STATE PLANE COORDINATES

	N	E
PCC		
PI	(Not Available)	
PT		

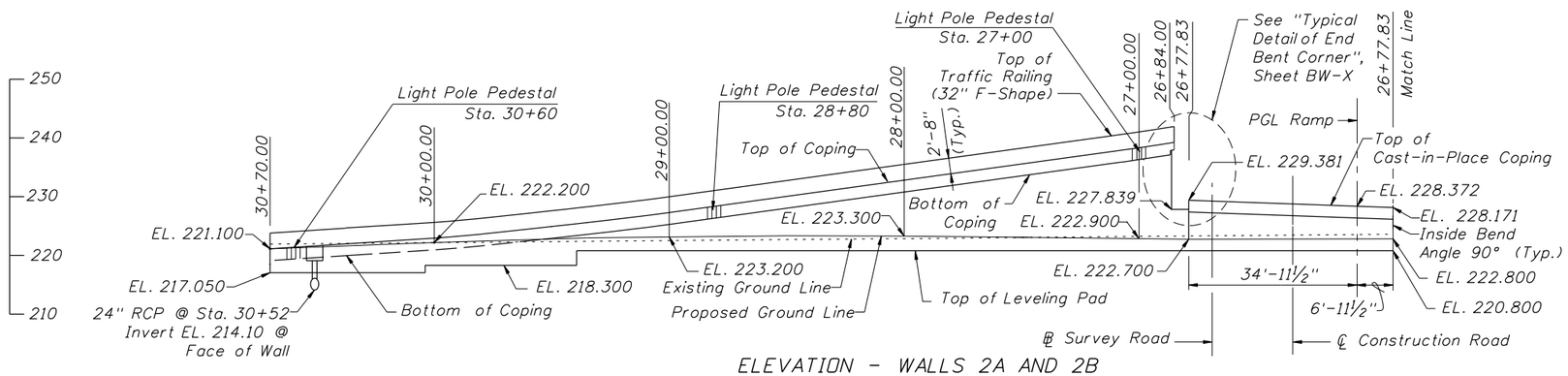

ELEVATION - WALLS 2A AND 2B

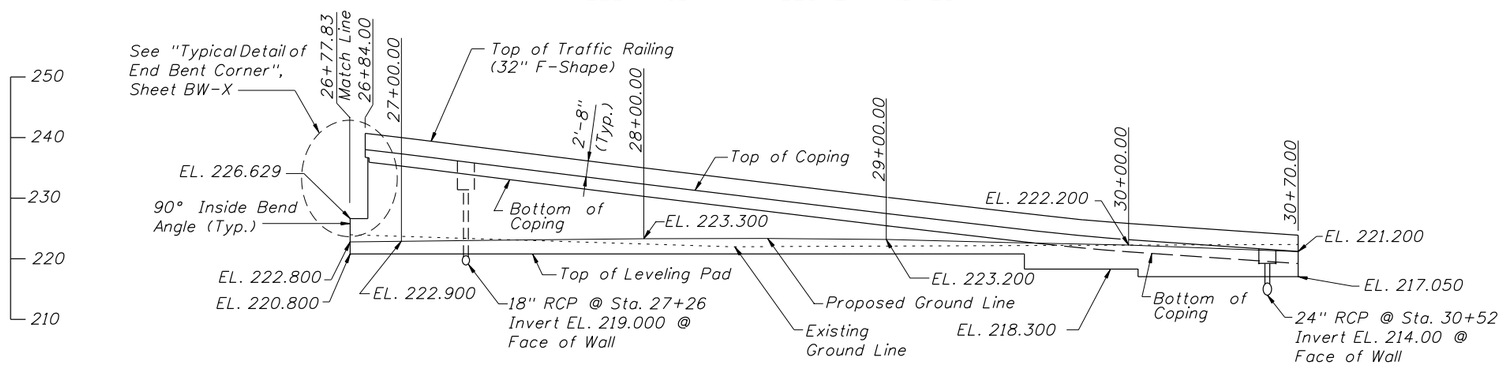

ELEVATION - WALL 2C

NOTES:

1. For Top of Coping Elevations see sheet BW-X.
2. Top of Leveling Pad shall be a minimum of 2'-0" below Proposed Ground Line.
3. Provide ¾" open joints in Traffic Railing at a maximum of 90 ft. intervals.
4. ◔ indicates Soil Boring. See Sheets B-XX thru B-XX for boring data.
5. For Additional Information regarding Drainage Structures and Utility Locations, See Roadway Plans.

BRIDGE NO. XXXXXX

REVISIONS					
DATE	BY	DESCRIPTION	DATE	BY	DESCRIPTION

STRUCTURES DESIGN OFFICE
CENTRAL OFFICE
605 Suwannee Street, MS 33
Tallahassee, Florida 32399-0450

DRAWN BY: XXX MM-YY
CHECKED BY: XXX MM-YY
DESIGNED BY: XXX MM-YY
CHECKED BY: XXX MM-YY

STATE OF FLORIDA
DEPARTMENT OF TRANSPORTATION

ROAD NO.	COUNTY	FINANCIAL PROJECT ID

SHEET TITLE: MSE WALLS EXAMPLE 1
PERMANENT MSE WALLS (SHEET 3 OF 5)

PROJECT NAME:

REF. DWG. NO.

SHEET NO.

WALL No. 1A

PGL Ramp Station	Exposed Face of Wall 1A Offset from PGL Ramp (ft.)	Top of Coping Elevation @ Wall 1A (ft.)
10+90.00	6.958	225.647
11+00.00	6.958	225.486
11+25.00	6.958	225.139
11+50.00	6.958	224.872
11+75.00	6.958	224.685
12+00.00	6.958	224.578
12+25.00	6.958	224.551
12+50.00	6.958	224.604
12+75.00	6.958	224.737
13+00.00	6.958	224.950
13+25.00	6.958	225.243
13+50.00	6.958	225.616
13+75.00	6.958	226.069
14+00.00	6.958	226.603
14+25.00	6.958	227.216
14+50.00	6.958	227.909
14+75.00	6.958	228.683
15+00.00	6.958	229.536
15+25.00	6.958	230.470
15+50.00	6.958	231.483
15+75.00	6.958	232.577
16+00.00	6.958	233.750
16+25.00	6.958	235.004
16+50.00	6.958	236.323
16+75.00	6.958	237.648
16+90.00	6.958	238.477
16+93.50	6.958	–

WALL No. 2A

PGL Ramp Station	Exposed Face of Wall 2A Offset from PGL Ramp (ft.)	Top of Coping Elevation @ Wall 2A (ft.)
26+78.83	34.958	–
26+84.00	34.958	239.246
27+00.00	34.958	238.327
27+25.00	34.958	236.948
27+50.00	34.958	235.569
27+75.00	34.958	234.191
28+00.00	34.958	232.812
28+25.00	34.958	231.433
28+50.00	34.958	230.055
28+75.00	34.958	228.676
29+00.00	34.958	227.297
29+25.00	34.958	226.058
29+50.00	34.958	224.927
29+75.00	34.958	223.891
30+00.00	34.958	222.950
30+25.00	34.958	222.109
30+50.00	34.958	221.525
30+70.00	22.958	221.121

WALL No. 1C

PGL Ramp Station	Exposed Face of Wall 1C Offset from PGL Ramp (ft.)	Top of Coping Elevation @ Wall 1C (ft.)
13+55.00	34.958	224.600
13+75.00	34.958	224.969
14+00.00	34.958	225.503
14+25.00	34.958	226.116
14+50.00	34.958	226.809
14+75.00	34.958	227.583
15+00.00	34.958	228.436
15+25.00	34.958	229.370
15+50.00	34.958	230.383
15+75.00	34.958	231.477
16+00.00	34.958	232.650
16+25.00	34.958	233.904
16+50.00	34.958	235.390
16+75.00	34.958	236.848
16+90.00	34.958	237.615

WALL No. 2C

PGL Ramp Station	Exposed Face of Wall 2C Offset from PGL Ramp (ft.)	Top of Coping Elevation @ Wall 2C (ft.)
26+78.83	6.958	–
26+84.00	6.958	238.015
27+00.00	6.958	237.310
27+25.00	6.958	236.055
27+50.00	6.958	234.804
27+75.00	6.958	233.554
28+00.00	6.958	232.314
28+25.00	6.958	231.102
28+50.00	6.958	229.890
28+75.00	6.958	228.678
29+00.00	6.958	227.466
29+25.00	6.958	226.258
29+50.00	6.958	225.127
29+75.00	6.958	224.091
30+00.00	6.958	223.150
30+25.00	6.958	222.307
30+50.00	6.958	221.656
30+70.00	18.958	221.201

NOTES:
1. Offsets are given to the exterior face of the proprietary wall.

2. For proposed ground elevations for all walls, see Sheets BW-X and BW-X.

BRIDGE NO. XXXXXX

REVISIONS					
DATE	BY	DESCRIPTION	DATE	BY	DESCRIPTION

STRUCTURES DESIGN OFFICE
CENTRAL OFFICE
605 Suwannee Street, MS 33
Tallahassee, Florida 32399-0450

DRAWN BY: XXX MM-YY
CHECKED BY: XXX MM-YY
DESIGNED BY: XXX MM-YY
CHECKED BY: XXX MM-YY

STATE OF FLORIDA
DEPARTMENT OF TRANSPORTATION

ROAD NO.	COUNTY	FINANCIAL PROJECT ID

SHEET TITLE: MSE WALLS EXAMPLE 1
PERMANENT MSE WALLS (SHEET 4 OF 5)

PROJECT NAME:

REF. DWG. NO.

SHEET NO.

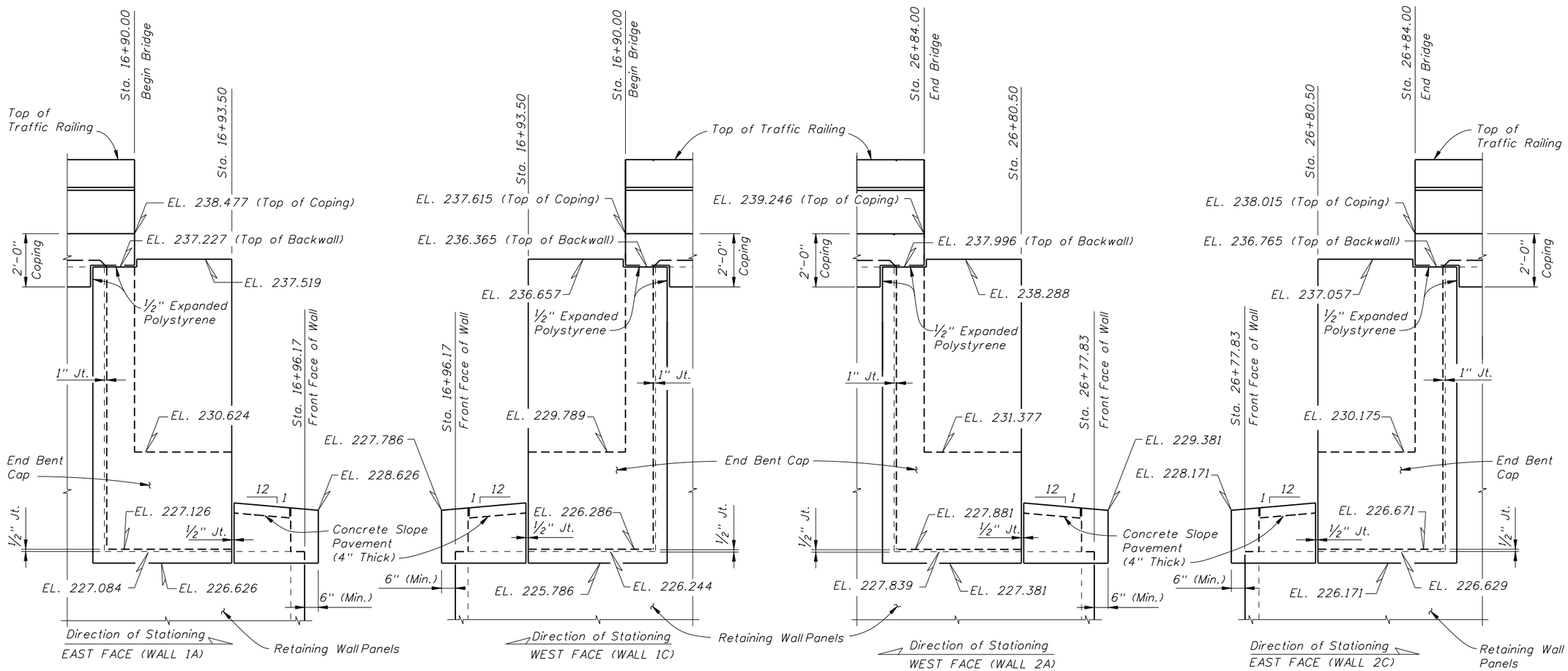

END BENT NO. 1

END BENT NO. 7

NOTE:
½" and 1" Joints to be Preformed Joint Filler, unless otherwise shown.

BRIDGE NO. XXXXXX

REVISIONS					
DATE	BY	DESCRIPTION	DATE	BY	DESCRIPTION

STRUCTURES DESIGN OFFICE
CENTRAL OFFICE
605 Suwannee Street, MS 33
Tallahassee, Florida 32399-0450

DRAWN BY: XXX MM-YY
CHECKED BY: XXX MM-YY
DESIGNED BY: XXX MM-YY
CHECKED BY: XXX MM-YY

STATE OF FLORIDA
DEPARTMENT OF TRANSPORTATION

ROAD NO.	COUNTY	FINANCIAL PROJECT ID

SHEET TITLE: MSE WALLS EXAMPLE 1
PERMANENT MSE WALLS (SHEET 5 OF 5)

PROJECT NAME:

REF. DWG. NO.

SHEET NO.

TEMPORARY RETAINING WALL SYSTEM DATA TABLES

GEOTECHNICAL INFORMATION

Table Date 1-01-11

		Reinforced Soil & Random Backfill	Loose Fine Sand	Firm Fine Sand	Loose Clayey Fine Sand	Firm Clayey Fine Sand
Depth Below Existing Ground Line (ft.)	Wall No. 1	—·—	0'-9'	9'-23'	23'-37'	37'-45'
	Wall No. 2	—·—	0'-9'	9'-23'	23'-37'	37'-45'
Effective Unit Weight (pcf)		110	118	118	120	110
Cohesion (psf)		0	0	0	0	0
Internal Friction Angle		30°	34°	34°	35°	30°
Depth Below Existing Ground Line (ft.)	Wall No. 3	—·—	0'-10'	10'-15'	15'-17'	17'-45'
	Wall No. 4	—·—	0'-10'	10'-15'	15'-17'	17'-45'
Effective Unit Weight (pcf)		110	116	118	120	116
Cohesion (psf)		0	0	0	41.77	0
Internal Friction Angle		30°	32°	34°	0	34°

NOTE:
If the unit weight and/or internal friction angle of the fill proposed by the Contractor differs from that shown above, the Project Engineer will contact both the District Geotechnical Engineer and the Wall Designer for a possible redesign.

RETAINING WALL VARIABLES

Table Date 1-01-11

Wall No.	Wall Settlement: Long Term Settlement (in.)	Wall Settlement: Short Term Settlement (in.)	Wall Settlement: Differential Settlement (%) (ft./100 ft.)	Air Contaminants Classification
1 & 2	½"	⅜"	0.50	Extremely Aggressive
3 & 4	½"	¼"	0.50	Extremely Aggressive

NOTE:
Design walls for the settlements noted in the table.
Long term settlement is measured from the beginning of wall construction.

SOIL REINFORCEMENT LENGTHS FOR EXTERNAL STABILITY

Table Date 1-01-11

Walls 1 thru 4	Wall Height (ft.)	5'-0"	5'-6"	6'-0"	6'-6"	7'-0"	7'-6"	·	·	·	·
	Reinforcement Length (ft.)	7'-0"	7'-0"	7'-0"	7'-0"	7'-0"	7'-0"	·	·	·	·
	Factored Bearing Resistance (psf)	1082	1241	1426	1648	1454	1623	·	·	·	·

NOTES:
1. The reinforcement strap lengths shown above are the minimum lengths required for external stability. The reinforcement lengths used in the construction of the retaining walls will be the longer of that required for external or internal stability (determined by proprietary wall companies).
2. The Factored Bearing Resistances shown above are the critical (lowest) values from all the load cases analyzed using LRFD methodology.

NOTES:
1. See the Qualified Products List for approved Wall Systems (Type 3).
2. See Design Standards Index No. 6030 for General Notes and Details

ESTIMATED QUANTITIES

WALL NO.	ITEM	UNIT	QUANTITY
1	Retaining Wall System, Temporary, Excluding Barrier	SF	1,422
2	Retaining Wall System, Temporary, Excluding Barrier	SF	1,328
3	Retaining Wall System, Temporary, Excluding Barrier	SF	2,380
4	Retaining Wall System, Temporary, Excluding Barrier	SF	2,586

WALL No. 1

Station	Exposed Face of Wall 1 Offset from ℄ Const. (ft.)	Top of Wall & Proposed Ground Elevation @ Wall 1 (ft.)
659+63.30	17.666	125.105
660+00.00	17.666	124.830
660+50.00	17.666	124.456
661+00.00	17.666	124.082
661+50.00	17.666	123.708
662+00.00	17.666	123.334
662+50.00	17.666	122.960
663+00.00	17.666	122.586
663+50.00	17.666	122.212
663+83.63	17.666	121.960
664+18.38	17.666	121.388

WALL No. 2

Station	Exposed Face of Wall 1 Offset from ℄ Const. (ft.)	Top of Wall & Proposed Ground Elevation @ Wall 2 (ft.)
664+38.30	17.666	121.043
664+03.55	17.666	121.634
664+00.00	17.666	121.666
663+50.00	17.666	122.118
663+00.00	17.666	122.570
662+50.00	17.666	123.022
662+00.00	17.666	123.474
661+50.00	17.666	123.926
661+00.00	17.666	124.378
660+50.00	17.666	124.830
660+00.00	17.666	125.282
659+63.30	17.666	125.614

WALL No. 3

Station	Exposed Face of Wall 1 Offset from ℄ Const. (ft.)	Top of Wall & Proposed Ground Elevation @ Wall 3 (ft.)
674+21.26	17.666	90.259
674+00.00	17.666	90.975
673+50.00	17.666	92.659
673+00.00	17.666	94.343
672+50.00	17.666	96.027
672+00.00	17.666	97.711
671+50.00	17.666	99.395
671+00.00	17.666	101.078
670+50.00	17.666	102.762
670+00.00	17.666	104.446
669+50.00	17.666	106.130
669+00.00	17.666	107.814
668+50.00	17.666	109.498
668+00.00	17.666	111.182
667+50.00	17.666	112.866
667+00.00	17.666	114.550
666+50.00	17.666	116.234
666+10.35	17.666	117.569
665+75.60	17.666	118.346

WALL No. 4

Station	Exposed Face of Wall 1 Offset from ℄ Const. (ft.)	Top of Wall & Proposed Ground Elevation @ Wall 4 (ft.)
665+55.68	17.666	118.770
665+90.43	17.666	118.015
666+00.00	17.666	117.705
666+50.00	17.666	116.088
667+00.00	17.666	114.471
667+50.00	17.666	112.854
668+00.00	17.666	111.237
668+50.00	17.666	109.619
669+00.00	17.666	108.002
669+50.00	17.666	106.385
670+00.00	17.666	104.768
670+50.00	17.666	103.150
671+00.00	17.666	101.533
671+50.00	17.666	99.916
672+00.00	17.666	98.299
672+50.00	17.666	96.681
673+00.00	17.666	95.064
673+50.00	17.666	93.447
674+00.00	17.666	91.830
674+21.26	17.666	91.142

BRIDGE NO. XXXXXX

REVISIONS

DATE	BY	DESCRIPTION	DATE	BY	DESCRIPTION

STRUCTURES DESIGN OFFICE
CENTRAL OFFICE
605 Suwannee Street, MS 33
Tallahassee, Florida 32399-0450

DRAWN BY: XXX MM-YY
CHECKED BY: XXX MM-YY
DESIGNED BY: XXX MM-YY
CHECKED BY: XXX MM-YY

STATE OF FLORIDA
DEPARTMENT OF TRANSPORTATION

ROAD NO.	COUNTY	FINANCIAL PROJECT ID

SHEET TITLE: MSE WALLS EXAMPLE 2 TEMPORARY MSE WALLS (SHEET 1 OF 3)

PROJECT NAME:

REF. DWG. NO.

SHEET NO.

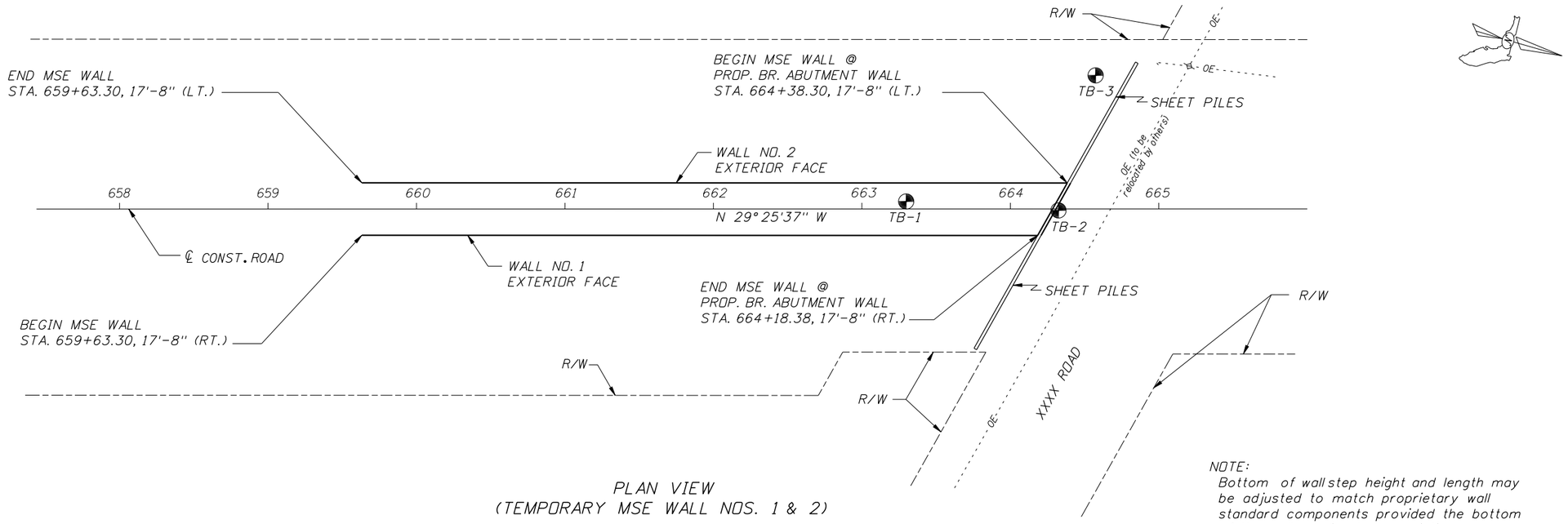

PLAN VIEW
(TEMPORARY MSE WALL NOS. 1 & 2)

NOTE:
Bottom of wall step height and length may be adjusted to match proprietary wall standard components provided the bottom of the wall remains below existing ground.

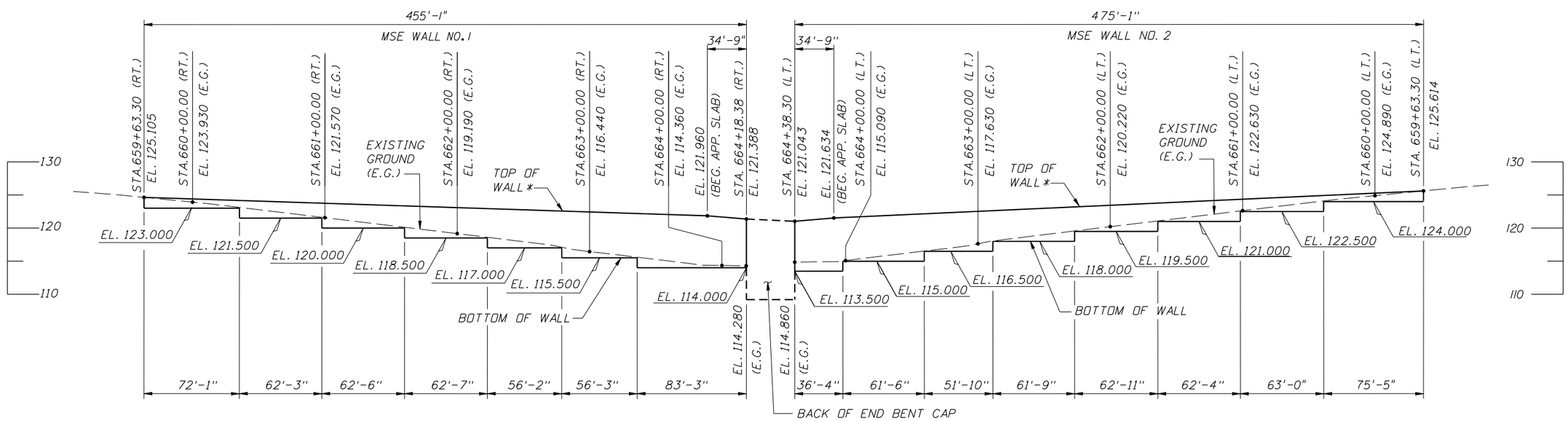

* SEE SHEET 1 OF 3 FOR TABLES OF TOP OF WALL ELEVATIONS

EXPANDED ELEVATION VIEW
(TEMPORARY MSE WALL NOS. 1 & 2, LOOKING AT FRONT FACE OF WALL)

BRIDGE NO. XXXXXX

REVISIONS					
DATE	BY	DESCRIPTION	DATE	BY	DESCRIPTION

STRUCTURES DESIGN OFFICE
CENTRAL OFFICE
605 Suwannee Street, MS 33
Tallahassee, Florida 32399-0450

DRAWN BY: XXX MM-YY
CHECKED BY: XXX MM-YY
DESIGNED BY: XXX MM-YY
CHECKED BY: XXX MM-YY

STATE OF FLORIDA
DEPARTMENT OF TRANSPORTATION

ROAD NO.	COUNTY	FINANCIAL PROJECT ID

SHEET TITLE: MSE WALLS EXAMPLE 2
TEMPORARY MSE WALL (SHEET 2 OF 3)

PROJECT NAME:

REF. DWG. NO.

SHEET NO.

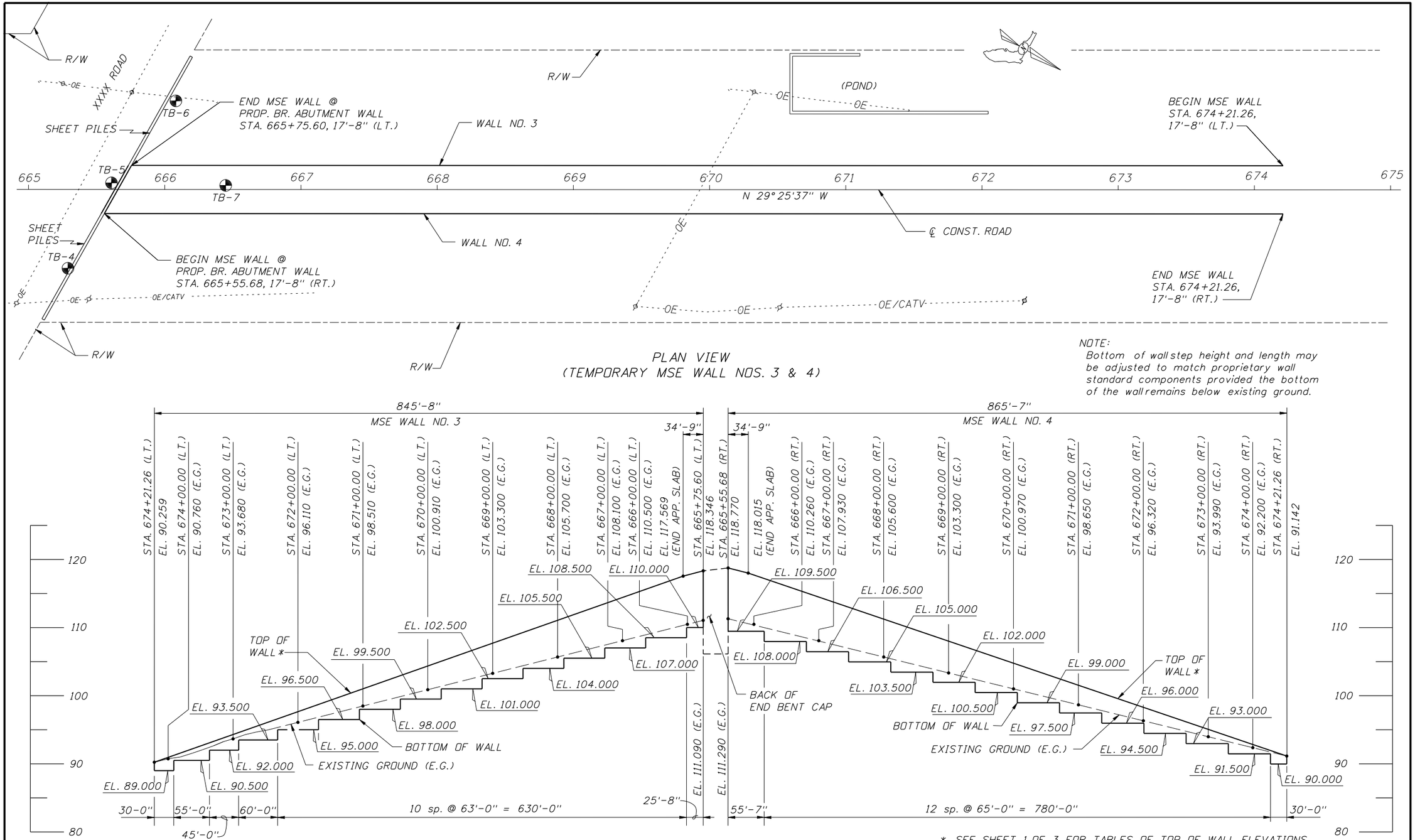

REVISIONS					
DATE	BY	DESCRIPTION	DATE	BY	DESCRIPTION

STRUCTURES DESIGN OFFICE
CENTRAL OFFICE
605 Suwannee Street, MS 33
Tallahassee, Florida 32399-0450

DRAWN BY: XXX MM-YY
CHECKED BY: XXX MM-YY
DESIGNED BY: XXX MM-YY
CHECKED BY: XXX MM-YY

STATE OF FLORIDA
DEPARTMENT OF TRANSPORTATION

ROAD NO.	COUNTY	FINANCIAL PROJECT ID

SHEET TITLE: MSE WALLS EXAMPLE 2
TEMPORARY MSE WALLS (SHEET 3 OF 3)

PROJECT NAME:

REF. DWG. NO.

SHEET NO.