FLORIDA DEPARTMENT OF TRANSPORTATION

STRUCTURES DETAILING MANUAL

FDOT STRUCTURES MANUAL
VOLUME 2
JANUARY 2011

Structures Design
Florida's Transportation Engineers

Table of Contents

Table of Contents i
Introduction I-1
I.1 General I-1
I.2 Format I-1
I.3 Coordination I-2
I.4 Quantity Calculations I-2
I.5 Summary of Bridge Pay Items I-2
I.6 Phase Submittal Requirements I-3
1 Drafting and Printing Requirements 1-1
1.1 General 1-1
1.2 Drafting Requirements (Rev. 01/11) 1-1
1.3 Quality Assurance 1-1
1.4 Drawing Revisions 1-1
2 Detailing Instructions 2-1
2.1 Detailing Aids 2-1
2.2 Structures Identification Numbers 2-1
2.3 Bridge Lengths and Horizontal Control 2-2
2.4 Financial Project Number and Federal-Aid Project Number 2-2
2.5 Initial Block 2-2
2.6 Title Block 2-2
2.7 Orthographic Projection 2-3
2.8 Views 2-3
2.9 Scales 2-3
2.10 Strength and Contrast of Lines 2-4
2.11 Dimensioning 2-4
2.11.1 General 2-4
Figure 2.11.1-1 Stirrup Bar Detail 2-4
2.11.2 Dimensions and Text 2-5
Figure 2.11.2-1 Compressed Dimensions 2-5
Figure 2.11.2-2 Text Orientation 2-6
Figure 2.11.2-3 Dimensions 2-7
Figure 2.11.2-4 Angles 2-7
Figure 2.11.2-5 Radii 2-8
Figure 2.11.2-6 Bevel Symbol Detail 2-8
2.11.3 Dimensioning Precision 2-9
2.12 Symbols and Patterns 2-9
2.13 Architectural Treatment 2-9
2.14 Skew Angle and Complementary Skew Angle 2-10
Figure 2.14-1 Skew Angle and Complementary Angle 2-10
2.15 Section Cut Line and Identification 2-10
2.16 Enlarged Details 2-10
2.17 Using Standard Abbreviations 2-10
2.18 Arrows 2-11

3 Composition of Plan Set 3-1
3.1 Sheet Numbers for Bridges and Walls 3-1
3.2 Sheet Titles 3-2
3.3 Sheet References for Multiple Bridges and/or Structures 3-2
3.4 Sheet Numbers on Projects with Alternate Structure Types 3-2
3.5 Reference Drawing Number Box 3-2
3.6 Phase Submittal Requirements 3-2
3.7 Use of FDOT Design Standards 3-2
3.8 Existing Plans 3-3
4 Concrete Components 4-1
4.1 General 4-1
4.2 Items Embedded in Concrete Components 4-1
4.3 Reinforcing Steel (Rev. 01/11) 4-1
Figure 4.3-1 Reinforcing Bar Callout Detail 4-2
4.3.1 Maximum Bar Spacing 4-2
4.3.2 Minimum Bar Spacing 4-2
4.3.3 Minimum Concrete Cover 4-2
4.3.4 Fit and Clearance 4-3
4.3.5 Bar Splicing 4-3
4.3.6 Dowels 4-4
4.3.7 Bars in Section 4-4
4.3.8 Hook Bars 4-4
4.3.9 Maximum Reinforcing Bar Lengths 4-4
4.3.10 Reinforcing Bar Lists 4-4
4.3.11 Preferred Maximum Reinforcing Steel Bar Sizes 4-5
Table 4.3.11-1 Preferred Maximum Reinforcing Steel Bar Sizes 4-5
4.4 Concrete Surface Finishes 4-6
Figure 4.4-1 Class 5 Finish at Grade Separation Structures 4-6
Figure 4.4-2 Class 5 Finish at Waterway Crossings and R.R. Separation Structures 4-7
5 General Notes and Bid Item Notes 5-1
5.1 General Notes (Rev. 01/11) 5-1
5.2 Typical General Notes (Rev. 01/11) 5-1
5.3 Typical Steel General Notes 5-5
5.4 Typical Pay Item Notes 5-6
6 Slope Protection 6-1
6.1 General (Rev. 01/11) 6-1
6.2 Grade Separations 6-1
6.3 Water Crossings 6-1
6.4 Dual Bridges 6-1
7 Plan and Elevation 7-1
7.1 General 7-1
7.2 Plan and Elevation Drawing - General 7-1
7.3 Plan and Elevation Drawing - Plan View 7-2
7.4 Plan and Elevation Drawing - Elevation View 7-3

8 Bridge Hydraulic Recommendation Sheet 8-1
8.1 Purpose 8-1
8.2 General Requirements and Design Procedures 8-1
9 Construction Sequence for Bridge Widening and Phased Construction . . . 9-1
9.1 General (Rev. 01/11) 9-1
9.2 Construction Sequence Drawings (Rev. 01/11) 9-1
9.3 Construction Sequencing Considerations (Rev. 01/11) 9-2
Figure 9.3-1 Typical Dimensions Required for Construction Sequence Drawings 9-4
10 Report of Core Borings 10-1
10.1 General 10-1
10.2 Scales 10-1
10.3 Drawing Content 10-1
10.4 Title Block 10-2
11 Foundation Layout 11-1
11.1 General 11-1
11.2 Foundation Layout Drawing (Rev. 01/11) 11-1
11.3 Foundation Layout Design Considerations (Rev. 01/11) 11-3
11.4 Pile Data Table 11-4
11.5 Drilled Shaft Data Table 11-5
12 Substructure - Bents 12-1
12.1 General 12-1
12.2 Drawings and Details - General (Rev. 01/11) 12-1
12.3 Drawings and Details - End Bent 12-3
12.4 Drawings and Details - Intermediate Bent 12-3
12.5 Design Considerations - General (Rev. 01/11) 12-4
Figure 12.5-1 Minimum Cap Width for Caps with Double Bearings 1 of 2 . . . 12-5
Figure 12.5-2 Minimum Cap Width for Caps with Double Bearings 2 of 2 . . . 12-5
Figure 12.5-3 Minimum Cap Width When Pile Size Controls 12-6
Figure 12.5-4 Minimum Cap Width When Shaft Size Controls 12-6
12.6 Design Considerations - End Bent (Rev. 01/11) 12-7
Figure 12.6-1 End Bent Cheekwall Detail at MSE Wall 12-7
12.7 Design Considerations - Intermediate Bent 12-8
13 Substructure - Piers 13-1
13.1 General 13-1
13.2 Pier Drawings and Details - General (Rev. 01/11) 13-1
Figure 13.2-1 Hammerhead Pier Rustication 13-2
13.3 Pier Drawings and Details - Plan View 13-2
13.4 Pier Drawings and Details - Elevation 13-3
13.5 Pier Drawings and Details - Footings (Rev. 01/11) 13-3
Figure 13.5-1 Tension Pile Details (1 of 3) 13-4
Figure 13.5-2 Tension Pile Details (2 of 3) 13-4
Figure 13.5-3 Tension Pile Details (3 of 3) 13-5
Figure 13.5-4 Minimum Footing Depth on Sloped Fill 13-5

13.6 Pier Drawings and Details - Reinforcing Details 13-5
Figure 13.6-1 Preferred Column Tie Detail 13-6
Figure 13.6-2 Variable-Width Pier Reinforcing Details 13-7
Figure 13.6-3 Circular Column Cross Section 13-7
13.7 Pier Design Considerations - General (Rev. 01/11) 13-8
Figure 13.7-1 Cap Steel Details. 13-8
Figure 13.7-2 Drilled Shaft Reinforcing Details 13-9
Figure 13.7-3 Pier Cap Reinforcing Details 13-9
Figure 13.7-4 Anchor Bolt Details for Composite Neoprene Bearings 13-10
Figure 13.7-5 Anchor Bolt Detail for Pot Bearings - Alternative A 13-11
Figure 13.7-6 Anchor Bolt Detail for Pot Bearings - Alternative B 13-11
13.8 Pier Design Considerations - Pier Aesthetics (Rev. 01/11) 13-12
Figure 13.8-1 Pier Cap Cheekwall Details. 13-12
Figure 13.8-2 Example Pier Shapes 13-13
Figure 13.8-3 Pier Families 13-14
Figure 13.8-4 Rustication Detail At Working Point Of Rotated Pier Cap 13-15
Figure 13.8-5 Example Pier Shapes for Straight Bridges
or Constant Cross Slopes. 13-16
13.9 Pier Design Considerations - Hammerhead Piers 13-17
Figure 13.9-1 Pier Cap Details (1 of 4) 13-17
Figure 13.9-2 Pier Cap Details (2 of 4) 13-17
Figure 13.9-3 Pier Cap Details (3 of 4) 13-18
Figure 13.9-4 Pier Cap Details (4 of 4) 13-18
Figure 13.9-5 Staggered Column Alternate 13-19
13.10 Pier Design Considerations - Integral Piers (Rev. 01/11) 13-19
Figure 13.10-1 Steel Integral Pier Cap Details 13-20
Figure 13.10-2 Integral Pier Cap Steel Girder Details 13-21
Figure 13.10-3 Concrete Integral Pier Cap Details 13-22
13.11 Pier Design Considerations - Straddle Piers (Rev. 01/11). 13-23
13.12 Pier Design Considerations - C-Piers (Rev. 01/11) 13-23
13.13 Pier Design Considerations - Post-Tensioning (Rev. 01/11) 13-24
Figure 13.13-1 P/T Duct Layout Using X,Y Coordinates 13-24
14 Finish Grade Elevations 14-1
14.1 General 14-1
14.2 Accuracy (Rev. 01/11) 14-1
14.3 Finish Grade Elevations 14-1
14.4 Finish Grade Elevations-Schematic Plan View (Rev. 01/11). 14-2
14.5 Finish Grade Elevations - Typical Section View 14-2
15 Superstructure - Concrete Elements 15-1
15.1 General 15-1
15.2 Superstructure Drawings - Framing Plan (Rev. 01/11) 15-1
15.3 Superstructure Drawings - Plan (Rev. 01/11) 15-2
15.4 Superstructure Drawings - Section (Rev. 01/11) 15-3
15.5 Superstructure Drawings - Details (Rev. 01/11) 15-4
Figure 15.5-1 Thickened Slab End Details 15-5

Figure 15.5-2 Thickened Slab End at Interior Support 15-6
15.6 Deck Drains (Rev. 01/11) 15-6
15.7 Superstructure Design Considerations - General (Rev. 01/11) 15-6
15.8 Superstructure Design Considerations - Prestressed Beams (Rev. 01/11). . 15-7
Figure 15.8-1 Concrete End Diaphragm Details 15-8
Figure 15.8-2 Concrete End Diaphragm Reinforcement Details 15-9
Figure 15.8-3 S.I.P. Form Details for Prestressed Concrete Beams 15-10
Figure 15.8-4 Squared Beam End Details – Exp. Joint at Int. Support 15-11
Figure 15.8-5 Squared Beam End Details-Cont. Deck at Int. Support 15-12
Figure 15.8-6 Squared Beam End Details - Expansion Joint at End Bent. . . . 15-13
15.9 Superstructure Design Considerations - Steel Girders (Rev. 01/11) 15-14
Figure 15.9-1 Edge Beam Detail - Steel Girders 15-14
Figure 15.9-2 S.I.P. Form Details for Steel I-Girders (Section) 15-15
Figure 15.9-3 S.I.P. Form Details for Steel I-Girders (End Detail). 15-15
Figure 15.9-4 S.I.P. Form Details for Steel Box Girders (Section) 15-16
Figure 15.9-5 S.I.P. Form Details for Steel Box Girders (End Detail) 15-16
16 Structural Steel Girders 16-1
16.1 General 16-1
16.2 Shop Drawings 16-1
16.3 Framing Plan Drawings and Details - Steel I-Girders 16-1
Figure 16.3-1 I-Girder Framing Plan 16-2
Figure 16.3-2 Framing Plan Details - Large Skews 16-2
Figure 16.3-3 Framing Plan at Gore Area 16-3
Figure 16.3-4 Framing Plan at Tapered Ramp 16-4
16.4 Framing Plan Drawings and Details - Steel Box Girders 16-5
Figure 16.4-1 Curved Box Girder Framing Plan 16-6
16.5 Girder Elevation 16-7
Figure 16.5-1 Typical Girder Elevation 16-8
16.6 I-Girder Stiffener Details (Rev. 01/11) 16-9
Figure 16.6-1 Weld Termination Detail 16-9
Figure 16.6-2 Tab Plate Detail. 16-10
Figure 16.6-3 Standard Clip Options 16-10
Figure 16.6-4 Girder Details 16-10
16.7 Crossframe Details - I-Girders 16-11
Figure 16.7-1 Typical I-Girder Crossframe Details 16-11
Figure 16.7-2 End Crossframe / Diaphragm Connection Details. 16-12
16.8 Crossframe & Diaphragm Details - Box Girders (Rev. 01/11) 16-13
Figure 16.8-1 Steel Box Girder Cross Section Basic Geometry 16-14
Figure 16.8-2 Steel Box Girder Pier Diaphragms 16-14
Figure 16.8-3 Steel Box Girder Internal Crossframe 16-15
Figure 16.8-4 Steel Box Girder Crossframe with Longitudinal Stiffener 16-15
Figure 16.8-5 Steel Box Girder Intermediate Diaphragm Connection 16-16
16.9 Girder Deflection and Camber Diagrams (Rev. 01/11) 16-16
Figure 16.9-1 I-Girder Camber Diagram 16-17
Figure 16.9-2 Box Girder DL Deflection Diagram 16-18

16.10 Welds 16-19
16.11 Miscellaneous Details (Rev. 01/11) 16-19
Figure 16.11-1 Box Girder Bottom Flange Stiffener Transition and Termination Details 16-21
Figure 16.11-2 Web Splice Detail 16-22
Figure 16.11-3 Top Flange Shear Connector Detail 16-22
Figure 16.11-4 Box Girder Section with Drain Hole Detail. 16-23
Figure 16.11-5 Shop Splice Details 16-23
Figure 16.11-6 Phased Construction Steel Detail at Closure Pour 16-24
17 Typical Section 17-1
17.1 General 17-1
17.2 Typical Section - Drawing and Details 17-1
18 ADA Requirements 18-1
18.1 General 18-1
18.2 Ramps and Handrails - Grades Greater than 5% 18-1
Figure 18.2-1 Maximum Slopes and Landing Spacing and Dimensions for Ramps 18-3
Figure 18.2-2 ADA Handrail Detail 18-3
Figure 18.2-3 Bridge Section At Sidewalk With 32" "F" Shape Barrier (Modified) 18-4
18.3 Drainage Grates or Scuppers 18-5
Figure 18.3-1 ADA Surface Requirements 18-5
18.4 Expansion Joints on Bridges. 18-5
18.5 Cross Slopes Greater Than 2% 18-5
Figure 18.5-1 Section at Sidewalk With Bridge Cross Slope Greater Than 2% (1 of 3) 18-6
Figure 18.5-2 Section at Sidewalk With Bridge Cross Slope Greater Than 2% (2 of 3) 18-6
Figure 18.5-3 Section at Sidewalk With Bridge Cross Slope Greater Than 2% (3 of 3) 18-7
19 Retaining Walls (Rev. 01/11). 19-1
19.1 General 19-1
19.2 Wall Control Drawings. 19-1
19.2.1 Wall Control Drawings - Plan Views 19-1
Figure 19.2.1-1 Typical Wall Naming Convention 19-2
19.2.2 Wall Control Drawings - Elevation Views 19-3
19.2.3 Wall Control Drawings - General Notes and Details 19-4
19.3 Cast in Place Cantilever Walls 19-5
19.4 Gravity Walls 19-5
19.5 Permanent Sheet Pile Walls 19-5
19.5.1 Concrete Sheet Pile Walls. 19-5
Figure 19.5.1-1 Section Through Sheet Pile Wall Cap 19-5
Figure 19.5.1-2 Anchor Rod Detail 19-6
19.5.2 Permanent Steel Sheet Pile Walls. 19-7
19.6 Permanent MSE Walls 19-8

Figure 19.6-1 Wrap-Around MSE Wall Details 19-10
Figure 19.6-2 Cross Sections at Bridge Approaches. 19-11
Figure 19.6-3 Cross Sections at Bridge Approaches with Sidewalks 19-11
Figure 19.6-4 MSE Wall Details. 19-11
19.6.1 Future Widenings 19-12
Figure 19.6.1-1 Single Bridge with Future Widening 19-12
Figure 19.6.1-2 MSE Wall Details with Allowance for Future Inside Widening 19-13
Figure 19.6.1-3 Section Through Roadway Supported by MSE Wall 19-13
19.7 Temporary Walls 19-14
Figure 19.7-1 Location of Critical Walls with Respect to Traffic Lanes 19-14
19.7.1 Temporary MSE Walls. 19-14
19.7.2 Temporary Sheet Pile Walls 19-15
Figure 19.7.2-1 Alternate Wall Construction Sequence. 19-16
19.8 Soldier Pile Walls 19-17
20 Segmental Bridges (Rev. 01/11) **20-1**
20.1 General 20-1
Figure 20.1-1 Reinforcing Jig for Variable Depth Segment 20-2
20.2 Segment Designation / Segment Layout Sheet 20-3
20.3 Superstructure Drawings - Segment Dimension Sheets. 20-4
20.4 Superstructure Drawings - Segment Reinforcing Sheets 20-5
Figure 20.4-1 Reinforcing in Deviation Segment 20-6
20.5 Superstructure Drawings - Transverse Post-tensioning Details 20-6
20.6 Superstructure Drawings - Bulkhead and Shear Key Details 20-7
20.7 Superstructure Drawings - Longitudinal Post-Tensioning Layout 20-7
20.8 Superstructure Drawings - Post-Tensioning Details 20-8
20.9 Superstructure Drawings - Erection Scheme and Construction Notes 20-8
20.9.1 Balanced Cantilever 20-8
Figure 20.9.1-1 Means of Stabilizing Cantilever 20-9
Figure 20.9.1-2 Stabilization of Balanced Cantilever. 20-10
Figure 20.9.1-3 Setting Geometry with Strongbacks. 20-11
Figure 20.9.1-4 Gantry and Stabilization Towers 20-13
Figure 20.9.1-5 Gantry with Leg on Pier Segment 20-13
Figure 20.9.1-6 Gantry Loads During Launching. 20-14
Figure 20.9.1-7 Beam and Winch Details 20-15
20.9.2 Span by Span Erection 20-16
Figure 20.9.2-1 Span by Span Construction 20-17
Figure 20.9.2-2 Underslung Truss Details. 20-19
Figure 20.9.2-3 Span by Span Top-Down Erection Details. 20-20
Figure 20.9.2-4 Project Specific Truck and Axle Weight for Segment Transport. 20-21
Figure 20.9.2-5 Truck Loaded with Segment. 20-21
21 Movable Bridges (Rev. 01/11) **21-1**
21.1 Bascule Leaf Notes 21-1
21.1.1 General 21-1
21.1.2 Bascule Leaf Notes 21-1

21.2 Bascule Steel Girders 21-6
21.2.1 General 21-6
21.2.2 Framing Plan Drawings 21-6
Figure 21.2.2-1 Framing Plan 21-7
21.2.3 Longitudinal Section Drawings 21-7
Figure 21.2.3-1 Longitudinal Section 21-8
21.2.4 Transverse Section Drawings 21-8
Figure 21.2.4-1 Transverse Section Drawings 21-9
21.2.5 Main Girder Elevation Drawings 21-9
Figure 21.2.5-1 Main Girder Partial Elevation Drawing 21-11
21.3 Rack Assembly And Details 21-12
21.3.1 General 21-12
21.3.2 Rack Details 21-12
Figure 21.3.2-1 Rack Details 21-13
21.3.3 Rack Assembly 21-13
Figure 21.3.3-1 Rack Assembly. 21-14
21.3.4 Rack Assembly Design Considerations. 21-15
21.4 Rack Pinion, Bearing Supports and Bearing Details. 21-15
21.4.1 General 21-15
21.4.2 Rack Pinion Details 21-15
Figure 21.4.2-1 Pinion Details 21-16
21.4.3 Pinion Bearing Details 21-16
Figure 21.4.3-1 Pinion Bearing 21-17
21.4.4 Pinion Bearing Support Details 21-18
21.4.5 Rack Pinion Assembly Design Considerations 21-18
21.5 Trunnion Assembly, Bearing Supports and Details. 21-18
21.5.1 General 21-18
21.5.2 Trunnion Assembly Details 21-19
Figure 21.5.2-1 Trunnion Assembly. 21-19
21.5.3 Trunnion Bearing Details. 21-20
21.5.4 Trunnion Bearing Support Details 21-20
21.5.5 Trunnion Assembly Design Considerations. 21-21
21.6 Machinery Layout and Elevation 21-21
21.6.1 General 21-21
21.6.2 Machinery Layout and Elevation Details 21-21
Figure 21.6.2-1 Machinery Partial Elevation 21-22
21.7 Submarine Cable 21-23
21.7.1 Submarine Cable Detail Drawings. 21-23
Figure 21.7.1-1 Typical Submarine Cable Terminal Cabinet. 21-23
Figure 21.7.1-2 Submarine Cable Support Details 21-24
Figure 21.7.1-3 Submarine Cable Trench 21-24
21.8 Centering Devices. 21-24
21.8.1 Centering Device Detail Drawings. 21-24
Figure 21.8.1-1 Centering Device Details 21-25

21.9 Counterweight Adjustment Blocks 21-26
21.9.1 Counterweight Adjustment Blocks Detail Drawings. 21-26
Figure 21.9.1-1 Concrete Counterweight Adjustment Block Details 21-26
Figure 21.9.1-2 Cast Iron Counterweight Adjustment Block Details 21-26
Figure 21.9.1-3 Counterweight Block Handle Details 21-27
21.10 Live Load Shoes 21-27
21.10.1 Live Load Shoe Detail Drawings 21-27
Figure 21.10.1-1 Live Load Shoe Details 21-28
21.11 Span Locks 21-29
21.11.1 Span Lock Detail Drawings 21-29
Figure 21.11.1-1 Span Lock Plan and Section 21-30
Figure 21.11.1-2 Span Lock Details 21-31
21.12 Bascule Leaf Barriers 21-32
21.12.1 Bascule Leaf Barrier Detail Drawings 21-32
Figure 21.12.1-1 Pedestrian Barrier Section 21-32
Figure 21.12.1-2 Traffic Barrier Sections. 21-33
Figure 21.12.1-3 Barrier Field Splice Details. 21-34
21.13 Bascule Leaf Deck Joints 21-35
21.13.1 Bascule Leaf Deck Joint Detail Drawings 21-35
Figure 21.13.1-1 Bascule Leaf Rear Joint 21-35
Figure 21.13.1-2 Bascule Leaf Forward Joint and Longitudinal Joint 21-36
21.14 Bascule Bridge Plan Submittal Requirements 21-37
21.14.1 List of Required Drawings 21-37
21.14.2 Progress Submittals Schedule and Content 21-41
22 Drainage (Rev. 01/11) **. 22-1**
22.1 General 22-1
22.2 Deck Drains. 22-1
Figure 22.2-1 Large Scupper Detail. 22-2
Figure 22.2-2 Deck Drain Detail 22-2
22.3 Drain Conveyance. 22-3
Figure 22.3-1 Pier Drainage Details 22-4
22.3.1 Drain Conveyance - Optional Materials. 22-4
Figure 22.3.1-1 Optional Materials Details 22-5
22.4 Drainage within Retaining Wall Embankments 22-5
Figure 22.4-1 Drainage Discharge Through MSE Wall 22-6
Figure 22.4-2 Drainage with Trunk Line Outside of Retaining Wall. 22-6
Figure 22.4-3 Drainage Single Trunk Line Alternative. 22-6
Figure 22.4-4 Drainage Double Trunk Line Alternative 22-6
Volume 2 - Revision History R2-1

INTRODUCTION

I.1 GENERAL

A. The ***FDOT Structures Detailing Manual***, (***SDM***) is Volume 2 of the ***Structures Manual***. See the ***Structures Manual Introduction*** for additional information including authority, scope, distribution and process for modifications to the ***Structures Manual***.

B. This volume of the Structures Manual provides guidance for drafting and detailing criteria and methods for use in preparing Florida Department of Transportation (FDOT) contract plans for structural elements or systems. These elements or systems include bridges, overhead sign structures, earth retaining structures and miscellaneous highway structures. The SDM includes preferred details and examples of general component plan sheets. The information required to be shown on each type of sheet includes but is not limited to the items listed for the sheet in the SDM chapters.

C. Additional information on overhead sign structures, high-mast light poles, and miscellaneous roadway appurtenances as well as general administrative, geometric, shop drawing, and plans processing may be found in the ***Plans Preparation Manual***, ***(PPM)*** Topic Nos. 625-000-007 and 625-000-008.

D. As a supplement to the ***SDM***, a series of examples which represent some of the many situations a designer may encounter when designing a bridge has been compiled. These ***Structures Detailing Manual Examples*** are provided in a separate PDF document that is referenced in links throughout the ***SDM***. The information presented in the ***SDM*** figures and examples is meant to convey detailing and organizational requirements and not to present actual design examples.

I.2 FORMAT

A. The ***SDM*** is presented in both 8 1/2-inch x 11-inch and 11-inch x 17-inch formats consisting of text, figures, charts, graphs and example drawings. This Manual provides standard engineering criteria and guidelines to be used in the development of engineering drawings of structures for which the Structures Design Office (SDO) has responsibility.

B. The ***SDM*** is intended to be used in conjunction with the ***Structures Design Guidelines (SDG)***, ***Design Standards***, ***Plans Preparation Manual, (PPM)*** (Topic Nos. 625-000-007 and 625-000-008), and the ***CADD Production Criteria Handbook (CPCH)***.

C. The ***SDM*** is written primarily in the active voice to Structural Designers, Professional Engineers, Engineers of Record, Structural Engineers, and Geotechnical Engineers engaged in work for the Florida Department of Transportation.

D. Refer to the ***CPCH***, Chapter 18, for FDOT Drafting Standards related to file naming convention, level names, line weights, line styles and color, text fonts, size, weight and color and dimension styles for Structures QC electronic plan submittal requirements.

I.3 COORDINATION

A. Coordinate all plans production activities and requirements between the ***Structures Manual*** (all Volumes), ***PPM***, and ***AASHTO LRFD Bridge Design Specifications (LRFD)***. Each of these documents has criteria pertaining to bridge or structures design projects, and normally, all must be consulted to assure proper completion of a project for the Department.

B. Direct all questions concerning the applicability or requirements of any of these or other referenced documents to the appropriate FDOT Structures Design Engineer. For a list of Structures Contacts, see the contacts section of the SDO website.

I.4 QUANTITY CALCULATIONS

A. The ***Basis of Estimates Handbook*** describes the method of measurement, basis of payment and required rounding accuracy for frequently used items.

B. Show all quantities on the Computation Book Forms. Include pay item number, description, units and dimensions used if applicable.

C. Show quantity breakdown for individual components by construction phase, such as end bents, diaphragms, deck, traffic barriers, expansion joints, bearings, reinforcing steel, etc. in the estimated quantity blocks located on corresponding plan detail sheets.

D. Show quantities on plan detail sheets to one additional decimal place of accuracy. See Chapter 18 of the ***CPCH*** for directory location and file format for hand calculations and computer input and output requirements.

E. Complete each quantity block and deliver all calculations with the design notes.

I.5 SUMMARY OF BRIDGE PAY ITEMS

A. The estimated bridge quantities are given in the "Summary of Bridge Pay Items" sheet. When this sheet is used, include it immediately following the Bridge Key Sheet. The item numbers, descriptions, units, quantities, and totals will be verified before entry into the Department's Cost Estimating System (TRNS*PORT). Include a separate quantity column for each bridge in the project.

B. Submit quantity booklets and a summary of the estimated bridge quantities with the final submittal package. Refer to the Department's ***Basis of Estimates Handbook*** for guidance in preparing the quantity booklets and the summary of quantities.

C. Input estimated bridge quantities (for each bridge) into the Department's computerized Cost Estimating System (TRNS*PORT) and check the printout.

D. Place quantity calculations for retaining walls, critical temporary walls, and sound barriers in the Roadway Computation Book. Include pay items in the Roadway portion of TRNS*PORT.

E. Review the final Contract Documents to ensure that a clear method of payment is conveyed for all items of work on the project either by the appropriate pay item or in the pay item notes.

I.6 PHASE SUBMITTAL REQUIREMENTS

During the design process, submittals will be made at various stages of project development. The purpose of these phase submittals is to ensure the design meets the Department's intent for a given project and that the work done matches the scope agreed upon at the initiation of the contract. For a summary of phase submittals, see ***PPM***, Volume 1, Chapter 26.

1 DRAFTING AND PRINTING REQUIREMENTS

1.1 GENERAL

This chapter contains references to general detailing standards and requirements for various bridge components. The instructions are also applicable to most other highway related structures such as retaining walls, pile-supported roadways, etc. Refer to the ***CADD Production Criteria Handbook*** (***CPCH***) for specific instructions related to computer aided drafting.

1.2 DRAFTING REQUIREMENTS (Rev. 01/11)

A. Draw all elements at full scale (1:1) to ensure that the plans accurately depict the intended design. A minimum standard of care shall be employed to maintain the accuracy of dimensions shown in relationship to the plans and details as they are drawn to avoid potential design errors and construction conflicts. Exaggerated vertical scales may be used where required for clarity, e.g. Plan and Elevation sheets, Wall Control Drawing Elevation Views, etc.

B. Differentiate outline and dimension line weights.

C. The relative line weight and the chosen lettering should provide perfect legibility when reproduced by normal printing procedures.

D. See the ***Plans Preparation Manual*** (***PPM***) and the ***CPCH*** for additional drafting requirements.

1.3 QUALITY ASSURANCE

Chapter 18 of the ***PPM***, Volume 1, explains the processes for Quality Assurance and Quality Control. Chapter 20, ***PPM*** Volume 1, discusses acceptable printing methods, paper size, and quality of the media and print. From time to time, the Department may conduct an audit of a firm's Quality Assurance/Quality Control (QA/QC) process to ensure the QA/QC plan outlined at the beginning of the project is being followed. All QA/QC documentation, including check prints, design calculations, quantity computations, etc., should be kept on file until construction of the project is complete at a minimum.

1.4 DRAWING REVISIONS

A. When changes are required prior to contract award, follow the procedures outlined in Chapter 20 of the ***PPM***, Volume 1.

B. When changes are required after the contract award, follow the procedures outlined in Chapter 4 of the ***Preparation and Documentation Manual***.

2 DETAILING INSTRUCTIONS

2.1 DETAILING AIDS

The following detailing aids can assist the detailer in efficiently creating a set of plans.

A. When using FDOT programs (Reinforcing Bar Lists, etc.), use the forms and user's manuals provided by the Structures Design Office and/or the Engineering CADD Systems Office as listed on the following web sites: http://www.dot.state.fl.us/structures; http://www.dot.state.fl.us/ecso/

B. Plan the drawings by determining which details and information need to be placed on each sheet, the scale to be used, the number of sheets required and the sequence of the sheets.

C. The Structures Cell Library contains many commonly used cells in the development of structures plans and is located in the Structures Bar Menu. The Structures Bar Menu is available through the Engineering CADD Systems Office (ECSO). Maintenance releases for the Bar Menu are available on the ECSO website. Structures cells are posted on the FDOT Structures website. To receive notifications of changes to the Structures Cell Library and other important updates, sign up for the FDOT Contact Mailer list.

2.2 STRUCTURES IDENTIFICATION NUMBERS

A. FDOT assigns identification numbers to bridges, overhead signs, high-mast light poles and traffic signal mast arms. Structures supporting Intelligent Transportation System (ITS) equipment may be similar to overhead signs or high-mast light poles, these structures are also assigned identification numbers.

B. Contact the District Structures Maintenance Engineer early in the design process to obtain structure identification numbers.

C. New numbers will be assigned to all new and replacement bridges. Widened bridges generally retain their existing numbers. If the widening joins existing structures, the District Structures Maintenance Engineer will decide which bridge number to retain.

D. Show the bridge number on the lower right side above the Title Block of all sheets. For ancillary structures (overhead signs, high mast light poles and traffic signal mast arms) the structure identification number should be shown on the appropriate plan sheet, including data table sheets, above the title block.

E. Place the bridge number of any bridge that shows up in the plan view, including existing bridges to be removed, on the actual bridge. Only the subject bridge number should appear in the lower right corner of the sheet.

2.3 BRIDGE LENGTHS AND HORIZONTAL CONTROL

A. A bridge's length is the distance measured along the Station Line between begin and end of bridge (front faces of end bent backwall or end of adjoining approach slabs for end bents with no back wall.)

B. Horizontal Control Lines

1. Alignment Line: Show the alignment control line that applies within the limits of the bridge.
2. Station Line: This is the horizontal control line from which basic distances, lines and angles are referenced for locating bridge components in the field. This line is usually the same line as the Alignment Line. Use the centerline of construction (℄), Base Line Survey, Profile Grade Line or Baseline (℄) to show the stations along the project. Refer to this as the "Station Line."

2.4 FINANCIAL PROJECT NUMBER AND FEDERAL-AID PROJECT NUMBER

A. Show the Financial Project Identification Numbers (FPID) in the Title Block on all bridge plans. Place the FPID Number on the existing bridge plans if included in the submittal.

B. Do not show Federal-Aid Project Numbers (F.A.P. No.) on the bridge plans. Federal-Aid Project Numbers should be shown on the Key Sheet only.

2.5 INITIAL BLOCK

Include the initials or name of the person performing each function and the date completed for each sheet. If a function is not applicable, place a dash through the name and date block.

2.6 TITLE BLOCK

In upper case letters, include the following information in the title block, of each plan sheet:

A. Sheet title

B. Project Name (a project description and bridge location)

C. Sheet Number

D. Initials (Detailers', Designers' and Checker's)

E. EOR information (Consultant or FDOT logo with Engineer of Record's name, address, PE License number and consultant Certificate of Authorization number)

F. Financial Project ID Number

G. County (or counties, if project covers more than one county)

H. Road number

2.7 ORTHOGRAPHIC PROJECTION

A. Use orthographic projection (a multi view system using as many dimensioned views as necessary) to show an object's features. In general, detail objects using more than one view.

B. Use perspective and isometric views to clarify complicated details.

2.8 VIEWS

A. Before starting a drawing, study the bridge or component and determine the views and sections required to describe it fully and to the best advantage. Plan the layout and detail accordingly, allowing sufficient space for dimensions and notes.

B. Generally, all details throughout the bridge plans shall be oriented consistently. Show layouts with stationing increasing from left to right. Detail End Bent 1 looking back station; detail all other substructure elements looking ahead station. Detail superstructure sections looking ahead station.

C. Cross-reference all sections or notes on a drawing.

D. Use a planned system to arrange details on a sheet. Do not randomly place views and sections on the drawing. Avoid crowding details on a sheet. In general, it is preferred to layout a sheet with the plan view in the upper left, elevation aligned with plan view in lower left, side/section views on upper right and quantity block and notes on lower right.

2.9 SCALES

Select a scale large enough to clearly show required details when printed to 11-inch x 17-inch size with a minimum of 5/8-inch left and right margins. Do not indicate scale on the drawings. Set the annotation scale and active scale through the Bar Menu and save settings to ensure consistency. The following scales are recommended:

A. Plan and Elevation: Depending on the size of the bridge and/or how congested the sheet will be, use 1"= 10' through 1"= 50'.

B. Foundation Layout: 1"= 10' or to fit the sheet (longitudinal and lateral scales may be different and piling may be exaggerated in size for clarity).

C. Substructures

   1. Plan and Elevation views 3/8"= 1'-0"
   2. Sections and Details 3/4"= 1'-0" or larger

D. Superstructure

   1. Plan View 1/4"= 1'-0"
   2. Cross Sections 3/8"= 1'-0"
   3. Details 3/4"= 1'-0" or larger.

2.10 STRENGTH AND CONTRAST OF LINES

A. Contrast between various line weights should be in the width of the line and not in the intensity. The exception is topo file and other reference files which should be screened back to reduce intensity. Verify that all lines are legible on prints.

B. Vary the line weight to accentuate important features. Use consistent line weights for similar purposes. (See the ***CPCH***.)

2.11 DIMENSIONING

2.11.1 General

A. A dimension is a linear measurement used to describe an object's size.

B. A value is a quantity used to express a magnitude. An integer used to quantify a number of items such as bars, spacing, bolts, holes, etc. (e.g., 10 spaces @ 4", 10 ~ 4A1). See Figure 2.11.1-1.

Figure 2.11.1-1 Stirrup Bar Detail

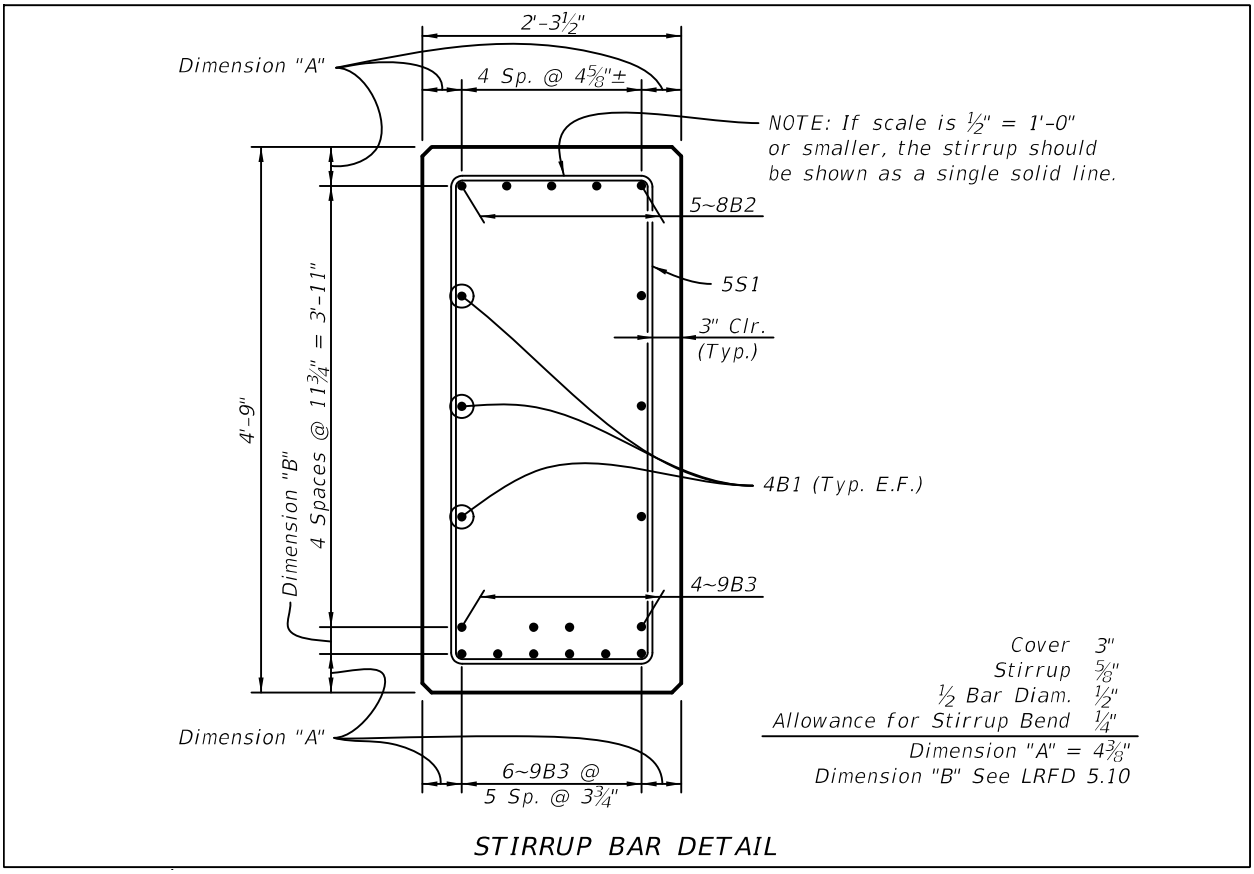

C. A unit is a precise quantity in terms of a reference for measurement.

D. Linear dimension: Use a value in conjunction with a unit of measurement (e.g., 5'-6¼").

E. Elevation: The unit for elevations is feet (ft). The unit is understood and should not be shown. Show most elevations to three decimal places (e.g., 25.384). See section 2.11.3 for details.

F. Angle: Show angles to needed accuracy up to the nearest second.

G. Sizes of Structural Steel and Aluminum members: When showing size, show all applicable units. Use industry standards such as ASTM or show the manufacturer's size when applicable. Examples of how to designate structural steel and aluminum members are as follows:

1. For solid shapes such as plates and bars - Thickness" x Width" x Length"
2. For W-Shapes - W 30 x 90
3. For Channels - C 10 x 15.3
4. For Angles - L 4 x 4 x ¼
5. For Structural Tees - WT 16.5 x 59

2.11.2 Dimensions and Text

A. Dimensions are displayed by associating Values and Units. Show dimensions clearly, accurately and tied to a control line. Not all dimensions shown on a drawing are for construction purposes; many are engineering dimensions given for convenient reference and checking.

B. Compressed dimensions, due to limited space, may be shown without sacrificing legibility. See Figure 2.11.2-1 for examples.

Figure 2.11.2-1 Compressed Dimensions

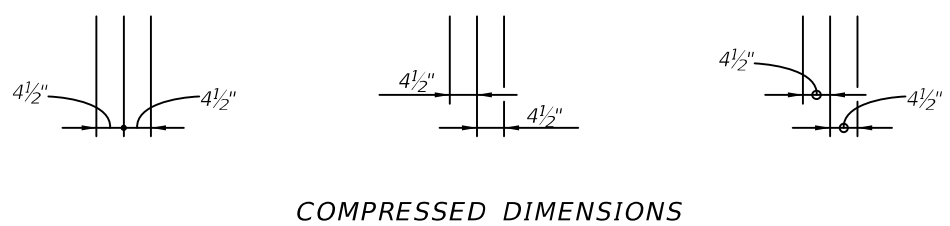

C. Dimension lines should be spaced about 3/4-inch from the object when plotted.

D. Parallel dimension lines should be spaced 3/8-inch minimum when plotted.

E. Dimensions should be kept outside the views (between Extension Lines), but occasionally may be placed inside views or at the end of a leader line.

F. Show dimensions in units of feet and inches. Show dimensions of 12-inches or more in feet, inches and fractions of an inch. Show dimension greater than 1-inch but less than 12-inches in inches and fractions of an inch. Show dimensions less than one inch in fractions of an inch. Some exceptions to this rule are component or member designations (i.e., 24" Square Piling, Existing 36" Steel Beam, etc.) and elevations.

G. Dimensions are to be read from the following directions (see Figure 2.11.2-2):

1. Place numerals on horizontal dimension lines so that they can be read from the bottom of the drawing.
2. Place numerals on vertical dimension lines so that they can be read from the right side of the drawing.
3. Place numerals on inclined dimension lines so that they can be read horizontally by rotating the sheet through the smallest possible angle.

Figure 2.11.2-2
Text Orientation

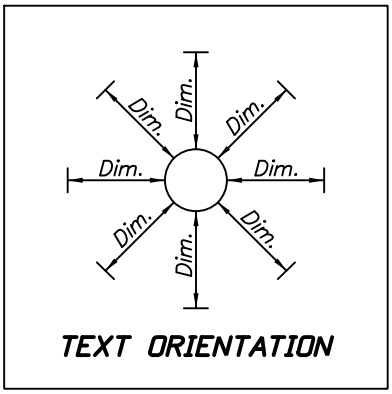

H. Show all dimension numerals parallel to the dimension line.

I. When dimension numerals occupy more space than provided by the dimension line, show on extension lines or by leader lines to the dimension line.

J. Ensure the sum of string dimensions equals the total overall dimension. If this presents a mathematical impossibility without violating the accuracy standards in Section 2.11.3 of this Chapter, use the (+) or (-) signs to indicate heavy or light dimensions. When dimensioning a series of spaces, show incremental dimensions. Avoid the use of "Equal Spaces".

K. When it is necessary to include a dimension between certain points in a detail, small filled circles may be used to emphasize the extremities of the line being measured.

L. Terminate dimension lines with arrowheads. Arrowheads should be a uniform size.

M. Double arrowheads on a dimension line are used on partial views, in congested areas, or when it is not necessary to show the dimension line to its termination. Note dimension numerals on the line along with a description of the magnitude or boundaries in parenthesis. Double arrowheads should not be terminated at extension lines. See Figure 2.11.2-3.

Figure 2.11.2-3 Dimensions

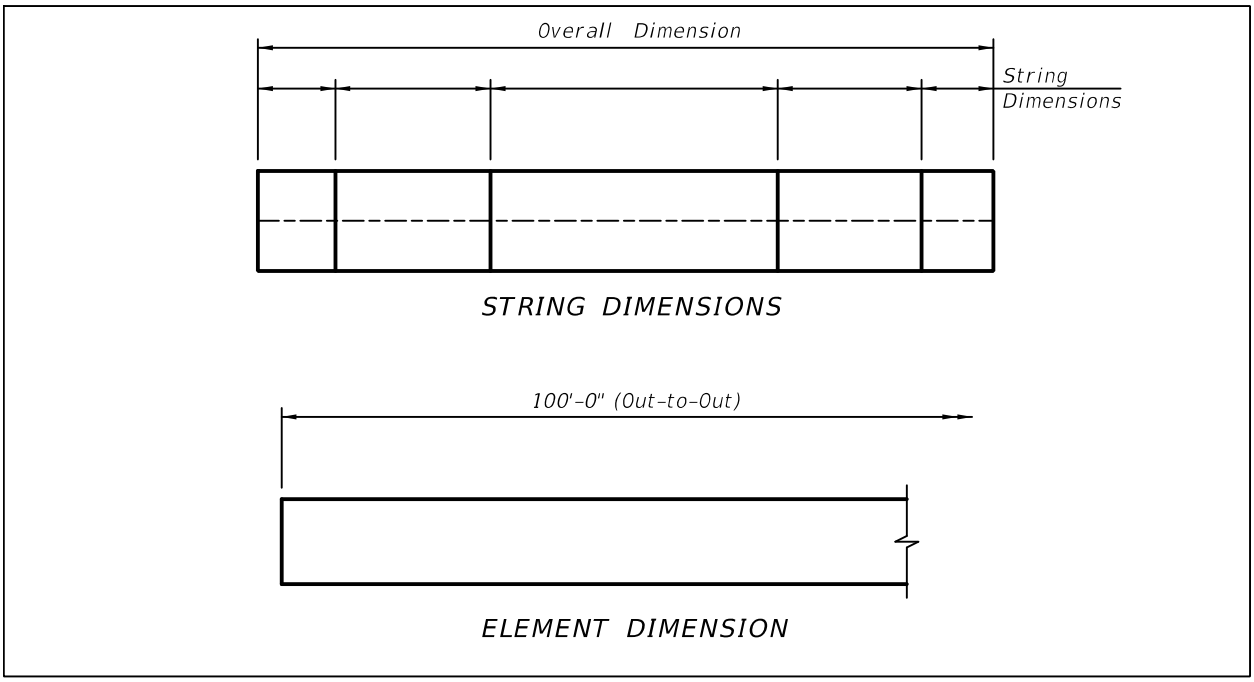

N. Mark centerlines with the centerline symbol. Do not use a centerline as a dimension line, though it may serve as an extension line.

O. Show leader lines with straight lines or continuous curves. Leader lines may cross extension and object lines but may not cross dimension lines.

P. Extend extension lines beyond the point of the arrowhead and leave a gap from the object.

Q. Label radii, surface finishes, and angles as required. Show angles and bearings without hyphens. See Figure 2.11.2-4 and Figure 2.11.2-5.

Figure 2.11.2-4 Angles

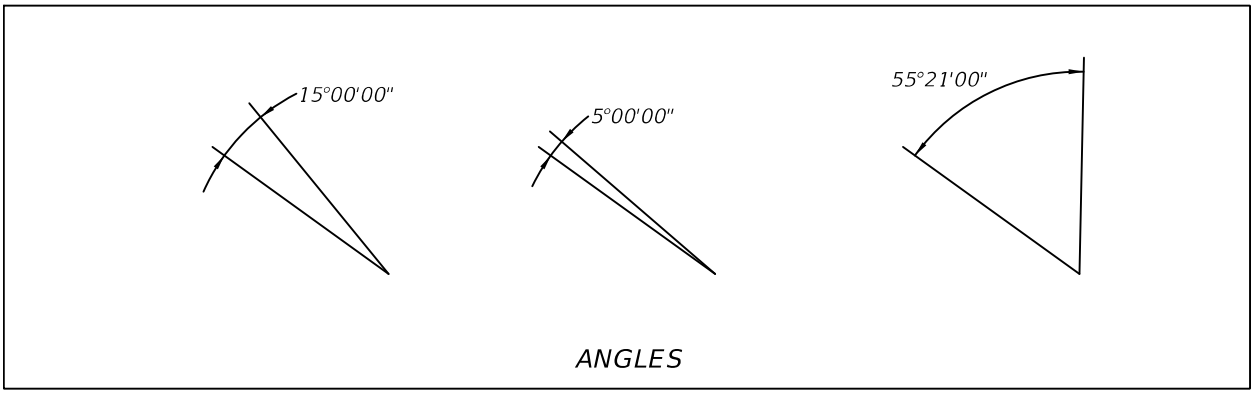

Figure 2.11.2-5 Radii

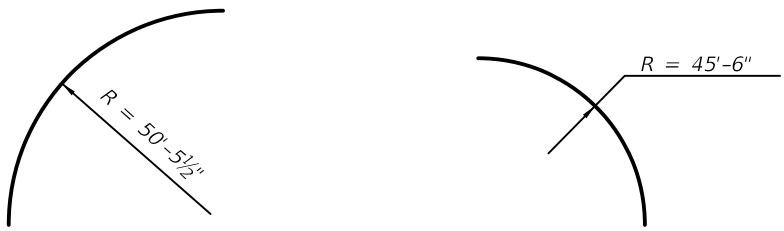

RADII

R. For non-level surfaces with extremities not specifically defined by vertical dimensions, note to slope "down" a specific vertical dimension over a defined horizontal length or at a uniform rate.

S. For non-plumb surfaces with extremities not specifically defined by horizontal and vertical dimensions, note to bevel at a uniform rate with the bevel symbol. See Figure 2.11.2-6. For the batter of non-plumb piling, note to batter with the bevel symbol or the amount of batter noted and connected to piling by leader lines with the direction of pile batter clearly shown on the drawings.

Figure 2.11.2-6 Bevel Symbol Detail

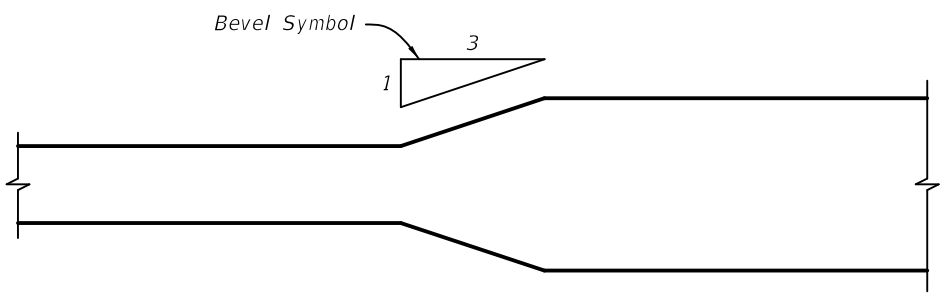

BEVEL SYMBOL DETAIL

T. When dimensions are shown by methods other than described above, the unit should be provided. In this event, dimensions are defined as text (i.e., titles, sub-titles, headings, labels, notes, and free standing texts). For free standing texts, the unit may be spelled out to add clarity. If the dimensional text used to describe the size of an object is placed at the end of a leader line pointing directly to the object, show the units.

2.11.3 Dimensioning Precision

A. Show dimensions in feet, inches and fraction of an inch and elevations in decimal of a foot.

B. Dimension concrete to the nearest 1/8-inch.

C. Dimension structural steel to the nearest 1/16-inch.

D. Dimension partial lengths of reinforcing steel to nearest 1/4-inch; dimension overall lengths to the nearest inch.

E. Show stations and offsets to the nearest 0.01 foot.

F. Show layout dimensions (dimensions along tangents, etc.) to the nearest 1/16-inch.

G. Show foundation layout dimensions to the nearest 1/8-inch or 0.01 foot stationing.

H. Show dead load and live load deflections to the nearest 1/16-inch.

I. Show elevations to the nearest 0.001 foot, except pile cut off elevations to the nearest 0.1-foot and water elevations and groundline elevations to nearest 0.01 foot.

J. Show skew angles and bearings to the nearest second.
Example: 69° 38' 32", N 69° 38' 32" E

K. Show other angles given such that dependent dimensions meet the above criteria to the nearest second.

L. Show spacing of reinforcing steel to the nearest 1/4-inch.

M. Show manufactured items to industry standards.

2.12 SYMBOLS AND PATTERNS

A. To simplify the construction and clarity of details, patterns may be used to represent certain materials.

B. Use only enough material indication to clarify details.

C. Verify legibility when the drawings are reproduced to 11-inch x 17-inch print size.

D. Common symbols and patterns are included in the FDOT Structures Cell Library.

E. Use the symbologies (layers, linestyles, and line weights) appropriate to each element of the drawing, based on the levels provided in the Structures CADD seed file provided by the ECSO with the FDOT CADD software, and the requirements of CPCH Chapter 18.

2.13 ARCHITECTURAL TREATMENT

A. Do not use architectural treatments such as shades and shadows on bridge drawings.

B. Keep required pictorial views with shades and shadows separate from the bridge details.

2.14 SKEW ANGLE AND COMPLEMENTARY SKEW ANGLE

A. A skew angle is the acute angle measured between a line perpendicular to the longitudinal line and the skew line itself. See Figure 2.14-1.

Figure 2.14-1 Skew Angle and Complementary Angle

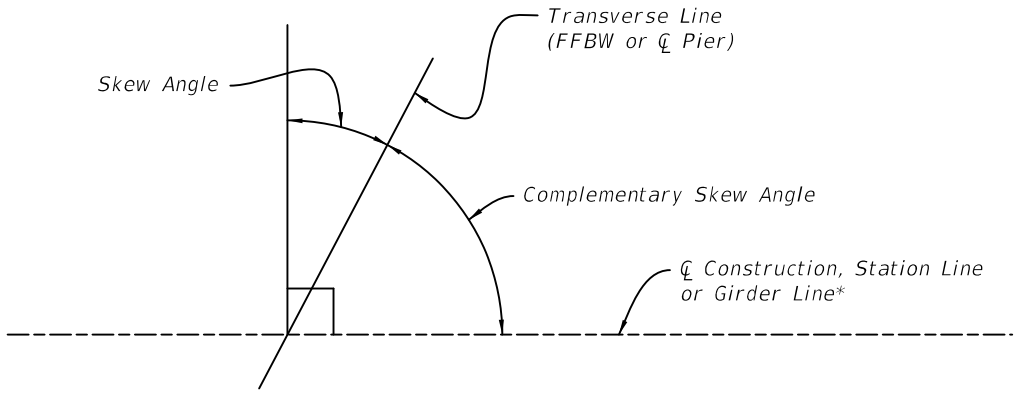

SKEW ANGLE AND COMPLEMENTARY ANGLE

* For bridges with horizontally curved alignments, measure the skew from a line tangent to the curve

B. The skew angle referred to by computer geometry programs may actually be complementary to the plan skew angle. The sum of the skew angle and the complementary skew angle is 90 degrees.

2.15 SECTION CUT LINE AND IDENTIFICATION

A. A section cut line is an imaginary line extending between right angles at the location of the section. Use section arrows to indicate the direction of the section view.

B. Place the identification letters of the section on the interior side of the cut line. For sections located on another sheet, provide cross-reference notes on both sheets.

2.16 ENLARGED DETAILS

When an enlarged detail of a certain area in a view is required, place a circle or an ellipse large enough to encompass the area that is to be shown in the enlarged detail. Annotate the circle/ellipse with a leader line and a label such as: See Detail "A", Sheet _. Entitle the enlarged detail: DETAIL "A". If the Detail is located on another sheet, provide cross-reference notes on both sheets.

2.17 USING STANDARD ABBREVIATIONS

A. Do not use abbreviations when the meaning may be in doubt.

B. Avoid abbreviations in titles, subtitles, and notes.

C. For Standard Abbreviations, see ***Design Standard*** 001.

D. Use periods after all abbreviations other than those on ***Design Standard*** 001 noted above.

E. Define abbreviations in the General Notes or by placing a legend on the sheet containing the abbreviations.

2.18 ARROWS

A. North Arrow - Place North Arrows on drawings to aid in orienting the drawings to the actual site and bridge (or structure) location and orientation.

B. Direction of Stationing Arrow - Use an arrow to indicate the direction of stationing on plan views, superstructures, substructures etc., as well as orientation references of details and sections. Refer to ***SDM*** 2.8 regarding plan orientation.

C. Directional Arrow for Water Flow - Use an arrow to indicate direction of stream and/or tidal flow of water. The tidal flow arrow cell is located in the Structures Bar Menu.

D. Use the North Arrow or Direction of Stationing Arrow on all sheets requiring directional orientation. See instructions for individual sheets for more information.

3 COMPOSITION OF PLAN SET

3.1 SHEET NUMBERS FOR BRIDGES AND WALLS

A. Bridge plans are usually a component set of plans and includes walls. Projects with minor bridge work may include these features on sheets in the roadway plan set or detailed on roadway sheets. When prepared as a component set of plans, assemble the drawings as a separate plan set complete with a key sheet and all bridge and wall sheets, including the existing bridge plans. Number the sheets consecutively with the sheet numbers prefixed by the letter and letter/number combinations "B" for common sheets, "B1" for the first bridge, "B2" for the second bridge, "B3" for the third bridge, etc., "BW" sheets, if necessary, for all walls, and ending with the existing bridge plans, "BX1", "BX2", "BX3", etc., if necessary.

B. Start the sheet numbering with the Key Sheet numbered "B-1". Continue to use the "B" prefix for all sheets with common details to all the bridges. Begin the sheet numbering for the first sheet of the first bridge with "B1-1". Continue to use the "B1" prefix for all sheets with details pertaining to the first bridge ("B1-2", "B1-3", etc.). Number the second series of sheets for the next bridge, if included, "B2-1", "B2-2", "B2-3", etc., continuing to use the "B2" prefix for all sheets of the second bridge. Continue incrementing sheet prefix numbers, "B3-1", "B4-1", etc., for each additional bridge included in the plans. To further divide bridge sheets on complex bridge projects, use a Reference Drawing Number box in the lower right hand corner of the sheet (see ***SDM*** 3.5).

C. After all the bridge plans, place all the wall drawings (including cast-in-place retaining walls, proprietary wall control plans, temporary walls, and sound barriers) using a "BW" sheet prefix. To further divide wall sheets by wall number or type, use the Reference Drawing Number box in the lower right hand corner of the sheet (see ***SDM*** 3.5). At the end of the plan set, place all existing bridge sheets for each bridge in one PDF file named "B1ExistingPlans.pdf" for the first bridge (number sheets sequentially "BX1-1", "BX1-2", etc.) and "B2ExistingPlans.pdf" for the second bridge, etc.

D. Number other miscellaneous structures (signs, signals, lighting, etc) for the appropriate component set (see ***PPM*** Volume 2, Chapter 2) but place the drawing files in the Structures folder (see ***CPCH***, Chapter 18). Use the Roadway border with initials found in the Structures Bar Menu for miscellaneous structures.

E. The preferred sheet order along with the file naming conventions and other CADD requirements are shown in the ***CPCH***, Chapter 18. All the sheets given in the Table may not be required in a given set of plans, while in others, additional sheets may be necessary. Any sheet name not listed in the table will flagged and not checked for compliance by the Quality Control checker (QC checker). The sheet order should correspond to the work sequence.

3.2 SHEET TITLES

If more than one sheet is required for a particular sheet type, add sheet numbers in the Sheet Title Block; e.g.: "General Notes (1 of 2)", "General Notes (2 of 2)".

3.3 SHEET REFERENCES FOR MULTIPLE BRIDGES AND/OR STRUCTURES

The drawings for a specific bridge may refer to other drawings with sheet numbers beginning with the same prefix letter and number or with the letter "B". For example, sheets in the B1-XX series may refer to any other sheet within the B1-XX series or the B-XX series but may not refer to sheets in the B2-XX series or B3-XX series, etc.

3.4 SHEET NUMBERS ON PROJECTS WITH ALTERNATE STRUCTURE TYPES

On projects with alternate structure types, designate each alternate for each bridge with a unique number following the "B" prefix (e.g. "B1" and "B2" for bridge 1 alternates; "B3" and "B4" for bridge 2 alternates, etc.). Since the sheet number will no longer correspond to the bridge number, cross reference each alternate with the bridge number in the List of Drawings.

3.5 REFERENCE DRAWING NUMBER BOX

When developing complex bridges or multiple wall systems, use the Reference Drawing Number box in the lower right hand corner on the plans to separate components and help in the development of cross references. Drawing letter/number combinations are assigned at the discretion of the designer and should include prefix combinations that correspond to the details on the drawing. The information in the Reference Drawing Number box is only used for cross referencing and plan preparation; no data from the box will be used in the Electronic Delivery process. For drawing letter/number combination suggestions, see the ***CPCH***, Chapter 18. Optional Reference Drawing Number box is required on all bascule bridges or bridges with multiple wall types. For projects with alternate designs, follow the Reference Drawing Number with the alternate designation (e.g. Drawing No. 45, Alt. B).

3.6 PHASE SUBMITTAL REQUIREMENTS

For a summary of phase submittals, see ***PPM***, Volume 1, Chapter 26.

3.7 USE OF FDOT DESIGN STANDARDS

A. The current FDOT Design Standards comprise the best practices of the FDOT in design code compliance, pay item consistency, and Specification coordination. See the ***Instructions for Design Standards (IDS)*** for additional information. Do not include a list of applicable standards in the Index of Sheets.

B. In structures and wall plans, reference the applicable FDOT Design Standards by general description and index number. Place the reference on the primary drawings depicting the component. In many instances, several plan references are appropriate (e.g. beam index number references on framing plan and cross section sheets.) Provide at least one index number for each Design Standard used. Note the governing Design Standards and Design Standards Modifications on the lead project Key Sheet (see ***PPM***, Volume 2, Section 3.8). Do not include a list of Design Standards on the Index of Sheets.

C. Some Design Standards for structural components, e.g. prestressed beams, approach slabs, bearing pads, etc., require supplemental tables, notes and or graphics to be completed and included in the plans by the designer. Select the appropriate tables, notes and or graphics using the FDOT CADD software. For the latest version of the FDOT CADD software, go to: http://www.dot.state.fl.us/ecso/downloads/software/. For the latest version of the Structures Design Standards Data Table cell library (V8semi-standards.cel), go to: http://www.dot.state.fl.us/structures/CADD/standards/CurrentStandards/MicrostationDrawings.shtm

D. For the Design Standards, see the Roadway Design Office's web site at: http://www.dot.state.fl.us/rddesign/DesignStandards/Standards.shtm.

Commentary: Since all former Structures Standard Drawings are now contained in the Design Standards, specific references are necessary to clarify the Designer's intent to the Contractor.

3.8 EXISTING PLANS

Existing structures plans may be incorporated into new Contract Plans. When available, existing plans may be obtained from the District. Plans must be legible and reproducible. See ***CPCH*** Chapter 18 for Existing Plans file naming and formats required for Electronic Delivery. Add plan note indicating that existing plans are not available when applicable.

4 CONCRETE COMPONENTS

4.1 GENERAL

A. Concrete components for bridges are custom constructed either in place at the bridge site or at a precast facility and require clear, complete and fully detailed plans.

B. The concrete outlines, reinforcing steel, prestressing strands and/or post-tensioning tendons must be easily distinguishable. This can be accomplished by using the appropriate preset levels in the MicroStation Structures seed file provided by the ECSO with the FDOT software package and/or following the symbology guidelines provided in Chapter 18 of the ***CPCH***.

C. When detailing concrete components, show plan and elevation views along with sections and any details necessary for construction.

4.2 ITEMS EMBEDDED IN CONCRETE COMPONENTS

Show the vertical and horizontal locations of reinforcing steel, prestressing strands and/ or post-tensioning tendons. Normally, the spacing, location and limits of reinforcing steel can be adequately shown with a few representative bars which are clearly labeled and/or dimensioned. It is important to ensure that all reinforcing steel is clearly identified without over complicating the drawing.

4.3 REINFORCING STEEL (Rev. 01/11)

A. Detail reinforcing bars in plan, elevation and sections to clearly indicate the size, location and spacing of individual bars. Show the number of reinforcing bars in plan or elevation views.

B. Usually, in plan or elevation views, only the first bar and the last bar of a series of bars need be drawn, and the number and spacing indicated between. Show all bars in section views.

C. Show the number of bars, followed by a tilde, the bar size, the bar mark and the spacing. For example, 12 ~ 8 A1 @ 6" means 12 bars, Size #8, Mark A1 at 6 inch spacing. The symbol "@" is optional for the word "at".

D. #4 bars are the smallest reinforcing steel size used in cast-in-place components for bridges.

E. Each bar mark (e.g. "F1") is to be unique to a single component. Where bars are shown in multiple views, bill bars in the view in which they are first encountered and only reference for clarity in other views. See Figure 4.3-1.

F. Do not use the letters “I”, “O”, or “Q” in bar mark designations.

Figure 4.3-1 Reinforcing Bar Callout Detail

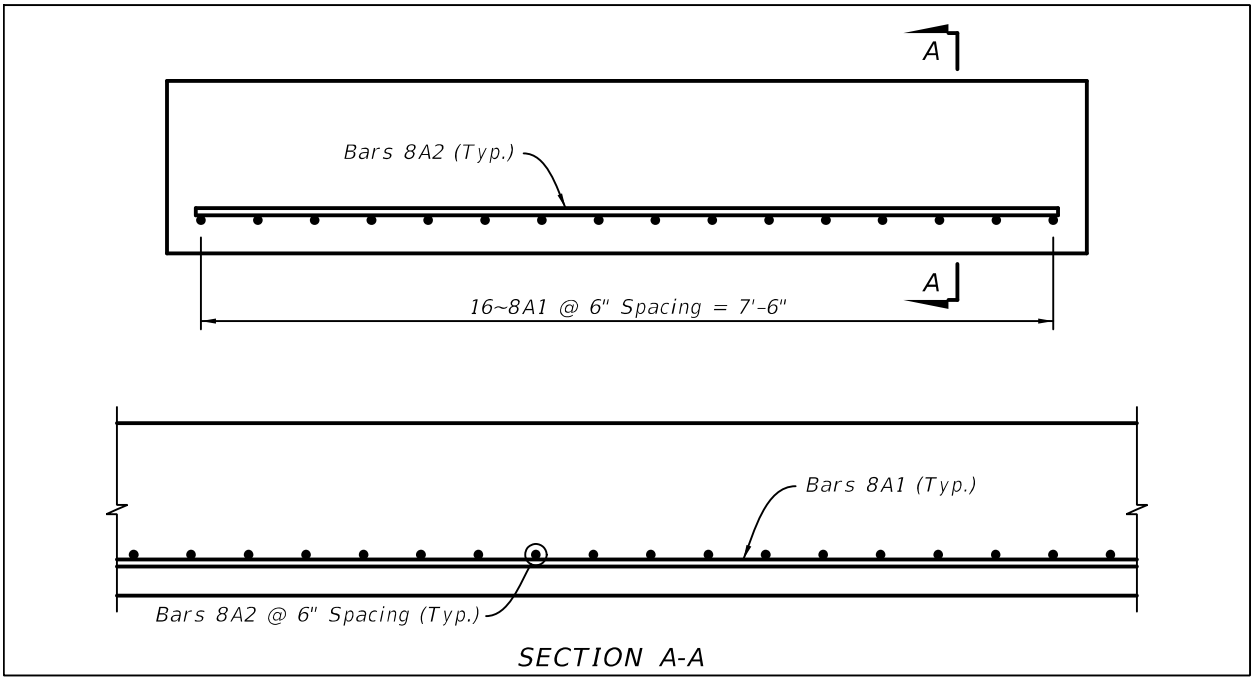

4.3.1 Maximum Bar Spacing

A. For maximum bar spacing for shrinkage and temperature, see ***LRFD*** [5.10.8].

B. For horizontal reinforcing steel in walls, the distance from the top of footing to the first bar in the stem is a maximum of one half the spacing of the bars immediately above it.

C. Bar spaces, plus cover to centerline of bars must equal the concrete dimension of the member. Use the following procedure to detail multiple bars equally spaced where the number of spaces times the nominal spacing does not exactly equal the overall concrete.

14 Bars @ 5½"± = 6'-0" or 13 sp @ 5½"± = 6'-0"

This means 13 equal spaces. The symbol "@" means "at", and the symbol "±" means "approximately."

4.3.2 Minimum Bar Spacing

A. For minimum bar spacing, see ***LRFD*** [5].

B. When multiple bars are lapped at the same location, the required minimum spacing measured between laps must be equal that for parallel bars.

C. Avoid using bundled bars. If bundled bars are required, they must meet ***LRFD*** requirements.

4.3.3 Minimum Concrete Cover

See ***SDG*** for minimum concrete cover requirements.

4.3.4 Fit and Clearance

A. Check reinforcing fit and clearance by calculations and with large scale drawings. Skews tend to aggravate problems of reinforcing fit. Consider tolerances normally allowed for cutting, bending and locating reinforcing. Refer to ***CRSI Manual of Standard Practice*** for industry fabrication tolerances.

B. Some common areas of interference are:

1. Between slab reinforcing and supporting element reinforcing, such as girder stirrups and monolithic end bent or intermediate bent.
2. Vertical column bars projecting through pier cap reinforcing.
3. Areas near expansion devices.
4. Anchor bolt blockouts for girders.
5. At anchorages for post-tensioning systems.
6. Between prestressing (pretensioned or post-tensioned) steel and reinforcing steel stirrups, ties, etc.
7. Between column bars to be lapped with footing dowels.
8. Drilled shaft steel projecting through footing steel.
9. Bars with large radii spaced close together or where fabrication tolerances exceed placement tolerances.
10. Bars greater than size #11 where fabrication tolerances are increased.

4.3.5 Bar Splicing

A. Detail splices for main reinforcement bars of different sizes. Other bars may be shown as "continuous" without showing splice locations because splices are detailed on the Reinforcing Bar List. Indicate splice locations as required (i.e., phase construction, construction joints, etc.). Detail locations and splice lengths for main reinforcing. Use mechanical splices or other positive connections for bars larger than #11.

B. For tension splices, the smaller bar governs the length of a lap splice between bars of different sizes.

C. For compression splices, the larger of the splice length of the smaller bar or the development length of the larger bar, governs.

D. Wherever practical, stagger main reinforcing bars so that only one-third are spliced at the same location. Exceptions include:

1. Phased construction.
2. Flat slab construction.
3. Compression zones.
4. Bases of stems of cantilevered retaining walls.

4.3.6 Dowels

Show minimum embedment length on the plans. Use standard hook bends when bent bars are used and depth of embedment permits. Show bent bars used for footing dowels resting on the bottom reinforcing steel mat in the footing. Verify that the minimum embedded length does not violate minimum cover requirements.

4.3.7 Bars in Section

A. Draw sections at a scale adequate to clearly show reinforcing details.

B. For stirrups and other bars not shown end-on, represent bars with single, unbroken lines at scales less than 1/2"=1'-0" and double, unbroken lines at 1/2" scale or larger.

C. Draw tie and stirrup hooks to scale. Dimensions are not necessary, unless it is a non-standard bar bend.

D. Use small circles to represent bars shown end-on. Circles may be left open or shown solid (filled). Use the chosen symbol consistently throughout the drawings. Show bars as filled circles when holes are also shown.

E. Identify bars shown end-on by leaders with circles or arrowheads pointing to the bar.

F. For complex reinforcing patterns, cut sections at specific locations along a member rather than showing a typical section.

G. Show corner bars enclosed by stirrups or ties at the corner of the bend.

4.3.8 Hook Bars

When the required concrete cover cannot be maintained with normal orientation of the hook, add the following note to the plans: "Rotate bar as necessary to maintain required cover."

4.3.9 Maximum Reinforcing Bar Lengths

#4 Bars and larger: 60 feet.

4.3.10 Reinforcing Bar Lists

A. Refer to ***Design Standard*** Index 21300, Standard Bar Bending Details and the ***Instructions for Design Standards (IDS)***.

B. Using FDOT "Rebar Program", provided with the FDOT Structures Bar Menu, generate a reinforcing bar list for each structure. Provide a labeled tabulation for every reinforced component, (i.e., bents, piers, deck, approach slabs, etc.) Each bar designation must be unique for a given component but may be repeated for separate components. Designate bars "A1", "A2", "B1" etc. Show a separate section in the reinforcing bar list for each component and construction phase on a project.

Prestressed beams, piles, concrete sheet piles and traffic railings that are shown in the Design Standards do not need to be included on the reinforcing bar list.

C. Dimension all bars "out-to-out". Round the overall length of each individual bar to the next inch. Show all straight bar dimensions rounded to the nearest inch.

D. Separate reinforcing for sub-components into a logical sequence similar to the order in which they will be constructed. Identical components should be grouped together. The following list should be used as a guide of the minimum breakdown of sub-components.

Substructure

End Bent
Footing
Column/Pier
Bent Cap

Superstructure

End Diaphragms
Intermediate Diaphragms
Deck

Approach Slabs

Walls

Footing
Wall/Cap
Deadman Anchor

4.3.11 Preferred Maximum Reinforcing Steel Bar Sizes

A. Use the following maximum reinforcing steel sizes for design and detailing.

B. Use the smallest practical bar size in order to minimize stress concentrations, increase bonding strength, decrease corrosion potential, and comply with ***LRFD*** crack control criteria.

Table 4.3.11-1 Preferred Maximum Reinforcing Steel Bar Sizes

Bridge Component	Maximum Bar Size	Comments
Drilled Shafts	#18	For #14 and #18 bars, no bundling or bar bends
Footings	#11	
Pier Columns	#11 Main reinforcing #6 Ties	
Pier/Bent Caps	#11 Main reinforcing #6 Stirrups	
Webs of Segmental Boxes	#7	

4.4 CONCRETE SURFACE FINISHES

A. See Figure 4.4-1 and Figure 4.4-2 for depiction of areas that are to receive a "Class 5 Applied Finish Coating". This is a concrete texture coating utilized as a final concrete finish. Show appropriate notes in the General Notes and the corresponding sketches on the General Notes drawing. Conventional cast-in-place retaining walls will generally require a "Class 5 Applied Finish Coating". Unless project specific aesthetic goals require its use, in most cases precast portions of proprietary retaining walls do not require a Class 5 Applied Finish Coating.

B. When existing bridges are widened, specify a "Class 5 Applied Finish Coating" on the existing substructures along with the widened portions of the structure where applicable.

Figure 4.4-1 Class 5 Finish at Grade Separation Structures

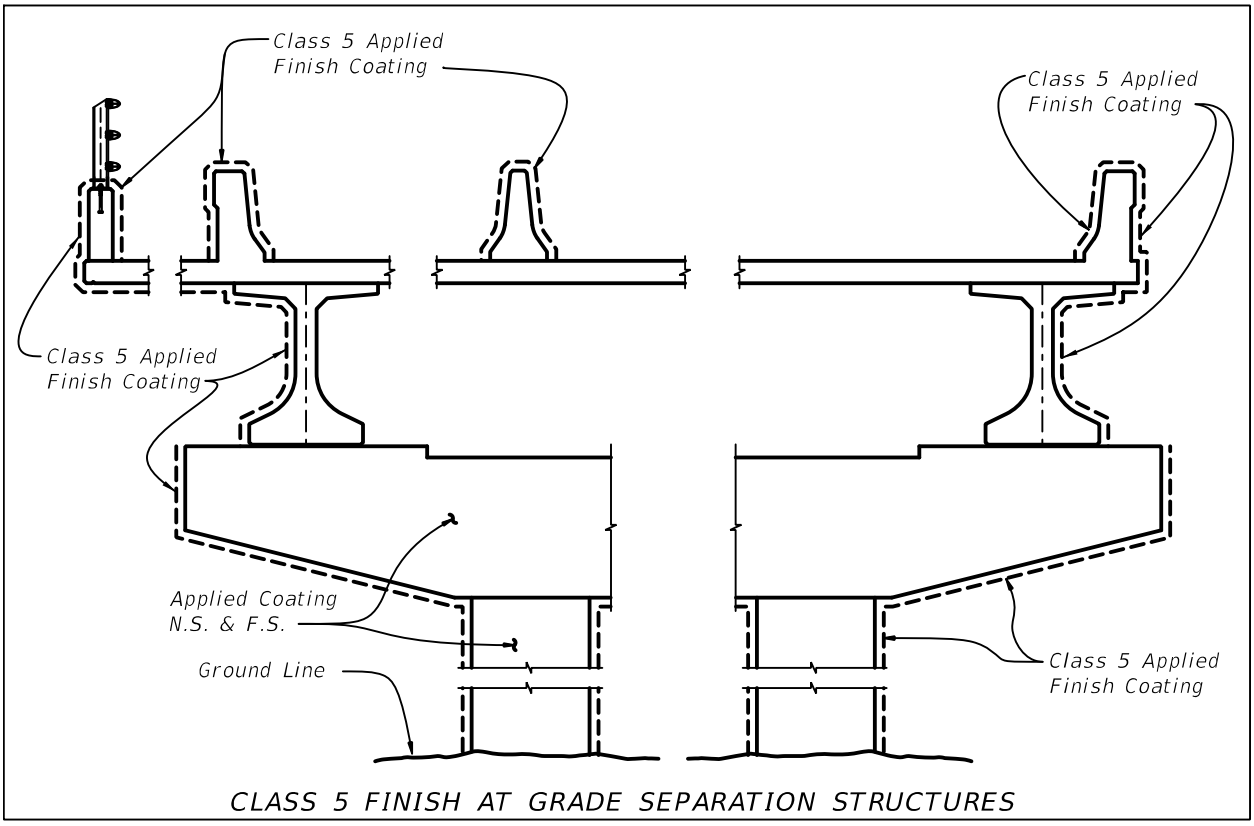

Figure 4.4-2 Class 5 Finish at Waterway Crossings and R.R. Separation Structures

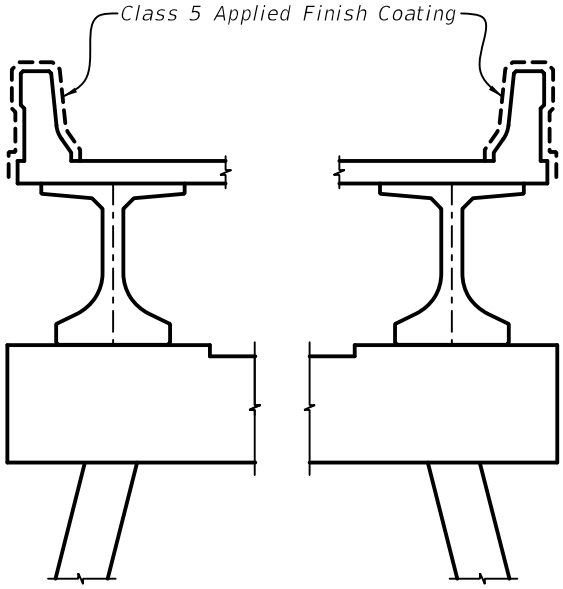

CLASS 5 FINISH AT WATERWAY CROSSINGS AND R.R. SEPARATION STRUCTURES

5 GENERAL NOTES AND BID ITEM NOTES

5.1 GENERAL NOTES (Rev. 01/11)

A. Prepare a complete set of General Notes for each project.

B. As the first item under General Notes, list the version of the Structures Manual and any subsequent Structures Design Bulletins used as the basis for the design of the plans.

C. On projects that require two different construction methods (e.g., prestressed concrete beams and steel girders), show separate General Notes for each method of construction and identify the method to which they apply.

D. Organize notes under headings for Concrete Notes, Steel Notes, etc.

E. Include all General Notes and Pay Item Notes on the General Notes sheet. Notes for a specific element may be shown on the first sheet showing that element. The Index of Sheets is generally a separate sheet but may be included on the General Notes sheet if space permits. Do not include a list of Design Standards in the Index of Sheets.

F. Do not repeat notes or details shown in the Design Standards. Do not use General Notes or any other plan notes to repeat or modify requirements stated in the Specifications. If project specific modifications to the Specifications are required, prepare either a Modified Special Provision or a Technical Special Provision. Contact the District Specifications Office for guidance.

G. Never include proprietary information in a General Note or any other plan notes unless system compatibility is an issue and a signed Public Interest Finding (per FHWA requirements) is on file in the District Specifications Office. Do not specify a product or manufacturer name as this may give preferential treatment to the listed items. Do not use the term "or equal". Use performance criteria. Contact the District Specifications Office for guidance.

5.2 TYPICAL GENERAL NOTES (Rev. 01/11)

The following is a sample of typical notes to be included on the General Notes sheet. Place these notes on the General Notes sheet and modify for project-specific requirements:

A. Design Specifications

1. FDOT Structures Manual dated [January or July] 20XX and subsequent Structures Design Bulletins C[XX-XX], C[XX-XX] and C[XX-XX].
2. American Association of State Highway and Transportation Officials (AASHTO) Load and Resistance Factor (LRFD) Bridge Design Specifications, [4th] Edition and all subsequent interims.
3. FDOT Plans Preparation Manual dated January, 20XX.

B. Construction Specification

FDOT Standard Specifications for Road and Bridge Construction, 20XX Edition and

supplements thereto.

C. Vertical Datum

[Indicate which vertical datum is used on the project - NAVD 88 or NGVD 29].

D. Environment

Bridge Number	Superstructure	Substructure	
		Concrete	Steel
700XXX	Slightly	[Slightly, Mod., Extrem.]	[Slightly, Mod., Extrem.]
407XXX	Moderately	[Slightly, Mod., Extrem.]	[Slightly, Mod., Extrem.]
121XXX	Extremely	[Slightly, Mod., Extrem.]	[Slightly, Mod., Extrem.]

E. Design Methodology

Load Resistance and Factor Design (LRFD) method using strength, service [extreme event] and fatigue limit states.

F. Design Loadings

1. Live Loads: HL-93 with Impact
2. Dead Loads: Traffic Railing 420 plf
   Median Traffic Railing 486 plf
   Stay-In-Place Forms 20 psf
   Reinforced Concrete 150 pcf
   Future Wearing Surface 15 psf
   [OR Design does not include an allowance of 15 psf for Future Wearing Surface.]
3. Vehicle Collision Load: New Pier Columns have been designed to withstand the 400 kip impact load.
4. Utilities: No allowance for utility loads has been included in the design. [If allowance for utility loads has been included, indicate the magnitude and location of the loads used in the design.]

G. Materials

1. Concrete:

Concrete Class	Min. 28-day Compressive Strength (psi)	Location of Concrete in Structure
II	3400	Traffic Railing
II (Bridge Deck)	4500	Bridge Deck
IV	5500	C.I.P. Substructure
V (Special)	6000	Prestressed Concrete Piles
VI	8500	Prestressed Concrete Beams

2. Concrete Cover: [Depends on Environmental Classification]

Cast-In-Place Superstructure (Top of Deck)	2½"
Cast-In-Place Superstructure (Except Top of Deck)	2"
Precast Prestressed Beams (Except Top Surface)	2"
Top Surface of Beam Top Flange	1"
Cast-In-Place Substructure (Cast Against Earth)	4"
Cast-In-Place Substructure (Formed Surfaces)	3"
Cast-In-Place Substructure (Top of Beam Pedestals)	2"

Concrete cover dimensions shown in the plans do not include placement and fabrication tolerances unless shown as "minimum cover". See Specification 415 for allowable tolerances. All dimensions pertaining to the location of reinforcing steel are to centerline of bar except where clear dimension is noted to face of concrete.

H. Applied Finish Coating

A Class 5 Finish Coating shall be applied to the portions of the structures shown on the Surface Finish Detail sheet(s).

I. Plan Dimensions

All dimensions in these plans are measured in feet either horizontally or vertically unless otherwise noted.

J. Utilities

For plan locations of existing utilities, see Plan and Elevation sheet(s). Locations of utilities, including under deck lighting, shown in the plans are approximate. For disposition of utilities, see the Utility Adjustment sheet(s) in the Roadway plans.

K. Bridge Name

Place the following bridge name on the traffic railing in accordance with the Traffic Railing Design Standards:

[Use the name of the bridge or non-roadway facility being crossed or include the name of both facilities for roadway crossings. e.g.:

THOMASVILLE ROAD FLYOVER
TOMOKA RIVER
CSX RAILROAD
US 19 OVER EAST BAY DR

For multiple bridges, identify the associated bridge number, e.g.

Bridge No.	Name
600103	CHOCTAWHATCHEE BAY
600104	CHOCTAWHATCHEE BAY RELIEF]

L. Screeding Deck Slabs

Screed the riding surface of the Bridge Deck and Approach slabs to achieve the Finish Grade Elevations shown in the plans. Account for theoretical deflections due to self weight, deck casting sequence, deck forming systems, construction loads, overlays and temporary shoring, etc. as required.

M. Stay-In-Place Deck Forms

Design includes allowance for 20psf over the projected plan area of the metal forms for the unit weight of the metal forms and the concrete required to fill the form flutes. Stay-in-place forms are not allowed at deck cantilevers. Detail stay-in-place forms to clear top lateral bracing of box girders.

OR: Stay in place deck forms will not be permitted on this project.

N. Joints In Concrete

Construction joints will be permitted only at the locations indicated in the plans. Additional construction joints or alterations to those shown shall require approval of the Engineer.

O. Existing Bridge Construction Considerations

1. Dimension Verification: Unless otherwise noted, the dimensions, elevations and intersecting angles shown are based on the information as detailed in the Original Construction Plans of the existing bridges and may not represent as-built conditions. It is the Contractor's responsibility to verify this data before beginning construction and notify the Engineer of any discrepancies.
2. Existing Reinforcing Steel [Widenings]: All superstructure deck transverse reinforcing steel, both top and bottom layers, and end bent reinforcing steel, shall be protected, salvaged and utilized in the new structure. Cutting of this reinforcing steel and substitution of epoxy bonded dowels is not permitted as a construction option.

P. Traffic Control Plans

[Insert traffic control notes for the project and/or references to the Traffic Control Plans. Refer to ***Design Standards*** Index 600 for specific requirements related to overhead bridge construction.]

Q. Phasing Of Work

Work phasing and progression of the work shall conform to the Traffic Control Plans located in the Roadway Plans and the notes on the Construction Sequence Drawings.

5.3 TYPICAL STEEL GENERAL NOTES

Include the following additional general notes when structural steel is to be used in the project. Place these notes on or after the General Notes sheet and modify for project-specific requirements:

A. Structural Steel

All structural steel shall be in accordance with ASTM A709, Grade 50 or HPS 70W unless otherwise noted. Stiffeners, internal and external crossframes, lateral bracing and other ancillary items may be Grade 36 unless otherwise noted.

B. Charpy V-Notch

All members subjected to tensile stresses identified as main load carrying members shall be tested in accordance with Specification 962.

C. Steel Fabrication

1. All shop splices in flanges or web plates shall be made prior to welding flange plates. All splices shall be indicated on the drawings.
2. Shop assemblies are required in accordance with Specification 460. [Specify shop assembly type based on Specification 460.]
3. All ends of girders, end diaphragms and pier diaphragms shall be vertical after dead load is applied. All intermediate stiffeners, intermediate crossframes and field splices shall be normal to grade.

D. Welding

1. Welds requiring non-destructive testing shall be radiographically inspected, except where the geometry of the region of the weld will not permit satisfactory information to be secured for verification of the weld quality. When such geometrical conditions exist, other inspection procedures or combinations of procedures such as Ultrasonic Inspection, Dye Penetrant Inspection and/or Magnetic Particle Inspection, shall be used. Non-destructive testing shall be performed as required by the current edition of the AASHTO/AWS D1.5 Bridge Welding Code.
2. Field welding to any structural steel for the purpose of attaching erection hardware or for anchoring conduits/boxes for box lighting shall be formally submitted to the Engineer for approval. Shear connector installation is governed by OSHA Steel Erection Rule.
3. The following members are classified as ancillary members in accordance with the current edition of the AASHTO/AWS D1.5 Bridge Welding Code:
   a. Expansion Dams
   b. Drainage Components
   c. Sheet Piling
   d. Bearings

E. Field Connections

All field connections shall be made with [X]" diameter high strength bolts in accordance with ASTM A325 unless otherwise shown. Threads shall be excluded from the shear plane for plate thickness of ¾" or greater adjacent to the nut. Bolt heads shall be on the exterior/exposed face of the girders.

F. Painting

All structural steel shall be painted in accordance with Sections 560 and 975 of the Specifications. Paint all structural steel with a high performance top coat system. The color of the finish coat shall conform to Federal Standard No. 595B, Color No. XXXXX.

For Steel Box Girders:

Paint the inside surface of steel box girders with one shop applied coat of approved primer and a compatible finish coat pigmented to Federal Standard 595B Color No. 37925 (white). Any other color used for the interior finish coat must be pre-approved by the District Structures Maintenance Engineer. The finish coat of the interior surface is not required to be UV resistant and does not have to be the same product as the finish coat of the exterior surface of the box girder.

G. Ladders and Platforms

Structural steel ladders and platforms shall conform to ASTM A36 and shall be hot-dipped galvanized in accordance with Specification 962. Welding shall conform to AWS D1.1.

5.4 TYPICAL PAY ITEM NOTES

Include in the Pay Item Notes information required to define, show limits of quantities or otherwise offer explanation to the list of Bridge Pay Items. All pay item notes should be shown in one location; not scattered throughout the plans. Examples are:

A. For Traffic Control Pay Item Notes, see Roadway Plans.

B. Bid on only one of the alternates designed.

AA - Florida-I Beam Superstructure.

AB - Steel Girder Superstructure.

C. Pay Item No. 400-7 includes __ sq. yards of Approach Slab Grooving.

D. For limits of removal of existing structures (Item Number 110-3), see Sheet No. XX-XX. (List sheets as needed)

Do not include estimated structural steel quantities in the plans.

6 SLOPE PROTECTION

6.1 GENERAL (Rev. 01/11)

A. This chapter provides the bridge designer with the necessary information to develop plan details for appropriate slope protection. In most cases the standard details depicted for slope protection, with minor modifications will be suitable. In some cases, typically in tidal areas or when severe scour conditions exist, special designs and details may be required.

B. Design aids are available for slope protection details in MicroStation .dgn format or may be viewed as a .pdf file. It is the designer's responsibility to make the appropriate project-specific modifications to these design aides before incorporating them into the plan set. Once the appropriate modifications have been made, the designer assumes the responsibility of Engineer of Record.

6.2 GRADE SEPARATIONS

A. For grade separation bridges, design slope pavement on 1:2 front slopes with provisions to extend erosion protection to a minimum of four feet outside the superstructure coping.

B. To protect railroad track embankments, use sand-cement riprap instead of slope pavement.

6.3 WATER CROSSINGS

A. The Drainage (Hydraulic) Engineer will determine the design and extent of the slope protection in accordance with the FDOT ***Drainage Manual*** and other applicable guidelines such as ***HEC-18***. The slope protection for spill-through abutments (End Bents) adjacent to water will usually be rubble riprap. Sand-cement riprap is usually limited to bridges over streams or canals with extremely low, non-erodible flow velocities under all flood conditions. A 1:2 slope is the steepest desirable slope rate.

B. Bulkhead abutments can be protected by sheet piling or precast panels with toe protection provided by rubble riprap. Rubble riprap might also be recommended above the bulkhead or at its ends. Design the protection to extend at least four feet outside the superstructure coping.

6.4 DUAL BRIDGES

Extend the slope protection in the median between dual bridges to include:

A. The entire median width for rural area bridges with a separated median width of forty feet or less.

B. The entire median width for urban area bridges with a separated median width of fifty feet or less.

C. The entire width for urban area bridges inaccessible due to physical barriers or when access is severely limited due to design features or vehicular movement that will impede the ability to maintain the facility.

7 PLAN AND ELEVATION

7.1 GENERAL

A. This drawing is the general layout of the bridge in plan and elevation views.

B. Draw Plan and Elevation views to the same vertical and horizontal scale if possible. In some cases a vertical scale larger than horizontal is required. More than one sheet may be required. If multiple sheets are used, show overlap between sheets for clarity.

C. It is preferred to have the plan and elevation shown on the same sheet.

D. For projects with multiple bridges, include a key map on the plan and elevation sheet showing the location of the subject bridge within the project. If multiple plan and elevation sheets are needed for a single bridge, the key map needs only to be on the first sheet.

E. For examples illustrating the content and format of completed Plan and Elevation sheets, see the ***Structures Detailing Manual Examples***.

7.2 PLAN AND ELEVATION DRAWING - GENERAL

In general, include the following information on the Plan and Elevation sheet(s):

A. The bridge in both plan and elevation views, using an appropriate scale. Label views "PLAN" and "ELEVATION". This is mandatory for Bridge Development Reports and subsequent submittals.

B. All vertical and horizontal geometry including:

1. Horizontal alignment. (Horizontal curve data or Bearing of tangents.)
   a. Show PC and PT stations on plan view.
   b. Use horizontal curve data table cell from the Structures Cell Library for horizontal curve information.
   c. Include superelevation transition diagram where appropriate.
   d. Show bearings of tangents on Station Line.
   e. Vertical and horizontal geometries for intersecting facilities.
2. Vertical alignment (along PGL).
   a. When the bridge is on a tangent grade, show the grade and station and elevation of the nearest points of tangency.
   b. When the bridge is on a vertical curve, use the vertical curve data cell from the Structures Cell Library. Include a reference to the horizontal control line to which it applies. See ***SDM*** Chapter 2.

   When there is not enough space on the Plan and Elevation sheet(s) to show this information, include supplemental Profile Grade and Superelevation Transition sheet(s) as required.

C. North Arrow. Place in upper right corner of sheet when possible.

D. Traffic data (for each facility, if grade separation). Include as a minimum:
   - design speed
   - present and design year (+20) AADT
   - percentage of trucks

E. Adjacent roadway Guardrail, Concrete Barrier Wall and Pier Protection Barriers in Plan and Elevation views. Reference the appropriate ***Design Standard*** Index number.

F. Bridge-mounted lighting, signs and signals and related station/offset information.

G. Distance to nearest milepost from intersection of railroads.

H. All walls (temporary critical, permanent, MSE, etc.). Show graphic depiction and indicate wall type, number and designation.

I. Show shoreline in plan and elevation views using zero contour line or at location of MHW/NHW.

J. All applicable bridge numbers. For dual bridges, show bridge number inside the bridge in the plan view of the corresponding bridge.

K. Roadway lighting, if scale permits.

7.3 PLAN AND ELEVATION DRAWING - PLAN VIEW

At a minimum, include the following in the Plan View of the Plan and Elevation sheets:

A. Baseline, Centerline of Construction and Profile Grade Line(s) (PGL). Label whole stations and include 20ft tick marks. Indicate direction of stationing and station equations as required. Include centerline of lower roadways, canals, railroads, etc.

B. Stations at the following locations:

   1. Begin and end of bridge and approach slabs.
   2. Centerlines of bents or piers.
   3. Intersections of centerlines of lower roadways.
   4. Lower roadway, stream, railroad milepost or other physical feature at the location on the structure plan along the Station Line for the structure. Indicate bearing of tangents if applicable.

C. Skew angle at bents and intersecting base lines. See ***SDM*** 2.14 for details.

D. Direction of traffic. Show one arrow per lane.

E. Roadway width, traffic and pedestrian railing widths, inside and outside shoulder widths, lane widths, median width, sidewalk width, out-to-out width, gore area dimensions, width of widening and width of removal (including removal of slope protection).

F. Critical locations and dimensions of horizontal and vertical clearances. Identify location of low member.

G. Expansion joints. Use a solid line to indicate expansion joints in plan view.

H. Boring locations and labels.

I. All utilities, existing and proposed, buried and overhead. Also indicate status of utilities, e.g. abandoned, to be relocated, etc.

J. Right-of-way lines (roadway, railroad, etc.)

K. Limits of slope pavements, sand cement riprap or rubble riprap. Indicate slope in the following format: V:H. Also indicate type of slope protection and toe of slope location.

L. Edge of shoulder.

M. Berm width.

N. Locations of deck drains that are large enough to be legible. Do not show small bridge scuppers.

O. Fender systems and navigation lights for bridges over navigable waterways. Indicate Heavy, Medium or Light Duty and applicable index number. Indicate clear channel width, centerline of channel and bearing of channel in plan view.

P. Direction of flow of waterway. Indicate if waterway is tidal.

Q. Waterline at MHW/NHW elevation.

R. Limits of environmentally sensitive areas such as wetland lines, seagrass delineations, etc. Ensure that lines shown in the plan view coincide with lines shown in permit applications.

S. Limits of existing bridge. Indicate existing bridge number. Consider hatching area to be removed, if any.

T. Locations of permitted work bridges or platforms. Ensure that the locations of work platforms are consistent with locations shown in any required permits. Alternatively, this information may be shown on Construction Access drawings.

U. Consider showing ship impact zones in plan view.

7.4 PLAN AND ELEVATION DRAWING - ELEVATION VIEW

Show the elevation view of the bridge as viewed along the right coping. Curved bridges may be better represented by a line cut along the centerline of roadway. At a minimum, include the following in the Elevation View on the Plan and Elevation sheets:

A. The elevation (vertical) scale on both sides of the elevation view.

B. Span lengths and overall length of bridge. Label and dimension continuous units/decks.

C. Location of expansion and fixed bearings and integral piers. Label as E, F and I, respectively. Also indicate expansion joints as EJ in elevation view.

D. Existing ground and finished ground profiles, including sections of any intersecting road, railroad, waterway or other physical feature such as buildings or drainage structures, existing or proposed.

E. Low, mean and high water elevations as appropriate.

F. Embankment and canal slopes. Indicate the slope in the following format: V:H.

G. Location and value of minimum vertical clearance.

H. Location of where ground line is taken, i.e. ground line at centerline of construction or groundline at right edge of coping.

I. Roadway widths and clear distances to piers, space permitting.

J. Fenders. Also show clear channel width.

K. Foundation types. Indicate pile or shaft size as applicable.

8 BRIDGE HYDRAULIC RECOMMENDATION SHEET

8.1 PURPOSE

A. This drawing shows all pertinent hydraulic information necessary for the layout of a bridge at the location of a given water crossing.

B. This drawing, prepared by the District Drainage Engineer or a Consultant Drainage Engineer, should be included in the PD&E documents and/or must be in the 30% Plans submittal. This drawing must be included in the final bridge plans.

C. For a typical drawing, see ***PPM Exhibit BHD-1***.

8.2 GENERAL REQUIREMENTS AND DESIGN PROCEDURES

For General Requirements and Design Procedures involving the Bridge Hydraulic Recommendation Sheet, permits and other hydraulic considerations and requirements, see Chapter 27 of the ***PPM*** and the FDOT ***Drainage Manual***.

9 CONSTRUCTION SEQUENCE FOR BRIDGE WIDENING AND PHASED CONSTRUCTION

9.1 GENERAL (Rev. 01/11)

A. The purpose of the Construction Sequence sheets is to show the proposed sequence of bridge construction as well as the maintenance of traffic during bridge widening and/or phased bridge construction.

B. Construction Sequence sheets are a supplement to the Traffic Control Plan (TCP). Ensure that dimensions and phasing, including phase naming conventions, are consistent between the two sets.

C. Provide separate Construction Sequence details for each unique combination of proposed and existing cross sections and superstructure types. Include representative substructure types as required to fully depict individual phases. Show all phases of construction beginning with the existing condition and finishing with the completed proposed section. Show all cross sections looking up station.

D. Check for dimensional consistency between the Construction Sequence sheets and all related construction phasing shown elsewhere in the structures plans.

E. For examples illustrating the content and format of completed Construction Sequence sheets, see the ***Structures Detailing Manual Examples***.

9.2 CONSTRUCTION SEQUENCE DRAWINGS (Rev. 01/11)

At a minimum, include the following in the Construction Sequence sheets:

A. Existing bridge deck cross section(s), superstructure(s) and substructure(s). The first phase in the sequence is the existing bridge deck cross section. Show all existing elements as dashed.

B. Completed proposed bridge typical section(s), superstructures(s) and substructure(s). The final phase in the sequence is the completed proposed bridge typical section. Show all proposed elements as solid.

C. Direction of traffic for all lanes. Indicate traffic traveling up station with an upward pointing arrow and down station with a downward pointing arrow.

D. Dimensions for permanent traffic and pedestrian railings, temporary barriers including minimum clear distances to above ground hazards or drop-offs, shoulders, traffic lanes, bike lanes, median width, sidewalks, and construction and demolition limits at each phase. Reference dimensions to Station Line. Use the same Station Line as used in the Plan and Elevation sheet unless other considerations make this impractical.

E. Indicate required Type K Temporary Concrete Barrier connection to deck, e.g., freestanding or bolted down. See ***Design Standards*** Index 414 for more information and anchoring requirements.

F. Location and disposition of all bridge-mounted utilities during construction and at the final condition. Indicate the type of utility, e.g., FOC, SS, OE, etc. For a complete list of common abbreviations, see ***Design Standards*** Index 001. Wherever possible, indicate nominal dimensions of conduit or pipe.

G. Locations of the deck and substructure cut lines and construction joints. Include location in dimension scheme such that the locations are tied to the Station Line. Use hatching or shading to indicate portion of structure to be demolished in each phase.

H. Phase construction labels. Label each phase of construction as "Phase I Demolition", "Phase II Construction", etc. with the relevant dimension for the limit of construction and/or demolition. Coordinate with and use same naming conventions as the TCP.

I. Cross slope of bridge deck. Indicate whether or not the proposed cross slope matches the existing cross slope. If not, indicate both existing and proposed cross slopes.

J. Right-of-way (ROW) lines. Include Temporary Construction Easements (TCE). Show dimensions from these limits to the limits of construction and to temporary work bridges or platforms.

K. Temporary and permanent walls required for phased construction.

9.3 CONSTRUCTION SEQUENCING CONSIDERATIONS (Rev. 01/11)

Coordinate and balance constructability, safety, economy and traffic control when developing the construction sequence for a phase-constructed bridge. Observe the following guidelines when developing the construction sequence:

A. Be familiar with the space required for each construction activity and ensure that there is enough room between the limits of construction and adjacent ROW lines, TCE lines and live traffic.

B. Be aware of the traffic control devices that may be required in the TCP. Account for widths of temporary barriers, traffic drums, barricades, etc. where their dimensions could affect the limits of construction.

C. Maximize the work area where possible and place as much distance as practicable between construction personnel and traffic. Where construction activities will be directly behind a temporary barrier, traffic drum or barricade, try to limit the duration of the phase through practical methods applied in the plans.

D. Consider bolting or pinning-down Type K Temporary Concrete Barriers to minimize the required clear distance behind the barrier and maximize lane and shoulder width. See ***Design Standards*** Index 414 for more information and anchoring requirements.

E. Coordinate pile driving operations and other foundation activities such that driving leads do not interfere with traffic on the bridge. Be aware of undesirable effects associated with pile driving such as diesel overspray from the hammer or debris from the pile cushion finding its way into live traffic.

F. Consider hammer location when battered piles are required. Avoid phasing where battered piles will be driven from above live traffic or near occupied structures or overhead utilities.

G. Properly address drainage and runoff conditions during construction. Coordinate with roadway and drainage engineers at the earliest stages of the design phase to properly incorporate safe drainage design into the construction sequence.

H. When phasing requires the use of temporary walls, in general use temporary MSE walls for fill conditions and sheet pile walls for cut conditions. If the plans call for a temporary critical sheet pile wall, include a table in the plans showing all design parameters.

I. When existing bridge decks are being removed from existing beams or girders in phases, address the sequence of removal to accommodate differential deflections and to reduce distortions within and between adjacent beams and girders. Consider selectively removing or cutting cross frames on steel I-girder superstructures, and intermediate diaphragms on concrete beam superstructures, prior to deck removal to accomplish this.

J. See also other ***SDM*** chapters for specific phase construction requirements and considerations associated with pile driving, steel erection and deck casting.

K. The Construction Sequence sheets should provide sufficient information to confirm that the proposed bridge is constructible as designed. Include dimensions to R/W lines, TCE lines, existing structures, proposed structures and any other object that will aid the contractor in constructing the project. Show all potential conflicts graphically if applicable. See Figure 9.3-1 for typical dimensions.

Figure 9.3-1 Typical Dimensions Required for Construction Sequence Drawings

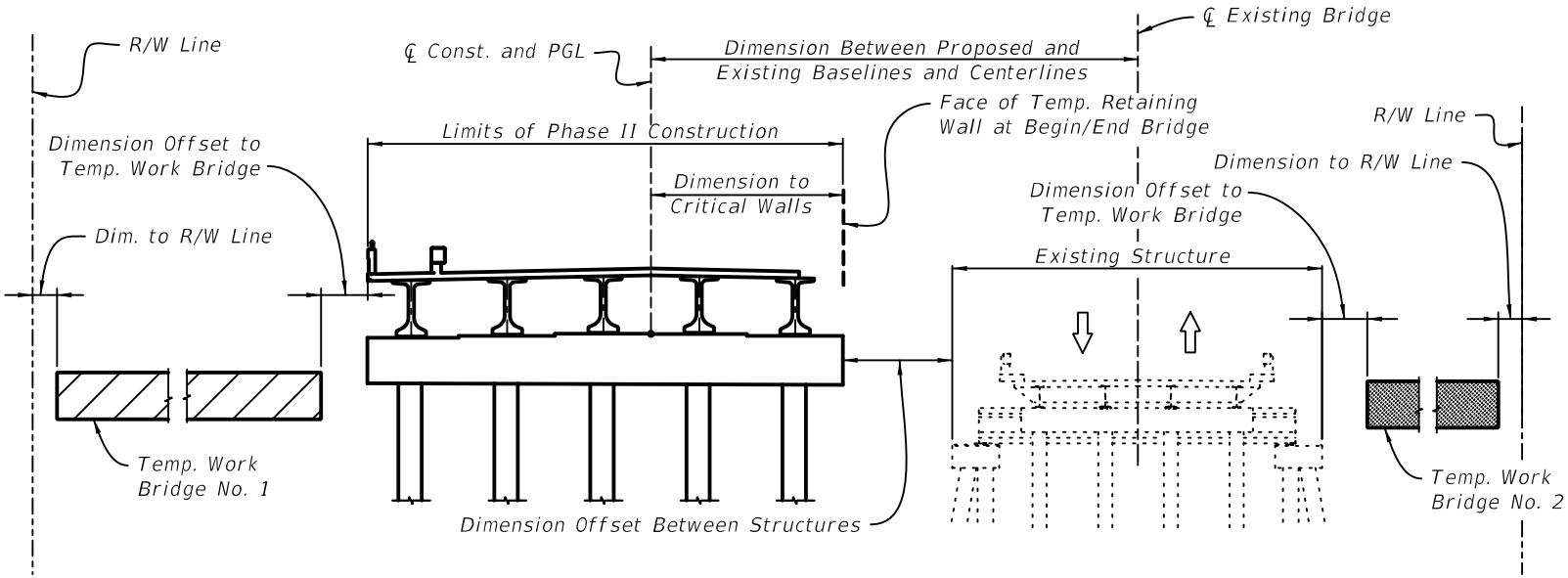

10 REPORT OF CORE BORINGS

10.1 GENERAL

A. This drawing, prepared by the District Geotechnical Engineer or a Consultant Geotechnical Firm, is a graphic portrayal of the subsurface conditions at the project site.

B. The information presented on this drawing and in the Geotechnical Report is used to arrive at a proper foundation design.

C. These drawings should be placed on the correct border found in the Structures Bar Menu.

10.2 SCALES

A. Draw the boring layout plan and boring logs in elevation to a scale large enough to legibly show the data and permit reasonable determination and interpretation of soil strata variations.

B. The vertical scale of the boring logs must be large enough to permit inclusion of all relevant boring data and need not be the same scale as the boring layout.

C. Selected scales must provide 100% legibility when reproduced to 11-inch x 17-inch prints.

10.3 DRAWING CONTENT

The following data should appear on the Report of Core Boring sheet(s):

A. Plan View (Boring Layout):

1. Station Line (show station values at 100-foot increments)
2. Station Line label (Base Line Survey, Center Line Construction, etc.)
3. North Arrow
4. Begin and end bridge stations and labels
5. Boring locations referenced to station line by station and offset
6. Boring labels

B. Elevation View (Boring Logs):

1. Elevation reference (vertical scale) on both left and right side of sheet (borings must be plotted in reference to elevation, not depth below ground surface)
2. Boring plots, labels, stations, offsets. (Use the soil-type symbols specified in the current ***Soils and Foundations Handbook***)
3. Ground surface elevation

4. Ground/surface water level and date recorded (note elevation of artesian head if encountered)
5. Strata description including Unified Classification Symbols
6. Standard Penetration Test (SPT) N-values
7. Rock Core Locations,% recoveries, RQD
8. Undisturbed soil sampling locations
9. Lab test results
10. In situ test locations (vane shear test, dilatometer test, pressure meter test, etc.) and corresponding test results
11. Note unusual circumstances such as: sudden drop of split spoon, loss of circulation, etc.

C. Other:

1. Soil Legend
2. Rig Type
3. SPT Hammer Type (Safety Hammer or Automatic Hammer)
4. Environmental Classification (superstructure, substructure)
5. Financial Project ID
6. Completed Title Block

10.4 TITLE BLOCK

A. The title of this drawing is "REPORT OF CORE BORINGS".

B. Show the names of the drillers who performed the borings, and the responsible Geotechnical Engineer.

11 FOUNDATION LAYOUT

11.1 GENERAL

A. This drawing shows a plan view of all spread footings, piling or drilled shafts and provides all information necessary for locating their positions in the field.

B. Use the same orientation as is shown on the Plan and Elevation sheets.

C. For examples illustrating the content and format of completed Foundation Layout sheets, see the ***Structures Detailing Manual Examples***.

11.2 FOUNDATION LAYOUT DRAWING (Rev. 01/11)

At a minimum, include the following on the Foundation Layout sheets:

A. Station Line at the scale required for clarity. Use the same Station Line referenced in the Plan and Elevation sheet.

B. Direction of stationing adjacent to the Station Line preferably at the extreme ahead or back station.

C. A plan of the substructure foundations such as a dashed outline of footings, bent caps, etc. Show substructure outline when considered critical for construction.

D. All horizontal curve data (or reference if shown elsewhere) including bearings of tangents.

E. Substructure stations on the Station Line. The substructure station is the intersection of the Station Line and the intermediate substructure centerline or begin/end of bridge at the front face of backwall (FFBW). For end bents, dimension the distance between FFBW and the centerline of piles.

F. On the Station Line, show the angle between intersecting reference lines.

   1. For bridges with straight (tangent) alignment, show the skew angle.

   2. For bridges with a single horizontal curve, show the angle between the substructure centerline or FFBW and the tangent to the station line at the intersection point.

   3. For bridges with multiple horizontal curves, combination of horizontal curve(s) and tangent(s), spiral curve(s), multiple consecutive tangents without horizontal curves or other complex alignments, show the angle between the substructure centerline or FFBW and the tangent to the station line at the intersection point and use coordinates to locate working (control) points for the substructure along the centerline of intermediate supports (piers or bents) or FFBW. Tie coordinates to the Florida State Plane Coordinate System.

G. The distance between the working (control) point or intersection point and adjacent pile or drilled shaft clusters, the center of footings, drilled shafts, or individual piles. In addition:

   1. Other foundation units may be dimensioned from adjacent foundations.
   2. Dimension pile or drilled shaft spacing within a cluster.
   3. Show proposed footing outlines as dashed where required for clarity.

H. All overhead and buried utilities and existing foundations in the vicinity and offset dimensions if applicable. Also indicate status of utilities, e.g. proposed, abandoned, to be relocated, etc.

I. Boring locations and labels.

J. Show test, production, existing and tension piles or drilled shafts using a unique symbol for each. Use a legend to define these symbols. Exaggerate pile or drilled shaft sizes when necessary for clarity.

K. Pile or drilled shaft sizes.

L. Indicate the amount and direction of battered piling. Indicate the control point for battered piles as the intersection of the center of pile and the bottom of footer or bottom of bent cap. All related dimensions should reference this point.

M. Pile or shaft numbers. Number piles or shafts in each substructure unit sequentially, beginning with "1" from left to right when facing the Direction of Stationing, then from extreme back station to extreme ahead station. Restart numbering at each substructure unit. This numbering scheme is not to be confused with the pile driving or shaft construction sequence. See ***Specifications*** Section 455 for more information.

N. Location of temporary critical walls in the immediate vicinity of foundation construction and/or phased construction. Indicate wall type. Reference the appropriate sheets for wall control drawings and details.

O. Sequence of construction limits. Indicate which portions of the foundation are to be constructed in each Phase of the construction sequence, if applicable.

P. Location and detail of existing and proposed foundations in the vicinity. This includes sign structure supports, retaining walls, tie backs or any other feature that may pose a potential conflict. To the extent possible, dimension existing foundations (including relic foundations of previously removed bridges) and indicate their distance from known reference points such as proposed foundations, station lines, etc. Clearly indicate existing piles that may conflict with proposed foundation elements (accounting for placement and batter tolerances) that need to be removed. Be aware of mud seal slabs which are typically larger than footing dimensions. Coordinate with the appropriate permitting agencies for direction on the removal of foundation elements, disposal of spoil, etc. In general, it is preferable to be conservative when estimating potential conflicts.

Q. North arrow, in upper right corner of sheet.

R. Right-of-way lines (roadway, railroad, etc.) and temporary and permanent easements.

S. Fender system piles.

T. Shoreline at MHW elevation.

U. Cofferdam locations. Show sheeting required to build cofferdams.

V. Existing buried sheet pile wall anchors.

11.3 FOUNDATION LAYOUT DESIGN CONSIDERATIONS (Rev. 01/11)

To ensure a constructible, economical foundation design, incorporate the following guidelines when developing the foundation layout sheets:

A. Be aware of potential conflicts and/or vibration impacts on existing buildings due to foundation installation operations. For example, ophthalmologists (eye doctors), hospitals, schools, research facilities may all be negatively affected by even slight vibrations caused by foundation installation operations.

B. Test piles should be driven in Phase I for phased-constructed bridges where possible.

C. Ensure that there is sufficient overhead clearance to drive piles. Possible conflicts include overhead utilities, existing bridges and flight glide paths for bridges near airports.

D. It is strongly advised that all critical utilities be identified using Vvh (verified vertical elevation and horizontal location) methods during the design phase. Coordinate with the District Utility Engineer for determining which utilities are considered critical.

E. Additional requirements may be placed on the removal of existing foundations, excavation, transportation and disposal of contaminated materials by permitting agencies. Foundation layout plans, including removal of existing structures, disposal of spoil, disturbing environmentally sensitive areas, etc., must adhere to all permit requirements. This is especially important in the case of existing bascule piers with mud-line foundations that may need to be completely removed to facilitate the placement of a fender system, future dredging or channel pier foundation construction.

F. Investigate adjacent structures, including buildings, for possible deep foundation conflicts. Consider the possibility of existing battered piles obstructing the proposed bridge foundation. Retaining walls, tie backs and dead man anchors pose potential conflicts and should be considered during the design phase.

G. Also see the ***Soils and Foundations Handbook*** for additional information.

11.4 PILE DATA TABLE

The pile data table is located in the Structures Bar Menu in CADD. Do not add or delete columns within in the Installation Criteria or Design Criteria sections of the table; if information in the column is not pertinent to the project, populate the data cell with "N/A". What follows is a column-by-column description of the information to be used when filling out the data table. See ***SDG*** 3.5 and the ***Instructions for Design Standards (IDS)*** Index 20600 instructions for additional information.

A. Pier or Bent Number: Indicate in which pier or bent the piles are located. For pile groups within a single substructure unit that have different criteria, designate different pile groups in this column.

B. Pile Size: Indicate the standard pile size being used. For round piles, indicate diameter. Show all dimensions in inches. See ***Design Standards***.

C. Nominal Bearing Resistance: See Eq. 3.1 in ***SDG*** 3.5.

D. Tension Resistance: Indicate the required capacity of the pile to resist uplift in tons.

E. Minimum Tip Elevation: Indicate the minimum tip elevation required for lateral stability or to resist uplift. Round elevations down to the nearest foot. Do not use tenths.

F. Test Pile Length/Pile Order Length: Include the test pile length as provided by the geotechnical engineer on projects with test piles. Change “Test Pile Length (ft.)” to “Pile Order Length (ft.)” on the table heading for projects without test piles and include the pile order length as provided by the geotechnical engineer.

G. Required Jet Elevation: Indicate the required elevation that the piles should be jetted to as provided by the geotechnical engineer.

H. Required Preform Elevation: Indicate the elevation to which holes will be preformed to as provided by the geotechnical engineer.

I. Factored Design Load: Indicate the factored loads calculated during design.

J. Downdrag: Indicate the anticipated downdrag load as provided by the geotechnical engineer.

K. Total Scour Resistance: An estimate of the ultimate static side friction resistance provided by the scourable soil, as provided by the geotechnical engineer.

L. Net Scour Resistance: An estimate of the ultimate static side friction resistance provided by the soil from required preformed or jetting elevation to the scour elevation, as provided by the geotechnical engineer.

M. 100-Year Scour Elevation: Estimated scour elevation due to the 100 year storm event, found on the Bridge Hydraulic Recommendations sheet. Round elevation down to the nearest foot.

N. Long-Term Scour Elevation: Estimated scour elevation used in design for extreme event loading, found on the Bridge Hydraulic Recommendations sheet. Round elevation down to the nearest foot.

O. Resistance Factor: As provided by the geotechnical engineer.

P. Pile Cut-Off Elevations: Indicate the pile cut-off elevation to the nearest tenth of a foot. Edit Pile Cut-Off Elevation table columns or make a separate table for pile cut-off elevations if necessary.

11.5 DRILLED SHAFT DATA TABLE

Modify the pile data table for use on projects with drilled shafts as outlined in this section. The drilled shaft data table should be used on all projects with drilled shafts. Do not add or delete columns; if information in the column is not pertinent to the project, populate data table with "N/A". What follows is a column by column description of the information to be used when filling out the data table. See ***SDG*** 3.6 for additional information.

A. Pier or Bent Number: Indicate in which pier or bent the shafts are located. For shaft groups within a single substructure unit that have different criteria, designate different shaft groups in this column.

B. Shaft Size: Indicate the shaft diameter in inches. See ***Basis of Estimates*** for commonly available auger sizes.

C. Tip Elevation: The highest elevation the tip of the shaft can be constructed without authorization from the Engineer. As provided by the geotechnical engineer, round elevations down to the nearest foot.

D. Minimum Tip Elevation: The highest elevation allowed due to lateral stability and/or uplift requirements. As provided by the geotechnical engineer, round elevations down to the nearest foot.

E. Minimum Rock Socket Length: Indicate the minimum rock socket length as recommended by the geotechnical engineer.

F. Minimum Top of Rock Socket Elevation: As provided by the geotechnical engineer, indicate the anticipated elevation of layer in which top of the shaft socket will begin.

G. Factored Design Load: Indicate the factored loads calculated during design. Round loads up to the nearest ton.

H. Downdrag: Indicate the anticipated downdrag load. As provided by the geotechnical engineer, round up to the nearest ton.

I. Long Term Scour Elevation: Estimated scour elevation used in design for extreme event loading, found on the Bridge Hydraulic Recommendations sheet. Round elevation down to the nearest foot.

J. 100-year Scour Elevation: Estimated scour elevation due to the 100 year storm event, found on the Bridge Hydraulic Recommendations sheet. Round elevation down to the nearest foot.

K. Resistance Factor (phi): As provided by the geotechnical engineer.

L. Consider Nonredundant: See ***SDG*** 3.6.

12 SUBSTRUCTURE - BENTS

12.1 GENERAL

A. This Chapter covers end bents as well as intermediate bents.

B. Bent sheets will include all details necessary for the layout of the bent, bar placement and quantity estimation.

C. Show all views of the bent and sections required to construct the bent. For some structures, this may require more details than others.

D. See ***SDM*** Chapter 4 for details related to Concrete Components.

E. For examples illustrating the content and format of completed End Bent sheets, see the ***Structures Detailing Manual Examples***.

12.2 DRAWINGS AND DETAILS - GENERAL (Rev. 01/11)

The following details should be included in the End Bent or Intermediate Bent sheets, as applicable:

A. Plan and elevation views.

B. With the exception of End Bent 1, elevation views are typically shown looking ahead station. If it is necessary to show the view looking back station, then the view must be labeled accordingly.

C. Dimensions along front face of backwall (FFBW) or centerline cap to Station Line. Dimensions should be comprehensive to allow for complete layout of the bent. Some duplicate dimensions should be included to assist the contractor in verifying field measurements. Tie all dimensions to the horizontal control line.

D. Direction of Stationing in Plan View.

E. Angle between Station Line and FFBW or centerline cap.

F. Phase construction limits. Indicate the length along the FFBW or centerline cap to be constructed in each phase. Use separate details and sketches where necessary.

G. Existing structure removal limits. Indicate the length along the FFBW or centerline cap to be removed. Hatch existing sections showing removal limits. Use separate details and sketches where necessary or if existing plans are not available. Location of piling is critical in partial removals; therefore it is essential to locate during the design process.

H. Elevations at all locations critical to layout including:

   1. Pedestal/beam seat elevations.

   2. Top of backwall at ends, slope break point and phased construction limits.

   3. Top and bottom of bent cap at ends, slope break point and phased construction limits.

4. Top of cheekwall.
5. Coping elevation at FFBW.
6. Wing wall elevations at similar locations.

Elevations may be tabulated if necessary for clarity.

I. Beam/girder centerlines. Indicate beam/girder number on each centerline. Indicate the acute angle between the beam centerline and the centerline of bearing for each beam or show as "Typical". For bridges with horizontally curved geometry, indicate the beam angle with respect to a line tangent to the curve at the intersection of centerline of bearing. Dimension beam spacing with respect to the bent cap and label as "Beam Spacing".

J. Pile or drilled shaft locations. Dimension pile or drilled shaft spacing with respect to the bent cap and label as "Pile/Drilled Shaft Spacing". Indicate pile batter. For battered piles, indicate where the cutoff elevation is given to, e.g., centerline of pile.

K. Pedestal / stepped cap spacing and dimensions. Dimension pedestal / stepped cap spacing with respect to the bent cap.

L. Centerline(s) of bearing and centerline of piles / drilled shafts. Dimension offset from centerline cap or FFBW and the centerlines if not coincident.

M. Pedestal details including reinforcement, concrete cover, preformed anchor bolt blockout locations & reinforcement embedment. Ensure that pedestal steel and preformed anchor bolt blockouts do not conflict with top reinforcement in bent cap.

N. Estimated quantities, including phasing and component breakdown.

O. Plan view of drilled shaft reinforcement. Detail how drilled shaft reinforcement will tie in to bent cap reinforcement.

P. Utility and drainage details. If a utility or drain pipe passes through end bent backwall, show reinforcement scheme and include bars in reinforcing schedule.

Q. Connection details for widenings. Indicate whether existing steel is to be lapped with new steel or if threaded couplers or drilling and doweling are required. Include detail for drill and dowel to replace damaged existing rebar that is to be incorporated into the completed bridge.

R. Keyways and construction joints. Show keyways and construction joints between backwall and bent cap, at ends of cap for phased construction and anywhere else required.

S. Preformed anchor bolt blockout locations. Preformed anchor bolt blockouts should be 4-inch diameter minimum. Completely detail blockouts and verify there are no conflicts with reinforcement.

12.3 DRAWINGS AND DETAILS - END BENT

In addition to the applicable detailing recommendations above, show the following when detailing End Bent sheets:

A. End bent plan and elevation views. It is generally preferred to show plan and elevation views for each end bent on a separate sheet, even if there is a great deal of similarity.

B. Begin and End bridge stations at intersection of FFBW and Station Line. Tie all dimensions back to the Station Line or the PGL whichever, is within the limits of the bent. Show dimension to the Station Line when not within the limits of the bent.

C. Outline of approach slab in elevation view.

D. Section of end bent. Section should include the backwall and include enough information for layout and bar placement. More than one section may be needed. Indicate location where all sections are taken on the end bent plan and elevation sheets.

E. Cheekwall detail showing reinforcing details. Up to four views may be required for skewed bridges and bridges with other conditions due to varying dimensions.

F. Location of soil reinforcing strap(s) at backwall when MSE walls are present. Also indicate the required load for the soil strap if it is to be designed by a separate engineer.

G. MSE walls should be shown in the plan and end bent section views when necessary. Ensure there are no conflicts between battered piles and MSE wall straps or MSE wall panels.

H. Wing wall details. Wing wall plan, side view and section should be shown on a separate sheet. Detail wing wall cap level.

I. Corner chamfers greater than ¾". On bents with skews greater than 30 degrees, chamfer acute corners a minimum of 4".

12.4 DRAWINGS AND DETAILS - INTERMEDIATE BENT

In addition to the applicable detailing recommendations in Section 12.2 above, the following issues should be addressed when detailing Intermediate Bent sheets:

A. Plan and elevation views. It is generally allowed to show a single intermediate bent sheet provided there is adequate similarity from bent to bent and enough room on the sheet for legibility.

B. Pedestal details. Stagger pedestals to accommodate skewed beams. For staggered pedestals, center the pedestal about the intersection of the centerline of beam and centerline bearing.

12.5 DESIGN CONSIDERATIONS - GENERAL (Rev. 01/11)

Constructability, site concerns, economy and durability must be taken into account when developing bent plans and details. The following considerations provide guidelines for the designer and detailer:

A. Make sure the dimensions of the bent are compatible with the bearing pad selection and skew. Place bearing pads orthogonal to the centerline of the beam wherever possible except where specifically shown to be skewed on the ***Design Standards***.

B. If loads and soil conditions permit, place beams directly over piles. Minimize the offset distance between the centerline of piles and centerline(s) of bearing.

C. Avoid double stirrups whenever possible by using a larger stirrup size and/or tighter stirrup spacing. Due to restrictions on bending during fabrication, #6 bars are generally the largest practical stirrup size. Keep stirrup spacing constant between piles. If triple stirrups are required, increase bent cap size.

D. A minimum height of 4" is required for all pedestals not poured monolithically. For aesthetic purposes, pedestals generally should be no more than 12" tall for bents supporting similarly-sized beams. If the pedestal exceeds 15" maximum height, step or slope cap to reduce pedestal height. Bents with beams of different heights are exempt from the 15" maximum height.

E. Size bent caps to accommodate pile driving tolerances, drilled shaft placement tolerances, bearing pad requirements, superstructure expansion joints or any other consideration that affects bent cap width. Generally, on bents with double bearings the bearing dimension requirements will control. For bents with large piles or drilled shafts, the shaft or pile dimension plus tolerances will control. See Figure 12.5-1 and Figure 12.5-3.

F. Where pier columns are supported by single drilled shafts without footings, set top of drilled shafts 1 foot below ground line. Set top of drilled shafts a minimum of 1 foot above normal or mean high water except for bridges over flood plains. Set top of drilled shafts a minimum of 1 foot above the 100 year flood elevation for bridges over flood plains. Detail caps and/or columns extending above drilled shafts to accommodate shaft placement tolerances.

Figure 12.5-1 Minimum Cap Width for Caps with Double Bearings 1 of 2

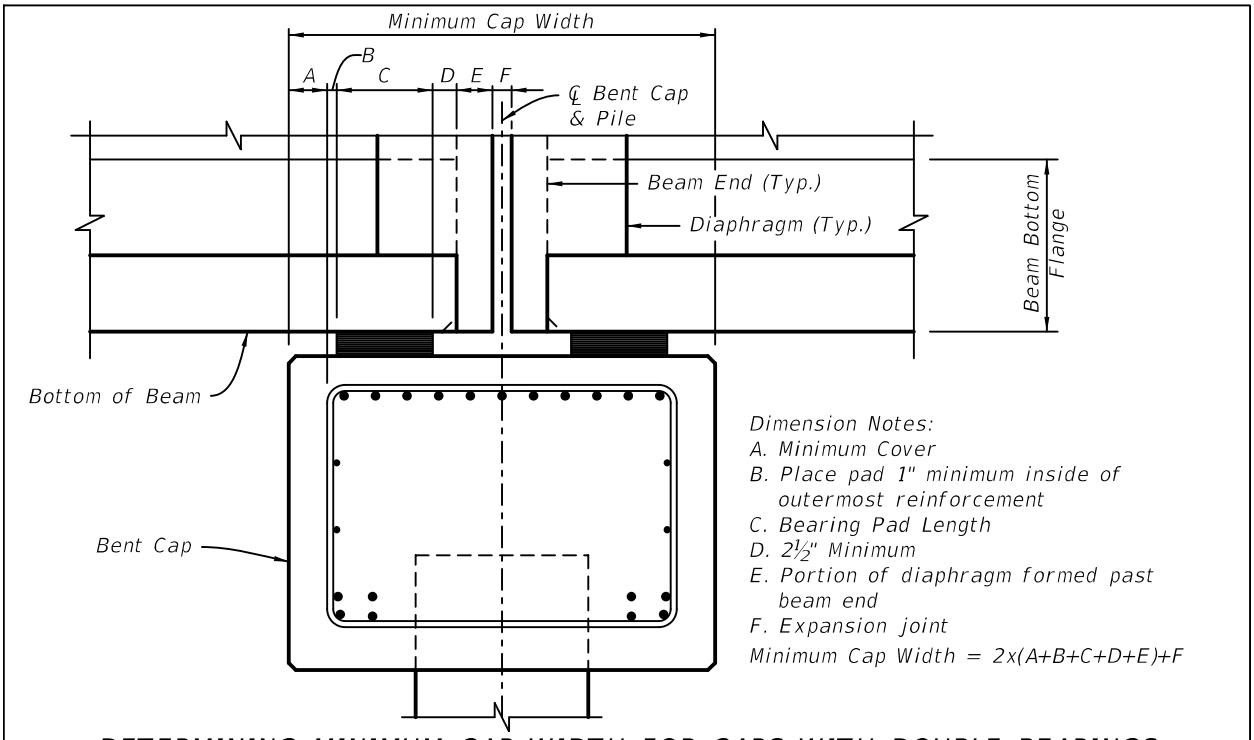

DETERMINING MINIMUM CAP WIDTH FOR CAPS WITH DOUBLE BEARINGS PLACED PARALLEL TO EDGE OF CAP AND BEAMS WITH END DIAPHRAGMS

Figure 12.5-2 Minimum Cap Width for Caps with Double Bearings 2 of 2

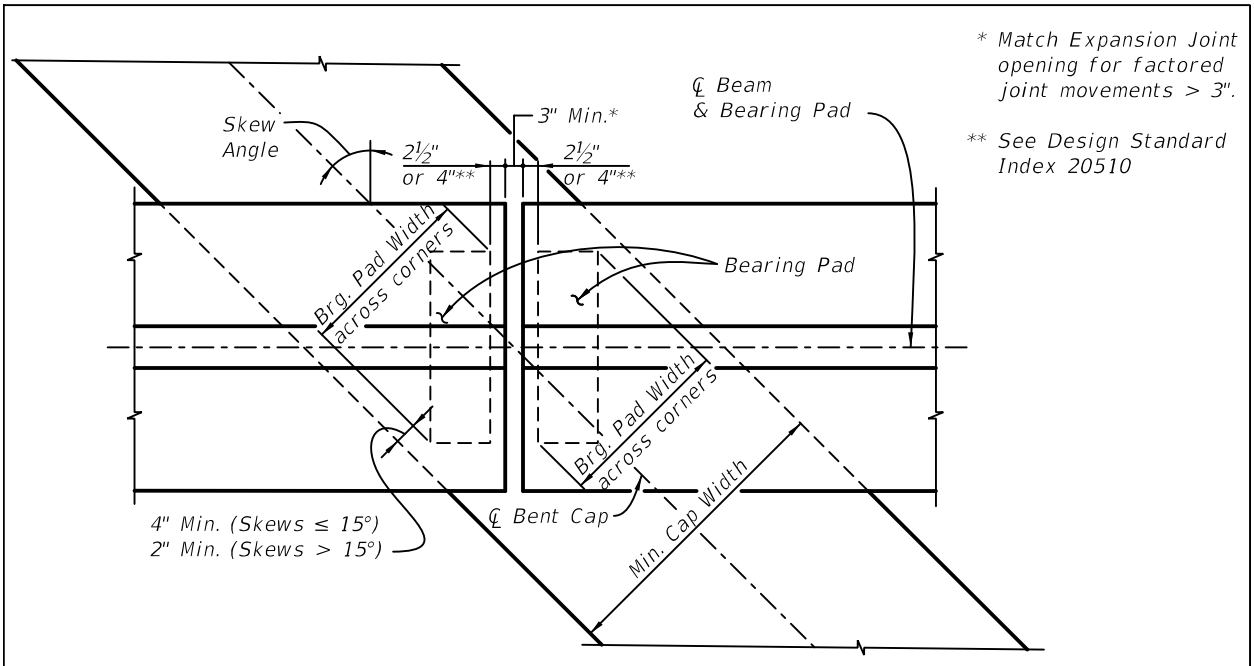

MINIMUM CAP WIDTH FOR CAPS WITH DOUBLE BEARINGS ON A SKEW

Figure 12.5-3 Minimum Cap Width When Pile Size Controls

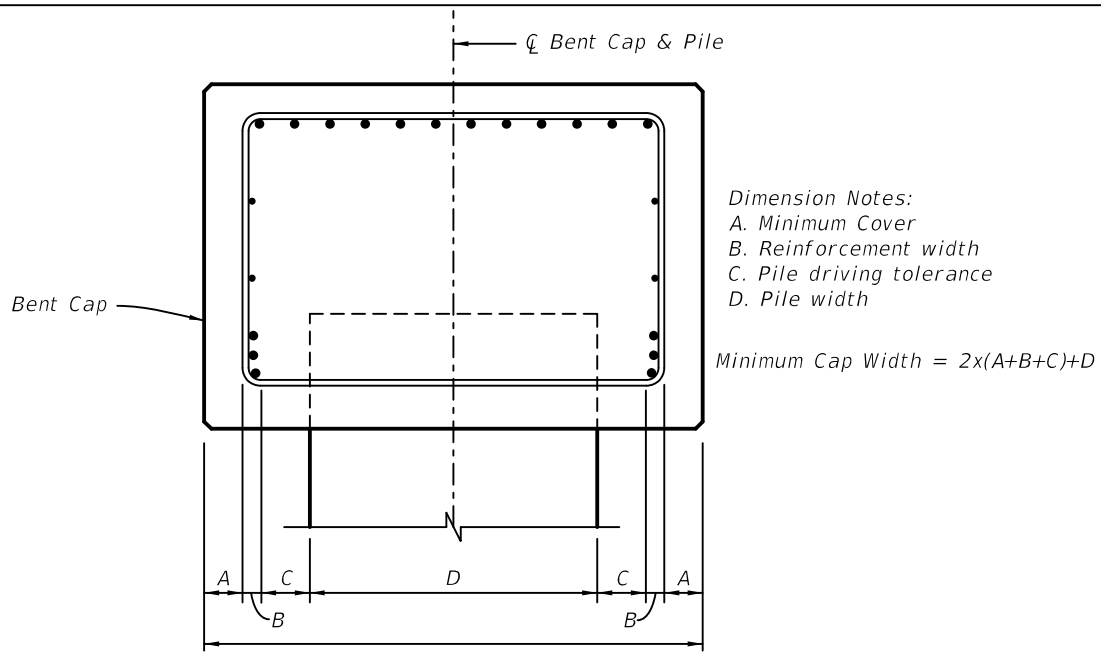

DETERMINING MINIMUM CAP WIDTH WHEN PILE SIZE CONTROLS

Figure 12.5-4 Minimum Cap Width When Shaft Size Controls

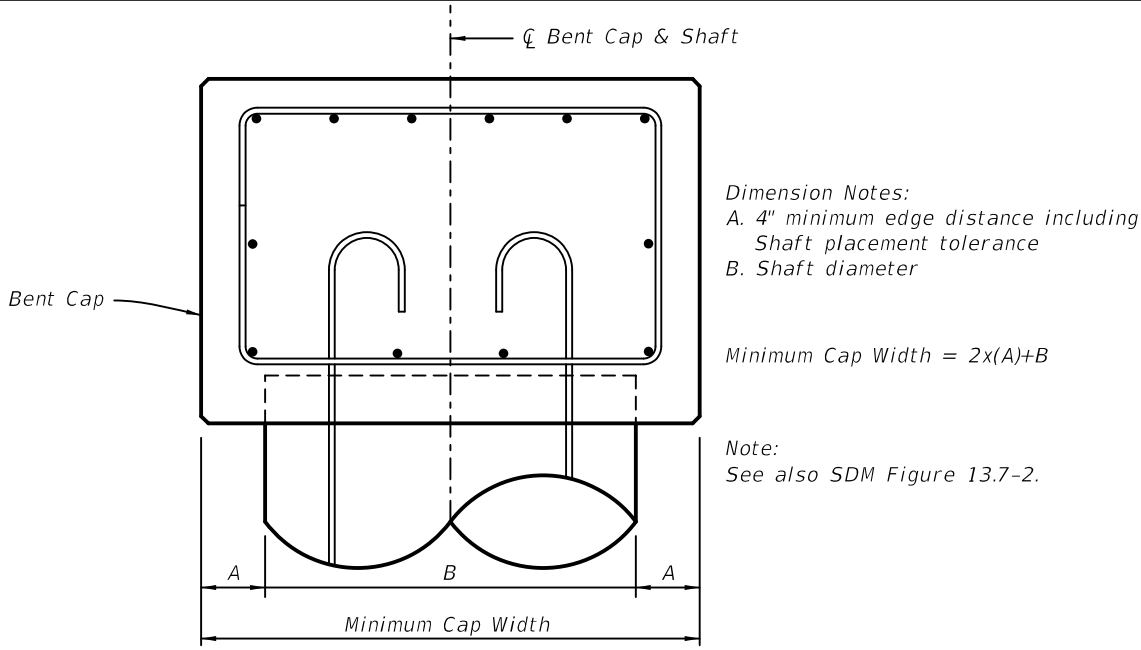

DETERMINING MINIMUM CAP WIDTH WHEN SHAFT SIZE CONTROLS

12.6 DESIGN CONSIDERATIONS - END BENT (Rev. 01/11)

In addition to the applicable design considerations above, the following issues should be addressed when designing end bents:

A. When calculating elevations, allow for a minimum of 2" of clearance between the top of cheekwall and bottom of deck slab.

B. Minimum thickness for cheekwalls is generally 8". Backwalls and wingwalls are generally no less than 12" thick and may be thicker as required by design. When wingwalls are present on an end bent, make cheekwalls flush with wingwalls so that the outside surface is one continuous plane.

C. For end bents with backwalls greater than 50 feet in length, require vertical construction joints in backwall at a maximum of every 25 feet. Include construction joint detailed to ensure shear transfer. Place filter fabric behind backwall at all joint locations.

D. Consideration should be given to the possible need for future utilities to pass through end bent backwalls. In some instances, it may be beneficial to construct the backwall with openings intended for future use. In these cases, casting threaded inserts in the underside of the deck for future utility hangers would also be required. Design loads should include these future utilities.

E. For end bents built in conjunction with MSE walls, detail the bottom of the MSE wall coping to be flush with the bottom of the end bent cheekwall. See Figure 12.6-1.

Figure 12.6-1 End Bent Cheekwall Detail at MSE Wall

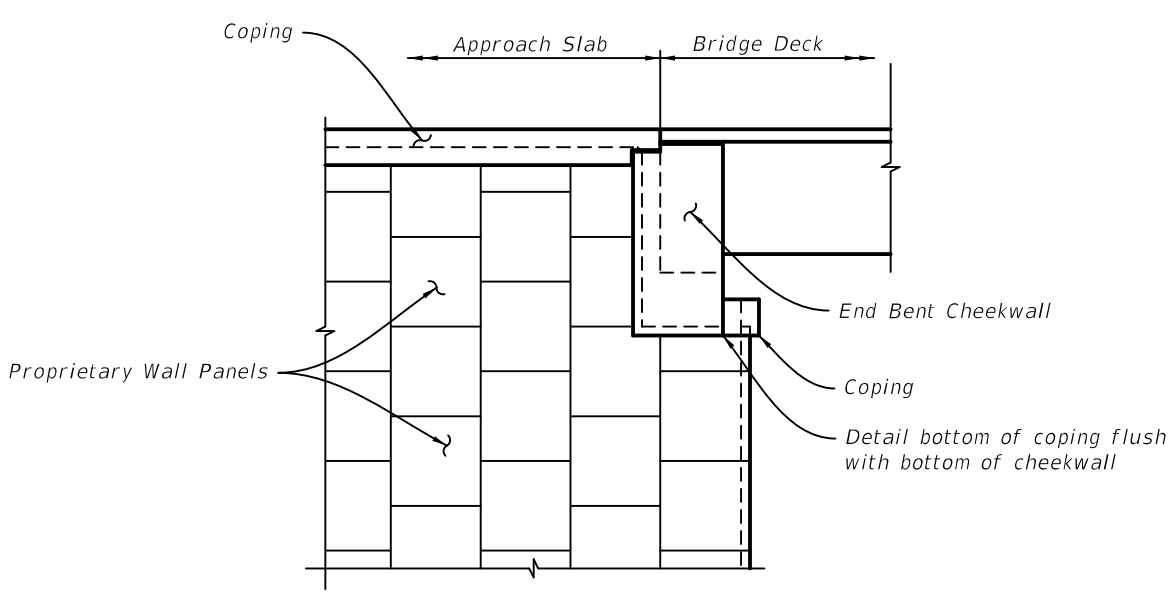

END BENT CHEEKWALL DETAIL AT MSE WALL

F. Due to the differential settlement that will occur between the approach embankment and the end bent, do not use spread footings to support wingwalls that are attached to pile or drilled shaft supported end bents. Generally, wingwalls longer than 10' must be supported by piles or drilled shafts. Shorter wingwalls may be designed as cantilevers.

12.7 DESIGN CONSIDERATIONS - INTERMEDIATE BENT

In addition to the applicable design considerations in Section 12.5 above, the following issues should be addressed when designing intermediate bents:

A. During the preliminary design phase of water crossings, avoid placing intermediate bents in the center of the channel. This may help avoid scour issues and reduce pile lengths. Coordinate with the drainage engineer to achieve a good balance between span lengths and minimizing hydraulic issues.

B. To help reduce costs and constructability issues, minimize the use of battered piles. Be aware of conflicts battered piles may have with utilities, existing foundations or other underground obstructions.

13 SUBSTRUCTURE - PIERS

13.1 GENERAL

A. This Chapter covers multiple column, hammerhead, integral, straddle and C-piers, footings and aesthetic requirements.

B. Pier sheets will include all details necessary for the layout, reinforcement placement and quantity estimation of the pier column, cap and footing.

C. Show all views of pier and sections required to construct the pier. For some structures, this may require more details than others.

D. See ***SDM*** Chapter 4 for details related to Concrete Components.

E. To allow detailing piers at a more legible scale, detail pier caps, columns and footings for larger piers on separate sheets. Number the sheets in the order the components will be constructed, footings first, followed by columns and finally pier caps.

F. For examples illustrating the content and format of completed Pier sheets, see the ***Structures Detailing Manual Examples***.

13.2 PIER DRAWINGS AND DETAILS - GENERAL (Rev. 01/11)

Sections 13.2 thru 13.6 cover multi-column piers as well as other specialty types of piers such as Hammerheads, C-piers, straddle piers, integral piers, etc. Design considerations unique to these types of piers are addressed in subsequent sections. At a minimum, all Pier sheets should include the following:

A. Plan and elevation views (front and side).

B. If there is a great deal of similarity, a typical pier sheet may be used. Show all differing information such as dimensions, elevations, quantities, etc. in tabular format. If a pier is wider than can be shown clearly on one sheet, split the view into multiple sheets, while still maintaining the stacked plan and elevation format. Show matchlines on each sheet.

C. Phase construction limits. Indicate the length along the centerline pier to be constructed in each phase. Use separate details and sketches where necessary.

D. Existing structure removal limits. Indicate the length along the centerline cap to be removed. Hatch sections to be removed. Use separate details and sketches where necessary.

E. Pedestal spacing and dimensions. Dimension pedestal spacing with respect to the pier cap.

F. Centerline(s) of bearing. Dimension offset from face of pier to one or both centerlines of bearing.

G. Section of pier cap and pier column. Multiple sections may be required for non-prismatic members. Indicate locations where all sections are taken on the pier plan and elevation sheets.

H. Detail showing architectural treatments such as ribbing, striations or rustication. Measure concrete cover from the deepest part of relief. See Figure 13.2-1.

Figure 13.2-1 Hammerhead Pier Rustication

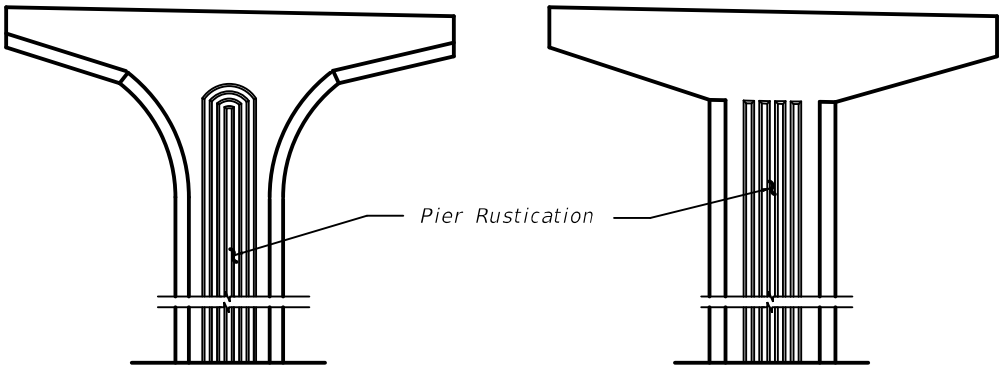

ELEVATION VIEW - HAMMERHEAD PIERS
(Flush Pier Face w/ Rustication Shown)

I. Pedestal details including reinforcement, concrete cover, preformed anchor bolt blockout locations & reinforcement embedment.

J. Drain pipes. Show connections, cleanouts, elbows and all other necessary parts. A minimum of one cleanout in each vertical and one cleanout in the lateral is required. Check for conflicts with rebar, post-tensioning ducts, anchor bolts, etc. See ***SDM*** Chapter 22 for Drainage Requirements on Bridges.

K. Locations for anchor bolt blockouts. Indicate depth and diameter of blockouts as well as plan location.

L. All construction joints including each lift of column pours. See ***SDG*** Chapter 3 for details.

M. Estimated quantities, including mass concrete, admixture requirements, etc. consistent with the requirements stated in the General Notes. May be included on the pier plan and elevation sheet or detail sheet.

13.3 PIER DRAWINGS AND DETAILS - PLAN VIEW

In addition to the items in Section 13.2, include the following in the plan view of Pier sheets:

A. Dimensions along centerline of pier tied to the Station Line. Dimensions should be comprehensive to allow for complete layout of the pier.

B. Beam/girder centerlines. Indicate beam/girder number on each centerline. Indicate the acute angle between the beam/girder centerline and the centerline of bearing for each beam/girder or show as "Typical". Dimension beam/girder spacing with respect to the centerline pier. Tabulate if necessary.

C. Dimensions along centerline of pier tied to the Station Line. Dimensions should be comprehensive to allow for complete layout of the pier.

D. Skew angle between Station Line and centerline pier. See ***SDM*** Chapter 2 for skew definitions.

E. Direction of Stationing.

13.4 PIER DRAWINGS AND DETAILS - ELEVATION

In addition to the items in Section 13.2, include the following in the elevation view of Pier sheets:

A. Elevations at all locations critical to layout including:
   1. Pedestal/beam seat elevations.
   2. Top and bottom of pier cap at corners, ends and slope break point.
   3. Top and bottom of pier column.
   4. Finished ground.
   5. Top of footing

   Elevations may be tabulated if necessary for clarity.

B. Dashed outline of existing piers or other adjacent structures and approximate dimensions. For widenings, provide approximate dimensions and/or tie-ins between proposed and existing footings and pier caps. If the proposed bridge is built near an existing-to-remain structure, show the dashed outline of the structure and determine if dimensions are pertinent.

C. Identify a working point when required (i.e. superelevation conditions).

13.5 PIER DRAWINGS AND DETAILS - FOOTINGS (Rev. 01/11)

Include a separate detail for pier footings. For examples illustrating the content and format of completed Pier Footing Details sheets, see the ***Structures Detailing Manual Examples***. Generally this is a separate sheet but can be included on the pier details sheet if space permits. At a minimum, include the following footing details:

A. Footing dimensions.

B. Centerline of footing in both directions.

C. Footing reinforcement.

D. Pile or shaft locations in the footing. Dimension pile or shaft spacing with respect to the centerline of the footing. Distinguish between centerline of column and centerline of pier.

E. Outline of column(s). Show as dashed.

F. Detail of tension pile connection to footings. Include tension pile connection rebar in reinforcing bar list for the footing. See Figure 13.5-1, Figure 13.5-2 and Figure 13.5-3.

G. Footing depths below the finish grade. Footing depths shall be a minimum of three feet to top of footing, including footings buried in sloped fill. See Figure 13.5-4.

Figure 13.5-1 Tension Pile Details (1 of 3)

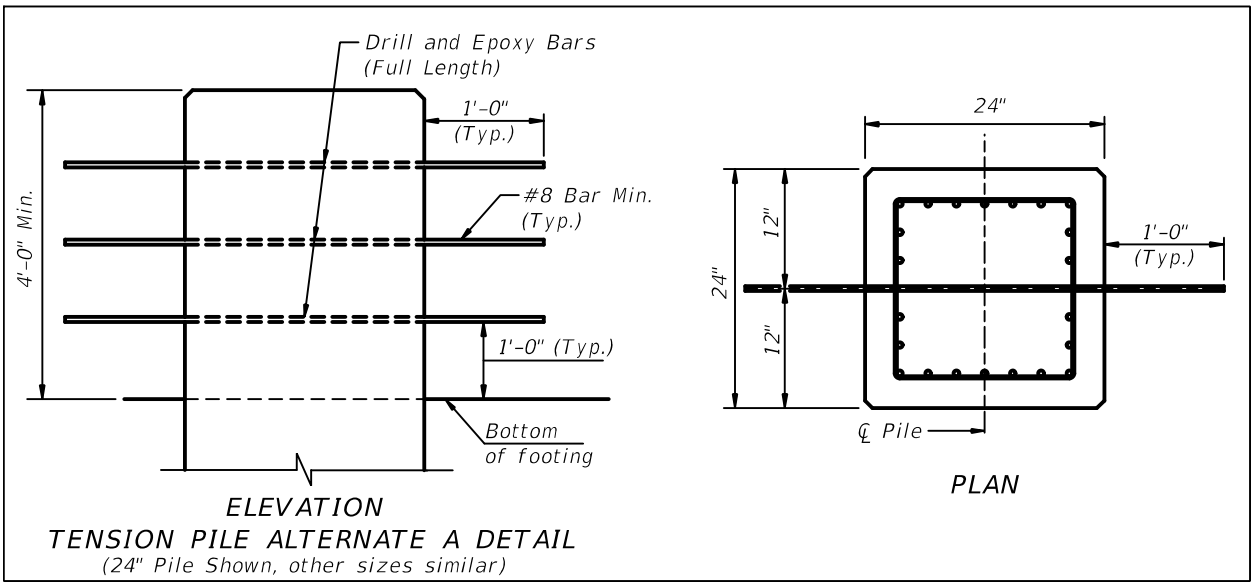

Figure 13.5-2 Tension Pile Details (2 of 3)

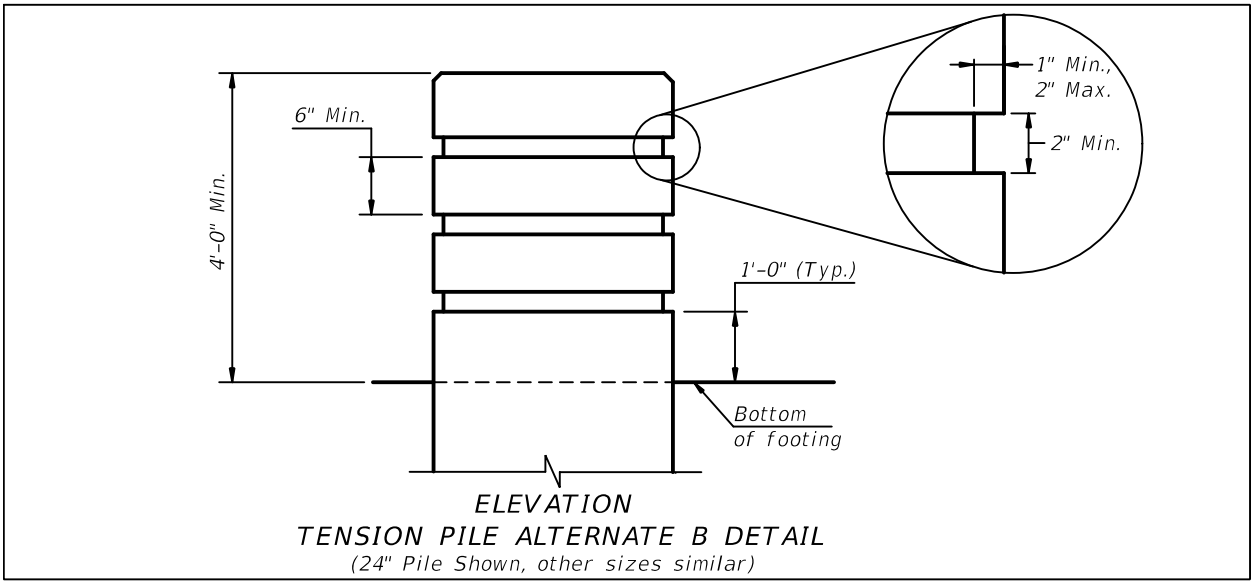

Figure 13.5-3 Tension Pile Details (3 of 3)

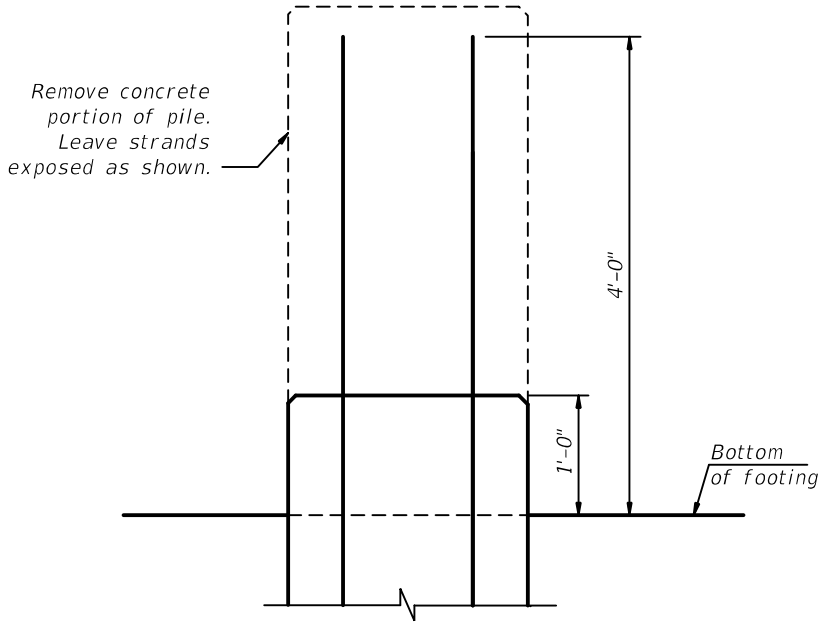

ELEVATION
TENSION PILE ALTERNATE C DETAIL
(24" Pile Shown, other sizes similar)

Figure 13.5-4 Minimum Footing Depth on Sloped Fill

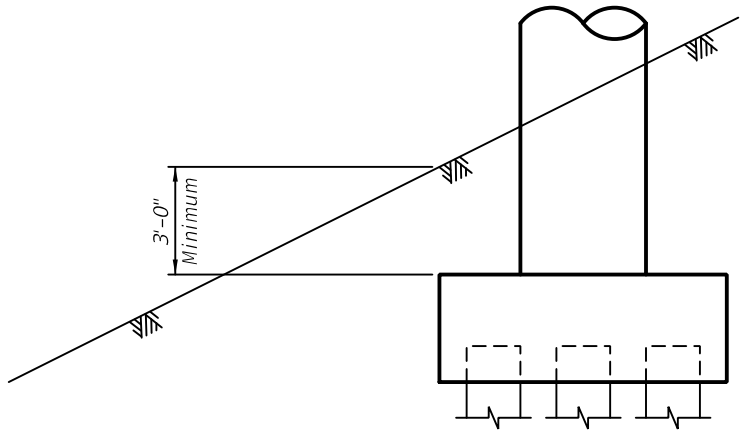

MINIMUM FOOTING DEPTH ON SLOPED FILL

13.6 PIER DRAWINGS AND DETAILS - REINFORCING DETAILS

Consider the following preferred reinforcing details when detailing piers:

A. Avoid column cross-ties with 180-degree hooks at each end. The preferred method is to provide a 90-degree hook at one end to allow the tie to be rotated into position. Do not use this detail when plastic hinging due to ship impact is anticipated. See Figure 13.6-1.

Figure 13.6-1 Preferred Column Tie Detail

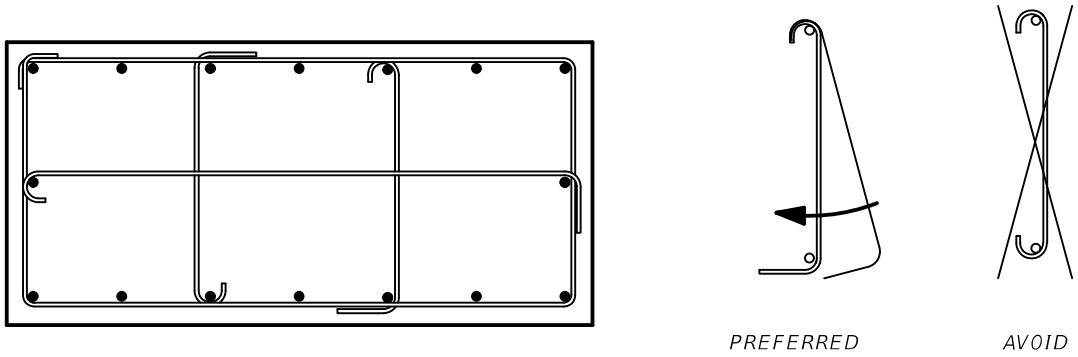

PREFERRED COLUMN TIE DETAIL

B. When detailing variable-width pier columns, consider extending the typical pier column cage through the flared section, detailing the flare with "U" bars. Horizontal "U" bars may be detailed with a constant mark by varying lap dimensions. See Figure 13.6-2.

C. Unless plastic hinging is anticipated, standard hoops may be used on circular columns provided that the ties are rotated so the lap splice location varies throughout the length of the column. See Figure 13.6-3.

Figure 13.6-2 Variable-Width Pier Reinforcing Details

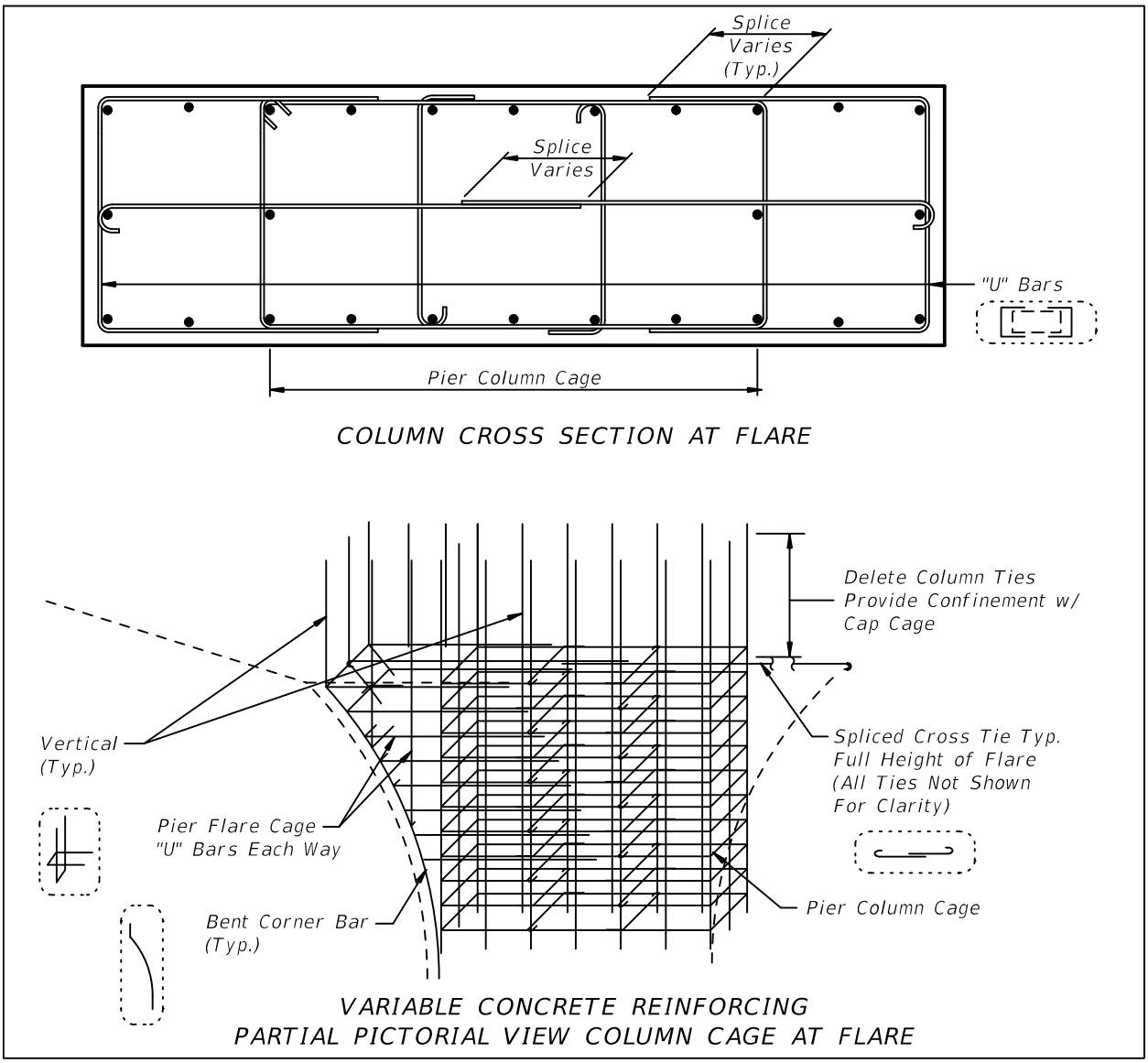

Figure 13.6-3 Circular Column Cross Section

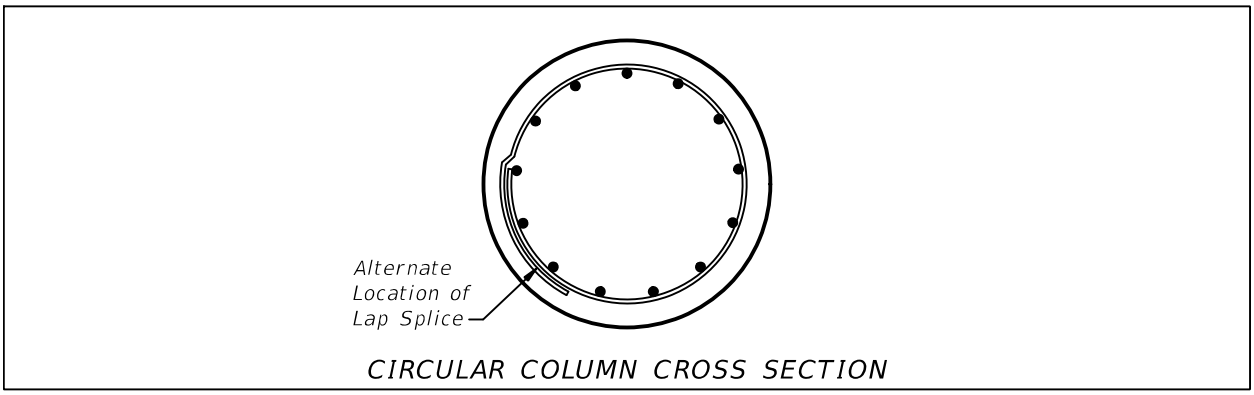

13.7 PIER DESIGN CONSIDERATIONS - GENERAL (Rev. 01/11)

Piers should be designed with the following considerations being taken into account:

A. Detail steel to avoid conflicts between reinforcement in the cap and the column, the footing and the column, and the footing, shafts and piles. Ensure that pedestal steel does not conflict with top reinforcement in pier cap.

B. For concrete pours such as pier caps and footings that will be greater than 5 feet tall, provide a minimum 10-inch space in the main reinforcement to allow the concrete discharge chute to fit through. See Figure 13.7-1. See ***Specifications*** Section 400 for concrete discharge height limitations.

C. Main cap steel should be fully developed at cap ends in regions with large negative moments. Use "L" bars in lieu of "J" hooks in the top layer of reinforcing steel. If necessary, increase the pedestal setback dimension from edge of cap. See Figure 13.7-1.

Figure 13.7-1 Cap Steel Details

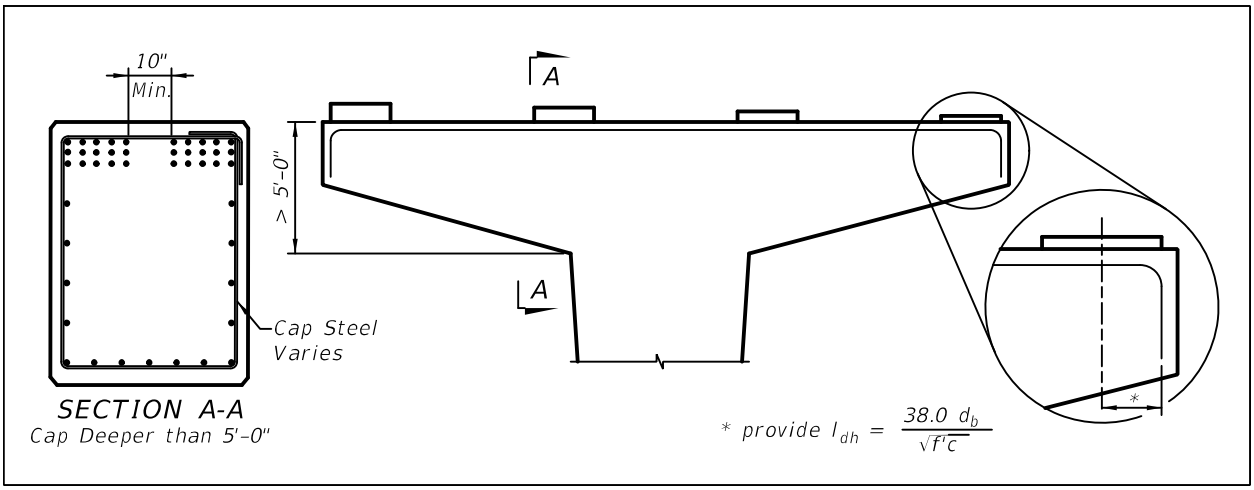

D. Fully develop column steel into pier cap and into footing. Do not include steel used in architectural details such as fillets in strength calculations.

E. Footings should be dimensioned to accommodate driving tolerances for piles and placement tolerances for shafts. Plan elevations of top of shaft should be 3" above bottom of footing to ensure there is no gap between the footing and top of shaft if constructed within tolerance. Specify an embedment of 12" for piles that are not required to be developed.

F. Add details for location of main steel mats in footings giving consideration to pile driving tolerances and drilled shaft placement tolerances. Avoid conflicts between footing reinforcement and shaft reinforcement.

G. Detail drilled shaft reinforcement to ensure that it can be fully developed taking reinforcement cage placement tolerances into account. Whether a cap or a single column is placed on top of the shaft(s), design for the worst-case placement of the shaft reinforcement.

Figure 13.7-2 Drilled Shaft Reinforcing Details

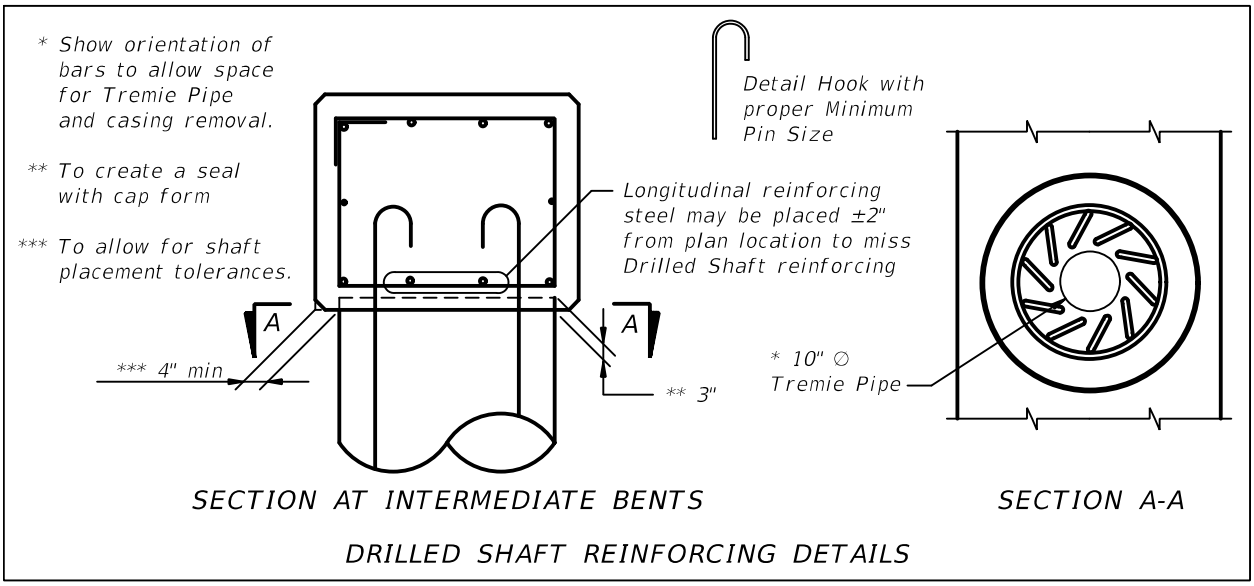

H. Detail pier column to be stepped-in from face of pier cap by 3" on each face. This will allow column reinforcement to be inside of the pier cap reinforcement cage and will facilitate tying cap steel on the ground and lifting into the form. See Figure 13.7-3.

Figure 13.7-3 Pier Cap Reinforcing Details

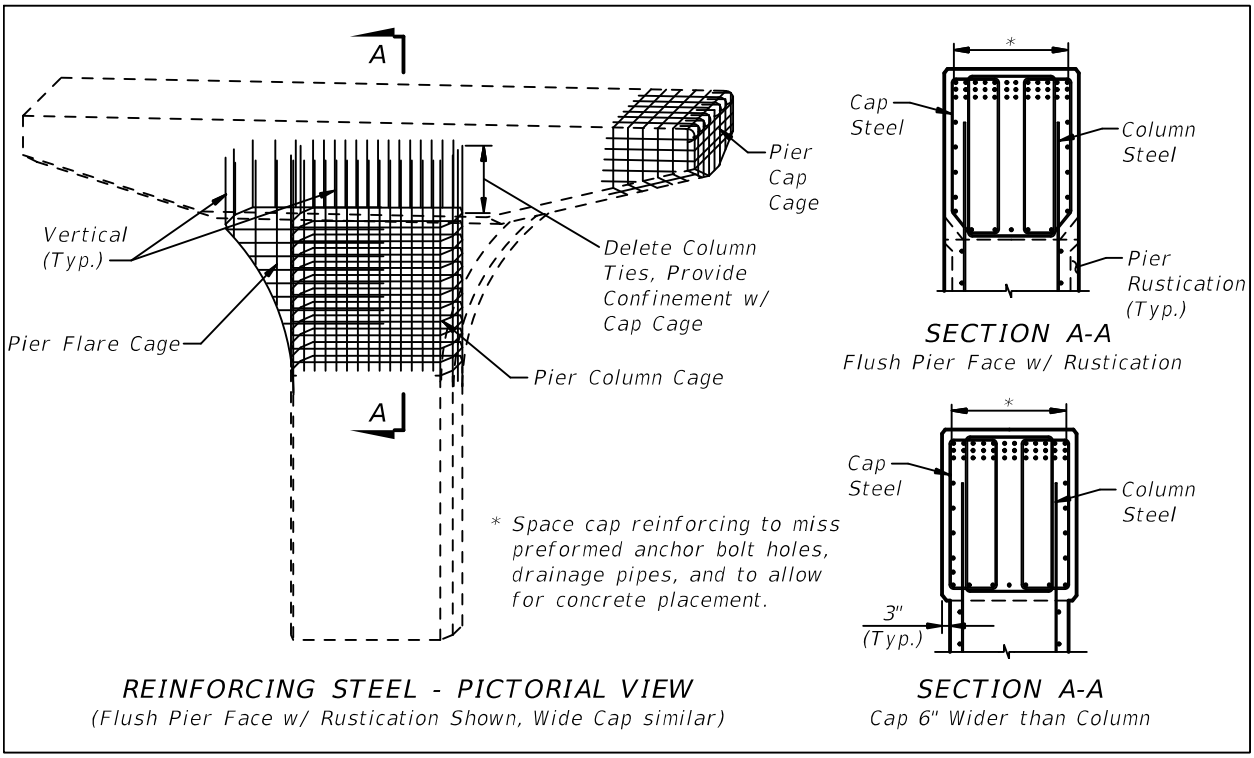

I. Consider reducing column reinforcement in tall columns where allowed by the design.

J. For multi-pier bridges, only piers adjacent to roadway underneath may need to be skewed to meet horizontal clearance requirements. Consider making remaining piers normal to the bridge.

K. Verify that the dimensions of the pedestals are compatible with the bearing pad selection and skew. Place bearing pads orthogonal to the centerline of the beam wherever possible except where specifically shown to be skewed on the ***Design Standards***.

L. For caps with multiple layers of steel, place reinforcement with minimal distance between layers to maximize distance from neutral axis. Generally, 1½" clear distance between layers of reinforcement is preferred.

M. Standardize sizes and pile grid/shaft layout on pier footings throughout as much of the project as possible.

N. Design pier and column reinforcement so that it can be tied prior to erection, and not required to be tied in the air.

O. Preformed anchor bolt blockouts should be 4-inch diameter minimum. Completely detail blockouts and verify there are no conflicts with reinforcement. Use either a corrugated galvanized metal form that is to be left in place or a smooth removable form. See Figure 13.7-4, Figure 13.7-5 and Figure 13.7-6 for anchor bolt alternatives for both composite neoprene bearings and pot bearings.

Figure 13.7-4 Anchor Bolt Details for Composite Neoprene Bearings

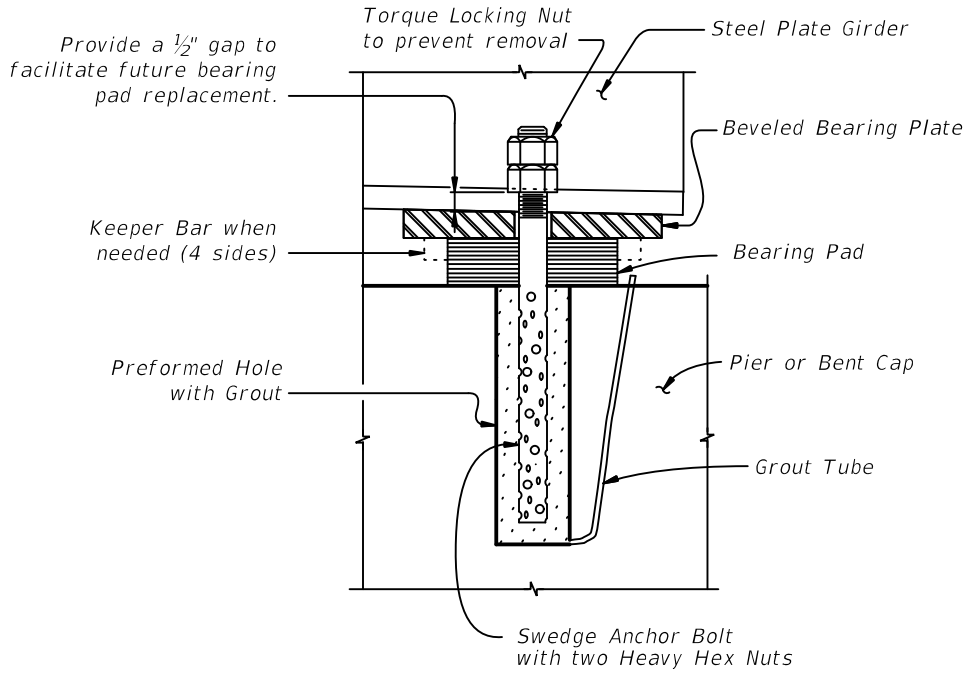

ANCHOR BOLT DETAIL FOR COMPOSITE NEOPRENE BEARINGS

Figure 13.7-5 Anchor Bolt Detail for Pot Bearings - Alternative A

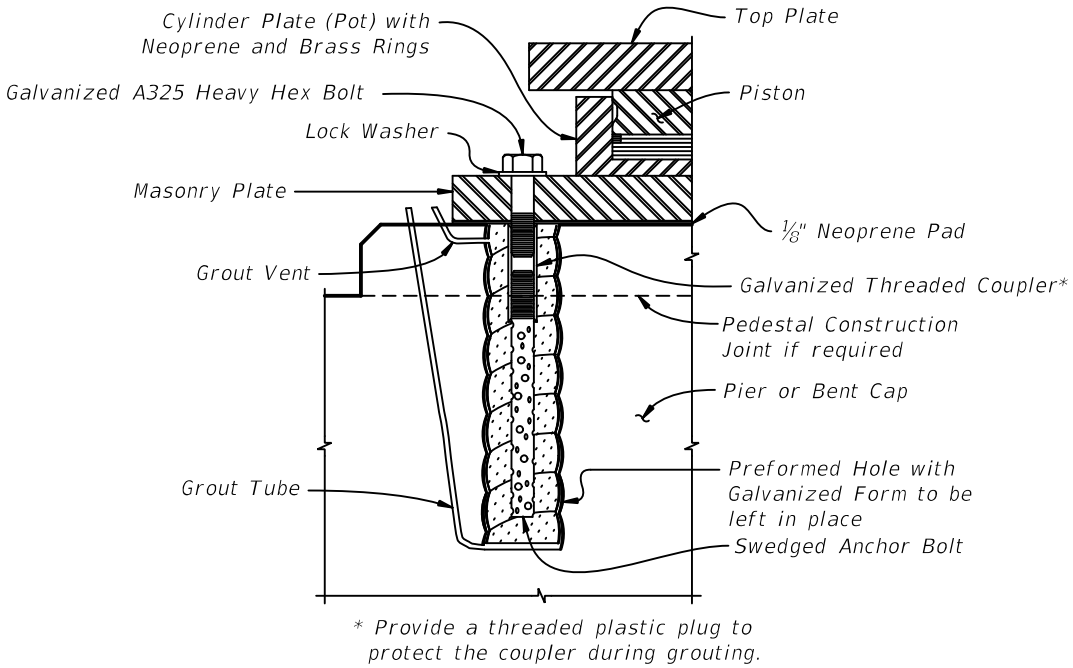

ANCHOR BOLT DETAIL FOR POT BEARINGS - ALTERNATIVE A

Figure 13.7-6 Anchor Bolt Detail for Pot Bearings - Alternative B

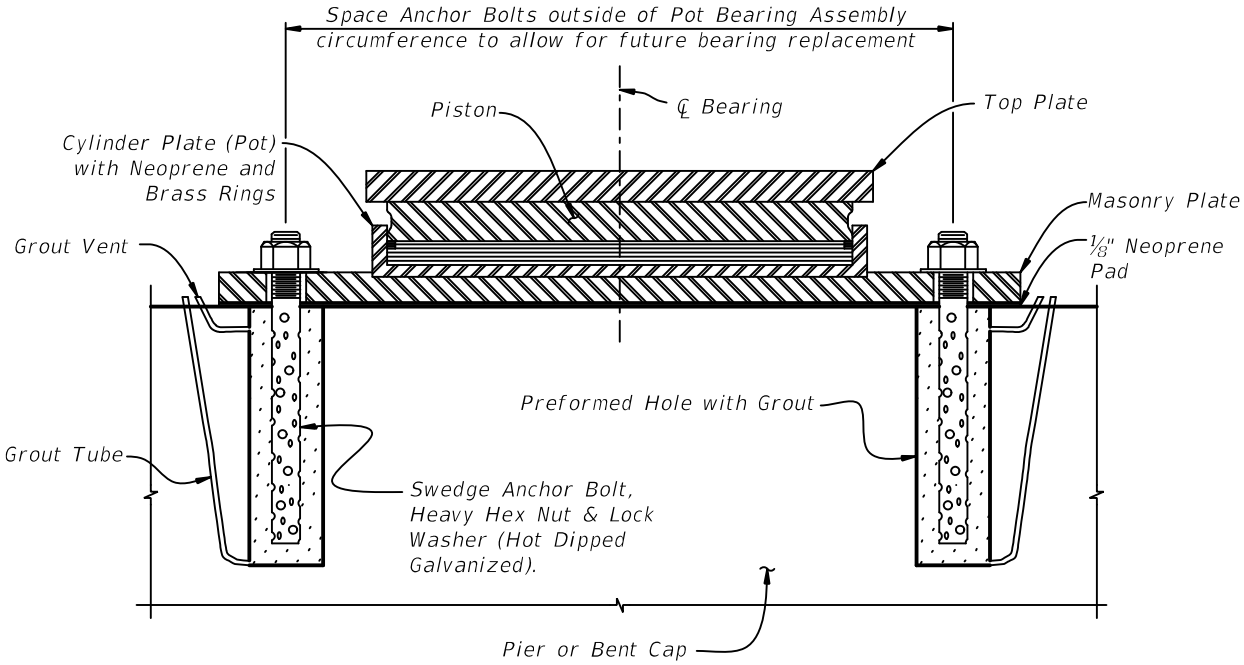

ANCHOR BOLT DETAIL FOR POT BEARINGS - ALTERNATIVE B

13.8 PIER DESIGN CONSIDERATIONS - PIER AESTHETICS (Rev. 01/11)

Aesthetics should balance efficiency, economy and elegance. For an in depth discussion of bridge aesthetics, refer to the ***AASHTO Bridge Aesthetics Sourcebook, November 2010***. The following issues and suggestions can be incorporated into any project's aesthetic plans to help achieve these goals:

A. When determining pier shape and proportions, look at the tallest and shortest structures as well as minimum and maximum cross slopes. Use uniform dimensions that will result in acceptable aesthetics at all locations. This applies to multi-pier bridges as well as multi-bridge projects.

B. The use of cheekwalls on pier caps is encouraged at locations where two dissimilar beam types are to be used on adjacent spans. A curved bridge supported by straight beams is another location where pier cap cheekwalls can economically enhance a bridge's aesthetics. Cheekwalls on skewed bridges should be parallel to the skew, not normal to the pier cap. The inside face of pier cap cheek walls should be poured close to the exterior beam to prevent shadowing. Provide sufficient clearance between the cheekwall and the exterior beam to allow for jacking of the span and bearing replacement. See Figure 13.8-1.

Figure 13.8-1 Pier Cap Cheekwall Details

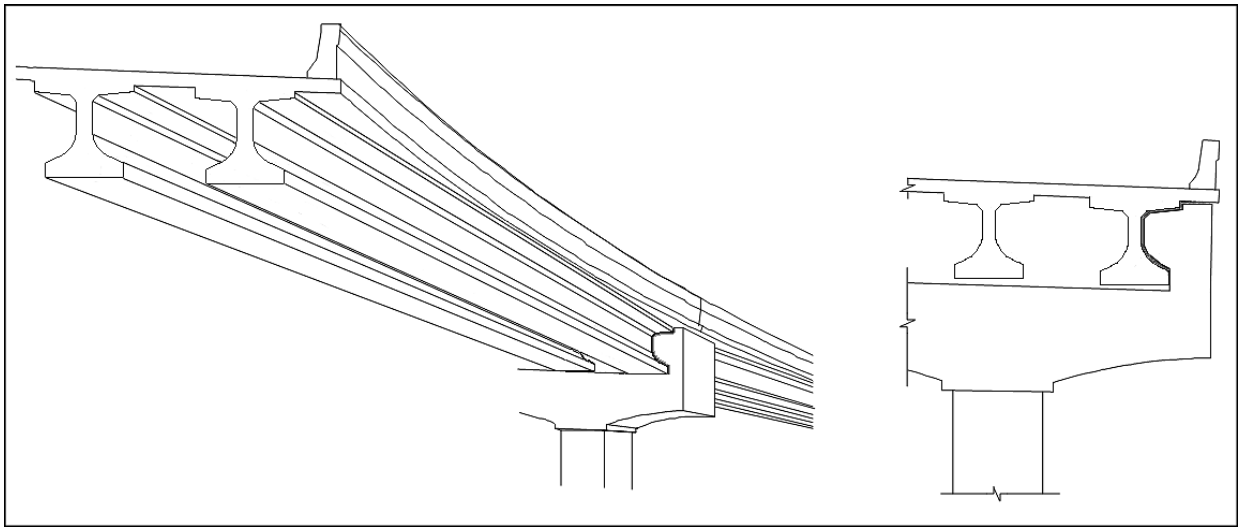

C. For multi-bridge projects, develop a family of pier shapes at the earliest stages of the project. Choose pier shapes that both meet the structural requirements of the bridges within a project while also providing pleasing shapes at all locations. Consider multi-column piers, hammerheads, straddle piers, C-piers or any other special pier type as the project requires. See Figure 13.8-2 and Figure 13.8-3.

Figure 13.8-2 Example Pier Shapes

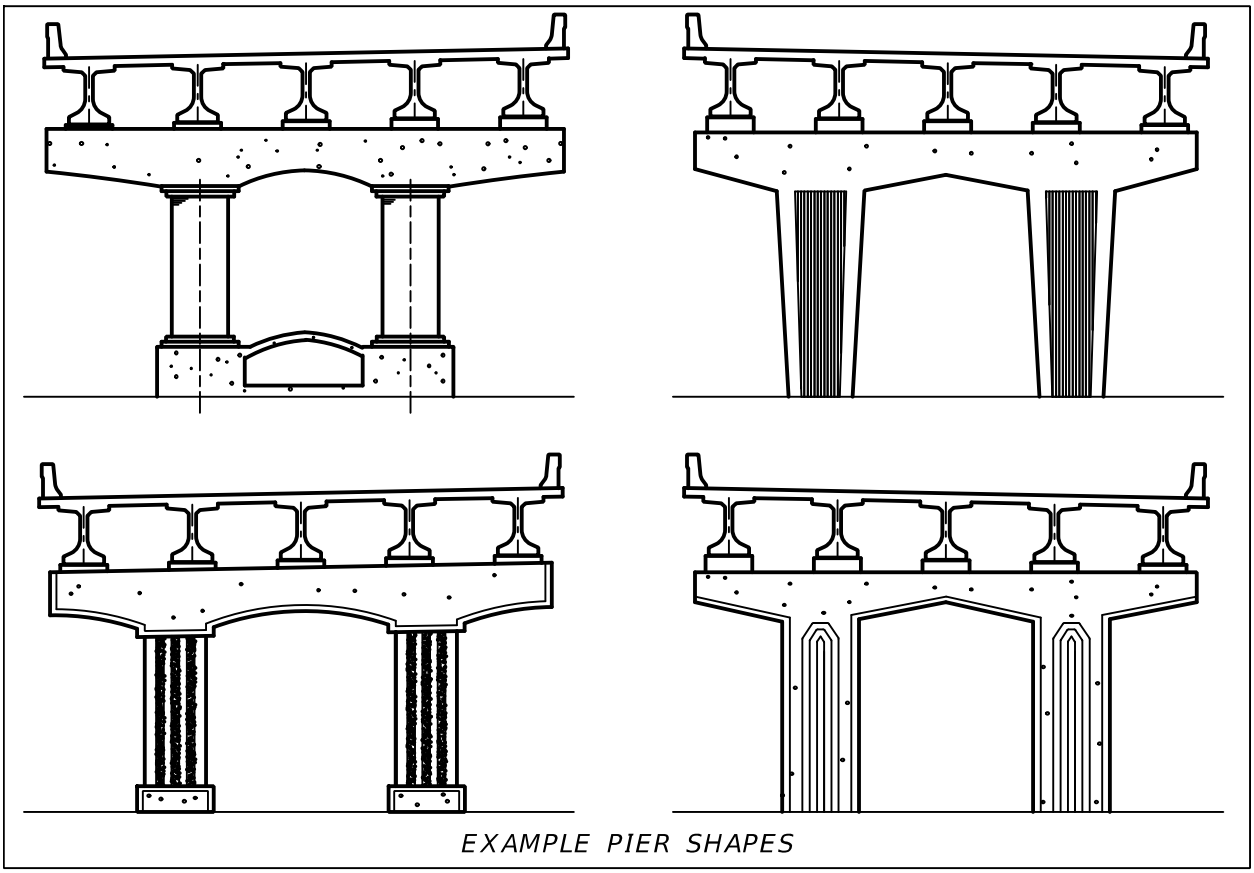

Figure 13.8-3 Pier Families

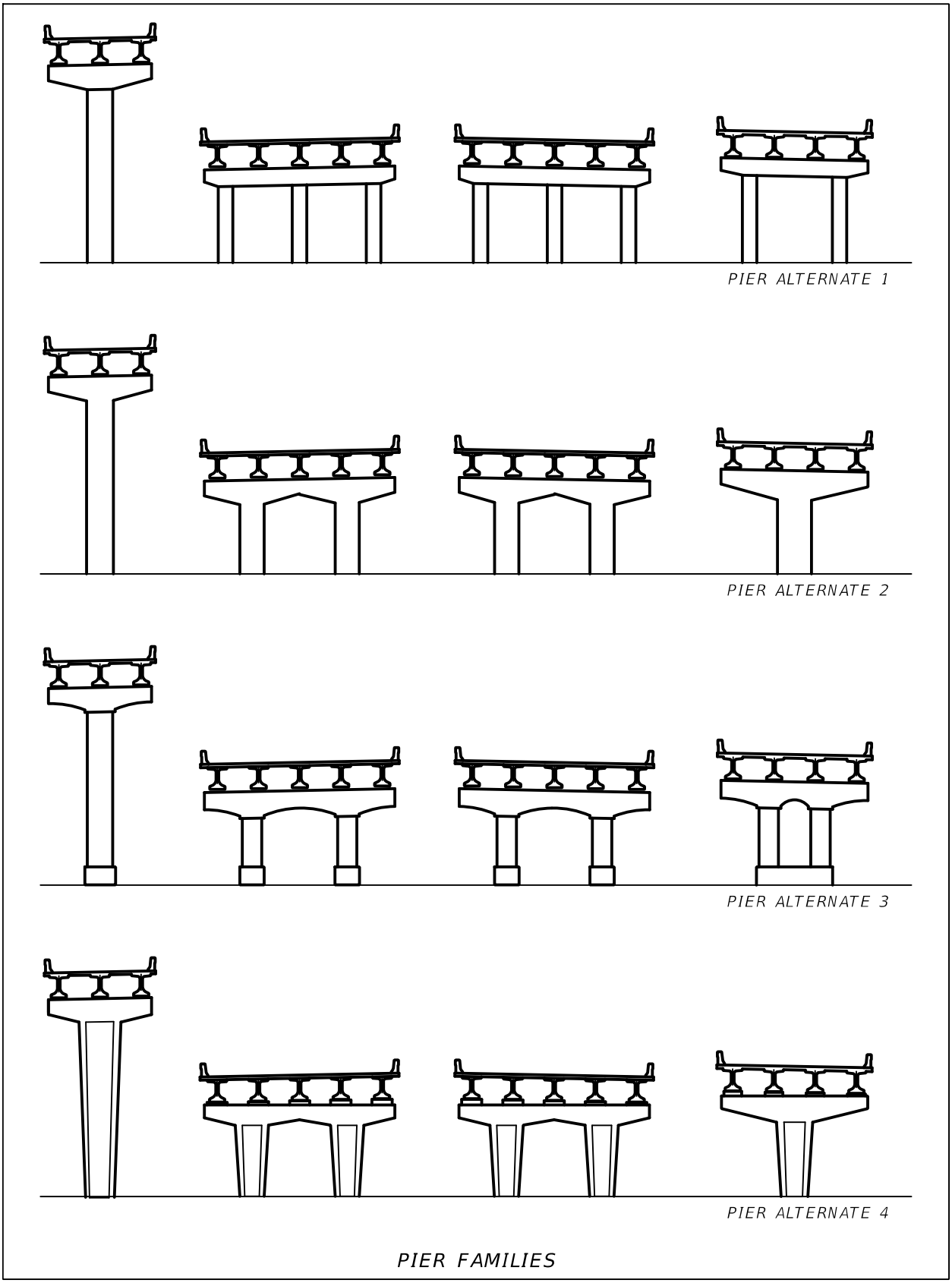

D. For piers that utilize a cap form that will be rotated to accommodate variable cross slopes, pier rustication or striation details should stop short of the pier cap in the column. This will avoid misalignment of the form liner as the pier cap rotates about the working point to make up the superelevation. See Figures 13.8-4 and Figure 13.9-1. This will also allow column steel to extend inside cap cage while maintaining concrete cover per 13.7.J above.

Figure 13.8-4 Rustication Detail At Working Point Of Rotated Pier Cap

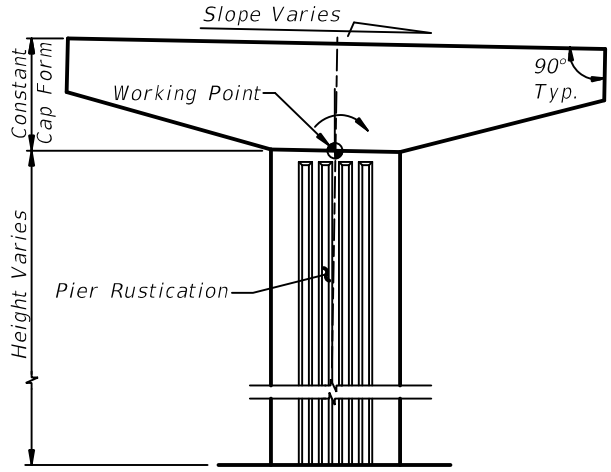

ELEVATION VIEW - HAMMERHEAD PIER
Rustication Stops Below Working Point

E. For piers with constant cross slope sections, piers that utilize flush columns and caps, or piers that utilize split cap forms flush with the column, the rustication detail may extend into the cap. Detail the pier cap so that the same form can be re-used for maximum efficiency. See Figure 13.8-5, Figure 13.9-2, Figure 13.9-3 and Figure 13.9-4.

F. Larger chamfers can help reduce the apparent size of large, bulky concrete elements. See Figure 13.8-5.

Figure 13.8-5 Example Pier Shapes for Straight Bridges or Constant Cross Slopes

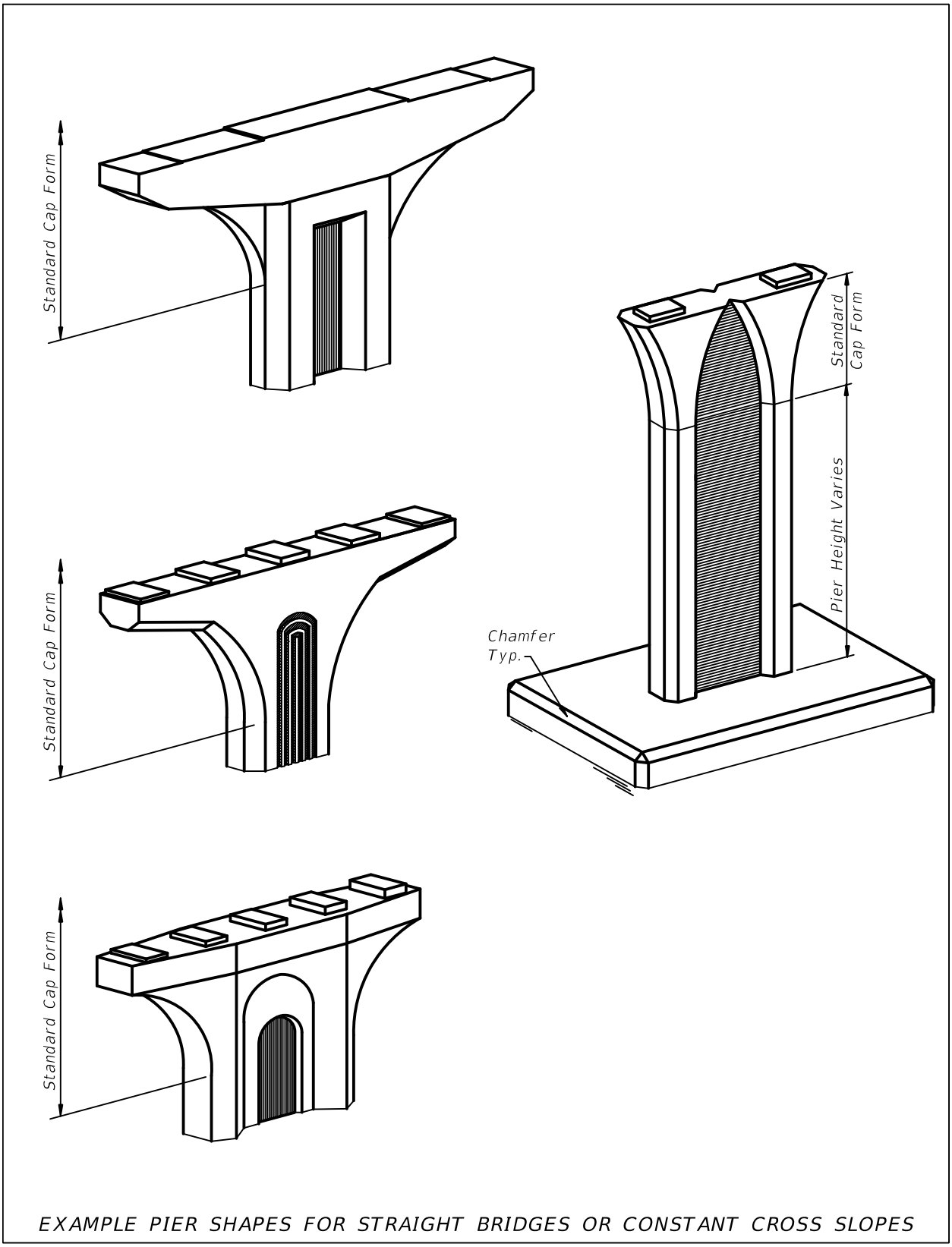

13.9 PIER DESIGN CONSIDERATIONS - HAMMERHEAD PIERS

In addition to the applicable sections above, the following issues should be addressed when designing and detailing hammerhead piers:

A. It is preferable to rotate pier cap about a working point or utilize split forms to facilitate varying cross slopes. Acceptable methods are shown in Figure 13.9-1 through Figure 13.9-4. Utilize standard form shapes where practical to minimize formwork and standardize the reinforcement cage.

Figure 13.9-1 Pier Cap Details (1 of 4)

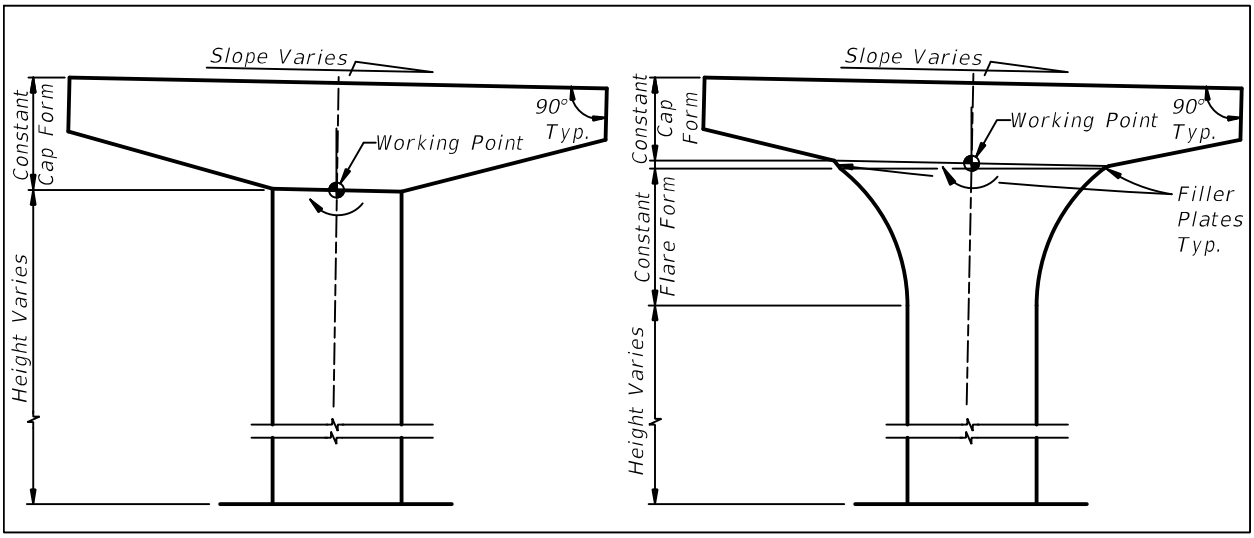

Figure 13.9-2 Pier Cap Details (2 of 4)

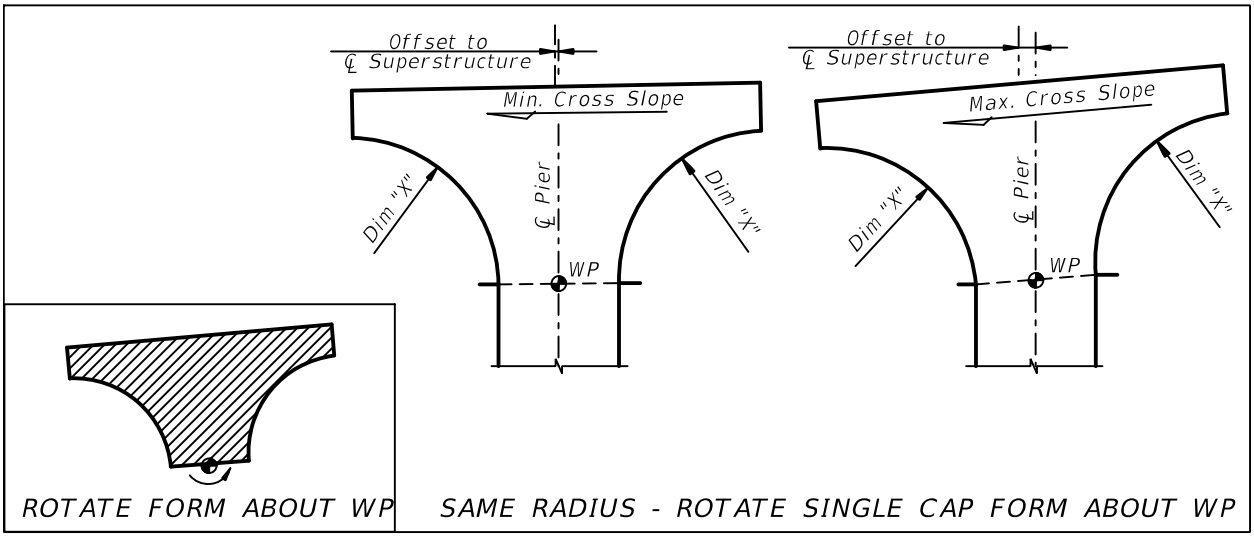

Figure 13.9-3 Pier Cap Details (3 of 4)

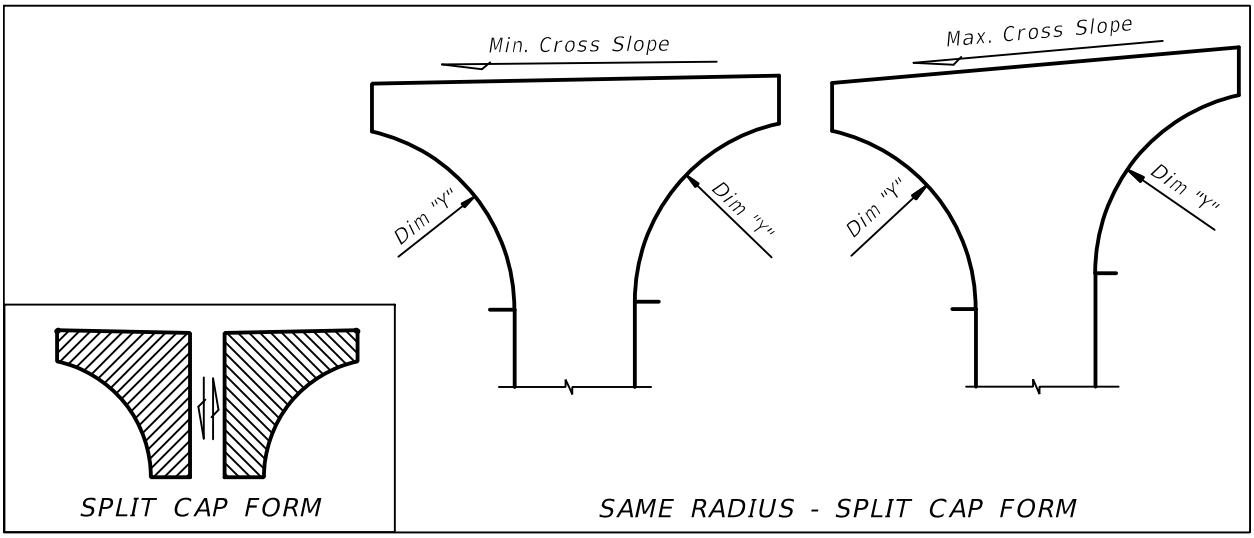

Figure 13.9-4 Pier Cap Details (4 of 4)

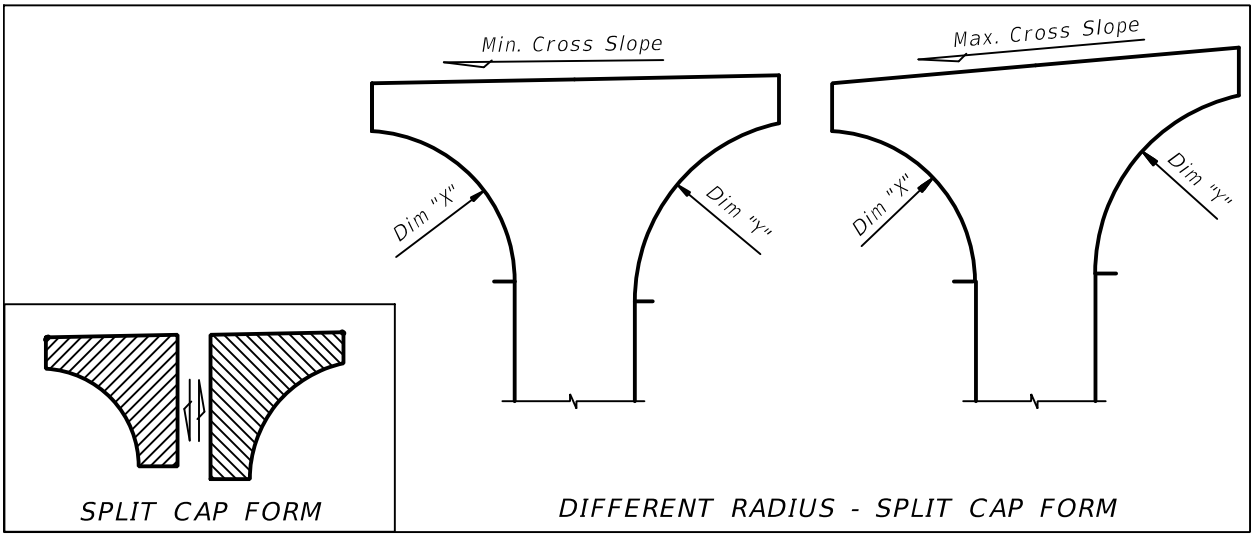

B. To avoid pier caps encroaching on the clear zone, consider using multiple staggered single column piers in lieu of an integral cap. See Figure 13.9-5.

Figure 13.9-5 Staggered Column Alternate

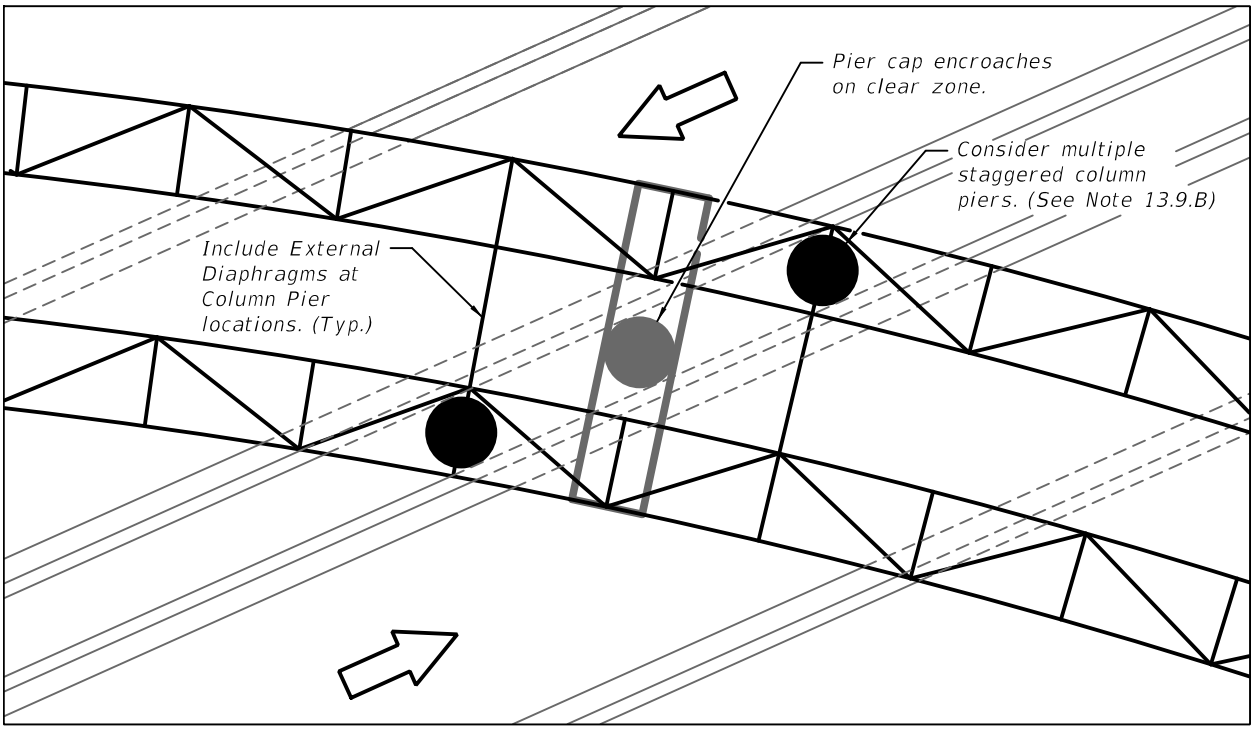

13.10 PIER DESIGN CONSIDERATIONS - INTEGRAL PIERS (Rev. 01/11)

Integral piers present significant design and detailing challenges. Figure 13.10-1 through Figure 13.10-3 show general details that are commonly found in integral piers.
In addition to the applicable sections above, the following issues should be addressed when designing and detailing integral piers with structural steel caps and/or columns (See Figure 13.10-1and Figure 13.10-2):

A. Show shear stud spacing and size for steel beams connected to the integral pier cap.

B. Show temporary supports.

C. Specify Grade HPS 70W steel in all integral pier caps for added toughness.

D. Completely detail openings required for drain pipes and utilities which are intended to pass through the integral cap.

E. For steel integral caps, show splice plates and bolt spacing and layout. Indicate bolt size and type.

F. Indicate weld type and size. Reference welding symbols at www.aws.org.

G. Designate all Fracture Critical Members (FCM). FCMs may be indicated in tabular format if needed.

H. For steel integral piers include a plan note requiring shop assembly where fit-up could be an issue.

I. Include materials and details for concrete consolidation, including admixtures, to avoid honeycombing. Consider bleed holes and vent tubes to allow air to escape and concrete to consolidate.

Figure 13.10-1 Steel Integral Pier Cap Details

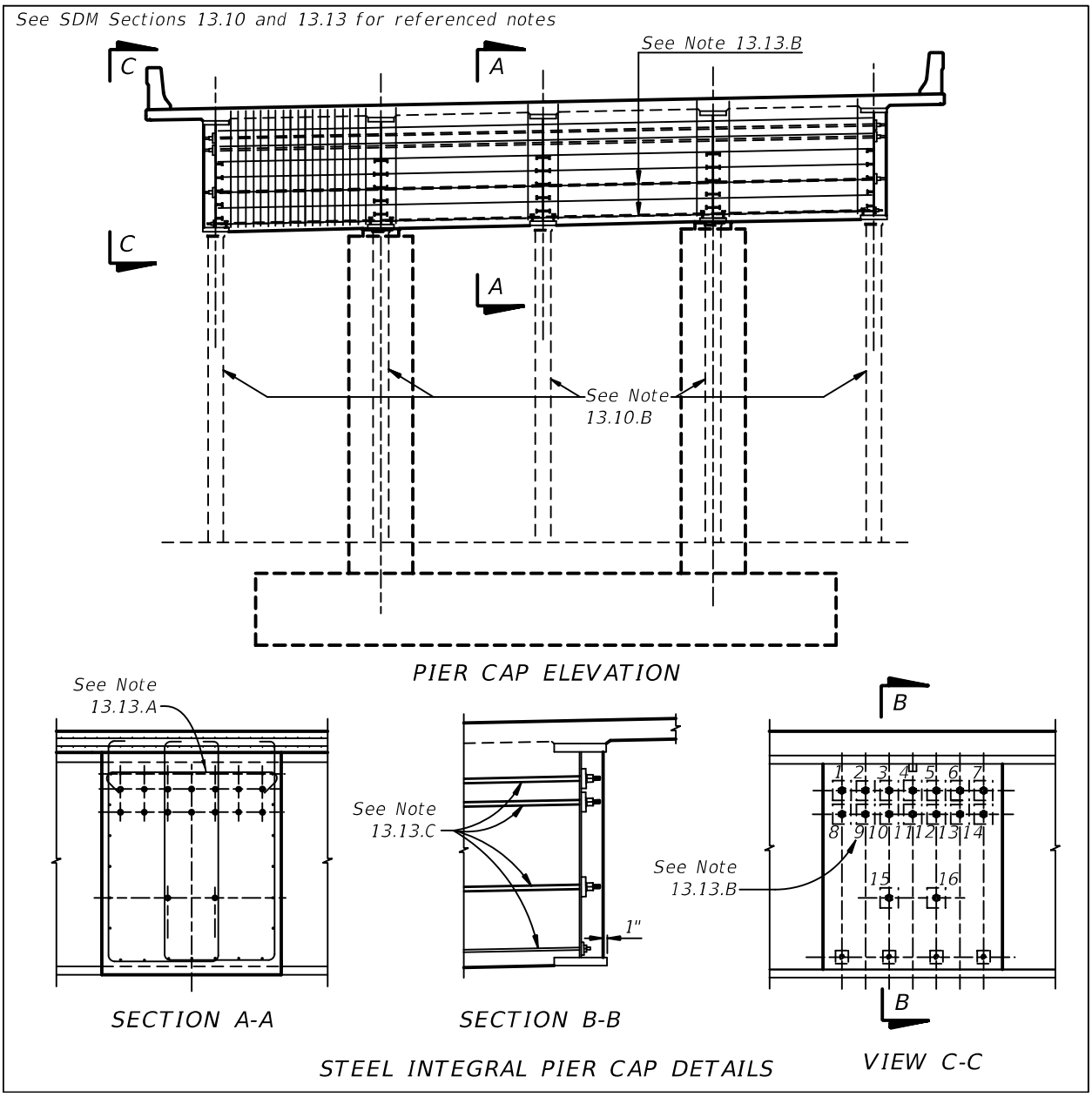

Figure 13.10-2 Integral Pier Cap Steel Girder Details

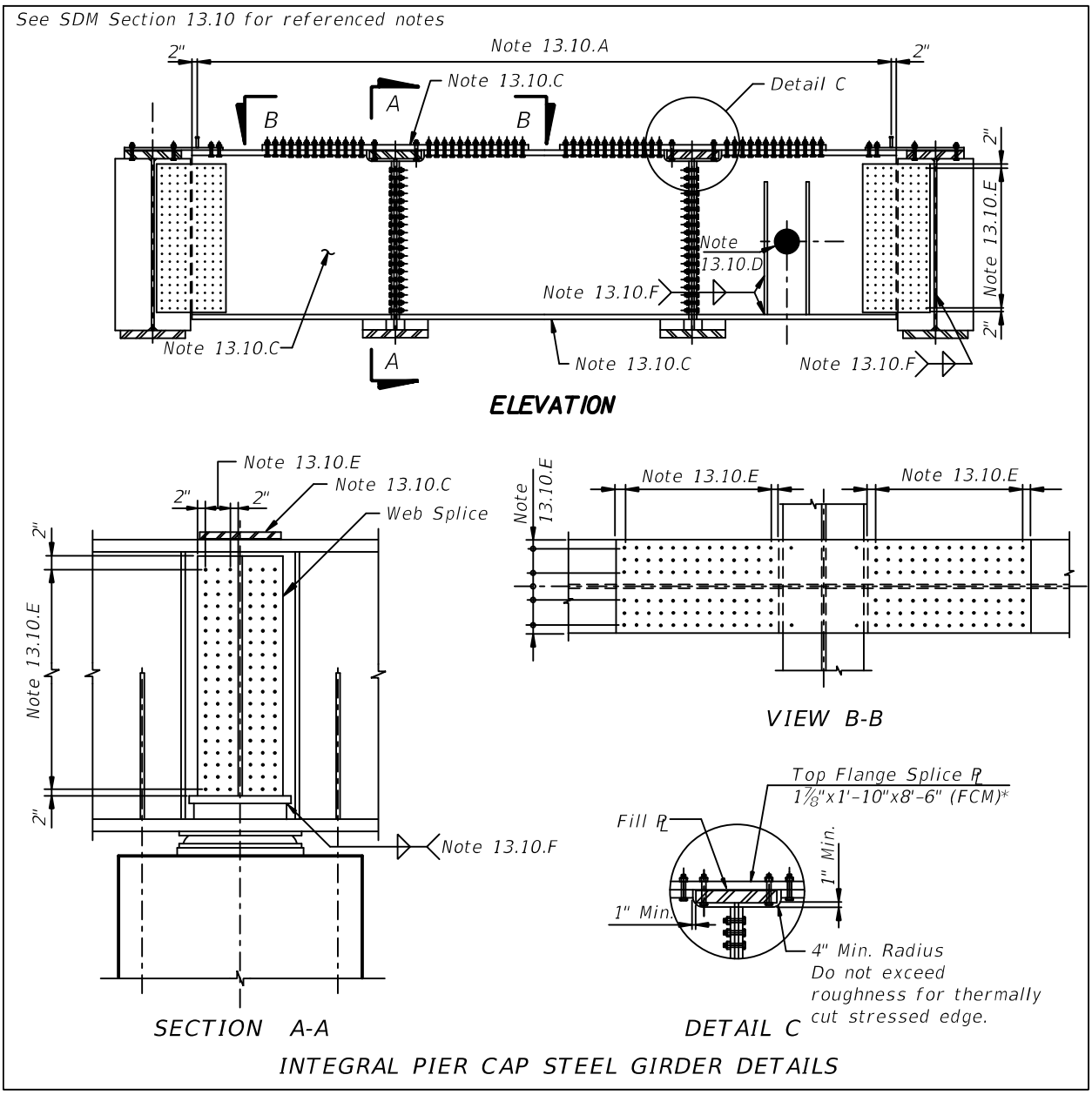

In addition to the applicable sections above, the following issues should be addressed when designing and detailing integral piers with concrete caps and/or columns (See Figure 13.10-3):

J. Generally, design concrete integral pier caps utilizing post tensioning to maximize the efficiency of the design.

K. Show temporary supports.

L. See ***SDM*** 13.13 for Post-Tensioning requirements.

Figure 13.10-3 Concrete Integral Pier Cap Details

See SDM Sections 13.10 and 13.13 for referenced notes

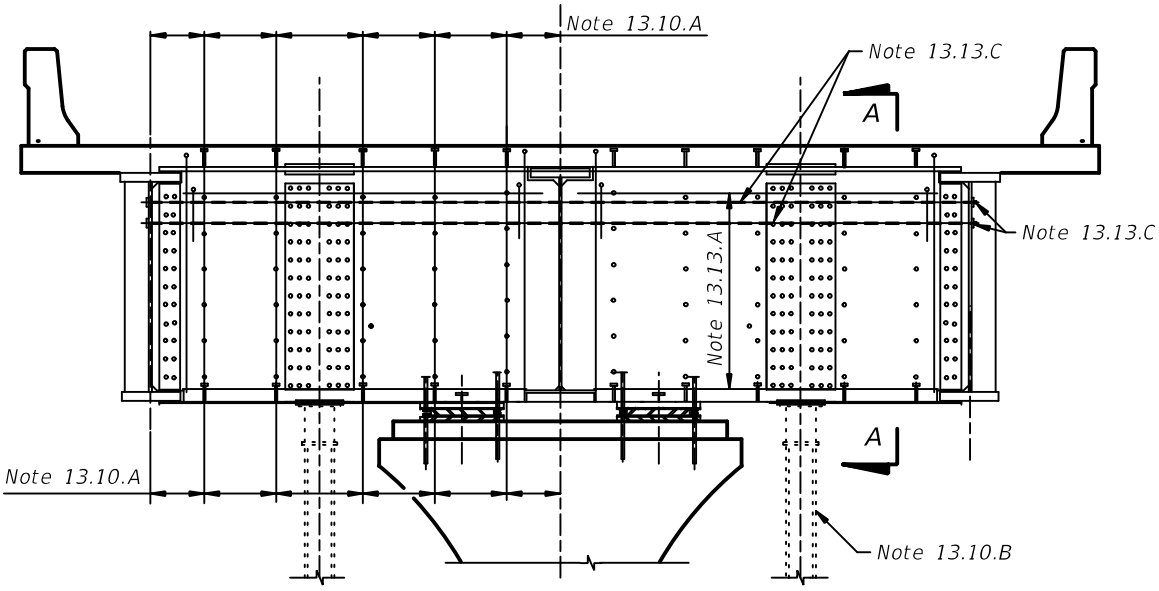

SECTION AT INTEGRAL PIER CAP

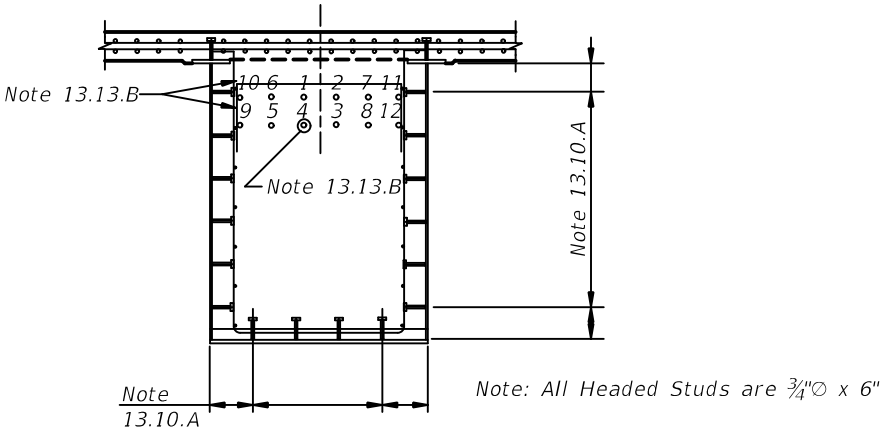

Note: All Headed Studs are ¾"∅ x 6"

SECTION A-A

CONCRETE INTEGRAL PIER CAP DETAILS

13.11 PIER DESIGN CONSIDERATIONS - STRADDLE PIERS (Rev. 01/11)

In addition to the applicable sections above, the following issues should be addressed when designing and detailing straddle piers:

A. When sizing a straddle pier, take into consideration the likelihood that the roadway underneath will be widened in the future. Depending on this possibility, the straddle pier should be sized to accommodate the ultimate condition.

B. Concrete is the preferred material for straddle piers. However, if a steel pier cap is to be used, follow these guidelines:

   1. Do not place stiffeners on outside of cap.
   2. Specify Grade HPS 70W steel for straddle pier caps for added toughness.
   3. Be aware of additional considerations required for continuous beam designs due to straddle pier cap deflections.
   4. Avoid Fracture Critical Members (FCM) where possible. When unavoidable, designate all FCMs in the plans. Tabular format is acceptable.
   5. Indicate weld type and size. Reference welding symbols at www.aws.org.
   6. Inspection access must be considered during design.

C. For rigidly framed concrete straddle piers:

   1. Account for the soil stiffness when analyzing the framed structure or provide a tension tie between the column footings.
   2. Develop the longitudinal cap steel to the longitudinal column steel at the corners of the frame (column/cap interface).

13.12 PIER DESIGN CONSIDERATIONS - C-PIERS (Rev. 01/11)

In addition to the applicable sections above, the following issues should be addressed when designing and detailing C-piers:

A. Reasonable effort should be made to avoid tension in piles.

B. It is desirable to center the footing on the centroid of the deadload of the pier plus superstructure. This will help avoid piles in tension.

C. Account for soil stiffness when analyzing the C-Pier framed structure and effects on superstructure torsion.

D. Develop the longitudinal cap steel to the longitudinal column steel at the intersection of the C-Pier frame (column/cap interface).

13.13 PIER DESIGN CONSIDERATIONS - POST-TENSIONING (Rev. 01/11)

When designing and detailing post-tensioning in piers, be aware of the following design considerations:

A. See the FDOT Approved Post-Tensioning Systems website for post-tensioning systems approved for statewide use. Designers and detailers should use the dimensions shown on the approved drawings to ensure adequate room is provided in post-tensioned members for post-tensioning hardware, reinforcement, minimum cover requirements, etc.

B. Detail reinforcement to ensure there are no conflicts with post-tensioning ducts and anchorages. Also check for conflicts with anchor bolt blockouts.

C. Clearly number post-tensioning ducts/bars for post tension stressing sequence.

D. Label PT bar size, PT nut and jacking (bearing) plate.

E. Include a detailed stressing sequence for PT tendons. Indicate what stage of construction each tendon will be stressed and to what level. Indicate minimum concrete strengths for concrete cap and deck before stressing operations can begin.

F. Address the placement of PT bars through the pier column. Ensure that there are no conflicts between anchorages or ducts with the reinforcement cage in the pier cap, footing or the column.

G. Create a simple P/T duct layout using x,y coordinates. Give vertical dimensions to the center of the duct. See Figure 13.13-1.

Figure 13.13-1 P/T Duct Layout Using X,Y Coordinates

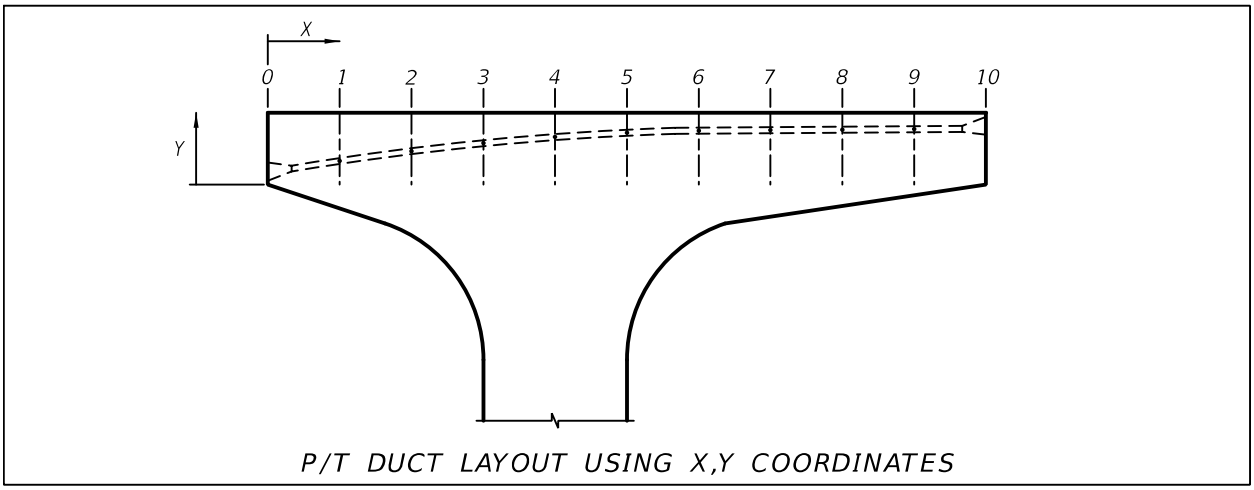

H. Reference appropriate Design Standards for additional requirements regarding post tensioning layouts and details.

I. Address duct spacing and anchorage edge distances. Fit up issues should be fully worked out during the design phase.

J. Consider PT fit up issues, potential out-of-tolerance excessive beam lengths and higher concrete strength requirements when sizing inverted-T caps. Reducing the size of the cap for the purpose of reducing material costs could actually result in a more expensive design based on these issues.

14 FINISH GRADE ELEVATIONS

14.1 GENERAL

A. This drawing is a typical section and schematic plan view of the superstructure that shows finish grade elevations.

B. For spans of equal length, only one schematic plan view need be shown.

C. Create equally-spaced transverse lines (T-lines) to show elevations. Turn skewed T-lines perpendicular to bridge coping at the gutterline. Maintain cross slope of bridge deck under traffic railings, raised medians and pedestrian parapets.

D. For examples illustrating the content and format of completed Finish Grade Elevations sheets, see the ***Structures Detailing Manual Examples***.

14.2 ACCURACY (Rev. 01/11)

Finish grade elevations are riding surface elevations (top of slab) on the bridge.
To ensure accuracy, adhere to the following guidelines:

A. Space T-lines based on which of the following conditions governs:

1. Such that a linear interpolation midway between elevations does not deviate from the theoretical elevation by more than 0.005'.
2. No less than three equal spaces within any given span.
3. Not more than 10 feet between T-lines within any given span.

B. For skewed straight bridges, T-lines may be either parallel to the skew or perpendicular to the bridge coping. For curved bridges, make T-lines radial. For curved bridges with a skew, use a combination of skewed T-lines and radial lines as appropriate.

C. Show these elevations to three decimal places.

14.3 FINISH GRADE ELEVATIONS

Tabulate finish grade elevations in a span-by-span or unit-by-unit fashion. These tables may be included on the Schematic sheet, Typical Section sheet or on a separate sheet. Finish grade elevations should be shown at the intersections of the following locations listed in section A and section B:

A. Along the length of the bridge:

1. Begin/end of approach slabs.
2. Half way point of approach slabs.
3. Front Face of Backwall at begin/end bridge stations.
4. Centerlines of Bearings.
5. All T-Line locations.

6. Centerlines of piers or intermediate bents.
7. Along deck cut lines and/or construction joints.

B. Transversely:

1. Bridge coping.
2. Gutter line at traffic railings and traffic separators.
3. Back face of traffic railings for inboard mounted railings.
4. Inside of parapet or pedestrian railing.
5. The Station Line.
6. The PGL (if different from the Station Line). If there is more than one PGL, show elevations along each one.
7. Centerline of all beams or girders. For box beams or girders, show elevations at the centerline of each web.
8. Along deck cut lines.

14.4 FINISH GRADE ELEVATIONS-SCHEMATIC PLAN VIEW (Rev. 01/11)

At a minimum, show and label the following on the finish grade elevation plan view:

A. Begin/end approach slab.

B. Front Face of Backwall at begin/end bridge stations.

C. Centerlines of piers or intermediate bents.

D. All T-line locations. Label T-lines numerically.

E. Deck cut lines, construction joints and/or longitudinal joints.

F. Bridge copings.

G. All gutter lines, including traffic separators and pedestrian parapets.

H. The Station Line and Direction of Stationing arrow.

I. The PGL (if different from the Station Line). If there is more than one PGL, show elevations along each one.

14.5 FINISH GRADE ELEVATIONS - TYPICAL SECTION VIEW

The typical section views consist of sections through the bridge and approach slabs at locations showing all of the features which elevations will be given to. Clearly label all locations where elevations will be shown, cross slopes and working points for box girders. Use the exact labeling used in the Schematic Plan View.

15 SUPERSTRUCTURE - CONCRETE ELEMENTS

15.1 GENERAL

A. Superstructure plans will include all the details necessary to construct beams/girders, deck slabs, diaphragms, stay-in-place forms and all other related superstructure components.

B. For structures with prestressed concrete beams, include the Table of Beam Variables in the superstructure plans. The Table of Beam Variable can be found in the Structures Bar Menu.

C. Details on how prestressed beam standards are to be incorporated into bridge plans can be found in the ***Instructions for Design Standards (IDS)***.

D. For structures with steel girders, see Chapter 16 for framing plan and girder detail requirements.

15.2 SUPERSTRUCTURE DRAWINGS - FRAMING PLAN (Rev. 01/11)

The Framing Plan shows a single, concise graphical representation of the geometry necessary for location and detailing beam framing. Include a Framing Plan for bridges with concrete beam superstructures having any of the following conditions:

1. Horizontally curved alignment
2. Skewed substructure or splayed beams
3. Intermediate or end diaphragms
4. Significant superelevation transition within a single span

Provide a framing plan showing at a minimum the following information:

A. The distances between intermediate diaphragms measured along the centerline of beams.

B. The distances between beams (centerlines or extensions) measured along the centerline of intermediate bents/piers or FFBW.

C. For straight beams supporting curved bridge decks, the chord lengths between the centerline of intermediate bents/piers or FFBW.

D. The distances from the Station Line to adjacent beams measured along the centerline of intermediate bents/piers or FFBW.

E. Angles between centerline of beams and the centerline of intermediate substructure or begin/end bridge line.

F. Dimension along both faces of beams measured from casting beam end to centerlines of intermediate diaphragm inserts.

G. Beam numbering including span and/or unit number.

H. Stationing and span lengths along the Station Line. Dimension spans to centerline of intermediate substructure or begin/end bridge line.

I. Angles between the Station Line and begin/end bridge line and centerline of intermediate substructure components or centerlines of bearing.

J. All dimensions to the nearest 1/8-inch and all angles to the nearest second.

K. The identification of beams on the Framing Plan, consistent with detail sheets.

L. Direction of stationing adjacent to the Station Line.

M. Stationing along the station line. Show stationing from left to right.

N. Stationing for Begin/End bridge and centerline of intermediate substructures. Indicate expansion or fixed bearings.

O. Span numbers. Number from left to right in the direction of stationing.

P. All centerlines of bearing.

Q. Angle between diaphragms and beams if not normal to the girder.

R. PC and PT locations and cross reference to horizontal curve data.

S. Longitudinal length along Station Line and copings. Show location and dimensions to PT/PC's. Show radii at copings of curved superstructures.

15.3 SUPERSTRUCTURE DRAWINGS - PLAN (Rev. 01/11)

The Superstructure Plan sheet shows deck reinforcement detailing information and should be worked with a detail sheet of the superstructure section. At a minimum, include the following in the Superstructure Plan sheet:

A. Plan view of the superstructure deck. Use a scale suitable for viewing the details shown on the sheet when printed. If more than one sheet is required, use appropriate matchlines.

B. Show bar callout and spacing. This can be indicated with the first and last bar in a group shown with a callout between the two.

C. Beam type and spacing. Show beam centerlines. Show flange edges and ends as dashed. Identify beam number.

D. Gutterline and coping.

E. Traffic railing joints as per the Design Standard. Indicate type of joint and spacing. Reference the applicable Design Standard.

F. Dimension of overall width, roadway width, median location, length of spans, and overall length of bridge.

G. Phase construction limits. Show dimensions and indicate which phase each portion of the superstructure is to be constructed.

H. Beams. Show beam centerlines. Show flange edges and ends as dashed. Identify beam number. This is not necessary when a framing plan is included in the plans.

I. Outlines of diaphragms with dimensions.

J. Underdeck lighting.

K. Light pole pilaster. Reference the applicable Design Standard.

L. Scuppers and deck drains.

M. Expansion joint blockouts.

N. Traffic railing longitudinal steel. Reference applicable traffic railing Design Standard.

O. Quantity block. Include breakdown for each phase of bridge for phased construction. (Note: Structural steel quantity is not to be shown.) See the ***Instructions for Design Standards (IDS)*** for method of calculating concrete build-up quantity over FDOT Standard beams and slabs.

P. Pouring sequence. Indicate direction of pour. This can be shown on a separate sheet if necessary.

15.4 SUPERSTRUCTURE DRAWINGS - SECTION (Rev. 01/11)

At a minimum, include the following in the Superstructure Section sheet:

A. Section view of the superstructure. Detail all reinforcement visible in this view. Partial sections are discouraged. Include section at midspan and at bent/pier to show intermediate diaphragm and end diaphragm details respectively.

B. Deck thickness and cross slope. Deck thickness and reinforcement clearances are measured normal to the deck.

C. Connection between existing and proposed slabs for bridge widenings. Indicate which phase of construction the superstructure will be constructed.

D. Vertical traffic railing reinforcement to be cast into deck. Detail longitudinal slab steel to tie in with vertical traffic railing reinforcement. Reference applicable traffic railing Design Standard for longitudinal reinforcement requirements. For bridges with a raised median traffic separator, see Index 302 for connection options.

E. Traffic separator. Show as dashed and reference the appropriate ***Design Standard*** for connection details and options.

F. Show V-groove drip edge at slab coping.

G. Beam/girder spacing. Dimension deck overhang.

H. Longitudinal closure pour locations. Include dimension(s) to a known point of reference such as a beam line, gutter line, etc.

I. Depth of girder haunch for steel girders. Do not show a dimension for prestressed beam build-up.

15.5 SUPERSTRUCTURE DRAWINGS - DETAILS (Rev. 01/11)

The Superstructure Details sheets show detailing information required to construct the superstructure. This will include reinforcement details, form placement details, expansion joint information and other ancillary details such as utility hangers, traffic signals and under deck lighting. For an example illustrating the content and format of a completed Superstructure Detail sheet, see the ***Structures Detailing Manual Examples***. At a minimum, include the following in the Superstructure Details sheets:

A. Section views of the superstructure as required. Detail all reinforcement visible in this view.

B. Utility hanger details. Include details showing utility passing through diaphragms. Show expansion sleeve details where required.

C. Expansion joint details.

D. Stay-in-place form details. See Figure 15.8-3, Figure 15.9-2, Figure 15.9-3, Figure 15.9-4 and Figure 15.9-5.

E. Thickened slab end detail. Show section and plan view. Use the standard dimension and reinforcement details shown in Figure 15.5-1and Figure 15.5-2. Show top mat of reinforcement above top layer of thickened slab end reinforcement.

F. Sections through diaphragms at piers and end bents. Detail reinforcement, expansion joints, construction joints and control joints. Include compressible material if cast back-to-back (such as two or more layers of 30lb felt paper) between adjacent diaphragms at interior supports. Show dimension between adjacent diaphragms at expansion joints. Coordinate with expansion joint details.

G. Section through intermediate diaphragms. Detail reinforcement to avoid conflicts with slab steel.

H. Jacking locations. Show jacking service loads in tabular format.

Figure 15.5-1 Thickened Slab End Details

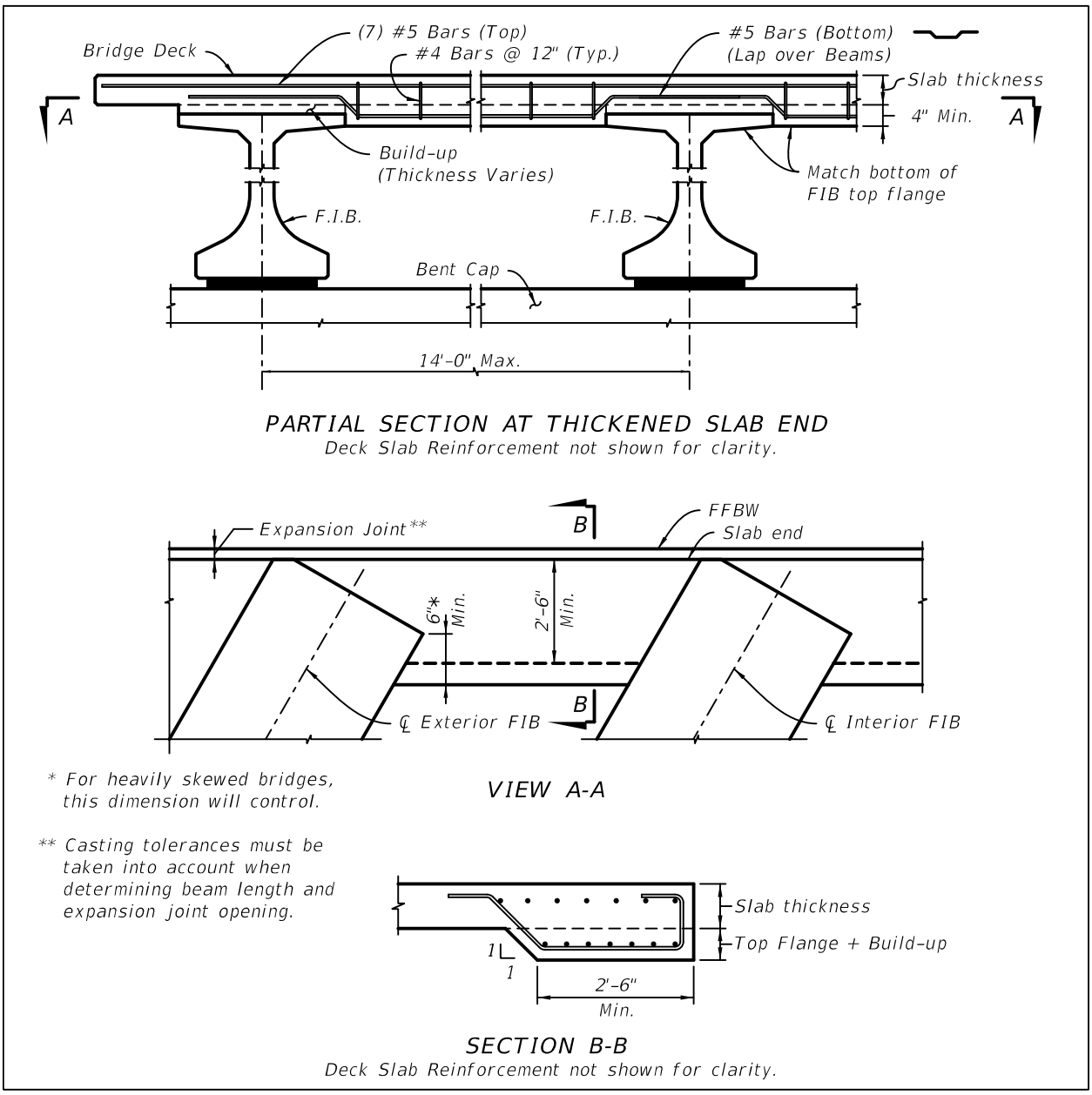

Figure 15.5-2 Thickened Slab End at Interior Support

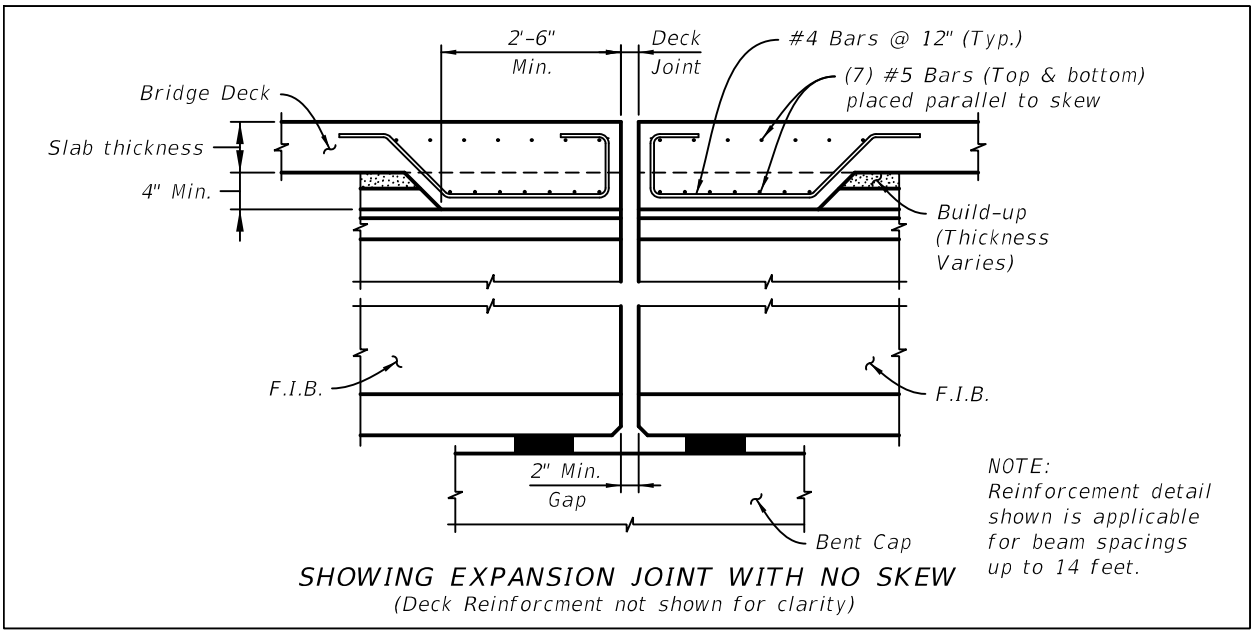

15.6 DECK DRAINS (Rev. 01/11)

Avoid the use of deck drains on bridges wherever possible. In situations where the use of deck drains is required, fully detail all aspects of the storm drain system including inlets, scuppers, conveyance pipes and attachments to the bridge. On bridges that require storm drain systems, details should be developed early in the design phase to avoid conflicts once member sizes and reinforcing schemes have been developed. See ***PPM*** Vol. 1 Chapter 26 for phase submittal requirements. See ***SDM*** Chapter 22 for additional drainage requirements on bridges.

15.7 SUPERSTRUCTURE DESIGN CONSIDERATIONS - GENERAL (Rev. 01/11)

The bridge superstructure requires a considerable amount of design and detailing to be easily constructed. The following design considerations should be incorporated to produce a more constructible, economical design:

A. Maximize the clear distance between mats of steel by using No. 5 rebar and tightening spacing, if possible. This must be balanced with reinforcement spacing minimum requirements.

B. For cross sections with a slope break point, do not specify a straight bar in the bar list with an indication to field bend as necessary. Instead, calculate the angle and call for the appropriate bar type in the bar list.

C. Design bridge deck reinforcement so that transverse main steel is on the exterior of each mat. Distribution steel should be on the interior of each mat.

D. Detail closure pours where required considering differential deflection between phases/adjacent beams. Closure pours should be a minimum of 2 feet wide.

15.8 SUPERSTRUCTURE DESIGN CONSIDERATIONS - PRESTRESSED BEAMS (Rev. 01/11)

In addition to the applicable sections above, the following issues should be addressed when designing and detailing superstructures supported by prestressed concrete beams:

A. Avoid conflicts between diaphragm reinforcement and slab reinforcement. Detail these areas in the plans to ensure that there are no conflicts. Include diaphragm reinforcement in the bar list.

B. When end diaphragms are required on spans with a Florida-I beam superstructure, partial depth diaphragms may be used. Show one vertical row of #5 bars at a minimum in each diaphragm threaded into inserts cast into beam. Show insert layout in the framing plan. See applicable beam Design Standard for vertical spacing of inserts. See Figure 15.8-1 and Figure 15.8-2 for details. Details shown are minimum dimensions and reinforcing. Diaphragm dimensions and reinforcing can be increased when required by analysis.

Commentary: If the purpose of the diaphragm is to transfer lateral loads, diaphragms must be designed to resist these forces and to transfer these forces to the bearings and to the substructure. For practicality, the greater of (1) straight portion of the web depth or (2) one half the beam depth may be used.

C. Add a note when intermediate diaphragms are required to alert fabricator to see Framing Plan sheet(s) for insert spacing and layout.

D. Deck pour sequencing details will be required for decks supported by continuous beams or for large decks that cannot reasonably be poured monolithically. Show positive regions poured first and locate construction joints at points of dead load moment contraflexure.

E. Show stay-in-place (S.I.P) form details. See Figure 15.8-3 for S.I.P. details related to prestressed-beam superstructures.

F. Square all beam ends on simple spans utilizing Florida-I beam superstructures. See Figure 15.8-4, Figure 15.8-5 and Figure 15.8-6 for details related to the squaring of beam ends.

Figure 15.8-1 Concrete End Diaphragm Details

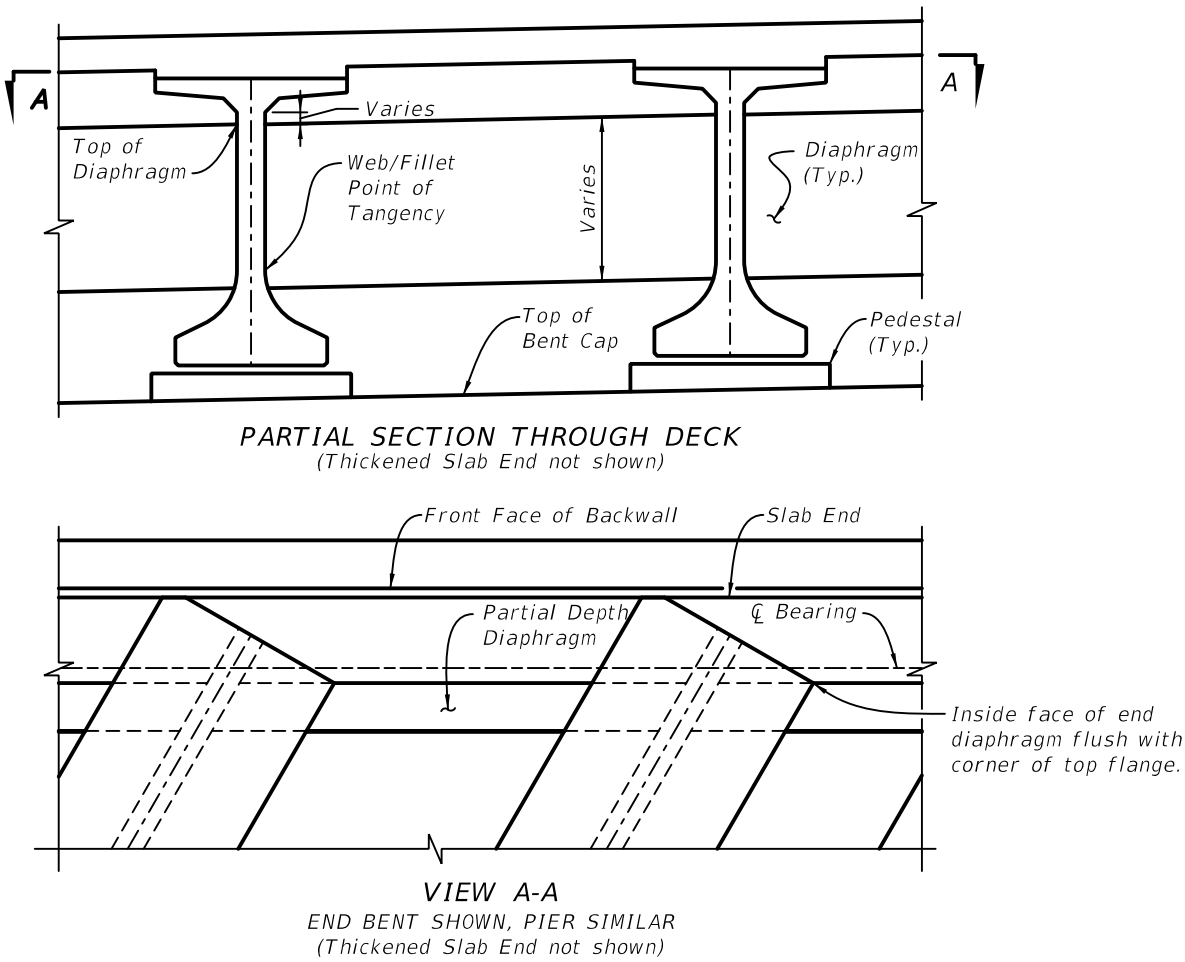

Figure 15.8-2 Concrete End Diaphragm Reinforcement Details

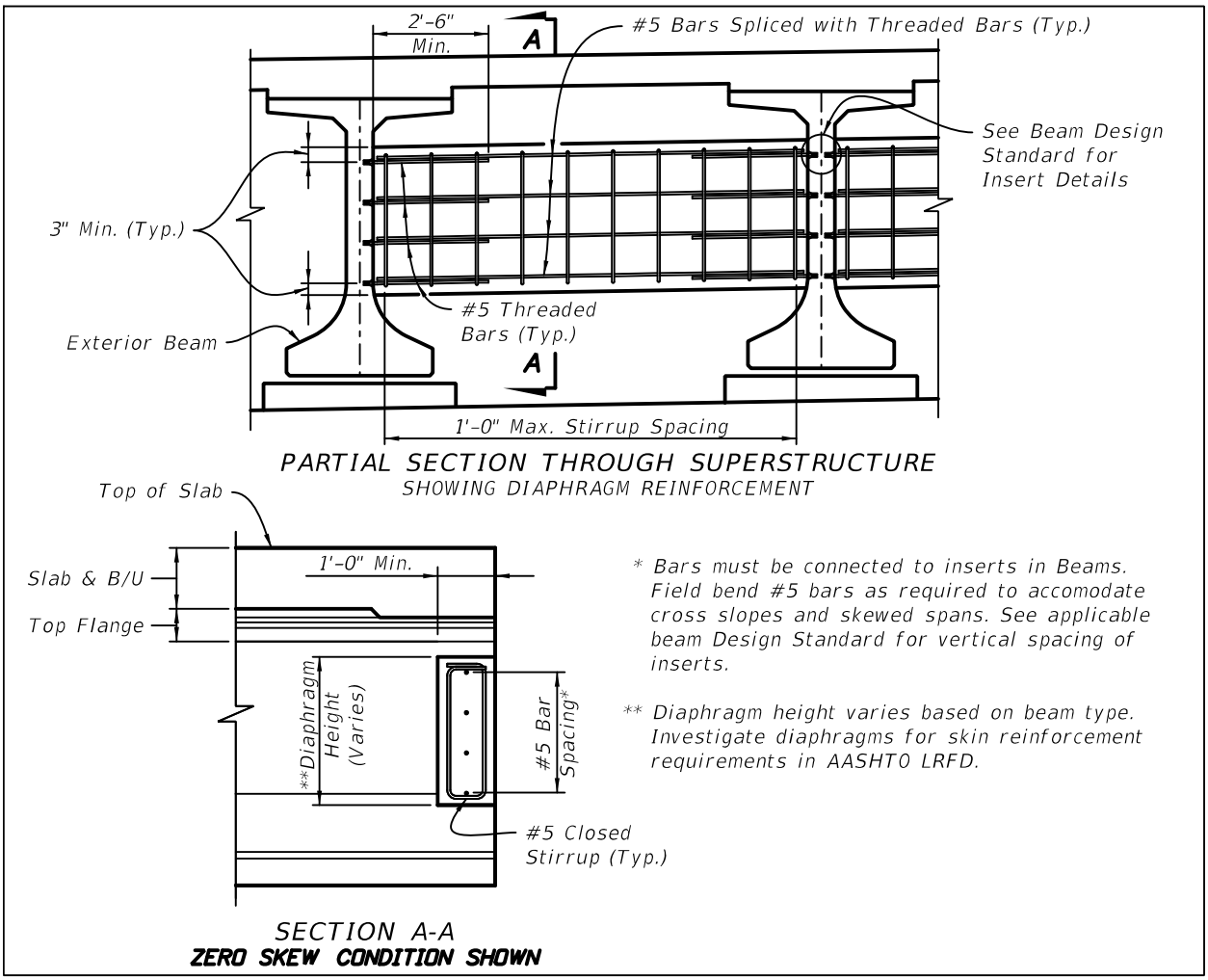

Figure 15.8-3 S.I.P. Form Details for Prestressed Concrete Beams

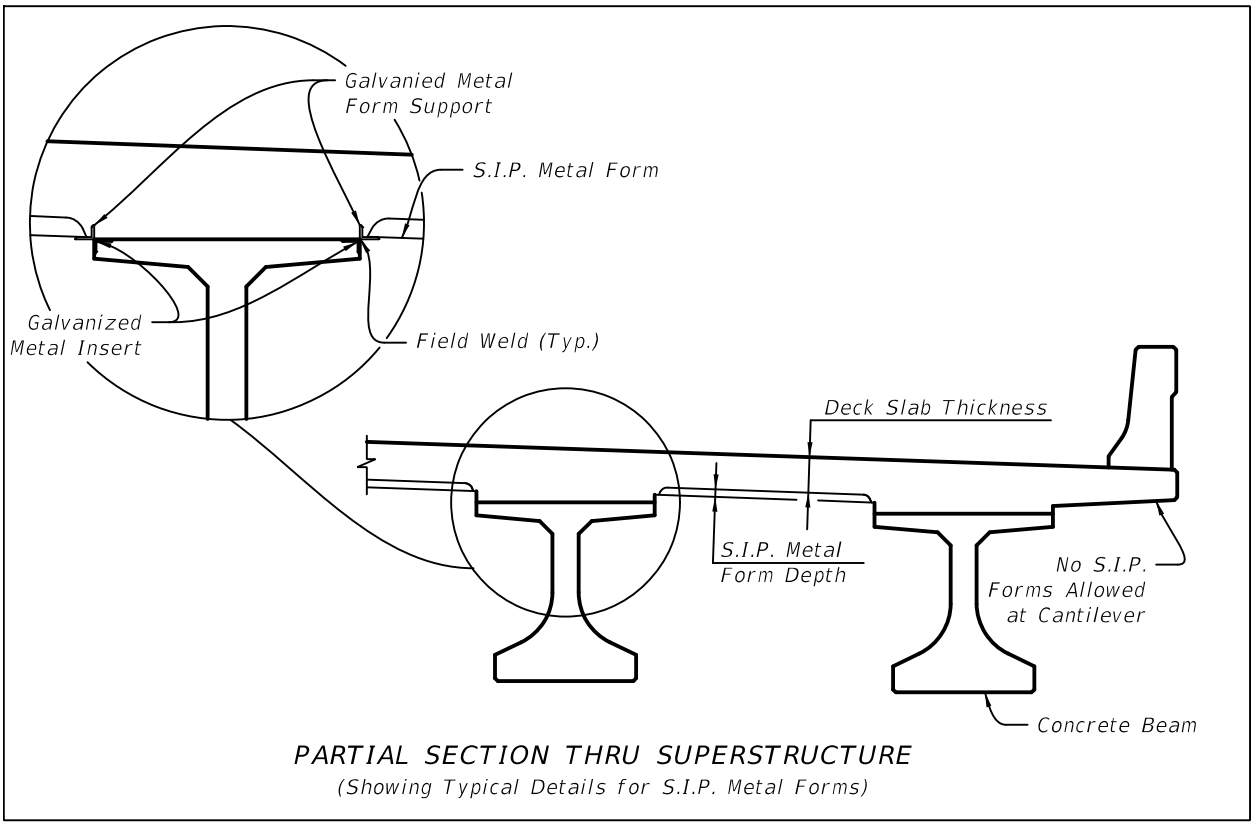

Figure 15.8-4 Squared Beam End Details – Exp. Joint at Int. Support

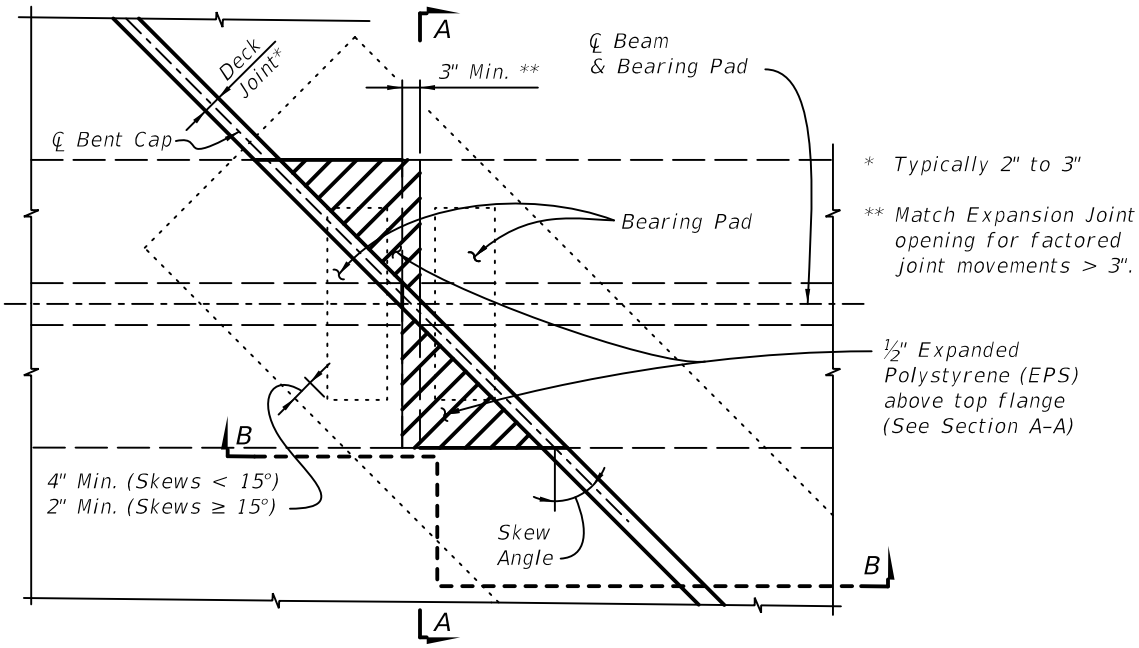

EXPANSION JOINT AT INTERIOR SUPPORT

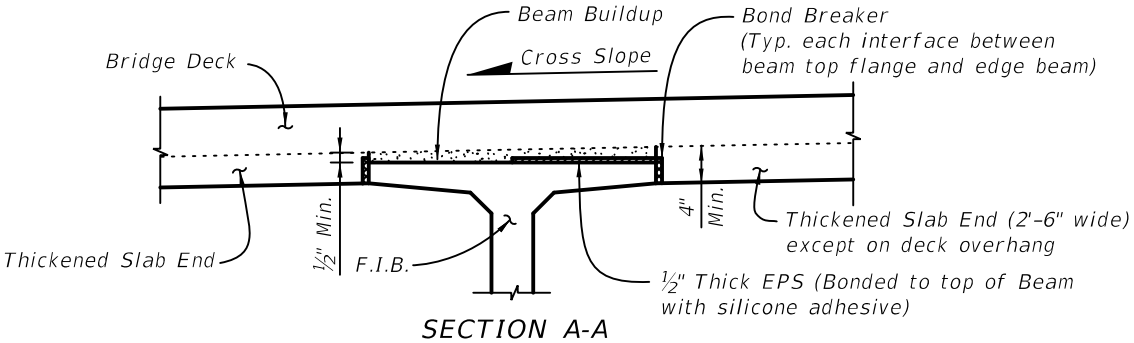

SECTION A-A
TYPICAL AT EXPANSION JOINT

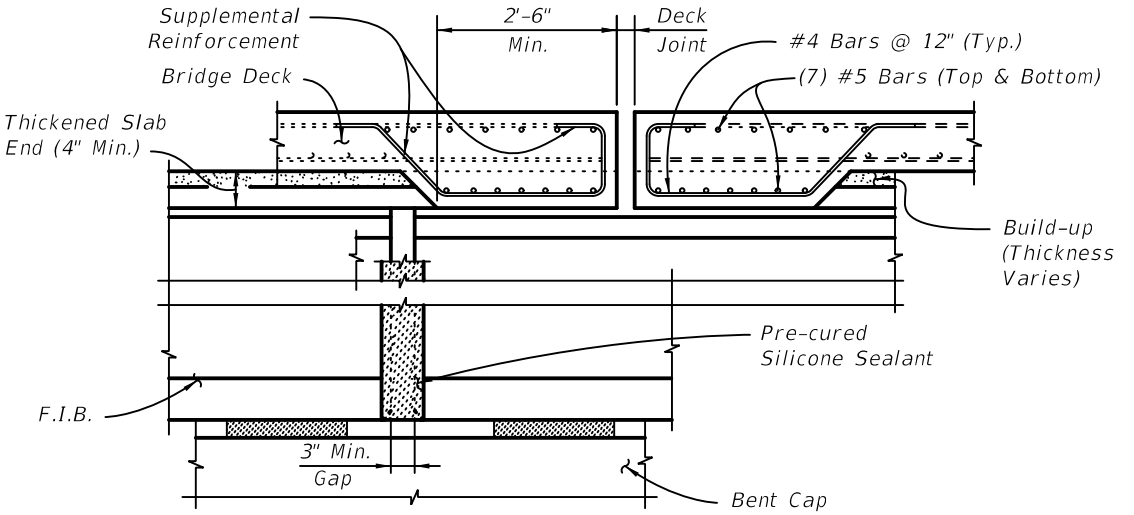

SECTION B-B - SECTION THROUGH DISCONTINUOUS DECK AT EXPANSION JOINT
(Deck Reinforcement Not Shown for Clarity)

Figure 15.8-5 Squared Beam End Details-Cont. Deck at Int. Support

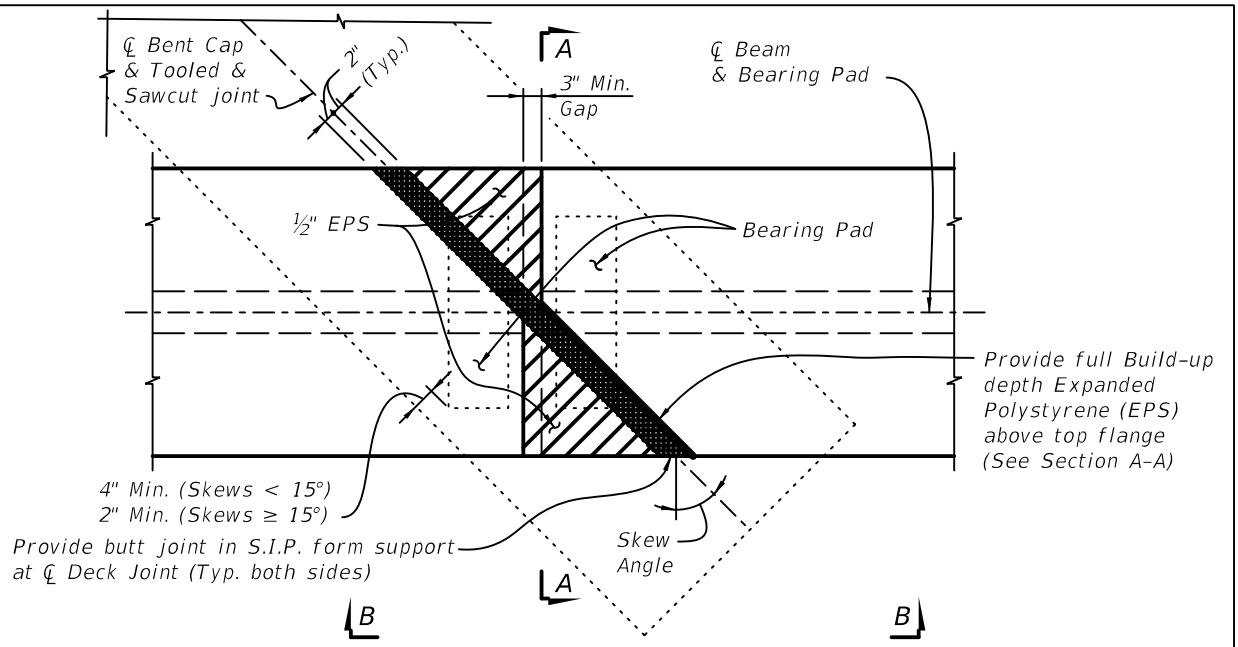

CONTINUOUS DECK AT INTERIOR SUPPORT
(Bridge Deck Not Shown For Clarity)

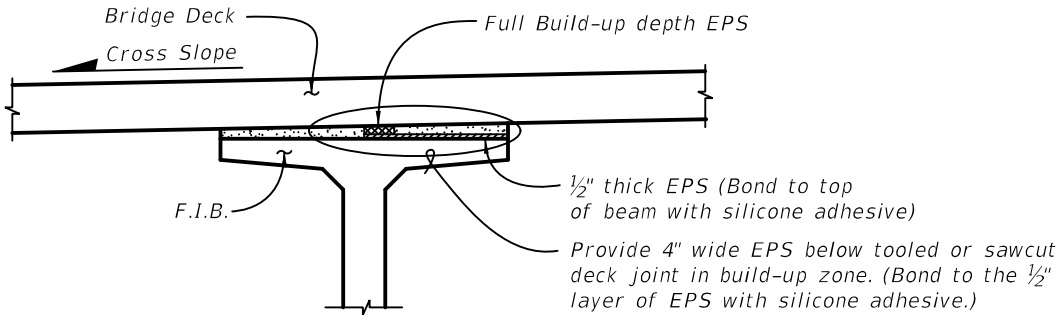

SECTION A-A - TYPICAL SECTION AT CONTINUOUS DECK
TOOLED OR SAWCUT JOINT

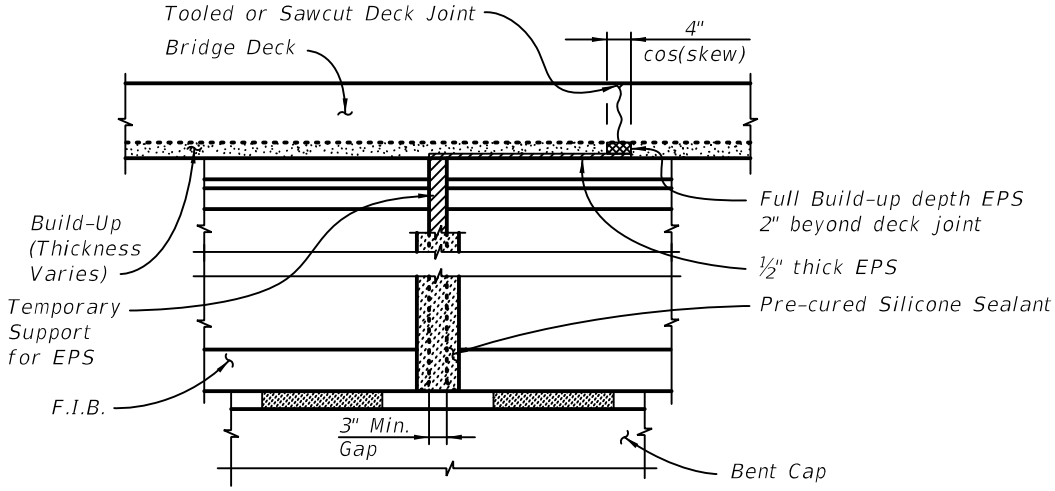

VIEW B-B - ELEVATION OF CONTINUOUS DECK AT INTERIOR SUPPORT

Figure 15.8-6 Squared Beam End Details - Expansion Joint at End Bent

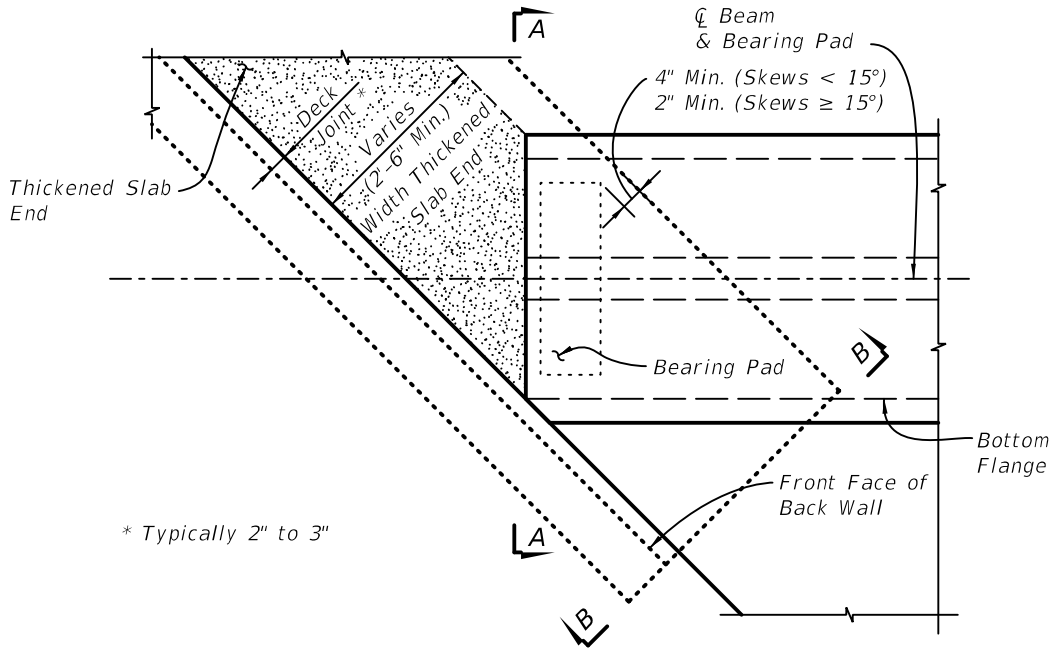

EXPANSION JOINT AT END BENT
(Bridge Deck Not Shown For Clarity)

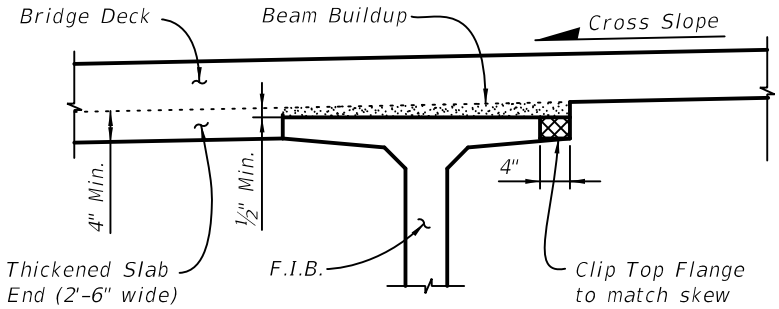

SECTION A-A - TYPICAL AT END BENT EXTERIOR BEAM

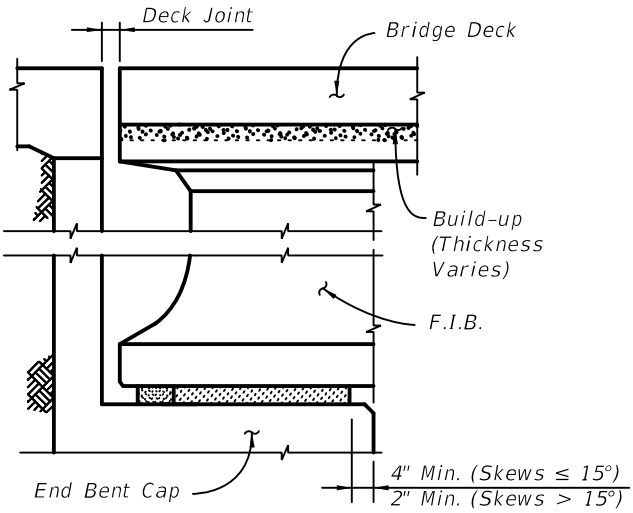

VIEW B-B - ELEVATION AT END BENT EXTERIOR BEAM

15.9 SUPERSTRUCTURE DESIGN CONSIDERATIONS - STEEL GIRDERS (Rev. 01/11)

In addition to the applicable sections above, the following issues should be addressed when designing and detailing superstructures supported by steel girders:

A. Design edge beam at ends of spans or continuous units to transmit wheel loads into end crossframe. See Figure 15.10-1.

Figure 15.9-1 Edge Beam Detail - Steel Girders

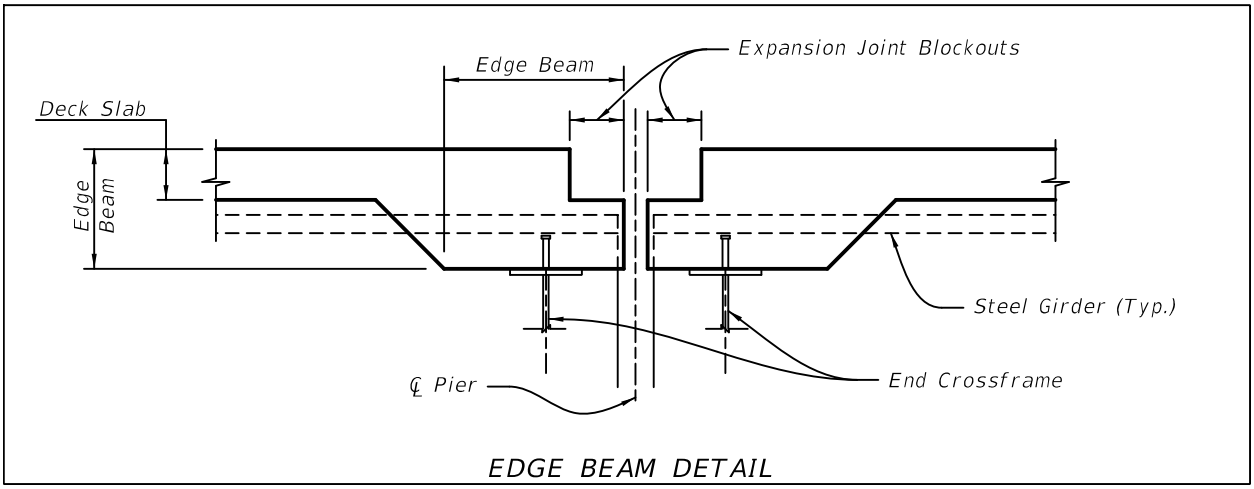

B. Detail superstructure with a constant-depth haunch within a given continuous unit. Haunch should be a minimum of 1" measured from the top of the thickest top flange to the bottom of the deck. This depth, in conjunction with the cross slope, must be taken into account when designing shear stud height. Show the dimension from the top of web to the top of slab in the Superstructure Details.

C. Show S.I.P form details. See Figure 15.9-2 and Figure 15.9-3 for I-girder S.I.P. form details and Figure 15.9-4 and Figure 15.9-5 for box girder S.I.P. form details. Stay-in-place forms are required for the interior portion of box girders.

Figure 15.9-2 S.I.P. Form Details for Steel I-Girders (Section)

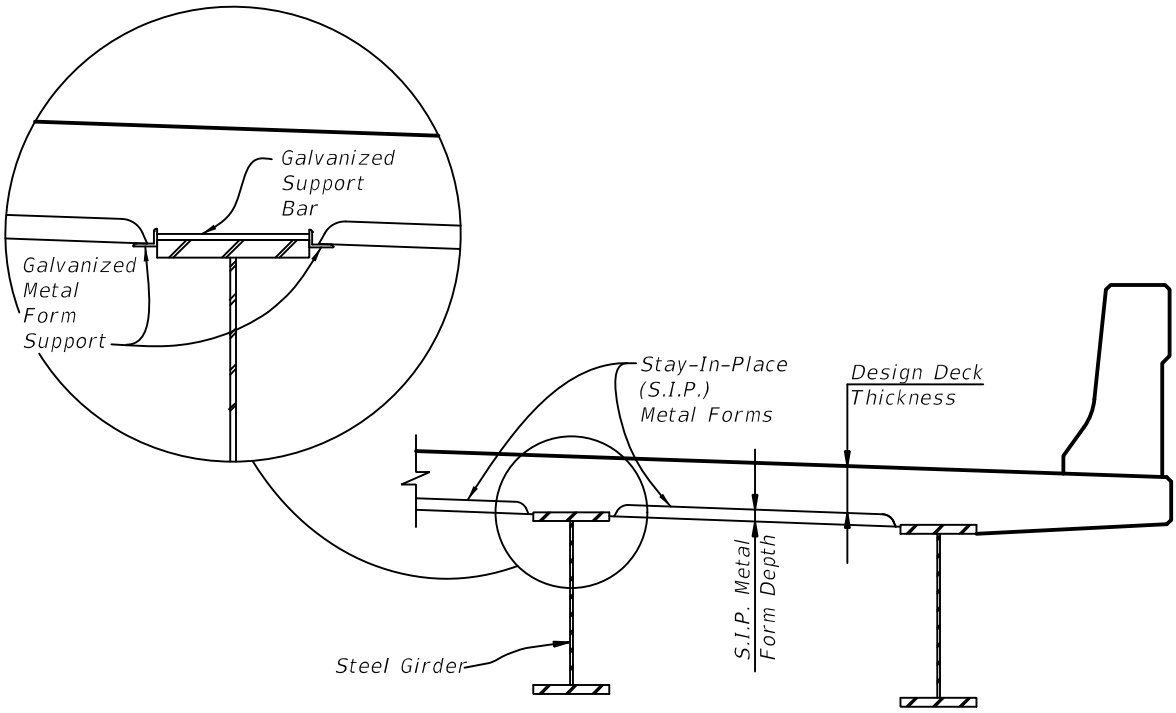

PARTIAL SECTION THRU SUPERSTRUCTURE
(Showing Typical Details for S.I.P. Metal Forms)

Figure 15.9-3 S.I.P. Form Details for Steel I-Girders (End Detail)

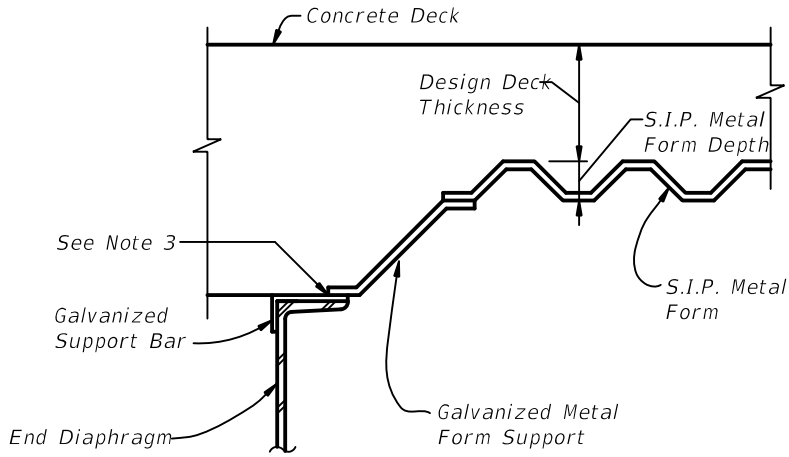

PARTIAL SECTION THRU END OF SPAN

Figure 15.9-4 S.I.P. Form Details for Steel Box Girders (Section)

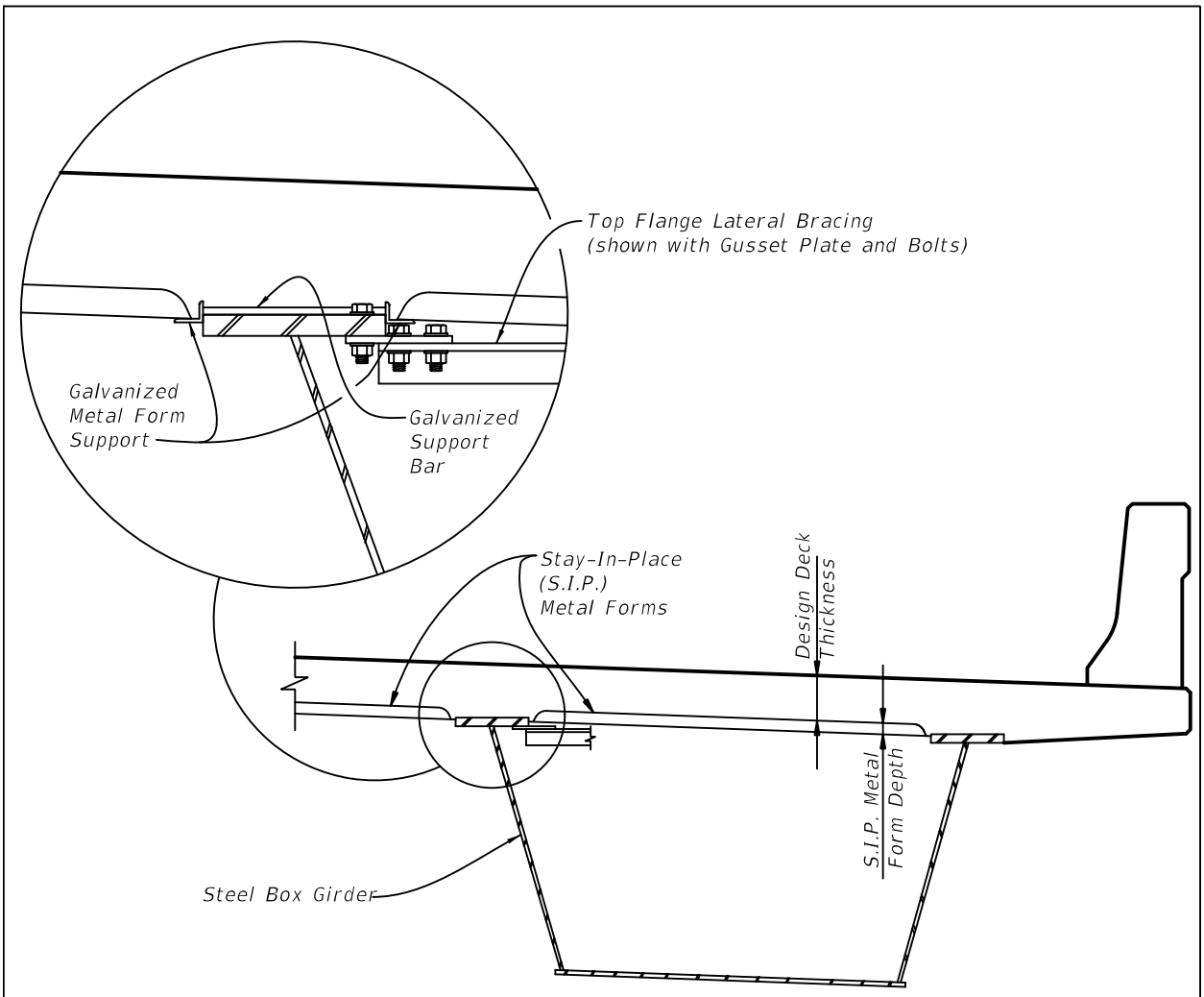

PARTIAL SECTION THRU SUPERSTRUCTURE
(Showing Typical Details for S.I.P. Metal Forms)

Figure 15.9-5 S.I.P. Form Details for Steel Box Girders (End Detail)

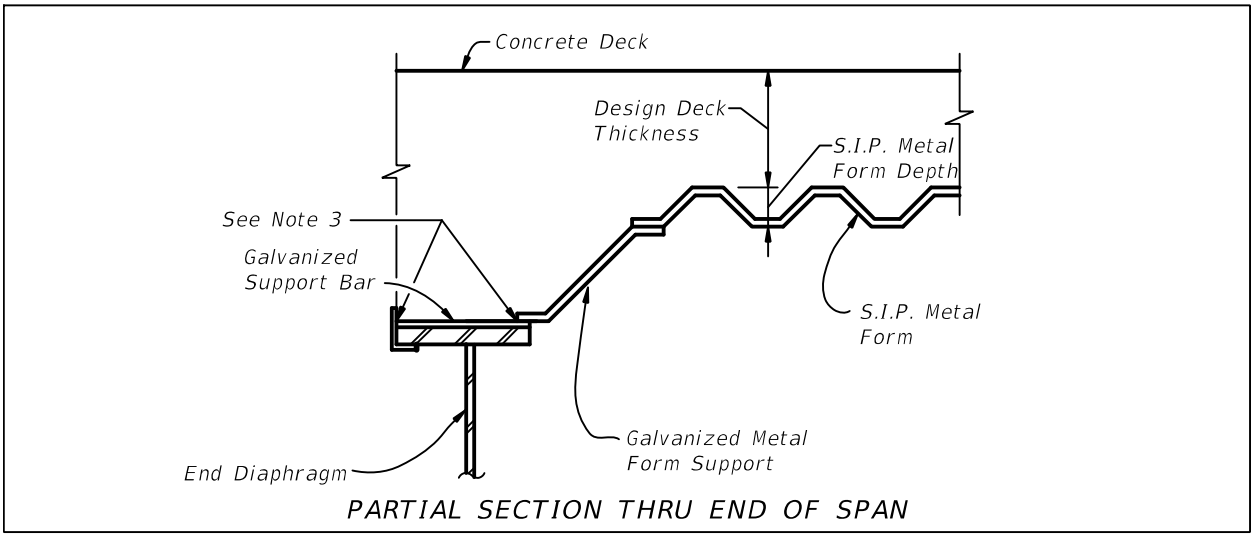

PARTIAL SECTION THRU END OF SPAN

16 STRUCTURAL STEEL GIRDERS

16.1 GENERAL

A. Structural steel drawings and details will be used by fabricators and contractors for the production and erection of structural steel members. This chapter does not cover movable bridges.

B. Refer to the following ***AASHTO/NSBA*** Steel Collaboration Standards (available at http://www.steelbridges.org/) with exceptions as detailed in this chapter:

1. G 1.2 - 2003 Design Drawing Presentation Guidelines
2. G 1.4 - 2006 Guidelines for Design Details
3. G 12.1 - 2003 Guidelines for Design for Constructability

C. Check AISC on-line database of available structural steel shapes before specifying a particular steel shape and size. Preference should be given to shapes and sizes with multiple producers due to increased availability and lower cost.

16.2 SHOP DRAWINGS

Refer to the following ***AASHTO/NSBA*** Steel Bridge Collaboration Standards for guidance on review and approval of steel shop drawings (available at http://www.steelbridges.org/):

1. G 1.1 - 2000 Shop Detail Drawing Review/Approval Guidelines
2. G 1.3 - 2002 Shop Detail Drawing Presentation Guidelines
3. ***Plans Preparation Manual (PPM)*** - Volume 1, Chapter 28
4. ***FDOT Standard Specifications for Road and Bridge Construction***- Section 5

16.3 FRAMING PLAN DRAWINGS AND DETAILS - STEEL I-GIRDERS

Framing plans are required for all bridges supported by a steel superstructure. For examples illustrating the content and format of completed Framing Plan sheets, see the ***Structures Detailing Manual Examples***. Provide a framing plan for steel I-girder superstructures showing the following information (see Figure 16.3-1, Figure 16.3-2, Figure 16.3-3 and Figure 16.3-4):

A. Transverse stiffener spacing. Show transverse stiffeners on one side of girder only. Show on inside of exterior girders.

B. Lateral bracing spacing.

C. The distances between girders (centerlines or extensions) measured along the centerline of bearing.

D. The distances from the Station Line to adjacent girders measured along the centerline of bearing

E. Dimension to field splices along centerline girder from centerlines of bearing. Number field splices from left to right. Clearly label optional field splices.

F. Girder radius of curvature for each girder, tabulate if necessary for clarity.

G. Crossframe location. Indicate type of crossframe.

H. Temporary bracing required for construction.

I. Distance from centerline bearing to the FFBW.
J. Girder numbering including span and unit number.
K. Distance between centerlines of bearing.
L. Location of PC/PT along centerline of girders.
M. Direction of stationing.

Figure 16.3-1 I-Girder Framing Plan

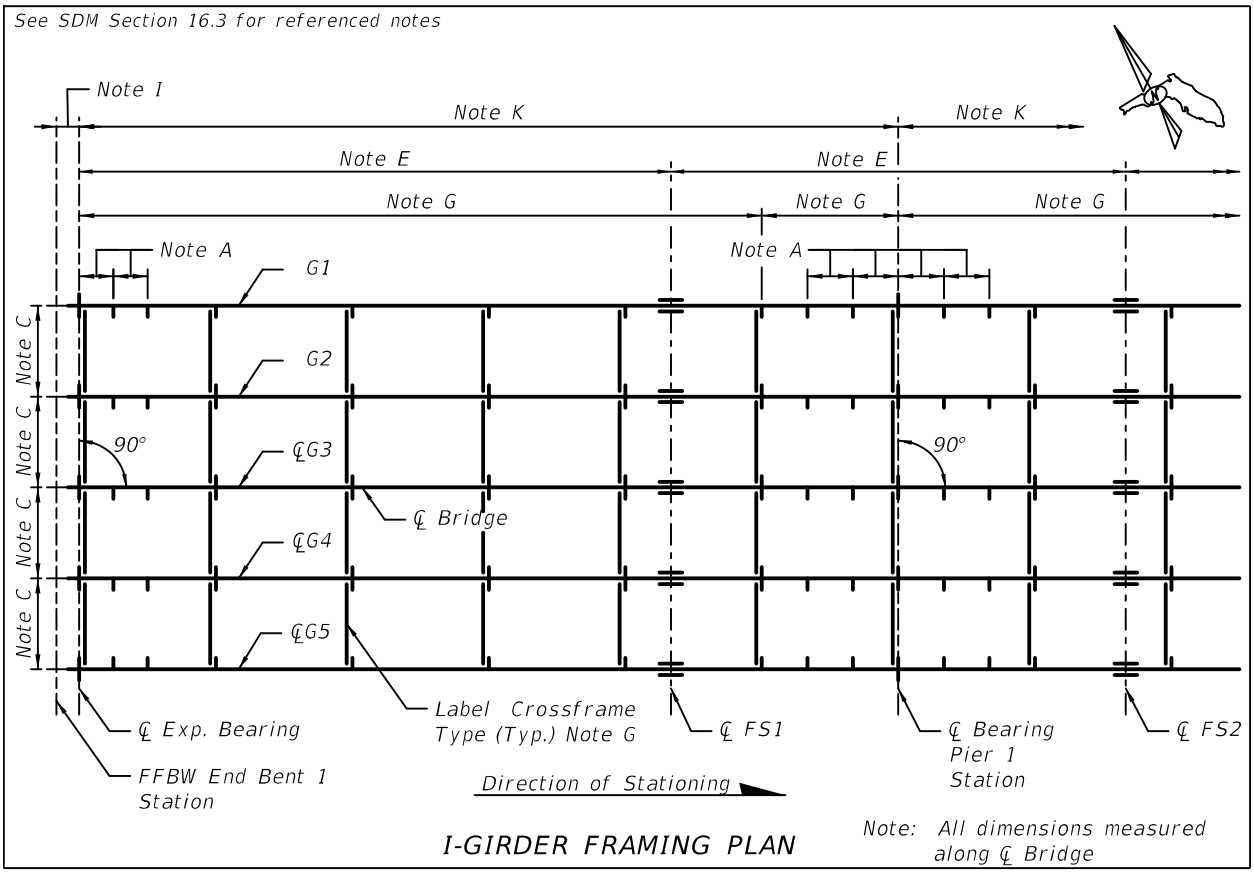

Figure 16.3-2 Framing Plan Details - Large Skews

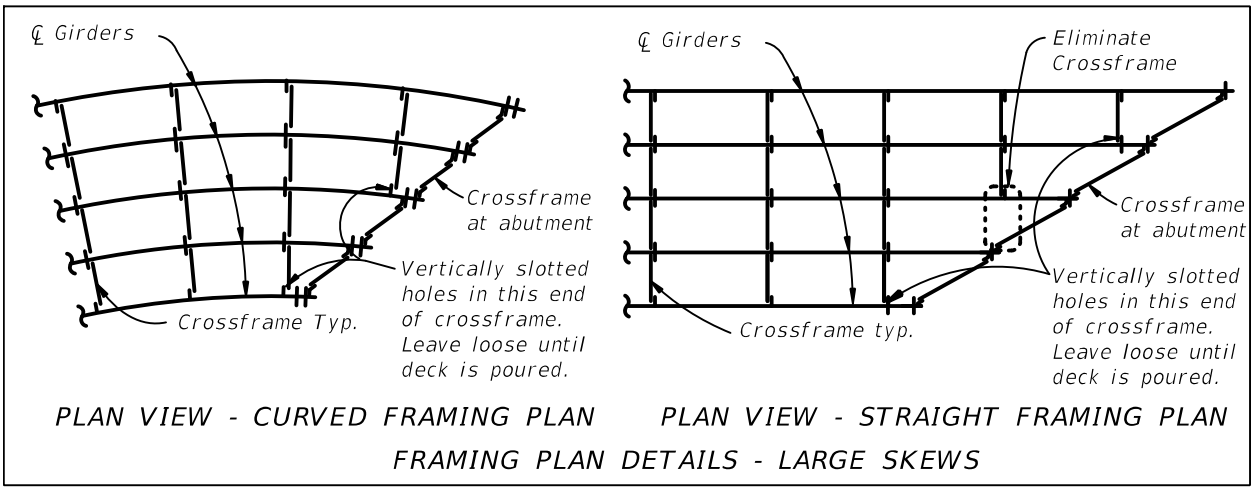

Figure 16.3-3 Framing Plan at Gore Area

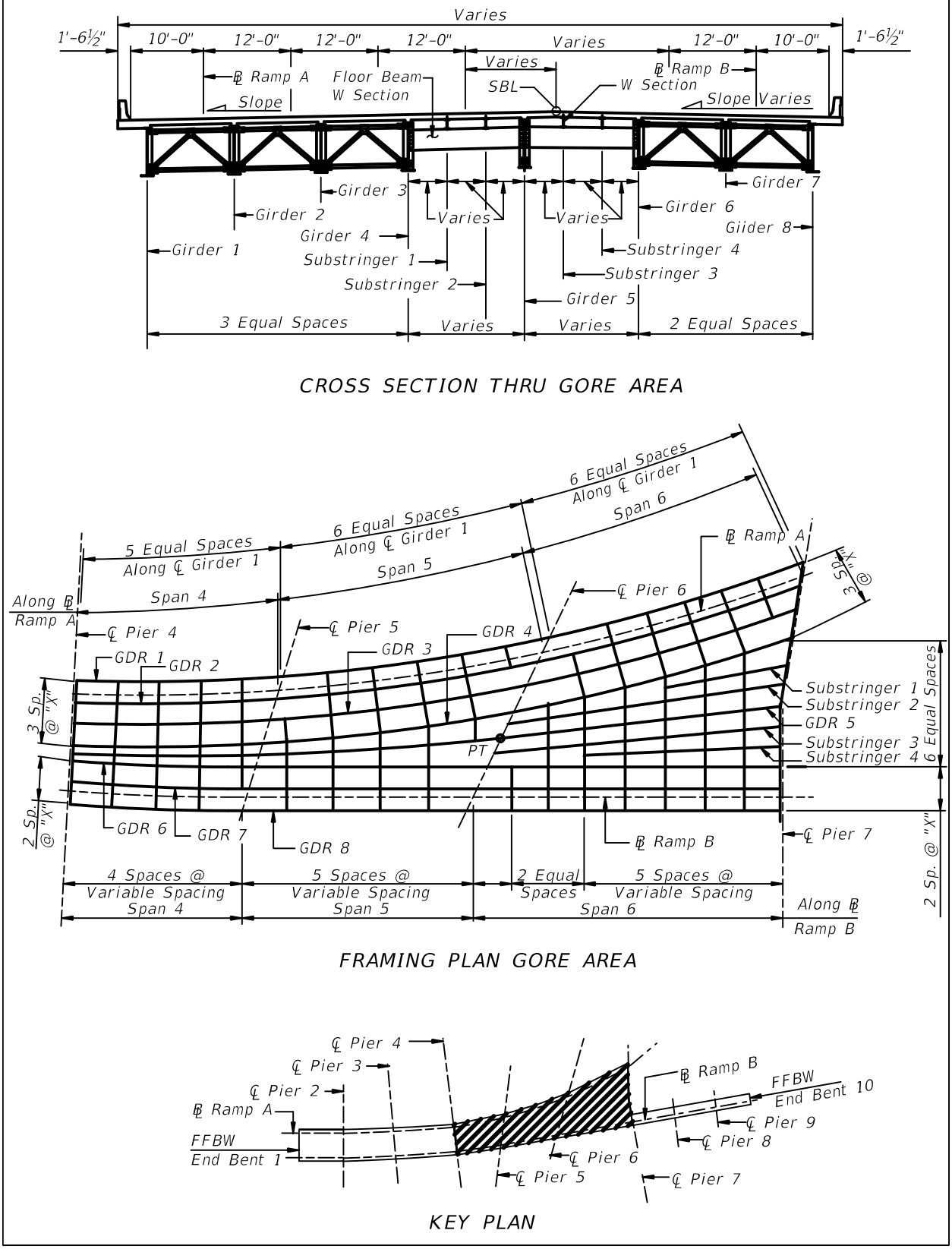

Figure 16.3-4 Framing Plan at Tapered Ramp

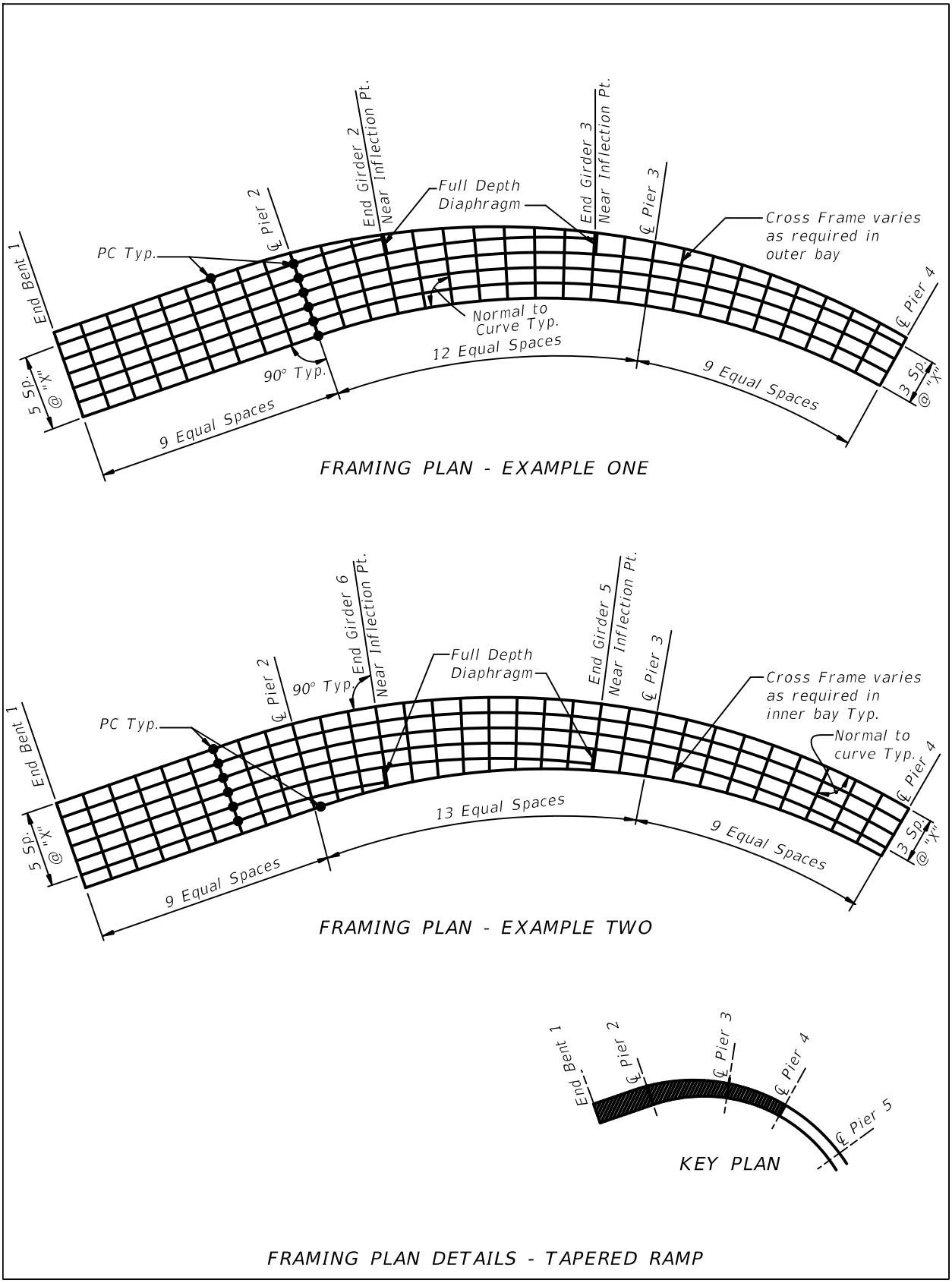

16.4 FRAMING PLAN DRAWINGS AND DETAILS - STEEL BOX GIRDERS

Provide a framing plan for steel box superstructures showing the following information (see Figure 16.4-1):

A. All applicable information shown in ***SDM*** 16.3.

B. Access opening location and spacing.

C. Drain hole location and spacing.

D. Show limits of longitudinal stiffeners.

E. In plan view, show centerline of top of web. (Do not show width of top flange.)

F. Permanent/temporary external diaphragm/crossframe locations.

Figure 16.4-1 Curved Box Girder Framing Plan

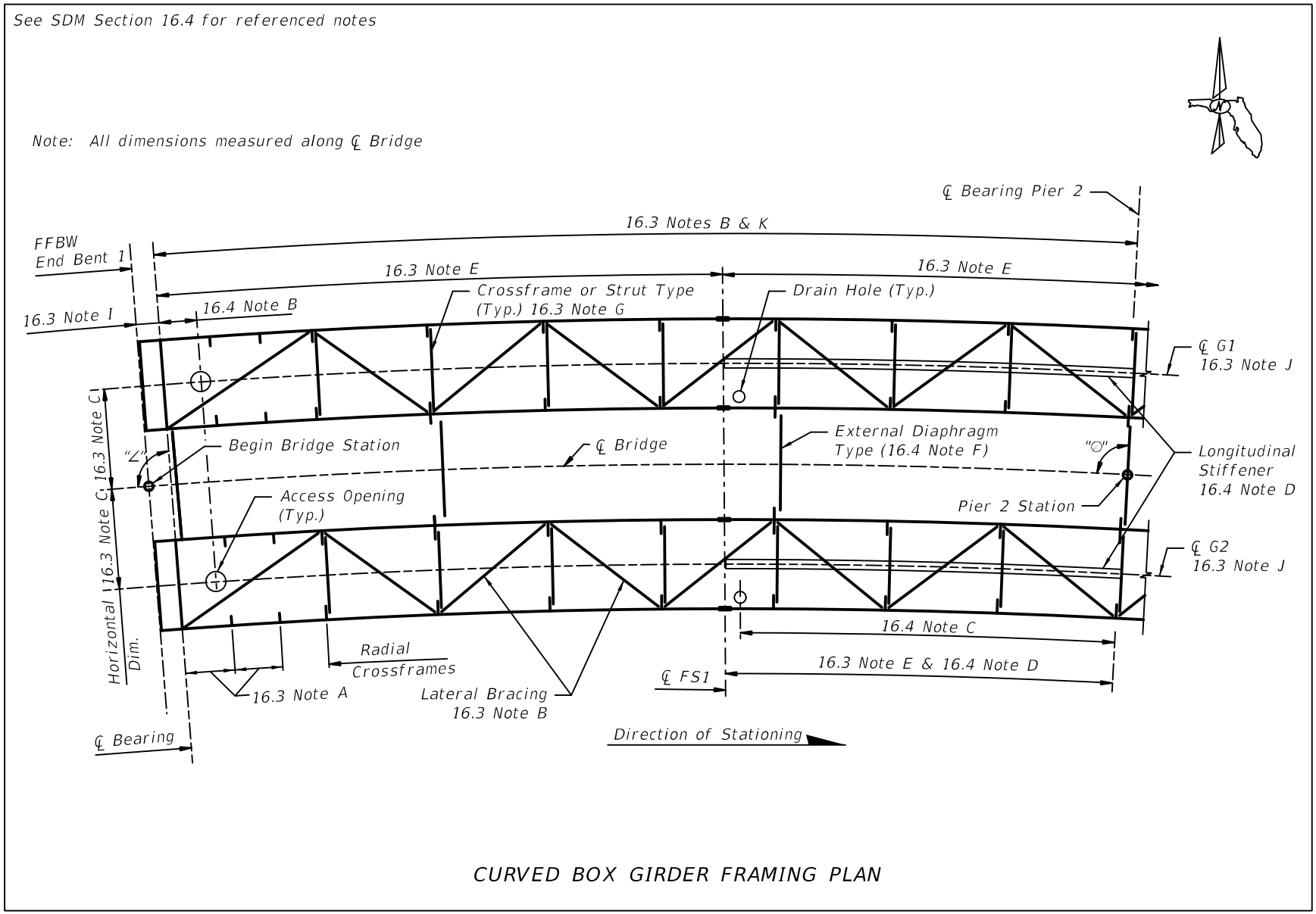

16.5 GIRDER ELEVATION

Girder Elevation sheets are required on all bridges utilizing a steel superstructure. The detailer may include the girder elevation on the Framing Plan, but this may be a separate sheet. Much of the information presented here can be shown in tabular format, as required. Detail girder elevation upstation left to right. At a minimum, include the following on the Girder Elevation sheet:

A. Elevation view of girder. Vertical scale may be exaggerated for clarity. Provide suitable matchlines for girders that require more than one sheet.

B. Shear connector spacing along centerline of girder (centerline of box for box girders).

C. Flange plate sizes.

D. Web plate size.

E. Weld sizes and types. Reference welding symbols at www.aws.org.

F. Field splices. Number splices sequentially left to right. Designate optional splices as required.

G. Plates to be Charpy V-Notch (CVN) tested (use legend). Indicate where Charpy V-Notch testing is required along top and bottom flange dimension lines or by indicating web locations with note/arrow. Indicate Fracture Critical Members by notation (FCM).

H. Dimensions for length along centerline girder as follows:

   1. From girder end to centerline of bearing at the end of the unit.
   2. Between centerline piers and/or centerline of bearing at the end of the unit.
   3. Between centerline(s) of bearing and field splice(s).
   4. Girder section changes. Show this dimension for top flange, bottom flange or web section changes.
   5. Limits of flange tension and stress reversal zones.

I. Bearing stiffener and jacking stiffener spacing from girder end and/or centerline bearing at intermediate supports. Bearing and jacking stiffeners should be spaced not less than 8" apart.

J. Show and dimension any penetrations in the web for drainage pipes, post tensioning, sign/signal attachments, etc.

K. Material designation requirements for hybrid designs.

Figure 16.5-1 Typical Girder Elevation

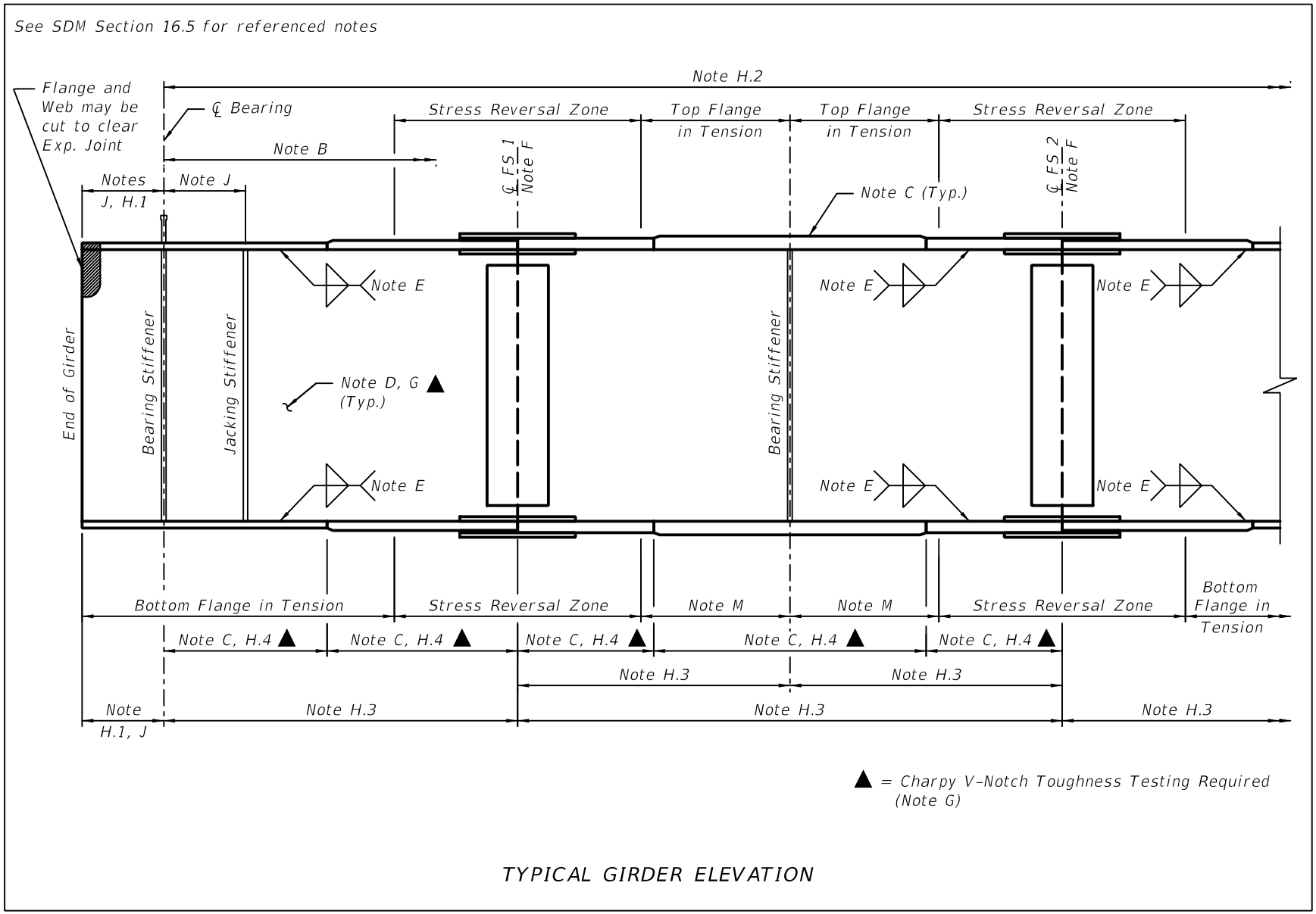

16.6 I-GIRDER STIFFENER DETAILS (Rev. 01/11)

Stiffener Detail sheets should include details for fabrication and placement of bearing/ jacking stiffeners, intermediate stiffeners and crossframe connection plates. At a minimum, include the following on the Stiffener Details sheet (see Figure 16.6-1, Figure 16.6-2,Figure 16.6-3 and Figure 16.6-4):

A. Section of girder or diaphragm showing stiffener plate dimensions. Show enough sections to adequately address all stiffener scenarios. Do not double label a single section.

B. Plate sizes and dimensions for all stiffeners and connection plates. Size stiffeners taking into account bolt patterns and associated tolerances. Detail stiffeners in whole inch widths.

C. Weld type and dimension. Use appropriate welding symbols.

D. End conditions for stiffeners. Use "Finish to Bear" at the bottom of jacking and bearing stiffeners only.

E. Corner clip dimensions. Generally, a clip height of 3" is preferred. Maintain the same clip dimensions throughout.

F. Tab plate and cut back details.

G. Weld termination detail.

H. Show jacking and bearing stiffeners normal to bottom flange for vertical grades up to 4%. All connection plates and intermediate stiffeners should be detailed normal to top flange.

I. Intermediate stiffeners on one side only and inside only for exterior girders.

Figure 16.6-1 Weld Termination Detail

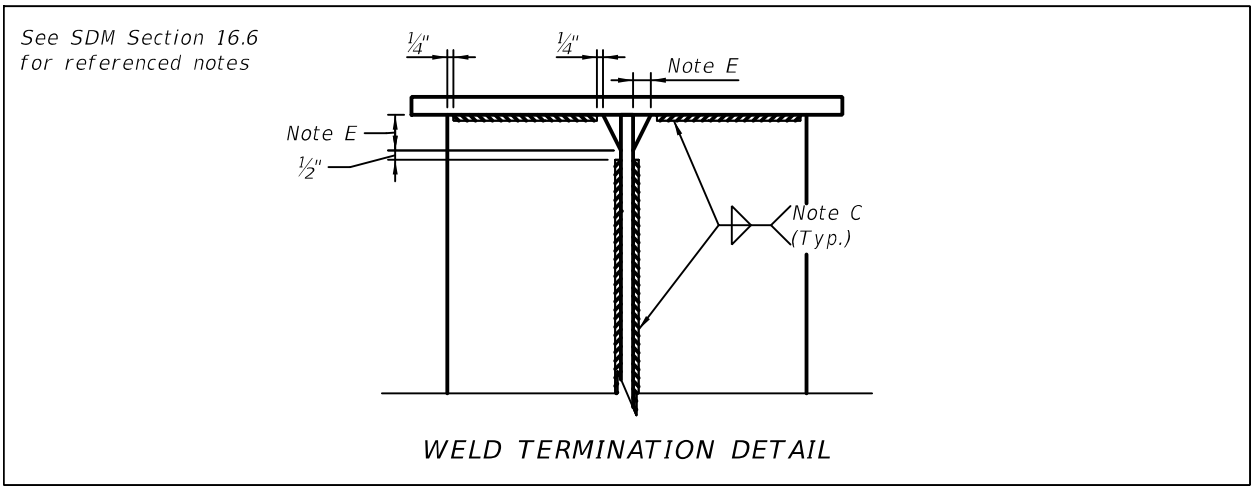

Figure 16.6-2 Tab Plate Detail

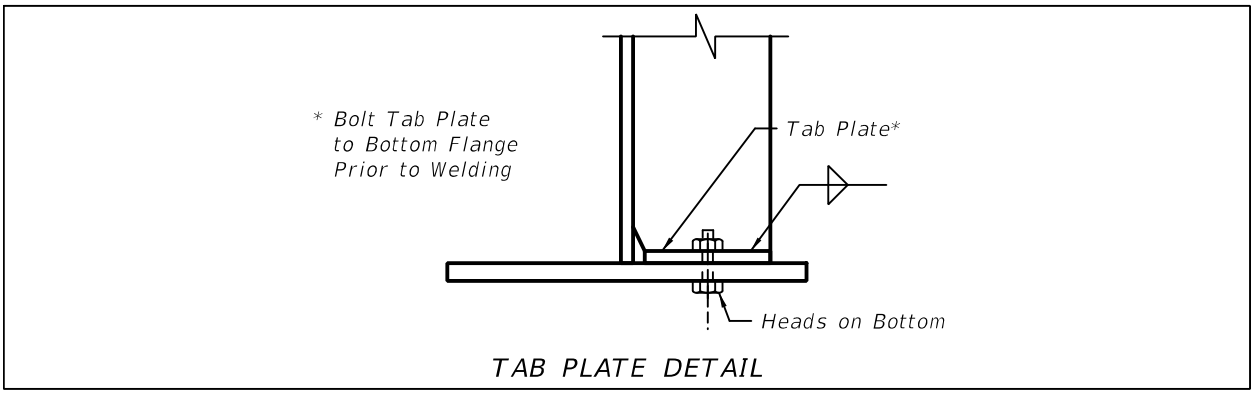

Figure 16.6-3 Standard Clip Options

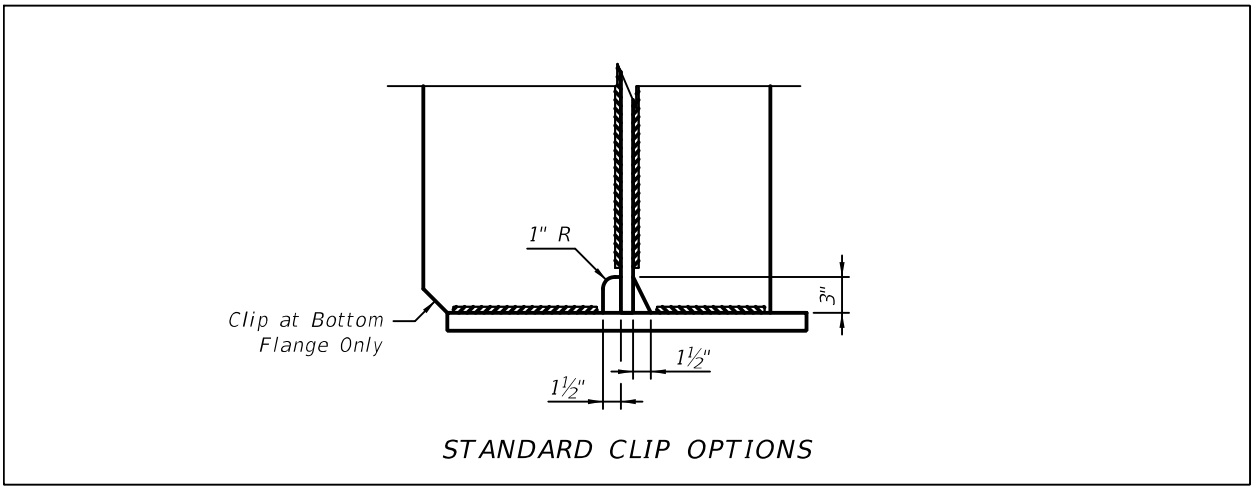

Figure 16.6-4 Girder Details

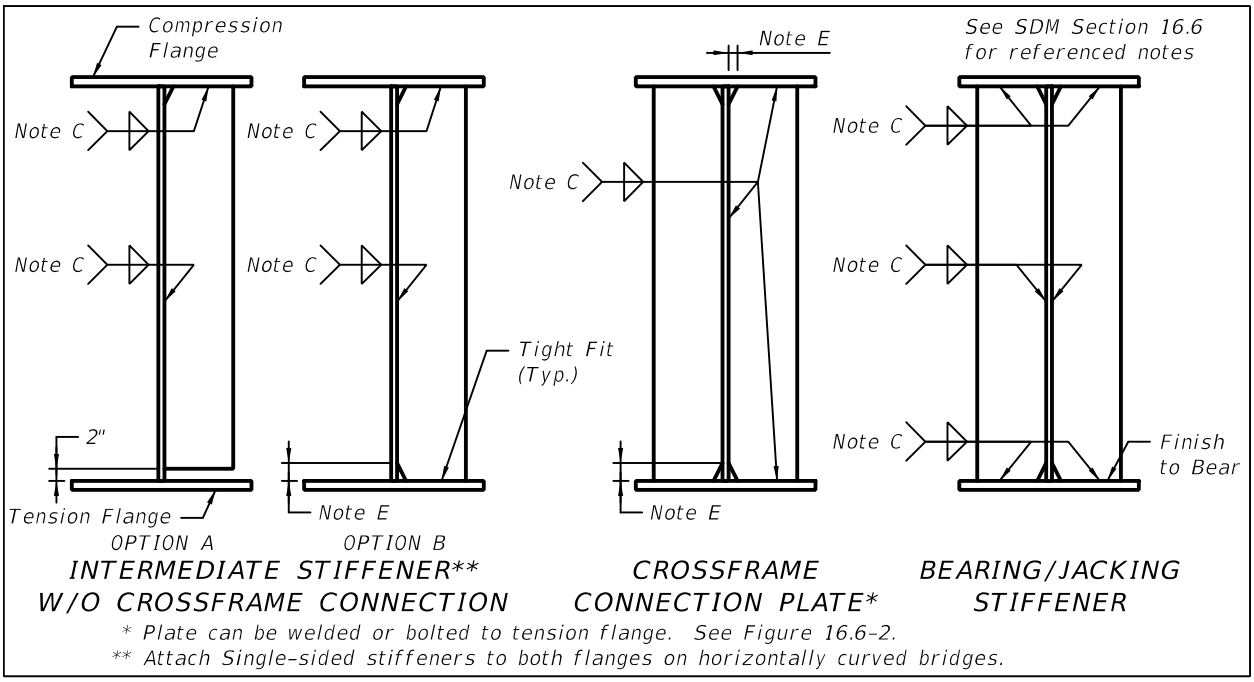

16.7 CROSSFRAME DETAILS - I-GIRDERS

Crossframe Detail sheets should include details for fabrication and placement of intermediate and end crossframes. At a minimum, include the following on the Crossframe Details sheet (see Figure 16.7-1 and Figure 16.7-2):

A. Partial section of superstructure showing typical bay. Show at least one section for each type of end crossframe and intermediate crossframes.

B. Bolt layout and spacing. Maintain minimum edge distances taking tolerances into account. Detail bolt patterns normal to girders.

C. Plate thickness for gusset plates. Keep plates rectangular.

D. Member sizes (angles, C-channels, WT-sections, etc.). Use standard shapes for all members. Show angles with horizontal leg on the upper side of member.

E. Shear connector spacing for end crossframes. Be aware of spaces required to bolt-up end crossframes.

F. Weld detail with dimensions. Weld termination details at all gusset and connection plates. Generally, ¼" fillet welds are preferable. Terminate welds ½" from edge.

G. Bolt hole sizes when oversized or slotted holes are required. Field-drilled connections are preferred at closure pour bays.

H. Partial plan view of crossframe showing bent plates at skewed supports.

I. Details for temporary crossframes.

J. Deck drainage piping conflict details.

K. Dimension between top of web and top of top chord of crossframe (channel for end crossframes).

Figure 16.7-1 Typical I-Girder Crossframe Details

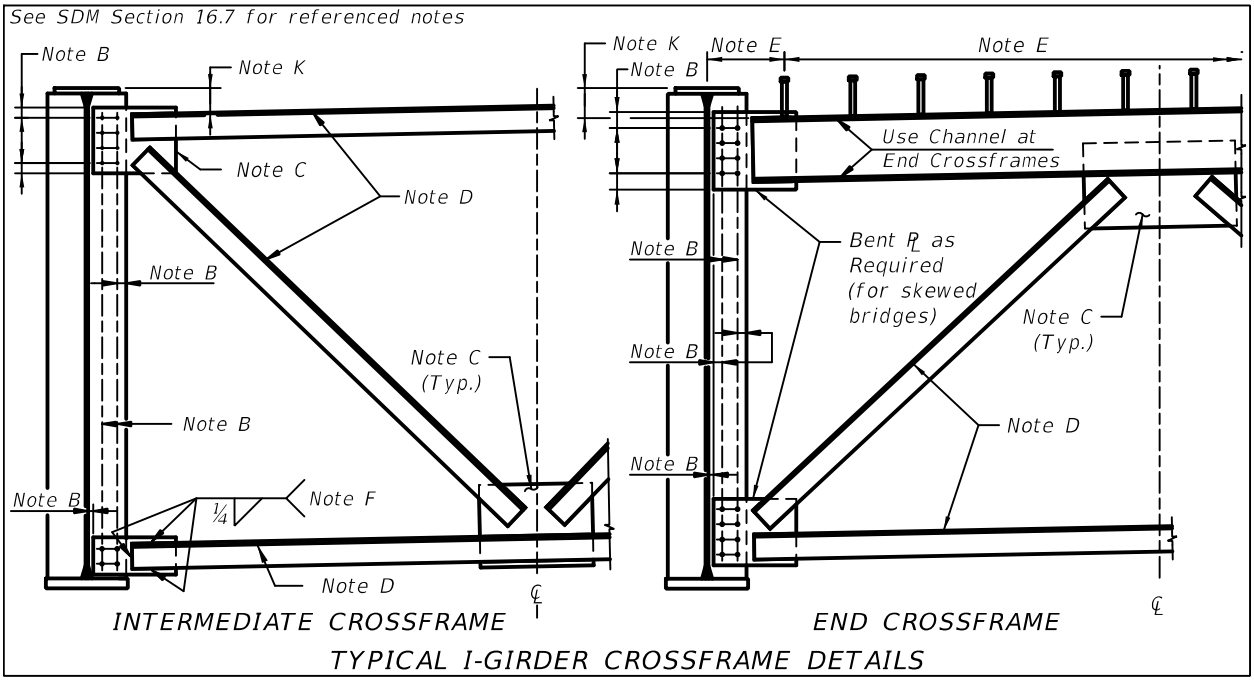

Figure 16.7-2 End Crossframe / Diaphragm Connection Details

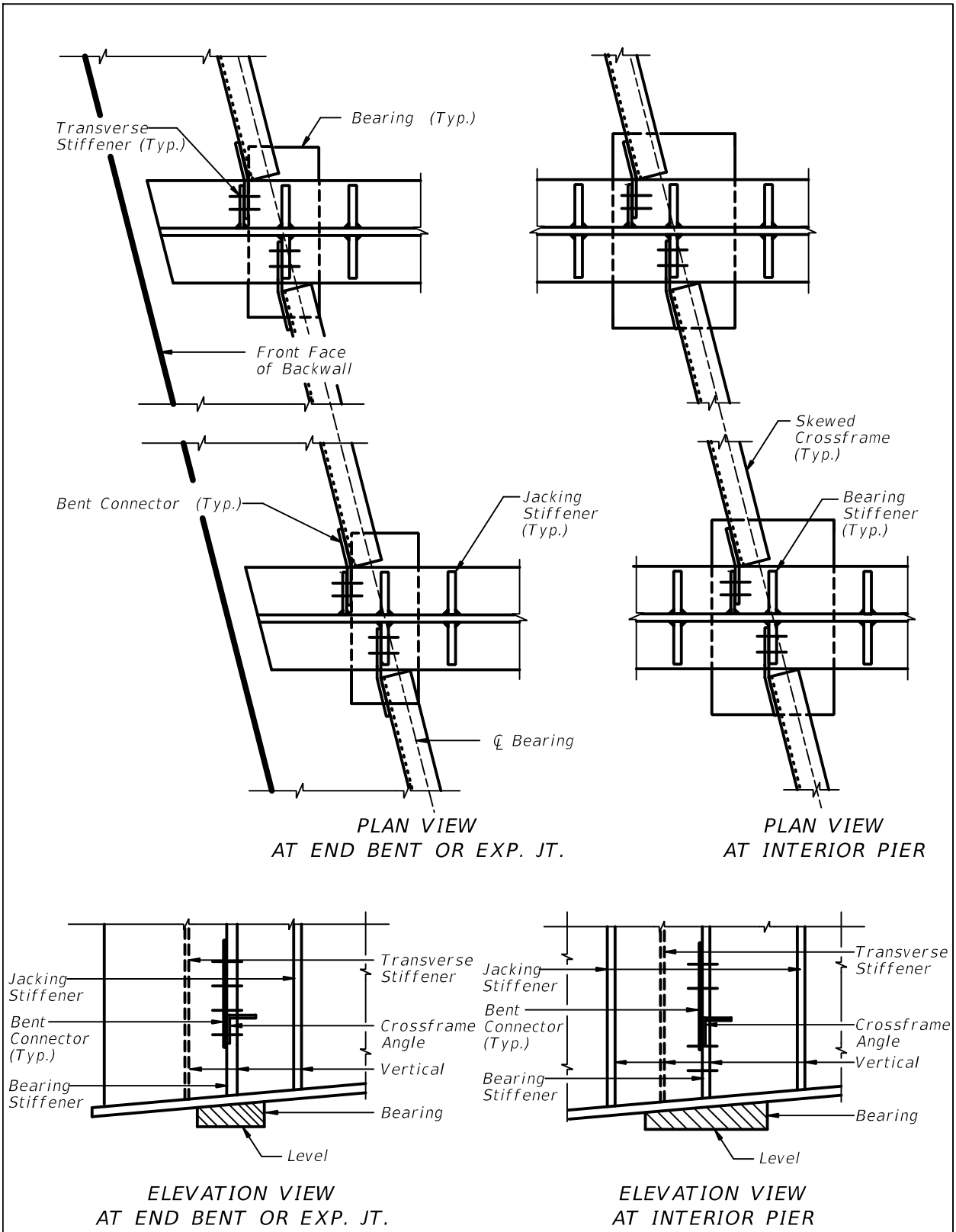

END CROSSFRAME / DIAPHRAGM CONNECTION DETAILS

16.8 CROSSFRAME & DIAPHRAGM DETAILS - BOX GIRDERS (Rev. 01/11)

Crossframe and Diaphragm Detail sheets should include details for fabrication and placement of internal crossframes and diaphragms in box girders. This includes details for internal crossframes, internal lateral bracing, end diaphragms, external diaphragms and external crossframes. At a minimum, include the following on these detail sheets (see Figure 16.8-1, Figure 16.8-2, Figure 16.8-3, Figure 16.8-4 and Figure 16.8-5):

A. Partial section of superstructure showing typical bay. Show at least one section each for all crossframes and diaphragms, internal and external.

B. Bolt layout and spacing dimensions. Maintain minimum edge distances taking tolerances into account. Detail bolt patterns normal to girder web.

C. Plate thickness for gusset plates.

D. Member sizes (angles, C-channels, WT-sections, etc.). Use standard shapes for all members. Show angles with horizontal leg on the upper side of member.

E. Shear connector spacing for end diaphragms. Be aware of spaces required to bolt-up external end crossframes.

F. Weld detail with dimensions. Weld termination details at all gusset and connection plates. Generally, ¼" fillet welds are preferable.

G. Top flange lateral bracing for box girders. The use of lateral gusset plates is permitted to aide bracing fit-up. Use fill plates where required to avoid conflict with formwork or diaphragm top flange. Include a plan view of lateral bracing connection details.

H. Tab plate details. Include weld sizes and termination details.

I. Details for temporary diaphragms.

J. Diaphragm details.

   1. Plate sizes.
   2. Location and sizes of stiffeners. Detail stiffeners normal to box bottom flange and vertical.
   3. Locations of access holes and utility holes.
   4. Cut out dimensions and connection details for longitudinal stiffeners.
   5. All applicable details listed above.

Figure 16.8-1 Steel Box Girder Cross Section Basic Geometry

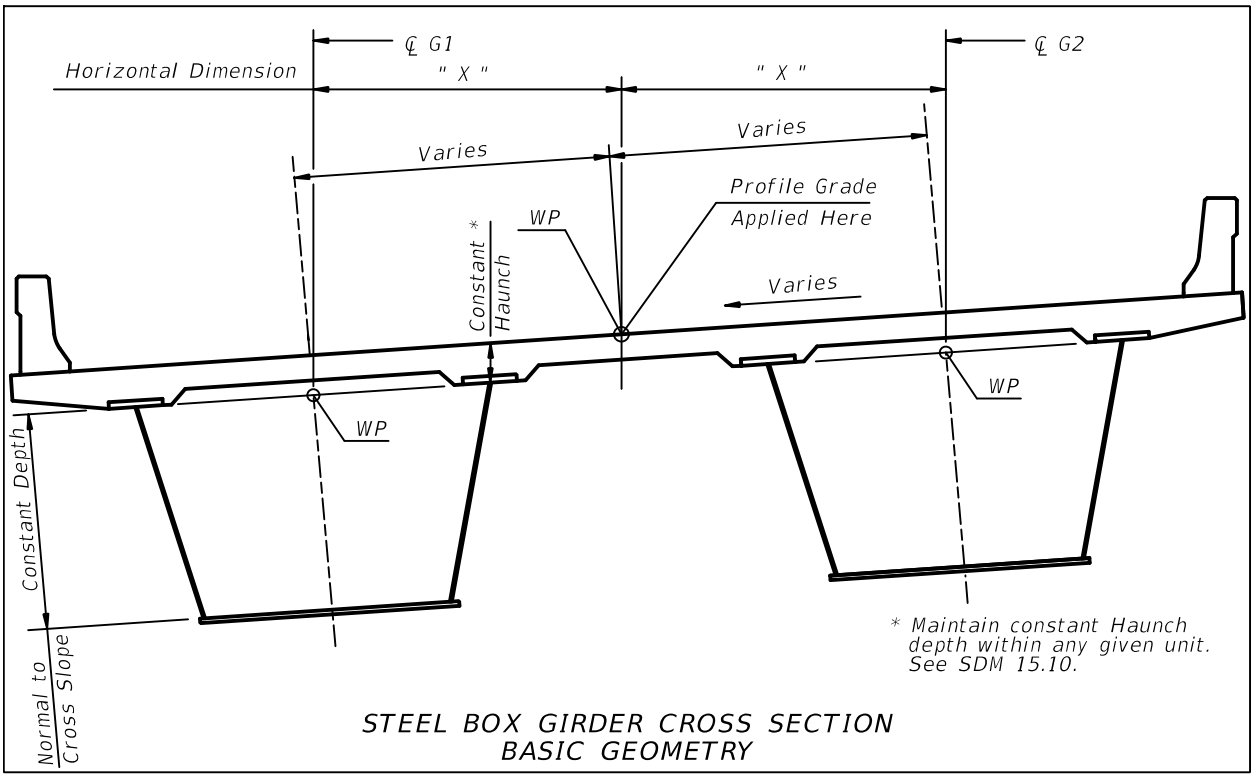

Figure 16.8-2 Steel Box Girder Pier Diaphragms

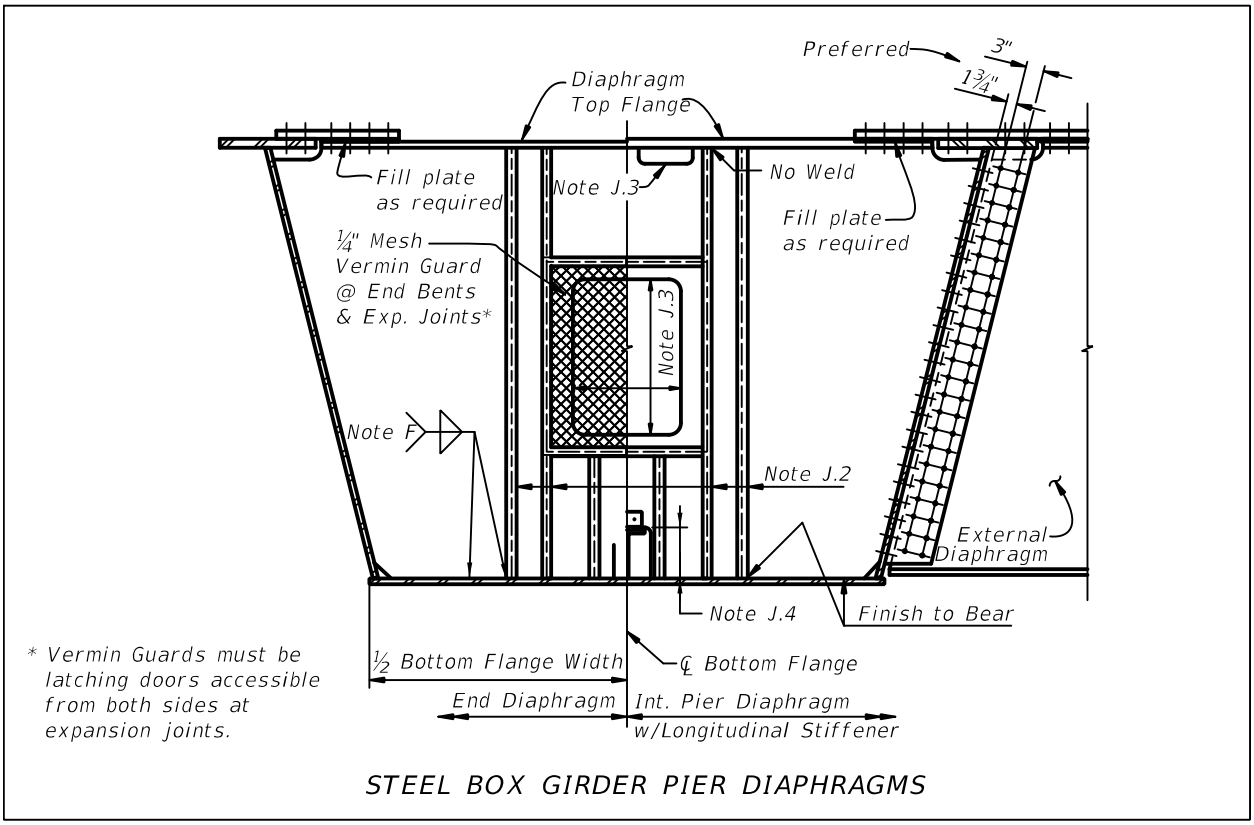

Figure 16.8-3 Steel Box Girder Internal Crossframe

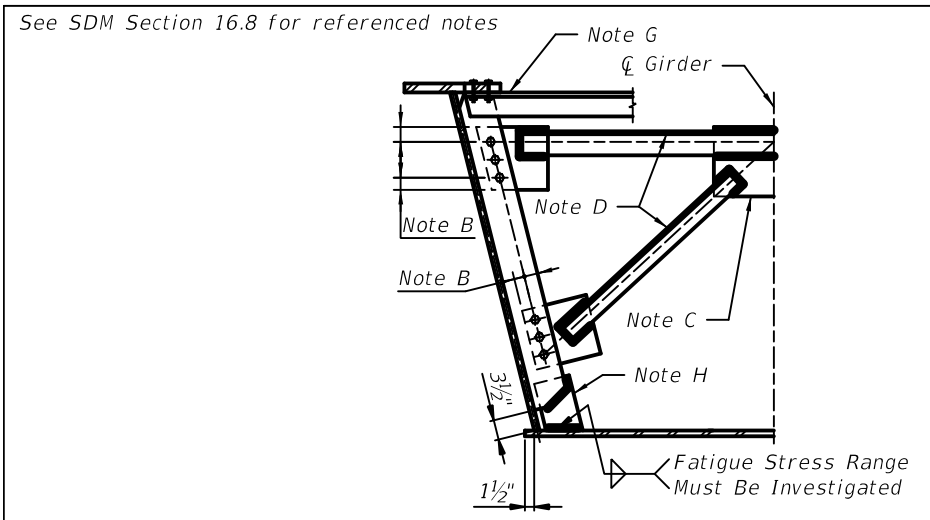

STEEL BOX GIRDER INTERNAL CROSSFRAME

Figure 16.8-4 Steel Box Girder Crossframe with Longitudinal Stiffener

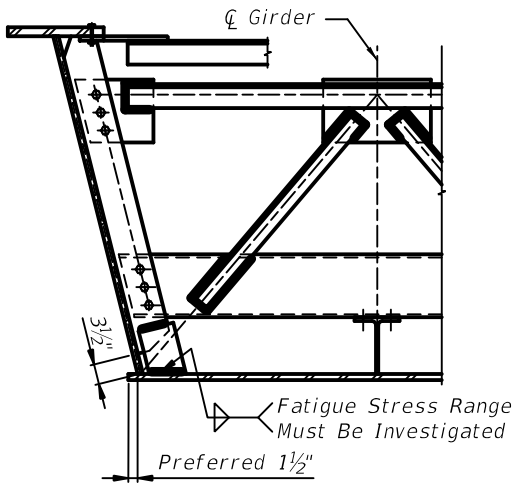

STEEL BOX GIRDER CROSSFRAME WITH LONGITUDINAL STIFFENER

Figure 16.8-5 Steel Box Girder Intermediate Diaphragm Connection

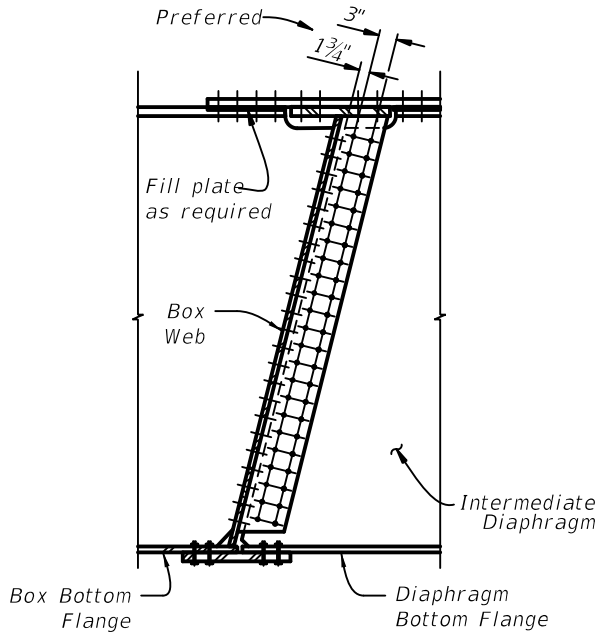

INTERMEDIATE PERMANENT EXTERNAL DIAPHRAGM CONNECTION TO BOTTOM FLANGE

16.9 GIRDER DEFLECTION AND CAMBER DIAGRAMS (Rev. 01/11)

Girder Deflection and Camber sheets are required for all steel superstructures. These sheets should provide sufficient geometric reference for girder fabrication and deck placement. For examples illustrating the content and format of completed Camber Diagram sheets, see the ***Structures Detailing Manual Examples***. Typically, camber and deflection ordinates are shown in tabular format. Show total dead load deflection along the centerline of the box for box girders, and net camber along the centerline of the girder for I-girders. At a minimum, include the following on the Girder Deflection and Camber sheet (see Figure 16.9-1 and Figure 16.9-2):

A. Line diagram showing a graphical representation of the following:
   1. Total camber including vertical curve camber*.
   2. Span number and length.
   3. Horizontal increment ordinate locations.
   4. Label centerline bearing.

B. Tabulated camber ordinates for the following:
   1. Steel deadload deflection.
   2. Non-Composite deadload deflection (deck, SIP forms, build-up, haunch).
   3. Composite dead load deflection (railings, utilities, soundwalls, wearing surface, traffic separators).
   4. Total deadload deflection.
   5. Vertical curve*. If not applicable, omit this row from the table.
   6. Total required camber including vertical curve camber*.

   * vertical curve ordinate not included for box girders.

C. Miscellaneous camber notes:

1. Indicate downward deflection as positive.
2. Indicate upward camber as positive.
3. Slab deadload deflection should be based on deck casting sequence. Include note in the plans that changes in casting sequence will require re-calculation of slab deadload deflections.

Figure 16.9-1 I-Girder Camber Diagram

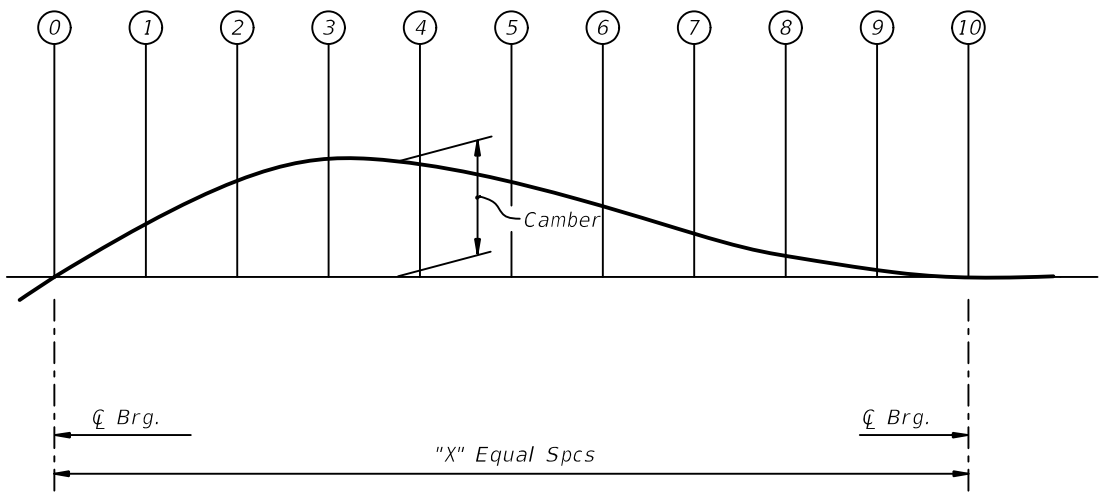

LINE		0	1	2	3	4	5	6	7	8	9	10
G1	STEEL DL	0										0
	CONCRETE DL	0										0
	COMPOSITE DL	0										0
	TOTAL DL	0										0
VERTICAL CURVE	VC	0										0
	REQUIRED CAMBER	0										0

Cambers can be given in fractions, decimal of a foot or decimal inches.
Upward camber is positive. Downward deflection is positive.

I-GIRDER CAMBER DIAGRAM

Figure 16.9-2 Box Girder DL Deflection Diagram

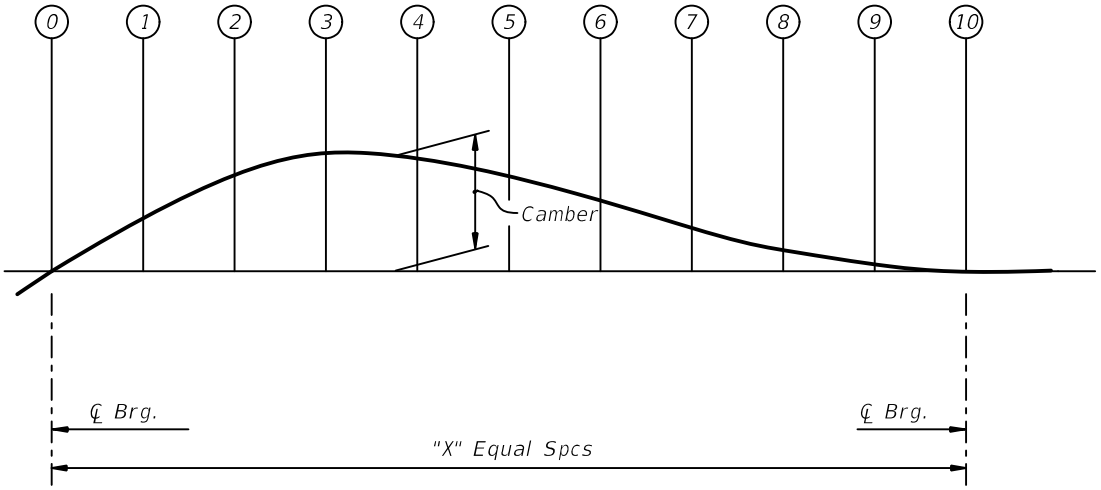

LINE		0	1	2	3	4	5	6	7	8	9	10
G1	STEEL DL	0										0
	CONCRETE DL	0										0
	COMPOSITE DL	0										0
	TOTAL DL	0										0

Cambers can be given in fractions, decimal of a foot or decimal inches.
Upward camber is positive. Downward deflection is positive.

BOX GIRDER DL DEFLECTION DIAGRAM

16.10 WELDS

A. Avoid using details that cause stress concentrations in the weld and a decrease in the basic allowable stress range.

B. It is the designer's responsibility to design the connections; however the detailer should be familiar with Table 6.6.1.2.3-1 and Figure 6.6.1.2.3-1 in ***LRFD***. This table indicates that welds cause reductions in allowable fatigue strength and the reductions are governed by the magnitude of discontinuities in the welds.

C. Avoid the following welds defined as Category E weld types in ***LRFD*** Table 6.6.1.2.3-1:

   1. Intersecting welds: Do not use this type detail.

   2. Longitudinal weld terminations: Plates on cover-plated beams should terminate at the ends of beams. Welds should be continuous. When attachments require longitudinal welds on beams or girders, refer to ***LRFD***.

D. Any detail, except as noted above, can be used provided it is properly accounted for in the design and details. The simplest detail consistent with the stress requirements will generally be the most desirable from the standpoint of design, fabrication and economics.

16.11 MISCELLANEOUS DETAILS (Rev. 01/11)

Steel girder details should be complete to provide sufficient information for fabrication and erection of the girders. These miscellaneous details can be shown on a separate sheet or incorporated in any of the previous sheets, as space permits. The following details are typical for most steel girder applications:

A. Transverse shear connector spacing detail (weld symbol not required in this detail as it is covered by Specification 502). See Figure 16.11-3.

B. Anchor bolt details.

C. Field splice detail. Include the following (see Figure 16.11-2):

   1. Plan view of both top and bottom flange. Include thickness and/or width transition detail. It is not necessary to transition top flange widths at field splices where the section changes since the top flange will not be visible.

   2. Section view.

   3. Elevation view.

   4. Plate sizes and thicknesses, including filler plates.

   5. Bolt layout and spacing. Provide dimension from top of web to uppermost row of bolts in the web splice. Maintain minimum edge distance requirements.

D. Stay-in-place form details. Detail forms inside box girders to avoid conflicts with the top flange lateral bracing system. See ***SDM*** Chapter 15 for typical SIP form details.

E. Box girder details including the following:

1. Access opening details.
2. Vermin guards.
3. Diaphragm access opening details.
4. Drain holes with screen covers. Drain holes should be a minimum of 5' from centerline pier or front face of backwall. See Figure 16.11-4.
5. Electrical access holes.
6. Longitudinal stiffener details. Detail longitudinal stiffener termination as shown. See Figure 16.11-1.

F. Details for shop splices. Show minimum distances to field splice, section change locations, nearest stiffeners, etc. Detail welds as full penetration welds. Specify welds are to be ground flush for exterior faces of fascia girder webs and all bottoms of top and bottom flanges. Welds on the tops of top and bottom flanges do not need to be ground flush. See Figure 16.11-5.

G. Details for closure pours when phased construction is required. Show a section through the closure pour bay detailing the Phase I bolt holes in the connector plates as slotted and Phase II bolt holes in the connector plates to be field drilled. Closure pours should be kept as close as possible to the two foot minimum. Center closure pours between adjacent girders. Avoid phasing where closure pours are over girders. See Figure 16.11-6.

Figure 16.11-1 Box Girder Bottom Flange Stiffener Transition and Termination Details

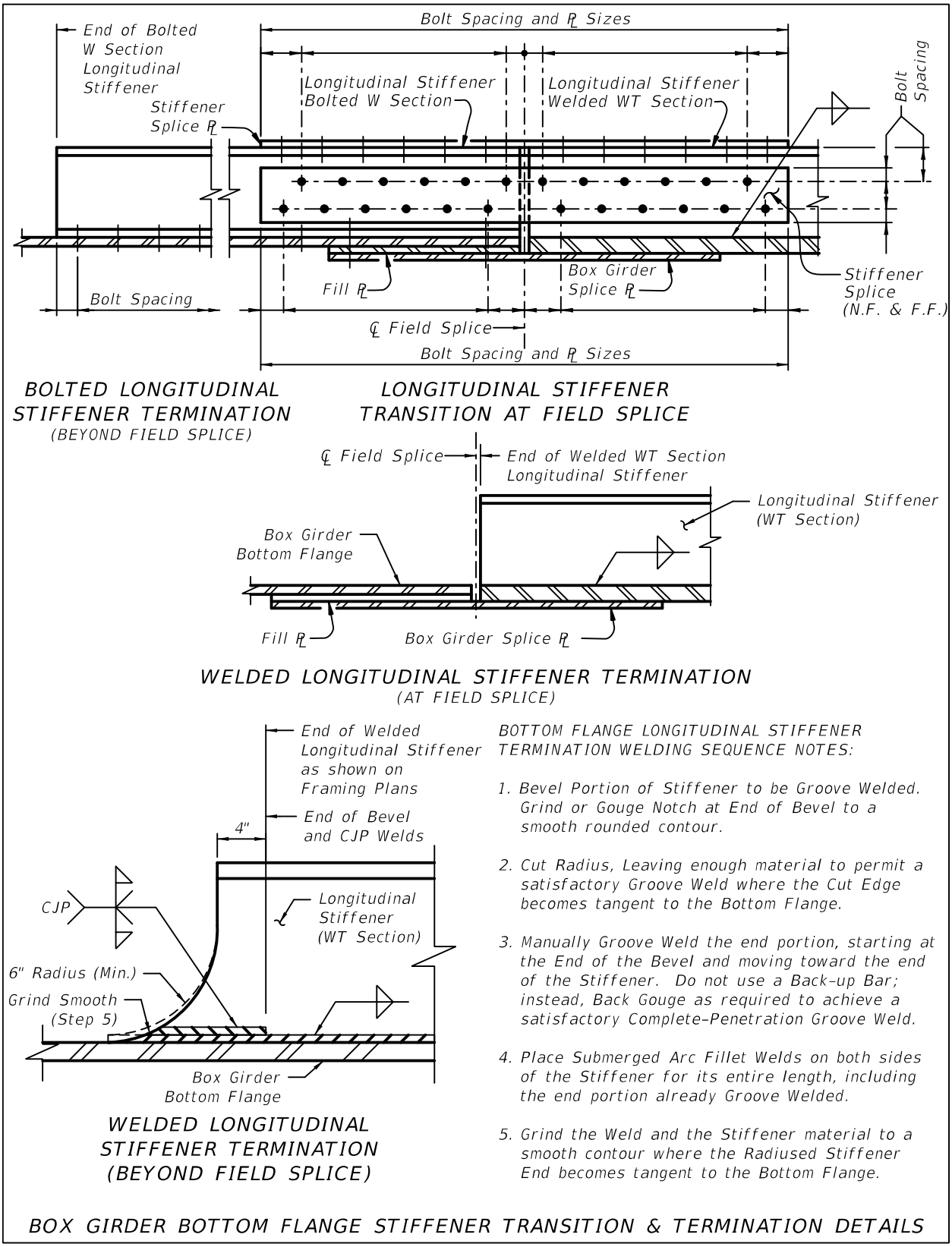

Figure 16.11-2 Web Splice Detail

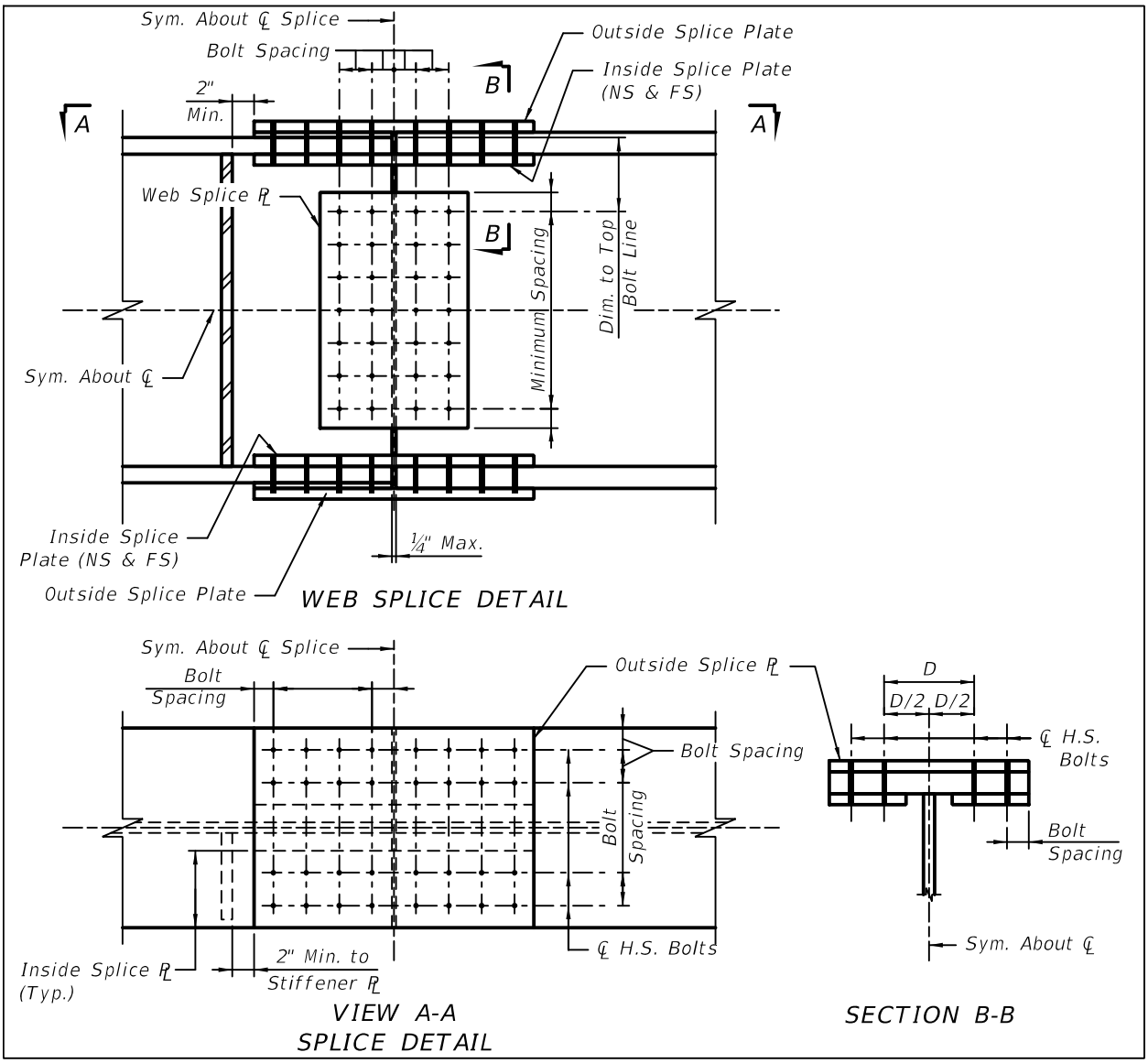

Figure 16.11-3 Top Flange Shear Connector Detail

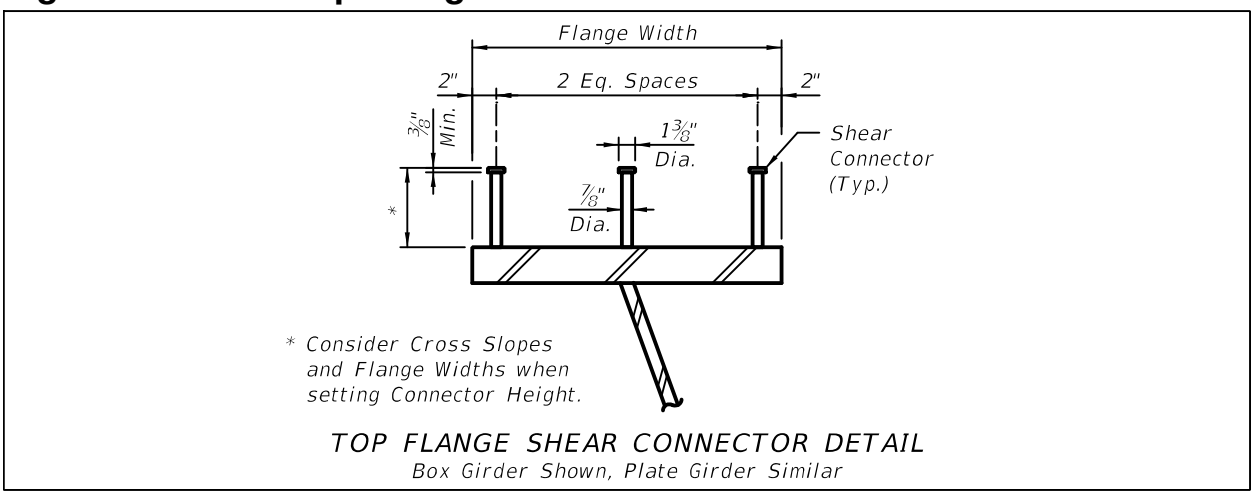

Figure 16.11-4 Box Girder Section with Drain Hole Detail

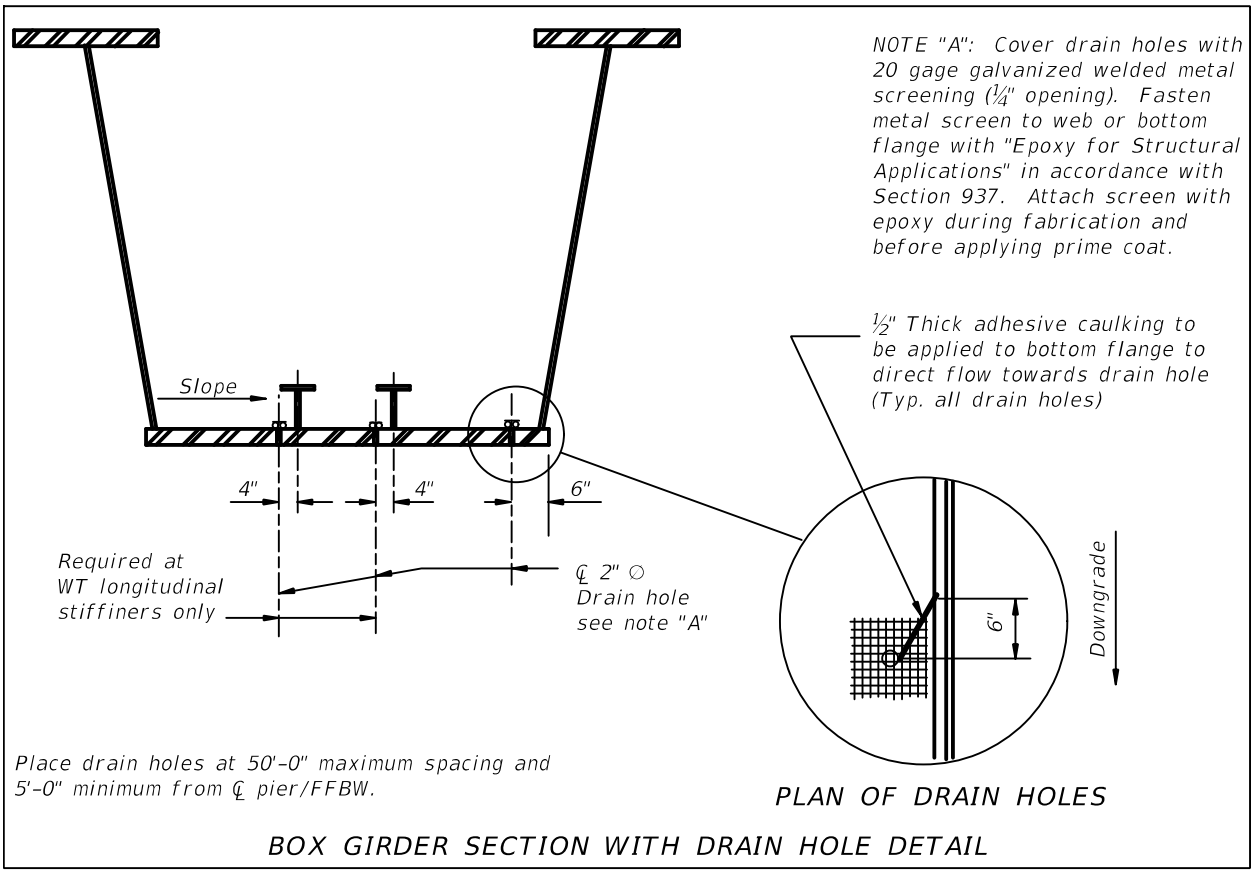

Figure 16.11-5 Shop Splice Details

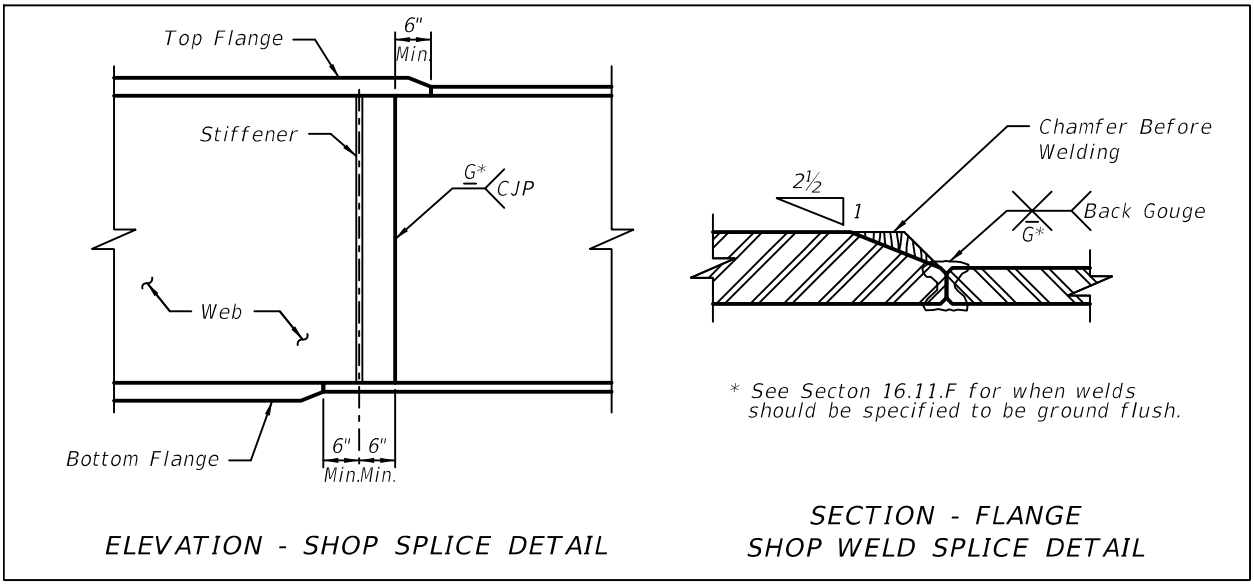

Figure 16.11-6 Phased Construction Steel Detail at Closure Pour

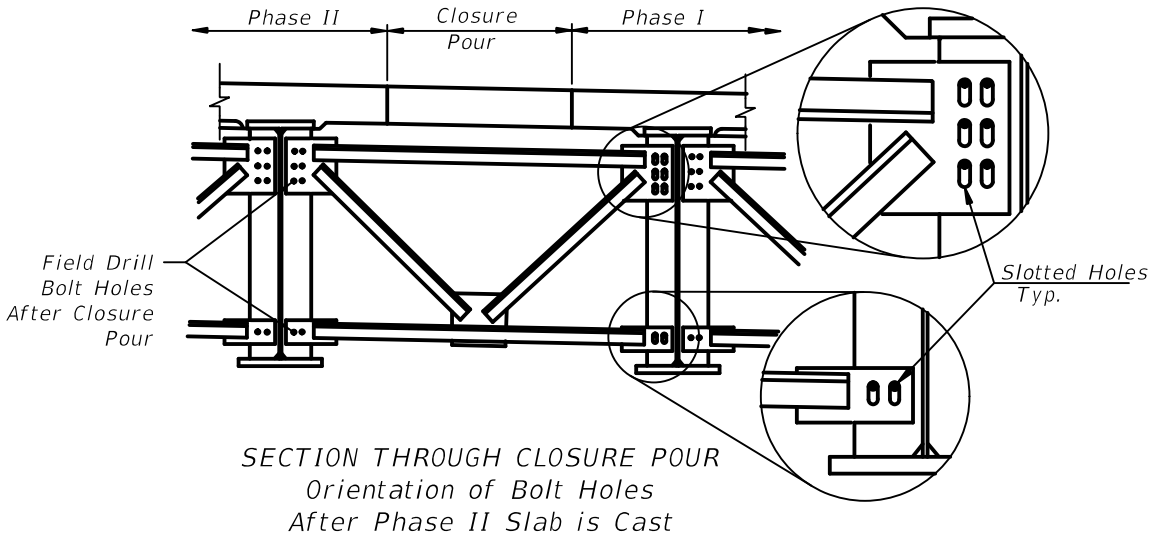

PHASED CONSTRUCTION STEEL DETAIL AT CLOSURE POUR

17 TYPICAL SECTION

17.1 GENERAL

A. The purpose of the Typical Section sheet is to show the dimensions for the bridge deck, beam spacing and roadway configuration. Reinforcement details belong on the Superstructure Section sheet(s).

B. The Typical Section sheet can be combined with the Pier Elevation sheet. This sheet should be titled Bridge Section sheet.

C. For an example illustrating the content and format of a completed Typical Section sheet, see the ***Structures Detailing Manual Examples***.

17.2 TYPICAL SECTION - DRAWING AND DETAILS

At a minimum, include the following in the Typical Section sheets:

A. Section of the bridge deck. Use a suitable scale for the drawing. If there are two bridges, show both sections. Break lines are allowed in the dimension and the drawing.

B. Right-of-way lines when bridge is being built on a new or shifted alignment. Show Temporary Construction Easement lines if applicable.

C. Station Line. Label PGL.

D. Dimensions for traffic railing widths, shoulder widths, lane widths, bike lane widths, sidewalks, median width and overall width. Include dimensioning of future lanes.

E. Existing bridge structure for widenings. Draw existing superstructure as dashed. Hatch or shade portions that are to be demolished.

F. Beam type, size and spacing. If spacing varies, indicate minimum and maximum dimensions. Reference appropriate ***Design Standard***.

G. Overhang distance. If overhang varies, indicate minimum and maximum dimensions.

H. Traffic Railing type. Reference the applicable ***Design Standard***. If more than one traffic railing is used (median, pedestrian, etc.) indicate each applicable ***Design Standard***.

I. Traffic Separator. Reference appropriate option in the ***Design Standards***.

J. Slab thickness.

K. Construction joints. Label construction phases consistently with the TCP and other sheets in the plan set.

L. Cross slope. If cross slope is in transition, show as "Varies".

M. Pier elevation. If pier elevation is combined with superstructure sheet, label sheet as Bridge Section.

18 ADA REQUIREMENTS

18.1 GENERAL

A. This chapter provides graphical representations of the preferred methods for compliance with the Americans with Disabilities Act (ADA) and Florida Accessibility Code. In general, special attention should be paid to sidewalks on bridges when:

   1. Bridge or bridge approach grades are greater than 5%.
   2. Drainage grates or scuppers are placed within the limits of the sidewalk.
   3. Expansion joints are placed within the limits of the sidewalk.
   4. Bridge cross slopes exceed 2%.

B. When required, include all details in the plans necessary to build the ramps and handrails based on accessibility code compliance.

C. See ***ADA Standards for Transportation Facilities*** for other facilities not covered in this chapter.

D. These guidelines are meant to apply to a broad range of situations. For situations where these guidelines will be difficult to implement, consult the DSDE for guidance.

18.2 RAMPS AND HANDRAILS - GRADES GREATER THAN 5%

Sidewalks on bridges must comply with ADA and Florida Accessibility Code. The following details are intended to address sidewalks with grades steeper than 5% and/or cross slopes greater than 2%. The following guidelines apply to sidewalks on bridges that meet these criteria:

A. For grades greater than 5%, ramps will be required. Provide landings and maximum grades as outlined in the ***ADA Standards for Transportation Facilities*** and the details shown in Figure 18.2-1.

B. Where ramps are required, handrails are required on both sides of the sidewalk. Handrails should be placed at a constant distance from the landing/ramp surface. For aesthetic purposes, the pedestrian/traffic railing should be constant throughout the bridge. Modify the height of the pedestrian/traffic railing to hide the ADA handrail. See Figure 18.2-2 and Figure 18.2-3.

C. Handrail assemblies, brackets and attachments are required to withstand a minimum point load of 250 pounds applied vertically down and horizontally but not simultaneously at the top of the rail. Additionally, the rail system design must be in compliance with current ***ADA*** requirements and all applicable state and local authorities.

D. Show rails continuous over a minimum of three wall brackets. Space splices at 40'-0" centers maximum. Locate the center of a splice near the edge of a wall bracket.

E. Indicate with plan notes that the Contractor is required to submit the following to the Engineer for approval prior to fabrication:

1. Shop drawings with complete details including rail bracket and expansion joint locations. Indicate component details, materials, finishes, connections, and joining methods and the relationship to the adjoining work.
2. Summary of the materials for the proposed rail system, including mill analysis with certification by the producer that the parts are the alloys specified and meet the specifications called for. See ***Specification*** 965.
3. The manufacturer's engineering design and data for the rail system and components signed and sealed by a Professional Engineer registered in the state of Florida.
4. The manufacturer's installation instructions and product data.

F. Materials and Finishes: The following materials and finishes requirements should be indicated on the plans:

1. Rails and splice assemblies are to be fabricated from extruded aluminum pipe, Alloy 6061-T6 or 6063-T52 ASTM B 221. Provide Schedule 40 rails with nominal size of 1½ inches, 0.145 minimum wall thickness with a mill finish.
2. Provide wall brackets of extruded aluminum alloy6061-T6 or 6063-T52 ASTM B 221 with a mill finish.
3. When directed by the DSDE, galvanized steel may be substituted for aluminum pipe and wall brackets.
4. Provide mechanical fasteners of the type and size required by the manufacturer's specification and design calculations.
   a. Provide anchor bolts for the brackets in accordance with ASTM A36 or ASTM F1554, Grade 36. Anchor bolts, nuts and washers must be hot-dipped in accordance with ***Specification*** 962.
   b. Use stainless steel, ASTM F-593, Alloy Group 2 (316) for all fasteners and washers used at the splice assemblies and to mount the rails to the brackets.

G. Erect rails parallel to and 2'-10" above the top of pedestrian ramp as shown in Figure 18.2-3.

Figure 18.2-1 Maximum Slopes and Landing Spacing and Dimensions for Ramps

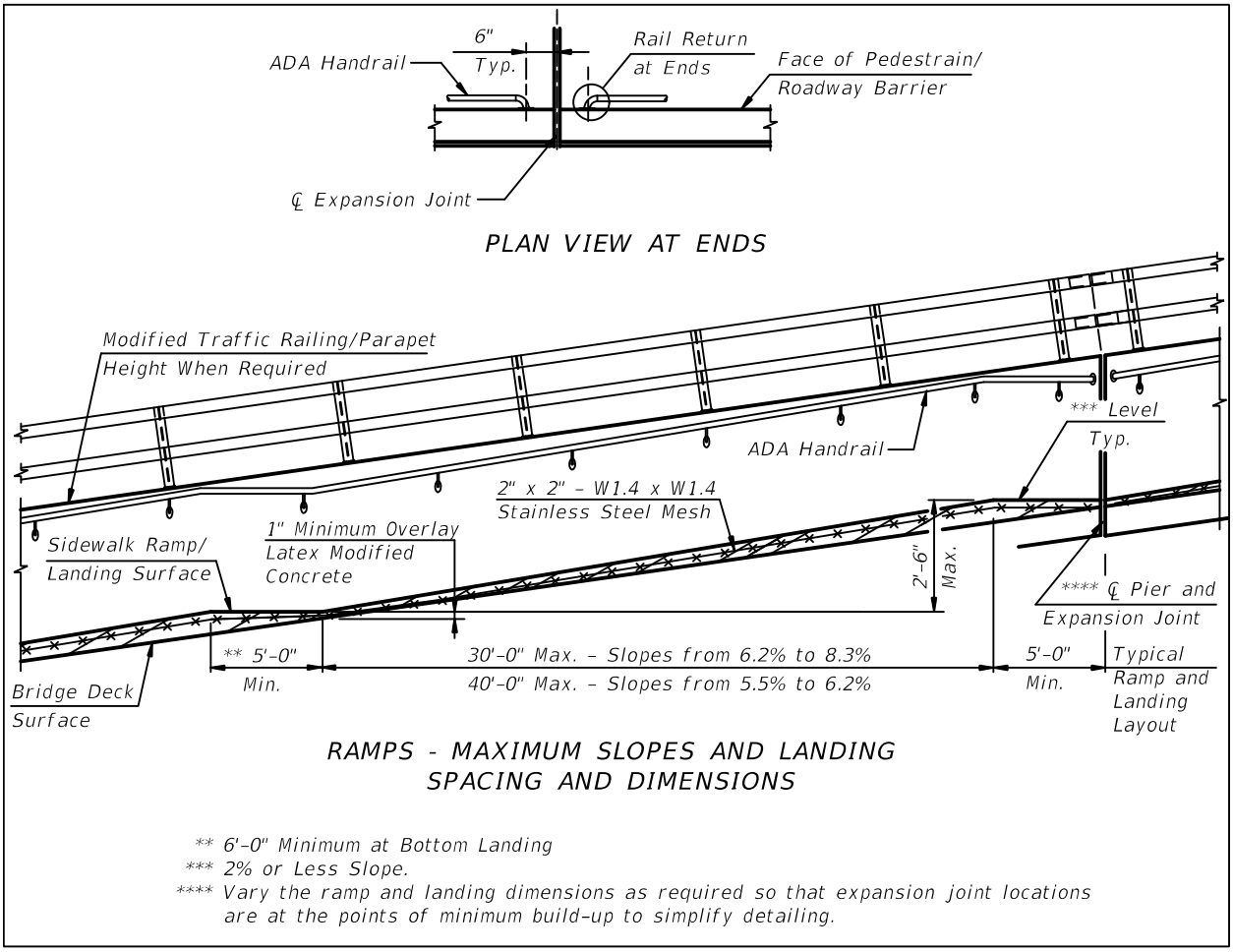

** 6'-0" Minimum at Bottom Landing
*** 2% or Less Slope.
**** Vary the ramp and landing dimensions as required so that expansion joint locations are at the points of minimum build-up to simplify detailing.

Figure 18.2-2 ADA Handrail Detail

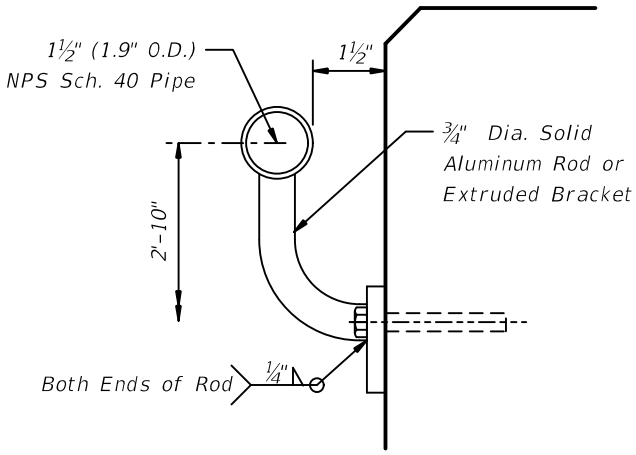

RAMPS

ADA ramps, landings and ADA handrails shall be provided within the sidewalk limits where bridge and bridge approaches have grades greater than 5%.

ADA handrails are required on both sides of the sidewalk in areas where ramps are required. The ADA handrails shall be placed a constant distance from the landing/ramp surface. It is aesthetically desirable to maintain a constant height pedestrian/roadway barrier for the full bridge length. The height of the pedestrian/roadway barrier should be sufficient to hide the ADA handrail.

A minimum clear distance of 5'-0" between ADA handrails shall be provided.

Figure 18.2-3 Bridge Section At Sidewalk With 32" "F" Shape Barrier (Modified)

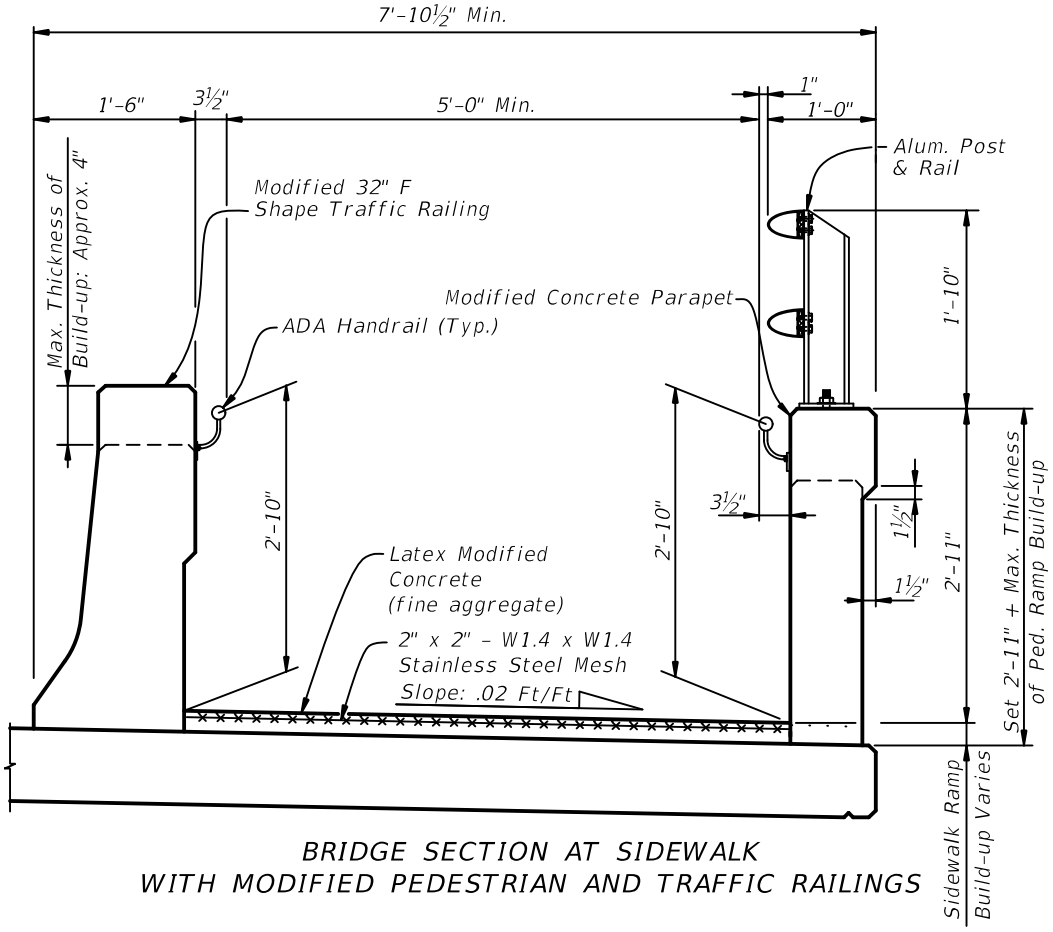

BRIDGE SECTION AT SIDEWALK
WITH MODIFIED PEDESTRIAN AND TRAFFIC RAILINGS

SIDEWALK RAMP BUILD-UP NOTES

1. Sand-blast or water-blast deck surface within limits of the sidewalk.
2. Remove all loose concrete and laitance in accordance with the manufacturer's recommendations.
3. Apply an approved epoxy bonding agent to the exposed concrete surface.
4. Overlay with latex modified concrete to the dimensions indicated for the special pedestrian ramp and landings.
5. Finish deck surface in accordance with Section 522.

18.3 DRAINAGE GRATES OR SCUPPERS

Drainage grates or scuppers that lie within the limits of the sidewalk are required to conform to ***ADA Standards for Transportation Facilities***. At a minimum, openings in gratings are to be no more than ½" wide in one direction. For surface requirements, see Figure 18.3-1.

Figure 18.3-1 ADA Surface Requirements

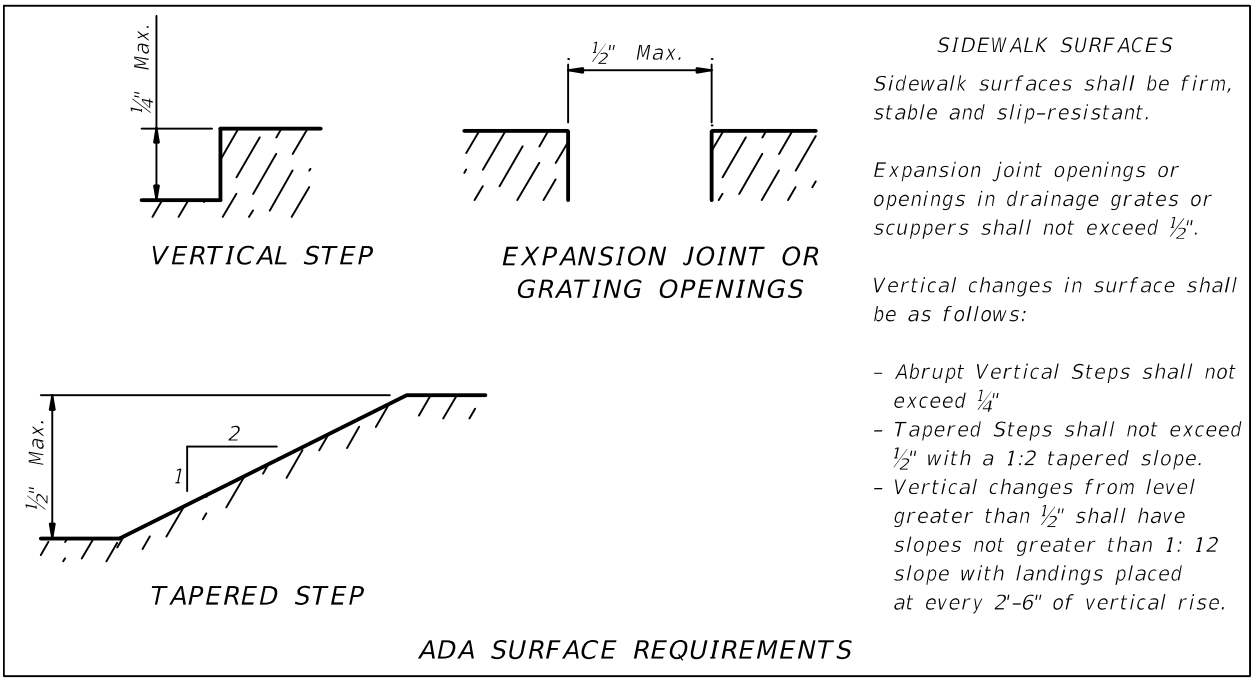

18.4 EXPANSION JOINTS ON BRIDGES

Expansion joints on bridges with sidewalks are addressed in ***Design Standard*** 21100 (Strip Seal Joints) and 21110 (Poured Joint with Backer Rod). Similar methods are required for bridges with large joints such as modular joints or finger joints. See Figure 18.3-1 for additional surface requirements.

18.5 CROSS SLOPES GREATER THAN 2%

The maximum cross slope for sidewalks on bridges is 2%. For bridges with a cross slope greater than 2%, the sidewalk must be modified to be in compliance. This can be achieved either by using a tapered build-up in the sidewalk portion of the bridge or by providing a change in cross slope at the gutterline. See Figure 18.5-1, Figure 18.5-2 and Figure 18.5-3.

Figure 18.5-1 Section at Sidewalk With Bridge Cross Slope Greater Than 2% (1 of 3)

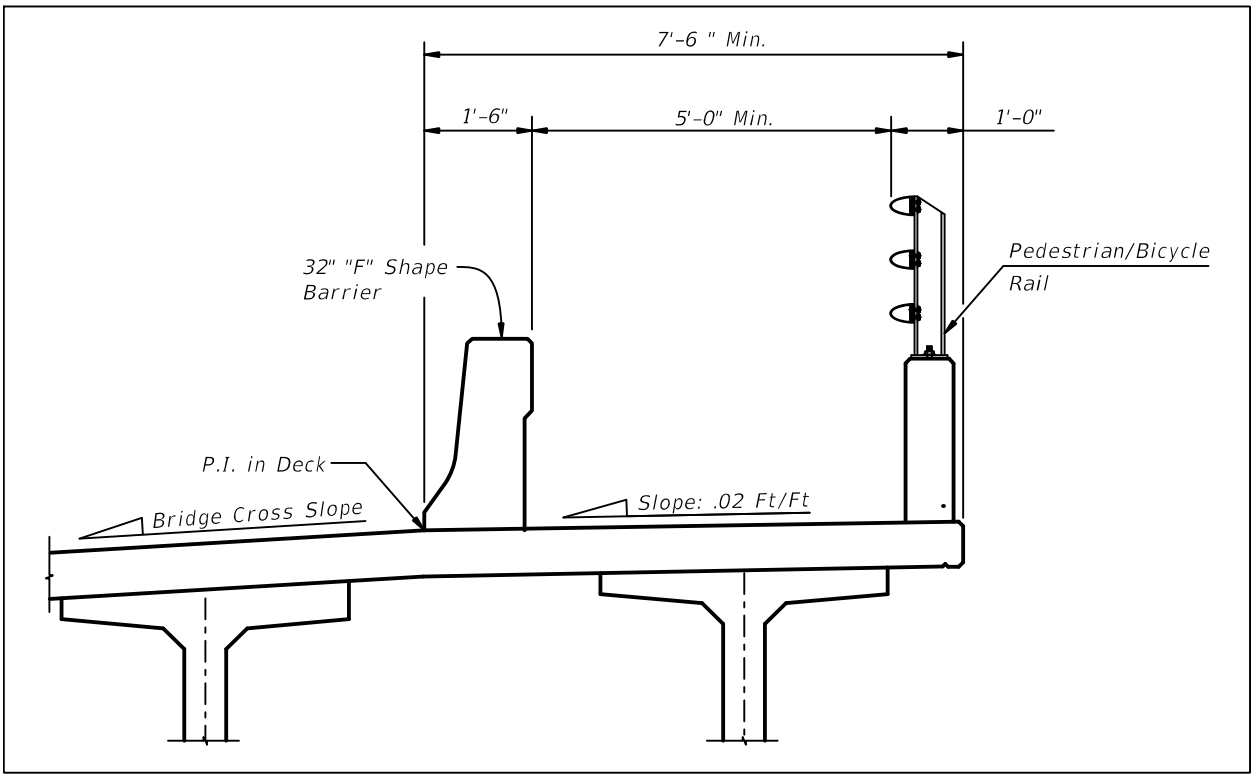

Figure 18.5-2 Section at Sidewalk With Bridge Cross Slope Greater Than 2% (2 of 3)

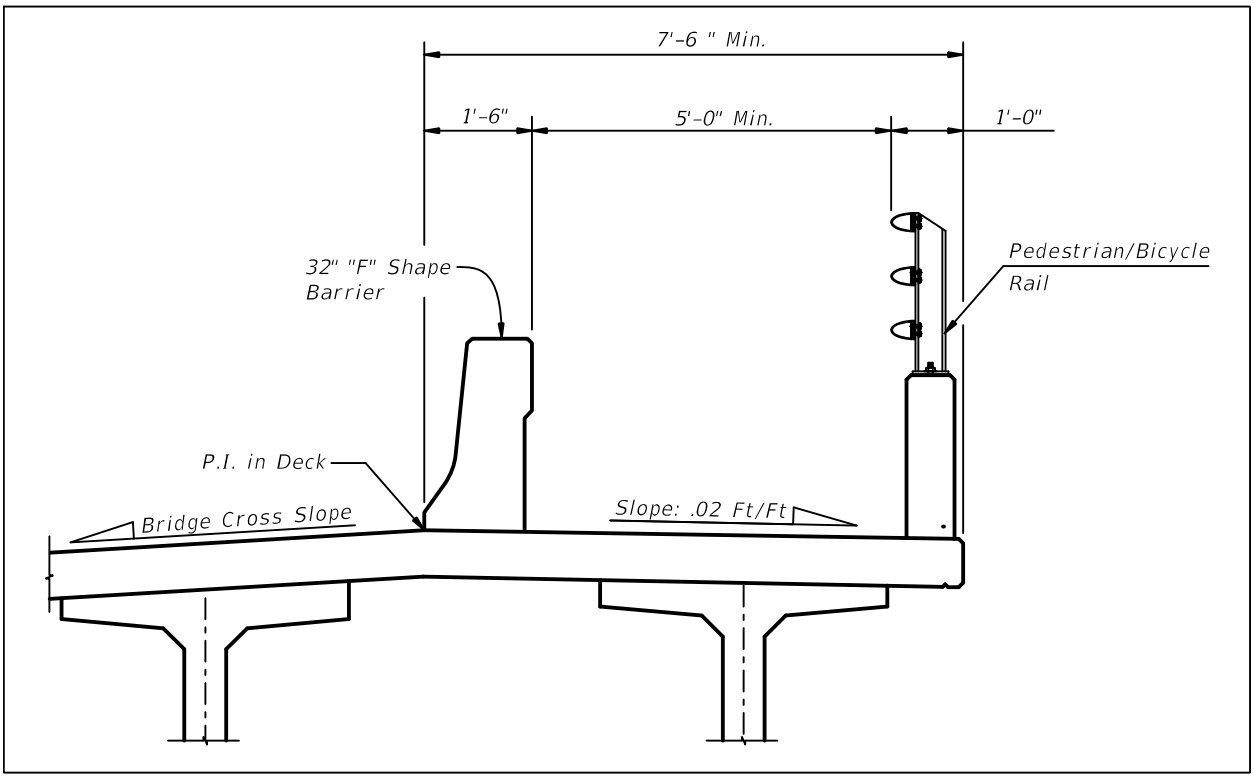

Figure 18.5-3 Section at Sidewalk With Bridge Cross Slope Greater Than 2% (3 of 3)

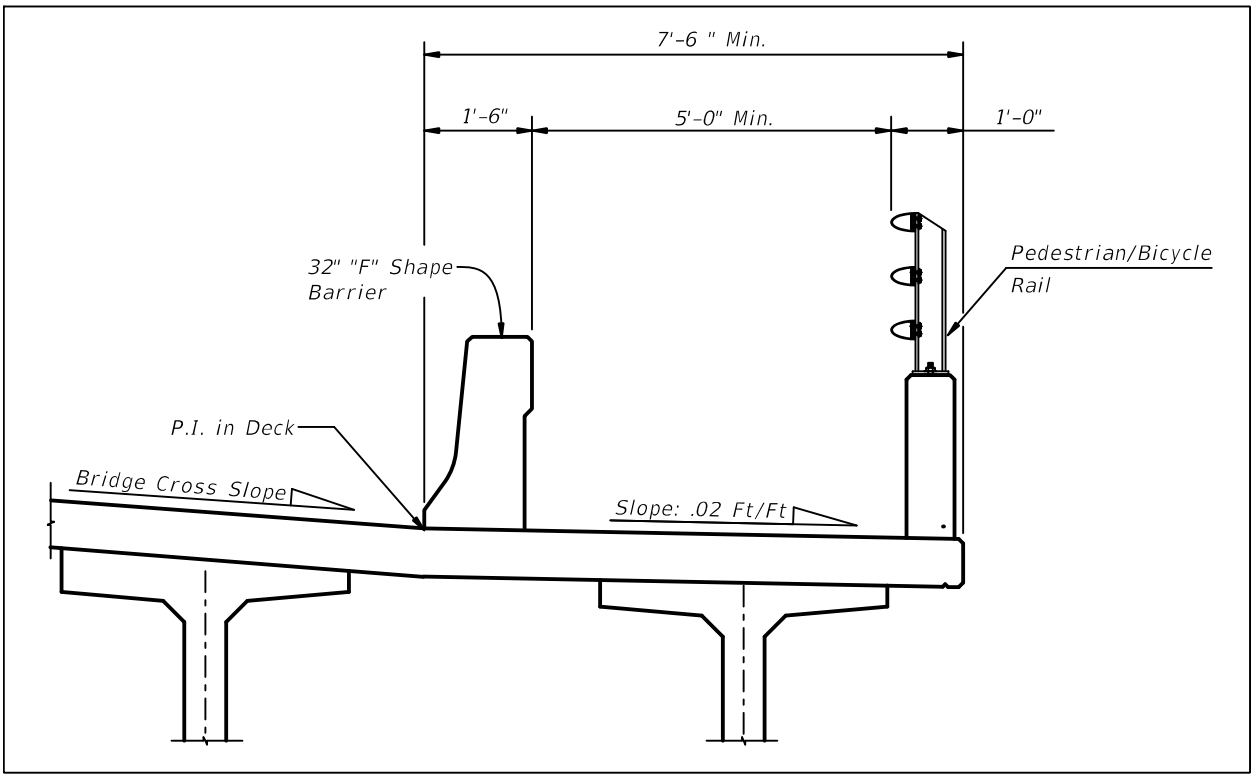

19 RETAINING WALLS (Rev. 01/11)

19.1 General

A. Wall drawings will include wall control drawings, wall details, data tables and other pertinent information required to layout and construct the retaining walls. These guidelines are applicable to permanent and temporary, cast in place and precast retaining walls. Wingwalls and cofferdams are not covered in this chapter.

B. Wall type should be determined during the BDR phase for accurate cost estimates. Wall type selection is based on wall height, wall settlement, durability factors and environmental conditions. To determine which FDOT wall types are applicable for a specific location, see the Permanent Retaining Wall Selection Flowchart in ***SDG*** 3.12.

C. See ***PPM*** Volume 1, Chapter 26 for phase submittal requirements.

D. For examples illustrating the content and format of completed Wall sheets, see the ***Structures Detailing Manual Examples***.

E. For requirements related to the design of walls, see ***SDG*** Chapter 3.

F. See ***PPM*** Volume 1, Chapter 30 for plan content requirements when full design details **are** required to be shown in the plans, e.g. for non-proprietary walls and select proprietary walls.

G. See ***PPM*** Volume 1, Chapter 30 for plan content requirements when full design details **are not** required to be shown in the plans, e.g. for most proprietary walls.

H. For projects with multiple walls or complex wall geometry, include a comprehensive plan view layout. Use a scale appropriate to encompass the entire project or enough to convey relative wall locations, including all temporary and permanent MSE and non-MSE wall systems labeled within a single sheet.

19.2 Wall Control Drawings

Wall control drawings are required to depict the location and geometrics of the wall layout. For walls listed on the Qualified Products List (QPL), project specific wall shop drawings will be required and created based on information shown in the wall control drawings. Wall control drawings will consist, at a minimum, of general notes, plan views, elevation views and details. Wall control drawings are required for all retaining wall types with the exception of non-critical temporary sheet pile walls. See ***SDM*** 19.7 for critical temporary wall definition. Wall type should be discussed and determined in the Bridge Development Report. Preliminary wall control drawings must be submitted with the Bridge Development Report for temporary critical walls and 30% plans for all other walls.

19.2.1 Wall Control Drawings - Plan Views

Wall plan views contain many callouts for stations and offsets. Provide station and offsets relative to the front face of the retaining wall. At a minimum, the wall control drawing plan views should include the following:

A. Existing features such as roads, drainage, utilities, fences.

B. Proposed drainage structures, piping and utilities. Be aware of the Department's policy on placing utilities within retained embankment. See the Utilities Accommodation Manual. Also see the ***Storm Drain Handbook*** and ***SDM*** Chapter 22 for policy regarding drainage structures within retaining wall embankment.

C. Sloped embankments. Indicate direction of slope and toe of slope. Indicate the slope in the following format: V:H.

D. Station Line with horizontal curve data. Label station line and indicate direction of stationing.

E. All begin and end wall locations. Begin wall locations should be at left side of the developed elevations and end wall stations should be shown on the right side of developed elevations. See Figure 19.2.1-1.

Figure 19.2.1-1 Typical Wall Naming Convention

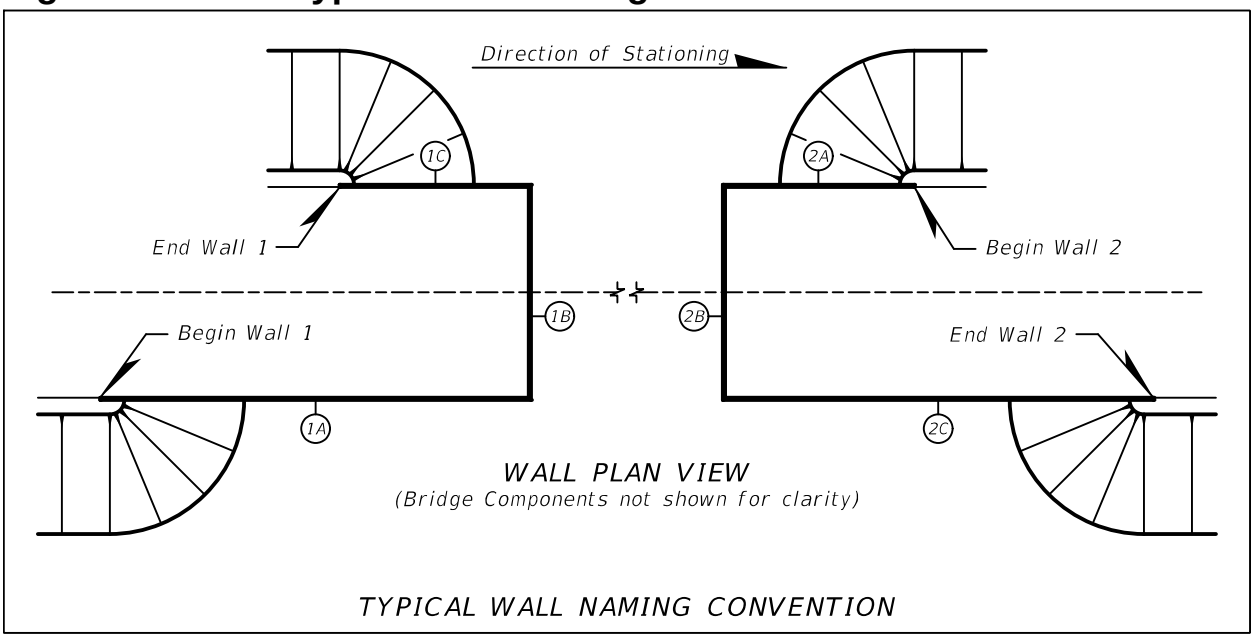

F. Station and offsets for all wall corners, PC and PT stations and any other changes in wall alignment.

G. All PC and PT stations for wall geometry. Indicate radius of curvature. This data may be different from the horizontal curve data of the Station Line.

H. Front face of retaining wall.

I. Stations for adjacent bridge features (FFBW, Begin/End Approach, etc.).

J. Wall names. Establish a wall naming convention for projects with multiple walls. Designate wrap-around walls with a single name using suffixes for wall segments (e.g., W-1a, Wall 1a, etc.).

K. Right-of-way lines. Include temporary construction easements.

L. Riprap, slope pavement or toe of slope limits.

M. North arrow. Show in upper right corner.

N. Matchlines. Clearly label matchlines with appropriate stationing.

O. Boring locations.

P. Berm dimensions. See Figure 19.6-4 for minimum berm dimensions.

Q. Light pole pilaster, sign and signal supports station and offset.

R. Architectural feature foundations (e.g., towers, etc.).

S. Location of section views.

T. Location of sign structures and lights. Indicate applicable Design Standard for wall pilaster.

U. Phase construction limits. Develop details where necessary. Specify the appropriate joint type for adjacent phases, i.e. slip joint for permanent MSE walls, construction or expansion joint for CIP walls, etc.

V. For additional wall control drawing requirements based on wall type, see ***SDM*** 19.5 thru ***SDM*** 19.8.

19.2.2 Wall Control Drawings - Elevation Views

Elevation views for wall control drawings should be developed, showing contiguous faces of the wall in a single plane, regardless of curvature or corners. Elevation views should always be oriented so that they show the front face of the retaining wall. At a minimum, elevation views for wall control drawings should include the following:

A. Stationing with elevations shown at the spacings below and at begin/end wall stations and at all wall corners, PC and PT stations and any other changes in wall alignment. More frequent elevations may be required. Tabulate if necessary. Include the elevations at the following locations:

   1. Proposed ground line at 50 foot maximum spacings.
   2. Existing ground line at 100 foot maximum spacings.
   3. Top of footing or leveling pad elevation at each step.
   4. Top of coping or wall at 50 foot maximum spacings.
   5. At slope breaks in top of wall or coping.

B. Show the following:

   1. Proposed ground line (shown as solid).
   2. Existing ground line (shown as dashed).
   3. Top of footing or leveling pad elevation.
   4. Top and bottom of coping.
   5. Top of traffic railing/sound wall and transitions. Indicate the applicable traffic railing Design Standard.

6. Wall penetrations (station, offset, invert elevation).
7. Light pole pilaster locations.
8. Sign and signal locations.
9. Vertical scale (on both sides).
10. Design scour depth.
11. Existing utilities and proposed drainage structures and piping. Indicate disposition of adjacent utilities (e.g., abandon in place, relocate, to remain, etc.).
12. Water table. Include bid item notes stating that dewatering may be necessary and that cost of dewatering shall be incidental to the cost of the wall.

C. For additional wall control drawing requirements based on wall type, see ***SDM*** 19.5 thru ***SDM*** 19.8.

19.2.3 Wall Control Drawings - General Notes and Details

Project specific wall details should be developed and shown in the sheets ahead of the wall plan and elevation sheets. The details that are required to be shown in the contract plans vary by wall type. Details for walls listed on the QPL will be fully developed in shop drawings. Include the following in the retaining wall General Notes sheets:

A. Section through end bent showing tie-in dimensions between end bent and retaining wall.

B. Section through wall showing gutters, ditches, copings, limits of wall volume (reinforced zone for MSE walls), leveling pad, footing and other features necessary to construct the wall or generate wall shop drawings.

C. Elevation view showing elevations of the cheekwall/coping/top of wall at the end bent. Details should show the tie-in between end bent and retaining wall.

D. Quantity block showing quantity of concrete, reinforcing steel, traffic railing and square footage of wall. See the ***Basis of Estimates*** for appropriate pay item, quantity unit and accuracy which vary depending on wall type.

E. Isolation details from architectural features, nearby footings, culverts and other potential hardpoints to account for different settlements between the structure(s) and the wall.

F. With the exception of gravity walls, walls associated with Design Standards will have data tables in the General Notes and Details sheet(s). Data table cells can be found in the Structures Bar Menu. See the ***Instructions for Design Standards (IDS)*** for instructions on filling these data tables.

G. A note stating that the locations of utilities shown on the wall plans are approximate. Refer to the Utility Adjustment sheets for details.

H. Material requirements.

19.3 Cast in Place Cantilever Walls

When cast in place cantilever walls are specified in the plans, use the Department's ***LRFD Retaining Wall Program*** for analysis and design of cantilever retaining walls. Output from this program is used to fill-out the wall data table. Cast in place retaining walls should be designed in accordance with ***SDG*** 3.13 and ***Design Standard*** Index 6010. Include the Retaining Wall Data Table in the plans. See the ***Instructions for Design Standards (IDS)*** for instructions on filling these data tables and other plan content requirements in addition to ***SDM*** 19.2.

19.4 Gravity Walls

When cast in place gravity walls are specified in the plans, use ***Design Standard*** Index 6011. Follow the applicable minimum plan content requirements outlined in ***SDM*** 19.2 above and the ***Instructions for Design Standards (IDS)***.

19.5 Permanent Sheet Pile Walls

Permanent sheet pile walls can be either steel or concrete, tied back or cantilever. Use the appropriate sheet pile wall data table cell found in the Structures Bar Menu.

19.5.1 Concrete Sheet Pile Walls

When concrete sheet pile walls are specified in the plans, develop wall control drawings and details for a concrete wall cap. Concrete sheet pile walls in excess of 15 feet high are typically anchored to a dead man, anchor pile or soil anchor. Work concrete sheet pile wall control drawings with ***Design Standard*** Index 6040 series. In addition to the plans content requirements shown in the ***Instructions for Design Standards (IDS)*** and in ***SDM*** 19.2 above, include the following:

A. Project specific concrete wall cap. See Figure 19.5.1-1. If a wall-mounted barrier is specified, indicate the applicable Design Standard.

Figure 19.5.1-1 Section Through Sheet Pile Wall Cap

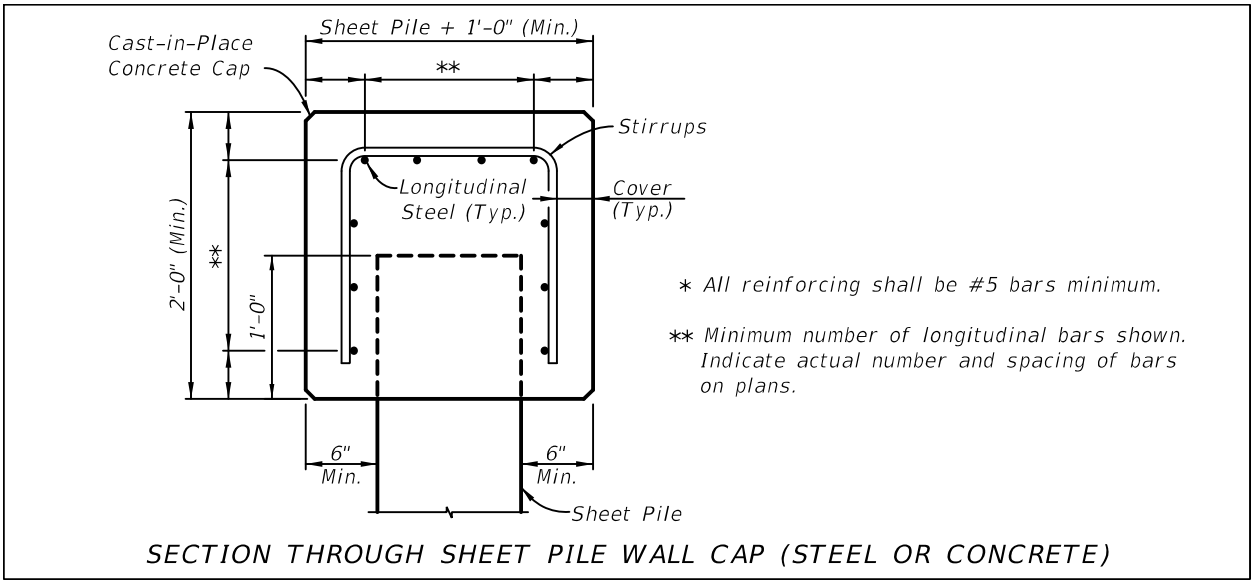

B. Indicate starter pile and pile type and orientation. Refer to ***Design Standard*** Index 6040 for applicable pile types.

C. Tie-back locations if wall is tied back. Include anchor rod, deadman, anchor pile or soil nail details as necessary. In cases where the anchor rods may be deformed by settlement of the overlaying embankment, or where anchor rods are buried more than a third of the wall height, isolate the anchor rod its entire length. See Figure 19.5.1-2.

Figure 19.5.1-2 Anchor Rod Detail

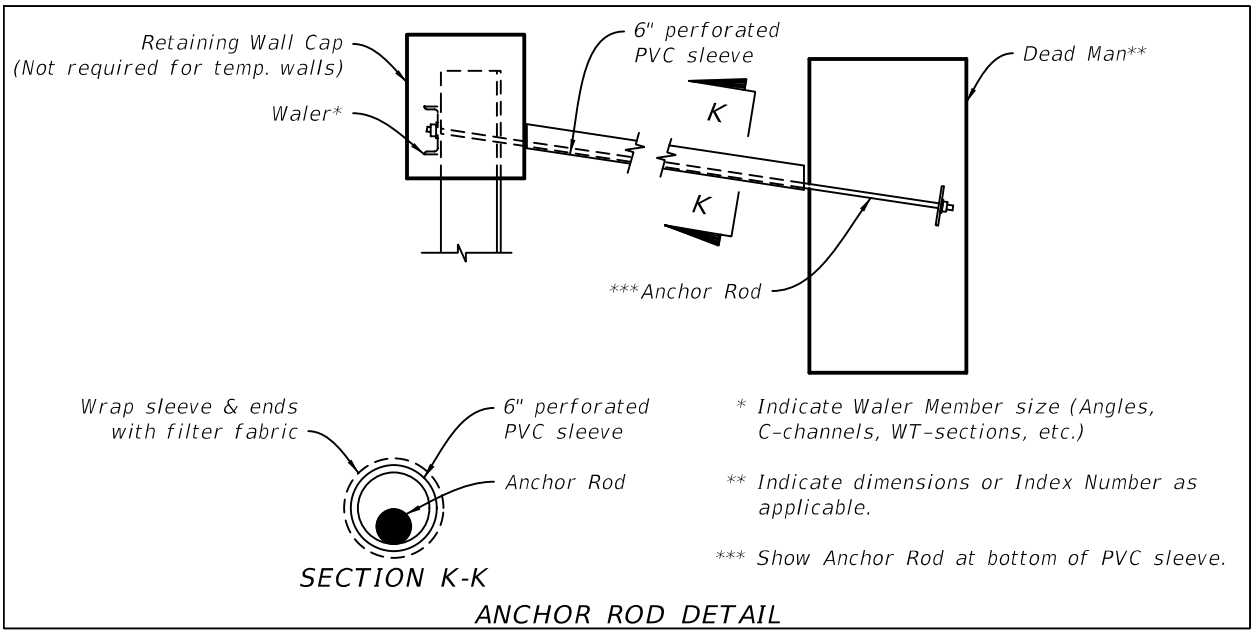

D. Dead man or anchor pile locations. Reference the same Station Line used for wall layout. Include details for anchor rods. If a standard concrete pile is used for dead man, reference applicable Design Standard and include pile data table. Alternatively, anchor piles may consist of a starter pile with a cast-in-place cap.

E. Where concrete sheet pile walls are anchored to the end bent cap, provide sufficient details on the end bent sheets for blockouts, swedged rods, etc. to show method of attachment of sheet pile wall anchor rod.

F. Provide notes alerting the contractor when installation by jetting alone will not be practical.

G. In the control drawing elevation view, show top of cap, top of pile, and the pile tip elevations along the length of the wall.

H. In the control drawing plan view, show wall cap expansion/control joint spacing.

I. When wall anchors are required:

1. Coordinate anchor locations to miss proposed foundation elements of adjacent structures such as bridges.
2. Coordinate soil anchor locations to miss existing adjacent buried structures.
3. Provide a construction sequence including when to place/proof test anchor and when to place backfill similar to Figure 19.7.2-1.

19.5.2 Permanent Steel Sheet Pile Walls

Permanent steel sheet pile walls can be either cantilever or tied back, depending on site conditions, wall height and loading. When permanent steel sheet pile walls are specified in the plans, fully developed wall control drawings and concrete cap details are required. In addition to the minimum plan content requirements outlined in ***SDM*** 19.2 above, include the following:

A. Project specific concrete wall cap. See Figure 19.5.1-1. If a wall-mounted barrier is specified, indicate the applicable Design Standard.

B. Tie-back locations if wall is tied back. Include anchor rod, deadman, anchor pile or soil nail details as necessary. In cases where the anchor rods may be deformed by settlement of the overlaying embankment, or where anchor rods are buried more than a third of the wall height, isolate the anchor rod its entire length. See Figure 19.5.1-2.

C. Deadman or anchor pile locations. Reference the same Station Line used for wall layout. Include details for anchor rods. Anchor piles typically consist of a single steel sheet pile with a cast-in-place cap.

D. Steel sheet pile wall data table for either anchored or cantilever steel sheet pile walls. This table can be found in the Structures Bar Menu.

E. Location of waler(s).

F. Drainage details.

G. Coating requirements. See ***SDG*** 3.5 for coating details.

H. Depict the sheet pile rolled section. See ***SDG*** 3.5 for sacrificial thickness requirements. In order to comply with Buy America provisions, a specific wall shape that meets the minimum section requirements must be indicated in the plans. If domestically-made shapes are not available, fully detail built-up sections such as king posts or cover plates to satisfy section requirements. See ***SDG*** 1.1.5 for additional information on Buy America requirements.

I. In the control drawing elevation view, show top of cap, top of pile, and the pile tip elevations along the length of the wall.

J. In the control drawing plan view, show wall cap expansion/control joint spacing.

K. When wall anchors are required:

   1. Coordinate anchor locations to avoid conflicts with proposed foundations elements of adjacent structures such as bridges.

   2. Coordinate soil anchor locations to miss existing adjacent buried structures.

   3. Include a construction sequence including when to place/proof test anchor and when to place backfill similar to Figure 19.7.2-1.

19.6 Permanent MSE Walls

Mechanically stabilized earth walls (MSE) are often the most economical wall type for heights over 8 feet. Typically, MSE wall proprietors must be listed on the QPL to supply MSE wall products on FDOT projects. MSE wall shop drawings will be produced by the wall vendor selected for the project and reviewed by the EOR. Project specific wall shop drawings will be created based on details shown in the wall control drawings. Shop drawing requirements can be found in ***Design Standard*** Index 6020. When developing wall control drawings for MSE walls, the following considerations must be addressed in addition to the requirements outlined in ***SDM*** 19.2:

A. Include Permanent Retaining Wall System Data Table cells in the plans. The cells can be found in the Structures Bar Menu. See the ***Instructions for Design Standards (IDS)*** for instructions on filling these data tables.

B. Show slip joint locations. If slip joint is being used for phased construction, these locations should be consistent with phasing dimensions found in the construction sequencing sheets.

C. Leveling pad locations. Step leveling pad when depth below finish grade exceeds five feet while maintaining two feet below grade minimum. At locations where MSE wall wraps back along the roadway at the end bent, do not step leveling pad. Instead, show leveling pad at a constant elevation. See Figure 19.6-1.

D. Provide wall offsets to the front face of MSE wall panel. Provide top of wall elevations to the gutterline (if present) or top of coping. Clearly indicate the locations where wall offsets and elevations are provided.

E. Take into account shoulder cross slope transition and sidewalk cross slope transition as roadway approaches the bridge when detailing top of coping/gutterline elevations. See Figure 19.6-2 and Figure 19.6-3. Use spot elevations in the Plan View to ensure shoulder transitions are accurately detailed in the plans.

F. For widenings, specify a slip joint between the existing MSE wall and proposed MSE wall, where the two walls are to interface.

G. Avoid acute corners with interior angles less than 70°. Walls with interior angles less than 70° must be designed as bin walls, resulting in greater costs and time. These should be avoided if possible.

H. Where MSE wall does not wrap around the end bent, raise the wall coping to the top of end bent cheekwalls at either side of the end bent. This will avoid the need for wingwalls. This includes median areas between twin bridges where wall is continuous between bridges. See Figure 19.6-4 and Figure 19.6.1-2 for details.

I. Where MSE wall terminates into fill slope, extend traffic railing and wall a minimum of 5 feet beyond fill slope limits. This will reduce the potential for drainage-related issues at the wall termination point. See Figure 19.6-1 for details.

J. When settlement issues require two-phased walls, provide details in the plans showing surcharge loading schedule, surcharge volumes, drainage details,

instrumentation requirements such as piezometer, settlement plate, or inclinometer as required by the geotechnical engineer. See ***SDG*** 3.12 for details on the construction of two-phased walls.

K. Flowable fill is not allowed to be used in any MSE wall application without SDO approval.

L. Slip joints are required at the following locations:

1. Phased construction limits where the MSE wall is constructed in separate phases.
2. Limits between acute corners designed as bin walls and the adjacent walls.
3. At hardpoints which pass through MSE wall such as storm drainage, adjacent footing of separate structure or other feature with settlement characteristics different from the MSE wall settlement characteristics.

M. For widening when placing MSE walls adjacent to existing fill slopes, include details in the plans to install MSE wall straps. Assume strap length approximately 0.80 of wall height to determine limits of excavation and to evaluate the need for temporary sheet pile walls. See ***SDM*** 19.7.2.

N. For widening when placing MSE walls adjacent to existing MSE walls where distance between walls is less than the required strap length (approximately 0.70-0.80 of wall height), a bin wall system to attach the existing wall system may be required. Include bin wall details in the plans.

O. Isolation details - Isolate MSE wall system from adjacent structures founded on deep foundations to accommodate different settlement characteristics. Avoid placing deep foundations under MSE walls where possible.

Figure 19.6-1 Wrap-Around MSE Wall Details

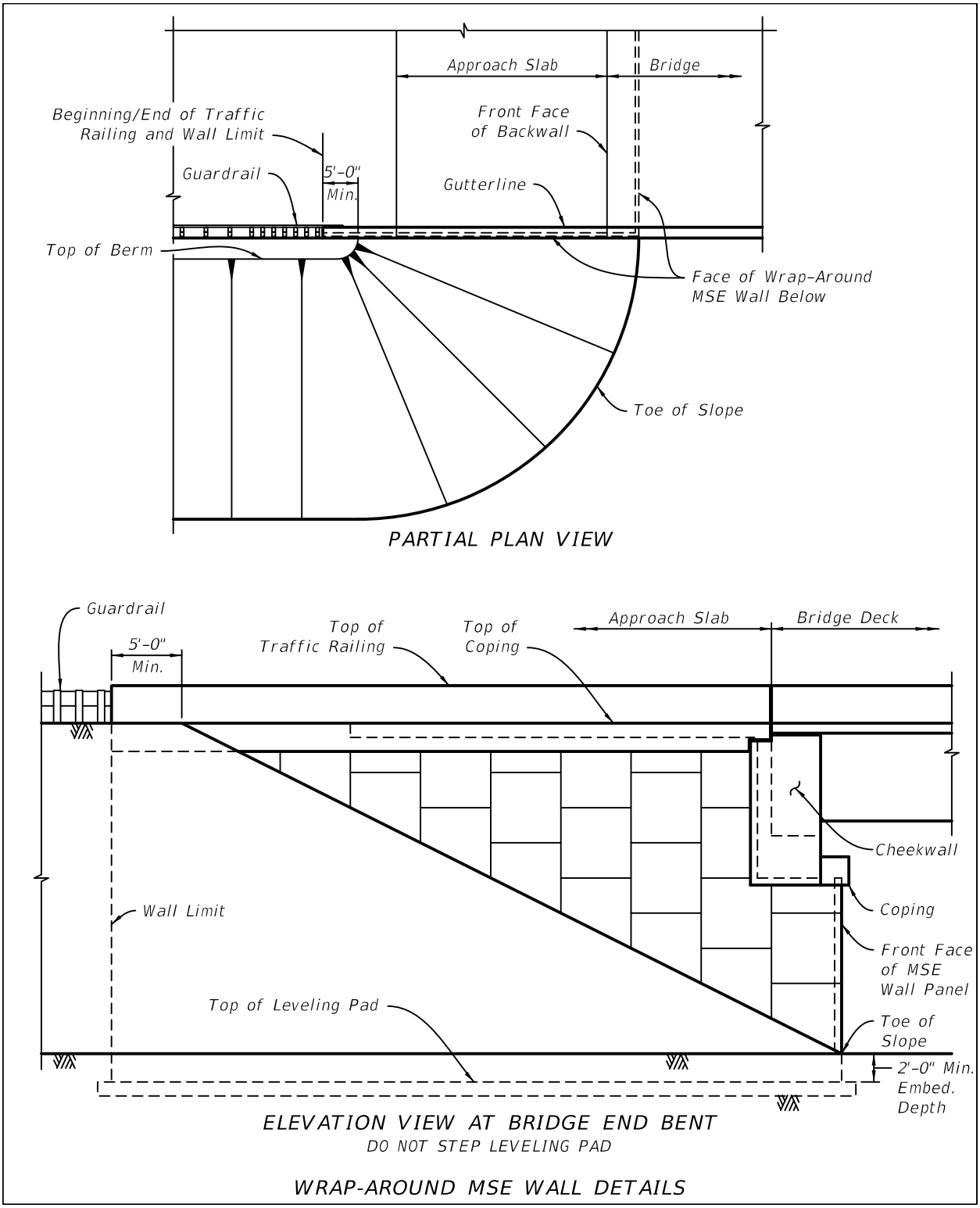

Figure 19.6-2 Cross Sections at Bridge Approaches

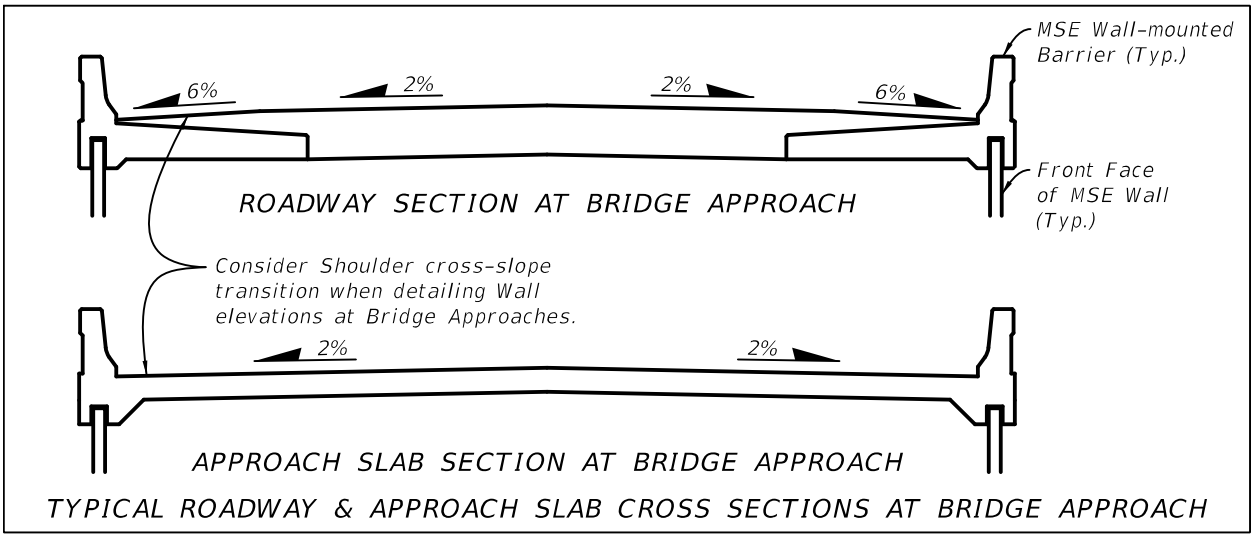

Figure 19.6-3 Cross Sections at Bridge Approaches with Sidewalks

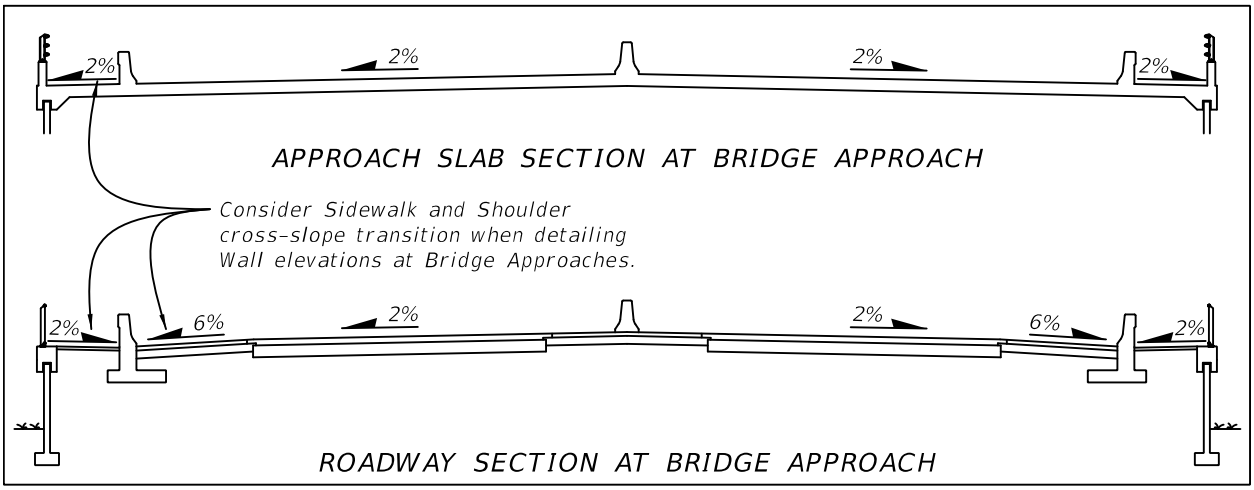

Figure 19.6-4 MSE Wall Details

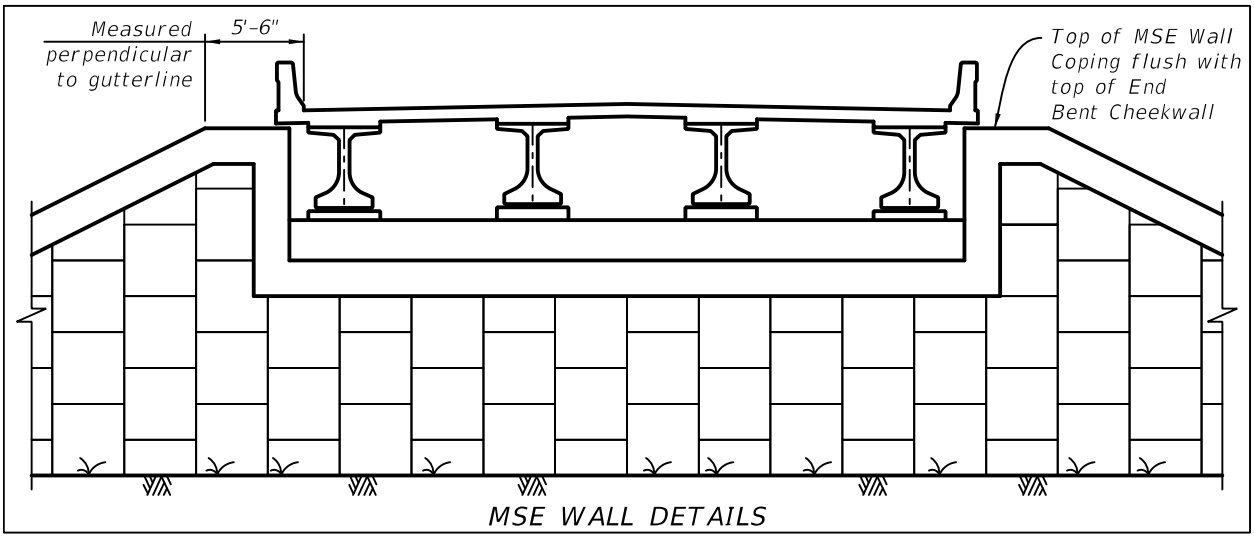

19.6.1 Future Widenings

Future widenings can be addressed during bridge design several different ways. What follows are some of the more common approaches to designing a bridge and associated walls to accommodate future widening.

A. For single bridges, incorporate a wrap-around MSE wall as shown in Figure 19.6.1-1. This will facilitate future widening by allowing future excavation to place the MSE wall straps for the widened section, minimizing the need for critical temporary sheet pile walls. Do not step leveling pad of the portion of the wall parallel to the roadway.

Figure 19.6.1-1 Single Bridge with Future Widening

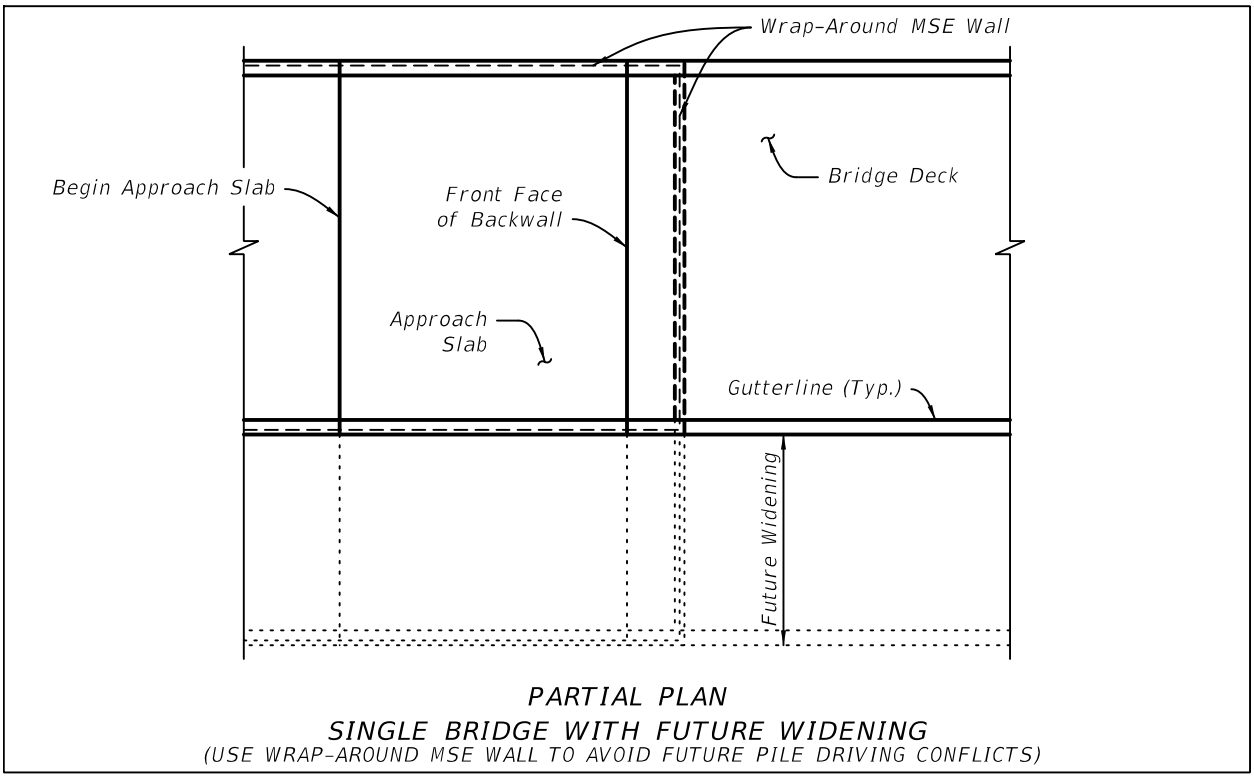

B. For twin bridges where future widening of the carried facility is anticipated to the median, or when MSE walls are used under a bridge in conjunction with side fill slopes, the preferred option is to construct MSE walls full height between bridges and drive piles using the same spacings and design criteria as the proposed piles. In cases where driving piles is cost prohibitive, place sand-filled casings in the location of the future piles. This will avoid conflicts with soil reinforcement during construction of the future widening. Minimum diameter of the casings is 6 inches greater than the largest dimension of the pile cross section (the diagonal for square piles). Indicate in the plans that casings are to be filled with sand and capped. In either case, design wall soil reinforcement for the worst-case loading condition, typically the future condition. See Figure 19.6.1-2.

Commentary: The casing option is a fairly low-cost alternative when compared to reconstructing the MSE wall in the future to facilitate future bridge widening. This provision is recommended where widening is likely to occur at some point during the life of the facility.

Figure 19.6.1-2 MSE Wall Details with Allowance for Future Inside Widening

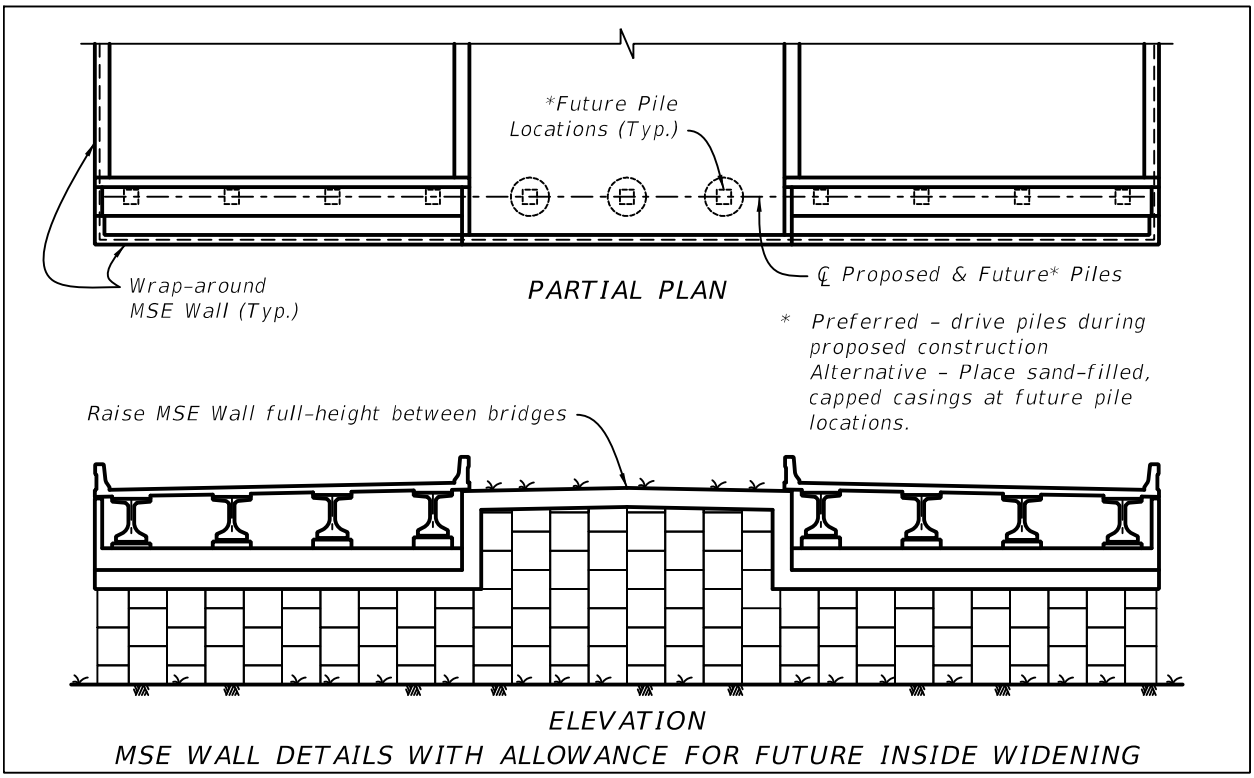

C. For roadways that are supported by MSE walls, consider placing the vertical and horizontal limits of the wall in locations that can accommodate future widening of the supported road. See Figure 19.6.1-3. Soil reinforcement should be designed for the future loading condition.

Figure 19.6.1-3 Section Through Roadway Supported by MSE Wall

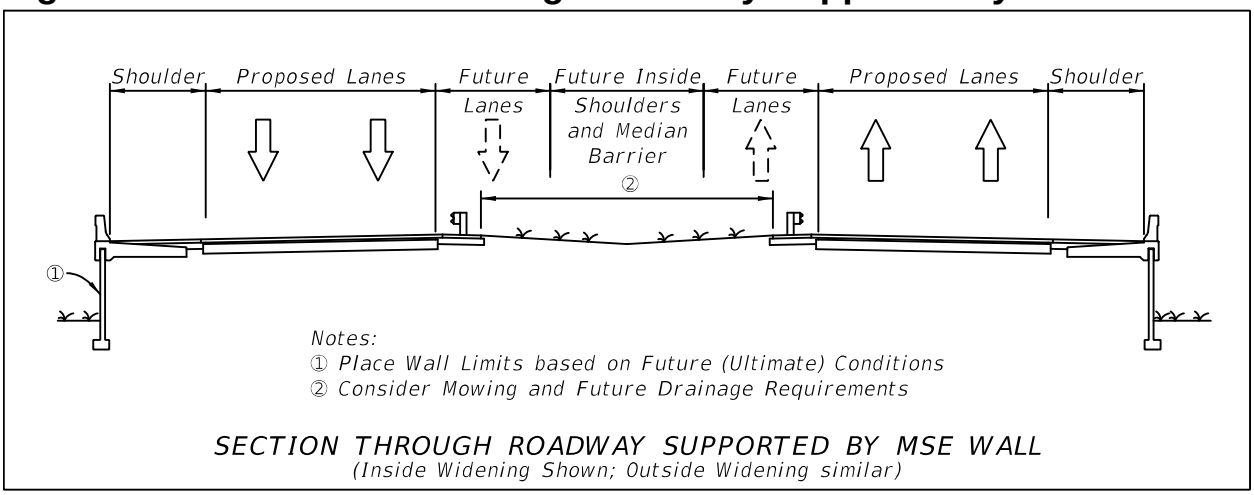

19.7 Temporary Walls

Base temporary wall type selection on wall height, cut/fill condition and designation as critical. Figure 19.7-1 defines critical walls in the vicinity of travel lanes. For temporary walls required to stabilize utilities, contact the District Utilities Engineer for determination of critical walls. Coordinate with the district early in the design phase to ensure the proper wall type is selected. Preliminary critical temporary wall control drawings must be included in the BDR. See Construction Sequence Example 3 of the ***Structures Detailing Manual Examples*** for an example of critical temporary MSE and tied-back sheet pile walls used in phased construction.

Figure 19.7-1 Location of Critical Walls with Respect to Traffic Lanes

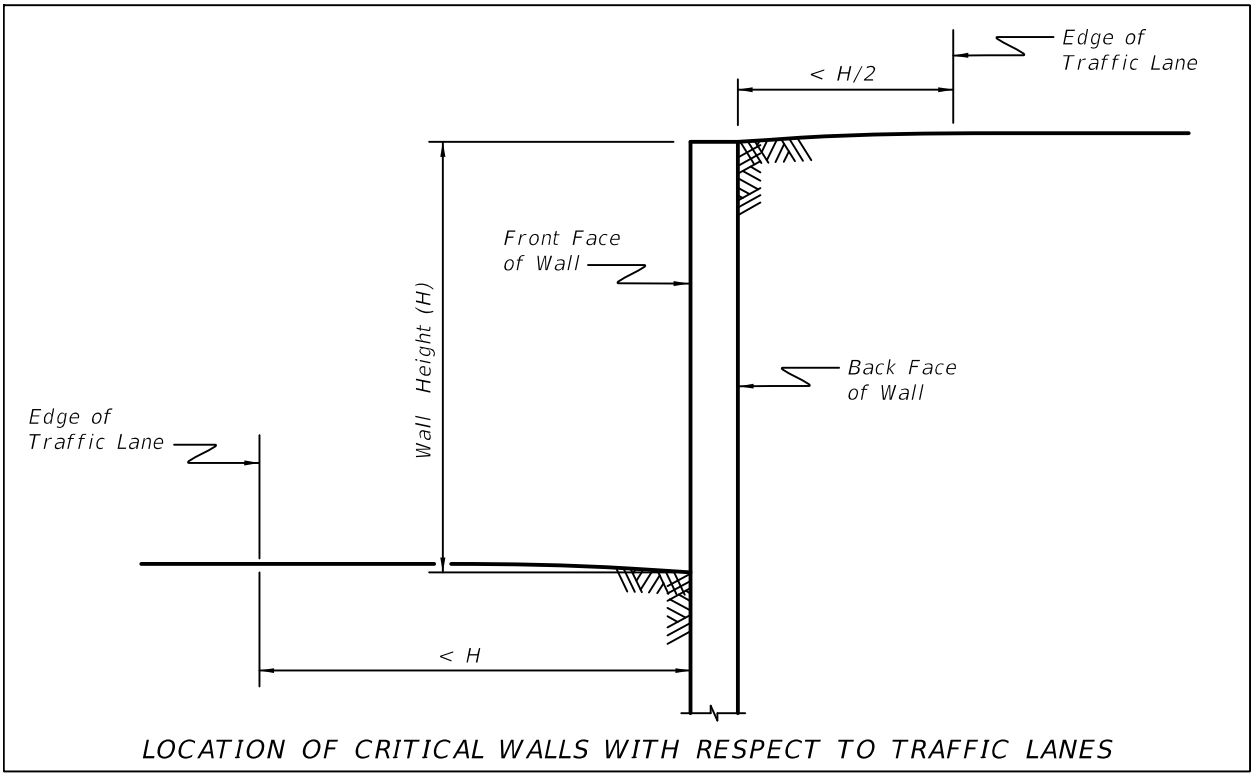

19.7.1 Temporary MSE Walls

Temporary MSE walls are designated as Type 3 walls in the QPL. Temporary MSE walls are typically used in fill conditions and abandoned in place. When temporary MSE walls are specified in the plans, include the appropriate data table cell. Critical temporary MSE walls must comply with ***Design Standard*** Index 6030. Refer to the plans content requirements shown in the ***Instructions for Design Standards (IDS)*** for temporary MSE walls and in ***SDM*** 19.2 above for wall control drawings.

19.7.2 Temporary Sheet Pile Walls

Temporary sheet pile walls can be used in either fill or cut conditions. Due to their relative ease of installation, sheet pile walls are common in projects that are phase-constructed. Sheet pile walls in excess of approximately 15ft in height are tied back using a combination of soil anchors and walers for tiebacks. If tiebacks are used, provide a construction sequence. See Figure 19.7.2-1 for a typical phased construction sequence using critical temporary tied-back steel sheet pile walls. Figure 19.7.2-1 is an alternative to Construction Sequence Example 3 of the ***Structures Detailing Manual Examples***.

Critical temporary sheet pile walls require complete design details in the contract plans, including walers, tiebacks, wall cap, etc. When critical temporary sheet pile walls are specified in the plans, include the appropriate sheet pile wall data table cell.

Wall control drawings, details or signed and sealed designs are not needed when non-critical temporary sheet pile walls are specified in the plans. Use a note showing the expected location of the wall(s) on the appropriate sheet, typically the Foundation Layout sheet. When non-critical temporary sheet pile walls are expected, indicate the appropriate pay item number.

Figure 19.7.2-1 Alternate Wall Construction Sequence

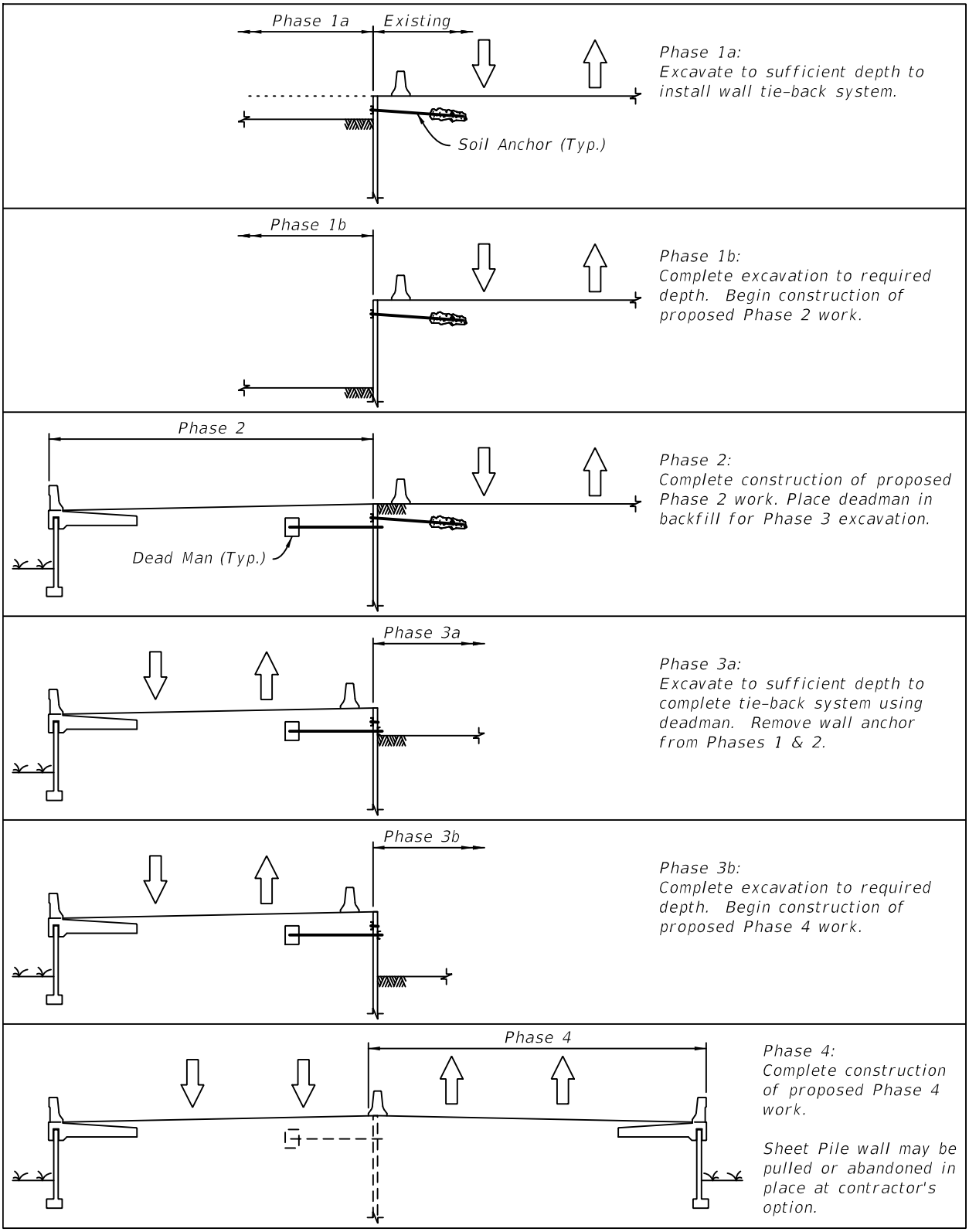

19.8 Soldier Pile Walls

Soldier pile walls offer a suitable alternative when a rock layer is near the ground surface, such as the Fort Thompson Layer, presenting a challenge to constructing other more traditional wall types. When soldier pile walls are specified, and timber lagging is utilized, include a note alerting the contractor to the possibility of dewatering if high ground water is anticipated during construction. Indicate tie-back requirements if any, including layout of tiebacks or soil nails.

For precast soldier wall systems consisting of prestressed piles and precast panels:

A. Show top-of cap, top of pile, top of panel, and tip of pile elevations in the wall control drawing elevation view.

B. Show pile spacing and panel layout in the wall control drawing plan view.

   1. Allow a gap between adjacent panels to facilitate the jetting of the panels into place and jetting tolerances.

   2. Address soldier pile placement and batter tolerances to ensure proper fit-up.

   3. Address method of installing piles. Since precast soldier pile wall systems are selected due to the presence of hard rock layers located below the bottom of the precast panels, preforming is typically called for in the plans.

20 SEGMENTAL BRIDGES (Rev. 01/11)

20.1 General

A. Segmental bridges are inherently complex to design and build. They require a coordinated effort between designers and detailers in order to develop integrated plans that address all design, detailing and constructability issues. The information contained herein is only part of the requirements necessary to successfully accomplish this task. For additional requirements see ***SDG*** Chapter 4.

B. Structural segmental drawings and details will be used by fabricators and contractors for the production and erection of segmental bridges erected by span-by-span or balanced cantilever methods. This chapter does not cover spliced or drop-in-girders or incrementally launched bridges.

C. The sheets outlined in this chapter are only a partial list and do not constitute the total sheets required for a complete submittal.

D. General Considerations

1. In general, provide a uniform segmental design that maximizes the reuse of formwork, reinforcing jigs, and casting cells. This approach will minimize cost, provide uniform aesthetics and maximize production rates through the use of assembly line fabrication processes. Examples include:

   a. Core Form: For small projects with minimal project variability, a single core form may be all that is necessary. For large projects with large project variability, a second core form size may be required.

   b. Post-tensioning Bulkhead and Shear Key Layout. For small projects with small project variability a single P.T. bulkhead form and single shear key layout may be all that is necessary. For large projects with large project variability, a second P.T. bulkhead form may be required.

2. Designing for Project Variability: During the Bridge Development Report Phase, select and dimension the segmental box shape to accommodate all of the structural and geometric demands of the project. Provide a design that accommodates all load demands, roadway section widths, geometry constraints, span lengths, etc.

Figure 20.1-1 Reinforcing Jig for Variable Depth Segment

3. Precast Segment Weights: When proportioning precast segments, consider the affect of segment weight on hauling and erection equipment costs. The Contractor's equipment overhead costs are based on the heaviest precast segment on the project. For instance, typically split pier segments are utilized such that the weight of the pier segment half is closer to the weight of the typical or expansion joint segment located within the span. For especially large bridge components, cast-in-place pier segments with closure pours may be more cost effective than precast segments especially when erection equipment costs are considered.

4. Bridge Drainage System. Ensure that the segments can accommodate the bridge deck drainage systems. Design bridge drainage system as an integral part of the segmental design. Whenever possible, locate drainage deck inlets near the pier. Common problems to avoid when laying out the drainage system are:

   a. Conflicts between the drainage inlets and the negative moment tendons on balanced cantilever bridges.
   b. Conflicts between the drainage piping and the pier segment diaphragm post-tensioning and reinforcing steel.
   c. Conflicts between the drainage inlets and transverse post-tensioning.

   If required, provide local thickening of the underside of the box wing and widening of the pier column flare width to accommodate the drainage inlet and piping. Refer to ***SDM*** Chapter 22 for more details.

5. Construction access: Verify construction access for transportation, handling and the erection of all segments. Verify capacity of existing structures along likely haul routes.
6. Segment Length and height: When segments are to be transported by truck, limit segment lengths so that segments are able to travel within a roadway lane. Limit segment height including the barrier reinforcement so that segments can be delivered under overpasses.

20.2 Segment Designation / Segment Layout Sheet

The Segment Designation Sheet is required for all segmental bridges regardless of the construction type. At a minimum, include the following on the Segment Designation Sheet:

A. Elevation View of the Bridge. The Elevation View shall include the following:

1. Abutment and Pier locations.
2. Dimensions showing the following: overall span lengths, number of a particular type of segment with overall lengths (e.g. 13 Segments @ 10'-0" = 130'-0"), closure joint, pier segment (pier segment halves), overall bridge length and segments with anchor blocks, horizontal deviations and vertical deviations.
3. Segment joint number.
4. Segment label and type with a corresponding legend(s) (e.g., "P" - Pier Segment, "E" - Expansion Joint Segment, "T"- Typical Segment, "C. J." - Closure Joint Segment, "D" -Deviation Segment, "HD" - Horizontal Deviation Segment, etc.). Some examples are listed below:
   a. Example of segment label for span by span: 2N-T3 where "2" is the Span Number, "N" is the Girder Designation (Northbound or Southbound), "T" is the Segment Type (T for typical), "3" is for the segment number.
   b. Example of segment label for balanced cantilever: 5-12U where "5" is the pier number, "12" is the segment number, "U" is Up Station or Down Station.
   c. Provide legend for segment identification and designate segment types.

B. Provide legend and designate which segments are cast with access openings, bridge drainage inlets, light pole pilasters, temporary top slab construction access holes, etc.

C. Provide the following note or similar: "Span lengths given are horizontal projections along the centerline of girder. Segment lengths given are chord lengths along centerline of girder."

20.3 Superstructure Drawings - Segment Dimension Sheets

The Segment Dimensions Sheets include the following sheets: Typical Segment Dimensions, Deviation Segment Dimensions, Expansion Joint Segment Dimensions, and Pier Segment Dimensions. Provide the following information for each of the segment types:

A. Typical Segment Dimension Sheet

1. Cross section with barriers/bridge rail.
2. Dimension for overall width of the top slab and horizontal string of top slab dimensions. Include dimensions for barriers, dimension to PI of web and top slab, dimensions to angle breaks in the soffit, dimension to centerline of the box, haunch thickness, drip groove, etc.
3. Dimension overall width of bottom slab and horizontal string of bottom slab dimensions. Provide dimensions to drain holes, angle breaks in the bottom slab soffit, dimensions to centerline of the box, etc.
4. Dimension overall height of box and dimension top slab thickness, bottom slab thickness, haunch thickness, web thickness, etc.
5. Slope of web. If web thickness varies with height, provide slope for inside and outside face.
6. Dimension for all fillet radii.
7. Variables may be used to dimension variable depth and variable height segments. In these cases, provide a table of variable dimensions.
8. Erection blisters or temporary stressing blisters.
9. Half plan of top slab and half plan of bottom slab fully dimensioned.
10. Section View with dimensions.
11. Dimension any openings for electrical, trunk lines, drainage pipe in the bottom slab, vent holes, etc.

B. Deviation Segment Dimension Sheet

In addition to providing the information for the Typical Segment Dimension Sheet described above, provide the following additional information:

1. Deviation segment dimensions.
2. Locate temporary P.T. bar stressing holes.
3. Locate and label tendons.
4. Show external P.T. steel ducts.
5. Locate electrical maintenance lighting pass-thru holes.

C. Expansion Joint Segment Dimension Sheet

In addition to providing the information for the Typical Segment Dimension Sheet described above, provide the following additional information:

1. Dimension expansion joint box thickening and block-out.
2. Dimension diaphragm and diaphragm opening.
3. Anchor protection drip groove.
4. Locate external longitudinal tendon anchors and steel ducts.
5. Locate electrical maintenance lighting pass-thru holes.
6. Locate plinth details and locate centerline of bearing locations.
7. Show transverse tendon geometry and anchors.

D. Pier Segment Dimension Sheet

In addition to providing the information for the Typical Segment Dimension Sheet described above, provide the following additional information:

1. Dimension diaphragm and diaphragm opening.
2. If pier segment is formed using two segment halves, show P.T. bar ducts
3. Locate external longitudinal tendon anchors and steel ducts.
4. Locate electrical maintenance lighting pass-thru holes.
5. Locate plinth details and locate centerline of bearing locations.
6. Show transverse tendon geometry and anchors.

20.4 Superstructure Drawings - Segment Reinforcing Sheets

The Segment Reinforcing Sheets include the following sheets: Typical Segment Reinforcing, Deviation Segment Reinforcing, Expansion Joint Segment Reinforcing, and Pier Segment Reinforcing. Provide the following for the segment reinforcing sheets:

Show reinforcing steel, post tensioning anchors and ducts for all longitudinal and transverse tendons, and P.T. Bars. Verify post tensioning spirals do not conflict with reinforcing, other spirals, drainage, or other PT ducts. Show ducts, PT bar locations and bridge drainage schematically (Top and Bottom Slab). Do not provide dimensions or spacing to ducts. Dimension to ducts to be provided on the bulkhead sheet. Show reinforcing for segmental box, diaphragms, blisters, and/or deviation saddles as required. Provide special bar bends where required. At a minimum, show cross section, plan and elevation view.

Pier Segment and Expansion Joint Segments are highly congested with reinforcing (longitudinal, shear, transverse, and torsion bars), transverse top slab tendons, longitudinal tendons, spirals, PT bars, and looped or transverse diaphragm tendons. Therefore, these segments require integrated drawings. Integrated drawings should be 3D; however, for less congested segments, multiple sections using 2D integrated drawings are acceptable.

Figure 20.4-1 Reinforcing in Deviation Segment

20.5 Superstructure Drawings - Transverse Post-tensioning Details

The Transverse Post-Tensioning Details show the typical transverse post-tensioning for the typical, pier, and expansion/abutment segment. At a minimum, show the following:

A. The cross section of the segment. If special details are required for either the pier segment or abutment segment, show a half elevation of the typical (and other segments) and a half elevation of the segment requiring other post-tensioning.

B. Define the transverse tendon trajectory using distance and offsets to tendon P.I. Also show longitudinal tendon and P.T. Bar ducts.

C. Provide End View of blockout and transverse post-tensioning anchorage.

D. Provide Plan view of anchorage. Show plan view of tendon and local bursting reinforcing.

E. Provide notes including whether the tendon is single or double end stressed and whether the stressing is staggered or partially stressed prior to form release with minimum concrete strengths.

F. Tendon spacing for each type of segment.

20.6 Superstructure Drawings - Bulkhead and Shear Key Details

The Bulkhead and Shear Key Details Sheet(s) outlines the shear keys for the typical segment. These sheets may also apply to the expansion joint and the pier segment. At a minimum, show the following:

A. The cross section of the segment with the location and size of the shear keys. Provide web shear keys and alignment keys in top slab and bottom slab. Typically, one sheet is used for each of the segments required.

B. Locations and labeling of all longitudinal ducts (top slab and bottom slab).

C. Locations of all the post-tensioning anchorages (top slab and bottom slab).

D. Dash-in blister locations for permanent and temporary post-tensioning.

E. Section cuts at each shear key. Provide dimensions of each type of shear key for each of the section cuts.

F. If pier segment is formed using two segment halves, show shear keys at segment diaphragm interface, epoxy bleed drain holes, and P.T. bar ducts used to assemble full pier segment.

G. Blockout details of permanent and temporary PT.

H. Notes on duct dimensions.

20.7 Superstructure Drawings - Longitudinal Post-Tensioning Layout

The Longitudinal Post-Tensioning Layout Sheet(s) show the overall longitudinal post-tensioning layout for each span. The Longitudinal Post Tensioning Layout includes all sheets for the permanent post-tensioning and all sheets for the temporary post-tensioning. At a minimum, show the following:

A. For span-by-span and balanced cantilever construction:

1. Plan View and Elevation View of the post-tensioning. The plan view usually consists of a half plan top slab and a half plan bottom slab. Tendon locations should match locations on the bulkhead sheet.
2. Show all cantilever and continuity tendons in Plan View with the horizontal deviation. Show all post-tensioning vertical deviations in the Elevation View.
3. For internal cantilever and continuity tendons, show a partial cross section of the top and bottom slab on the Plan View.
4. Label segments, closure joints, and pier locations. Show split pier segments if applicable.
5. Label all post-tensioning tendons. Call out PT bars on the plans as either temporary or permanent.
6. Show all blisters and deviation saddles for bottom slab and top slab tendons and PT bars.

B. Provide a Legend for the sheet. Legend should show "Stressing End", "Dead End", "Internal Tendon", "External Tendon", "PT Bar", etc.

C. For external tendons including future tendons used with horizontally curved bridges, verify that tendons do not conflict with box webs.

20.8 Superstructure Drawings - Post-Tensioning Details

The Post-Tensioning Details Sheet(s) incorporate all of the post-tensioning details to describe the overall geometry of the tendons not otherwise shown in other sheets. The Post-Tensioning Details Sheet(s) show the detailed PC, PT, and PI of the tendons, tendon radius (plan and elevation), and anchorage location for all permanent and temporary post-tensioning tendons and bars. Post-Tensioning details for the Pier, Expansion and Deviation Segments shall be included on the segment reinforcing sheet(s). Sheets may include (but are not limited to) the following:

A. Cantilever Tendon Anchorage Details

B. Horizontal Tendon Curvature Details

C. Miscellaneous Post-Tensioning Details

20.9 Superstructure Drawings - Erection Scheme and Construction Notes

The Erection Scheme and Construction Notes Sheet(s) show one detailed method for the construction of the bridge, giving consideration to site constraints, construction equipment reach and mobility, MOT, etc. The sheet(s) typically shows an elevation view of the step-by-step construction using trusses, cranes, segment lifter, etc. and construction notes for each phase. General erection schemes and sheet requirements are shown below for balanced cantilever and span-by-span erection:

20.9.1 Balanced Cantilever

A. General Balanced Cantilever Erection Procedure for Precast Segments

1. Set pier segment or pier segment halves onto pier top and stabilize with shim packs, jacks, vertical P.T. bars or other means. Stress segment halves together. Ensure there is adequate room to place jacks, etc. on the top of the pier.
2. Install temporary towers.
3. Erect and stress one segment on either side of pier. Segments can either be erected on each side of the pier simultaneously or on one side of the pier and then the other side. Support erected segments vertically on top of temporary towers.
4. Set the geometry after the first two segments have been erected (pier segment plus the one segment on each side of pier segment) by jacking vertically and horizontally as necessary. Provide temporary horizontal jacking brackets to facilitate the alignment work. Provide temporary longitudinal fixity of permanent bearings.

5. After the geometry has been set, grout permanent bearings.
6. When grout has reached strength, transfer vertical pier segment reaction on to permanent bearings by removing the shim packs.
7. Continue the erection of cantilever segments. Install segments first with PT Bars that are continuously coupled, then stress permanent post tensioning strands. The PT bars are used to hang the segments from the cantilever tip and to squeeze epoxy at the joint. Permanent internal PT Bars for balanced cantilever construction may be stressed up to 70% of the ultimate tensile strength. Alternate sides of the cantilever in order to keep out-off-balance forces in the cantilever to a minimum.

Figure 20.9.1-1 Means of Stabilizing Cantilever

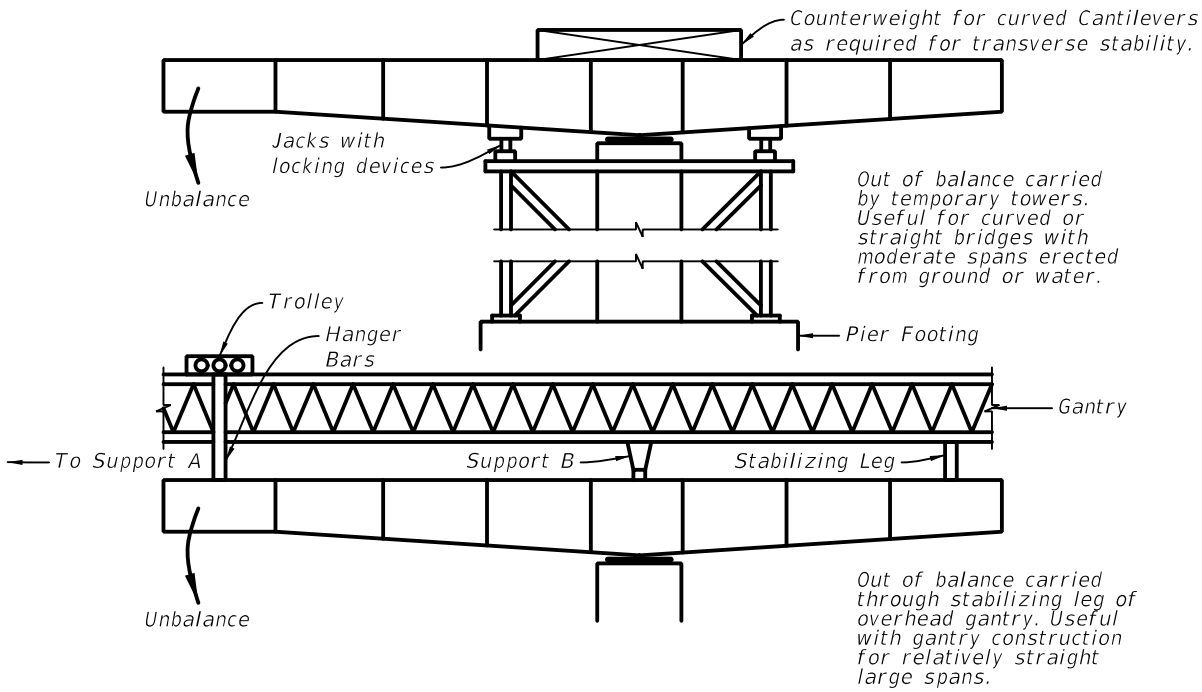

ERECTION SYSTEMS: MEANS OF STABILIZING CANTILEVER

Figure 20.9.1-2 Stabilization of Balanced Cantilever

8. Cast closure and stress continuity tendons after either:
   a. Two adjacent cantilevers have been constructed or
   b. One cantilever has been constructed and the back-span on falsework has been constructed.
9. Release the temporary towers. Release the temporary longitudinal bearing restraints for each cantilever as continuity is made to adjacent spans provided that a longitudinal restraint is maintained somewhere along the unfinished unit as well as each cantilever prior to closure.
10. In general, construct balanced cantilever bridges in the following two directions:
    a. From abutment to abutment while making spans continuous as construction progresses or
    b. From each end abutment towards the center with final closure in the center span as construction progresses.
11. For balanced cantilever bridges with cast-in-place pier segments, closure pours are required between the pier segment and the first segment. Set the geometry of the pier segment, hang the first segment on either side of the pier segment with strongbacks and PT bars, and set the geometry of the segment before the first closure pour is made between the segment and pier segment. Stress PT and continue erection as described above.

Figure 20.9.1-3 Setting Geometry with Strongbacks

B. Cantilever Stability During Construction

1. Stability of the cantilever can be accomplished by three different methods.

   a. Temporary towers. Temporary towers are used to provide stability and can either be provided on one side of the cantilever or wrapped around the column. When towers are provided on one side only, provide the out of balance weight of the cantilever on the tower side.

   b. Overhead gantry. An overhead gantry spanning from the cantilever pier segment to the previously placed cantilever with leg connection along the cantilever such that it provides stability to the cantilever during construction.

   c. Integral pier table and column. The pier column itself can provide stability when the pier segments are cast-in-place as part of the column. Due to the rigidity of the frame action, strong backs are used at the mid-span closure pours to control geometry. See SDG for design requirements associated with designing the superstructure and column for the worst case cantilever erection tolerances.

2. Temporary towers are typically founded on the top of the permanent pile/shaft footing. The temporary out-of-balance loads can control the design of the piles/ shafts and footing, therefore it is important for the assumed equipment loads and construction loads to be shown in the plans as part of the erection notes.

3. Temporary towers are intended to transmit the out-of-balance moments from the cantilever to the pier footing. The temporary towers are not intended to carry the

vertical weight of the cantilever; the weight of the cantilever is to be taken by the pier column through bearings or shims.

4. Show required counterweights and tie downs in the plans necessary to maintain stability of curved cantilevers. Show locations of counterweights and tie downs and provide assumed weights and forces and sequence of placement and removal.
5. Verify the temporary bearings/shims can be placed on the top of pier to stabilize the pier segment. Verify adequate space for grouting the bearings. Show external brackets where necessary.
6. Depict the assumed method for stabilizing the cantilevers during balanced cantilever construction on the plans.

C. Assumed Construction Methods. The methods below can be used for the construction of balanced cantilever structures. Clearly depict the assumed methods for cantilever construction on the plans. In some cases, more than one construction method may be necessary for a given project due to crane access limitations or traffic control restrictions. Show the magnitude and location of the assumed reactions for erection equipment onto the structure.

1. Overhead Gantry
2. Segment lifter
3. Beam and winch
4. Crane
5. Form traveler

Figure 20.9.1-4 Gantry and Stabilization Towers

Figure 20.9.1-5 Gantry with Leg on Pier Segment

D. Erection Drawings - Show the following in the erection drawings:

1. Assumed method of erection (e.g., crane, overhead gantry, etc.)
2. If erection is by overhead gantry
   a. Show overhead gantry on plans.
   b. Provide assumed length and weight (unloaded). Verify weight of gantry is compatible with required strength and lifting capacity of gantry. See Figure 20.9.1-6
   c. Provide assumed vertical and longitudinal thrust loads during segment erection and during launching. Provide critical loading from gantry to the substructure. Account for bridge grade and add an additional 1% grade when computing thrust loads to account for gantry flexibility and friction forces.
   d. Provide special construction notes for gantry.
      i. If gantry leg requires touchdown within a span during launching, show assumed steps and distances of the gantry moves. Verify capacity of superstructure for this temporary gantry loading. Show assumed reaction magnitudes and locations in the plans.
      ii. Specify whether design assumes gantry loading is over the pier segments during segment erection.
      iii. Include notes associated with stabilizing pier segment to the top of the pier. Ensure that the plan dimensions of the pier cap for temporary shims or vertical PT are sufficient to stabilize the pier segment. Show external brackets where necessary.

Figure 20.9.1-6 Gantry Loads During Launching

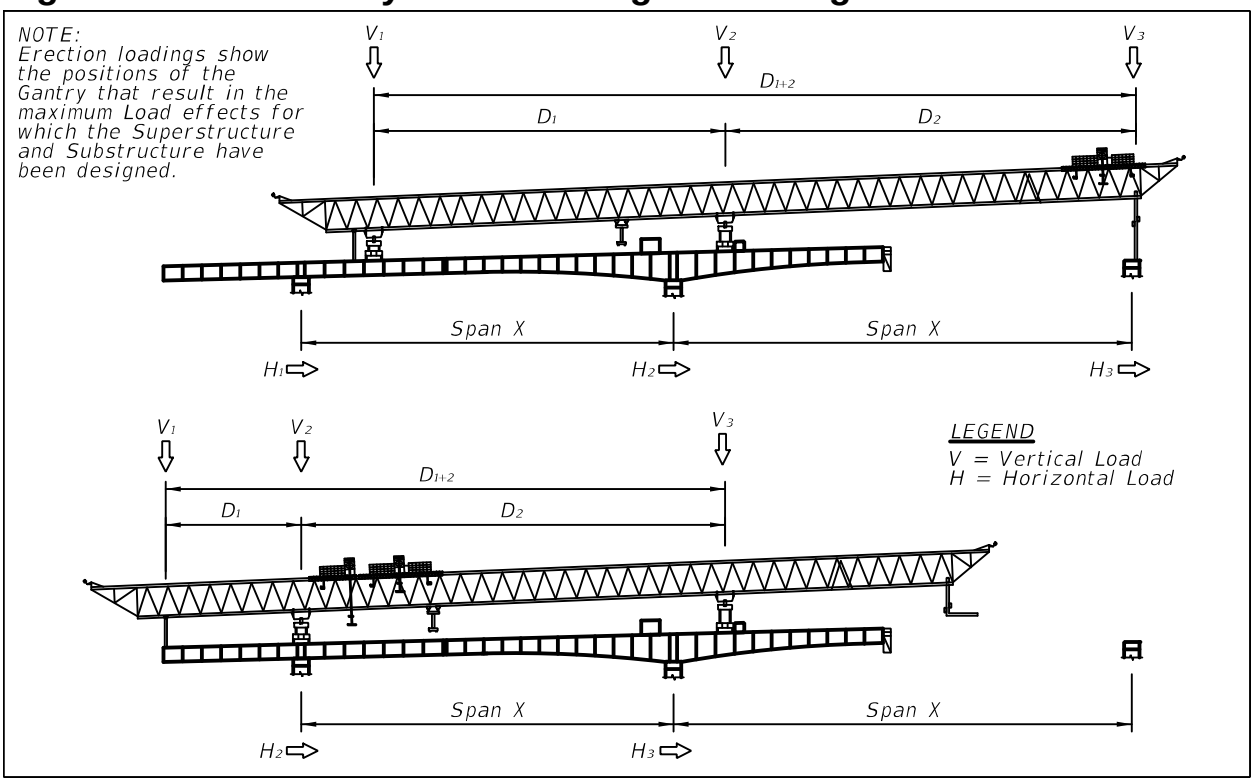

3. If erection is by segment lifter or by beam and winch:
   a. Show sketch of segment lifter/beam and winch. Provide magnitude and location of assumed reactions on the superstructure.
   b. Show assumed PT bar tie-down location. Verify capacity of top slab at tie down location.

Figure 20.9.1-7 Beam and Winch Details

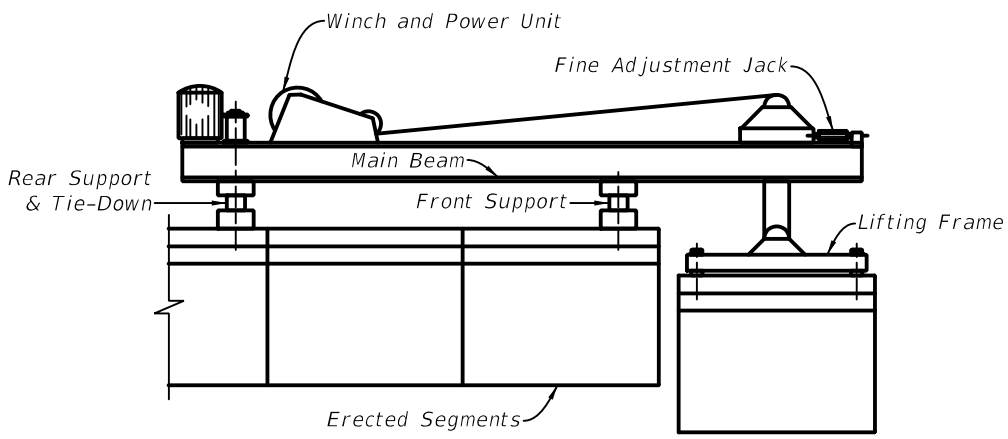

BEAM AND WINCH DETAILS

4. If erection is by crane: Show a sketch in the plans depicting land/barge based cranes. Perform a crane access assessment during design. Assessment should include crane placement for all segment lifts for the project. Assessment should include:
   a. Assumed crane size (tonnage), assumed boom length, etc.
   b. Working radius of the crane and ensure that all segments can be erected by assumed crane size. Verify clearances between wings and boom.
      i. Ensure that crane placements, durations of lifts, and resulting traffic impacts are acceptable.
      ii. Account for railroad 1.5 factor lifting restrictions as required.
   c. In general, do not place cranes on top of or immediately next to MSE walls. Coordinate any required temporary construction easements during design. Submit a copy of the crane access assessment to the Department for review.
   d. Depict in the plans when:
      i. Cranes have to be placed onto existing bridges where strengthening is required. In this case assumed crane size and strengthening measure need to be clear for bid purposes.
      ii. Special access platforms required due to unusually weak subsurface conditions, or sloping ground surfaces.

iii. Instances where unusually large cranes are required. In this case show:

- Assumed crane size (tonnage), assumed boom length, etc.
- Working radius of the crane and ensure that all segments can be erected by assumed crane size. Verify clearances between wings and boom.

iv. Ensure that Traffic Control Plans restrictions are consistent with assumed placement and duration made during design.

5. If erection is by form travelers: Approximate form travelers weight for the cast-in-place cantilever construction. Form traveler weight will vary depending on the size of the segment and span. Assume a minimum form traveler weight of 160-180 kips for single cell box and 280-300 kips for twin cell box. Show assumed traveler reaction magnitudes and locations in the plans.

6. Examples of erection notes to be included on erection drawings:

   a. At all non-fixed bearing cantilever locations provide temporary longitudinal restraints. Temporary longitudinal restraint shall remain in place until cantilever is closed with adjacent cantilevers which are longitudinally restrained.

   b. All temporary towers adjacent to vehicular traffic must be protected by traffic barriers.

   c. All temporary towers supporting free cantilevers over traveling public shall be designed by the Contractor with signed and sealed calculations including field certification by a professional engineer registered in State of Florida prior to allowing traffic to proceed underneath.

   d. The erection sequence considered in the design and shown herein anticipates cantilever erection using ground level cranes and does not load the superstructure cantilevers.

20.9.2 Span by Span Erection

A. General Span by Span erection for precast segments.

1. Secure and align the truss.
2. Place pier segments and stabilize with shim packs, jacks, PT bars or other means.
3. Erect segments in a span.
4. Apply epoxy between typical segments and stress together using temporary external PT bars. Internal bars may also be used. Limit the force in the external PT Bar to 50% of the Guaranteed Ultimate Tensile Strength (GUTS) for re-used bars.
5. Repeat the process until all of typical segments in the span are erected and stressed.
6. Place concrete blocks in the gap between pier segments and the typical segments. Partial stress tendons to approximately 10% GUTS.
7. Provide cast-in-place closure joints between the pier segments and the typical segments.

8. Place and stress tendons.
9. Check alignment and grout bearings.
10. Remove shim packs.

Figure 20.9.2-1Span by Span Construction

B. Stability of Pier Segments During Construction. Set pier segment onto pier top and stabilize with shim packs, jacks, vertical PT bars or other means. Show locations of temporary bearings/shims. Verify space for the temporary bearings/shims on top of pier. Show external brackets where necessary.

C. Assumed Construction Methods. The methods below can be used for span by span construction. Assumed methods for cantilever construction shall be clearly depicted on the plans.

1. Under slung truss
2. Overhead Gantry
3. Top-down Construction using crane.

D. Erection Drawings - Show the following in the erection drawings:

1. Assumed method of erection (e.g., underslung truss, overhead gantry, etc.)
2. If erection is by overhead gantry:
   a. Show overhead gantry on plans.
   b. Provide assumed weight (unloaded). Verify weight of gantry is compatible with required strength, lifting capacity and deflection characteristics of gantry.

c. Show assumed longitudinal thrust loads during segment placement and launching. Provide critical loading from gantry to the substructure. Account for bridge grade and add an additional 1% grade when computing thrust loads to account for gantry flexibility and friction forces.

d. Show longitudinal thrust loads during segment erection. This assumes all segments are hung from the gantry which will be supported by the Pier segments. Design piers for gantry thrust loads during erection

e. Provide special construction notes for gantry.

   i. If gantry leg requires touchdown within a span, show assumed steps and distances of the gantry moves. Verify capacity of superstructure for this temporary gantry loading. Show assumed reaction magnitudes and locations in the plans.

   ii. Whether design assumes gantry loading is over the pier segments only.

   iii. Include notes associated with stabilizing pier segment to the top of the pier. Ensure that the plan size of the pier cap is sufficient to stabilize the pier segment with temporary shims or vertical PT. Show external brackets where necessary.

3. If erection utilizes underslung truss, provide the following:

   a. Show assumed underslung truss vertical and longitudinal loading on the structure on the Erection Drawings.

   b. Provide assumed weight (unloaded). Verify weight of truss is compatible with required strength, lifting capacity and deflection characteristics of truss.

   c. Design piers, foundations, bearings, etc. for all vertical and longitudinal loading during launching of the gantry or underslung truss.

   d. Provide sketch of temporary assumed bracing for underslung truss and attachment to either the pier or to the footing. Ensure footing is sized adequately to support temporary works or provide notes in drawings that additional temporary foundations are required for construction loading and provide assumed load.

   e. Verify temporary clearance envelopes between truss system and lower roadway.

Figure 20.9.2-2 Underslung Truss Details

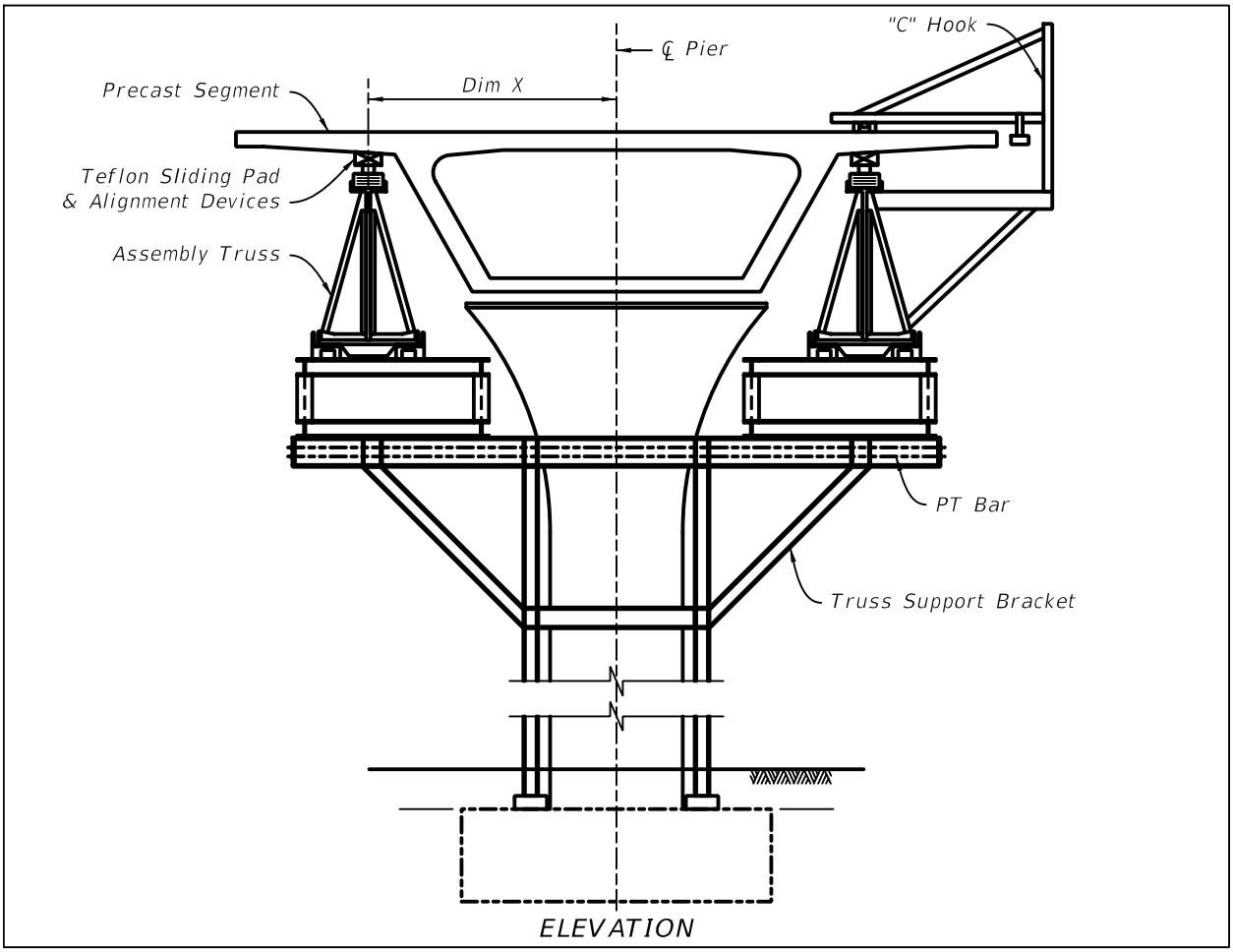

4. If erection utilizes top-down construction, where the segments are to be delivered by truck over previously erected spans to a crane, provide sketches showing the following:

   a. Sketch of the assumed erection crane in elevation view. Show width of outriggers extended and retracted. Show the magnitude and location of the assumed maximum crane reactions. Verify capacity of superstructure for this temporary load case.

   b. Sketch of the crane with the segment hauler in partial plan view. Show location of crane placing segments, location of the segment hauler, working radius of the boom, centroid of the outriggers, and any required longitudinal beams to support crane reactions.

Figure 20.9.2-3 Span by Span Top-Down Erection Details

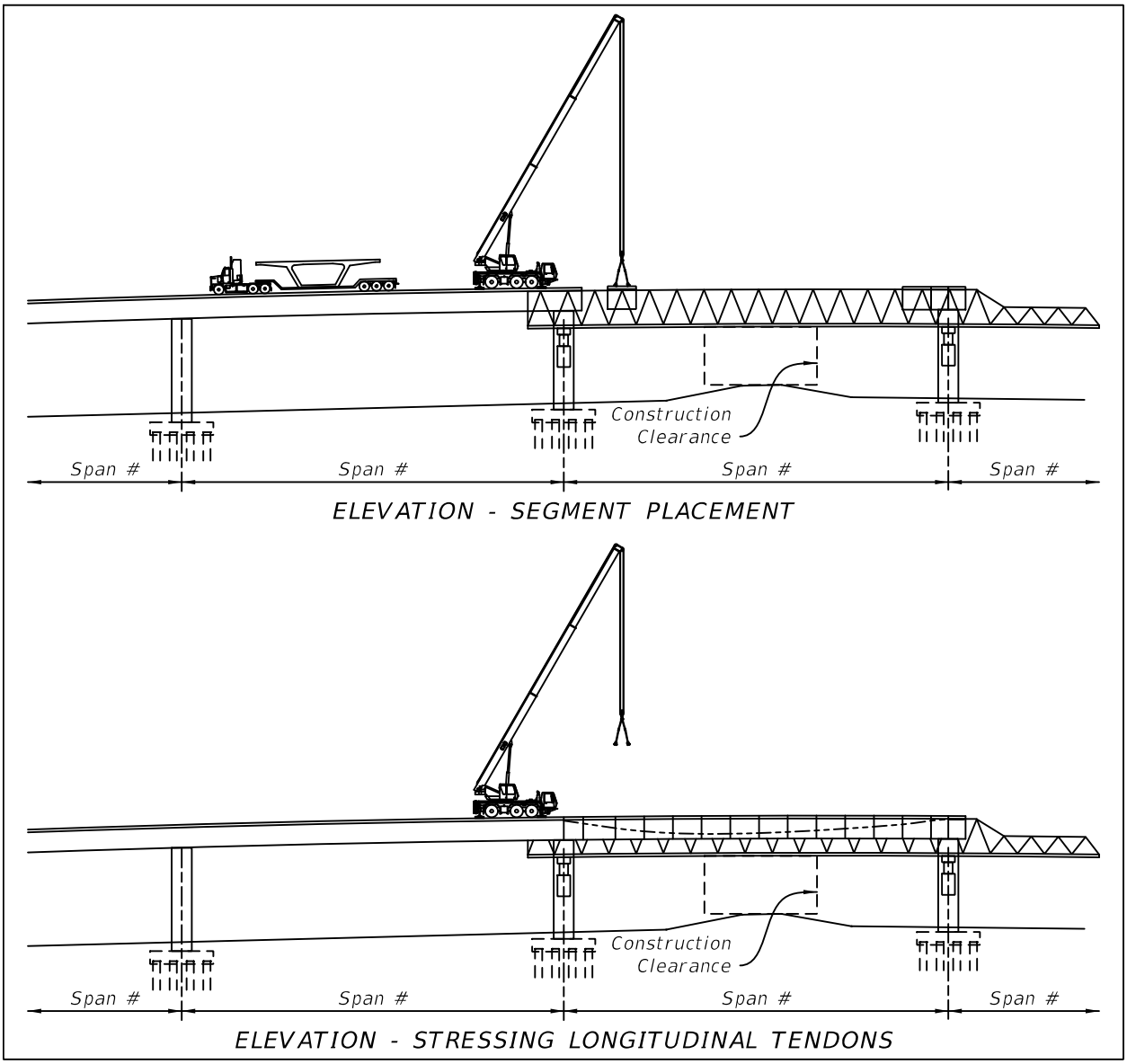

c. Verify punching shear in the deck from crane outriggers and provide/show longitudinal beams/crane mats as required.

d. Sketch of the assumed segment hauler. Include axle loads and axle spacing for empty weight of the hauler, weight of segment, and total assumed weight. Verify capacity of superstructure for this temporary load case.

Figure 20.9.2-4 Project Specific Truck and Axle Weight for Segment Transport

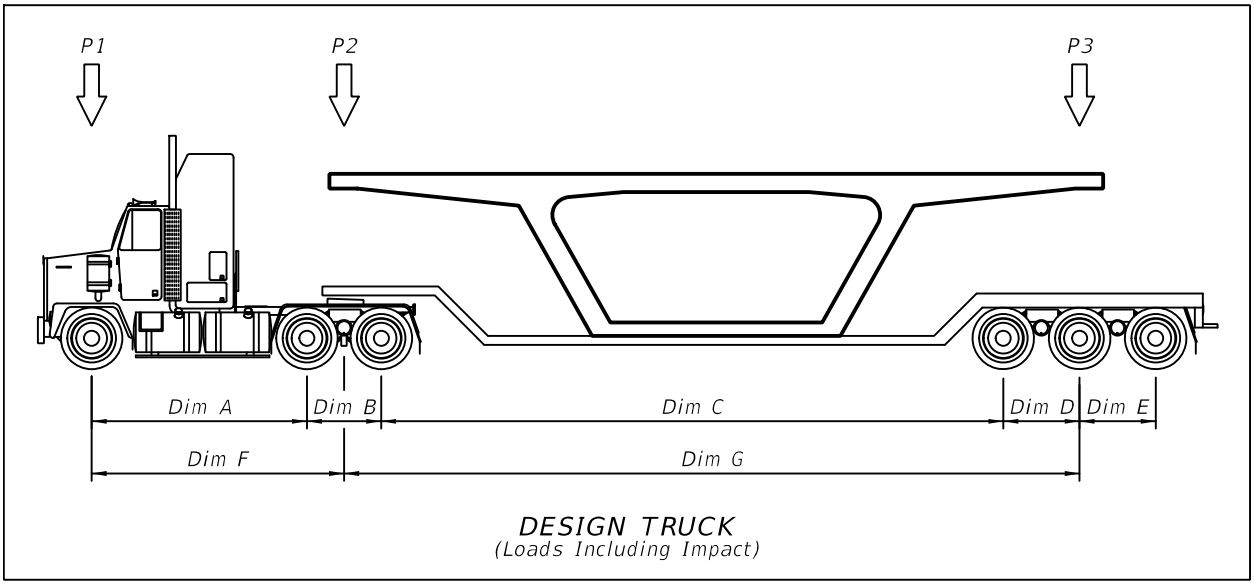

Figure 20.9.2-5 Truck Loaded with Segment

21 MOVABLE BRIDGES (Rev. 01/11)

21.1 Bascule Leaf Notes

21.1.1 General

A. As the first item under General, list the version of the AASHTO Specification, any interim(s), version of Structures Manual and subsequent Structures Design Bulletins used as the basis for the design of the plans.

B. Organize notes under headings for Design, Materials, Construction, etc.

C. Include all General Notes and Pay Item Notes specific to Bascule Leaf on the Bascule Leaf General Notes sheet.

D. Do not use General Notes or any other plan notes to repeat or modify requirements stated in the Specifications. If project specific modifications to the Specifications are required, prepare either a Modified Special Provision or a Technical Special Provision. Contact the District Specifications Office for guidance.

E. Never include proprietary information in a General Note or any other plan notes unless system compatibility is an issue and a signed Public Interest Finding (per FHWA requirements) is on file in the District Specifications Office. Do not specify a product or manufacturer name as this may give preferential treatment to the listed items. Do not use the term "or equal". Use performance criteria. Contact the District Specifications Office for guidance.

21.1.2 Bascule Leaf Notes

The following is a sample of Bascule Leaf notes to be included on the Bascule Leaf Notes sheet. Place these notes on the Bascule Leaf Notes sheet and modify for project-specific requirements. Text in Italics is notes to the designer. At a minimum, show the following information:

Design:

A. General:

1. Design of the Bascule Leaf Structure is in accordance with the American Association of State Highway and Transportation Officials (AASHTO) LRFD Bridge Design (YEAR) and interims through XXXX, FDOT Structures Design Guidelines (SDG) LRFD (YEAR) and the AASHTO LRFD Movable Highway Bridge Design Specifications (AASHTO Movable), XXX, and interims through XXX.

2. Dead Load Force Diagrams and Shear and Bending Moment Influence Lines for the Main Girders are provided in these Plans for use in future Load Rating and Overload Permitting. These diagrams are based on the assumptions stated herein.

3. See General Notes for additional information and requirements.

B. Design Loadings:

1. DEAD LOADS (For Structural Design and Balance Calculations):

Unit Weights (* = Use Actual Design values)	
Concrete (Lightweight for Exodermic Deck Slab, Haunches, Edge Beams, Curbs and Bridge Railing)	XXX pcf *
Concrete (Counterweight)	XXX pcf *
Steel	490 pcf
Aluminum	175 pcf
Deck Panels	XX.X psf *
Traffic Railing (Including Concrete and Steel)	XXX plf *
Pedestrian Railing (Excluding Concrete Curb)	XXX plf *
Future Wearing Surface	No allowance provided
Equipment	(Actual Estimated Weights)
Roadway Lighting Fixtures	(Actual Estimated Weights)

2. LIVE LOADS:

   a. HL93 (Designed for up to X concurrent Lanes)
   b. Sidewalk Live Load per AASHTO
   c. Impact per AASHTO and AASHTO Movable
   d. Distribution of Live Loads to the Main Girder is conservatively taken as follows:
      D.F. = X.X Lanes (From Center Lock to Forward Joint)
      D.F. = X.XX Lanes (From forward Joint to Rear Joint)

3. WIND LOADS:

   a. Per AASHTO and AASHTO Movable modified in accordance with the FDOT Structures Design Guidelines. (Verify with the US Coast Guard the wind speed at which the bridge is locked down.)
   b. For Roadway Lighting Fixtures the following Loads shall be assumed to be applied to the Bascule Leaf at the Base of the Fixture:

Longitudinal Moment	X.X kip*ft
Transverse Moment	X.X kip*ft
Longitudinal Shear	X.X kips
Transverse Shear	X.X kips
Torsion	X.X kip*ft

4. TEMPERATURE EFFECTS:

Seasonal Variation: Mean Temperature	70° F
Temperature Rise	40° F
Temperature Fall	40° F
Thermal Coefficient Steel	0.0000065/°F
Thermal Coefficient Concrete	0.000006/°F

5. LOADING COMBINATIONS:

   Per AASHTO, AASHTO Movable and SDG

6. PERMIT LOADING:

   Evaluated for X lanes of traffic for design inventory and FL120 permit loading assuming span locks are engaged (driven) to transmit Live Load to opposite leaf. In addition, evaluate for strength I design operating rating assuming the span locks are not engaged to transmit Live Load to the opposite Leaf.

7. FATIGUE:

   The number of cycles of maximum stress range to be used for Design was determined using X Lane Uni/Bidirectional Traffic on Each Bridge.

   AADT (Year) = XX,XXX (Unidirectional, X Lanes)

   T (Percentage of Trucks) = X.X

   Annual Traffic Growth Rate (Assumed) = X.X%

   Live Load D.F. = X.X Truck

   Single Lane Factor = X.XX

C. Design Assumptions:

1. CACULATION OF SECTION PROPERTIES:

   a. Indicate if the deck was considered composite in the design and under what loads (Dead Load, Superimposed D.L. & L.L., etc.).

   b. Indicate if composite section properties were used for estimating deflections/ camber and strength/service limit state capacities.

2. DEFLECTION LIMITS:

   a. Per AASHTO with the following clarifications:

      i. Live Load deflection of the Bascule Leaf Main girders shall be limited to L/375 where:

         L = Distance from CL Span to CL Live Load Shoe

      ii. Live Loads shall be considered equally distributed to both Main Girders

      iii. Both Center Locks were not engaged.

      iv. Only X Traffic Lanes Loaded on the Leaf for Live Load Deflection Calculations.

3. MEMBER CONNECTIONS:

   The connection of the Floor Beams and the counterweight box to the Main Girders was considered moment resisting connection.

4. MATERIALS:
   a. CONCRETE:
      i. Concrete for the Bascule Leaves shall be in accordance with Section 346 of the Specification. The following concrete shall be used: (Use actual design Strength and Concrete properties)

Location	Class	f'c	Ec	Unit Weight[1]
Exodermic Bridge Deck (Sand Lightweight Structural Concrete)[2]	IV	5.5 ksi	3020 ksi	115 pcf ± 3 pcf
Counterweight (Main box Girders and Counterweight Tubs)	II	3.4 ksi	3020 ksi	145 pcf ± 1.5 pcf

1 Strict control on the init weight is required for Span balance considerations. See Section 465 of the specifications for unit weight testing requirements.

2 Concrete Unit Weight shall be achieved utilizing a lightweight aggregate. The unit weight of sand lightweight structural concrete is critical to the balancing of the movable span. Deviations beyond the tolerances shown will not be permitted and may require removal/replacement at no additional cost to the Department.

f'c Denotes minimum 28-day compression strength

Ec Denotes Modulus of Elasticity at 28 days with specified unit weight.

      ii. See the General Notes and Specifications for other detailed material requirements.

D. Construction:
   1. SPAN BALANCE:
      a. Balance of the Bascule Leaves in the close position shall be the following parameters: (Use actual design values)
         i. WL COS α = 340k*ft + 51 k*ft, -0 k*ft (Towards the leaf tip)
         ii. Alpha = 20 Degrees to 50 Degrees
         iii. Where WL COS α Denotes span unbalance moment (i.e., W*L COS α)
         iv. W Denotes the total leaf weight
         v. L Denotes the distance from CL Trunnion to C. G. of Leaf.
         vi. Alpha Denotes the angle of inclination of the center of gravity above a horizontal line through the trunnion when the lead is closed. (in Degrees).
      b. Contractor is responsible for determining the final adjustments to the counterweight to achieve the proper balance of the leaves. See Technical Special Provisions for detailed span balance requirements, submittals and permissible methods for adjusting the counterweight center of gravity location.
      c. Bascule Leaf Fabrication, Erection and Alignment: See the Technical special provisions for detailed requirements. Design and Construction of Temporary restraints required during field erection of the Bascule Leaf shall be in

accordance with Article 7-11 (Preservation of Property), Division I, General Requirements and Covenants, of the Standard Specifications. The restraints shall be designed to resist loads per AASHTO Movable Specifications, treating the span as "Normally left in the closed position".

2. EXODERMIC BRIDGE DECK:

See the Technical Special Provisions for detailed requirements (Use actual design values)

Live Load Shoe Reaction Summary (kip)	
Loads	Span Closed (0°)
Dead[1]	10
Live[2]	1212
Impact	265
Note: Reactions are maximum and per Main Girder	

1 Based on required unbalanced reaction after span balancing.
2 Based on HL93 Live Loading with three Lanes Loaded at 85% Multilane - Presence Factor

3. TRUNNION REACTION SUMMARY (Use actual design values)

Trunnion Reaction Summary (kip)				
Loads	**Span Closed (0°)**		**Span Full Open (67°)**	
	Horiz.	**Vert.**	**Horiz.**	**Vert.**
Dead	-	1323 (A)	-	1323 (A)[1]
	-	1301 (O)	-	1301 (O)
Min. Live[2]	-	-950	-	-
Impact	-	-217	-	-
Max. Live[3]	-	75	-	-
Impact	-	23	-	-
Wind[4]	-	-	398	122
Note: Reactions are maximum and per Main Girder				

1 Includes 20% Dynamic Load Allowance. Both center locks engaged.
2 Based on HL93 Live Loading with three Lanes Loaded at 85% Multilane - Presence Factor without both center locks engaged.
3 Based on HL93 Truck Load w/Two Lanes Loaded.
4 Longitudinal Direction: 24 psf of base wind pressure acting on the projected area. The base pressure corresponds to elevation 30.0, and was adjusted to design elevation per AASHTO LRFD Section 3.8. The adjusted average wind pressure is 34.2 psf acting at 53.2' above Trunnion.

4. JACKING NOTE:

   Jacking reactions shown are for locations shown and are per Main Girder. Jacking columns (Not in Contract) will be required under each web of Main Girder at CTC Diaphragm. Future Jacking shall be performed without traffic on Bascule Span. Traffic may be returned to the span after Jacks are safely locked and the Leaves are secured.

21.2 Bascule Steel Girders

21.2.1 General

A. Structural steel drawings will be used by used by fabricators and contractors for the production and erection of structural steel members.

B. Check AISC on-line database of available structural steel shapes before specifying a particular steel shape and size. Preference should be given to shapes and sizes with multiple producers due to increased availability and lower cost.

21.2.2 Framing Plan Drawings

Framing plans are required for all bascule spans. At a minimum, show the following information:

A. Lateral bracing.

B. The distance between girders (centerlines).

C. The distance from the baseline/ centerline of construction to adjacent girder.

D. The distance between floorbeams (centerlines).

E. Dimension to center line of field splice from the centerline of trunnion.

F. Diaphragms, trunnion girders, stringers and overhang bracket locations.

G. Temporary bracing required for construction.

H. Girder/floorbeam numbering (Number in ascending order from the tip to the tail)

I. Direction of stationing.

J. Locate centerline of trunnion and live load shoe along baseline.

K. North arrow.

L. Direction of stationing adjacent to the baseline, if necessary.

M. Counterweight girders/ tubs and counterweight concrete/adjustment pockets along span.

N. Longitudinal, transverse, forward, and rear joints.

O. Fender system and centerline of channel.

P. Centerline of bascule span.

Q. Limits of decking.

R. Centerline of top of web. (Do not show width of top flange) (Box Shapes)

Figure 21.2.2-1 Framing Plan

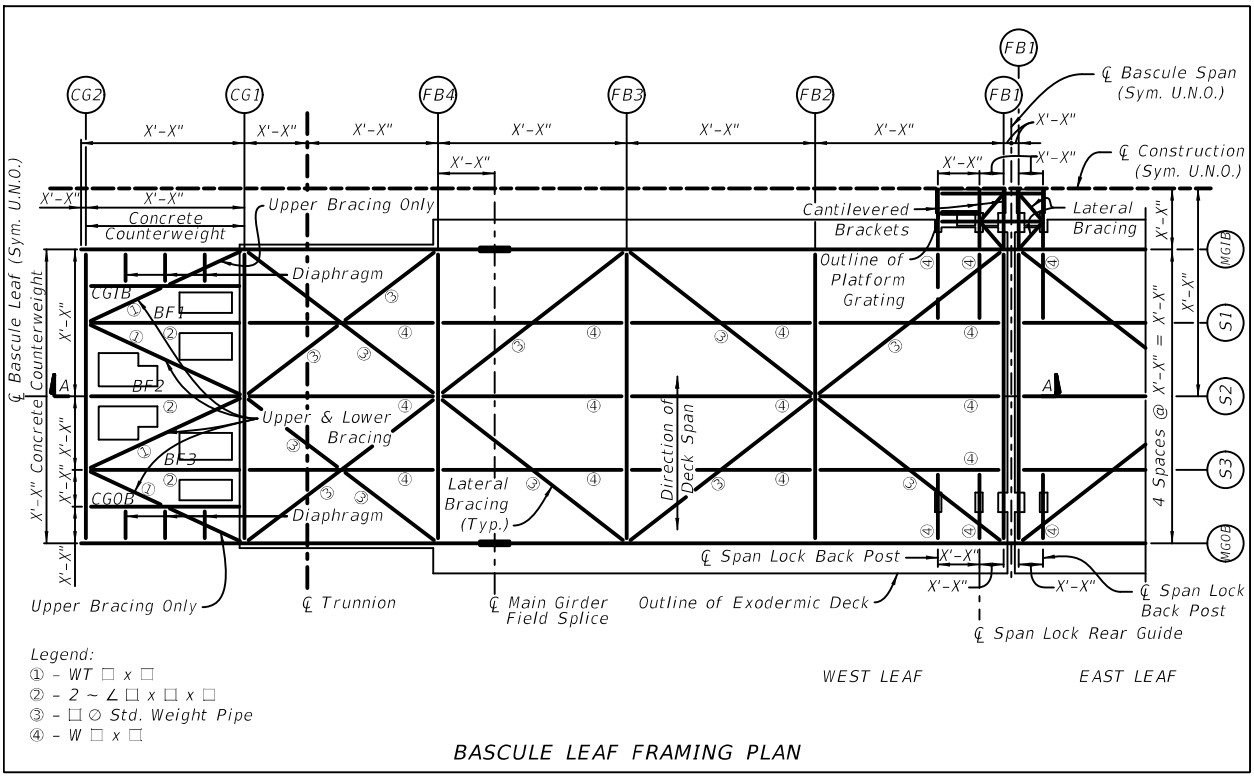

21.2.3 Longitudinal Section Drawings

At a minimum, show the following information for each section:

A. Elevation view of girder.

B. The centerline of trunnion and live load shoe along the Station Line.

C. Trunnion elevation.

D. Floor beams (centerlines) along bascule leaf.

E. Access openings.

F. Bracing locations.

G. Dimension field splices to centerline of trunnion.

H. Angle from centerline of trunnion (horizontal) to centerline of pinion shaft at closed position. Provide angle between the pinion in the open and closed position in relation to centerline trunnion.

I. Counterweight girders/ tubs and adjustment pockets.

Figure 21.2.3-1Longitudinal Section

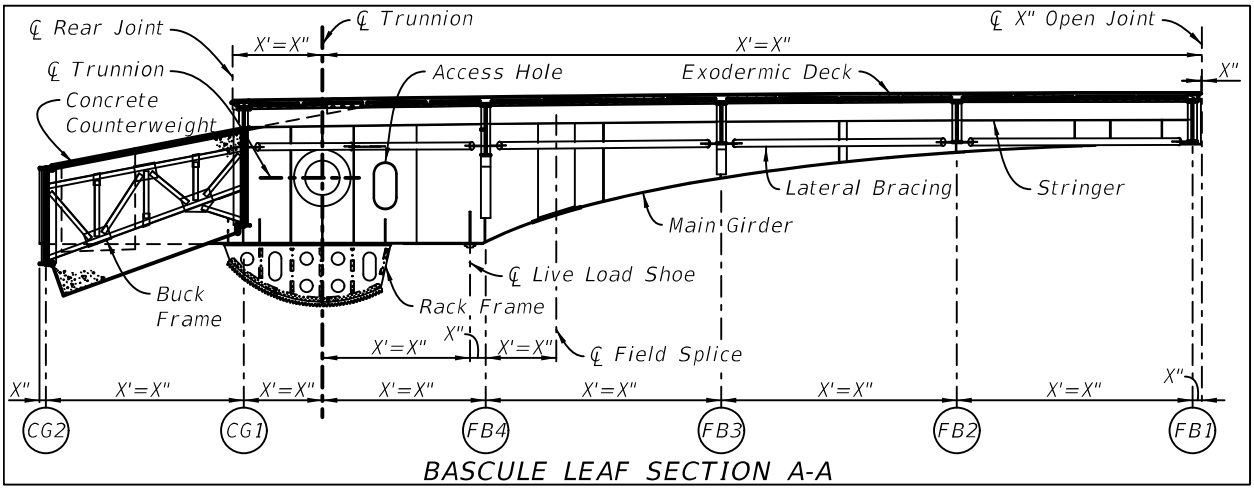

21.2.4 Transverse Section Drawings

Show transverse section of the leaf at each unique floorbeam. At a minimum, show the following information for each section:

A. Dimensions for traffic railing widths, shoulder widths, lane widths, bike lane widths, sidewalks, median width and overall width.

B. Dimension girder to girder spacing and inside girder to centerline of bascule leaf

C. Overhang distance to the centerline of girder.

D. Traffic Railing type. If more than one traffic railing is used (median, railing, etc.) indicate each applicable type.

E. Slab thickness.

F. Centerline of bascule leaf.

G. Centerline of centering device and span locks at FB1.

H. The identification of girders/floorbeams on the Framing Plan consistent with detail sheets.

I. Station Line, PGL, workpoints, cross slope.

J. For box main girders, dimension centerline of web to centerline of girder.

K. Controlling web heights across floor beam.

L. Provide thickness of floorbeam web, flanges, stiffeners and size of connection plate and bottom flange stiffeners.

M. Access openings, access hatches, span lock assemblies, centering devices, rack assembly etc as applicable.

N. Longitudinal joints.

O. Conduit locations.

P. Bracing.

Q. For box main girders, show diaphragms, internal cross frames, diaphragm openings, and longitudinal stiffeners etc as applicable.

Figure 21.2.4-1Transverse Section Drawings

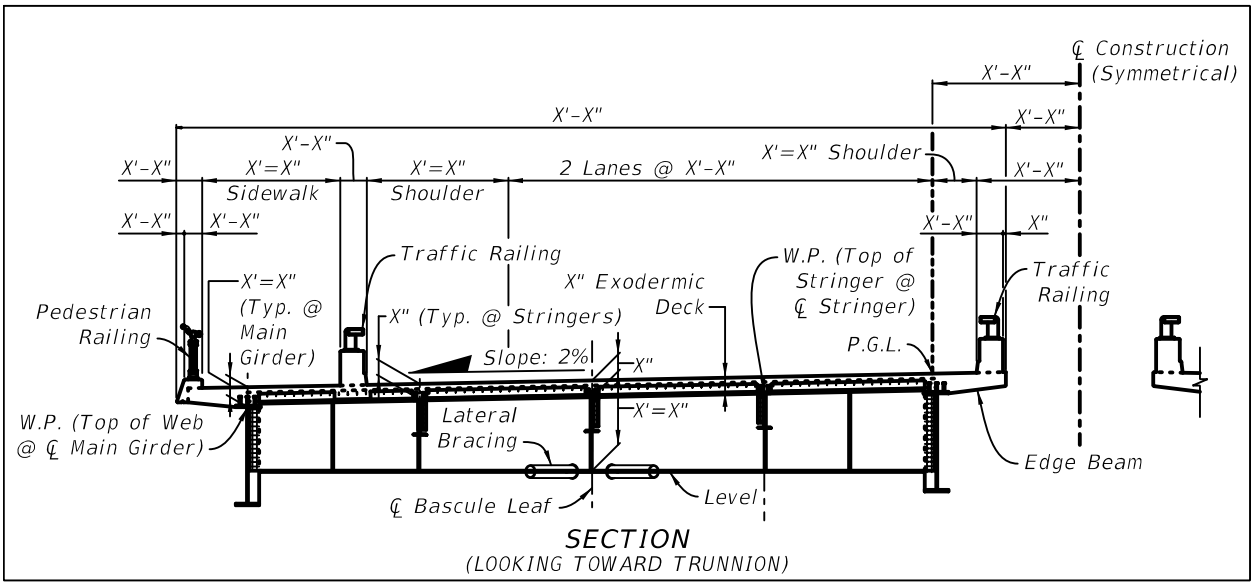

21.2.5 Main Girder Elevation Drawings

Main Girder Elevation sheets are required bascule spans. Detail main girder elevation from tail to tip, going left to right. At a minimum, include the following on the Main Girder Elevation sheet:

A. Elevation view of girder. Provide matchlines for girders that require more than 1 sheet.

B. Top/Bottom view of girder (As required). For box main girders, show lateral bracing in top view and show longitudinal stiffeners in bottom view.

C. Shear connector spacing along centerline of girder (centerline of box for box girders).

D. Flange plate sizes.

E. Web plate size.

F. Weld sizes and types. Reference welding symbols at www.aws.org.

G. Field splices.

H. Shop splices. Designate optional splices as required.

I. Plates to be Charpy V-Notch (CVN) tested shall be identified. Indicate Fracture Critical Members by notation (FCM).

J. Dimensions for length along centerline girder as follows:

   1. From girder end to centerline of bascule span.
   2. From girder end to centerline of trunnion and from centerline trunnion to centerline of live load shoe.
   3. Distance between centerline of bascule span and tip of girder.
   4. Between centerline(s) of floorbeam(s) and field splice(s).

5. Girder section changes. Show this dimension for top flange, bottom flange or web section changes.
6. Limits of flange tension and stress reversal zones.

K. Show and dimension any penetrations in the web for conduits, external attachments, etc.

L. Transverse stiffener spacing.

M. Lateral bracing spacing.

N. The distances between floorbeams (centerlines or extensions) measured along the centerline of trunnion.

O. Dimension limits of machining or add separate details.

P. Dimension centerline of span lock guides.

Q. Access opening/hatch locations and spacing.

R. Location and spacing for fill holes, vent holes and drain holes.

S. Show limits of longitudinal stiffeners.

T. In plan view, show centerline of top of web.

U. Show welded shear stud spacing as applicable.

Figure 21.2.5-1Main Girder Partial Elevation Drawing

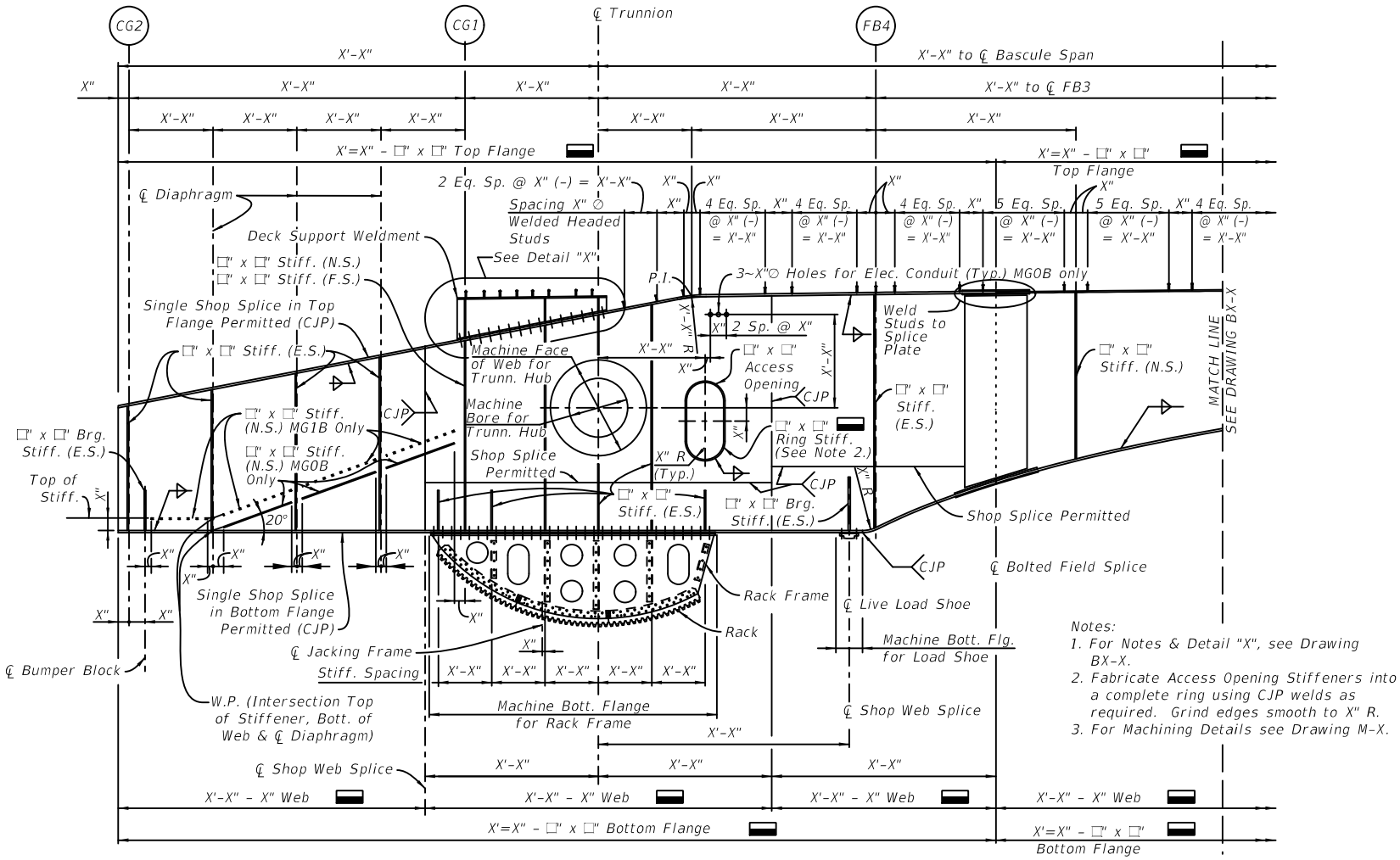

21.3 Rack Assembly And Details

21.3.1 General

A. This chapter covers the design plan details required to construct and install curved racks for bascule bridges.

B. Rack assembly and detail sheets will include all the details necessary to fabricate, assemble, and mount the racks.

21.3.2 Rack Details

At a minimum, the rack detail should include the following:

A. Tooth form and number of teeth

B. Pressure angle and diametral or circular pitch

C. Addendum, dedendum, and face width

D. Pitch radius or diameter

E. Outside radius or diameter and root radius or diameter

F. Tooth thinning for backlash

G. Any required tip relief

H. Define the shape of the gear teeth in the axial direction noting any required lead curve or tooth crowning

I. Chordal addendum and chordal tooth thickness

J. AGMA gear quality number

K. Surface finishes

L. Material designation and hardness

M. Pitch line scribe on both sides of teeth

N. Angular length of rack segment(s)

O. Type, size, and location of stiffeners

Figure 21.3.2-1Rack Details

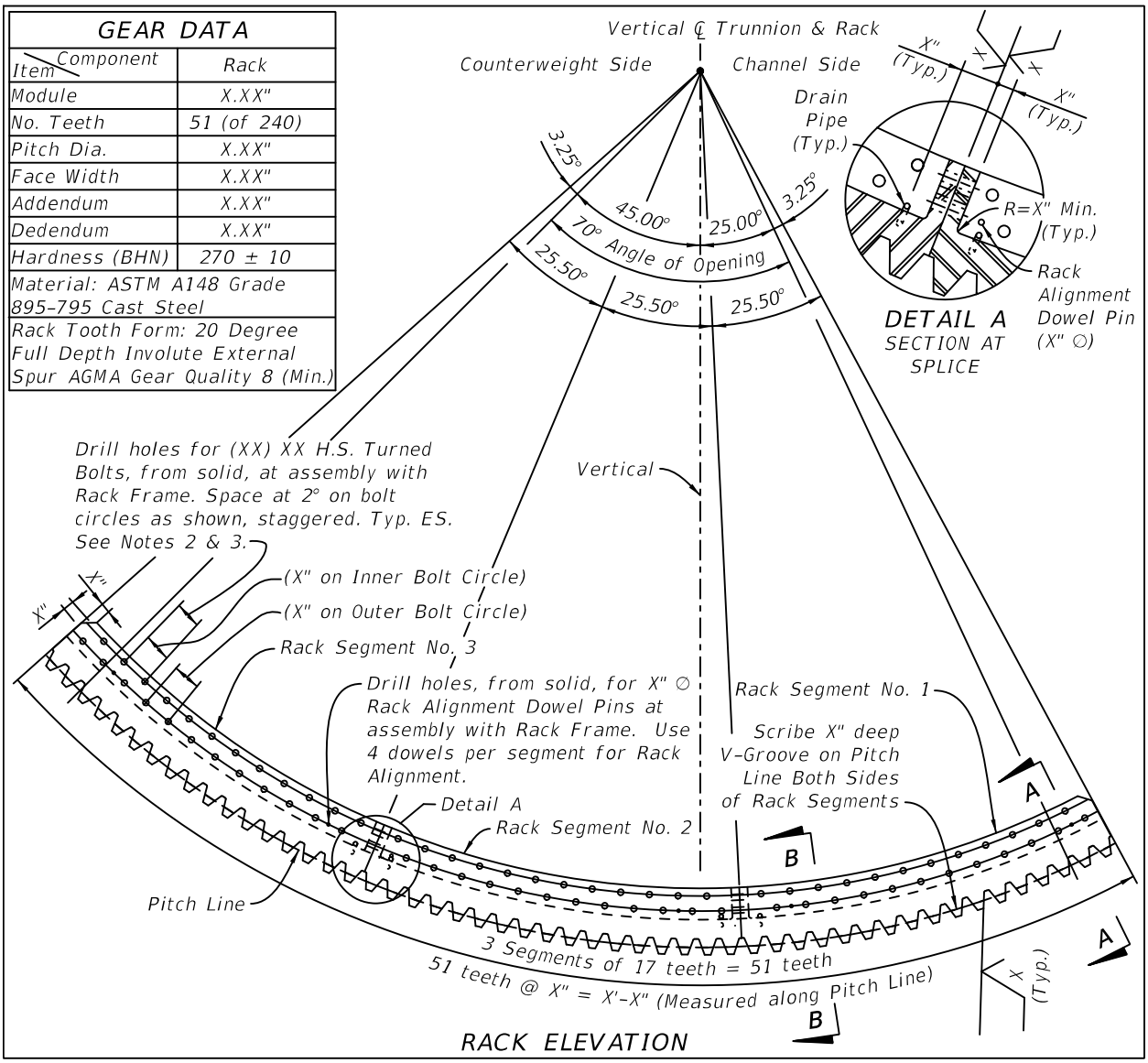

21.3.3 Rack Assembly

At a minimum, the rack assembly information should include the following:

A. Type, size, locations, and quantity of all fasteners and welds required to assembly the rack and mount it to the girder

B. Add a note to caution against tolerance stacking in case of bolt holes

C. Bascule girder machining details

D. Relative position of rack to trunnion

E. Relative position of pinion to rack with the bascule leaf open and closed

F. Shim pack details

G. Size, location, and quantity of access holes

Figure 21.3.3-1Rack Assembly

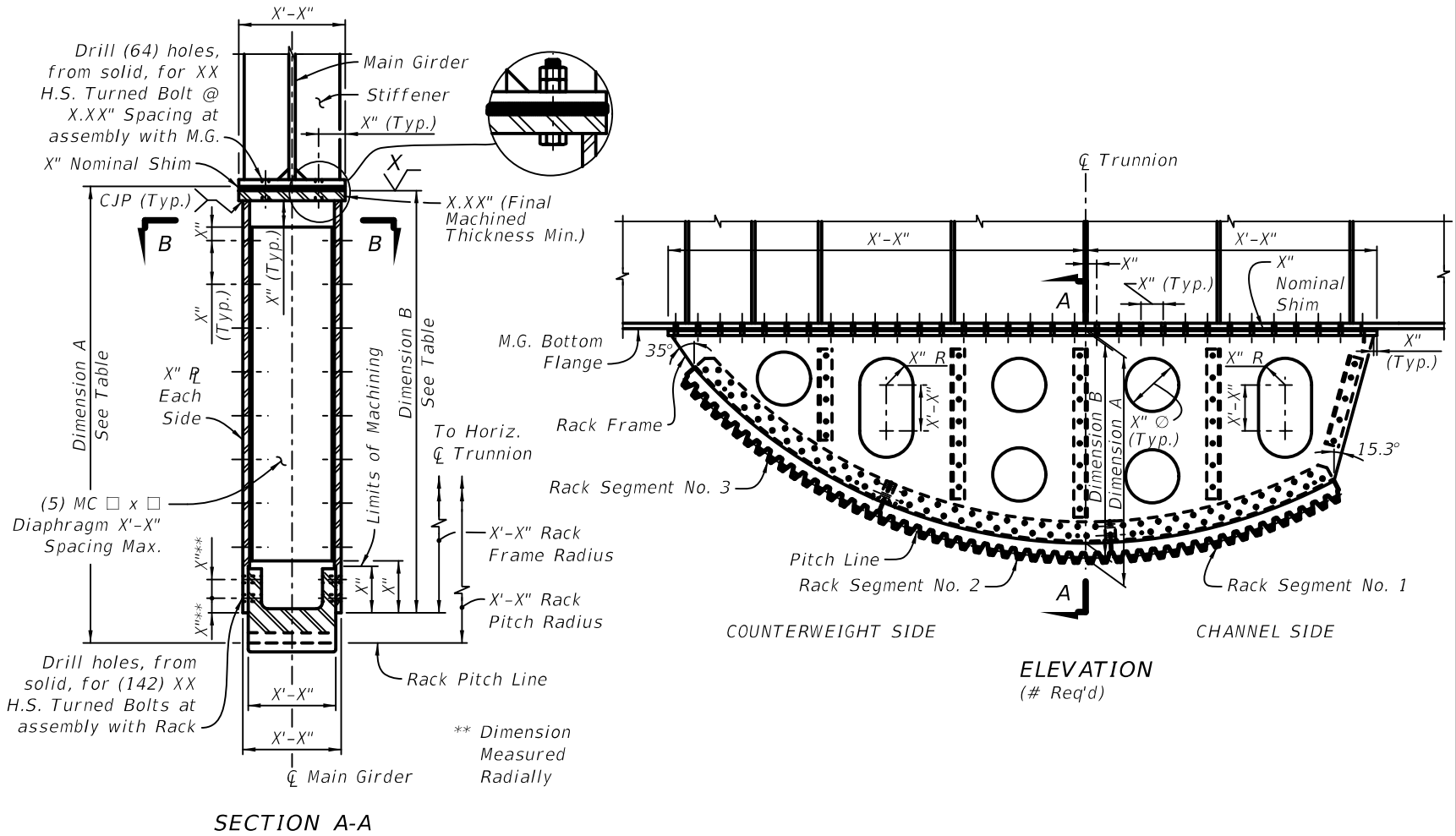

21.3.4 Rack Assembly Design Considerations

The following issues should be addressed when detailing the rack assemblies:

A. The rack should bolt to the bottom flange of the bascule girder.

B. The rack should rotate concentrically about the trunnion shaft.

C. The bottom flange of the bascule girder may not provide a flat perpendicular surface for mounting the rack.

D. The rack frame should deflect minimally under load throughout its range of motion.

E. Ease of fabrication and adjustability of the rack.

F. Accessibility of fasteners.

G. Debris accumulation and drainage of the rack frame.

H. Ease of installation and maintenance with consideration given to rack frame accessibility for inspection, cleaning, and painting.

I. Effects of out-of-plane distortion of main girders and rack assemblies during counterweight concrete placement. Include a plan note requiring the counterweight box to be shored during counterweight concrete placement.

21.4 Rack Pinion, Bearing Supports and Bearing Details

21.4.1 General

A. This section covers the design plan details required to construct and install rack pinions, pinion bearings, and bearing supports for bascule bridges.

B. Rack pinion, pinion bearing, and bearing support detail sheets will include all the details necessary to fabricate, assemble, and mount the rack pinions and bearings.

21.4.2 Rack Pinion Details

At a minimum, the rack pinion details should include the following:

A. Tooth form and number of teeth

B. Pressure angle and diametral or circular pitch

C. Addendum, dedendum, and face width

D. Pitch radius or diameter

E. Outside radius or diameter and root radius or diameter

F. Tooth thinning for backlash

G. Any required tip relief

H. Define the shape of the gear teeth in the axial direction noting any required lead curve or tooth crowning

I. Chordal addendum and chordal tooth thickness

J. AGMA gear quality number

K. Surface finishes

L. Material designation and hardness

M. Pitch line scribe on both sides of teeth

N. Pinion shaft length, inside and outside diameter

O. Pinion shaft fits and finishes

P. Number and location of keyways

Q. Keyway fits and finishes

R. Keyway length, width, depth, and radiuses

Figure 21.4.2-1Pinion Details

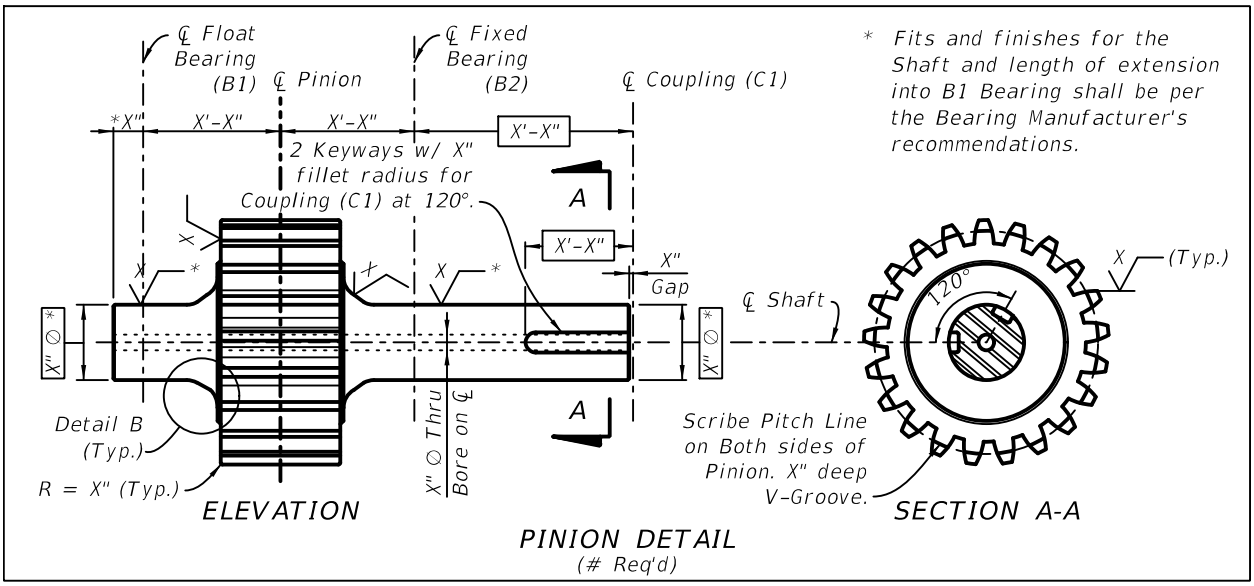

21.4.3 Pinion Bearing Details

A. For sleeve type pinion bearings, the pinion bearing details should include, at minimum, the following:

1. Material designations for bronze sleeves and bearing housing
2. Inside and outside diameter of bushings
3. Bushing and housing fits and finishes
4. Bushing length and flange details

5. Grease groove details
6. Bearing liner details
7. Size, location, and quantity of fasteners
8. Bearing cap lifting eye details

Figure 21.4.3-1Pinion Bearing

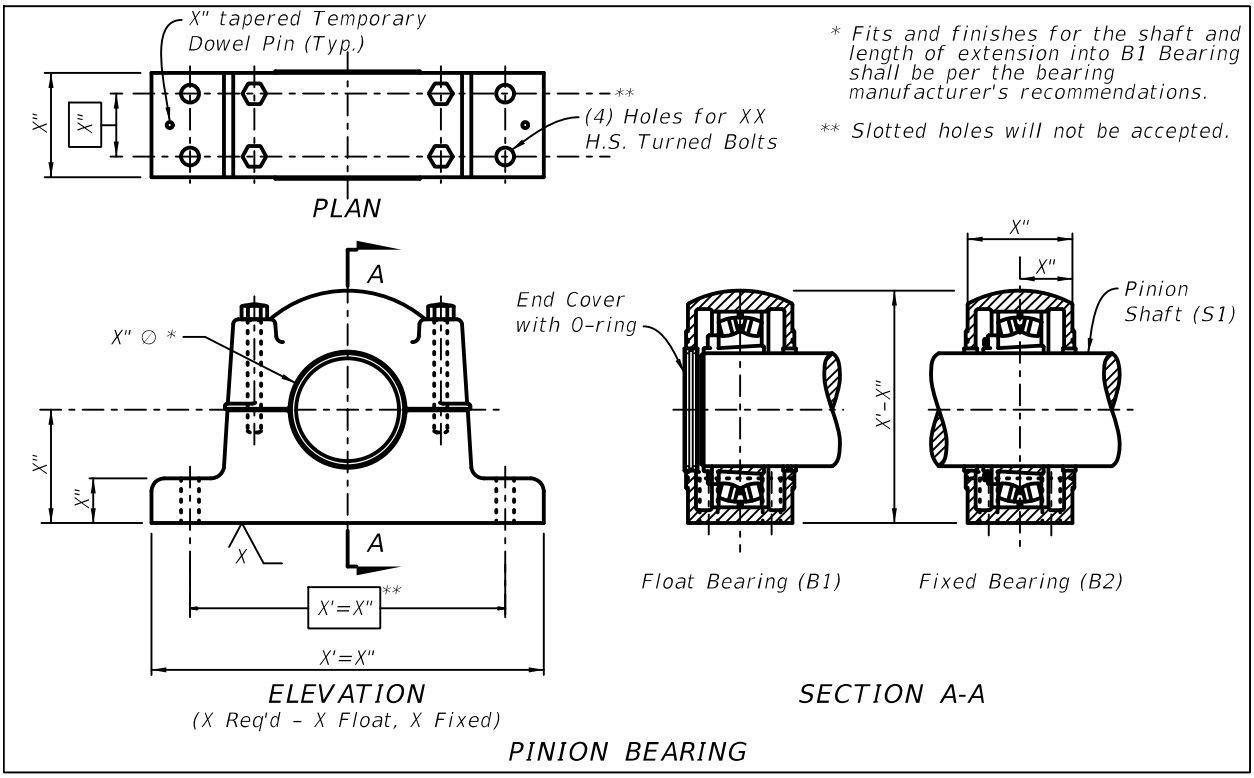

B. For anti-friction roller type pinion bearings, the pinion bearing details should include, at a minimum, the following:

1. Bearing type and size
2. Bearing housing envelope dimensions
3. Designation of expansion or non-expansion bearings
4. While bearing will be supplied without mounting holes, the size and location of the mounting fasteners and dowels will be shown
5. Surface finish for mounting surface
6. Bearing load diagram

21.4.4 Pinion Bearing Support Details

At a minimum, the pinion bearing support detail should include the following:

A. Nominal dimensions, tolerances, flatness, perpendicularity, parallelism, and finishes

B. Indicate clips of proper size at corners of stiffeners and edge clearance for stiffeners

C. Designate welds

D. Size and locate fastener holes for machinery and anchors

E. Anchor details

F. Indicate base preparation for grouting including vent holes and jacking screws

G. Indicate drain holes

H. Material designation and member thicknesses

I. Shim details

21.4.5 Rack Pinion Assembly Design Considerations

The following issues should be addressed when designing and detailing the rack pinion assembly:

A. Ease of fabrication

B. Accessibility of fasteners and anchors

C. Debris accumulation and drainage

D. Weldability, strength of welds, and stiffness of assembly

E. Room for hydraulic anchor tensioning equipment

F. Bearing lubrication

G. Bearing should be placed close to the points of loading and located so the applied bearing pressure will be as uniform as possible

21.5 Trunnion Assembly, Bearing Supports and Details

21.5.1 General

A. This chapter covers the design plan details required to construct and install trunnion shafts, trunnion hubs, trunnion bearings, and trunnion bearing supports for bascule bridges.

B. Trunnion assembly, bearing supports, and detail sheets will include all the details necessary to fabricate, assemble, and mount the trunnion assemblies.

21.5.2 Trunnion Assembly Details

Trunnion assemblies shall be designed to transfer span loads to the bascule pier. At a minimum, the trunnion assembly details should include the following:

A. Trunnion shaft details

B. Hub details

C. Backing ring details

D. Dowel details

E. Fastener details

F. Alignment plug details

G. Material designations and hardness

H. Trunnion shaft, hub, and girder fits and finishes

I. Girder machining details

J. Trunnion deflection diagram

Figure 21.5.2-1Trunnion Assembly

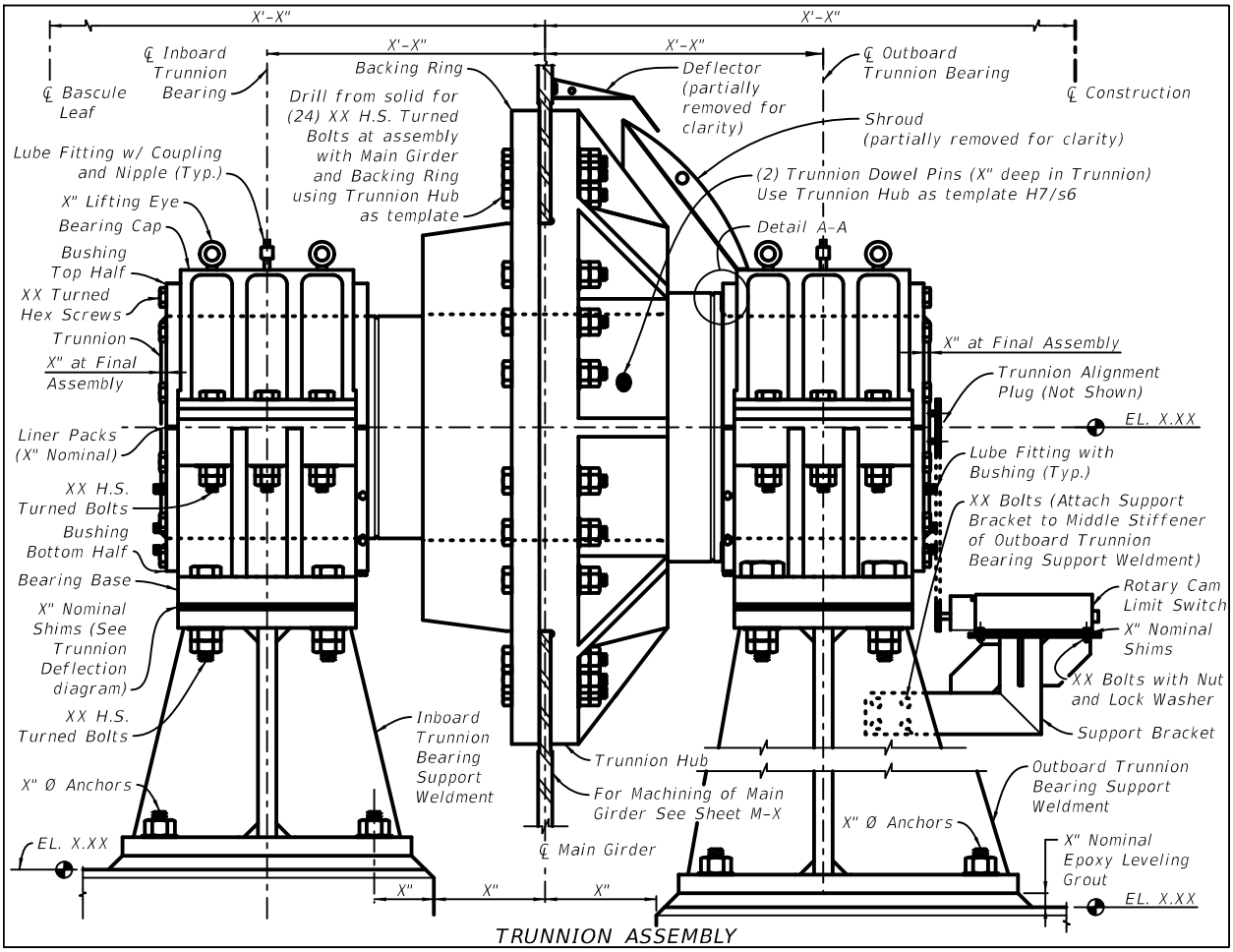

21.5.3 Trunnion Bearing Details

A. For sleeve type trunnion bearings, the trunnion bearing details should include, at minimum, the following:

1. Material designations for bronze sleeves and bearing housing
2. Inside and outside diameter of bushings
3. Bushing and housing fits and finishes
4. Bushing length and flange details
5. Grease groove details
6. Bearing liner details
7. Size, location, and quantity of fasteners
8. Bearing cap lifting eye details
9. Thrust gap dimension

B. For anti-friction roller type trunnion bearings, the trunnion bearing details should include, at a minimum, the following:

1. Bearing type and size
2. Bearing housing envelope dimensions
3. Designation of expansion or non-expansion bearings
4. While bearing will be supplied without mounting holes, the size and location of the mounting fasteners and dowels will be shown.
5. Surface finish for mounting surface
6. Thrust gap dimension

21.5.4 Trunnion Bearing Support Details

At a minimum, the trunnion bearing support detail should include the following:

A. Nominal dimensions, tolerances, flatness, perpendicularity, parallelism, and finishes

B. Indicate clips of proper size at corners of stiffeners and edge clearance for stiffeners

C. Designate welds

D. Size and locate fastener holes for machinery and anchors

E. Anchor details

F. Indicate base preparation for grouting including vent holes and jacking screws

G. Indicate drain holes

H. Material designation and member thicknesses

I. Shim details

21.5.5 Trunnion Assembly Design Considerations

The following issues should be addressed when detailing the trunnion assemblies:

A. Ease of fabrication and order of assembly

B. Accessibility of fasteners and anchors

C. Debris accumulation and drainage

D. Weldability, strength of welds, and stiffness of assembly

E. Room for hydraulic anchor tensioning equipment

F. For sleeve bearings, the trunnion shaft should have a thrust surface for the bearing bushing.

G. For sleeve bearings, the trunnion shaft should extend ½" beyond the face of the bearing bushing.

H. Do not use keys between the trunnion shaft and hub.

I. Provide shoulders with fillets of appropriate radius and provide clearance for thermal expansion between shoulders and bearings.

J. Provide a 2-inch long counter bore concentric with the trunnion journals at each of the hollow trunnion ends.

K. In addition to the shrink fit, drill and fit dowels of appropriate size through the hub into the trunnion after the trunnion is in place.

L. Provide Hubs and Rings with a mechanical shrink fit.

M. Bearing lubrication

N. Bearing should be placed close to the points of loading and located so the applied bearing pressure will be as uniform as possible.

21.6 Machinery Layout and Elevation

21.6.1 General

A. This chapter covers the design plan details required to show the machinery layout and elevations for bascule bridges.

B. Machinery layout and elevation sheets will include all the details necessary to illustrate the position and orientation of equipment.

21.6.2 Machinery Layout and Elevation Details

The machinery layout and elevation sheets should show the span drive machinery and trunnion assemblies on the bascule pier. All permanent structures should be shown relative to the machinery. The outline of the bascule pier and access platforms should be shown in both plan and elevation views. All machinery components should be clearly

shown and labeled. Elevations should be indicated for machinery platforms, pinion shafts, trunnion platforms, and trunnion shafts. Relative locational dimensions should be shown for major pieces of equipment. Verify 30" service clearance around drive system components.

Figure 21.6.2-1Machinery Partial Elevation

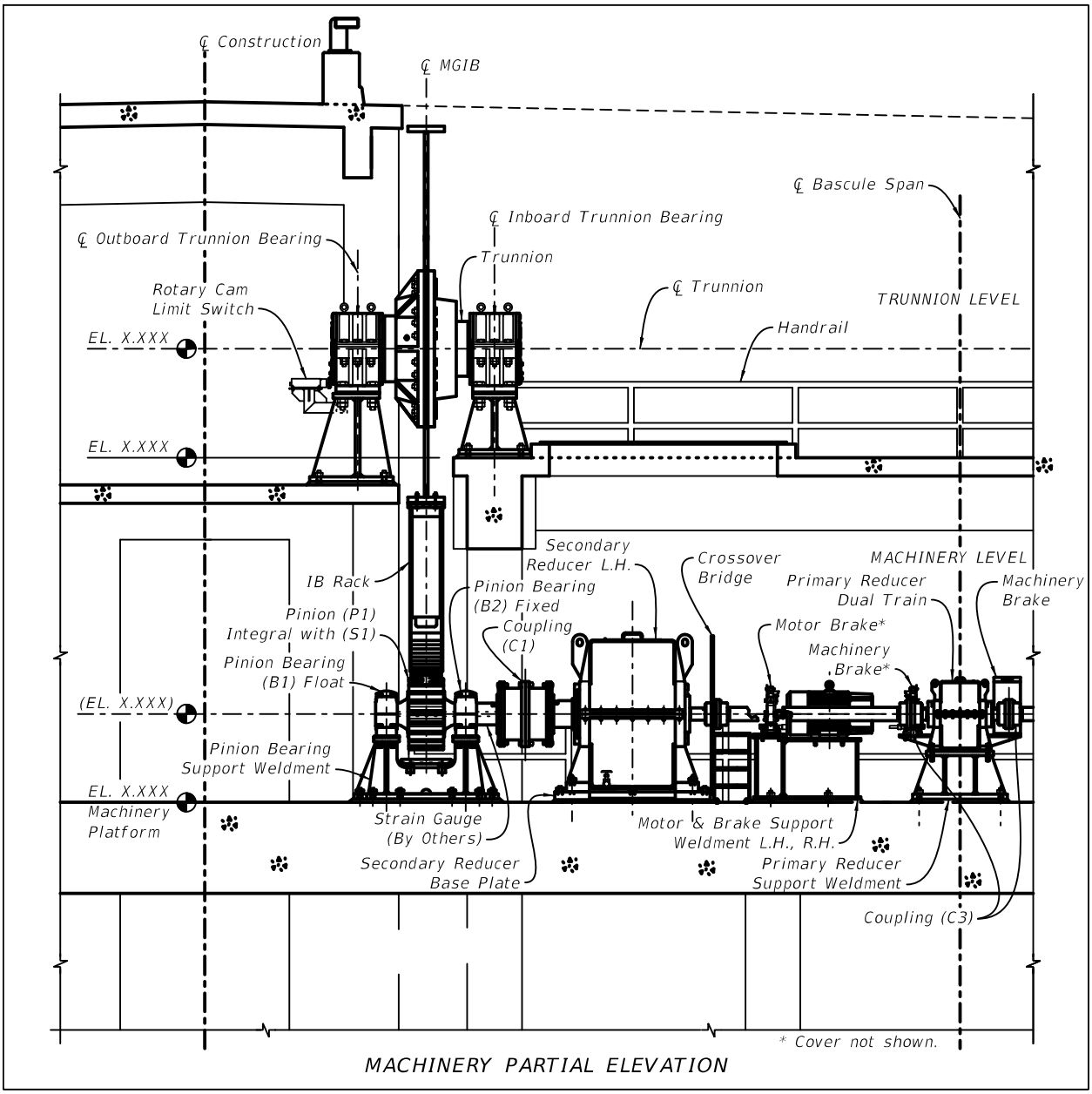

21.7 Submarine Cable

21.7.1 Submarine Cable Detail Drawings

The following is a sample of Submarine Cable notes to be included on the Submarine Cable Details sheet. Place these notes on the Submarine Cable Details sheet and modify for project-specific requirements. At a minimum, show the following information:

A. Dimensions shown are for reference only. Size components per project requirements.

B. Provide all Stainless Steel (ANSI 316) hardware.

C. Permanently seal all submarine cable penetrations from water intrusion.

D. Provide sub-cable supports per manufacturer recommendation for each submarine cable.

Figure 21.7.1-1Typical Submarine Cable Terminal Cabinet

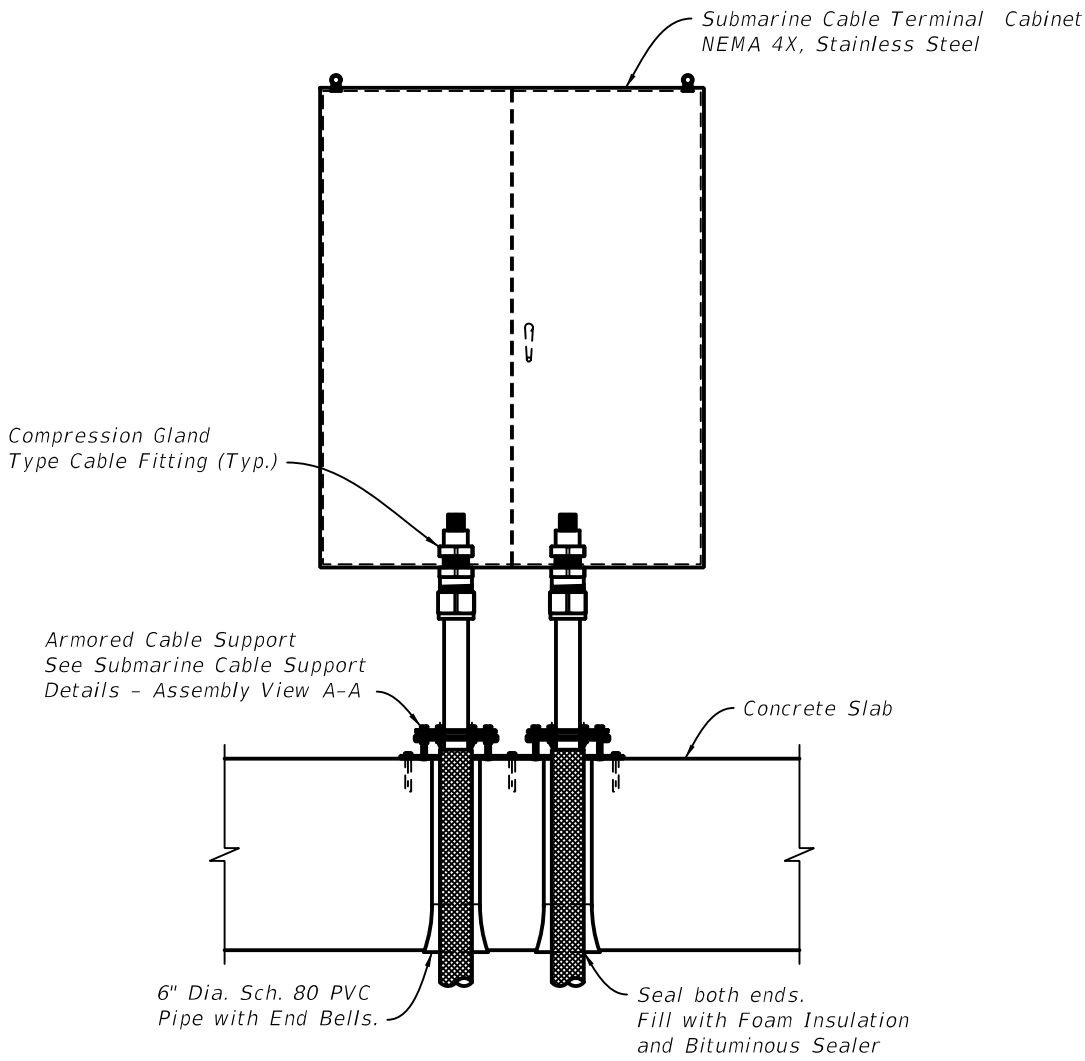

TYPICAL SUBMARINE CABLE TERMINAL CABINET

Figure 21.7.1-2Submarine Cable Support Details

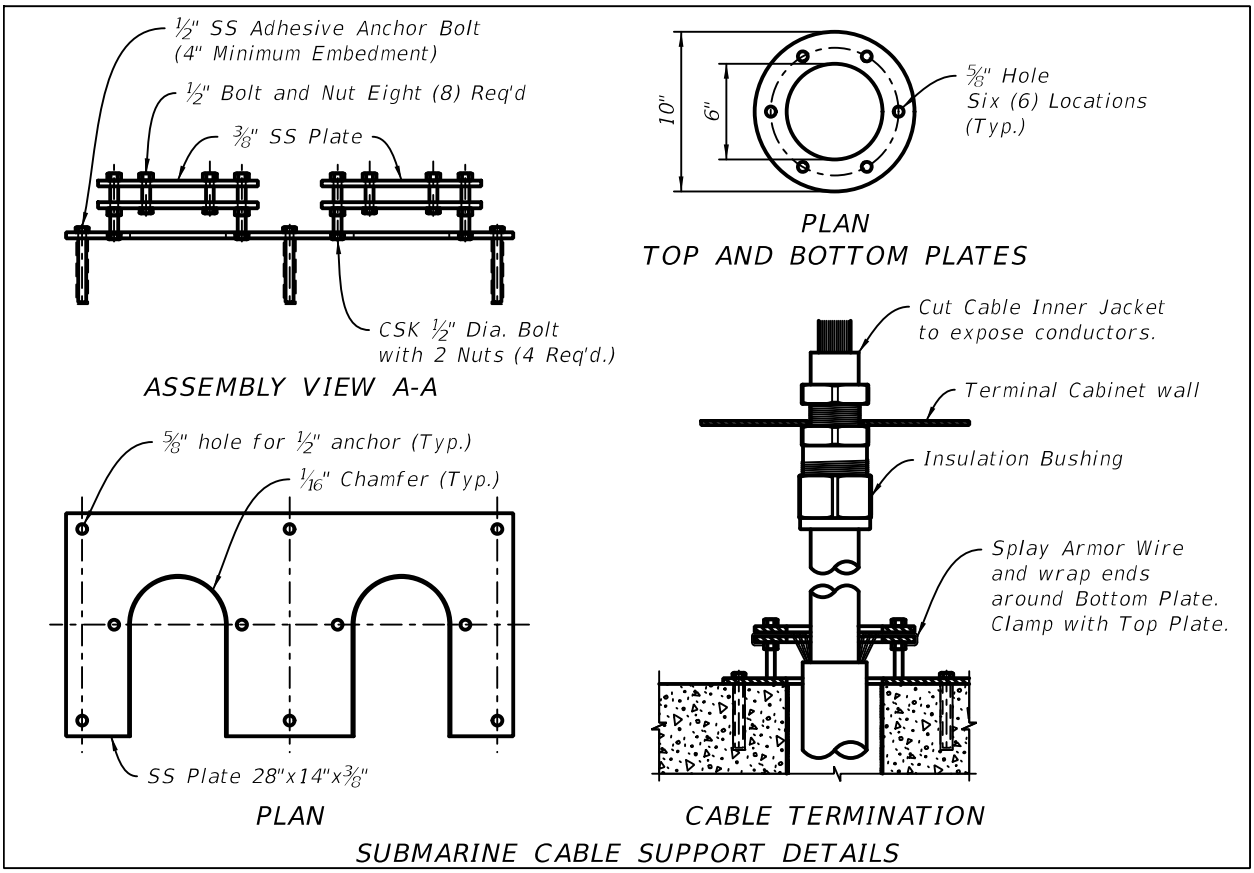

Figure 21.7.1-3Submarine Cable Trench

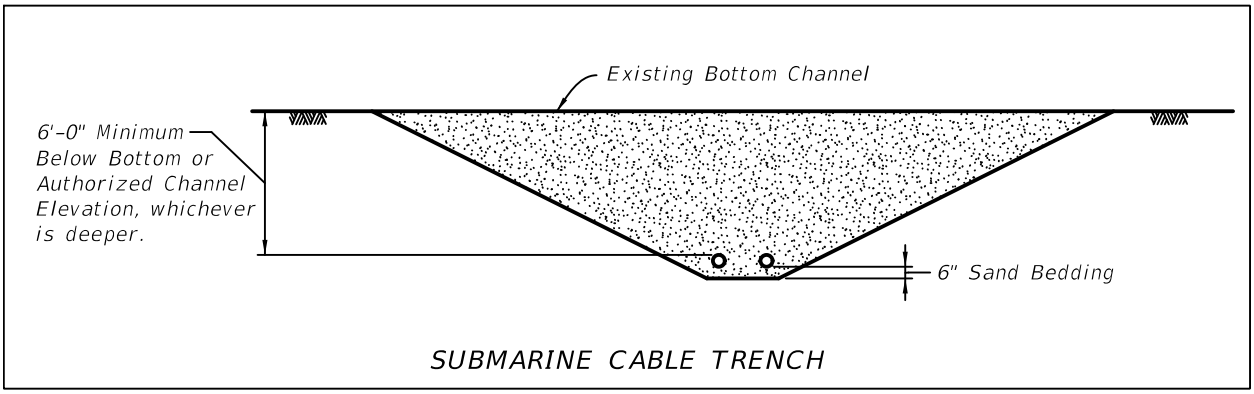

21.8 Centering Devices

21.8.1 Centering Device Detail Drawings

The following is a sample of Centering Device notes to be included on the Centering Device Detail sheet. Place these notes on the Centering Device Detail sheet and modify for project-specific requirements. At a minimum, show the following information:

A. Dimensions shown are for reference only. Size components per project requirements.

B. Fabricate Guide and Receiver from ASTM A27 Grade 70-36 Carbon Steel Casting.

C. Set Guide and Receiver after bascule leaves have been set and aligned.

D. Show position of centering devices on main girders in the Bascule Leaf drawings.

E. Adjust shims to provide 3½" overlap at field assembly for a mean structure temperature of 70° F.

Figure 21.8.1-1Centering Device Details

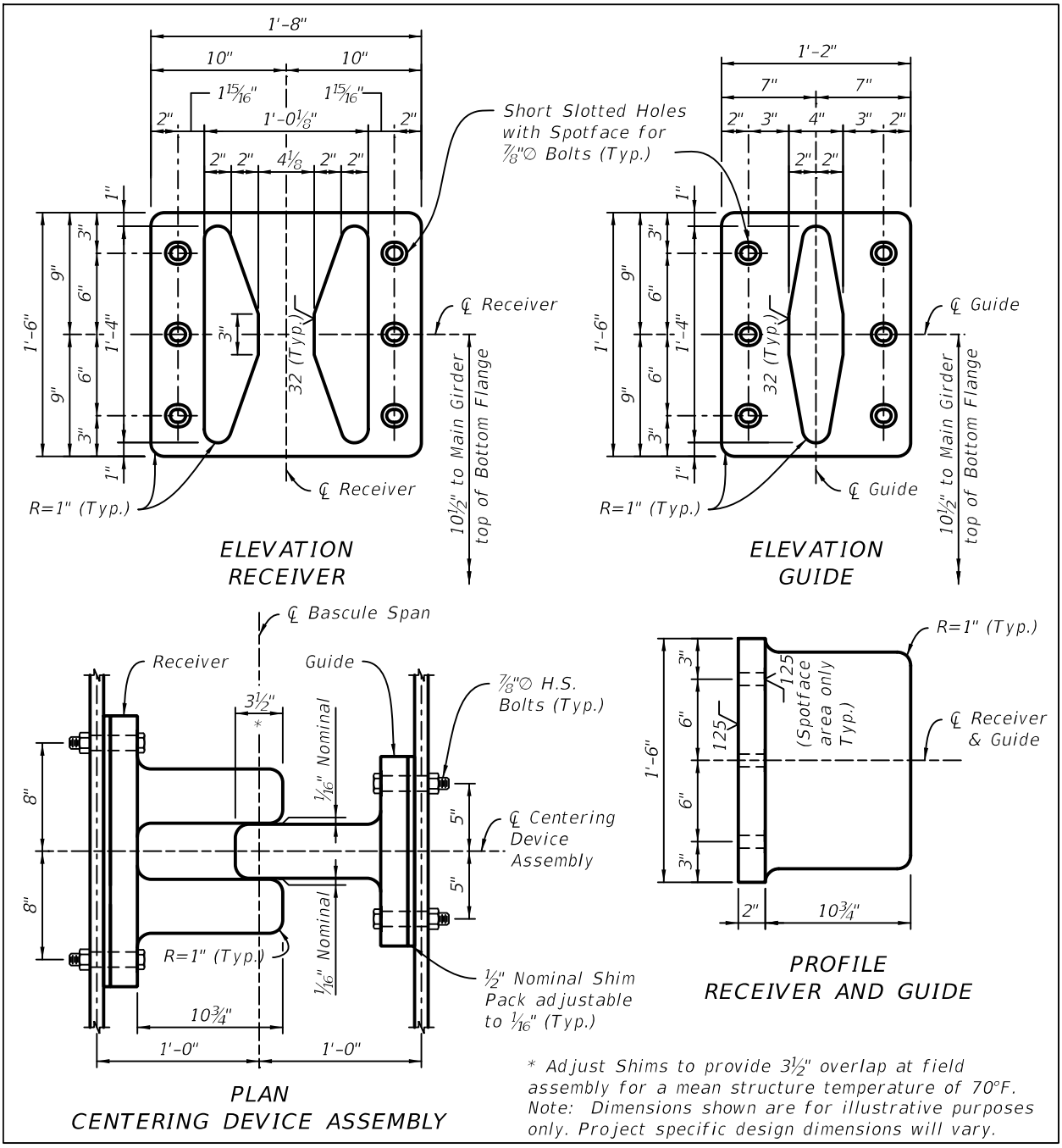

21.9 Counterweight Adjustment Blocks

21.9.1 Counterweight Adjustment Blocks Detail Drawings

Include the following notes and details as required for project specific conditions:

Note: Provide concrete or cast-iron counterweight blocks as required.

Figure 21.9.1-1Concrete Counterweight Adjustment Block Details

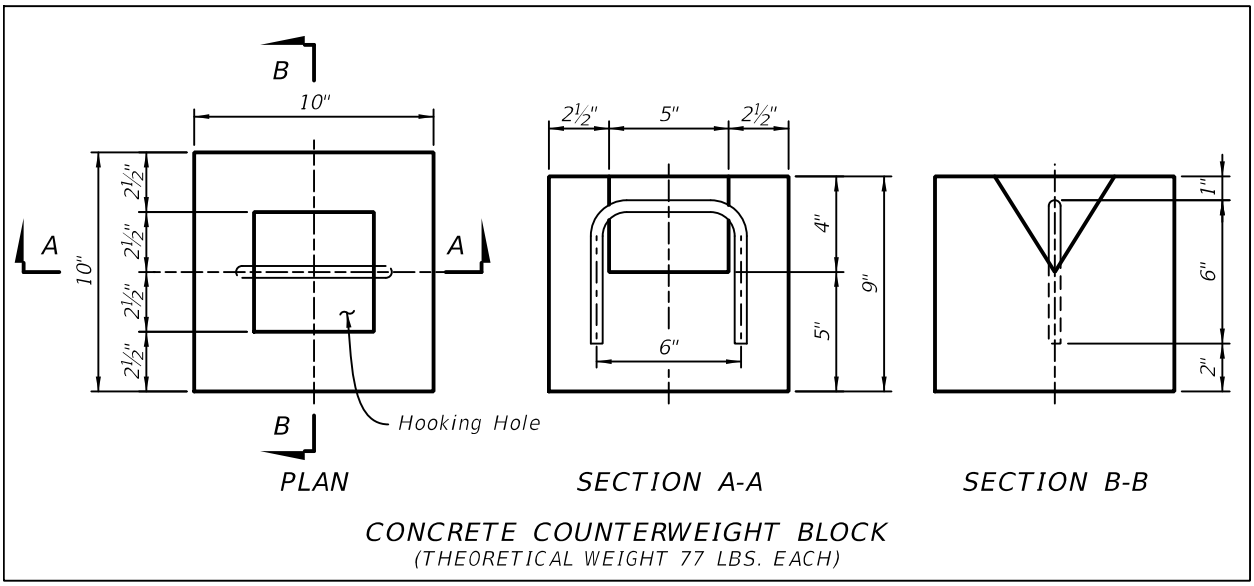

Figure 21.9.1-2Cast Iron Counterweight Adjustment Block Details

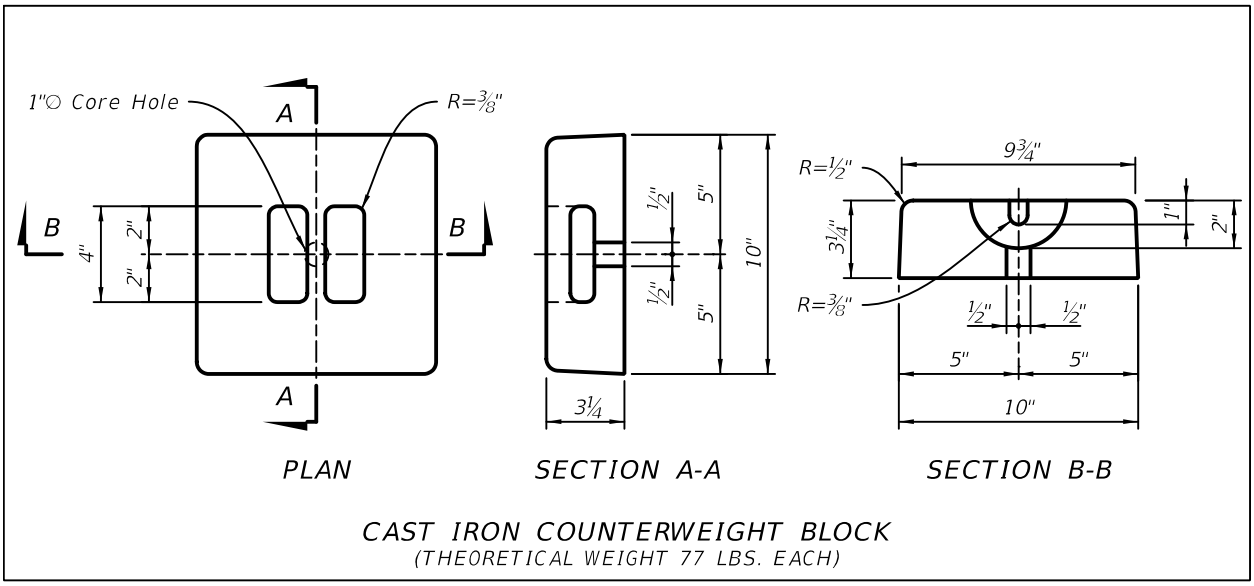

Figure 21.9.1-3Counterweight Block Handle Details

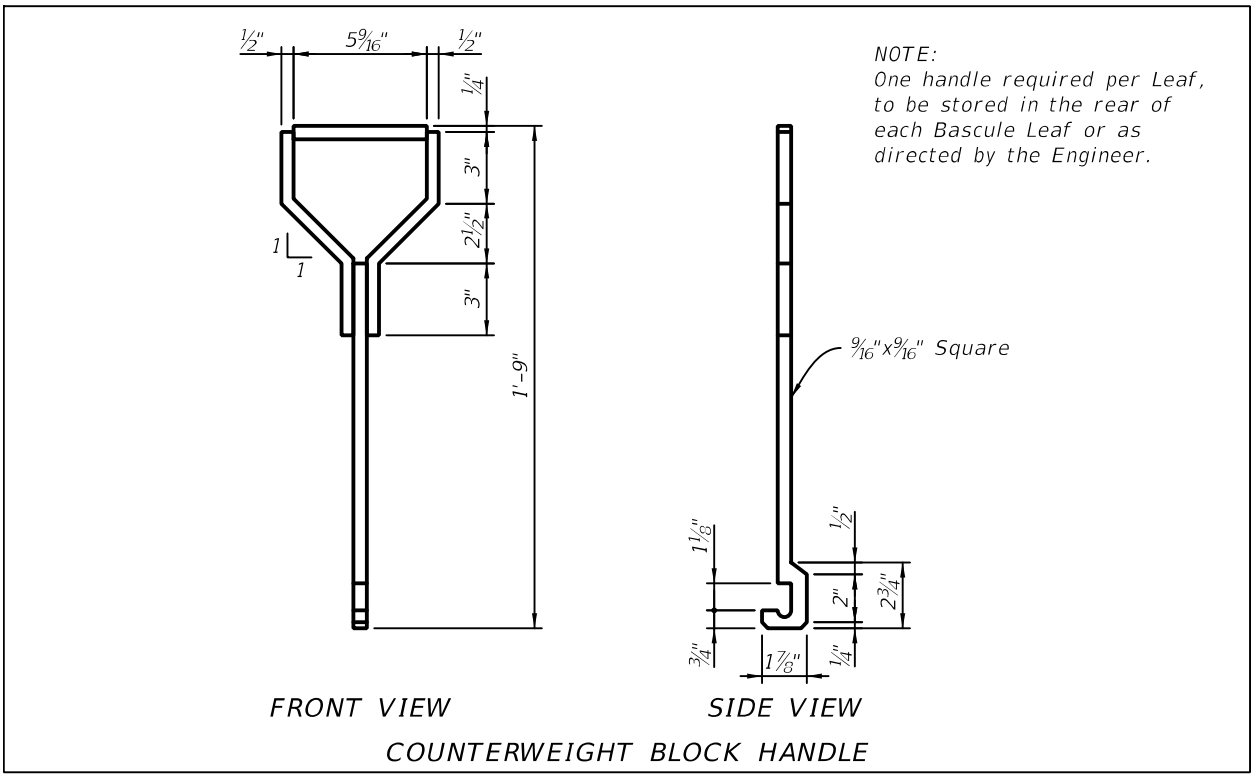

21.10 Live Load Shoes

21.10.1 Live Load Shoe Detail Drawings

The following is a sample of Live Load Shoe notes to be included on the Live Load Shoe Detail sheet. Place these notes on the Live Load Shoe Detail sheet and modify for project-specific requirements. At a minimum, show the following information:

A. Dimensions shown are for reference only. Size components per project requirements.

B. Reference Standard Specification Section 460 (Structural Steel and Miscellaneous Metals) and Movable Bridge Technical Special Provisions Article 468-9 (Live Load Shoes).

C. All material shall be ASTM A709, grade 50, except shims which shall be stainless steel, Type 304, ASTM A167.

D. Adjust shims so that there is at least 70% line contact between each rocker plate and bearing plate at final assembly with the bridge lowered and the span locks engaged.

E. Anchor bolts to be either cast in place ("J" bolts) or inserted into formed holes and grouted with an approved epoxy grout.

F. Grind exposed corners of the bearing plate and the rocker plate to 1/8" minimum radius and break all sharp edges.

Figure 21.10.1-1Live Load Shoe Details

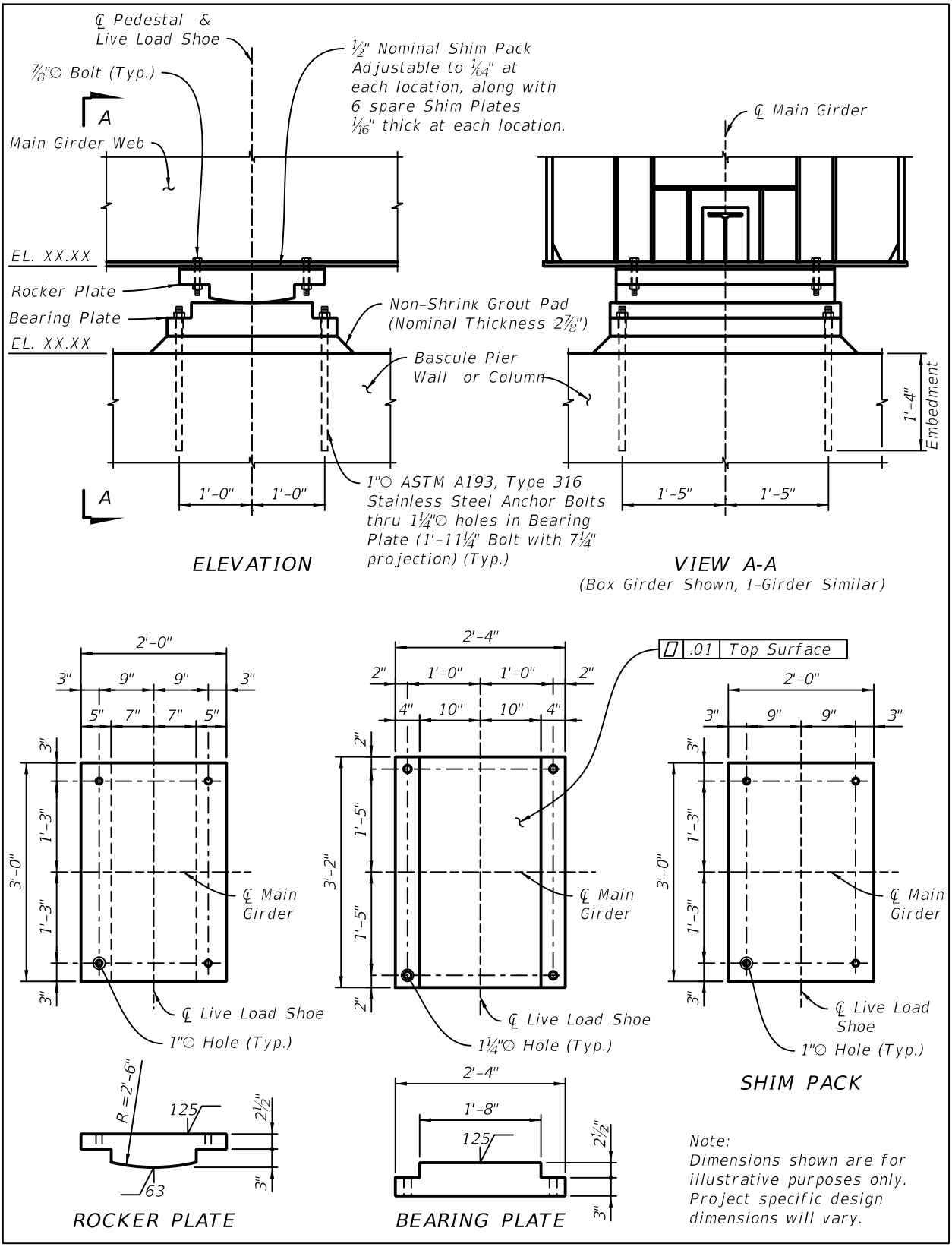

21.11 Span Locks

21.11.1 Span Lock Detail Drawings

Span Lock Detail Drawings are required for all bascule spans. At a minimum, show the following information (See Figure 21.11.1-1 and Figure 21.11.1-2):

A. Plan and Elevation of the Span Lock assembly and surround steel members.

B. Span Lock Material List (Including required material type and grade).

C. Hydraulic Parts List.

D. Span Lock Hydraulic Schematic.

E. Provide Operational pump specifications for normal operation.

F. Enlarged details:

   1. Lock Bar
   2. Clevis Pin/lock bar
   3. Font Guide and Receiver Assembly
   4. Rear Guide Assembly

G. Provide access locations/hatches if in Barriers (Girder Bridges only).

H. Provide access locations/hatches for lubrication manifolds in Barriers (Box Girder Bridges only).

I. Provide readily accessible local disconnect switches at street level.

Figure 21.11.1-1 Span Lock Plan and Section

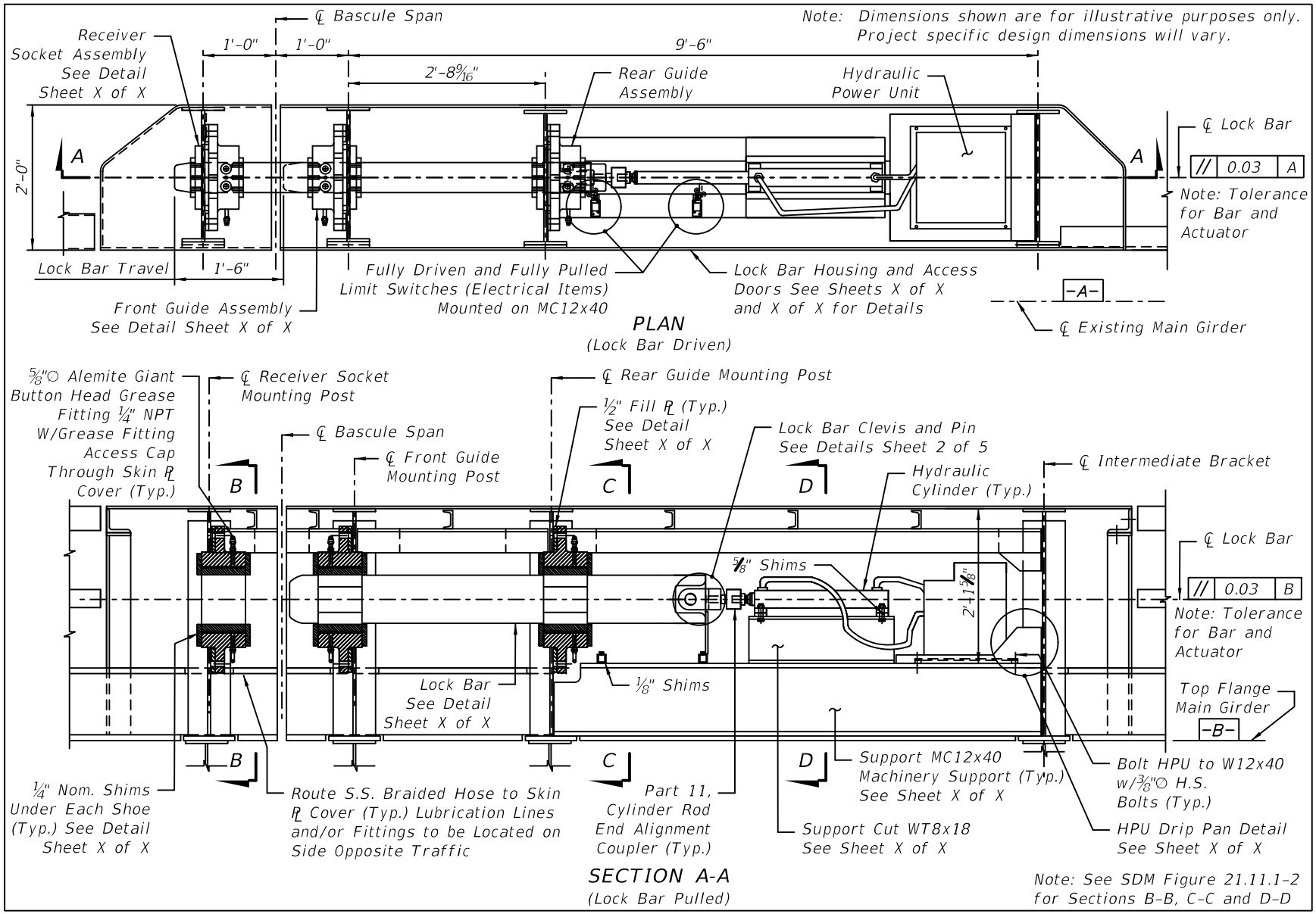

Figure 21.11.1-2 Span Lock Details

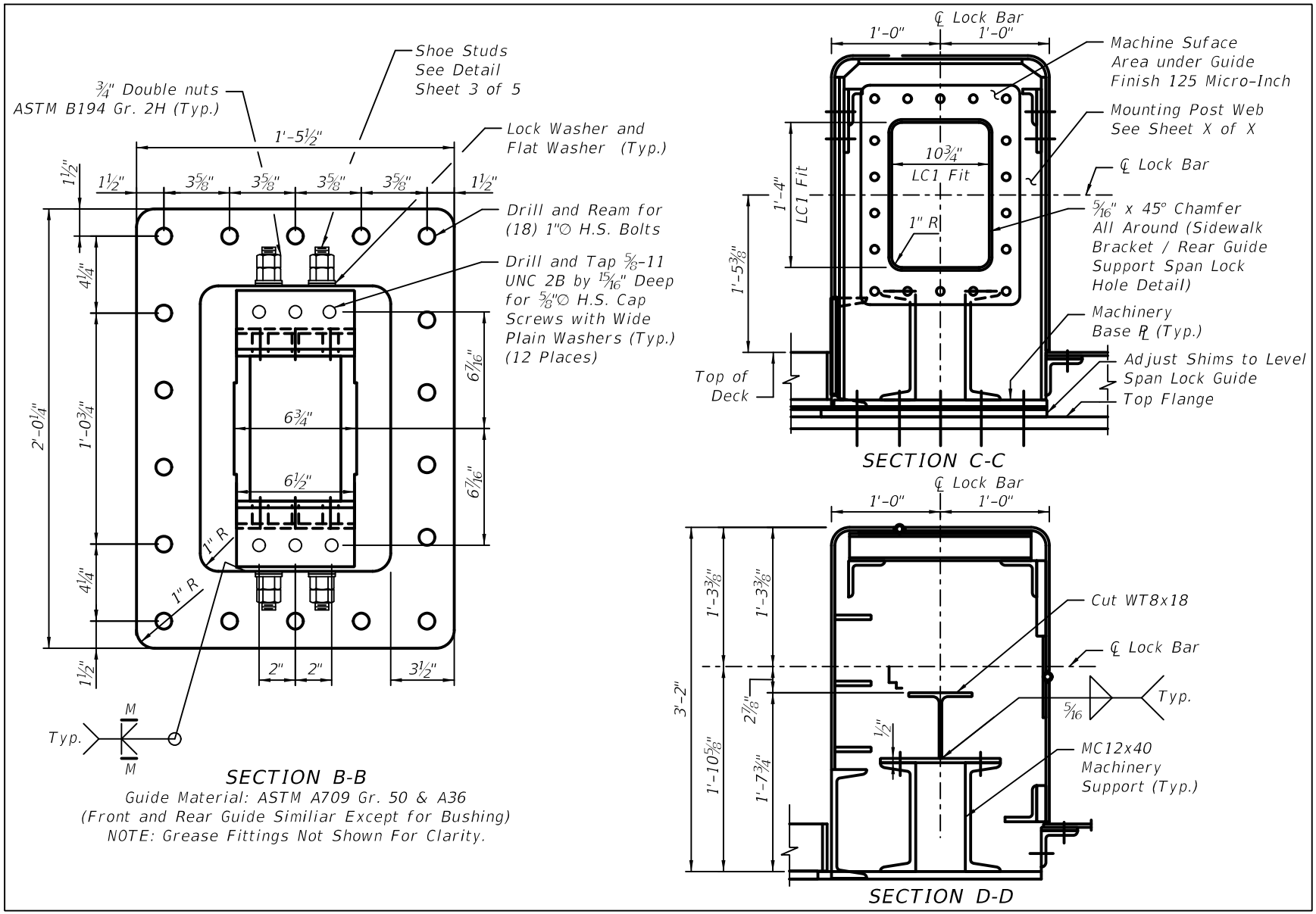

21.12 Bascule Leaf Barriers

21.12.1 Bascule Leaf Barrier Detail Drawings

At a minimum, show the following information (See Figure 21.12.1-1, Figure 21.12.1-2 and Figure 21.12.1-3): Dimensions shown are for reference only. Size components per project requirements.

A. All steel elements shall be in conformance with ASTM A709 Grade 50, except for TS sections which shall be in conformance with ASTM A500, Grade B.

B. Barrier assembly shall be galvanized per ASTM A123. Apply a zinc paint coating over field welded areas in conformance with the specifications.

C. The barrier shall be preassembled to bascule leaf in the shop to ensure the fit-up and proper final geometry.

D. Provide galvanized bolts for connection to floorbeams/bascule leaf.

E. Adjustable shim pack under the barrier to reduce field fit-up issues.

F. The traffic barrier and all its connections shall be designed for TL-4 loading, as defined in ***AASHTO LRFD***.

Figure 21.12.1-1 Pedestrian Barrier Section

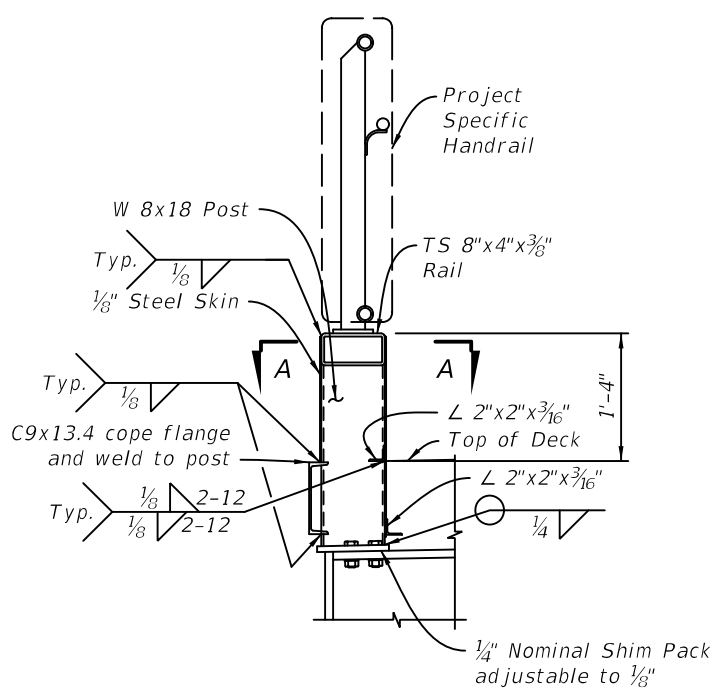

Note:
Ccontractor shall provide additional temporary bracing, as necessary, during the galvanizing process to prevent warping of skin plate and damage to the barrier. The bracing shall then be removed and all uncoated areas as part of the removal shall be repaired. The cost of any such temporary bracing shall be included in the cost of the Pedestrian Barrier.

PEDESTRIAN BARRIER SECTION

Figure 21.12.1-2 Traffic Barrier Sections

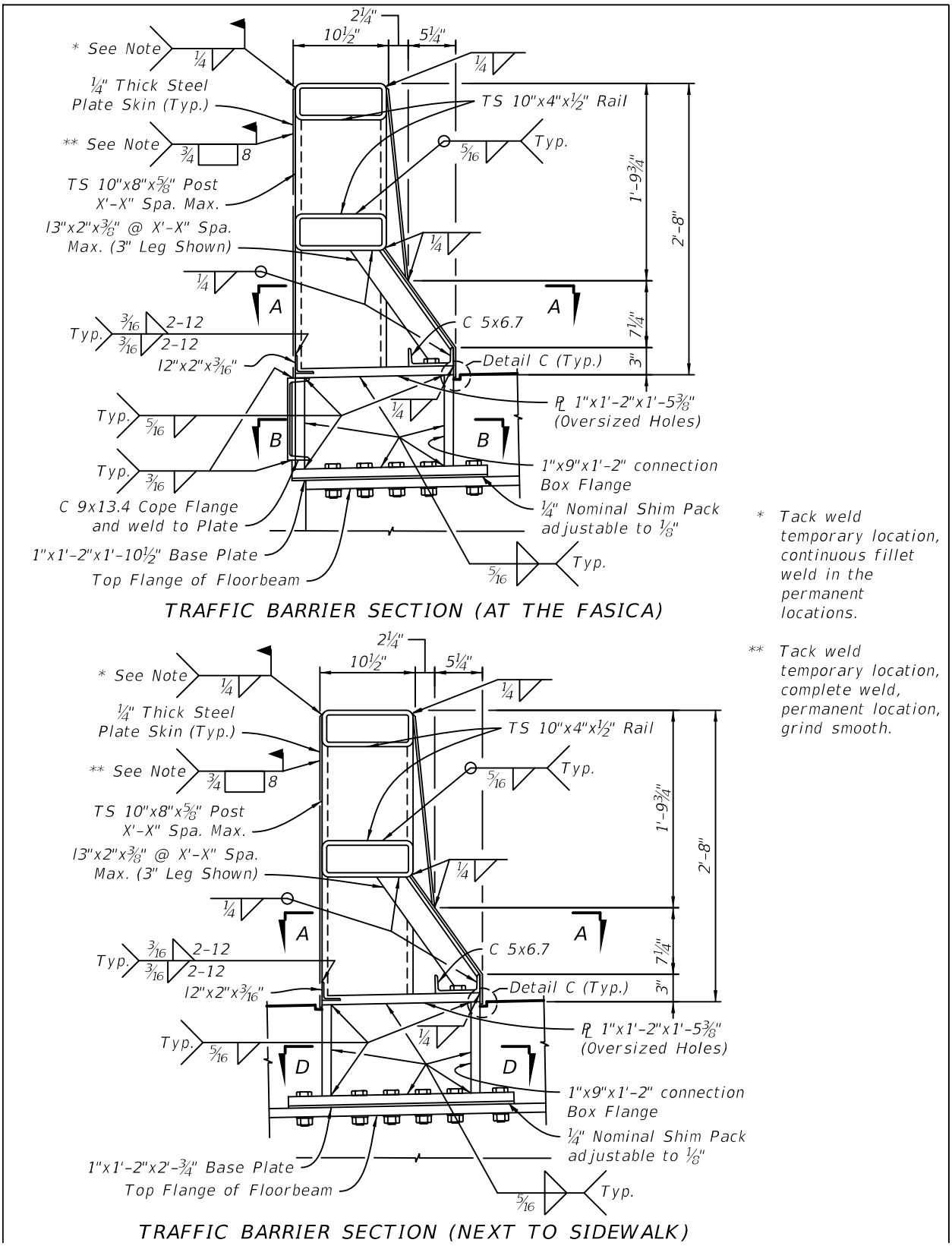

Figure 21.12.1-3 Barrier Field Splice Details

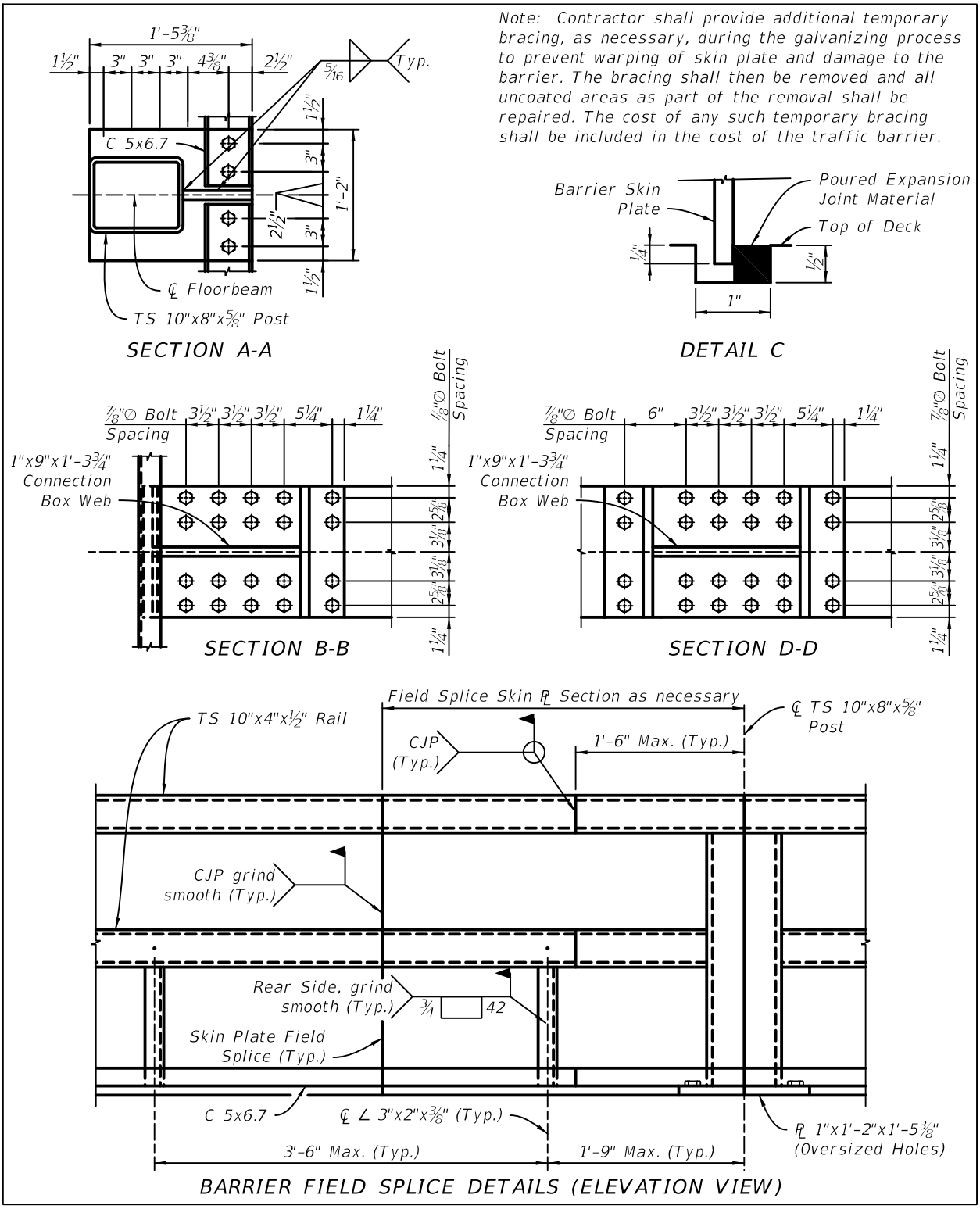

21.13 Bascule Leaf Deck Joints

21.13.1 Bascule Leaf Deck Joint Detail Drawings

Transverse and Longitudinal Joint Detail Drawings are required for all bascule spans. At a minimum, show the following information (See Figure 21.13.1-1 and Figure 21.13.1-2): Dimensions shown are for reference only. Size components per project requirements.

A. Plan view for each joint assembly

B. Enlarged details at joint intersections (As required).

C. Plates and angles shall be fabricated from ASTM A709 Grade 36 or 50 Steel, based on project requirements and availability.

D. Anchor studs shall be in accordance with ASTM A108.

E. Assemblies shall be galvanized after fabrication.

F. Traffic plates shall be removable.

G. Joint material shall be 3/16" Thick continuous neoprene reinforced with a double layer woven polyester fabric.

H. Joints shall be recessed from traffic plate to provide sufficient flexibility in narrower joints.

I. Vent hole locations

J. List of required drawings:

Figure 21.13.1-1 Bascule Leaf Rear Joint

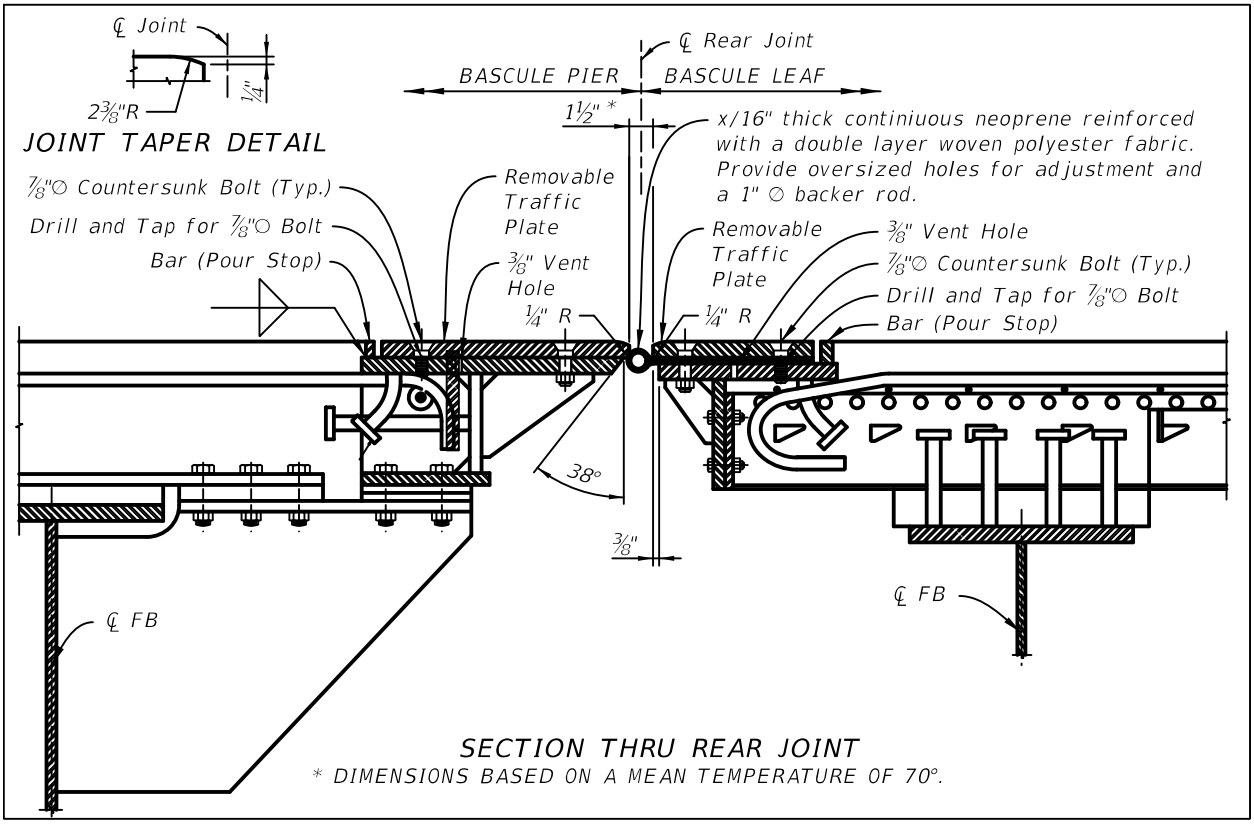

Figure 21.13.1-2 Bascule Leaf Forward Joint and Longitudinal Joint

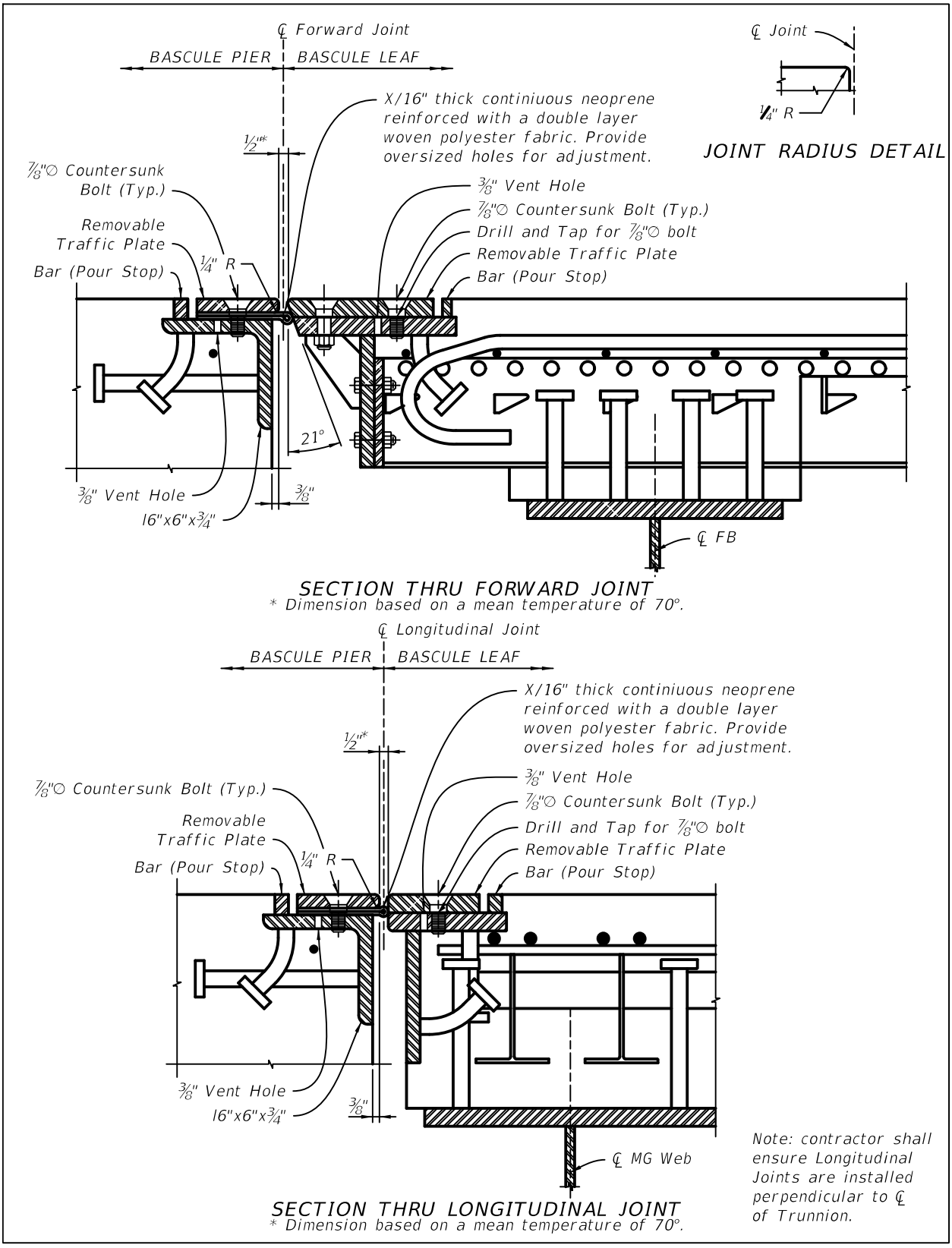

21.14 Bascule Bridge Plan Submittal Requirements

21.14.1 List of Required Drawings

A. Mechanical:

1. General Notes applicable to Mechanical Plans.
2. Equipment Schedule.
   a. Span Drive Machinery
   b. Trunnion Assembly
   c. Span Lock Machinery
   d. Span Lock Hydraulic Machinery
   e. Hydraulic Drive Equipment
   f. Hydraulic Line Schedule - Drive Hydraulics
   g. Hydraulic Line Schedule - Span Lock Hydraulics
3. Leaf Balance: Indicate Bascule Leaf Balance requirements as WLcos(alpha) and angle alpha, with a tolerance range. (show in Structural Drawings)
4. Span Jacking Provisions (show in Structural Drawings): Include future jacking arrangements, locations, supports and estimated loads for bascule leafs.
5. Drive Machinery: Show Drive Machinery layout in Plan, Elevation and Section views to fully detail, position, orient, and align the machinery in reference to trunnion centerlines. Show extent of concrete both in elevation and plan. Do not show machinery guards, but indicate the requirement in Notes. Verify 30" service clearance around drive system components.
6. Machinery Supports: Show nominal dimensions, tolerances, flatness, perpendicularity, parallelism and finishes. Provide holes for proper air circulation, drains for trapped water, clips of proper size at corners of stiffeners, and edge clearances for stiffeners. Designate all welds, and call out testing requirements for welds. Locate all bolt holes based on footprint of machinery. Verify edge distances for all bolts. Add Notes to require vent holes for grout, leveling screws. Design and locate anchor bolts to allow space, especially headroom for hydraulic tensioning.
7. Trunnion Assembly: Detail assembly including girder, hubs, rings, dowels, bearings, shims, bearing supports, grout and concrete support columns. Design a thrust surface for bushing on the trunnion shoulder, and provide thermal allowances at thrust interfaces. Size the length of trunnion to extend 1/2" beyond the face of bushing.
8. Open Gearing: Specify and detail, if profile modifications are employed. State the AGMA accuracy grade, if different from Specs.
9. Racks: Show in assembly view with trunnion and girder section. Detail rack (with rim and support) as a weldment bolted to the bottom of the girder. Designate all welds and specify extent of weld testing required. Detail shims, and add notes if

needed. Add note to caution against tolerance stacking in case of bolt holes. Tabulate gear parameters to correspond with pinion.

10. Pinions: Fully specify pinion (tabulate requirements) in correspondence with the rack. Fully specify keys and keyways.
11. Speed Reducers: Detail technical requirements in tabular form with exact ratios. Specify exact ratios to two significant digits. Show footprint based on actual dimensions obtained from selected models. Size and locate mounting bolts and show edge distances. Provide clearances for bolt tensioning. Coordinate with support bases.
12. Brakes: Indicate recommended and maximum brake setting torques values for motor/machinery brakes. Call out factory setting of brakes. Design for AISE/ NEMA dimensions, to facilitate equal replacements.
13. Bearings: Detail bushing grooves, locations and fittings. Indicate dowel pins, or recess base into cap for pillow block. Detail and specify anti-friction bearings; list technical requirements.
14. Drive Hydraulic Cylinders: Show mounting arrangements in reference to trunnion and bearing centerlines along x, y, z axes. Show clevises and all parts with section of girder. Show anchor bolt assemblies to anchor the clevis bases to the machinery platform. Show alignment requirements. Profile the locus of clevis pin centerline. Show mounting position of manifolds. List or show all technical specifications for cylinders, including cushioning.
15. Hydraulic System Layout/Piping: Show the Hydraulic Power Units and all accessories including piping layout and control panels. Add Notes on reservoir specifics, not covered by Specifications. Indicate maximum flow required for full speed operation; the pressure compensator setting to fully compensate the pump at the specified working setting. Indicate initial settings for adjustable counterbalance valves. Show and specify secondary containment for hydraulic fluid.
16. Cylinder Support Assemblies: Detail clevis assembly and its components individually, including spherical bearings and shims. Show and specify fits, finishes and tolerances. Specify material, detail welding and testing requirements.
17. Hydraulic System: Include technical specifications for each component of the hydraulic system starting with the pump following along the pressure line through the cylinder, returning to the pump. Indicate the settings for various components as applicable.
18. Live Load Shoes: Show live load shoe assemblies with leaf in closed position, including all structural interfaces for proper alignment and orientation. Show and specify shims and non-shrink epoxy grout. Indicate material, installation notes and anchor bolt details. When Rear Live Load Shoe Assemblies are provided, indicate the gap between live load shoe and strike plate to which the shoes are to be aligned and shimmed.
19. Centering Devices: For accurate positioning and orientation of centering devices, show on Structural drawings as an assembly. Show and detail supports for all

components, mounting arrangement, and interfaces. Specify material, and show finishes, clearances and length of engagement at mean structure temperature of 70°F.

20. Span Lock Assemblies: Show and specify materials and products, including hydraulic system components. For weldments, designate all welds and specify extent of weld testing required. Indicate mounting arrangement of cylinders, and specify cylinders in detail. Specify adjustable pressure relief valves and settings, configured for the mounting arrangement. Indicate clearances for the lock bar within the guides and receivers, and the bar and cylinder alignment criteria. Specify Hand pump (relief valve, 4-way vales, hoses and disconnects) in Plans to show one male and one female disconnects at the hose ends, with corresponding interfaces at the connections to the cylinders. Add notes to indicate alignment tolerances for bars and cylinders. Show hydraulic schematic with component reference numbers. Show location and mounting arrangement for span lock limit switch assemblies, specified in detail, and paid for under Section 508.

B. Electrical:

1. Control Tower - Control Console and Operator's Visualization Geometry Analysis Including CCTV Locations.
2. General notes applicable to Electrical Plans.
3. Electrical site plan showing traffic lights, traffic gates, traffic barriers, incoming service, service connection point, phone number of local electric utility and phone companies.
4. Conduit riser diagram complete with conduit and cable schedule.
5. Single line diagram.
6. Symbol legend.
7. Lighting and equipment plan. Including, lighting panel schedule, fire detection system, and control tower lighting.
8. Lightning protection, bonding, and grounding plan.
9. Navigation lighting plan.
10. Communication equipment plan.
11. Control panel details.
12. Control console details.
13. Block diagram of operating sequence.
14. Schematic diagrams for traffic lights, traffic gates, span locks, safety interlocks, leaf drives, navigation lights, etc.
15. Control system I/O points.
16. Ladder logic for PLC.
17. Submarine cable/submarine cable termination cabinet details.

18. Fire and security panel schematic diagram.
19. CCTV system plan and elevation.
20. Limit switch development.
21. Electrical equipment layout - Including but not limited to generators, motors, control console, control panels, motor control center.

C. Architectural:

1. Building: Include a floor plan of each floor, egress plan, exterior and interior elevations, representative building sections, wall sections and details, schedules for finishes and equipment, type and class of construction, large scale drawings of special conditions, reflected ceiling plans, door and window schedules, safety equipment, description of materials, color schemes and schedules, and other information necessary to explain the design.
2. Structural: Include floor plans showing framing plan, column sizes, structural walls, stairs, and special conditions; structural building sections showing size and relationships between columns, beams, and other structural components; structural details and schedules; limiting load capacities; design loads for wind, seismic, live and dead loading; reinforcing bar schedule (where applicable), and other data required to fully explain the structural system.
3. Heating, Ventilation, Air Conditioning (HVAC): Provide plans showing equipment and duct work horizontal layout; building sections showing vertical location and relationship of equipment and duct work with building structure; provide design criteria for all systems; indicate type of control system; delineate control zones; describe all aspects of the various components of all systems; design calculations.
4. Plumbing: Provide plans showing drinking water distribution and waste water collection systems; provide preliminary layout of systems including elevations and line sizes; plans showing horizontal and vertical services with sizes; fixtures and equipment; water pressure and volume requirements; additional details and information necessary to fully describe the complete systems.
5. Electrical: Indicate schematics showing lighting, power, equipment, special equipment; location of all switches, lighting fixtures, and receptacles; show all circuits with number, size, and type of conductors; provide for protective devices, and emergency systems; provide for low voltage communication system, and other electrical system requirements. These schematics are part of the Electrical plans.
6. Communications, Electronics, Instrumentation: Provide systems schematics and information for proposed intercom, telephone, public address, radio communications, CCTV, computers, electronic communications, protective alarm. Indicate equipment and instrumentation arrangement and space requirements including racks, consoles, and mountings; wiring and cable requirements; power and lighting requirements including emergency and standby requirements; fire detection system; and air conditioning. These schematics are part of the Electrical plans.
7. Special Equipment: Show location and type of special equipment, if any, on plans.

21.14.2 Progress Submittals Schedule and Content

A. Mechanical:

1. 30%:

   a. Preliminary Plans and Calculations.

   b. Submit updated Cost Estimates & Scope of Work Minutes and Comments based on the Bridge Development Report (BDR). If no BDR, include the initial cost and scope data.

   c. A preliminary Key Sheet including the project title and a location map in the center of this sheet and an index of drawings date with a key as to status. Include proper job numbers, bridge numbers, and WPI numbers. If a piece of information is not available include the title and show N/A.

   d. General Notes Sheets: Outline of Plan Development Criteria. The basic decision to include information on the drawings in lieu of in the technical specifications is based on applicability. Information that does not change much from bridge to bridge should show up in the Technical Special Provisions. Information that is particular to the specific bridge should be put on the drawings.

   e. Plan and Elevation Sheet: A machinery layout and arrangement drawing must be shown both in plan and elevation. Sections may be necessary to clearly show the design. The 30% submittal may be only preliminary sketches, but the intent of the design will be shown.

   f. Substructure and Superstructure and Roadway Approach Interface Details. To insure adequate control, these details are to be developed sufficiently to define the design. The critical criteria should be shown in the 30% submittal.

   g. Design Submittal Checklist: At the first submittal, a checklist of what packages are to be submitted and when they are scheduled to be forwarded must be developed and submitted to keep proper control of the approval process. The checklist should be updated as necessary. The revision of the submittal sheets must also be included on this list to insure the latest documents are used. Once a drawing or technical specification section has been issued as a submittal, all later changes are to be identified with a revision statement, designation and date. These statements would not show up in the final design package but are essential during the initial submittals to identify what is happening and establish a design history.

2. 60%:

   a. The design and calculations at this phase should be 90% complete and the drawings 70% complete. All known problems should be identified and corrective action initiated and well underway. All comments from the 30% design phase submittal are to be resolved to the maximum extent possible.

b. A listing of all anticipated Technical Special Provisions Sections to be produced is to be submitted.

c. The CES sheet information should be developed and any problems resolved.

3. 90%:

a. All Drawings, Calculations and Technical Special Provisions Sections must be completed. Any action on the 90% plans and special provisions should be minor corrections only. If the changes are significant, resubmit as a 90% package.

b. All comments from the 60% plans phase and any previous comments, not completed, must be resolved.

c. All CES information should be input into the Department's computer.

4. 100%:

This submittal is to be complete and ready for bids. Verification that the required changes have been incorporated and review of the final signing and sealing are the only actions that should have to be taken by the Department. This is not the time to be cleaning up the last 20 percent of the design.

B. Electrical:

1. 30%:

a. List of specifications to use.

b. Single line diagram including service voltage.

c. Plan view showing major electrical equipment layout and location of service.

d. Plan view showing submarine cable routing.

e. List of all proposed electrical drawings.

2. 60%:

a. List of changes from last submittal. All comments from the 30% plans phase and any previous comments, not completed, must resolved.

b. Draft of specifications.

c. Electrical calculations, i.e., generator size, service voltage drop, short circuit, service size, Automatic Transfer Switch, major electrical equipment voltage drop calculations, etc.

d. Single line diagram showing equipment sizes and utility company.

e. Conduit and wire sizes for major electrical equipment.

f. Panelboard schedules.

g. Light fixture legends.

h. All drawings with sufficient detail to show intent of design.

i. Preliminary C.E.S.

j. Utility coordination letter.

k. Major electrical equipment layout indicating clearances around the equipment, and location of the disconnect switches.

3. 90%:

a. List of changes from last submittal.

b. All comments from the 60% plans phase and any previous comments, not completed, must be resolved. Any action on the 90% plans and special provisions should be minor corrections only. If the changes are significant, resubmit as a 90% package.

c. Final version of specifications.

d. All final calculations.

e. All completed drawings, including C.E.S.

4. 100%:

All documents with all corrections incorporated and ready for bid.

C. Architectural:

1. 30%:

a. List of specifications to use.

b. Preliminary floor plans.

2. 60%:

a. List of changes from last submittal.

b. Draft of specifications.

c. All drawings with sufficient detail to show intent of design.

3. 90%:

a. List of changes from last submittal.

b. All comments from the 60% plans phase and any previous comments, not completed, must be resolved. Any action on the 90% plans and special provisions should be minor corrections only. If the changes are significant, resubmit as a 90% package.

c. Final version of specifications.

d. All final calculations, including HVAC calculations.

e. All completed drawings, including C.E.S.

4. 100%:

All documents with all corrections incorporated and ready for bid.

22 DRAINAGE (Rev. 01/11)

22.1 General

A. This chapter addresses preferred methods for conveyance of collected storm water within retained embankment and along bridge structures.

B. Drainage design within retained embankments and along bridge structures is the primary responsibility of the Drainage EOR. A coordinated effort between the Structures EOR and the Drainage EOR is required to properly incorporate the drainage design into the Plans set and the completed structure.

C. For drainage hydraulic design, including pipe sizing, inlet spacing and sizing, see the ***Drainage Manual***.

D. This chapter does not address the disposition of utilities attached to structures or within retained embankment. See the ***Utilities Accommodation Manual*** and ***SDG*** for additional guidance regarding utilities located adjacent to transportation structures.

E. Drainage details should be developed at the earliest stages of the design phase. See ***PPM*** Chapter 26 for Phase Submittal requirements.

22.2 Deck Drains

Deck drainage can be accomplished by using deck drains cast into the bridge deck, by using scuppers (open deck drains) to discharge the storm water over the side of the bridge or a combination of both. It is preferable to avoid the use of deck drains of either type on a bridge structure. In situations where the use of deck drainage cannot be avoided, take into account the following design considerations:

A. Minimize the need for conveying storm water through piping on the bridge. Due to the inherent complexities and maintenance issues associated with bridge drainage piping, where allowed, design scuppers to pipe drainage to the ground directly or use extended downspouts. Ensure that run-off will be carried away from substructure as well as underlying infrastructure. When 4 inch diameter scuppers are impractical, consider using large scuppers and ditch bottom inlets as shown in Figure 22.2-1 to avoid conveying storm water in piping attached to the bridge.

Figure 22.2-1 Large Scupper Detail

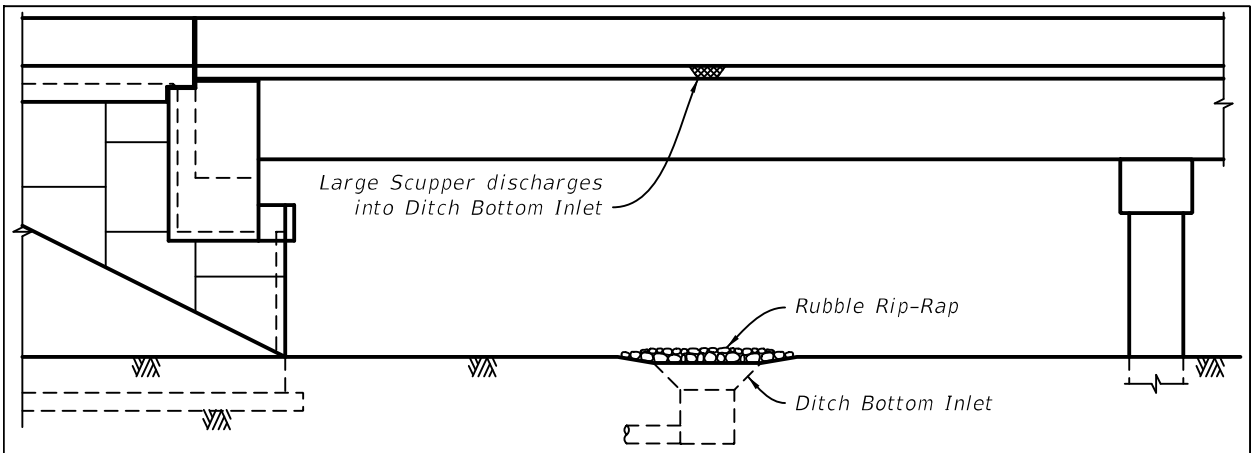

LARGE SCUPPER DETAIL

NOTES:
1. Place large Scuppers over Ditch Bottom Inlet.
2. Place Rip-Rap over Ditch Bottom Inlet to dissapate energy of falling water.
3. Scuppers may discharge directly into water or onto existing ground. Check with local permitting agencies to ensure compliance.

B. Detail simple open deck drain forms (e.g. 4-inch diameter scuppers) using the scupper details cell in the Structures Bar Menu.

C. Scuppers must not discharge directly on the supporting beams or girders, substructure embankments at end bents, lower roadways and sidewalks, or other areas (water or land) where not permitted. Consult with Drainage EOR for recommended locations.

D. Locate required deck drains near pier supports and, when practical, use a single drain sized to drain the entire span. Thickened deck slab and additional reinforcement is required in the bridge deck at closed deck drain locations. Detail additional reinforcing around drains. The reinforcing requirement is dependent on the drain size and beam spacing. See Figure 22.2-2.

E. Provide a flexible or semi-rigid connection with the drain that accommodates differential movement between the superstructure and substructure. See Figure 22.3-1.

Figure 22.2-2 Deck Drain Detail

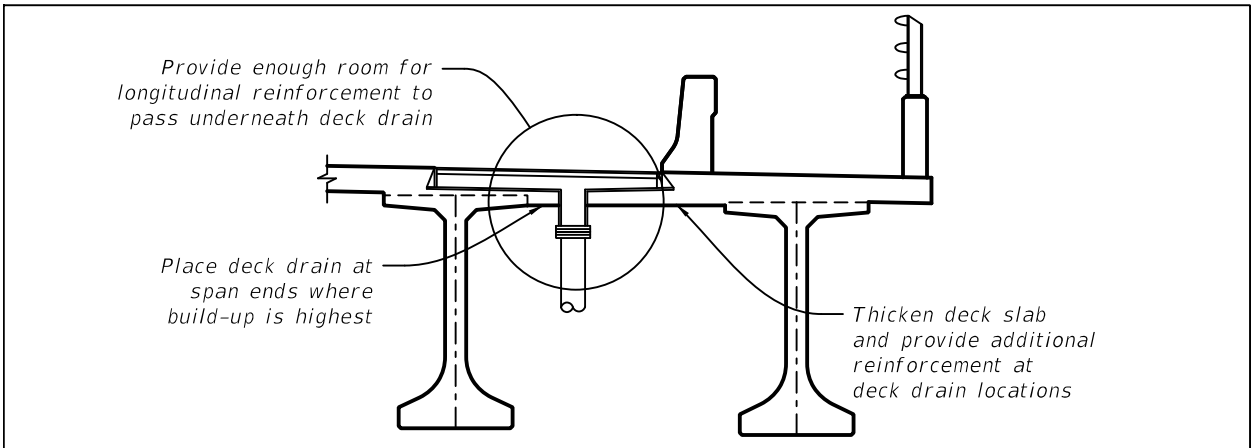

DECK DRAIN DETAIL

F. Detail the closed drain systems utilizing deck drains that are prefabricated steel drain boxes with anchor studs, hot dip galvanized after fabrication with removable grates, welded steel plates and bars with anchors. Design closed drains for wheel loads or pedestrians (ADA compliant) based on their locations on the bridge deck.

G. For deck drains encased in concrete, specify gray cast iron, ductile cast iron or galvanized steel. Do not specify gray cast iron or ductile cast iron for use in Extremely Aggressive environments.

H. A note allowing specific alternate ferrous castings in lieu of prefabricated steel drain boxes may be included. Do not list proprietary names of items or vendor names.

22.3 Drain Conveyance

Deck drainage must be conveyed in a manner that takes into consideration function, maintenance and aesthetics. The expected movements of the structure (thermal, deflection, etc.) must be taken into account when designing drainage conveyance and attachments to the bridge and substructure. What follows are additional design considerations and plans content when designing storm drain conveyance:

A. Fully detail pipe hanger or other attachments to the structure. Use roller-type hangers for attaching pipe to bridges with non-conductive type rollers. Specify 316 stainless steel hangers for all attachments to the bridge structure where the superstructure environment has been classified as extremely aggressive.

B. Ensure that pipes encased in concrete do not conflict with reinforcing steel, post-tensioning ducts, anchor bolts, etc. Maintain the same concrete cover for pipe and reinforcing steel. For piping cast in pier columns and caps, show piping on pier reinforcing detail sheets and integrated drawings for post-tensioning. Use pier segment bump-outs to avoid post tensioning and highly congested pier diaphragms. See Figure 22.3-1 for typical conveyance details in piers.

C. For primarily vertical conveyances, the use of 8-inch diameter pipe is preferred and 6-inch diameter pipe is the minimum. Use 12-inch minimum diameter pipe for longitudinal conveyances and trunk lines. Do not specify bends greater than 45 degrees.

D. Show connections, cleanouts, elbows and all other necessary parts. Show a minimum of one cleanout in each vertical conveyance or pier. Show a minimum of one cleanout every 100 feet in longitudinal conveyances and trunk lines. Show additional cleanouts as necessary for complex pipe configurations.

Figure 22.3-1 Pier Drainage Details

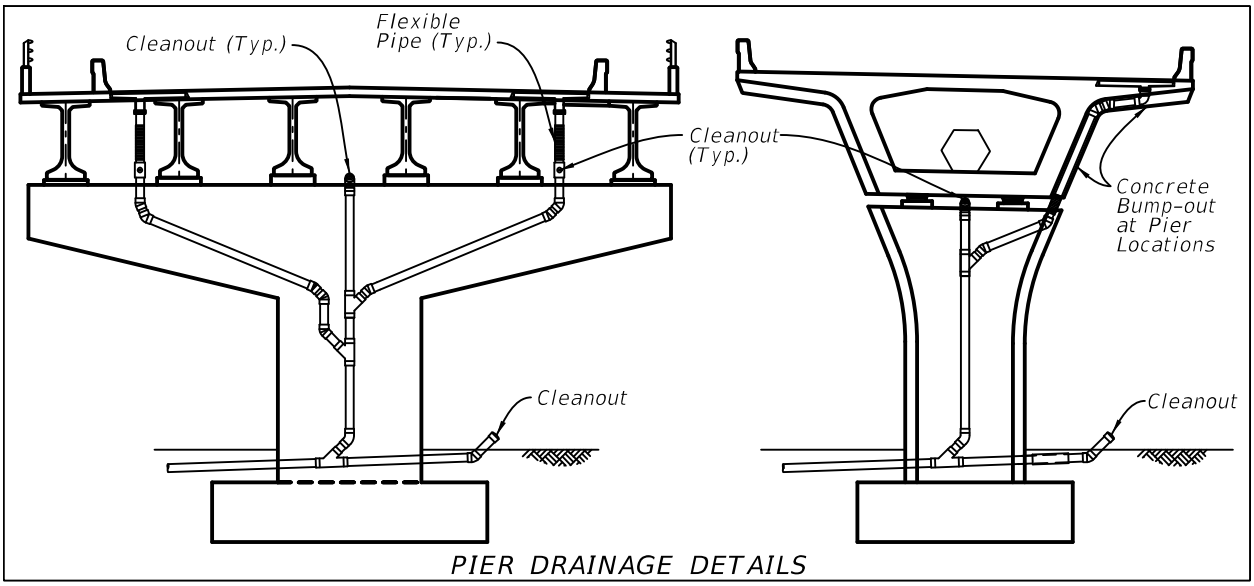

E. Underground laterals must be buried a minimum of 12". Place required cleanout as close as practical to the base of the structure.

F. Due to differential settlement issues between approach roadway embankment and End Bent, avoid running drain pipe through blockout in Backwall. If running the pipe through the backwall is required, provide details that can accommodate settlement and construction tolerances.

G. Show pipes penetrating through diaphragm. For steel bridges ensure that pipes do not conflict with cross frames. For box girder bridges, locate pipes along the sides of the box so as to maintain clear access along the center of box.

H. Longitudinal or vertical conveyance piping is not permitted inside enclosed spaces, e.g. box beams, standard Florida-U beams, hollow piers, etc., that cannot be directly inspected. Where possible, avoid placing longitudinal conveyance piping inside box-type superstructures regardless of inspectability, or in highly visible areas such as under cantilevers.

22.3.1 Drain Conveyance - Optional Materials

A. For drain conveyances encased in concrete, specify UV-resistant, schedule 80, Polyvinyl Chloride (PVC), High Density Polyethylene (HDPE), or ductile cast iron.

B. For drain conveyances not encased in concrete, specify UV-resistant, schedule 80 PVC or machine-made or filament-wound "Fiberglass" (Glass-Fiber-Reinforced-Thermosetting-Resin). Do not specify ductile cast iron in external applications.

C. Where flexible or semi-rigid connections are required, specify flexible UV-resistant PVC or HDPE, depending on the location within the structure.

D. See Figure 22.3.1-1 for optional pipe materials based on pipe location within the structure.

E. For scuppers, any of the materials listed in Figure 22.3.1-1 are allowed if the pipe is removed after casting operations are complete. The allowable materials designated as acceptable for use in scuppers are suitable for permanent applications.

F. Refer to pipe manufacturer's specifications for maximum pipe hanger spacing. Do not attach any portion of the drainage conveyance system to the bridge girders.

Figure 22.3.1-1 Optional Materials Details

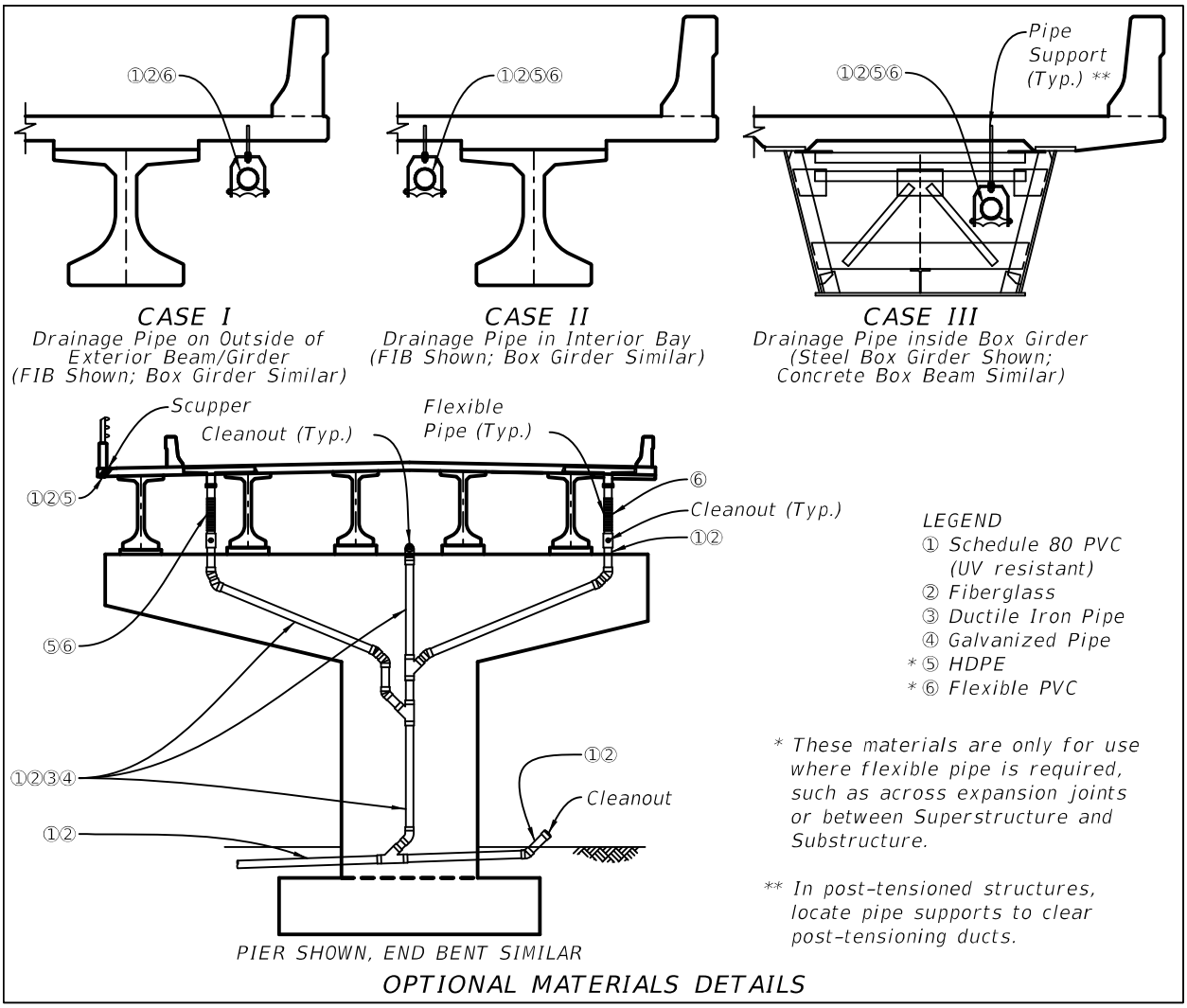

22.4 Drainage within Retaining Wall Embankments

Conveying collected storm water through retaining wall embankments should be avoided whenever possible. Reasonable efforts should be made to allow water to flow off of the retained portion of the road and into inlets beyond wall or bridge limits. When collected storm water must be conveyed through MSE retaining wall embankment, do not place the trunk line within two feet of the reinforced soil zone. See the ***Storm Drain Handbook*** for more information on carrying storm water through retaining wall embankment. Figure 22.4-1 through Figure 22.4-4 show example typical sections with alternatives for conveying collected storm water through MSE wall embankment.

Figure 22.4-1 Drainage Discharge Through MSE Wall

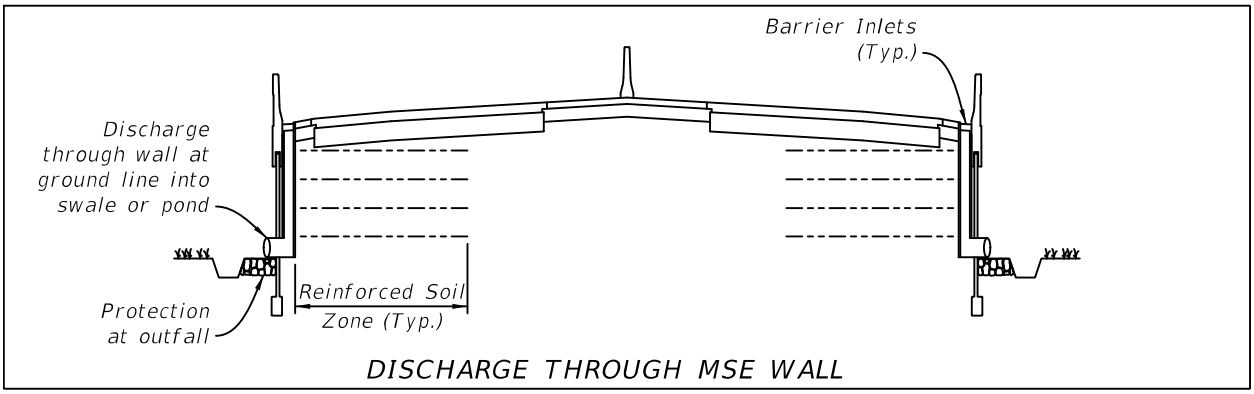

Figure 22.4-2 Drainage with Trunk Line Outside of Retaining Wall

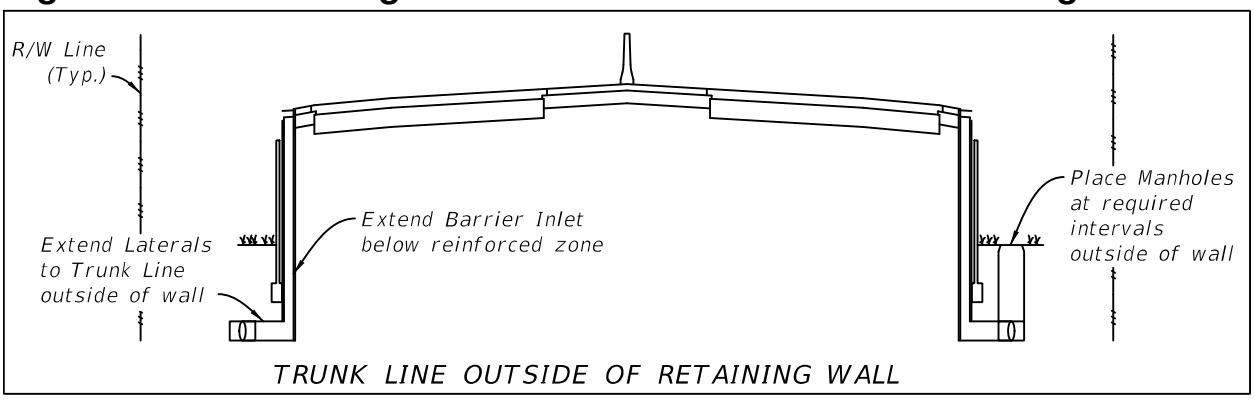

Figure 22.4-3 Drainage Single Trunk Line Alternative

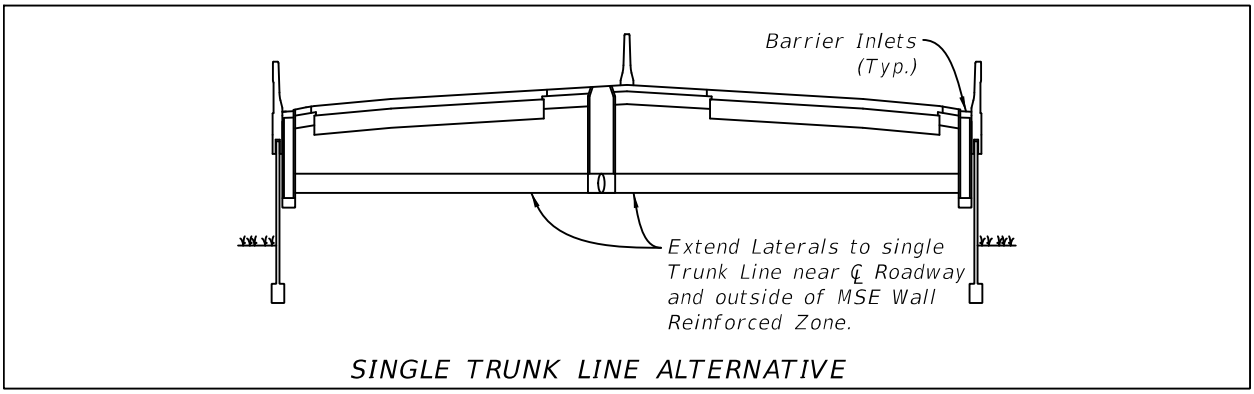

Figure 22.4-4 Drainage Double Trunk Line Alternative

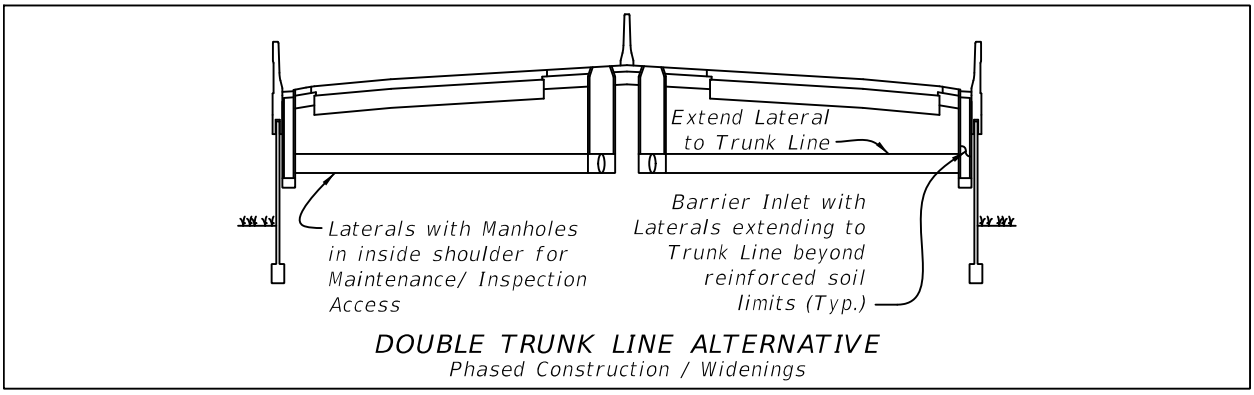

VOLUME 2 - REVISION HISTORY

Note that the format for references to LRFD, CPCH, PPM, Design Standards and Instructions for Design Standards has been revised in various locations throughout this Volume for consistency. There is no change to technical content in these instances.

1.2 .....Replaced Paragraph A.

4.3 .....Added Paragraph F.

5.1 .....Added new first sentence to Paragraph F.

5.2 .....Deleted Item 3 in Paragraph G. Added guidance on Traffic Control Plans notes and a reference to Design Standards Index 600 to Paragraph P.

6.1 .....Revised slope protection detail design aid links in Paragraph B.

9.1 .....Added new first sentence to Paragraph C.

9.2 .....Added requirements to show superstructure and substructure in Paragraphs A, B & G.

9.3 .....Added Paragraph I. Renumbered subsequent Paragraphs.

11.2 .....Added new Paragraph V.

11.3 .....Added third sentence to Paragraph E.

12.2 ..... Added clarification for bridges with horizontal curve geometry in Paragraph I.

12.5 .....Combined 12.5.E and 12.6.G and added criteria for top of drilled shaft elevations. Relocated and renumbered Figures 12.6-2 and 12.6-3. Added new Figures 12.5-2 and 12.5-4.

12.6 .....Relocated Paragraph G to 12.5.E and relocated Figures 12.6-2 and 12.6-3 to Section 12.5.

13.2 .....Relocated Figure 13.2-2 to Chapter 22. Redirected cross reference in Paragraph J.

13.5 .....Revised minimum footing depth requirements in Paragraph G. Revised Figure 13.5-3. Added Figure 13.5-4.

13.7 .....Deleted "minimum" from pile embedment requirement in Paragraph E.

13.8 .....Updated link and reference to the Bridge Aesthetics Sourcebook.

13.10 .....Added Paragraph I.

13.11 .....Added Paragraph C.

13.12 .....Added Paragraphs C and D.

13.13 .....Added Paragraph A, renumbered subsequent Paragraphs and added Paragraphs I and J.

14.2 .....Split Paragraph A and added clarification. Renumbered Section.

14.4 .....Added new Paragraphs H and I.

15.2 .....Revised Item 3 per Structures Design Bulletin C10-05. Added "intermediate" to Paragraph F.

15.3 .....Added reference to Paragraph O.

15.4 .....Added second sentence to Paragraph B.

15.5 .....Deleted previous Section 15.5 (Superstructure Drawings - Concrete Diaphragms) per Structures Design Bulletin C10-05 and renumbered subsequent Sections. Renumbered Section 15.5 (previously section 15.6) revised per Structures Design Bulletin C10-05.

15.6 .....Renumbered Section (previously 15.7). Revised first Paragraph. Relocated specific requirements and Figure 15.6-1 Chapter 22.

15.7 .....Renumbered Section (previously 15.8).

15.8 .....Renumbered Section (previously 15.9). Revised per Structures Design Bulletin C10-05. Added Commentary to Paragraph B.

15.9 .....Renumbered Section (previously 15.10). Revised title for Figure 15.9-1. Revised first sentence in Paragraph B. Revised Figures 15.9-2 through 15.9-5.

16.6 .....Added last sentence to Paragraph B. Changed "web" to "top flange" in Paragraph H. Revised Figure 16.6-4.

16.8 .....Revised Figures 16.8-1 and 16.8-2.

16.9 .....Added clarifications to Items 2 and 3 in Paragraph B. Revised Figures 16.9-1 and 16.9-2.

16.11 .....Revised weld and closure pour requirements in Paragraphs F and G. Revised Figure 16.11-5.

19 .....New Chapter.

20 .....New Chapter.

21 .....New Chapter.

22 .....New Chapter.