Figure 7-1 Flat Slab

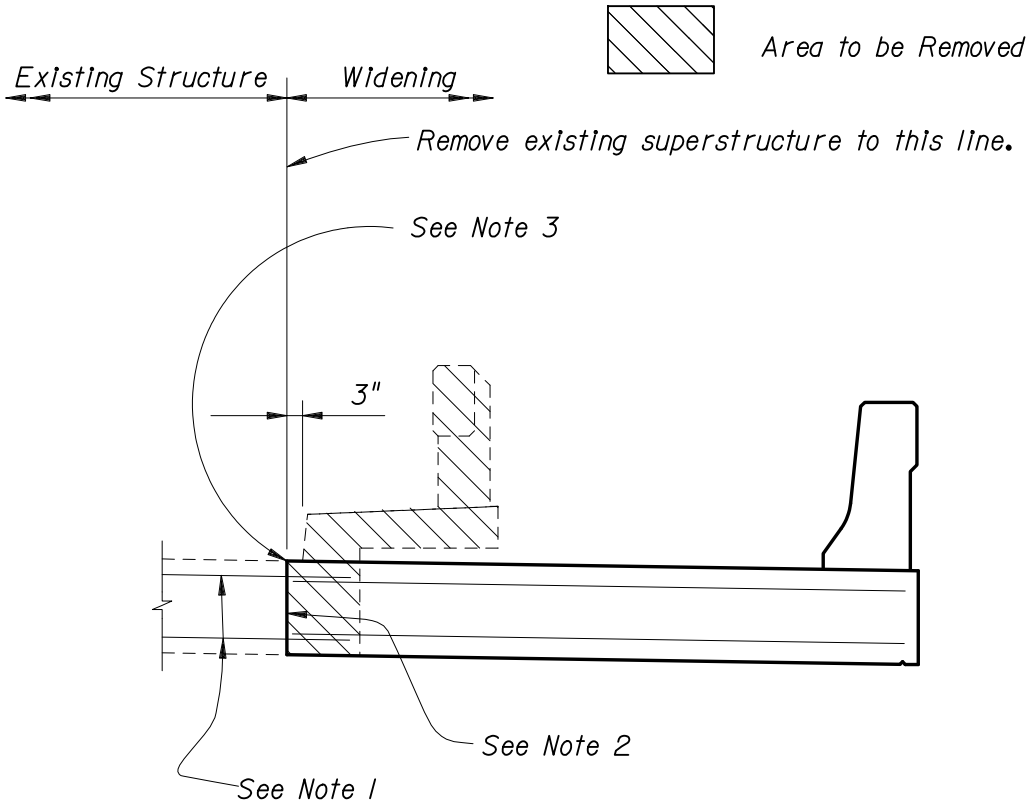

NOTES:

1. Existing transverse reinforcing to remain in place.
   Clean bars, straighten and embed into the slab widening. If bars are broken or otherwise determined to be unsatisfactory by the Engineer, replace with dowel bars as shown in Figure 7-4.
2. Clean all contacting surfaces between the old and new concrete immediately before casting concrete.
3. Score concrete for full length of span by sawing to top of reinforcing Avoid damaging reinforcing steel during sawing operation and slab removal.

WIDENING DETAIL FOR FLAT SLAB SUPERSTRUCTURE