Figure 3-12 Soil Nail Wall

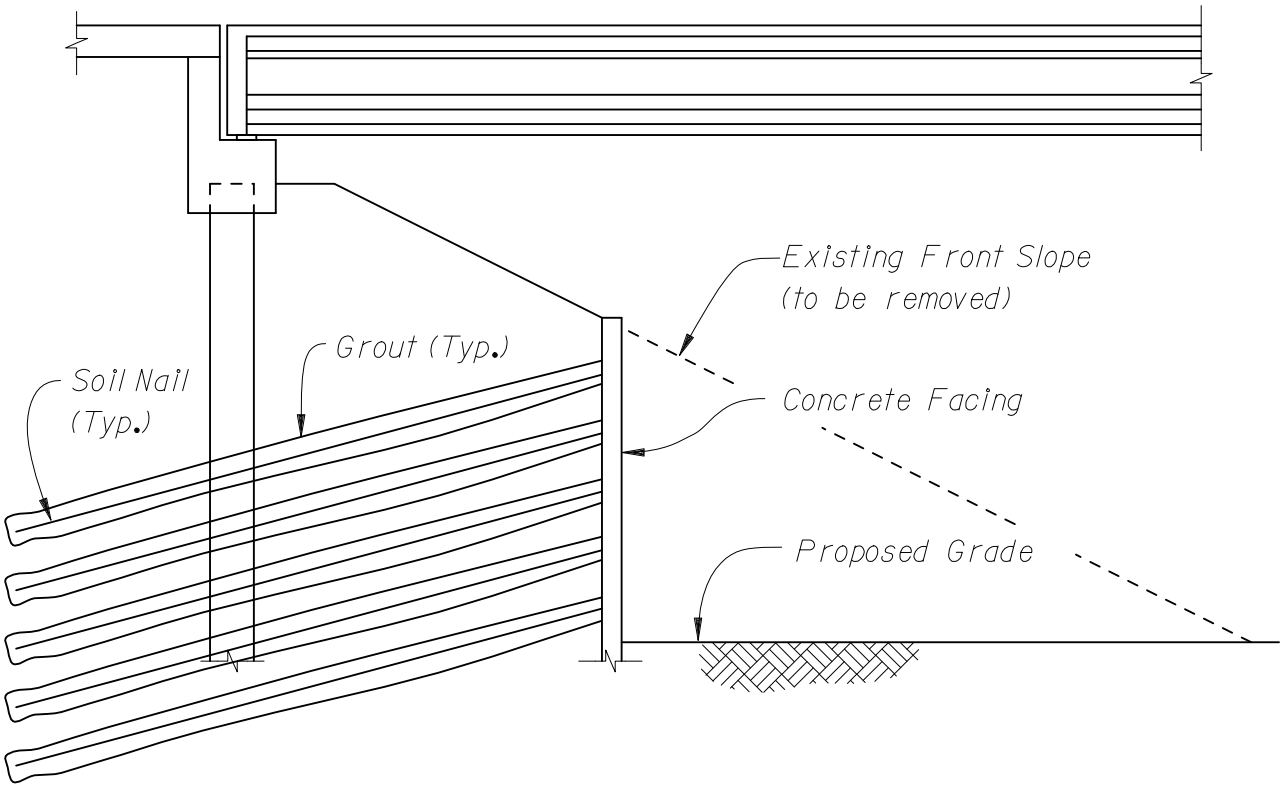

SOIL NAIL WALL