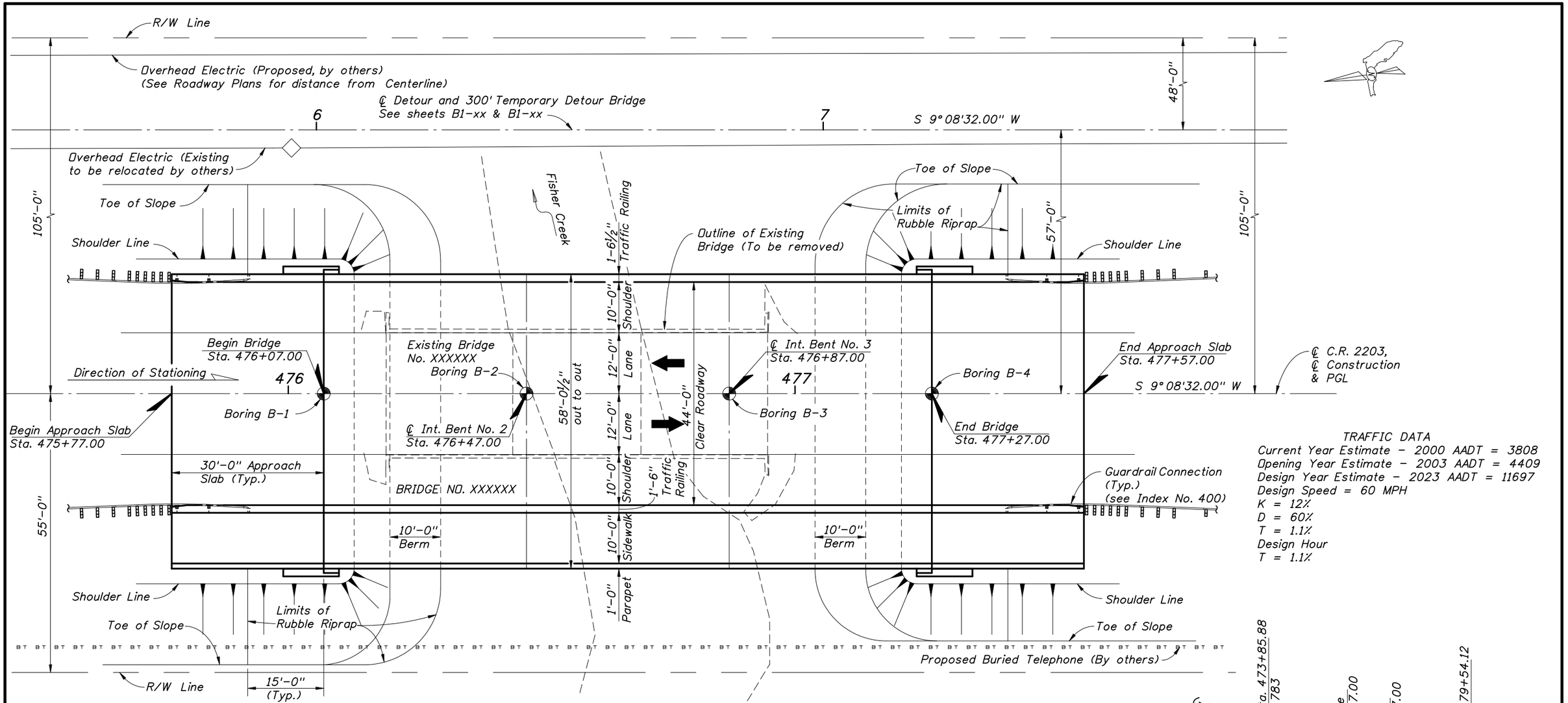

PLAN

TRAFFIC DATA
Current Year Estimate - 2000 AADT = 3808
Opening Year Estimate - 2003 AADT = 4409
Design Year Estimate - 2023 AADT = 11697
Design Speed = 60 MPH
K = 12%
D = 60%
T = 1.1%
Design Hour
T = 1.1%

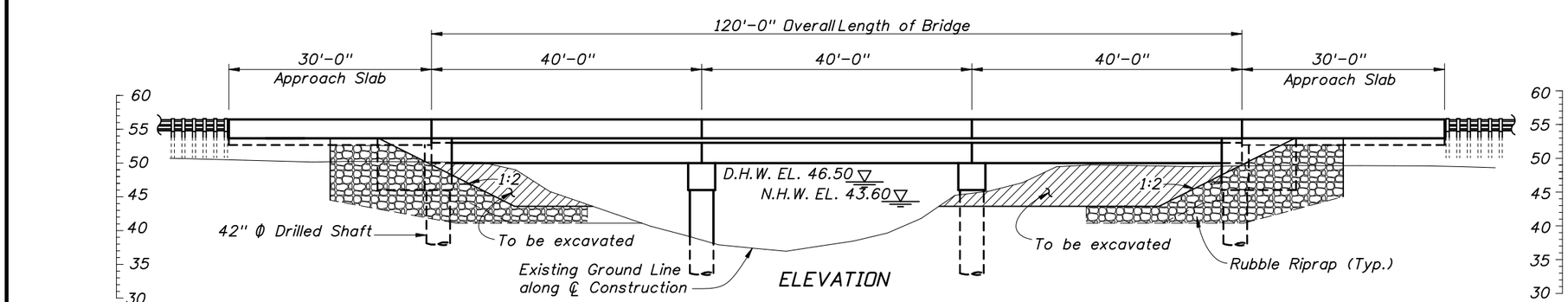

ELEVATION

(Existing Bridge to be removed and Temporary Bridge not shown for clarity)

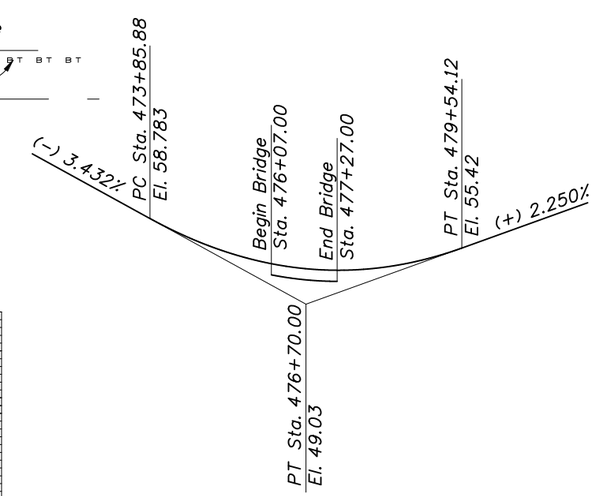

VERTICAL CURVE DATA

BRIDGE NO. XXXXXX

NOTICE: THE OFFICIAL RECORD OF THIS SHEET IS THE ELECTRONIC FILE SIGNED AND SEALED UNDER RULE 61G15-23.003, F.A.C.

REVISIONS					
DATE	BY	DESCRIPTION	DATE	BY	DESCRIPTION

	NAMES	DATES
DRAWN BY	ABC	MO-YR
CHECKED BY	DEF	MO-YR
DESIGNED BY	GHI	MO-YR
CHECKED BY	JKL	MO-YR
APPROVED BY	MNO	

ENGINEER OF RECORD:
EOR Name, P.E.
Registration/P.E. No. 000000
Engineering Co. Name/Logo
Address
Certificate of Authorization No.

FLORIDA DEPARTMENT OF TRANSPORTATION

ROAD NO.	COUNTY	FINANCIAL PROJECT ID
XXX	XXXX	123456-1-52-12

SHEET TITLE: PLAN AND ELEVATION

PROJECT NAME: DETAILING MANUAL EXAMPLES

SHEET NO. EX-7

$USER$ $DATE$ $TIME$ $FILE$