CONCRETE FINISHES

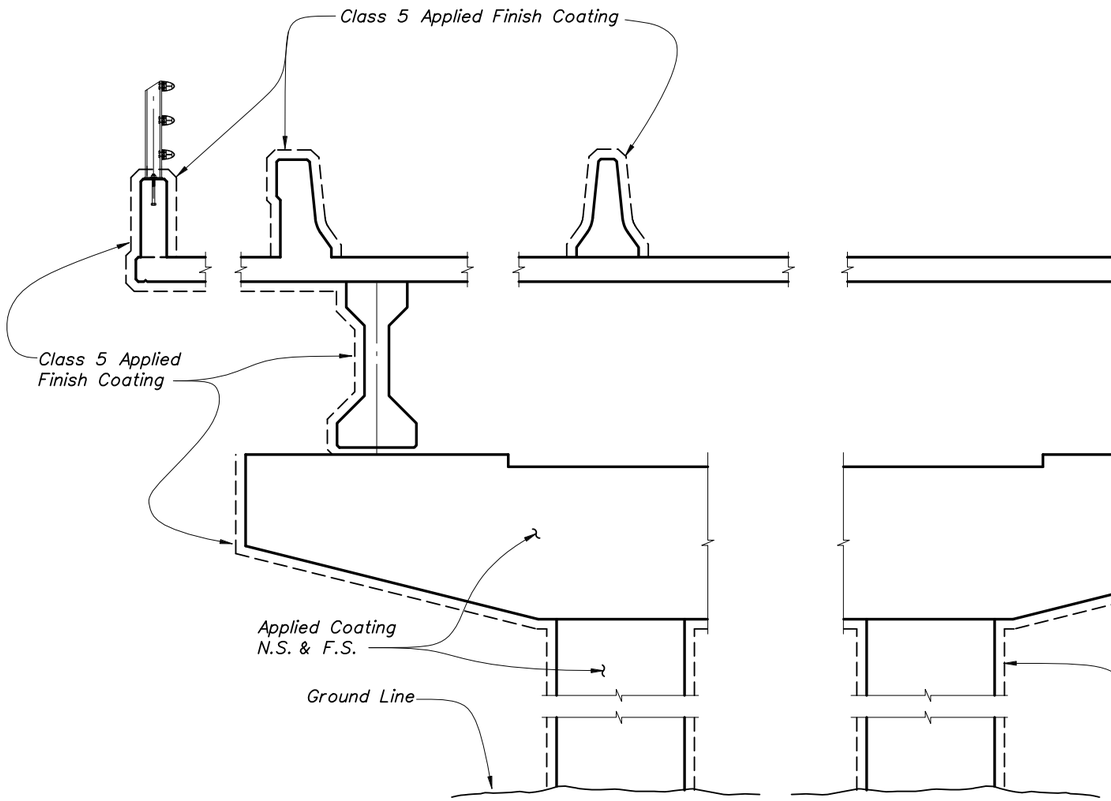

GRADE SEPARATION STRUCTURES

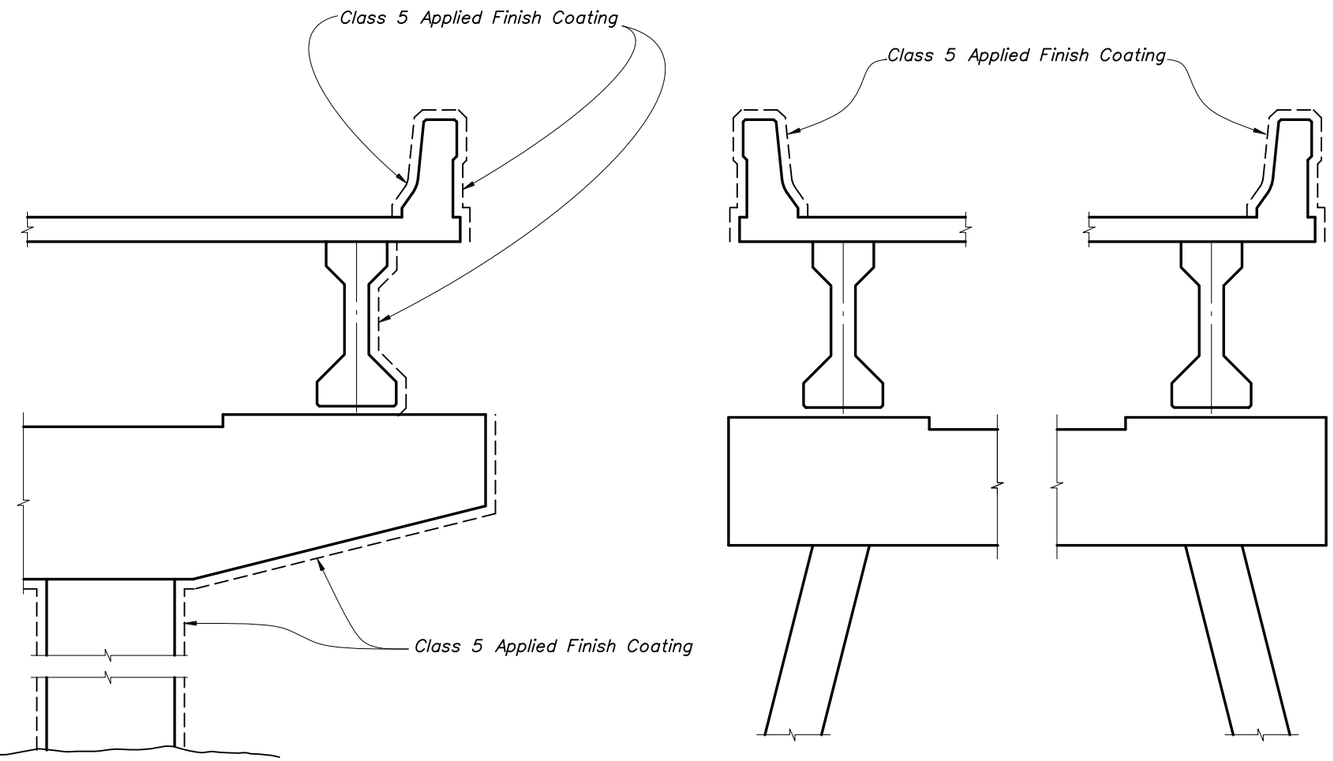

WATERWAY CROSSINGS AND R.R. SEPARATION STRUCTURES

GRADE SEPARATION STRUCTURES:
Apply a Class 5 Finish Coating to all exposed surfaces seen in Elevation, see detail above, as well as exposed surfaces of end bent wingwalls and all exposed surfaces of piers above ground line except tops of caps.

WATERWAY CROSSINGS AND RAILROAD SEPARATION STRUCTURES:
Apply a Class 5 Finish Coating to all exposed surfaces (top, inside and outside) of end bent wing walls, traffic barriers, median barrier and deck slab coping (see detail above).

C.I.P. RETAINING WALLS:
Apply a Class 5 Finish coating to all exposed surfaces of C.I.P. retaining walls (when called for on the plans).

The intent of the notes at left is to coat surfaces seen by the motoring public. Judgement shall be used in determining surfaces to be coated on Waterway and Railroad Structures in urban areas.

BRIDGE NO. XXXXXX

REVISIONS

DATE	BY	DESCRIPTION	DATE	BY	DESCRIPTION

	NAMES	DATES
DRAWN BY	ABC	MO-YR
CHECKED BY	DEF	MO-YR
DESIGNED BY	GHI	MO-YR
CHECKED BY	JKL	MO-YR
APPROVED BY	MNO	

ENGINEER OF RECORD:
EOR Name, P.E.
Registration/P.E. No. 000000
Engineering Co. Name/Logo
Address
Certificate of Authorization No.

FLORIDA DEPARTMENT OF TRANSPORTATION

ROAD NO.	COUNTY	FINANCIAL PROJECT ID
XXX	XXXX	123456-1-52-12

SHEET TITLE: CLASS 5 APPLIED FINISH COATING

PROJECT NAME: DETAILING MANUAL EXAMPLES

SHEET NO. EX-6

$USER$ $DATE$ $TIME$ $FILE$

NOTICE: THE OFFICIAL RECORD OF THIS SHEET IS THE ELECTRONIC FILE SIGNED AND SEALED UNDER RULE 61G15-23.003, F.A.C.