Figure 3-1 Proprietary Retaining Walls

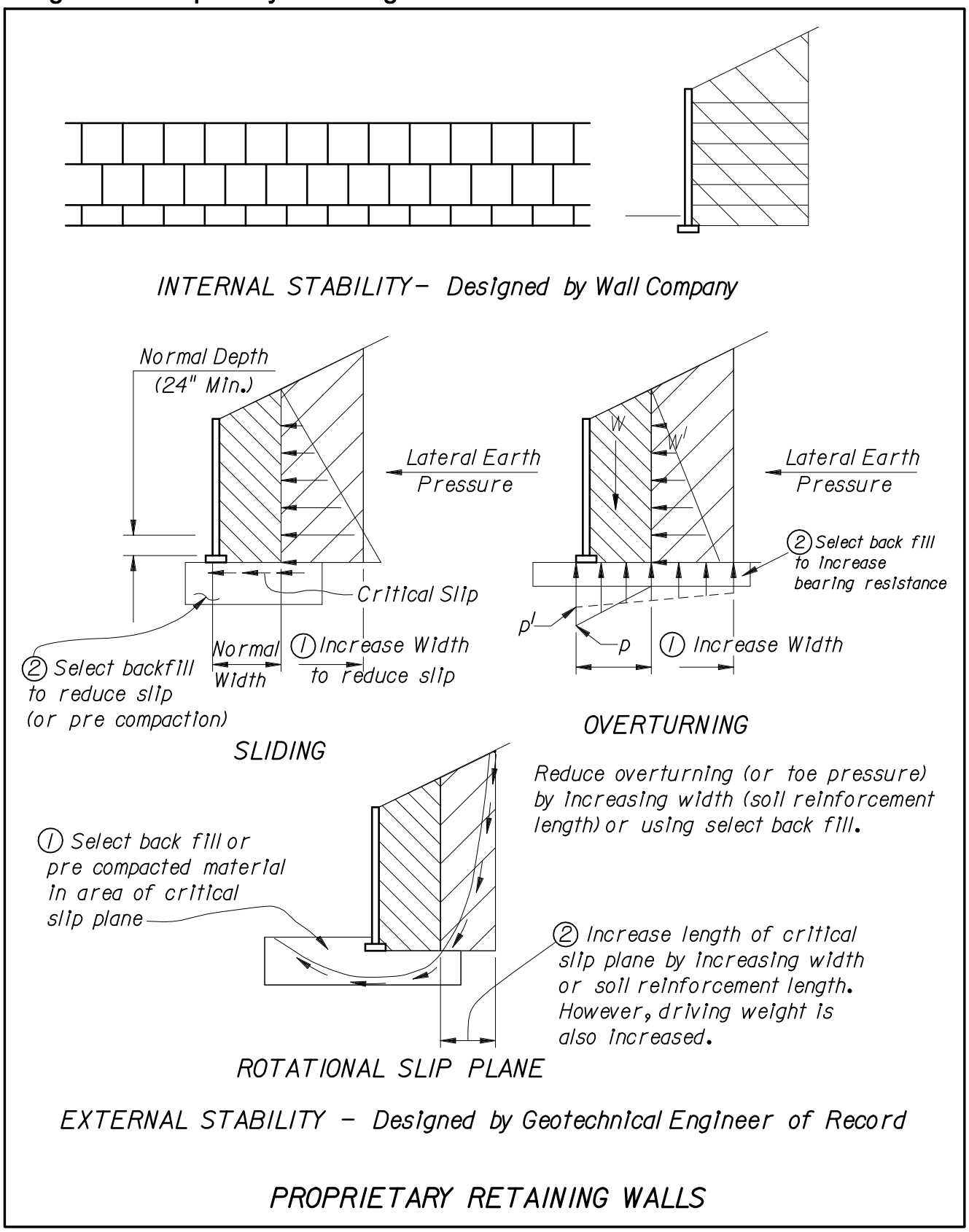

Figure 3-2 Cast-In-Place Wall (Fill Location)

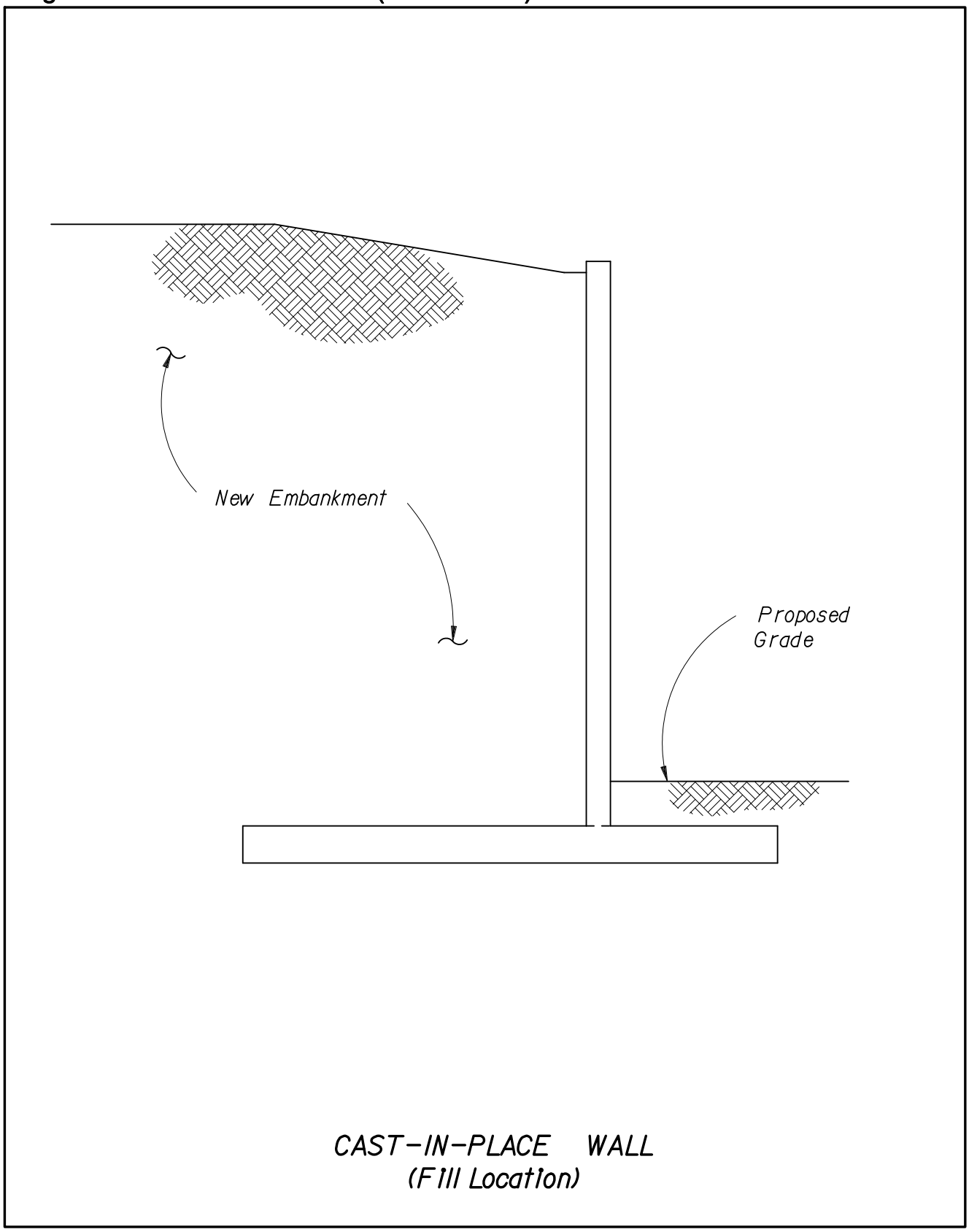

Figure 3-3 Cast-In-Place Wall (Cut Location)

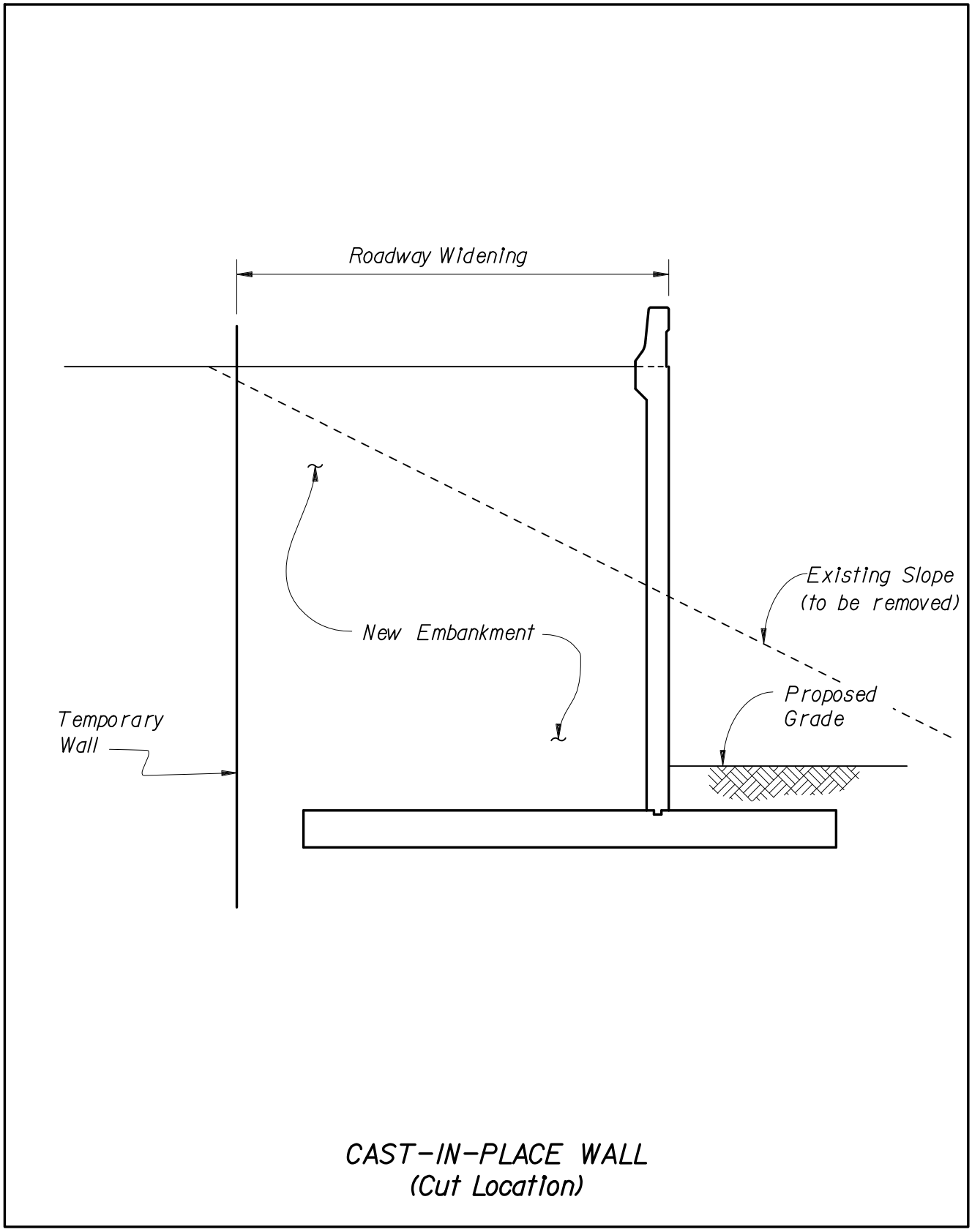

Figure 3-4 Cast-In-Place Wall - Pile Supported (Fill Location)

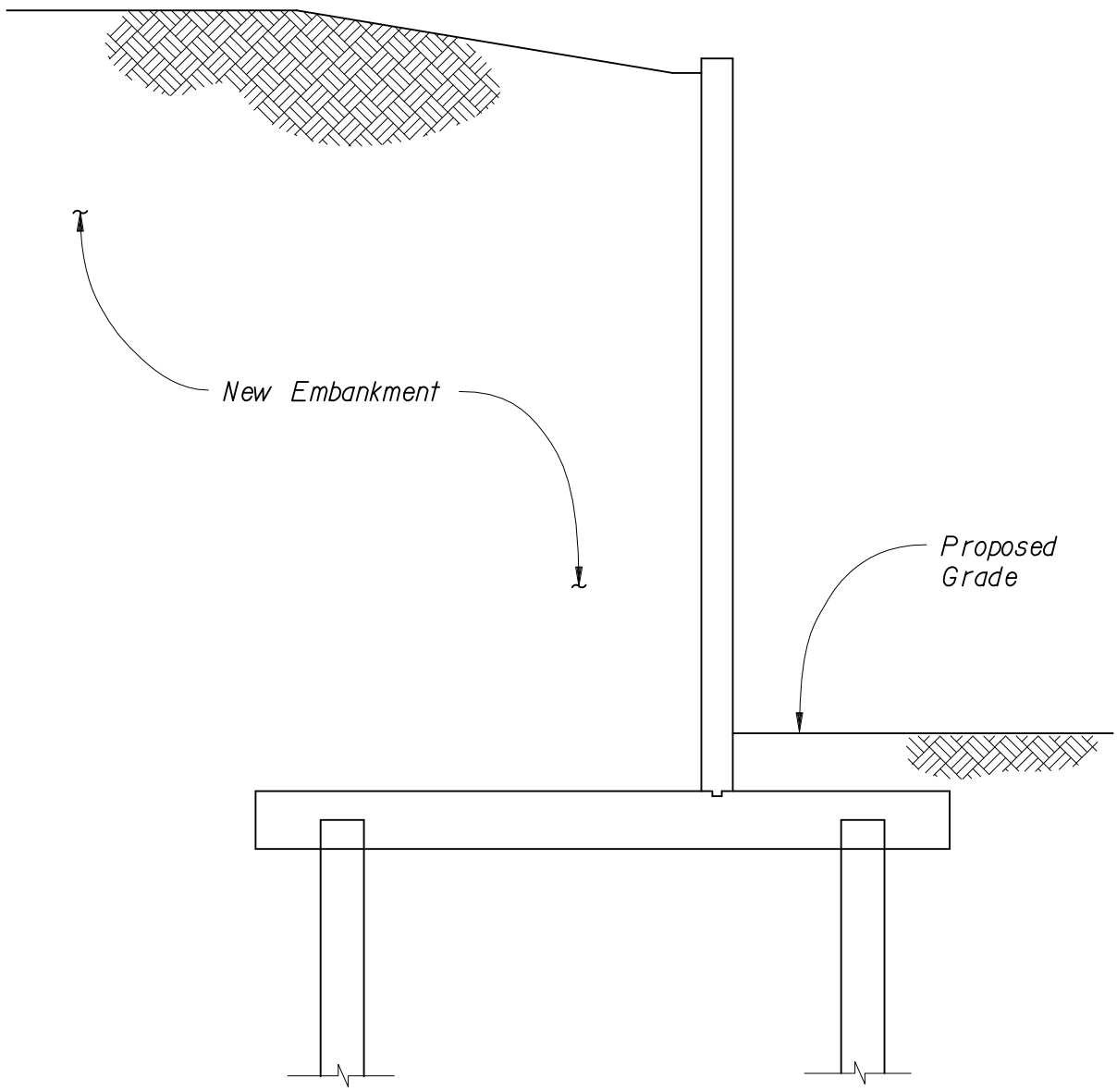

CAST-IN-PLACE WALL - PILE SUPPORTED
(Fill Location)

Figure 3-5 Cast-In-Place Wall - Pile Supported (Cut Location)

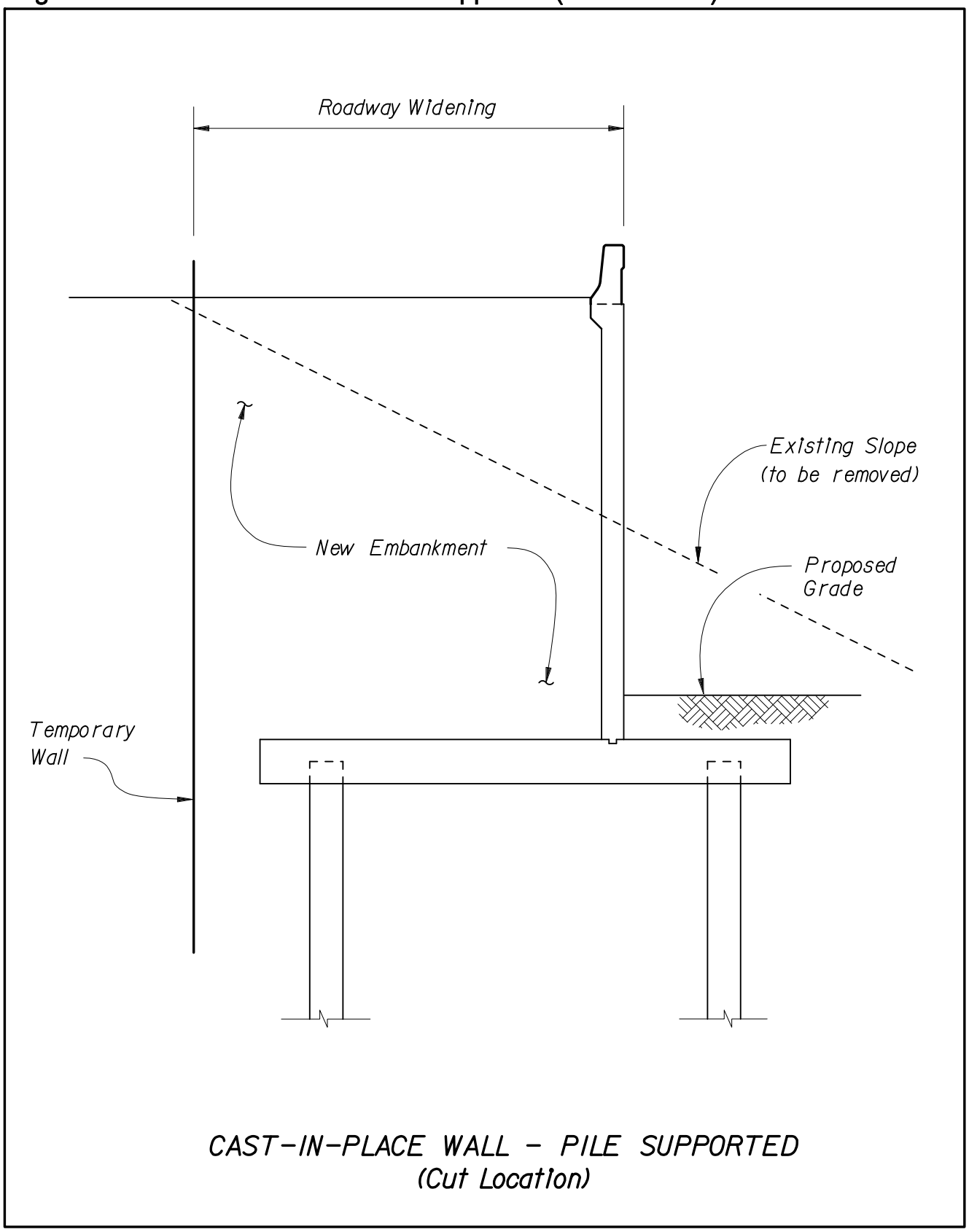

Figure 3-6 MSE Wall (Fill Location)

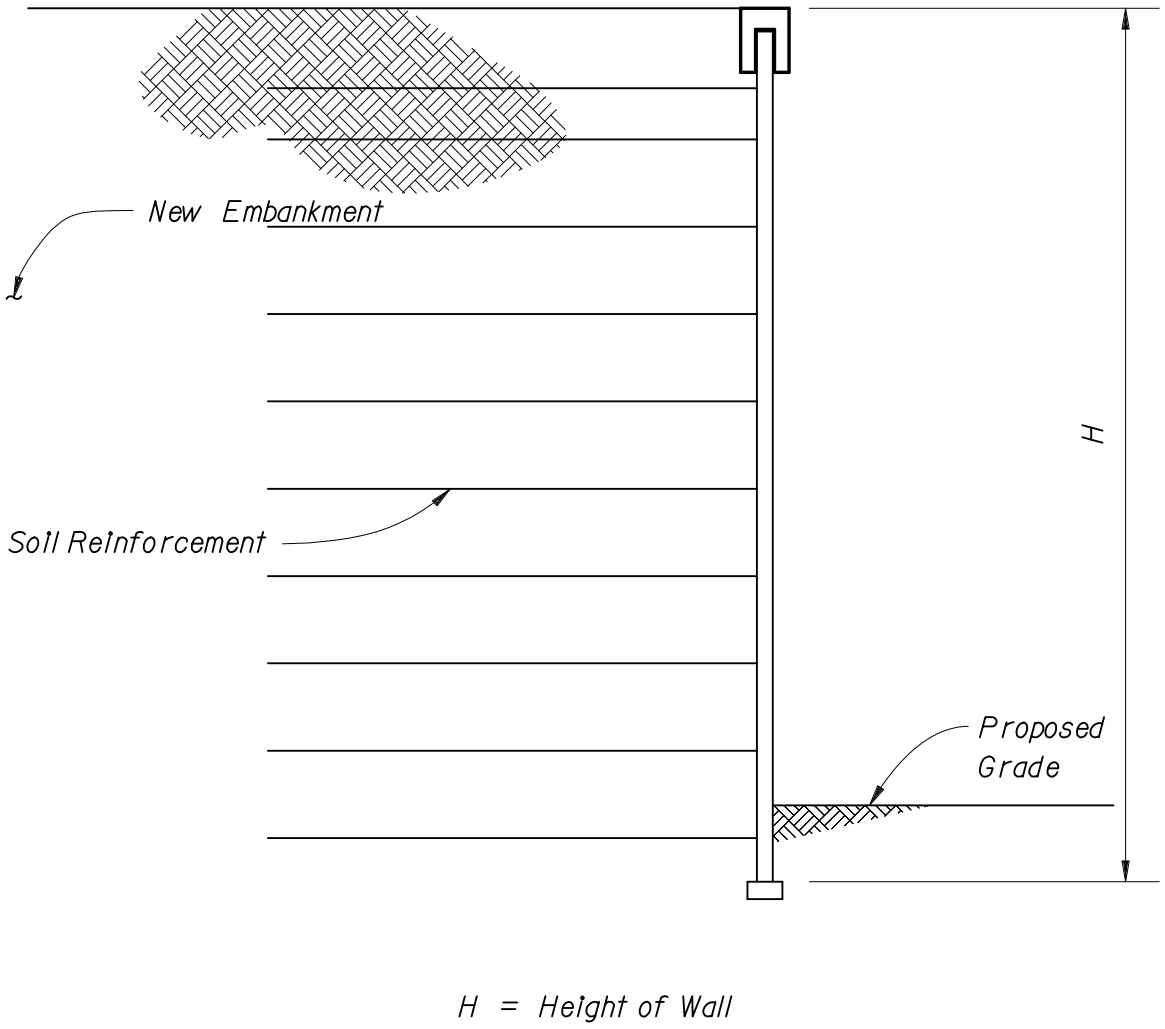

MSE WALL
(Fill Location)

Figure 3-7 MSE Wall (Cut Location)

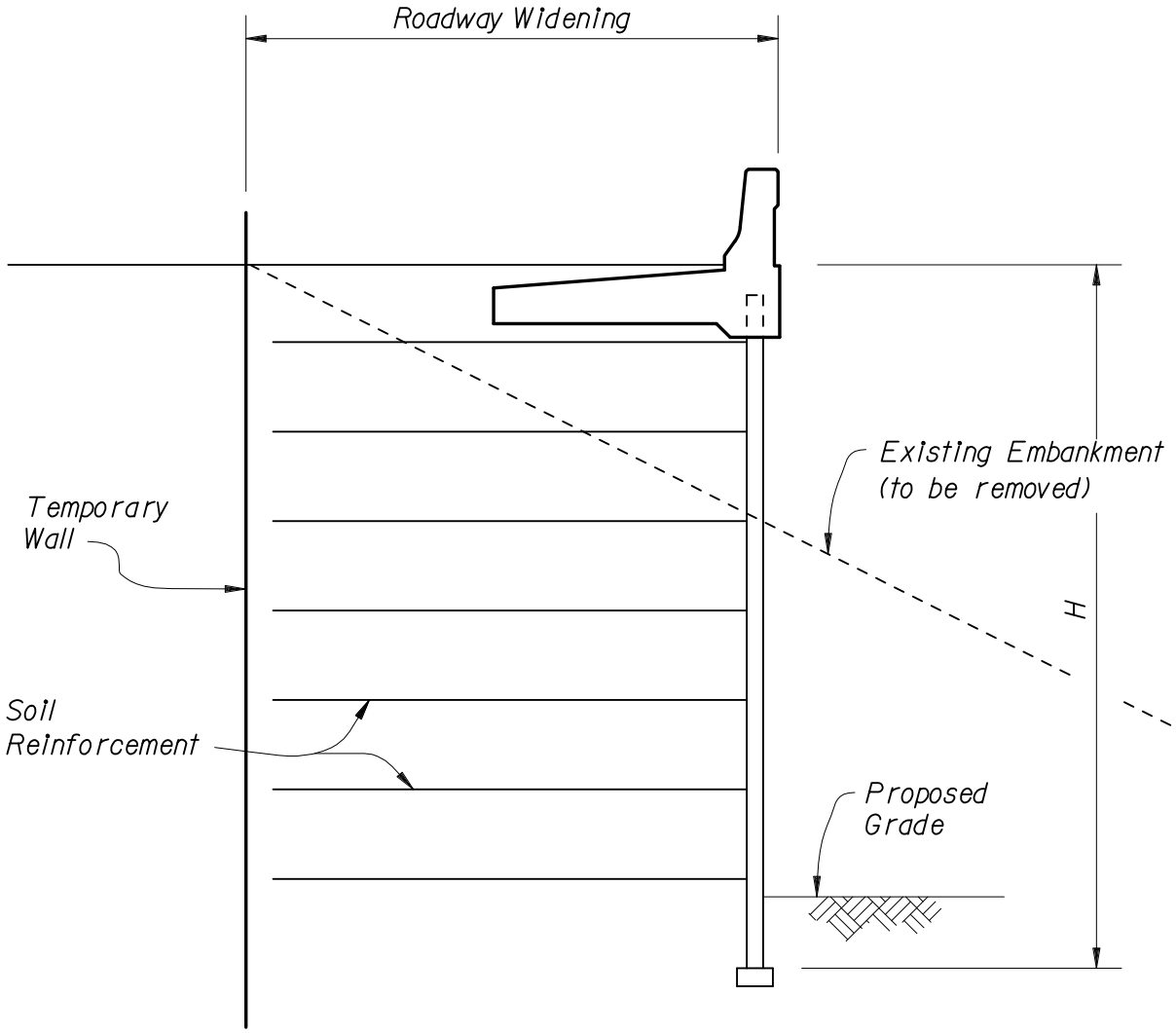

H = Height of Wall

MSE WALL
(Cut Location)

Figure 3-8 Precast Counterfort Wall

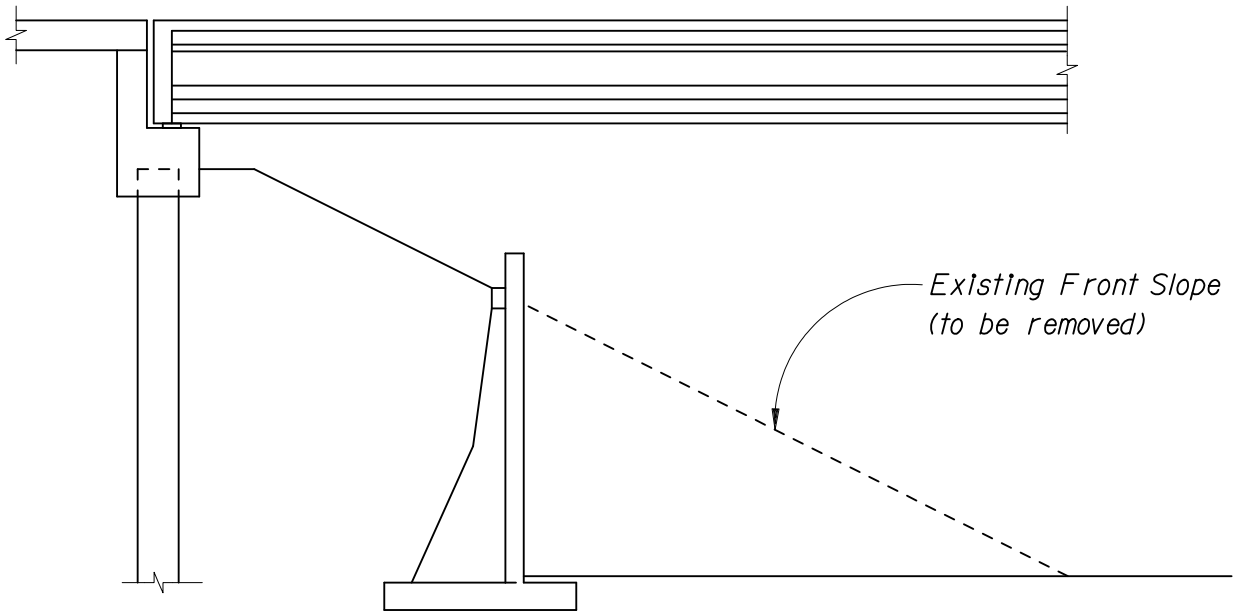

PRECAST COUNTERFORT WALL

Figure 3-9 Tieback Components (Steel Sheet Piles)

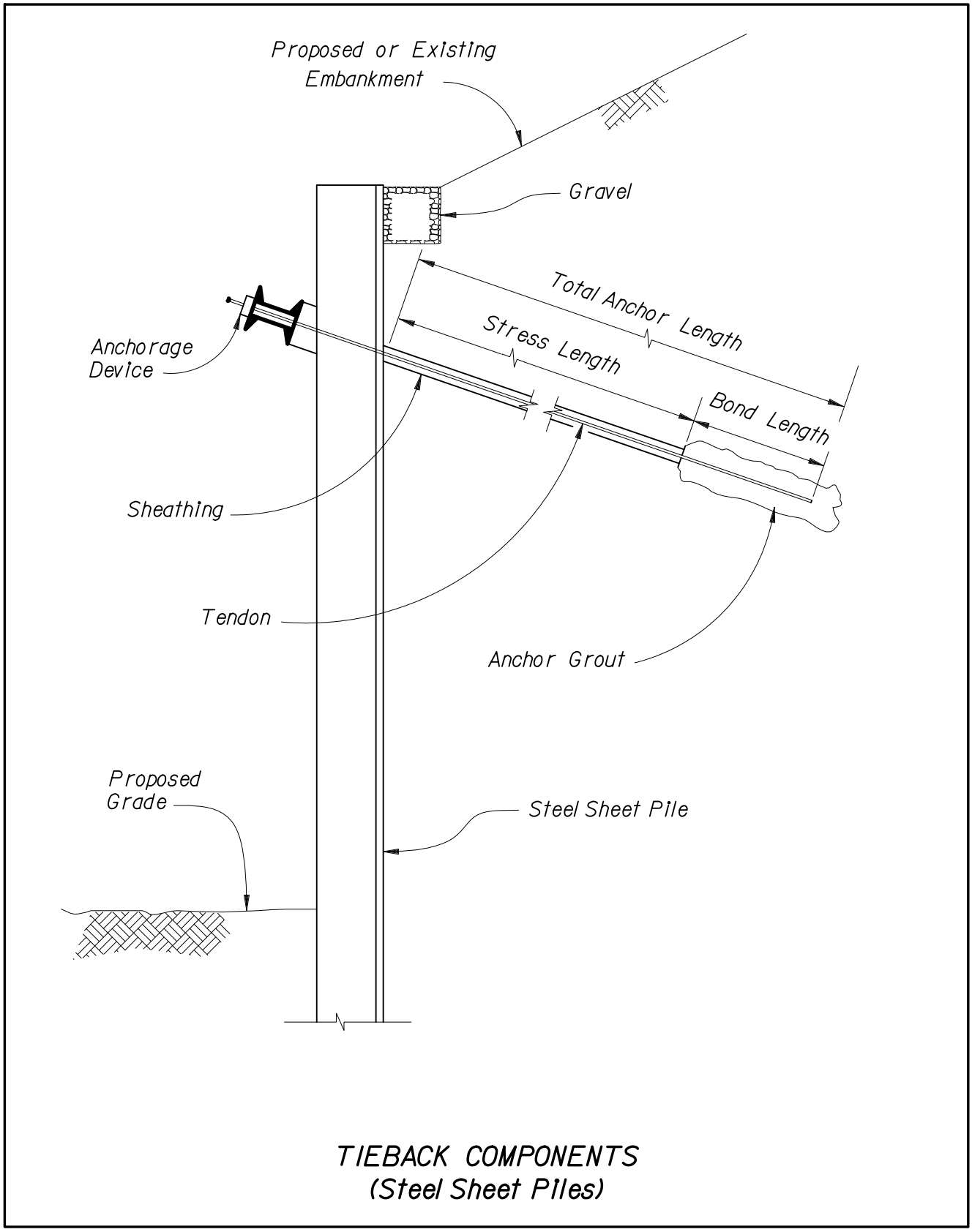

Figure 3-10 Concrete Sheet Pile Bulkhead

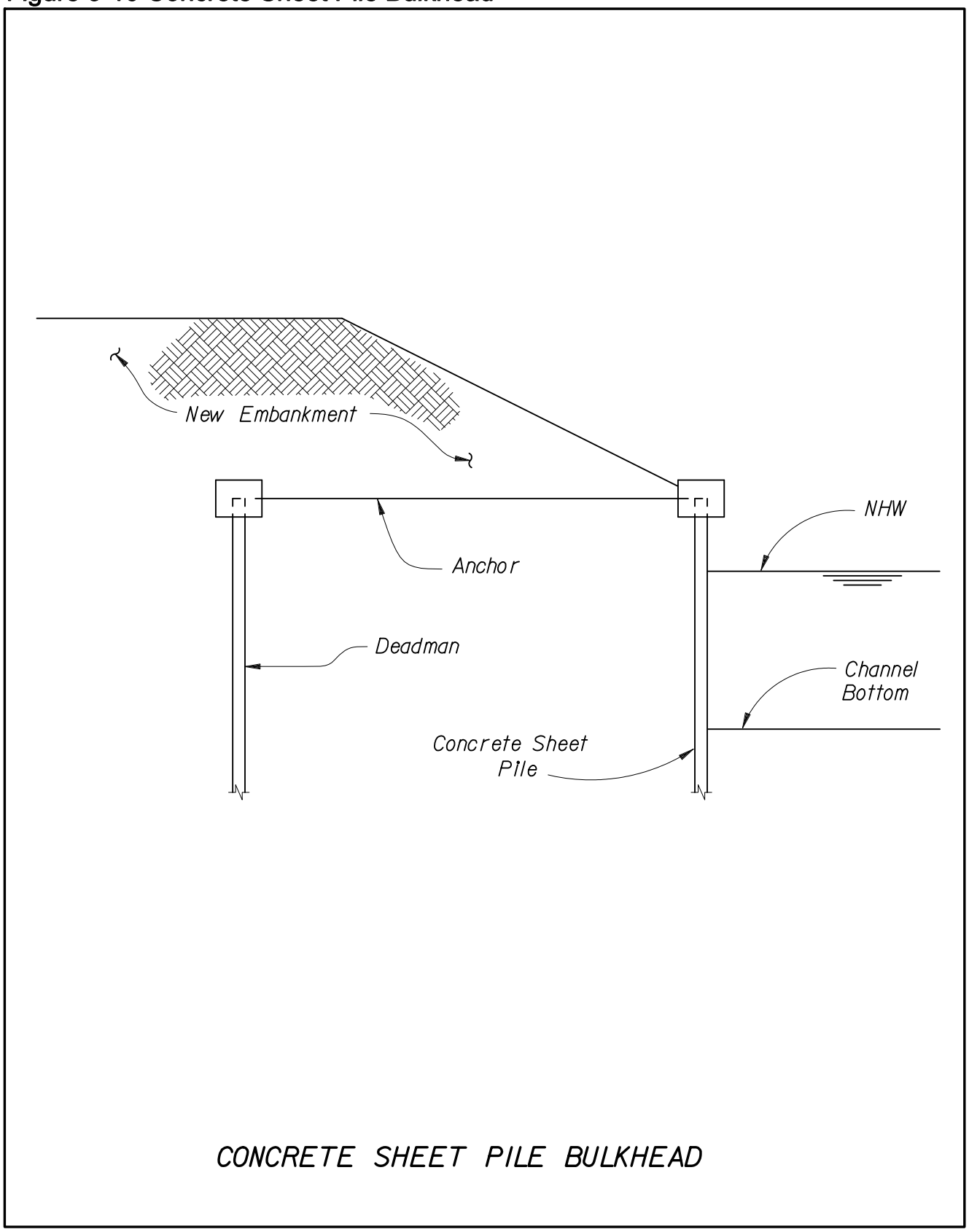

Figure 3-11 Wire-Faced - MSE Wall (For Temporary Wall Only)

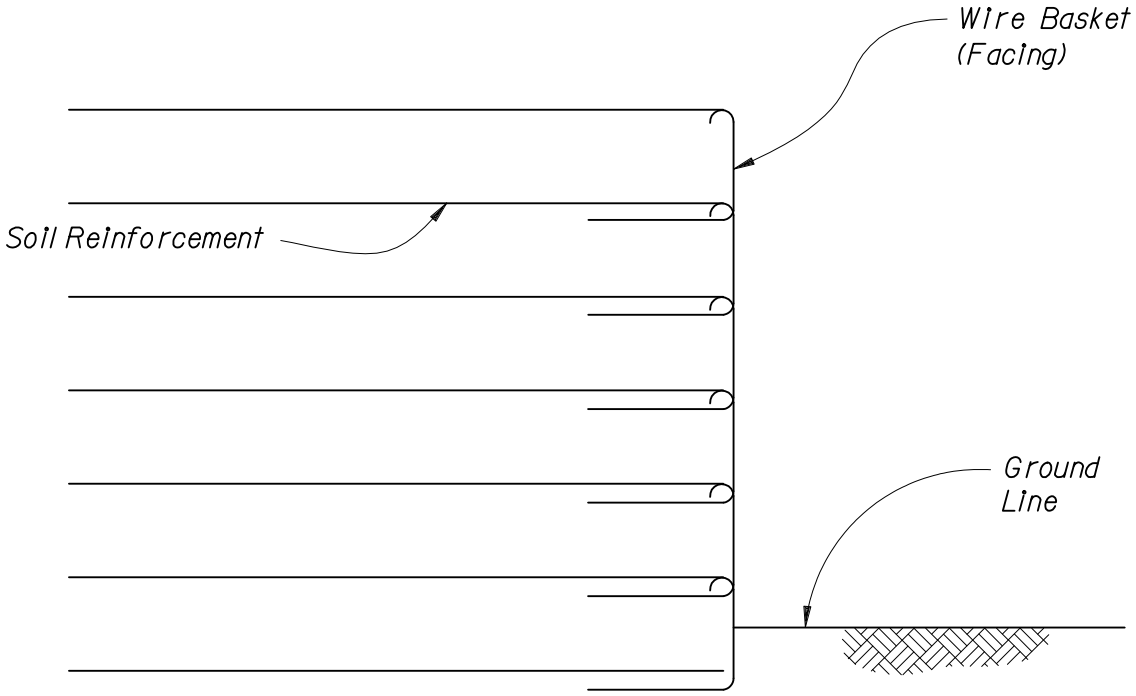

WIRE FACED - MSE WALL
(For Temporary Wall Only)

Figure 3-12 Soil Nail Wall

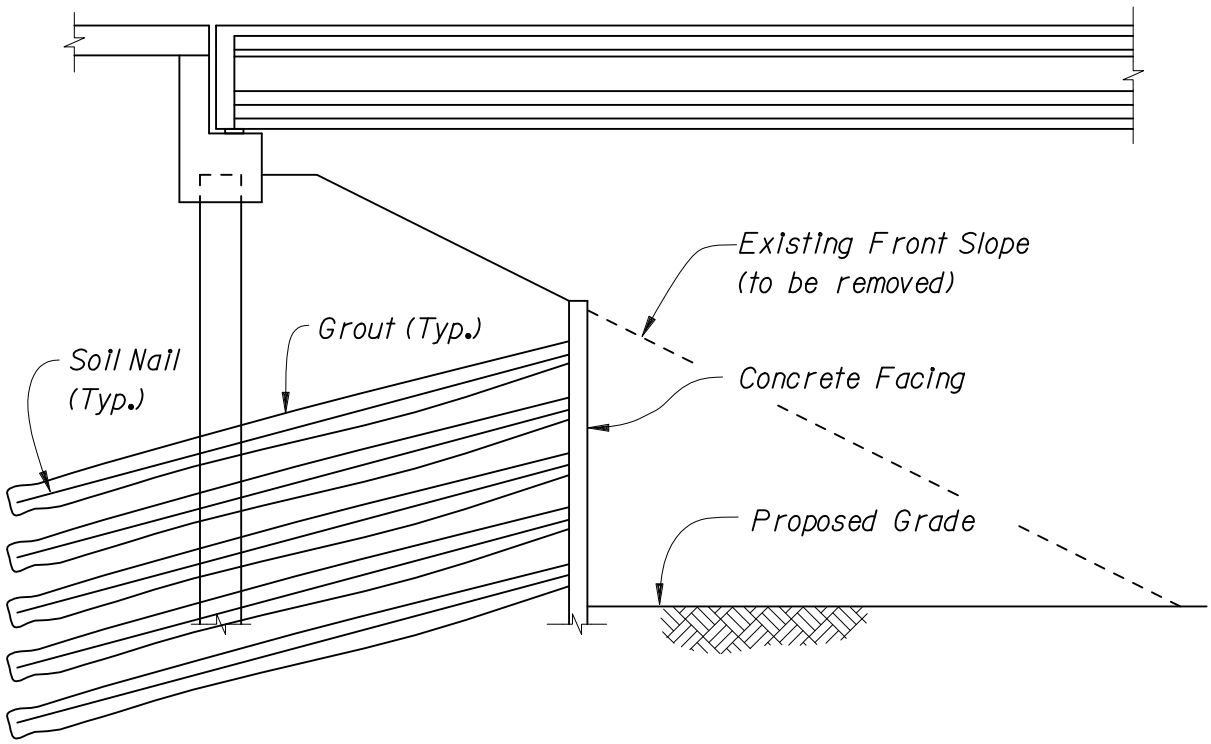

SOIL NAIL WALL

Figure 3-13 Soldier Pile / Panel Wall

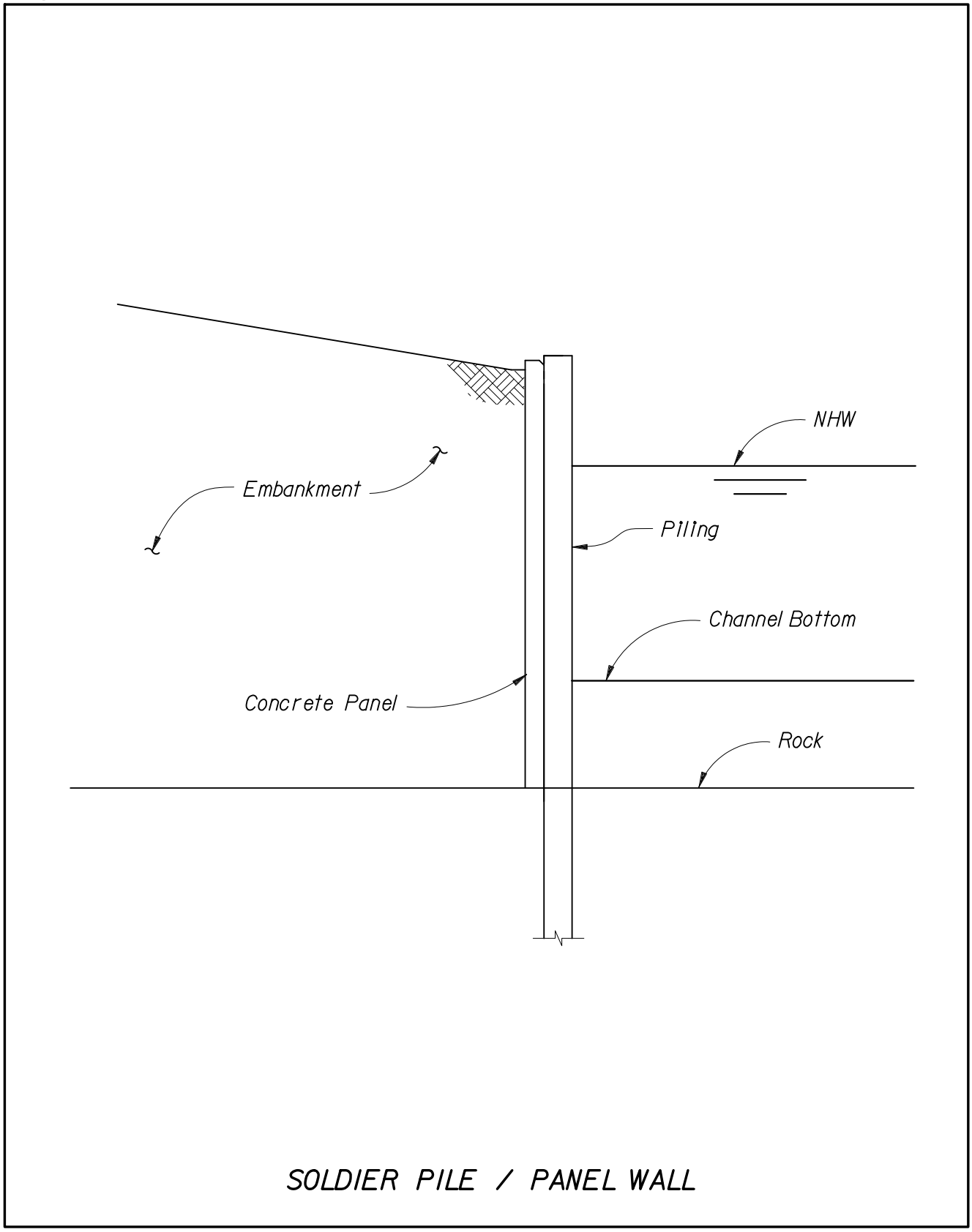

Figure 3-14 Tieback Components (Soldier Piles)

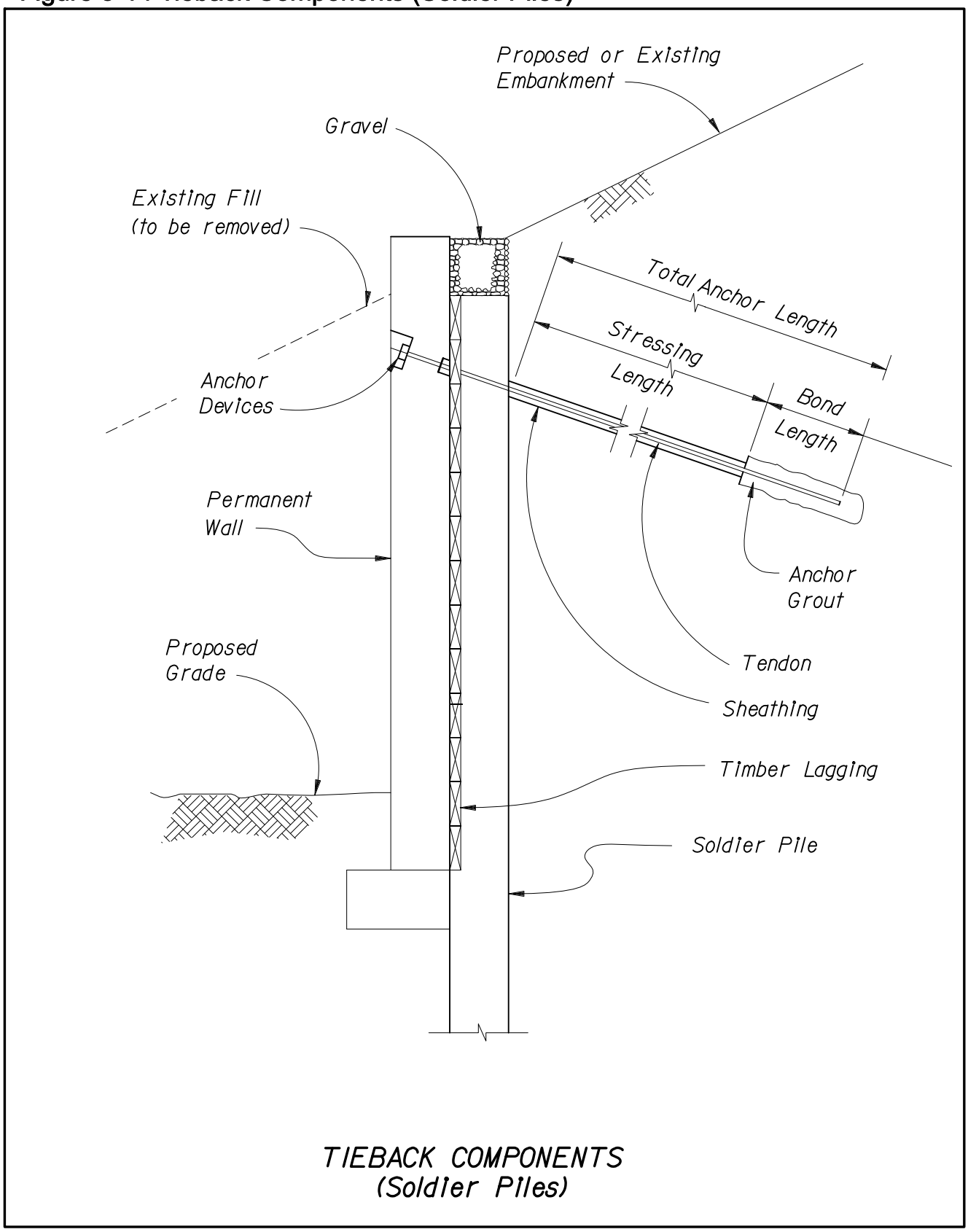

Figure 3-15 Concrete Stem Wall System (Fill Location)

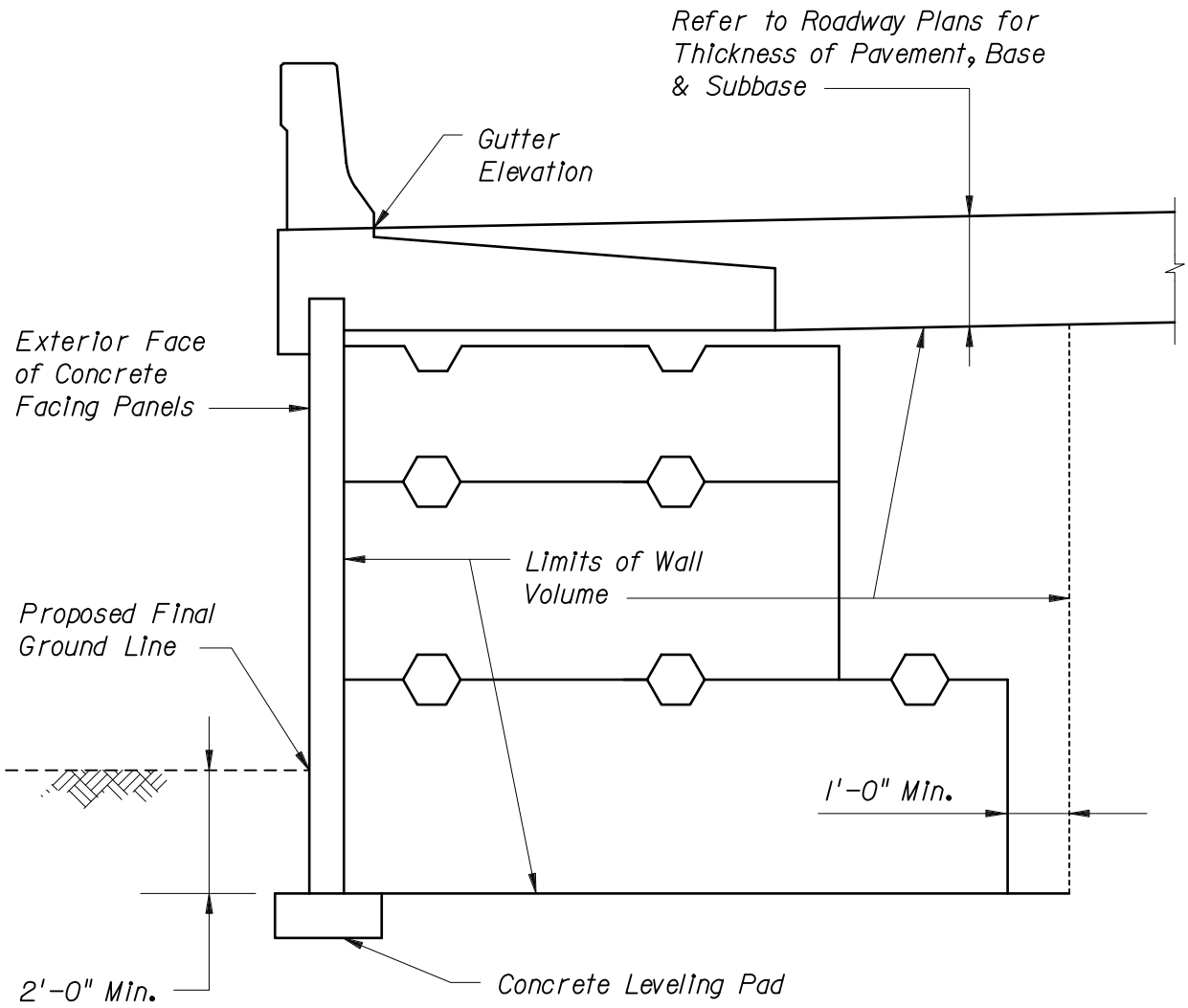

CONCRETE STEM WALL SYSTEM
(Fill Location)

Figure 3-16 Broken Backfill with Traffic Surcharge

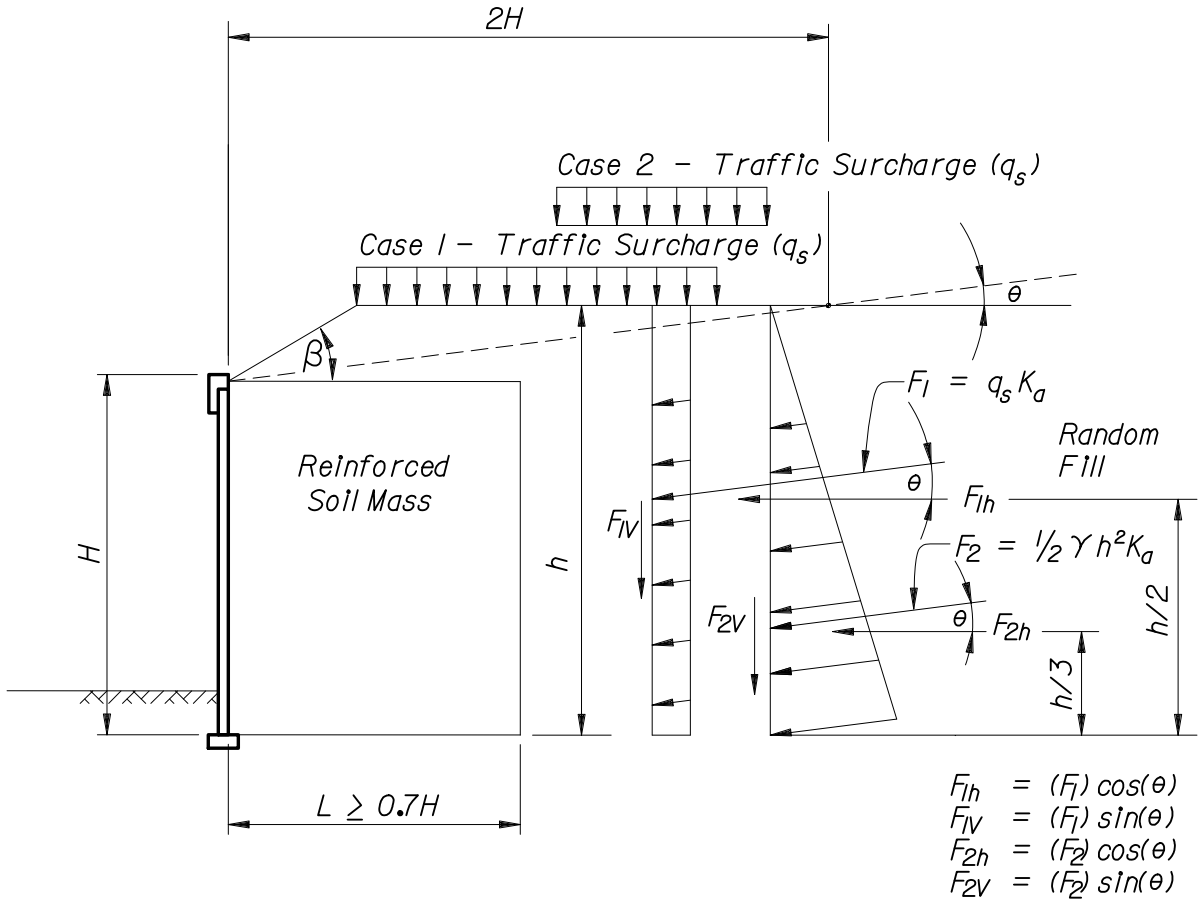

Case 1 - used for bearing resistance, reinforcement tensile resistance and overall stability calculations.

Case 2 - used for sliding, eccentricity, and reinforcement pullout resistance calculations.

K_a For Random Fill: $K_a = \cos(\theta) \left[\dfrac{\cos(\theta) - \sqrt{\cos^2(\theta) - \cos^2\phi}}{\cos(\theta) + \sqrt{\cos^2(\theta) - \cos^2\phi}} \right]$

ϕ = friction angle of back fill or foundation, whichever is lowest.

Loads shown are unfactored. Use appropriate load and resistance factors in analysis. (See Volume 7 - Design Aids, for the LRFD External Stability Analysis for MSE Walls program).

BROKEN BACK BACKFILL CASE WITH TRAFFIC SURCHARGE

Figure 3-17 Broken Back Backfill without Traffic Surcharge

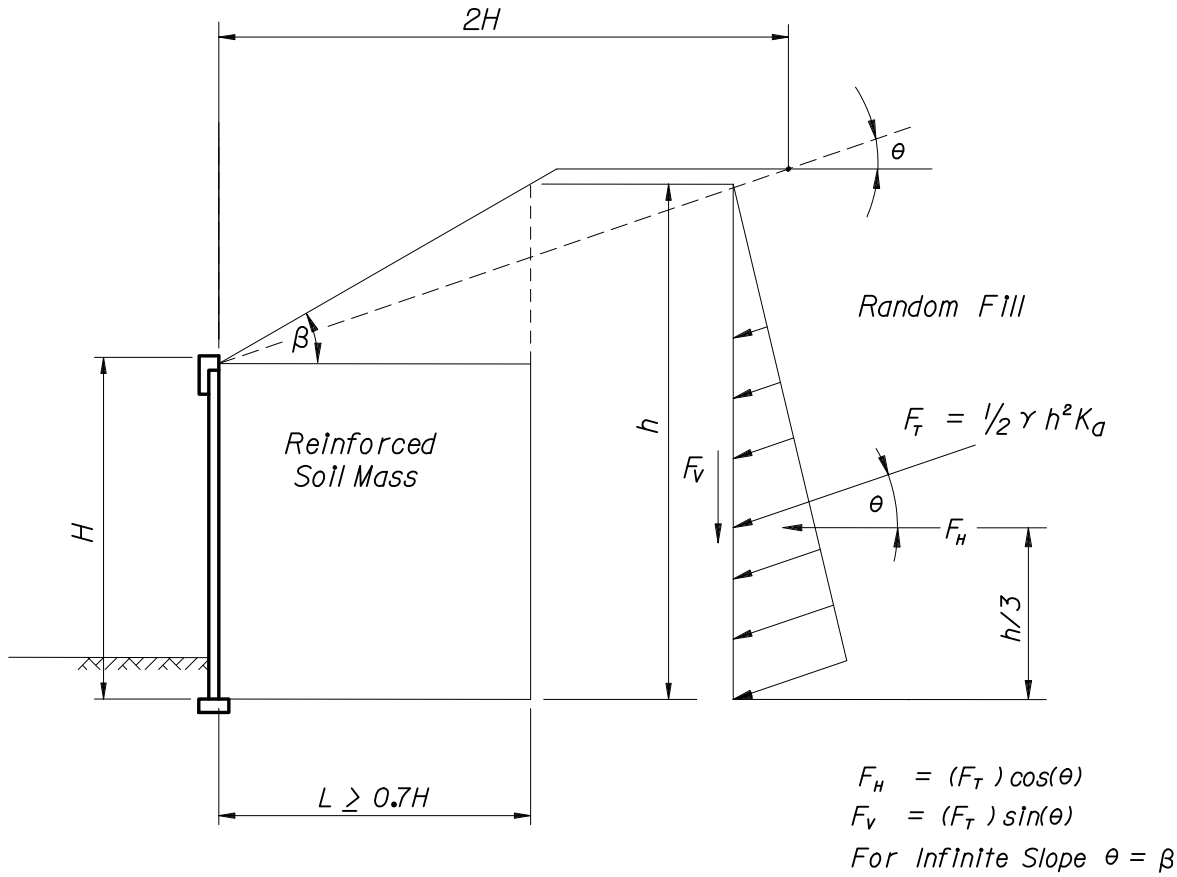

K_a For Random Fill: $K_a = \cos(\theta)\left[\dfrac{\cos(\theta) - \sqrt{\cos^2(\theta) - \cos^2\phi}}{\cos(\theta) + \sqrt{\cos^2(\theta) - \cos^2\phi}}\right]$

ϕ = Friction Angle of Back fill or Foundation, whichever is lowest.

Loads shown are unfactored. Use appropriate load and resistance factors in analysis. (See Volume 7 – Design Aids, for the LRFD External Stability Analysis for MSE Walls program).

BROKEN BACK BACKFILL CASE WITHOUT TRAFFIC SURCHARGE

Figure 3-18 Design Criteria for Acute Corners of MSE Bin Walls

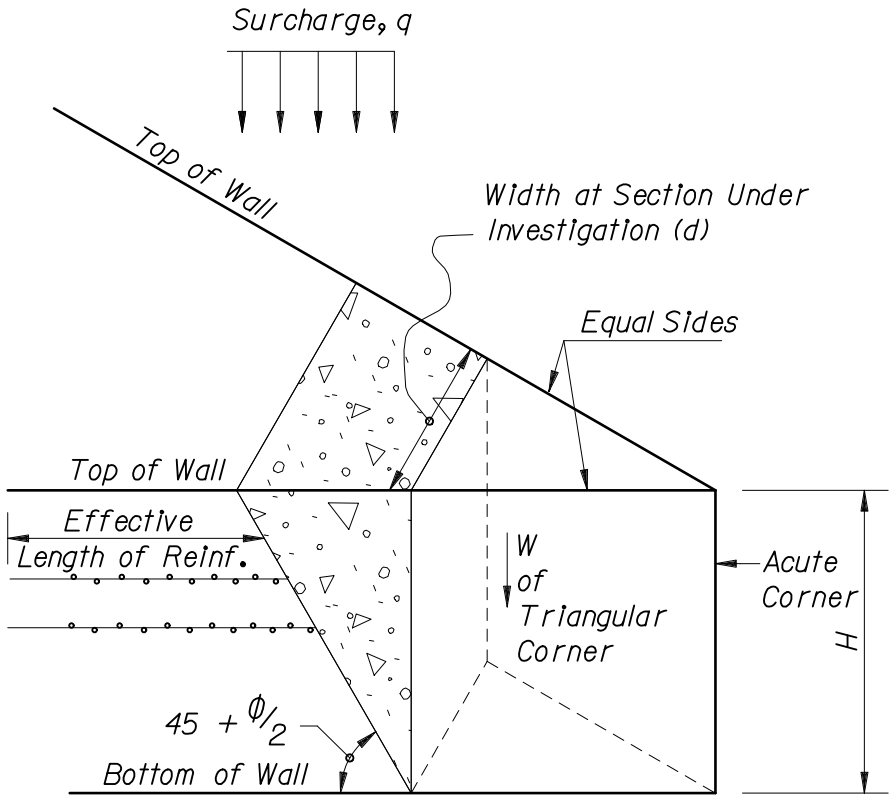

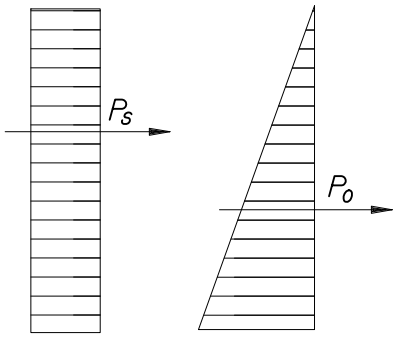

$P_o = \frac{1}{2} \gamma H^2 K_o$ [Width at Section Under Investigation]

$P_s = q H K_o$ [Width at Section Under Investigation]

Note : Analyze the acute corner at each Column of Panel Joints until no reinforcement beyond the failure surface is required (i.e. until the factored sliding resistance is greater than the factored horizontal earth loads).

DESIGN CRITERIA FOR ACUTE CORNERS

Figure 3-19 MSE Wall Minimum Front Face Embedment

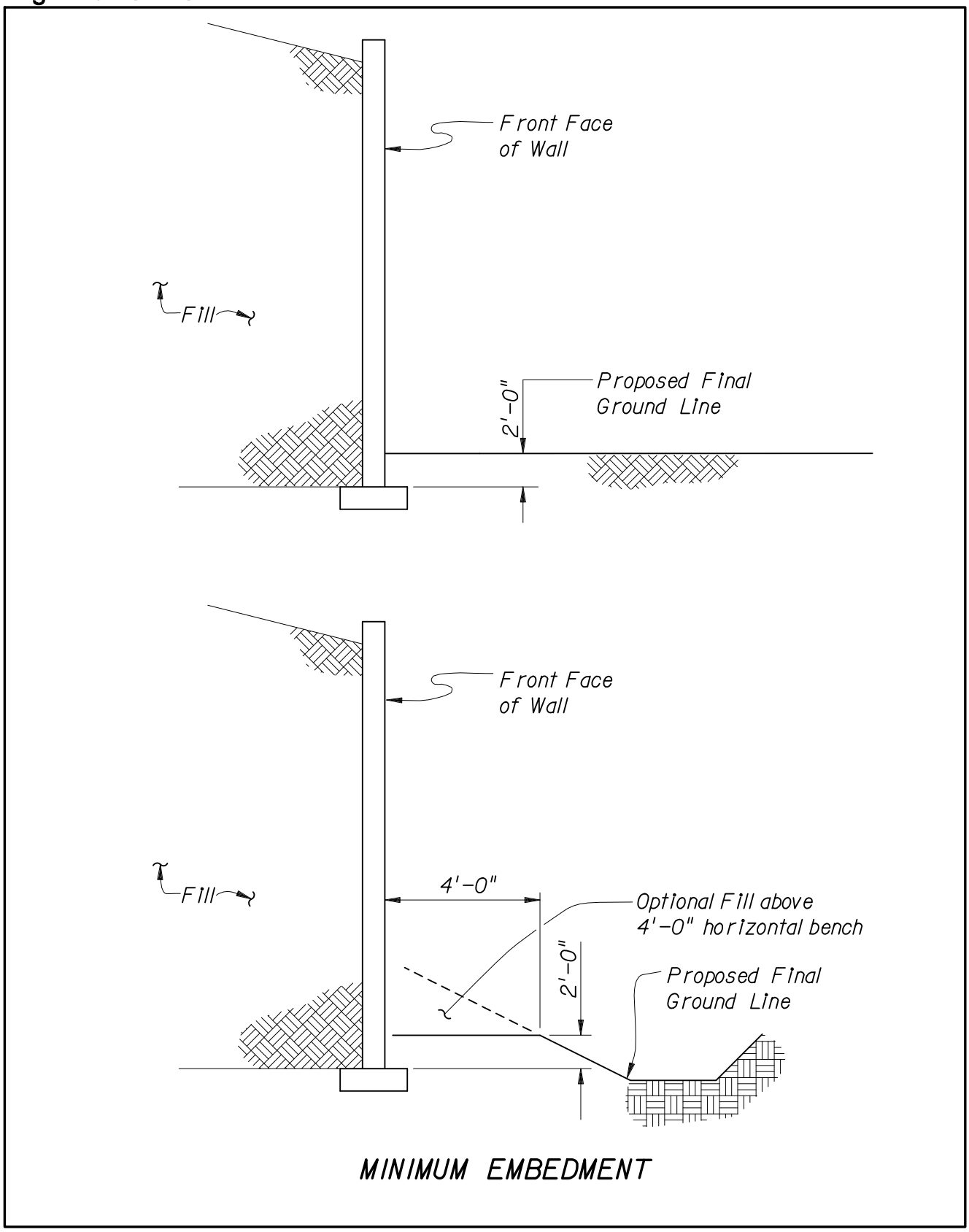
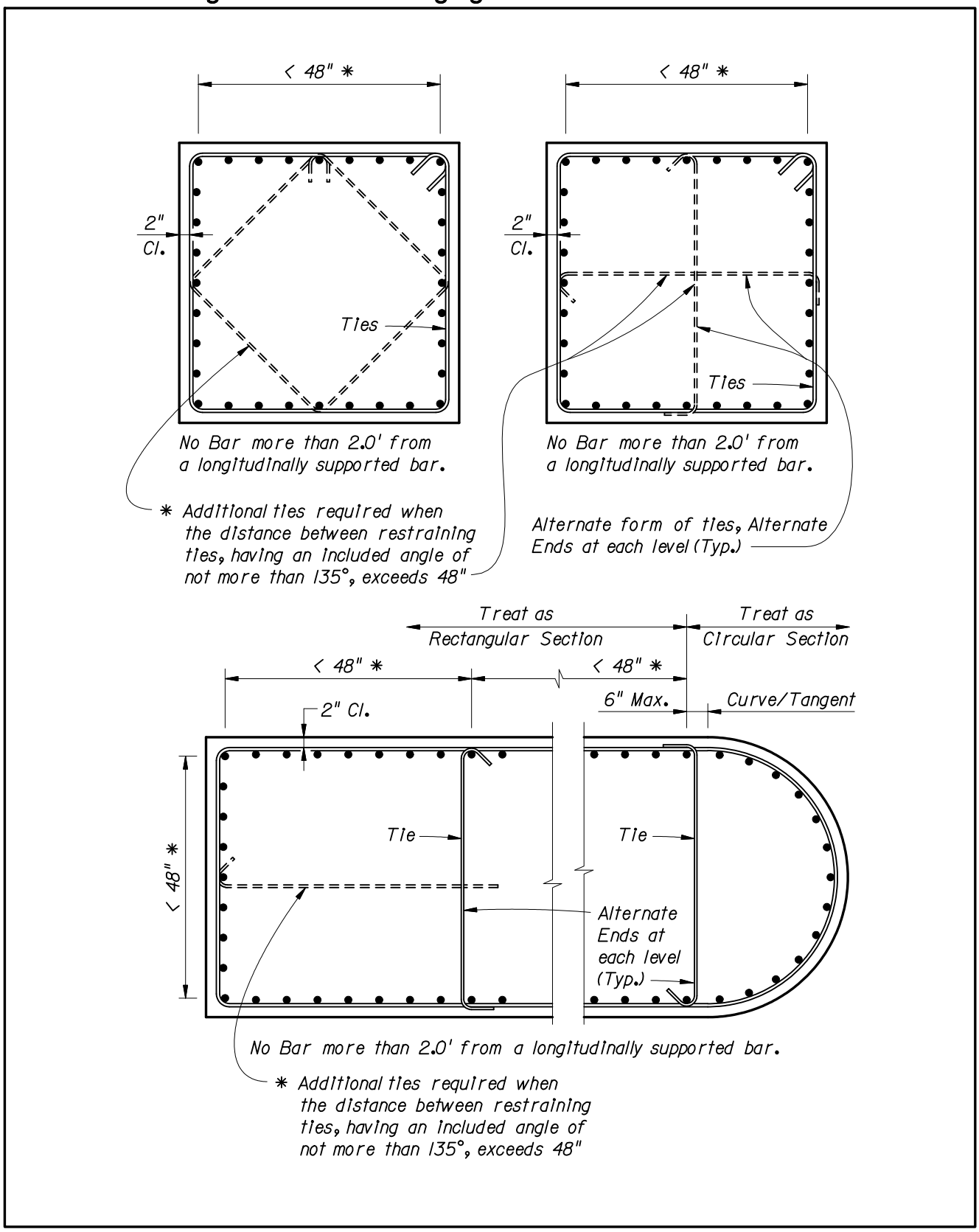
Figure 3-20, Auxiliary Ties in Compression Members Not Designed for Plastic Hinging