## Figure 3-17 Broken Back Backfill without Traffic Surcharge

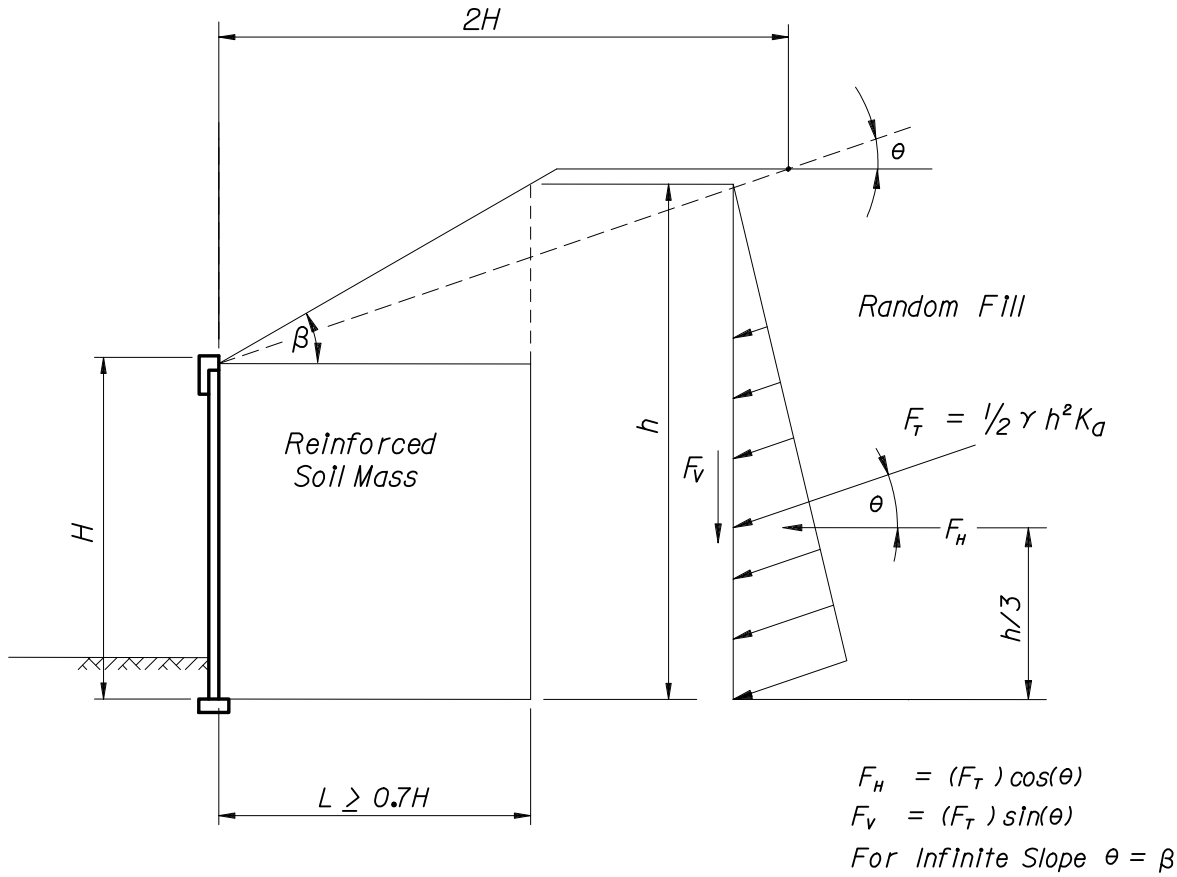


$K_a$ For Random Fill: $K_a = \cos(\theta)\left[\dfrac{\cos(\theta) - \sqrt{\cos^2(\theta) - \cos^2\phi}}{\cos(\theta) + \sqrt{\cos^2(\theta) - \cos^2\phi}}\right]$

$\phi$ = Friction Angle of Back fill or Foundation, whichever is lowest.

Loads shown are unfactored. Use appropriate load and resistance factors in analysis. (See Volume 7 – Design Aids, for the LRFD External Stability Analysis for MSE Walls program).

BROKEN BACK BACKFILL CASE WITHOUT TRAFFIC SURCHARGE