INSTRUCTIONS TO STRUCTURES AND ROADWAY ENGINEERS:

These instructions are applicable only to bridges utilizing concrete flat slab type superstructures. They are intended for informational use only and are not to be included in the plan set. These instructions shall be used in conjunction with the requirements of the "Plans Preparation Manual", "Structures Design Guidelines" and Design Standards Index Nos. 400 & 402.

These instructions address the retrofitting of existing "W" Beam Guardrail transitions that are attached to existing "F" or "New Jersey" shape bridge Traffic Railings. Guidance and instructions to the Structures and Roadway Engineers are provided herein for evaluating existing railing and guardrail transition installations and subsequently preparing the plans necessary to accomplish the guardrail transition retrofit. A coordinated effort between the Structures and Roadway Engineers is required to properly complete the evaluation and plans preparation tasks.

The retrofitting of existing "W" beam guardrail transitions is accomplished by installing new Thrie Beam Guardrail transitions in accordance with Scheme A or Scheme B as presented herein. The Structures Engineer shall select which of these two given schemes is appropriate for a particular location. Once this selection has been made, the Structures and or Roadway Engineer(s) shall then prepare the required plans in accordance with the details and instructions provided.

It is permissible to use both Scheme A and Scheme B on a single bridge as required; e.g. Scheme A at begin bridge and Scheme B at end bridge. Scheme A shall be considered as the preferred choice for retrofitting the existing guardrail transitions. Scheme B should only be used where Scheme A is not applicable. Use of either scheme is dependent on the existing Traffic Railing and End Transition being in sound structural condition, for the portions that will remain in place.

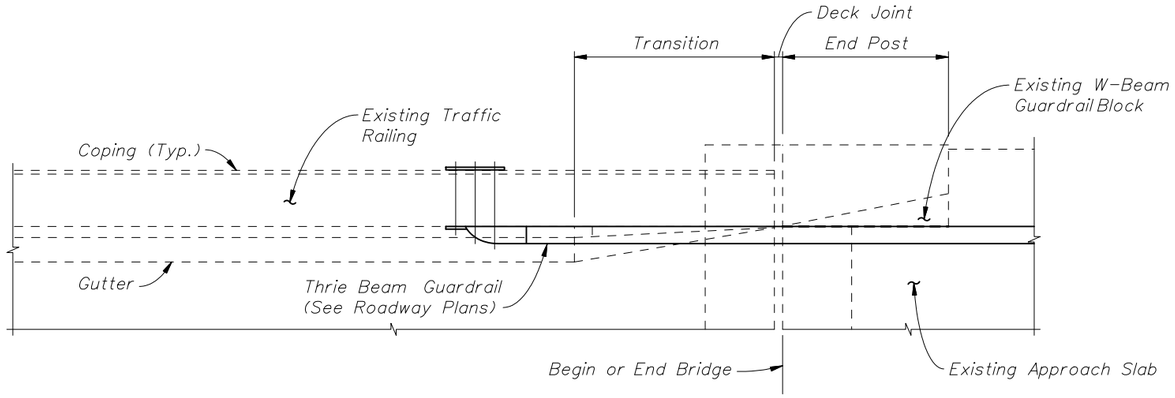

PARTIAL ELEVATION VIEW
(Existing W-Beam Guardrail to be removed not shown for clarity.
"F" Shape Railing shown, "New Jersey" Shape Railing similar)

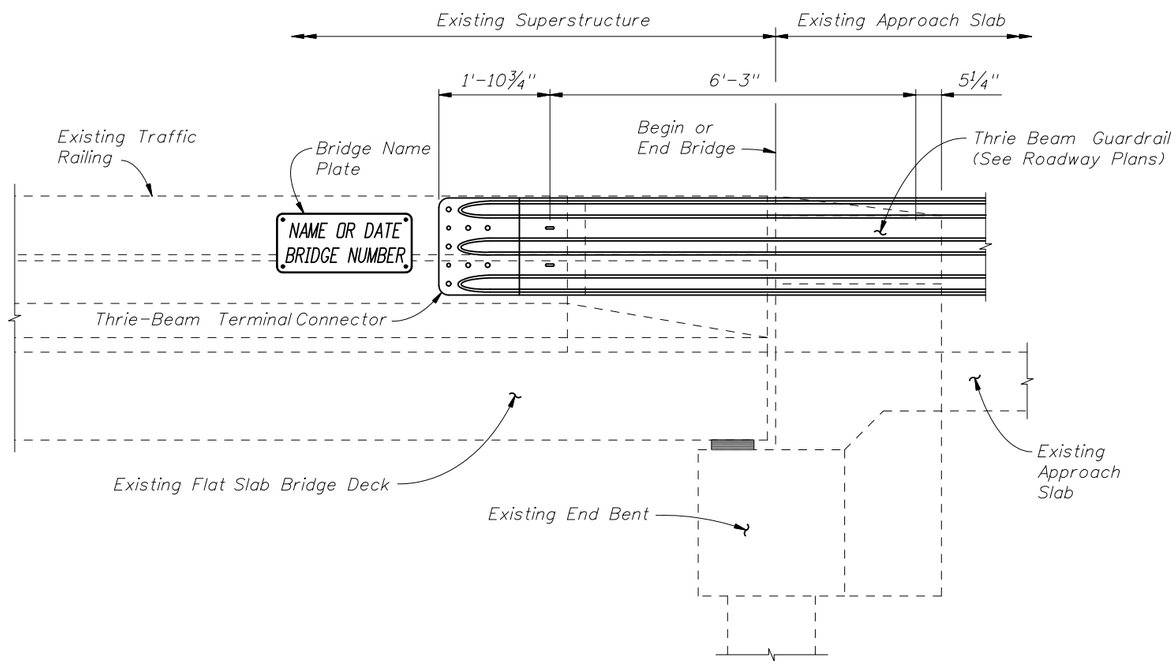

PARTIAL ELEVATION VIEW
(Existing W-Beam Guardrail to be removed not shown for clarity.
"F" Shape Railing shown, "New Jersey" Shape Railing similar)

SCHEME A INSTRUCTIONAL NOTES:

The Thrie Beam Guardrail transition retrofit details shown in Scheme A are applicable for existing bridges meeting both of the following requirements:

1. The existing bridge Traffic Railings are "F" or "New Jersey" shape railings conforming to one of the superseded FDOT standard designs shown on "Existing FDOT Traffic Railing Details".

2. The total amount of thermal movement at the bridge end expansion joint does not exceed 1½" (¾" in each direction). The total amount of thermal movement at the expansion joint shall be determined by theoretical calculation and confirmed by field measurement where possible. It should be noted that the actual in-service movement due to thermal effects may be less than the value determined by theoretical calculation.

If both of the above requirements cannot be met, then Scheme B shall be evaluated for use. If both of the above requirements are met, the details shown on this sheet and the following guidelines shall be used to assist in the preparation of the plans.

Generally, if Scheme A is determined by the Structures Engineer to be applicable, then Structures Plans will not be required for the Thrie Beam Guardrail transition retrofit. Design Standards Index No. 402, Sheet No. 24 of 24, Scheme I shall be used for the Thrie Beam Guardrail transition retrofit. The necessary details, notes and references to applicable standards shall be prepared by the Roadway Engineer and included in the Roadway Plans. The retrofit details included in the Roadway Plans should be reviewed by the Structures Engineer to ensure compliance and conformity with these instructions.

The new Thrie Beam Guardrail transition is bolted to the existing Traffic Railing through field drilled holes utilizing the pre-drilled Thrie Beam Terminal Connector as a template. This method of attachment creates the potential for conflicts between the new attachment bolts and existing utilities and/or conduits. The locations of the new attachment bolts shall be compared with the positions of any existing utilities and/or conduits. Design Standards Index No. 402 provides guidance in selecting a bolt pattern for the Thrie Beam Terminal Connector that may avoid existing utilities and/or conduits.

Utilities and/or conduits may exist in or adjacent to the existing Traffic Railings and will vary in size, number and location. The presence, size, number and locations of existing utilities and/or conduits shall be determined by a review of existing plans and confirmed by field verification. It should be noted that utility and/or conduit installations may vary by location on a single bridge. Thus, a field verification shall be conducted at each individual Thrie Beam Terminal Connector location. Existing utilities and/or conduits that conflict with the bolt pattern selected for the Thrie Beam Terminal Connector shall be relocated if possible or placed out of service. The Roadway Plans shall contain all necessary utility adjustment information. The required field verification work shall be completed as early in the evaluation phase as possible.

The Roadway Plans shall include the following notes:

A Bridge Name Plate shall be furnished and attached to the Traffic Railing, approximately 3" from the top, near the end of the Thrie Beam Guardrail Terminal Connector. The Bridge Name Plate shall include the information on the existing Traffic Railing that has been obscured by the new Thrie Beam Guardrail, e.g. Bridge Number, Bridge Name or Date. The Bridge Name Plate shall be approximately 1/16" thick aluminum plate conforming to Aluminum Association Alloy 6061-T6 or 5154-H38. The Bridge Name Plate shall be mechanically anchored to the railing with a minimum of four concrete expansion anchors or concrete screws, ¼" diameter by 1" long, as approved by the Engineer. The Bridge Name Plate shall be white, with 3" tall black letters and sized appropriately to contain the information required. Fabrication and installation of the Bridge Name Plate shall be considered as incidental work for payment purposes.

Reinforcing steel that is exposed during drilling/coring of the Terminal Connector bolt holes shall be painted with a zinc rich galvanizing compound in accordance with Section 562 of the Specifications.

SCHEME A

THIS SHEET IS TO BE USED FOR EXISTING FLAT SLAB BRIDGES MEETING SCHEME A REQUIREMENTS.

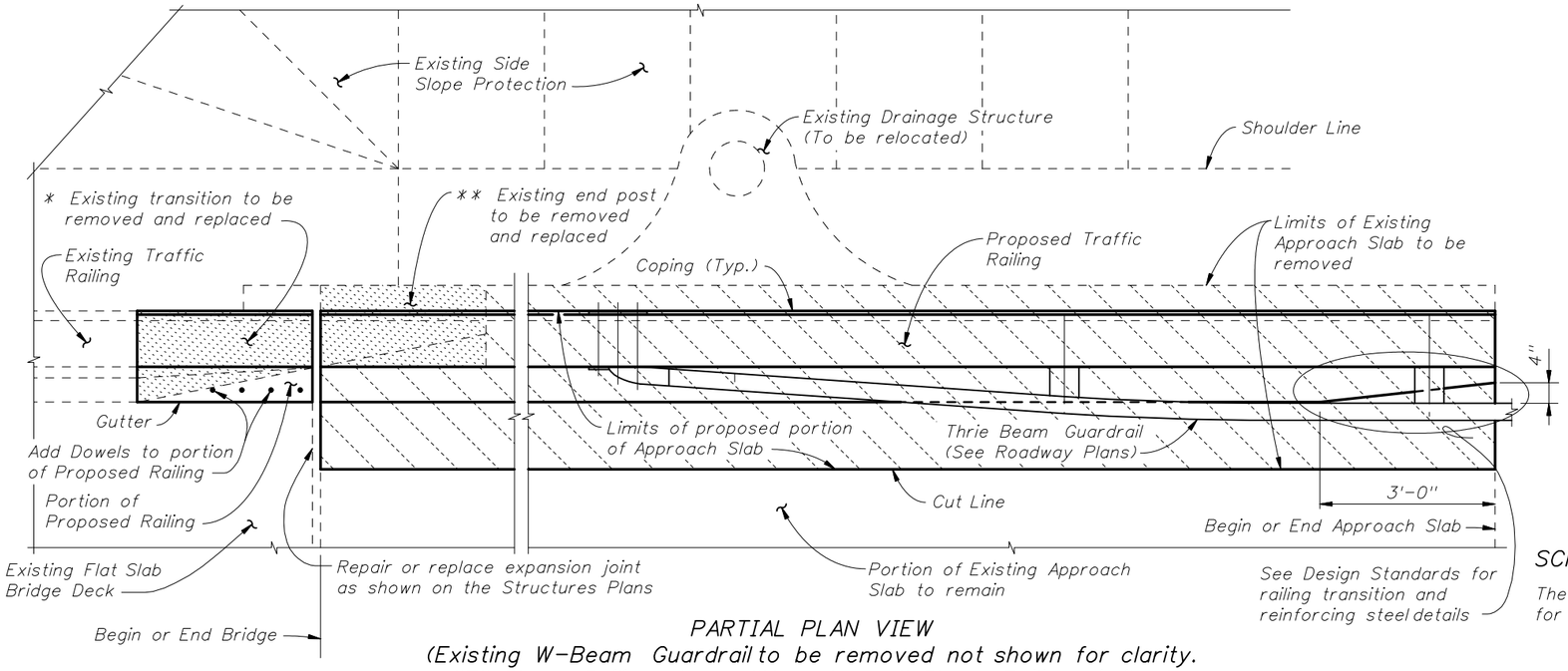

PARTIAL PLAN VIEW
(Existing W-Beam Guardrail to be removed not shown for clarity.
"F" Shape Railing shown, "New Jersey" Shape Railing similar.)

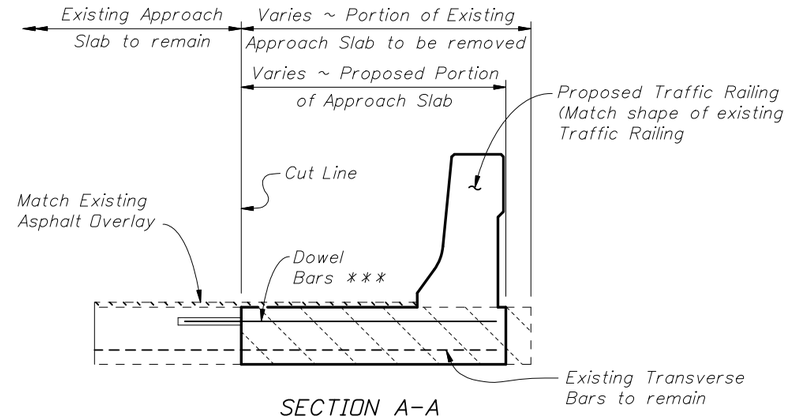

SECTION A-A
(Showing one layer of existing reinforcement)

*** Add Dowel Bars on approach slabs when an analysis determines they are necessary. See Structures Plans for reinforcing steel detail.

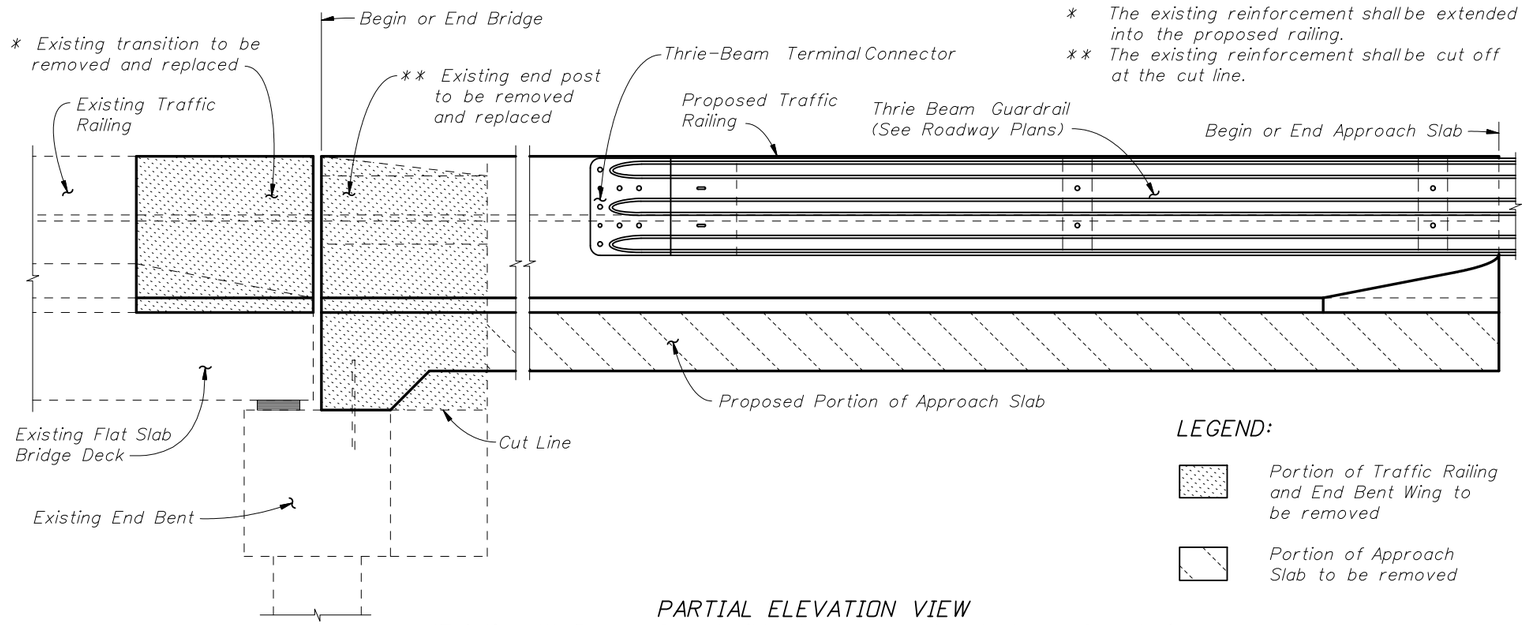

PARTIAL ELEVATION VIEW
(Existing W-Beam Guardrail to be removed not shown for clarity.
"F" Shape Railing shown, "New Jersey" Shape Railing similar.)

* The existing reinforcement shall be extended into the proposed railing.
** The existing reinforcement shall be cut off at the cut line.

LEGEND:

- Portion of Traffic Railing and End Bent Wing to be removed
- Portion of Approach Slab to be removed

SCHEME B

SCHEME B INSTRUCTIONAL NOTES:

The Thrie Beam Guardrail transition retrofit details shown in Scheme B are applicable for existing bridges meeting both of the following requirements:

1. The existing bridge Traffic Railings are "F" or "New Jersey" shape railings conforming to one of the superseded FDOT standard designs shown on "Existing FDOT Traffic Railing Details".

2. The total amount of thermal movement at the bridge end expansion joint exceeds 1½" (¾" in each direction). The total amount of thermal movement at the expansion joint shall be determined by theoretical calculation and confirmed by field measurement where possible. It should be noted that the actual in-service movement due to thermal effects may be less than the value determined by theoretical calculation.

If both of the above requirements are met, then Scheme B shall be used for the retrofit. In this event, the details shown on this sheet and the following guidelines shall be used to assist in the preparation of the plans.

If Scheme B is determined to be applicable by the Structures Engineer, then Structures and Roadway Plans will be required for the Thrie Beam Guardrail retrofit. The Roadway Plans shall address traffic control issues, removal of the existing "W" Beam Guardrail transition and installation of the new Thrie Beam Guardrail transition utilizing Design Standards Index No. 400, Detail J. The Structures Plans shall address demolition and reconstruction of the required portion of the existing Traffic Railing end transition and approach slab. The necessary structural details and notes shall be prepared by the Structures Engineer and included in the Structures Plans. The appropriate Design Standards Index Nos. 420, 421 and 490, shall be referenced and used in their entirety or modified as required by project specific designs included in the Structures Plans. Applicable details from Design Standards Index Nos. 20900 or 20910 shall be used as required for the approach slab reconstruction.

Utilities and/or conduits may exist in or adjacent to the existing Traffic Railings and will vary in size, number and location. The presence, size, number and locations of existing utilities and/or conduits shall be determined by a review of existing plans and confirmed by field verification. It should be noted that utility and/or conduit installations may vary by location on a single bridge. Thus, a field verification shall be conducted at each individual Thrie Beam Terminal Connector location. Conflicting existing utilities and/or conduits should be relocated if possible, repositioned within the portion of the Traffic Railing that is being reconstructed or placed out of service. The Roadway Plans should contain all necessary utility adjustment information. The required field verification work shall be completed as early in the evaluation phase as possible.

THIS SHEET IS TO BE USED FOR EXISTING FLAT SLAB BRIDGES MEETING SCHEME B REQUIREMENTS.

THRIE BEAM GUARDRAIL TRANSITION RETROFIT INSTRUCTIONS FOR EXISTING FLAT SLAB BRIDGES	SHEET NO. 3 of 3

INSTRUCTIONS TO STRUCTURES AND ROADWAY ENGINEERS:

These instructions are applicable only to bridges utilizing beam or girder type superstructures. They are intended for informational use only and are not to be included in the plan set. These instructions shall be used in conjunction with the requirements of the "Plans Preparation Manual", "Structures Design Guidelines" and Design Standards Index Nos. 400 & 402.

These instructions address the retrofitting of existing "W" Beam Guardrail transitions that are attached to existing "F" or "New Jersey" shape bridge Traffic Railings. Guidance and instructions to the Structures and Roadway Engineers are provided herein for evaluating existing railing and guardrail transition installations and subsequently preparing the plans necessary to accomplish the guardrail transition retrofit. A coordinated effort between the Structures and Roadway Engineers is required to properly complete the evaluation and plans preparation tasks.

The retrofitting of existing "W" beam guardrail transitions is accomplished by installing new Thrie Beam Guardrail transitions in accordance with Schemes A, B or C as presented herein. The Structures Engineer shall select which of these three given schemes is appropriate for a particular location. Once this selection has been made, the Structures and or Roadway Engineer(s) shall then prepare the required plans in accordance with the details and instructions provided.

It is permissible to use any combination of Schemes A, B and C on a single bridge as required; e.g. Scheme A at begin bridge and Scheme C at end bridge. Schemes A and B shall be considered as the preferred choices for retrofitting the existing guardrail transitions. Scheme C should only be used where Schemes A or B are not applicable. Use of any schemes is dependent on the existing Traffic Railing and End Transition being in sound structural condition, for the portions that will remain in place.

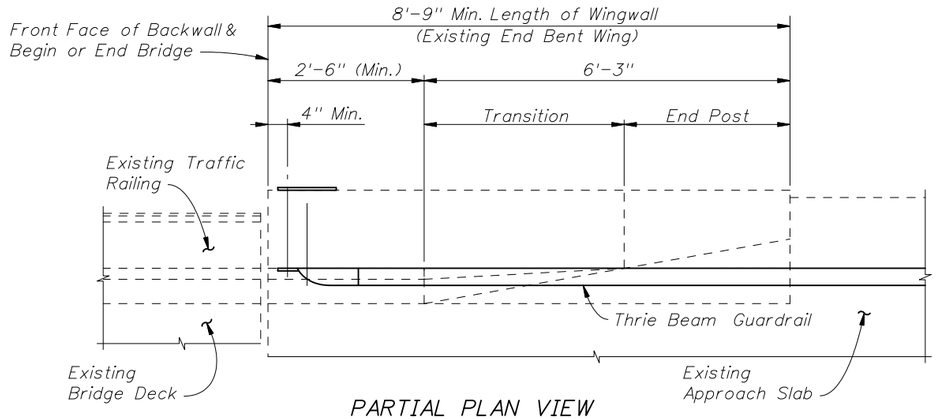

PARTIAL PLAN VIEW
(Existing W-Beam Guardrail to be removed not shown for clarity.
"F" Shape Railing shown, "New Jersey" Shape Railing similar)

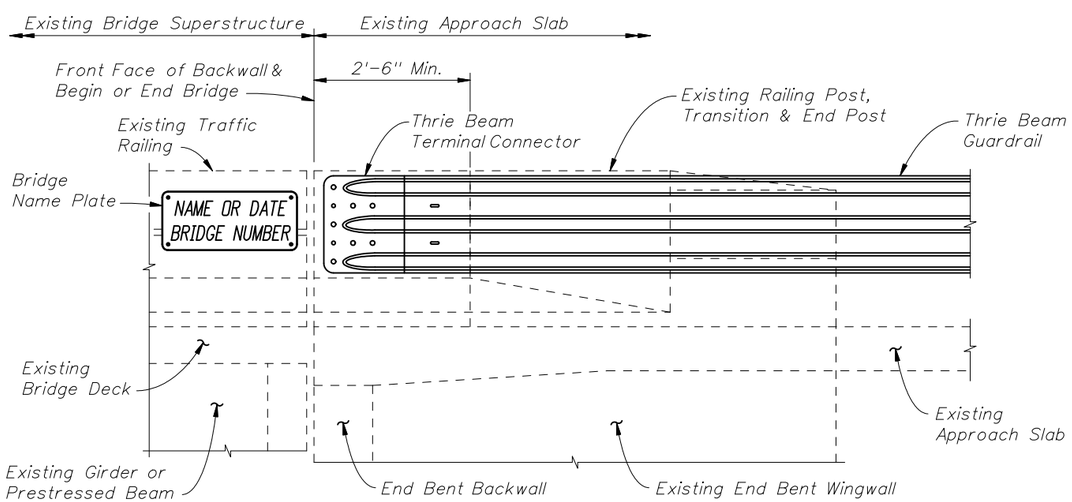

PARTIAL ELEVATION VIEW
(Existing W-Beam Guardrail to be removed not shown for clarity.
"F" Shape Railing shown, "New Jersey" Shape Railing similar)

SCHEME A INSTRUCTIONAL NOTES:

The Thrie Beam Guardrail transition retrofit details shown in Scheme A are applicable for existing bridges meeting both of the following requirements:

1. The existing bridge Traffic Railings are "F" or "New Jersey" shape railings conforming to one of the superseded FDOT standard designs shown on "Existing FDOT Traffic Railing Details".

2. The existing end bent wingwalls that support the Traffic Railing end transitions are a minimum of 8'-9" in length and are directly supported by a pile or drilled shaft.

If both of the above requirements cannot be met, then Scheme B shall be evaluated for use. If both of the above requirements are met, the details shown on this sheet and the following guidelines shall be used to assist in the preparation of the plans.

Generally, if Scheme A is determined by the Structures Engineer to be applicable, then Structures Plans will not be required for the Thrie Beam Guardrail retrofit. Design Standards Index No. 402, Sheet No. 24 of 24, Scheme II shall be used for the Thrie Beam Guardrail retrofit. The necessary details, notes and references to applicable standards shall be prepared by the Roadway Engineer and included in the Roadway Plans. The retrofit details included in the Roadway Plans should be reviewed by the Structures Engineer to ensure compliance and conformity with these instructions.

The new Thrie Beam Guardrail transition is bolted to the existing Traffic Railing through field drilled holes utilizing the pre-drilled Thrie Beam Terminal Connector as a template. This method of attachment creates the potential for conflicts between the new attachment bolts and existing utilities and/or conduits. The locations of the new attachment bolts shall be compared with the positions of any existing utilities and/or conduits. Design Standards Index No. 402 provides guidance in selecting a bolt pattern for the Thrie Beam Terminal Connector that may avoid existing utilities and/or conduits.

Utilities and/or conduits may exist in or adjacent to the existing Traffic Railings and will vary in size, number and location. The presence, size, number and locations of existing utilities and/or conduits shall be determined by a review of existing plans and confirmed by field verification. It should be noted that utility and/or conduit installations may vary by location on a single bridge. Thus, a field verification shall be conducted at each individual Thrie Beam Terminal Connector location. Existing utilities and/or conduits that conflict with the bolt pattern selected for the Thrie Beam Terminal Connector shall be relocated if possible or placed out of service. The Roadway Plans shall contain all necessary utility adjustment information. The required field verification work shall be completed as early in the evaluation phase as possible.

The Roadway Plans shall include the following notes:

A Bridge Name Plate shall be furnished and attached to the Traffic Railing, approximately 3" from the top, near the end of the Thrie Beam Guardrail Terminal Connector. The Bridge Name Plate shall include the information on the existing Traffic Railing that has been obscured by the new Thrie Beam Guardrail, e.g. Bridge Number, Bridge Name or Date. The Bridge Name Plate shall be approximately 1/16" thick aluminum plate conforming to Aluminum Association Alloy 6061-T6 or 5154-H38. The Bridge Name Plate shall be mechanically anchored to the railing with a minimum of four concrete expansion anchors or concrete screws, 1/4" diameter by 1" long, as approved by the Engineer. The Bridge Name Plate shall be white, with 3" tall black letters and sized appropriately to contain the information required. Fabrication and installation of the Bridge Name Plate shall be considered as incidental work for payment purposes.

Reinforcing steel that is exposed during drilling/coring of the Terminal Connector bolt holes shall be painted with a zinc rich galvanizing compound in accordance with Section 562 of the Specifications.

SCHEME A

THIS SHEET IS TO BE USED FOR EXISTING PRESTRESSED BEAM OR GIRDER BRIDGES MEETING SCHEME A REQUIREMENTS.

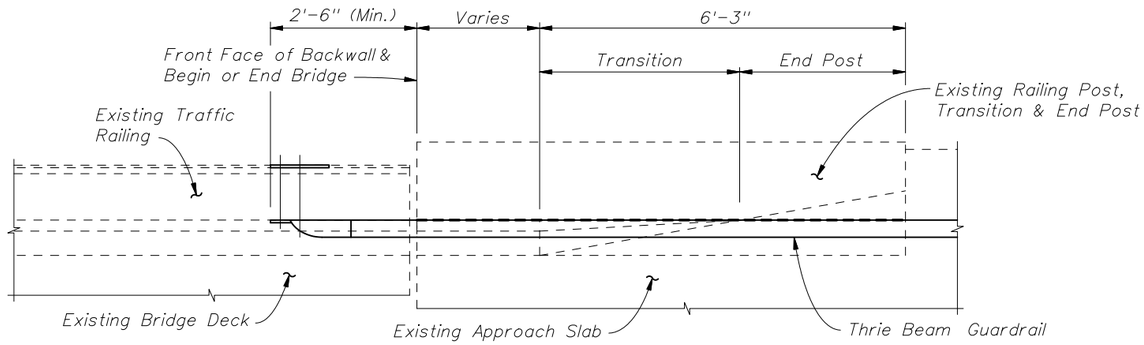

PARTIAL PLAN VIEW
(Existing W-Beam Guardrail to be removed not shown for clarity.
"F" Shape Railing shown, "New Jersey" Shape Railing similar)

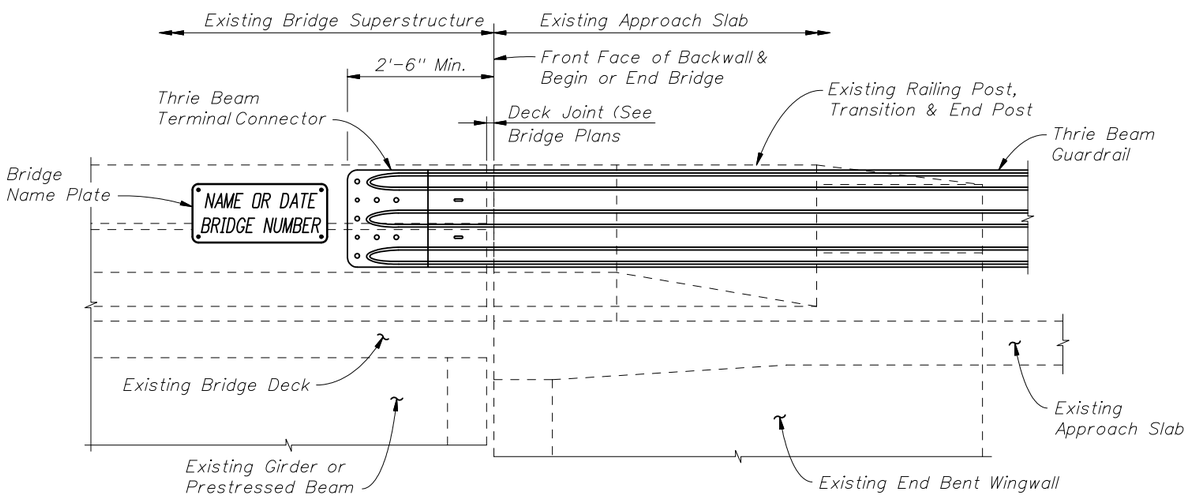

PARTIAL ELEVATION VIEW
(Existing W-Beam Guardrail to be removed not shown for clarity.
"F" Shape Railing shown, "New Jersey" Shape Railing similar)

SCHEME B

SCHEME B INSTRUCTIONAL NOTES:

The Thrie Beam Guardrail transition retrofit details shown in Scheme B are applicable for existing bridges meeting both of the following requirements:

1. The existing bridge Traffic Railings are "F" or "New Jersey" shape railings conforming to one of the superseded FDOT standard designs shown on "Existing FDOT Traffic Railing Details".

2. The total amount of thermal movement at the bridge end expansion joint does not exceed 1½" (¾" in each direction). The total amount of thermal movement at the expansion joint shall be determined by theoretical calculation and confirmed by field measurement where possible. It should be noted that the actual in-service movement due to thermal effects may be less than the value determined by theoretical calculation.

If both of the above requirements cannot be met then Scheme C shall be evaluated for use. If both of the above requirements are met, the details shown on this sheet and the following guidelines shall be used to assist in the preparation of the plans.

Generally, if Scheme B is determined by the Structures Engineer to be applicable, then Structures Plans will not be required for the Thrie Beam Guardrail retrofit. Design Standards Index No. 402, Sheet No. 24 of 24, Scheme III shall be used for the Thrie Beam Guardrail retrofit. The necessary details, notes and references to applicable standards shall be prepared by the Roadway Engineer and included in the Roadway Plans. The retrofit details included in the Roadway Plans should be reviewed by the Structures Engineer to ensure compliance and conformity with these instructions.

The new Thrie Beam Guardrail transition is bolted to the existing Traffic Railing through field drilled holes utilizing the pre-drilled Thrie Beam Terminal Connector as a template. This method of attachment creates the potential for conflicts between the new attachment bolts and existing utilities and/or conduits. The locations of the new attachment bolts shall be compared with the positions of any existing utilities and/or conduits. Design Standards Index No. 402 provides guidance in selecting a bolt pattern for the Thrie Beam Terminal Connector that may avoid existing utilities and/or conduits.

Utilities and/or conduits may exist in or adjacent to the existing Traffic Railings and will vary in size, number and location. The presence, size, number and locations of existing utilities and/or conduits shall be determined by a review of existing plans and confirmed by field verification. It should be noted that utility and/or conduit installations may vary by location on a single bridge. Thus, a field verification shall be conducted at each individual Thrie Beam Terminal Connector location. Existing utilities and/or conduits that conflict with the bolt pattern selected for the Thrie Beam Terminal Connector shall be relocated if possible or placed out of service. The Roadway Plans shall contain all necessary utility adjustment information. The required field verification work shall be completed as early in the evaluation phase as possible.

The Roadway Plans shall include the following notes:

A Bridge Name Plate shall be furnished and attached to the Traffic Railing, approximately 3" from the top, near the end of the Thrie Beam Guardrail Terminal Connector. The Bridge Name Plate shall include the information on the existing Traffic Railing that has been obscured by the new Thrie Beam Guardrail, e.g. Bridge Number, Bridge Name or Date. The Bridge Name Plate shall be approximately 1/16" thick aluminum plate conforming to Aluminum Association Alloy 6061-T6 or 5154-H38. The Bridge Name Plate shall be mechanically anchored to the railing with a minimum of four concrete expansion anchors or concrete screws, ¼" diameter by 1" long, as approved by the Engineer. The Bridge Name Plate shall be white, with 3" tall black letters and sized appropriately to contain the information required. Fabrication and installation of the Bridge Name Plate shall be considered as incidental work for payment purposes.

Reinforcing steel that is exposed during drilling/coring of the Terminal Connector bolt holes shall be painted with a zinc rich galvanizing compound in accordance with Section 562 of the Specifications.

THIS SHEET IS TO BE USED FOR EXISTING PRESTRESSED BEAM OR GIRDER BRIDGES MEETING SCHEME B REQUIREMENTS.

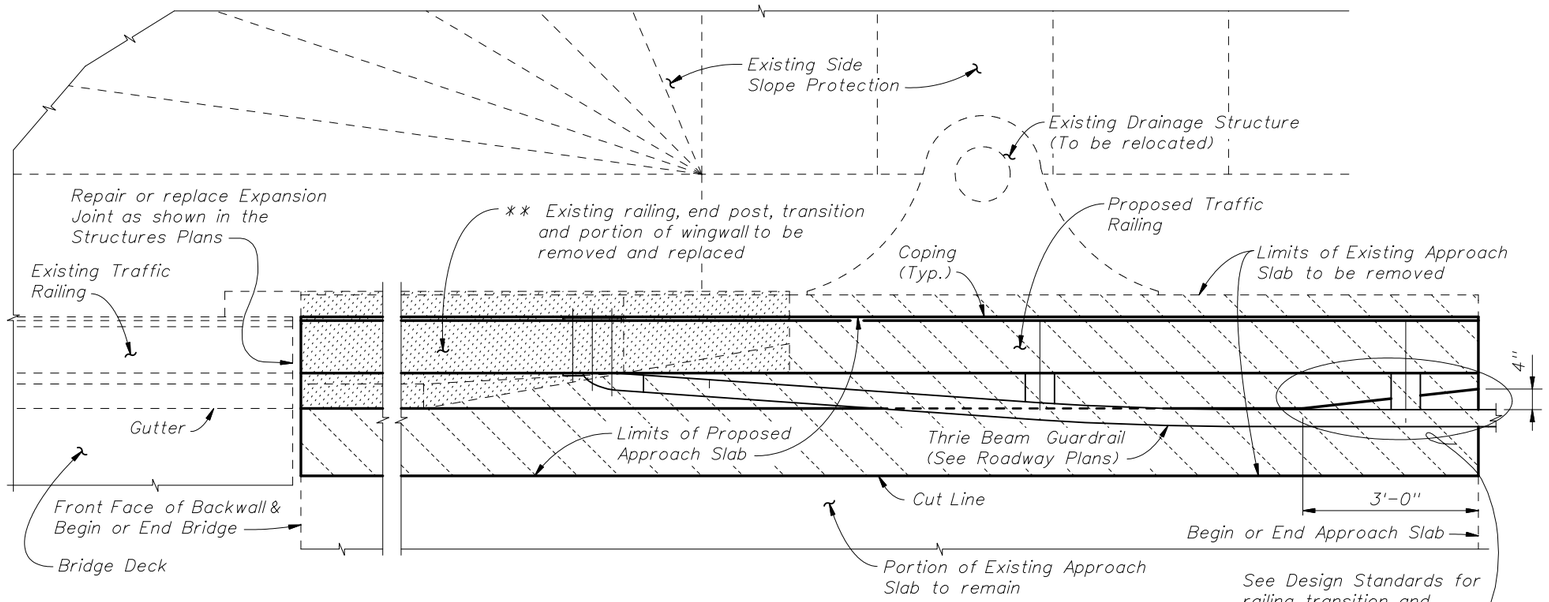

PARTIAL PLAN VIEW
(Existing W-Beam Guardrail to be removed not shown for clarity.
"F" Shape Railing shown, "New Jersey" Shape Railing similar.)

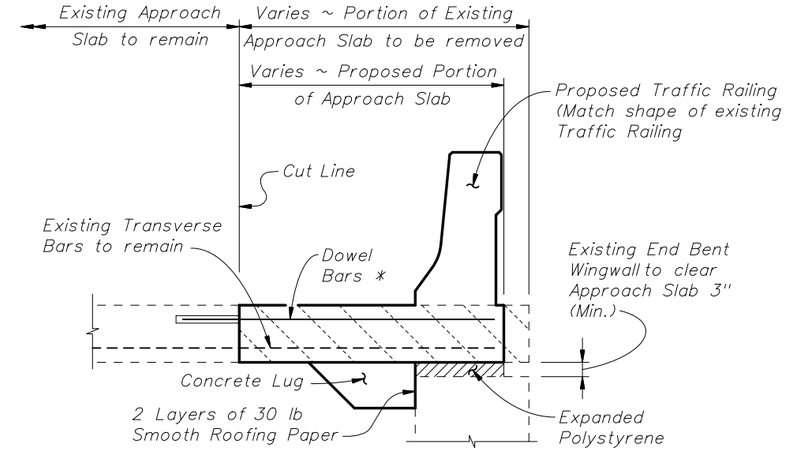

SECTION A-A
(Showing one layer of existing reinforcement)

* Add Dowel Bars on approach slabs when an analysis determines they are necessary. See Structures Plans for reinforcing steel detail.

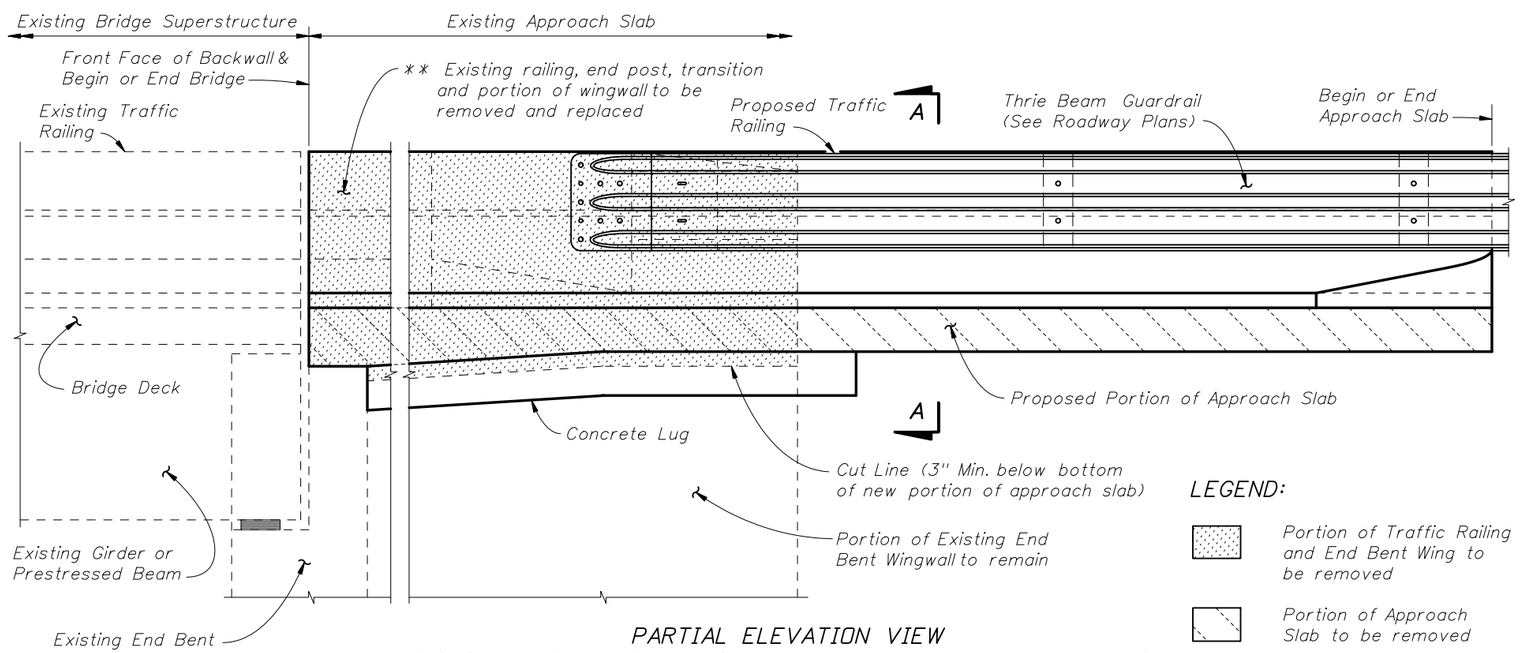

PARTIAL ELEVATION VIEW
(Existing W-Beam Guardrail to be removed not shown for clarity.
"F" Shape Railing shown, "New Jersey" Shape Railing similar.)

LEGEND:

- Portion of Traffic Railing and End Bent Wing to be removed
- Portion of Approach Slab to be removed

SCHEME C INSTRUCTIONAL NOTES:

The Thrie Beam Guardrail transition retrofit details shown in Scheme C are applicable for existing bridges meeting both of the following requirements:

1. The existing bridge Traffic Railings are "F" or "New Jersey" shape railings conforming to one of the superseded FDOT standard designs shown on "Existing FDOT Traffic Railing Details".

2. The total amount of thermal movement at the bridge end expansion joint exceeds 1½" (¾" in each direction). The total amount of thermal movement at the expansion joint shall be determined by theoretical calculation and confirmed by field measurement where possible. It should be noted that the actual in-service movement due to thermal effects may be less than the value determined by theoretical calculation.

If both of the above requirements are met then Scheme C shall be used for the retrofit. In this event, the details shown on this sheet and the following guidelines shall be used to assist in the preparation of the plans.

If Scheme C is determined by the Structures Engineer to be applicable, then Structures and Roadway Plans will be required for the Thrie Beam Guardrail retrofit. The Roadway Plans shall address traffic control issues, removal of the existing "W" Beam Guardrail transition and installation of the new Thrie Beam Guardrail transition utilizing Design Standards Index No. 400, Detail J. The Structures Plans shall address demolition and reconstruction of the required portion of the existing Traffic Railing end transition and approach slab. The necessary structural details, notes and references to applicable standards shall be prepared by the Structures Engineer and included in the Structures Plans. The appropriate Design Standards Index Nos. 420, 421 and 490 shall be used in their entirety or modified as required by project specific designs included in the Structures Plans. Applicable details from Design Standards Index Nos. 20900 or 20910 shall be used as required for the approach slab reconstruction.

Utilities and/or conduits may exist in or adjacent to the existing Traffic Railings and will vary in size, number and location. The presence, size, number and locations of existing utilities and/or conduits shall be determined by a review of existing plans and confirmed by field verification. It should be noted that utility and/or conduit installations may vary by location on a single bridge. Thus, a field verification shall be conducted at each individual planned Thrie Beam Guardrail attachment location. The field verification work shall be completed as early in the evaluation phase as possible.

SCHEME C

THIS SHEET IS TO BE USED FOR EXISTING PRESTRESSED BEAM OR GIRDER BRIDGES MEETING SCHEME C REQUIREMENTS.

INSTRUCTIONS TO STRUCTURES AND ROADWAY ENGINEERS:

This is a historical compilation of superseded Florida Department of Transportation "Structures Standard Drawings" for "F" and "New Jersey" shape bridge mounted Traffic Railings. It is intended for informational use only and is not to be included in the plan set. Use of these sheets shall be in conjunction with the requirements of the "Plans Preparation Manual", "Structures Design Guidelines" and Design Standards Index Nos. 400 & 402.

The following is a list of superseded Traffic Railing standards covered by this compilation:

Standard Index No.	Railing Type	Drawing Date	Revision Date(s)
11407	New Jersey	3/74	10/74
11407	New Jersey	3/78	10/77, 1/78, 9/78, 7/80, 3/81 & 8/81
11460	New Jersey	5/74	6/75, 8/75, 10/77, 9/78, 3/80, 7/80, 3/81, 8/81 & 5/82
12670	New Jersey	3/78	1/81 & 8/81
12931	New Jersey	1/79	3/81, 8/81, 10/84 & 11/84
13857	New Jersey	10/83	11/84
14101	New Jersey	1/86	N.A.
14286	F	9/87	10/87, 11/87, 12/87 & 1/88
700 (English Units)	F	2/89	1990, 1992 & 1994
700 (Metric Units)	F	2/89	1994, 1996, 1997 & 1998

Utilities and/or conduits may exist in or adjacent to the existing Traffic Railings and will vary in size, number and location. Utilities and/or conduits are not shown on these sheets.

Welded Wire Reinforcing (WWR) may have been used in place of the conventional reinforcing steel shown herein.

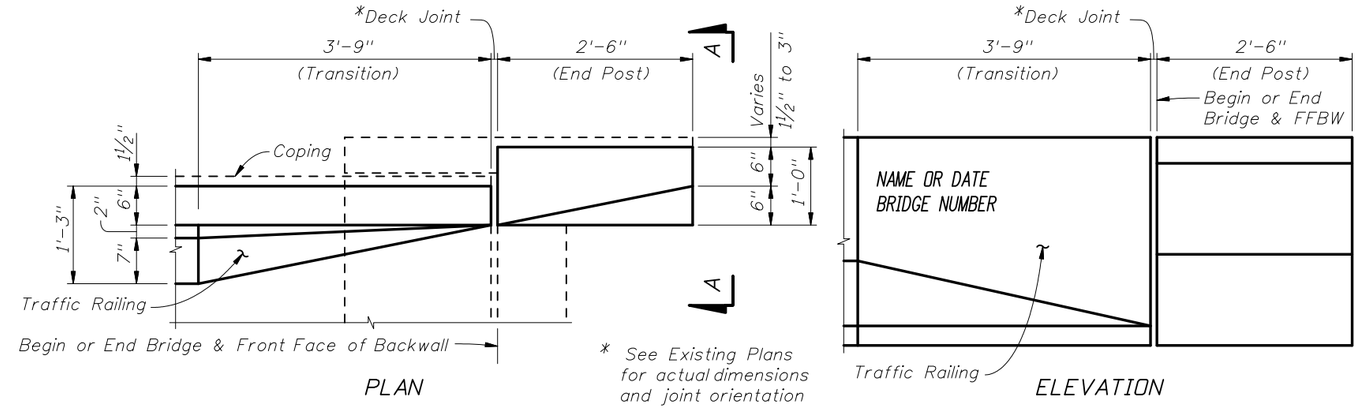

RAILING END TRANSITION FOR NEW JERSEY SHAPES - INDEX NOS. 11407, 11460, 12670, 12931, 13857 & 14101

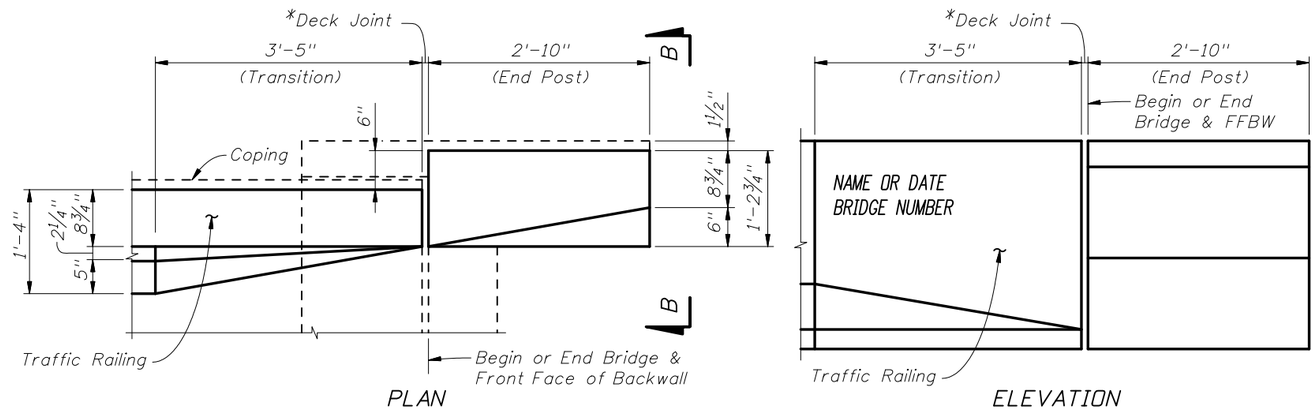

RAILING END TRANSITION FOR F SHAPES - INDEX NO. 14286

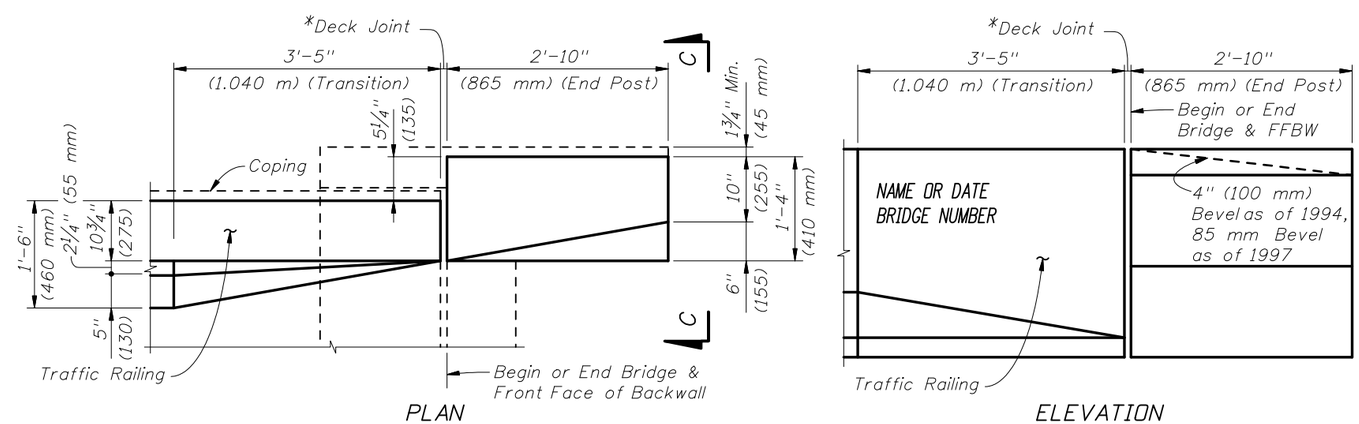

RAILING END TRANSITION FOR F SHAPES - INDEX NO. 700

CROSS REFERENCE: For Views A-A, B-B and C-C see Sheet 2 of 3.

RAILING END TRANSITIONS FOR FLAT SLAB TYPE BRIDGES. FOR BEAM OR GIRDER TYPE BRIDGES SEE SHEET 2 OF 3.

EXISTING FDOT TRAFFIC RAILING DETAILS

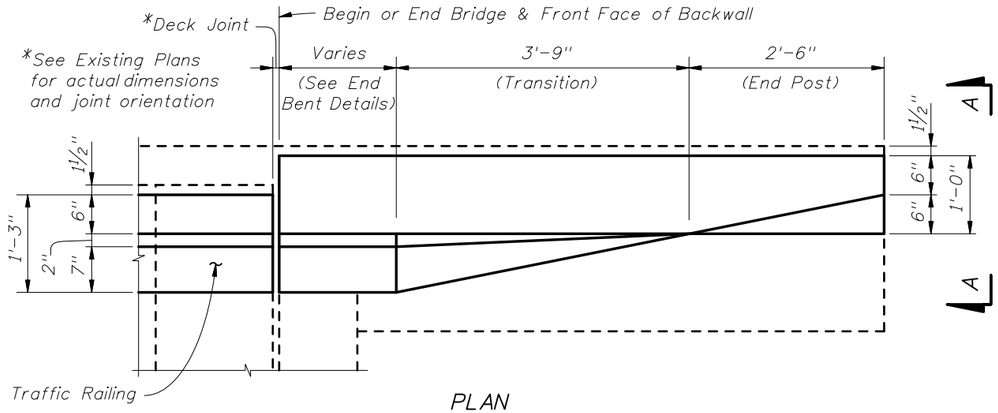

PLAN

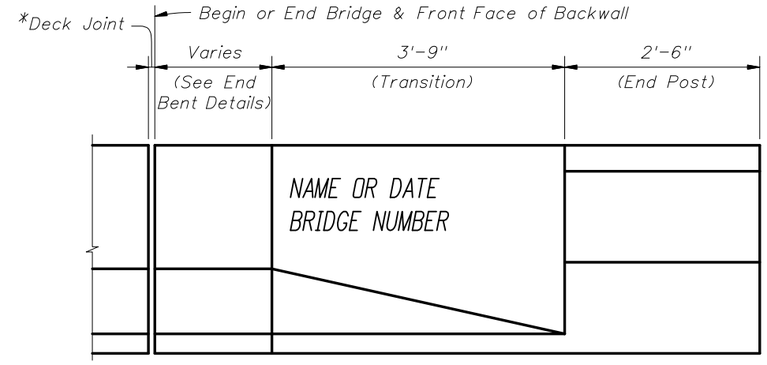

ELEVATION

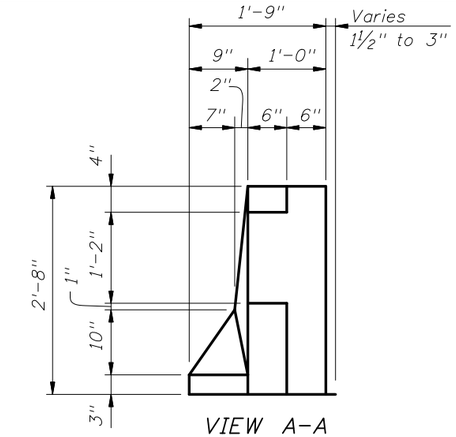

VIEW A-A

RAILING END TRANSITION FOR NEW JERSEY SHAPES - INDEX NOS. 11407, 11460, 12931, 13857 & 14101

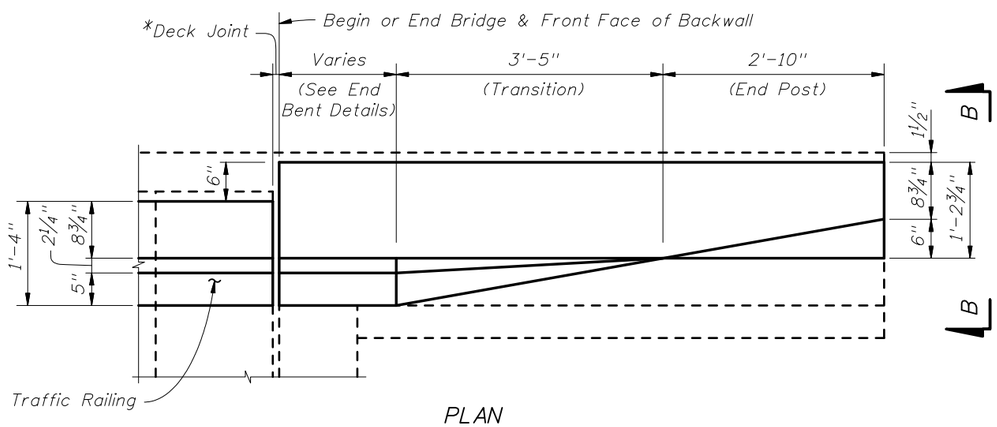

PLAN

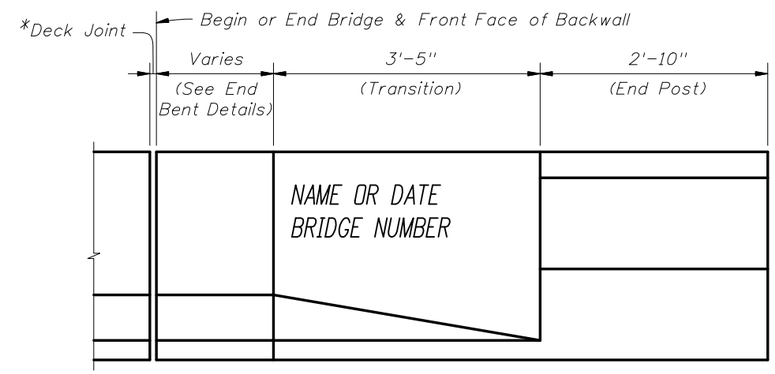

ELEVATION

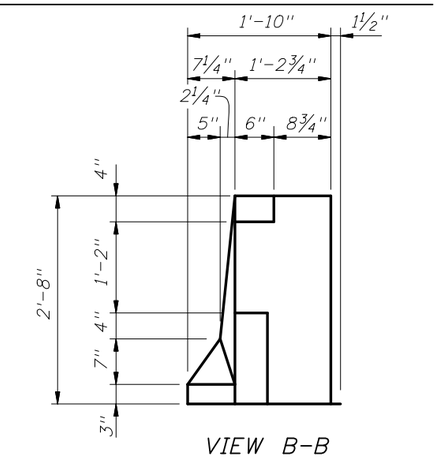

VIEW B-B

RAILING END TRANSITION FOR F SHAPES - INDEX NO. 14286

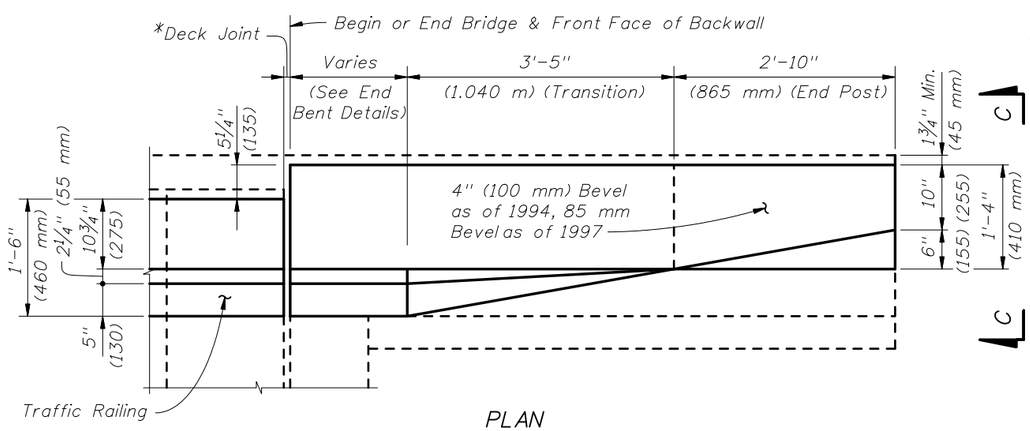

PLAN

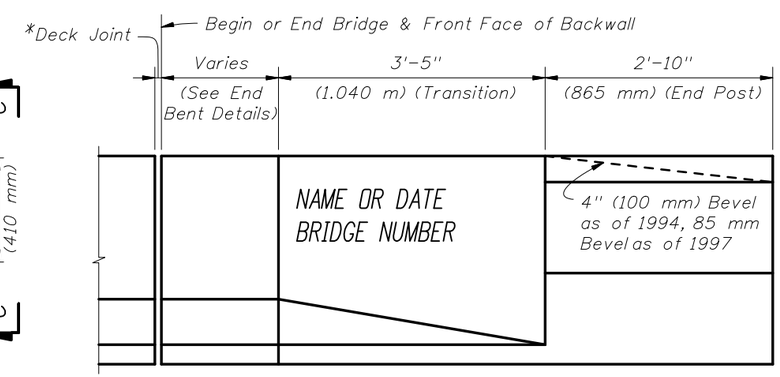

ELEVATION

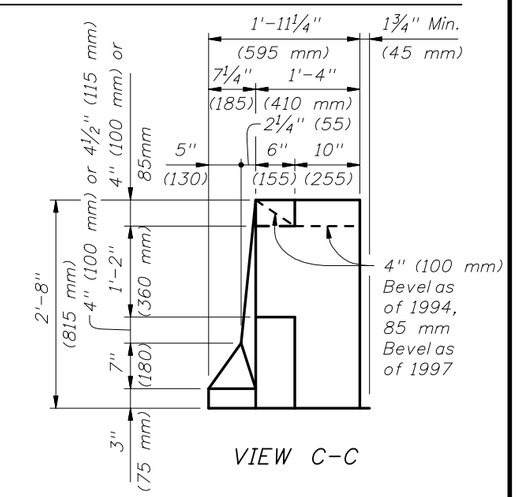

VIEW C-C

RAILING END TRANSITION FOR F SHAPES - INDEX NO. 700

RAILING END TRANSITION FOR BEAM OR GIRDER TYPPE BRIDGES. FOR FLAT SLAB TYPE BRIDGES SEE SHEET 1 OF 3.

EXISTING FDOT TRAFFIC RAILING DETAILS

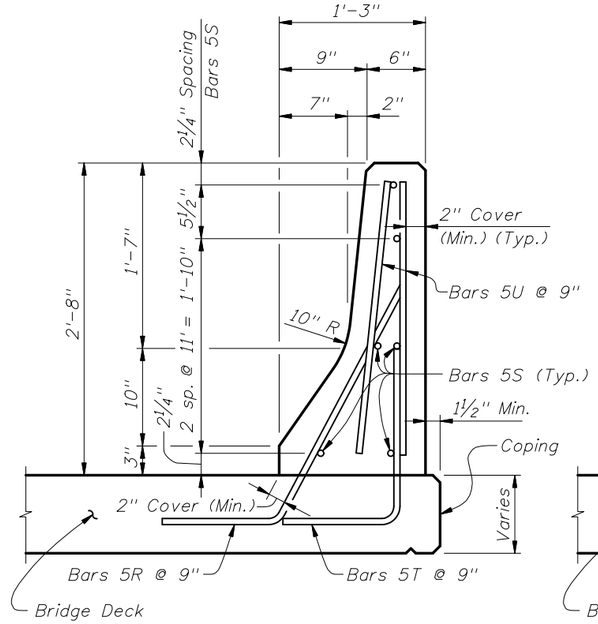

TYPICAL SECTION THRU NEW JERSEY SHAPE RAILING INDEX NOS. 11407 & 11460 (Index No. 11407 shown, Index No. 11460 similar)

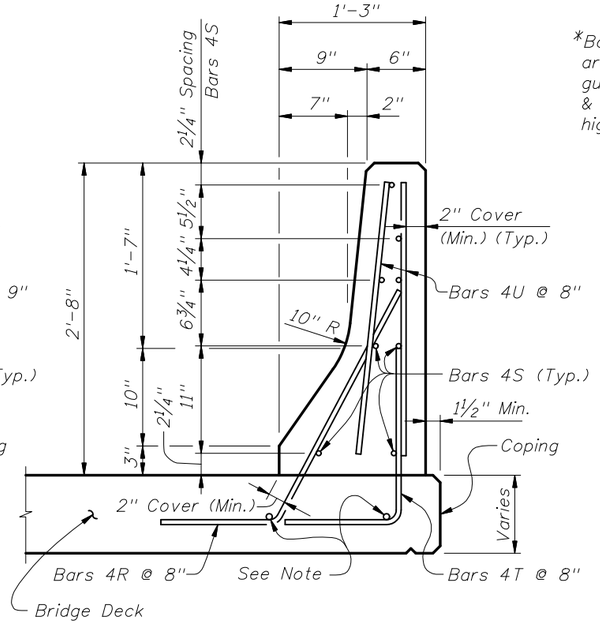

TYPICAL SECTION THRU NEW JERSEY SHAPE RAILING - INDEX NOS. 11407, 11460, 12670 & 12931 (Index No. 11407 shown, Index Nos. 11460, 12670 & 12931 similar)

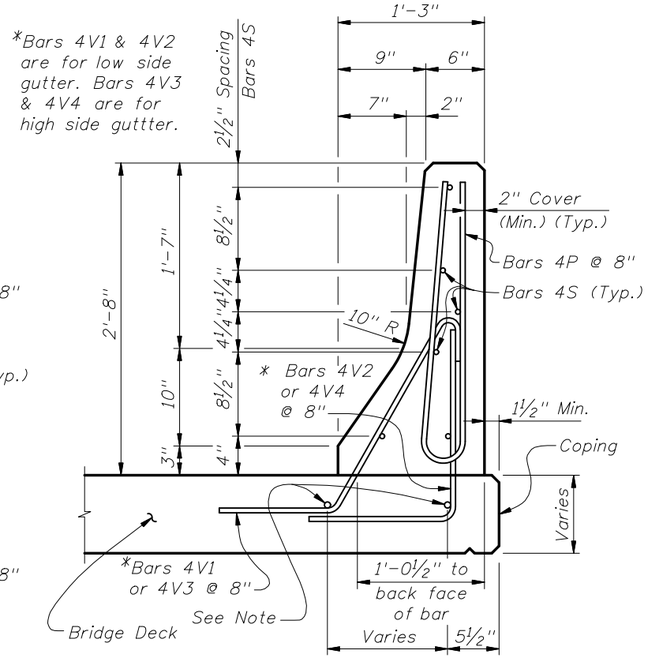

TYPICAL SECTION THRU NEW JERSEY SHAPE RAILING - INDEX NO. 13857 & 14101

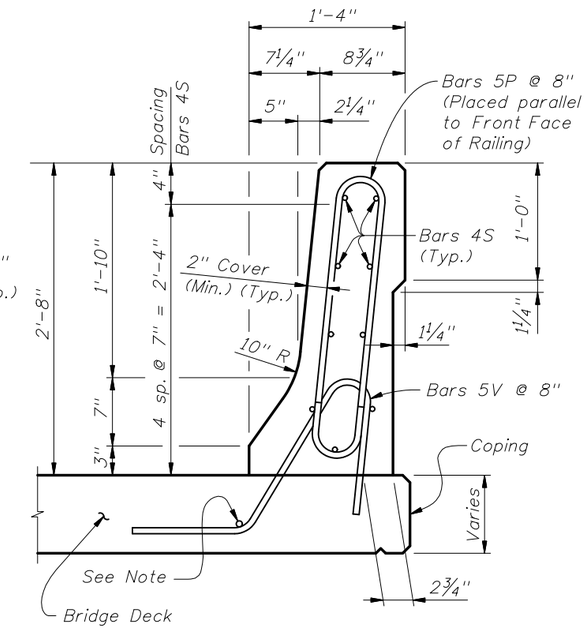

TYPICAL SECTION THRU F SHAPE RAILING INDEX NO. 14286

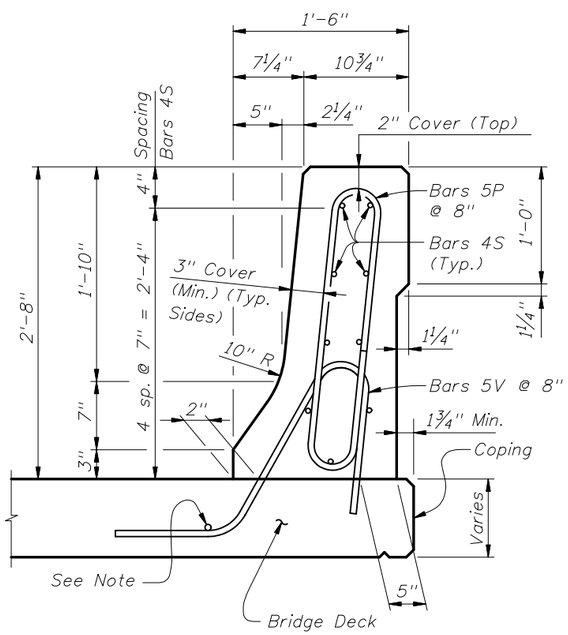

TYPICAL SECTION THRU F SHAPE RAILING INDEX NO. 700

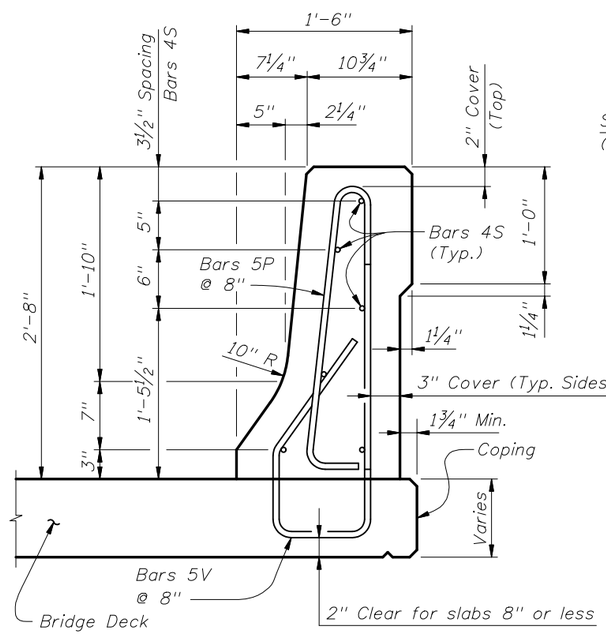

TYPICAL SECTION THRU F SHAPE RAILING INDEX NO. 700

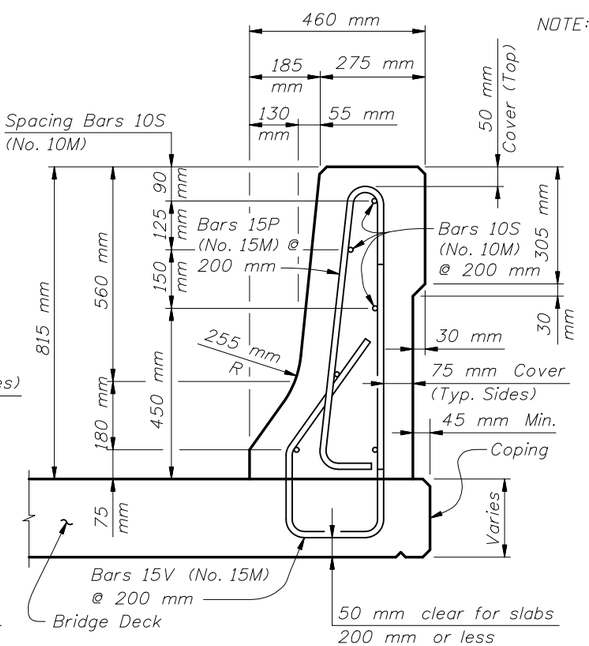

NOTE: Bottom Slab Longitudinal Steelplaced as shown to facilitate tying.

TYPICAL SECTION THRU F SHAPE RAILING (Metric with hard converted rebar) INDEX NO. 700

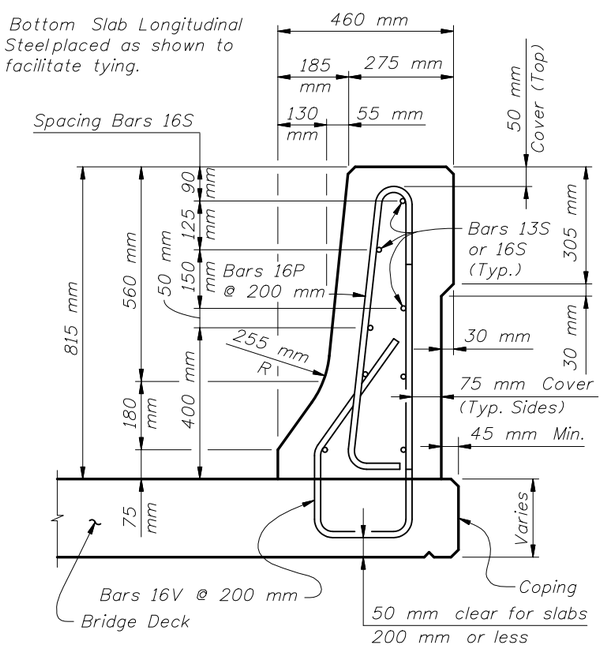

TYPICAL SECTION THRU F SHAPE RAILING (Metric with soft converted rebar) INDEX NO. 700

EXISTING FDOT TRAFFIC RAILING DETAILS

SHEET NO. 3 of 3

INSTRUCTIONS TO THE STRUCTURES AND ROADWAY ENGINEERS:

The Traffic Railing (Thrie Beam Retrofit), Design Standards Index Nos. 470 through 476, are applicable for retrofitting specific types of existing bridge mounted traffic railings (a.k.a. concrete handrails) that are not based on crash tested designs. These Standards are to be used in conjunction with Design Standards Index No. 402. Guidance and instructions are provided herein for evaluating the subject existing traffic railings and subsequently preparing the Plans necessary to accomplish the retrofit.

A coordinated effort between the Structures and Roadway Engineers is required to properly complete the evaluation and Plans preparation tasks for the retrofit. Using these instructions, the Structures Engineer shall select the appropriate Standard and scheme for a particular location. Once this selection has been made, the Structures and/or Roadway Engineer(s) shall then prepare the required Plans in accordance with the details and instructions provided herein. The applicability of the Thrie Beam Retrofit to a particular bridge shall be determined based on a review of the Load Rating of the existing bridge, a comparison of the existing bridge geometry to that shown for the Thrie Beam Retrofit and an evaluation of the structural adequacy of the existing bridge deck and wing walls in accordance with the requirements of the Structures Design Guidelines. The average weights per linear foot of the retrofits are 40 lb/ft for Index Nos. 471, 475 and 476 and 30 lb/ft for Index Nos. 472, 473 and 474.

The Traffic Railing (Thrie Beam Retrofit), presented in Design Standards Index Nos. 470 through 476, is based on a design that has been successfully crash tested in accordance with NCHRP Report 350 Test Level 4 criteria. The Standards all utilize 10 Gauge Thrie Beam Guardrail that is installed adjacent to the face of the existing curb and in front of, or in place of, all or part of the existing traffic railing. The Standards work with existing traffic railings that incorporate either solid concrete parapet type or concrete post and beam type railings with or without top mounted metal railings. These existing traffic railings are typically mounted on top of concrete curbs of varying widths and heights. The individual Standards address both narrow and wide curbs (a.k.a. "safety curbs"), and skewed and non-skewed bridges with parallel, perpendicular, angled or flared end bent wing walls. Each Standard includes several schemes that address the given wing wall configurations. Examples depicting existing curb and end bent wing wall configurations are shown in the Existing Curb Schematics and the Partial Plan Views of Existing Bridges herein.

Generally, the Roadway Plans shall include all of the sheets necessary to define and detail the retrofit of the existing traffic railings. Design Standards Index No. 470, Traffic Railing (Thrie Beam Retrofit) General Notes and Details shall be referenced in the Roadway Plans, or a similar project specific drawing depicting general notes and details, shall be included in the Roadway Plans. In addition, one or more of the appropriate Design Standards Indexes, Nos. 471 through 476, that most closely matches the configuration of the existing traffic railing and curb is to be referenced in the Roadway Plans for each bridge as required. Generally, these Standards can be used without any modifications being made to them. More than one of the Design Standards Index Nos. 471 through 476, may be required for a single bridge due to the curbs or sidewalks on the two sides of the bridge possibly having different widths. A separate Plan and Elevation sheet of the type used in Structures Plans is generally not required.

The heights of the exposed portions of the existing bridge curbs may vary and shall be determined by field measurement. These Standards are applicable for bridges with exposed curb heights from 5" to 1'-0". If resurfacing of the bridge deck is proposed, then the Roadway Engineer shall ensure sufficient milling depth is shown in the Plans in order to maintain the 5" minimum exposed curb height. The appropriate post designation of "A", "B" or "C" shall be determined and shown in the Plans for each bridge based on the criteria given in the Post Dimension Table on Design Standards Index No. 470. The selection of the appropriate post shall consider any proposed milling and resurfacing work. The limiting stations or overall length of the retrofit for each bridge shall also be shown. An example of a note containing the required information as it would appear on a Plan or Plan-Profile sheet is as follows: "Construct Traffic Railing (Thrie Beam Retrofit), Index No. 47X, Scheme X, from Sta. XX+XX.XX (at or near Begin Bridge) to Sta. XX+XX.XX (at or near End Bridge). On left side of bridge utilize Post "X". On right side of bridge utilize Post "X". See Design Standards Index No. 470 for post details." If the same height post can be used on both sides of the bridge, a single post designation is all that is required. For projects with multiple bridges, a tabular format may be used to convey the necessary information.

The need to remove all or part of the existing traffic railing down to the top of the curb in order to provide room for the construction of the retrofit is addressed in the individual Standards. Payment for the removal of all or part of the existing traffic railing shall be included in Removal of Existing Structures, Pay Item 110-3. As part of the overall retrofit concept for a bridge, the existing traffic railing may be removed, even though it is not specifically required to be, in order to reduce the dead load carried by the bridge. In these cases, the potential drop off hazard for pedestrians that will be created behind the retrofit shall be addressed in the Plans.

The treatment of the approach end of the retrofit shall consist of Design Standards Index No. 402 or another appropriate site specific treatment. The appropriate treatment of the trailing end of the retrofit shall be determined by the Roadway Engineer. As a minimum, if no other hazards are present, a Design Standards Index No. 400, W-Thrie Beam Transition Section and an End Anchorage Assembly Type II shall be provided on the trailing end of the retrofit. On approach ends, a Transition Block or Curb is required if the existing Approach Slab does not have a curb. A Transition Block is not required on trailing ends with no opposing traffic, however, a Curb may be required due to drainage needs. A Design Standards Index No. 300, Type D Concrete Curb is generally suitable for this application. The appropriate site specific approach and trailing end treatments shall be shown in the Plans.

Design Standards Index Nos. 402 and 470 through 476 shall be supplemented as required with project specific details that may be deemed necessary to complete the installation of the retrofit. These details may include locations and details of any existing utilities, conduits, drainage structures, sign structures and luminaire supports, and/or any other needed information not included in these Standards. In the event that the designs and details presented in the Standards do not closely match the existing conditions, the Structures and/or Roadway Engineer(s) shall prepare a customized project specific retrofit design based on the crash tested bridge railing and guardrail transition designs presented in Design Standards Index Nos. 402 and 470 through 476 as guides. Contact the Structures Design Office and Roadway Design Office for guidance in this event.

The Structures Engineer shall evaluate the thermal movements of the existing bridge using the following criteria and shall identify the locations in the Plans (if any are required) where a Thrie Beam Expansion Section is to be included in the guardrail. If the total thermal movement at an individual bridge deck expansion joint is 1½" (¾" in each direction) or less, the Thrie Beam Guardrail shall span the joint without the use of an expansion section. If the total thermal movement at an individual bridge deck expansion joint exceeds 1½", a Thrie Beam Expansion Section must be installed at that location. The total amount of thermal movement at bridge deck expansion joints shall be determined by theoretical calculation and confirmed by field measurements where possible. It should be noted that the actual in-service movement due to thermal effects may be less than the value determined by theoretical calculation.

The Utility Adjustment Plans, if required, shall contain all necessary utility adjustment information required for the construction of the retrofit. Utilities and/or conduits may exist in or adjacent to the existing traffic railings and will vary in size, number and location. The presence, size, number and locations of existing utilities and/or conduits shall be determined by a review of existing Plans and confirmed by field verification. It should be noted that utility and/or conduit installations may vary by location on a single bridge. Thus, a field verification shall be conducted for each individual installation of the retrofit. Existing utilities and/or conduits that conflict with the retrofit shall be relocated if possible or placed out of service. The required field verification work should be completed as early in the evaluation phase as possible.

The Traffic Control Plans for the construction of the retrofit shall be prepared in accordance with Design Standards Index No. 600 Series. The Plans shall address all aspects of the full or partial removal of the existing traffic railing (when required) and construction of the retrofit. Generally, the use of Index Nos. 471 and 474 will require the removal of the existing traffic railing and will require traffic control consisting of shifting, narrowing and/or closing of travel lanes and or shoulders. In this case, the use of crash tested Precast Concrete Temporary Barriers will also be required to protect the drop-off exposed by the removal of the existing traffic railing.

Design Standards Index Nos. 470 through 476 do not address retrofitting of the existing traffic railings, curbs or sidewalks for pedestrian use. The potential need to retrofit the existing bridge for pedestrian use shall be evaluated on a project by project basis and the necessary Plans developed accordingly. Generally, the potential effects on pedestrian use of the bridge will be confined to bridges with sidewalks or wide curbs. The use of Design Standards Index No. 400, Pedestrian Safety Pipe Rail, shall be evaluated and noted in the Plans where appropriate. The reduction in clear width of the curb or sidewalk caused by the installation of the retrofit and Pedestrian Safety Pipe Rail shall be considered.

It should be noted that the existing traffic railings and/or guardrail end transitions may have been previously retrofitted utilizing a scheme presented in Roadway and Traffic Design Standards Index No. 401 (2000 and earlier Editions). In this event, the requirements for removal or replacement of the prior retrofit shall be evaluated and addressed in the Plans as required. The removal of the prior retrofit may be considered as incidental work with no separate payment made.

INSTRUCTIONS TO THE STRUCTURES AND ROADWAY ENGINEERS (CONT.):

The applicability of the individual retrofit schemes to different wing wall configurations is shown on Sheets 3 and 4 of 5. Example quantity calculations are shown on Sheet 5 of 5. The applicability of the individual Standards to different curb widths and superstructure types is described as follows:

Index No. 471 – Applicable for existing narrow curbs as shown below. This index requires removal of the existing traffic railing to the top of the existing curb along the entire length of the bridge and wing walls. On flat slab type superstructures, the potential reduction in the vertical clearance beneath the bridge due to the installation of this index shall be considered.

Index No. 472 – Applicable for existing wide curbs or sidewalks as shown below. This index generally allows the entire existing traffic railing to remain in place.

Index No. 473 – Applicable for existing wide curbs or sidewalks as shown below. This index generally allows the entire existing traffic railing to remain in place.

Index No. 474 – Applicable for existing intermediate width curbs as shown below. This index requires removal of the existing traffic railing to the top of the existing curb along the entire length of the bridge and wing walls.

Index No. 475 – Applicable for existing wide curbs or sidewalks as shown below on bridges with decks that do not meet the strength requirements for Index No. 472. This index generally allows the entire existing traffic railing to remain in place. This index is primarily intended for use on bridges with superstructures consisting of longitudinally prestressed, transversely post-tensioned, solid or voided concrete slab units but it can also be used for other types of superstructures.

Index No. 476 – Applicable for existing wide curbs or sidewalks as shown below on bridges with decks that do not meet the strength requirements for Index No. 473. This index generally allows the entire existing traffic railing to remain in place. On flat slab type superstructures, the potential reduction in the vertical clearance beneath the bridge due to the installation of this index shall be considered.

Index Nos. 471, 472 and 476 cannot be used on bridges with superstructures consisting of longitudinally prestressed, transversely post-tensioned, solid or voided concrete slab units.

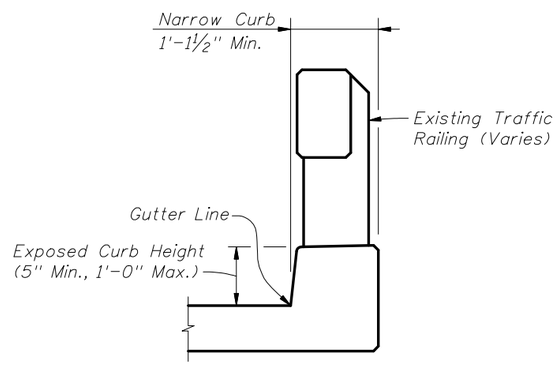

EXISTING NARROW CURB SCHEMATIC
USE INDEX NO. 471

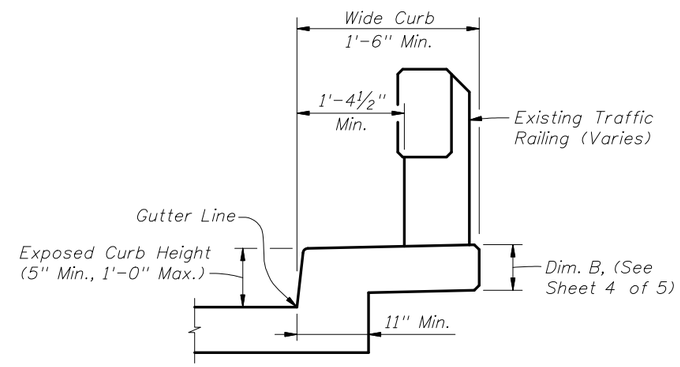

EXISTING WIDE CURB SCHEMATIC
USE INDEX NO. 472 & 475

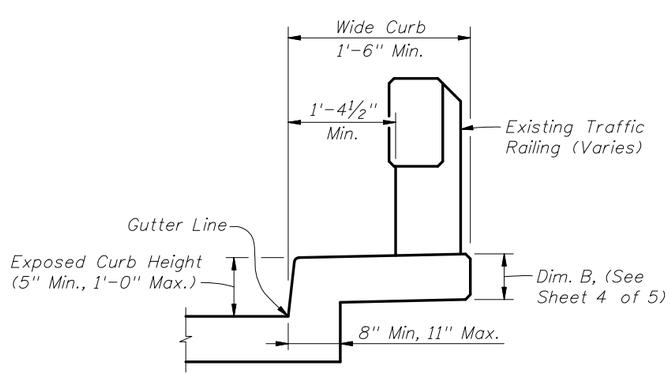

EXISTING WIDE CURB SCHEMATIC
USE INDEX NO. 473 & 476

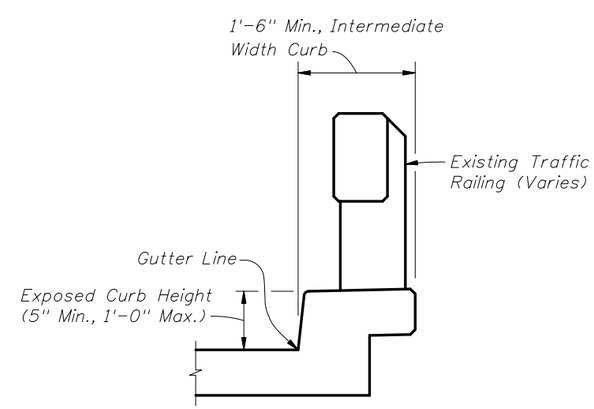

EXISTING INTERMEDIATE WIDTH CURB SCHEMATIC
USE INDEX NO. 474

TRAFFIC RAILING - (THRIE BEAM RETROFIT) INSTRUCTIONS	SHEET NO. 2 of 5

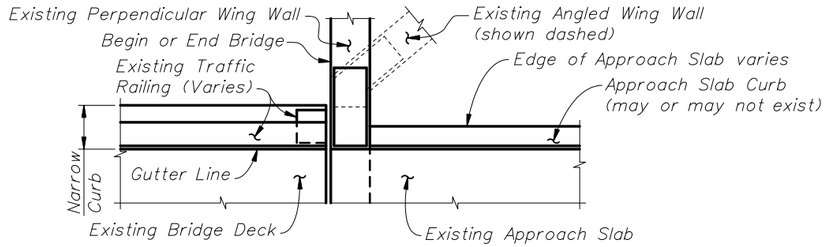

PARTIAL PLAN VIEW OF EXISTING BRIDGE WITH NARROW CURBS AND PERPENDICULAR OR ANGLED WING WALLS - USE INDEX NO. 471, SCHEME 1

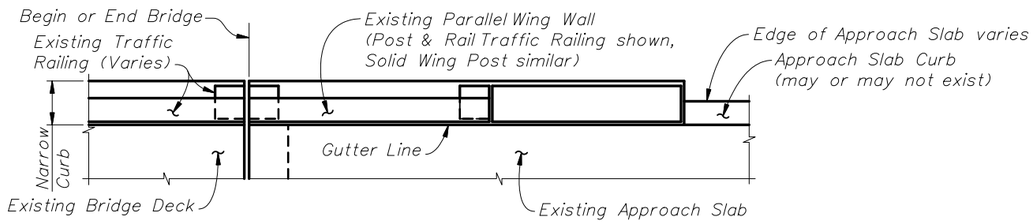

PARTIAL PLAN VIEW OF EXISTING BRIDGE WITH NARROW CURBS AND PARALLEL WING WALLS - USE INDEX NO. 471, SCHEME 2

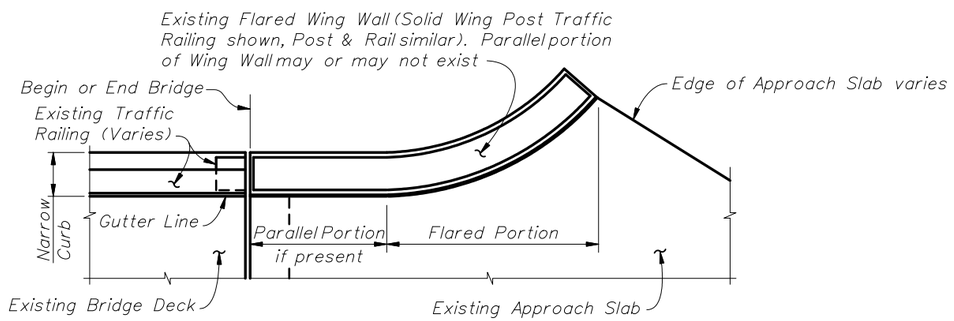

PARTIAL PLAN VIEW OF EXISTING BRIDGE WITH NARROW CURBS AND FLARED WING WALLS - USE INDEX NO. 471, SCHEME 3

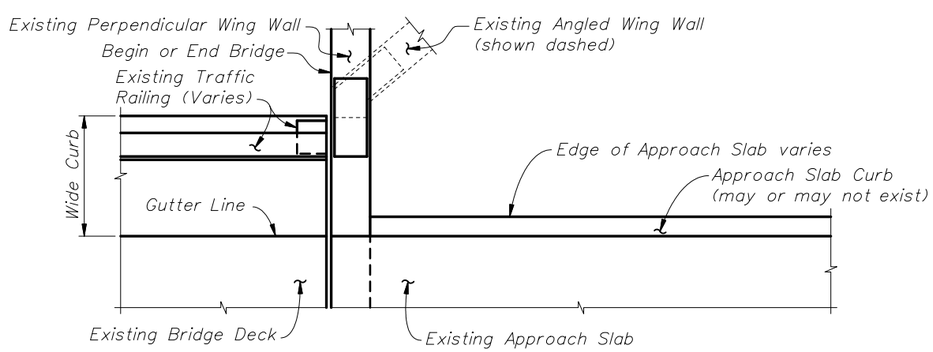

PARTIAL PLAN VIEW OF EXISTING BRIDGE WITH WIDE CURBS AND PERPENDICULAR OR ANGLED WING WALLS - USE INDEX NOS. 472, 473, 475 OR 476, SCHEME 1

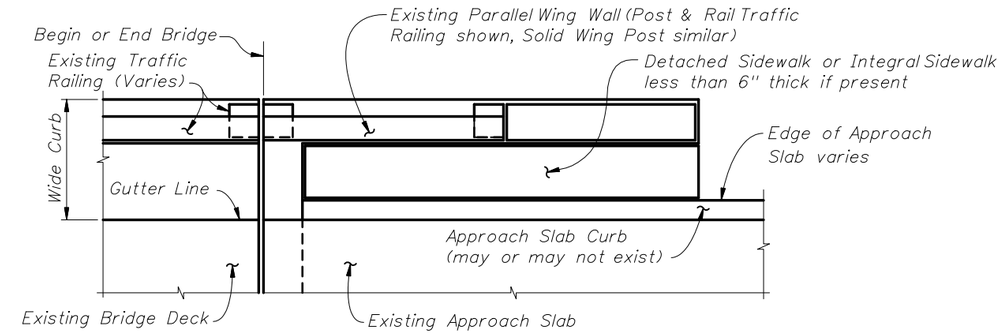

PARTIAL PLAN VIEW OF EXISTING BRIDGE WITH WIDE CURBS, PARALLEL WING WALLS AND APPROACH SLABS WITH DETACHED SIDEWALKS OR SIDEWALKS LESS THAN 6" THICK - USE INDEX NOS. 472, 473, 475 OR 476 SCHEME 2

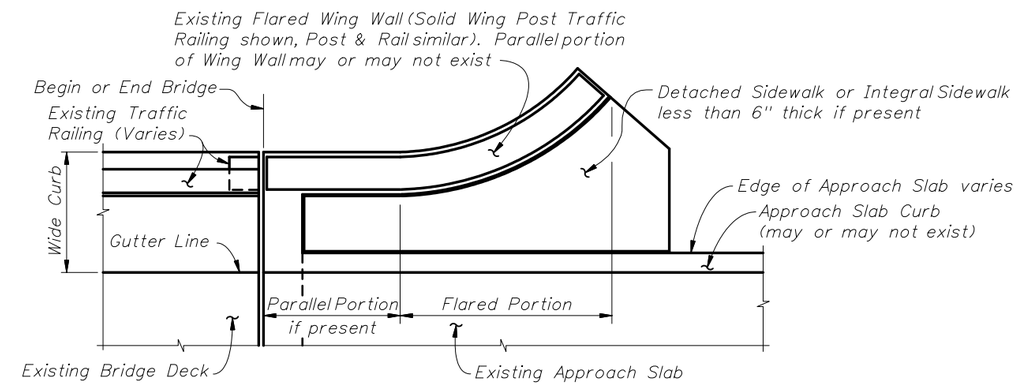

PARTIAL PLAN VIEW OF EXISTING BRIDGE WITH WIDE CURBS, FLARED WING WALLS AND APPROACH SLABS WITH DETACHED SIDEWALKS OR SIDEWALKS LESS THAN 6" THICK - USE INDEX NOS. 472, 473, 475 OR 476 SCHEME 2

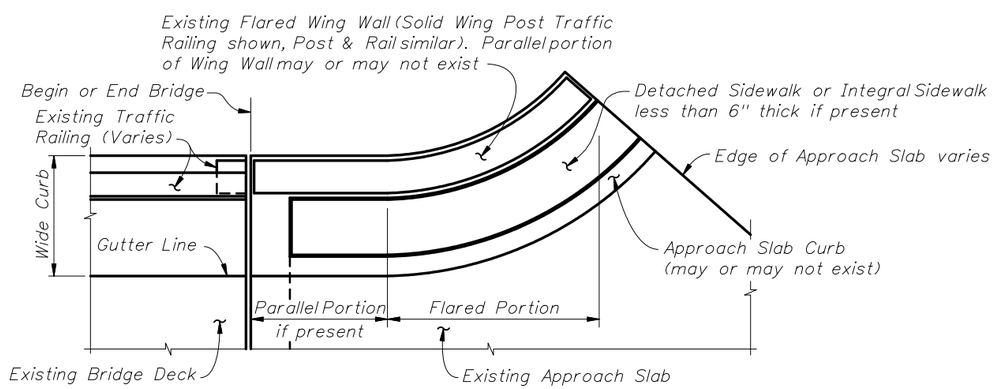

PARTIAL PLAN VIEW OF EXISTING BRIDGE WITH WIDE CURBS, FLARED WING WALLS AND APPROACH SLABS WITH DETACHED SIDEWALKS OR SIDEWALKS LESS THAN 6" THICK - USE INDEX NOS. 472, 473, 475 OR 476 SCHEME 2

NOTE: If Existing Curb or Wing Wall Dimension B is 1'-3" or greater use Scheme 3. If Existing Curb or Wing Wall Dimension B is equal to or greater than 6" but less than 1'-3", use Scheme 4. If Dimension B is less than 6", use Scheme 2. See Sheet 1 of 5 for Dimension B.

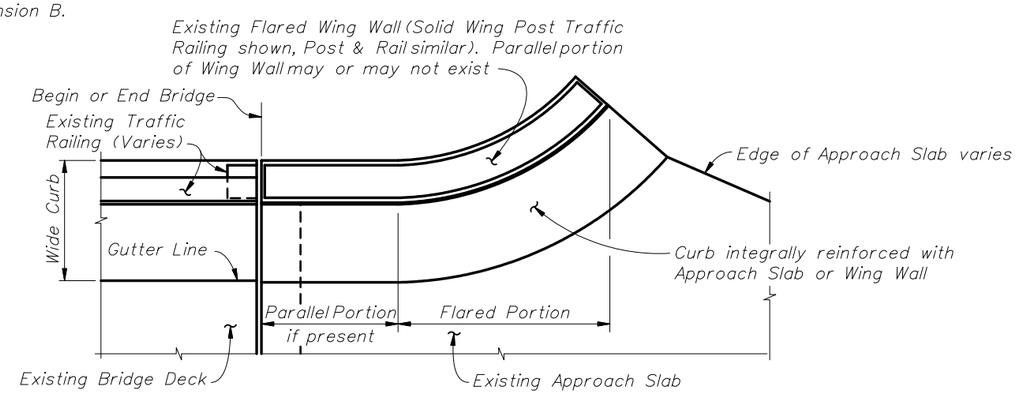

PARTIAL PLAN VIEW OF EXISTING BRIDGE WITH WIDE CURBS, FLARED WING WALLS AND FLARED INTEGRALLY REINFORCED APPROACH SLAB CURBS - USE INDEX NOS. 472, 473, 475 OR 476 SCHEMES 3 OR 4

NOTE: If Existing Curb or Wing Wall Dimension B is 1'-3" or greater use Scheme 5. If Existing Curb or Wing Wall Dimension B is equal to or greater than 6" but less than 1'-3", use Scheme 6. If Dimension B is less than 6", use Scheme 2. See Sheet 1 of 5 for Dimension B.

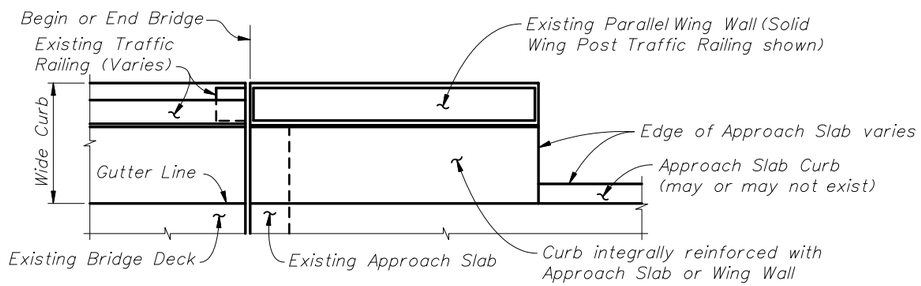

PARTIAL PLAN VIEW OF EXISTING BRIDGE WITH WIDE CURBS, PARALLEL WING WALLS AND INTEGRALLY REINFORCED APPROACH SLAB CURBS - USE INDEX NOS. 472, 473, 475 OR 476 SCHEMES 5 OR 6

NOTE: If Existing Curb or Wing Wall Dimension B is 1'-3" or greater use Scheme 5. If Existing Curb or Wing Wall Dimension B is equal to or greater than 6" but less than 1'-3", use Scheme 6. If Dimension B is less than 6", use Scheme 2. See Sheet 1 of 5 for Dimension B.

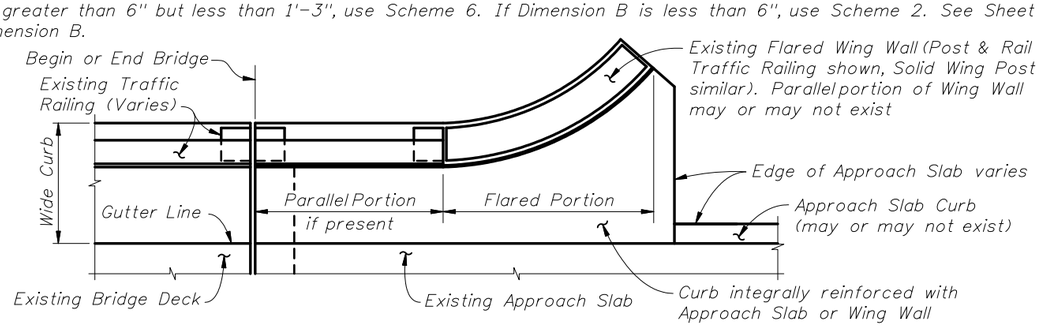

PARTIAL PLAN VIEW OF EXISTING BRIDGE WITH WIDE CURBS, FLARED WING WALLS AND PARALLEL INTEGRALLY REINFORCED APPROACH SLAB CURBS - USE INDEX NOS. 472, 473, 475 OR 476 SCHEMES 5 OR 6

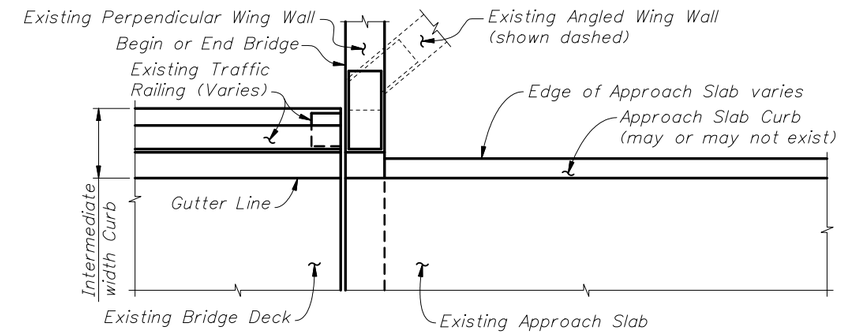

PARTIAL PLAN VIEW OF EXISTING BRIDGE WITH INTERMEDIATE WIDTH CURBS AND PERPENDICULAR OR ANGLED WING WALLS - USE INDEX NO. 474, SCHEME 1

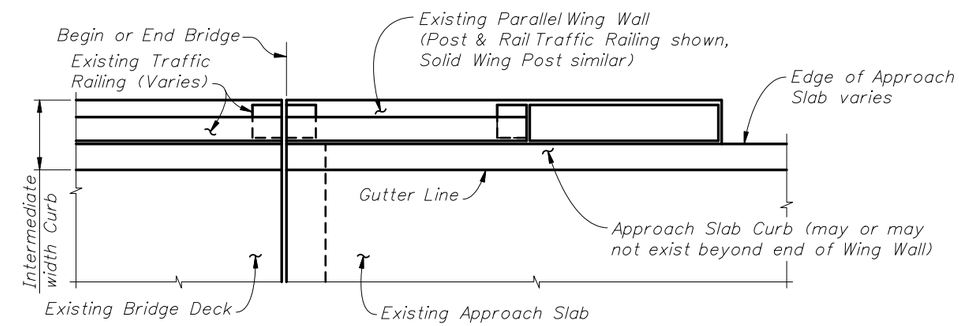

PARTIAL PLAN VIEW OF EXISTING BRIDGE WITH INTERMEDIATE WIDTH CURBS AND PERPENDICULAR OR ANGLED WING WALLS - USE INDEX NO. 474, SCHEME 2

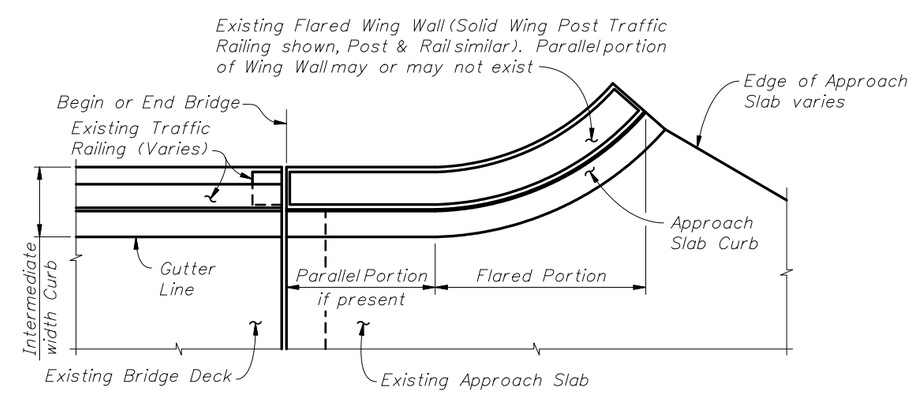

PARTIAL PLAN VIEW OF EXISTING BRIDGE WITH INTERMEDIATE WIDTH CURBS, FLARED WING WALLS AND FLARED INTEGRAL APPROACH SLAB CURBS - USE INDEX NO. 474, SCHEME 3

EXAMPLE QUANTITY CALCULATIONS

The following examples cover the three general cases for quantity calculations for the length of payment along each side of a bridge:

CASE I - Index Nos. 471 and 474 Scheme 2 and Index Nos. 472, 473, 475 and 476 Schemes 5 and 6 - Traffic Railing (Thrie Beam Retrofit) extends close to the end of the wing wall or parallel curb on the approach slab.

CASE II - Index Nos. 471, 472, 473, 474, 475 and 476 Scheme 1 and Index Nos. 472, 473, 475 and 476 Scheme 2 - Traffic Railing (Thrie Beam Retrofit) extends close to the end of the bridge deck.

CASE III - Index Nos. 472, 473, 475 and 476 Schemes 3 and 4 and Index No. 474 Scheme 3 - Traffic Railing (Thrie Beam Retrofit) extends far enough along the flared curb until the Special Steel Guardrail Post can be located on the approach slab.

In the following examples, it is assumed that the trailing end treatment is the same as the approach end treatment. For Case III, Index Nos. 472, 473, 475 and 476 Schemes 3 and 4, different trailing end treatments usually give an error of less than one foot for each side of the bridge. Different trailing end treatments for Case III, Index No. 474 Scheme 3 may give an error of ± 3'-0", due to the flexibility given to the Contractor for locating the posts on the flared wing wall. The Designer may need to show stationing limits in the plans for these Standard Indexes when the location of a site specific end treatment is critical. Different trailing end treaments for Case I and Case II will have no effect on the length of payment.

For bridges with different wing wall lengths at begin and end bridge, such as skewed bridges, the calculated lengths should be adjusted accordingly for Cases I & III.

For curved bridges the length of payment shall be measured along the gutter line, and the arc angle projection of the gutter line for flared curbs (Case III).

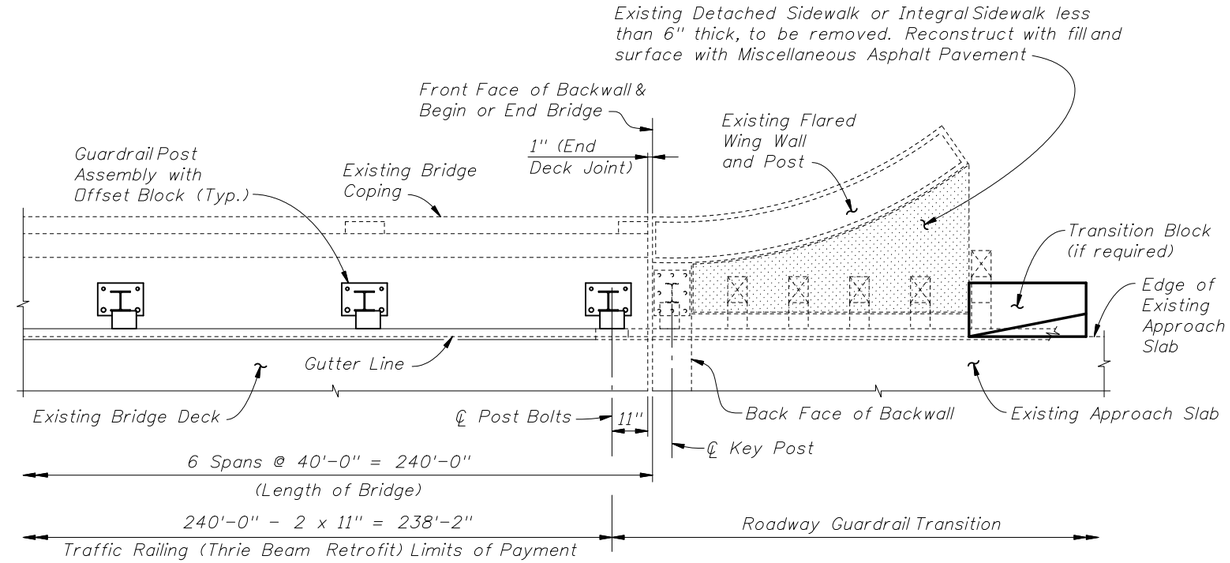

EXAMPLE QUANTITY CALCULATION - CASE II
(INDEX NO. 472 SCHEME 2 SHOWN,
INDEX NOS. 471, 472, 473, 474, 475 AND 476
SCHEME 1 AND INDEX NOS. 473 AND 476 SCHEME 2 SIMILAR)

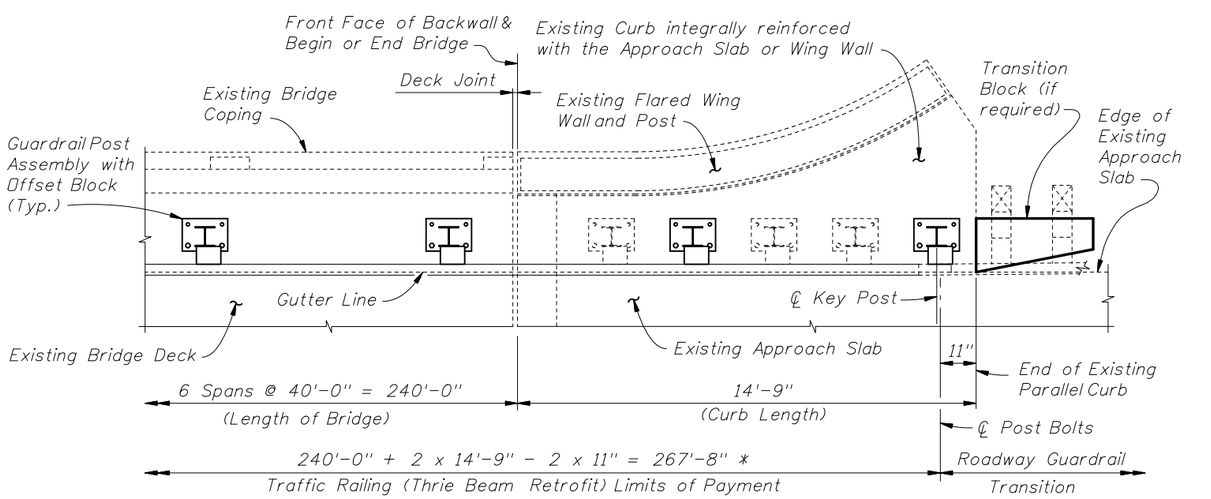

EXAMPLE QUANTITY CALCULATION - CASE I
(INDEX NO. 472 SCHEMES 5 AND 6 SHOWN,
INDEX NOS. 471 AND 474 SCHEME 2 AND INDEX NOS. 473, 475 AND 476
SCHEMES 5 AND 6 SIMILAR)

* Total length could vary - 5⅞" to + 9⅛" due to trailing end treatment and positioning of end posts for minimum anchor clearances.

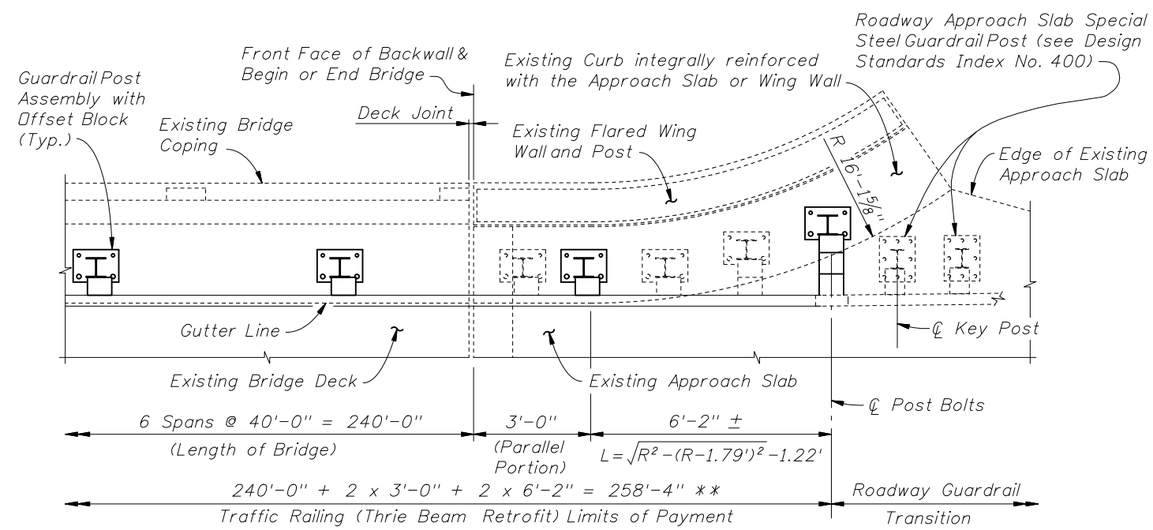

EXAMPLE QUANTITY CALCULATION - CASE III
(INDEX NO. 472 SCHEMES 3 AND 4 SHOWN,
INDEX NOS. 473, 475 AND 476 SCHEMES 3 AND 4
AND INDEX NO. 474 SCHEME 3 SIMILAR)

** Total length could vary due to trailing end treatment.

INSTRUCTIONS TO THE STRUCTURES AND ROADWAY ENGINEERS:

The Traffic Railing (Vertical Face Retrofit), Design Standards Index Nos. 480 through 483, are applicable for retrofitting specific types of existing bridge mounted traffic railings (a.k.a. concrete handrails) that are not based on crash tested designs. These Standards are to be used in conjunction with Design Standards Index Nos. 402 and 410. Guidance and instructions are provided herein for evaluating the subject existing traffic railings and subsequently preparing the Plans necessary to accomplish the retrofit.

A coordinated effort between the Structures and Roadway Engineers is required to properly complete the evaluation and Plans preparation tasks for the retrofit. Using these instructions, the Structures Engineer shall select the appropriate Standard and scheme for a particular location. Once this selection has been made, the Structures and or Roadway Engineer(s) shall then prepare the required Plans in accordance with the details and instructions provided herein. The applicability of the Vertical Face Retrofit to a particular bridge shall be determined based on a review of the Load Rating of the existing bridge, a comparison of the existing bridge geometry to that shown for the Vertical Face Retrofit and an evaluation of the structural adequacy of the existing bridge deck and wing walls in accordance with the requirements of the Structures Design Guidelines. The average weight per linear foot of the retrofit installed on an 8 inch tall curb is 270 lb/ft.

The Traffic Railing (Vertical Face Retrofit), presented in Design Standards Index Nos. 480 through 483, has been structurally evaluated to be equivalent or greater in strength to a design which has been successfully crash tested previously and approved for a NCHRP Report 350 Test Level 4 rating. The Standards all utilize a cast in place, vertical face, reinforced concrete block that is installed adjacent to the face of the existing curb and in front of, or in place of, all or part of the existing traffic railing. The Standards work with existing traffic railings that incorporate either solid concrete parapet type or concrete post and beam type railings with or without top mounted metal railings. These existing traffic railings are typically mounted on top of concrete curbs of varying widths and heights. The individual Standards address both narrow and wide curbs (a.k.a. "safety curbs"), and skewed and non-skewed bridges with parallel, perpendicular, angled or flared end bent wing walls. Each Standard includes several schemes that address the given wing wall configurations. Examples depicting existing curb and end bent wing wall configurations are shown in the Existing Curb Schematic and the Partial Plan Views of Existing Bridges herein.

Generally, the Roadway Plans shall include all of the sheets necessary to define and detail the retrofit of the existing traffic railings. Design Standards Index No. 480, Traffic Railing (Vertical Face Retrofit) General Notes and Details, shall be referenced in the Roadway Plans or a similar project specific drawing depicting general notes and details, shall be included in the Roadway Plans. In addition, one or more of the appropriate Design Standards Indexes Nos.481 through 483, that most closely matches the configuration of the existing traffic railing and curb is to be referenced in the Roadway Plans for each bridge as required. Generally, these Standards can be used without any modifications being made to them. More than one of the Standards, Index Nos. 481 through 483, may be required for a single bridge due to the curbs or sidewalks on the two sides of the bridge possibly having different widths. The appropriate Design Standards Index number and Scheme number shall be shown in the Roadway Plans for each bridge along with the limiting stations of the retrofit. An example of a note containing the required information as it would appear on a Plan or Plan-Profile sheet is as follows: "Construct Traffic Railing (Vertical Face Retrofit), Index No. 48X, Scheme X, from Sta. XX+XX.XX (at or near Begin Bridge) to Sta. XX+XX.XX (at or near End Bridge)." For projects with multiple bridges, a tabular format may be used to convey the necessary information. A separate Plan and Elevation sheet of the type used in Structures Plans is generally not required.

The need to remove all or part of the existing traffic railing down to the top of the curb in order to provide room for the construction of the retrofit is addressed in the individual retrofit indexes. Payment for the removal of all or part of the existing traffic railing shall be included in Removal of Existing Structures, Pay Item 110-3. As part of the overall retrofit concept for a bridge, the existing traffic railing may be removed, even though it is not specifically required to be, in order to reduce the dead load carried by the bridge. In these cases, the potential drop off hazard for pedestrians that will be created behind the retrofit shall be addressed in the Plans.

The treatment of the approach end of the retrofit shall consist of Design Standards Index No. 402 or another appropriate site specific treatment. The appropriate treatment of the trailing end of the retrofit shall be determined by the Roadway Engineer. On approach ends, a Transition Block or Curb is required if the existing Approach Slab does not have a curb. A Transition Block is not required on trailing ends with no opposing traffic, however, a Curb may be required due to drainage needs. A Design Standards Index No. 300, Type D Concrete Curb is generally suitable for this application. The appropriate site specific approach and trailing end treatments shall be shown in the Plans.

If a Design Standards Index No. 402 Roadway Guardrail Transition is used, the defining station of the end of the transition must be shown in the Plans. The attachment point for the Thrie Beam Terminal Connector shall be determined based on the shape, length, structural adequacy and direct means of support of the end most section of the Vertical Face Retrofit, the existing wing wall and or approach slab as follows:

Perpendicular or Angled Wing Walls -

Attach the Thrie Beam Terminal Connector to the Vertical Face Retrofit on the bridge.

Parallel Wing Walls -

1. If the Vertical Face Retrofit is supported by the wing wall, attach the Thrie Beam Terminal Connector to the Vertical Face Retrofit along the wing wall if the wing wall is a minimum of 5'-0" long, directly pile supported and structurally adequate. If the Vertical Face Retrofit is supported by the approach slab, attach the Thrie Beam Terminal Connector along the approach slab section of the retrofit if that section is a minimum of 5'-0" long.
2. Attach Thrie Beam Terminal Connector to the Vertical Face Retrofit on the bridge if the any of the appropriate preceding criteria for parallel wing walls or approach slabs are not met.

Flared Wing Walls with parallel portions -

1. If the Vertical Face Retrofit is supported by the wing wall, attach the Thrie Beam Terminal Connector to the Vertical Face Retrofit along the parallel portion of the Vertical Face Retrofit if the wing wall is a minimum of 5'-0" long, directly pile supported, structurally adequate and if the parallel portion of Vertical Face Retrofit is a minimum of 2'-0" long. If the Vertical Face Retrofit is supported by the approach slab, attach the Thrie Beam Terminal Connector along the approach slab section of the retrofit if that section is a minimum of 5'-0" long and has a parallel portion that is a minimum of 2'-0" long.
2. Attach Thrie Beam Terminal Connector to the Vertical Face Retrofit on the bridge if any of the preceding criteria for flared wing walls with parallel portions are not met.

Flared Wing Walls without parallel portions -

Attach Thrie Beam Terminal Connector to the Vertical Face Retrofit on the bridge.

Design Standards Index Nos. 402 and 480 through 483 shall be supplemented as required with project specific details that may be deemed necessary to complete the installation of the retrofit railing. These details may include locations and details of any existing utilities, conduits, drainage structures, sign structures and luminaire supports, or designs and details of traffic railing sliding plate assemblies for large expansion joints and any other needed information not included in these Standards. In the event that the details and indexes presented in these Standards do not closely match the existing conditions, the Structures and or Roadway Engineer(s) shall prepare a customized project specific retrofit design using the crash tested bridge railing and guardrail transition designs presented in Design Standard Index Nos. 402 and 480 through 483 as guides. Contact the Structures Design Office and Roadway Design Office for guidance in this event.

The Utility Adjustment Plans, if required, shall contain all necessary utility adjustment information required for the retrofit of the existing traffic railings. Utilities and/or conduits may exist in or adjacent to the existing traffic railings and will vary in size, number and location. The presence, size, number and locations of existing utilities and/or conduits shall be determined by a review of existing Plans and confirmed by field verification. It should be noted that utility and/or conduit installations may vary by location on a single bridge. Thus, a field verification shall be conducted for each individual installation of the retrofit. Existing utilities and/or conduits that conflict with the retrofit shall be relocated if possible or placed out of service. The required field verification work should be completed as early in the evaluation phase as possible.

The Traffic Control Plans for the construction of the retrofit shall be prepared in accordance with Design Standards Index No. 600 Series. The Plans shall address all aspects of the full or partial removal of the existing traffic railing (when required) and construction of the retrofit. Generally, the use of Index Nos. 481 and 483 will require the removal of the existing traffic railing and will require traffic control consisting of shifting, narrowing and or closing of travel lanes and or shoulders. In this case, the use of crash tested Precast Concrete Temporary Barriers will also be required to protect the drop-off exposed by the removal of the existing traffic railing.

Design Standards Index Nos. 480 through 483 do not address retrofitting of the existing traffic railings, curbs or sidewalks for pedestrian use. The potential need to retrofit the existing bridge for pedestrian use shall be evaluated on a project by project basis and the necessary Plans developed accordingly. Generally, the potential effects on pedestrian use of the bridge will be confined to bridges with sidewalks or wide curbs. The reduction in clear width of the curb or sidewalk caused by the installation of the retrofit shall be considered.

It should be noted that the existing traffic railings and or guardrail end transitions may have been previously retrofitted utilizing a scheme presented in Roadway and Traffic Design Standards Index No. 401 (2000 and earlier Editions). In this event, the requirements for removal, modification or replacement of the prior retrofit shall be evaluated and addressed in the Plans as required. Of the retrofit schemes presented in Roadway and Traffic Design Standards Index No. 401, only Schemes 1 and 19 can be left in placed and utilized as a component of the crash tested designs presented in Design Standards Index Nos. 402 and 480 through 483. The removal of the prior retrofit, if required, may be considered as incidental work with no separate payment made.

INSTRUCTIONS TO THE STRUCTURES AND ROADWAY ENGINEERS (CONT.):

The applicability of the individual retrofit schemes to different wing wall configurations is shown on Drawings 3 and 4 of 4.
The applicability of the individual Standards to different curb widths is described as follows:

Index No. 481 – Applicable for existing narrow curbs as shown below. This index requires removal of the existing traffic railing to the top of the existing curb along the entire length of the bridge and wing walls.
Index No. 482 – Applicable for existing wide curbs or sidewalks as shown below. This index generally allows the entire existing traffic railing to remain in place.
Index No. 483 – Applicable for existing intermediate width curbs as shown below. This index requires removal of the existing traffic railing to the top of the existing curb along the entire length of the bridge and wing walls.

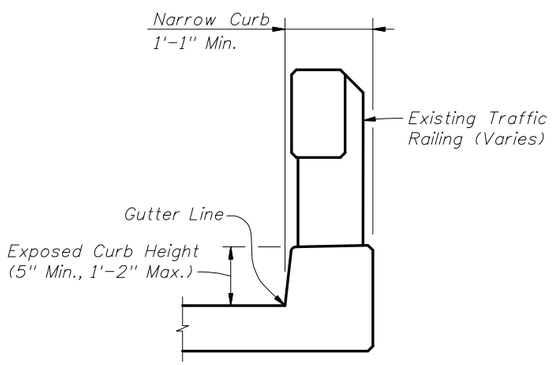

EXISTING NARROW CURB SCHEMATIC
USE INDEX NO. 481

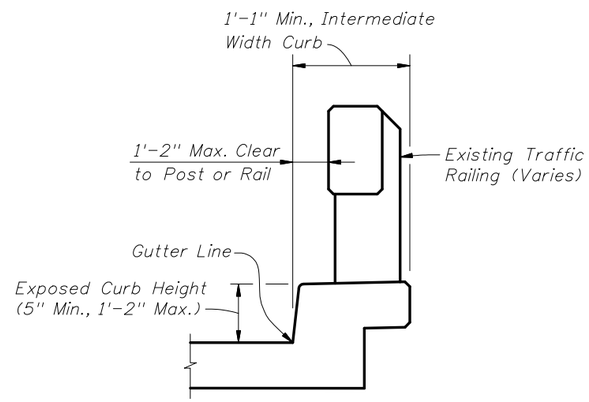

EXISTING INTERMEDIATE WIDTH CURB SCHEMATIC
USE INDEX NO. 483

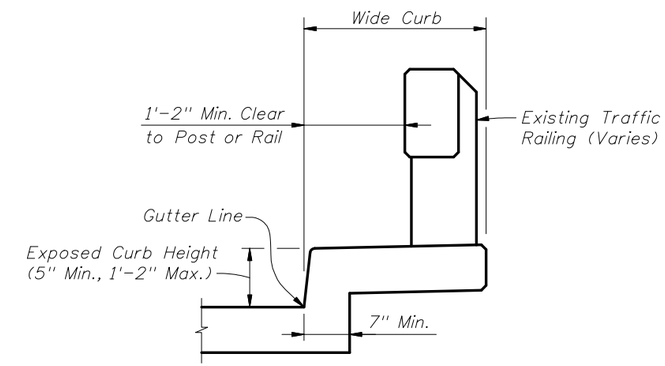

EXISTING WIDE CURB SCHEMATIC
USE INDEX NO. 482

TRAFFIC RAILING - (VERTICAL FACE RETROFIT) INSTRUCTIONS	SHEET NO. 2 of 4

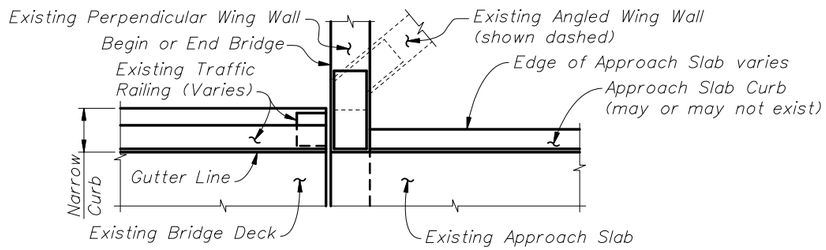

PARTIAL PLAN VIEW OF EXISTING BRIDGE WITH NARROW CURBS AND PERPENDICULAR OR ANGLED WING WALLS - USE INDEX NO. 481, SCHEME 1

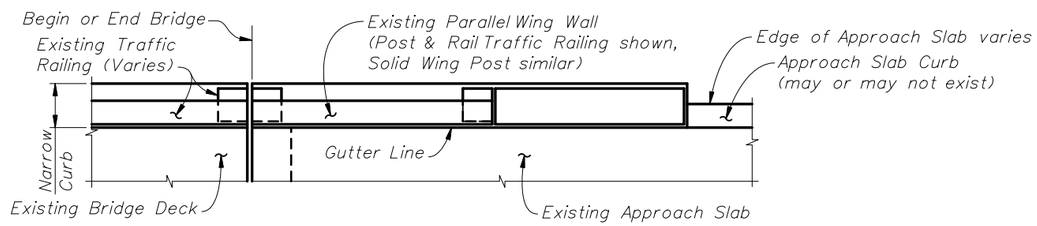

PARTIAL PLAN VIEW OF EXISTING BRIDGE WITH NARROW CURBS AND PARALLEL WING WALLS - USE INDEX NO. 481, SCHEME 2

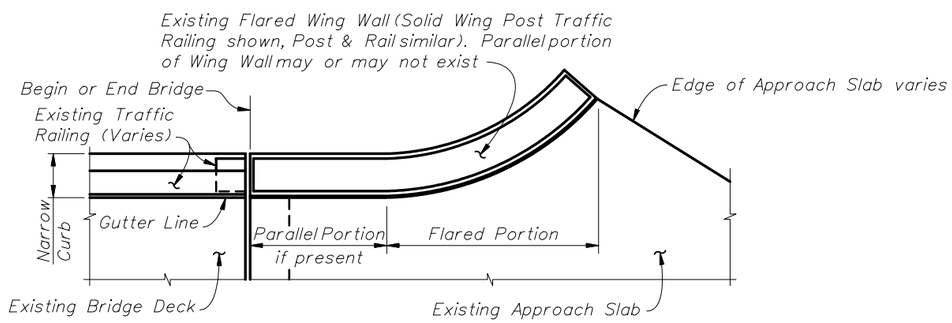

PARTIAL PLAN VIEW OF EXISTING BRIDGE WITH NARROW CURBS AND FLARED WING WALLS - USE INDEX NO. 481, SCHEME 3

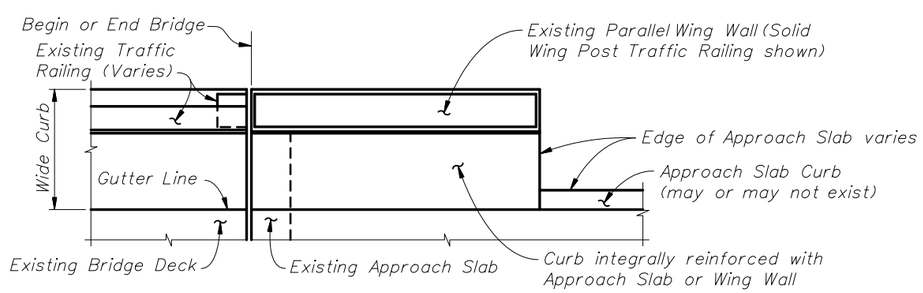

PARTIAL PLAN VIEW OF EXISTING BRIDGE WITH WIDE CURBS, PARALLEL WING WALLS AND INTEGRALLY REINFORCED APPROACH SLAB CURBS - USE INDEX NO. 482, SCHEME 2

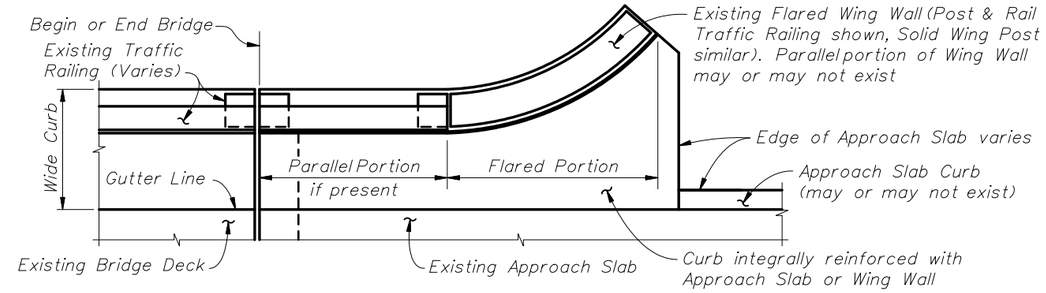

PARTIAL PLAN VIEW OF EXISTING BRIDGE WITH WIDE CURBS, FLARED WING WALLS AND PARALLEL INTEGRALLY REINFORCED APPROACH SLAB CURBS - USE INDEX NO. 482, SCHEME 2

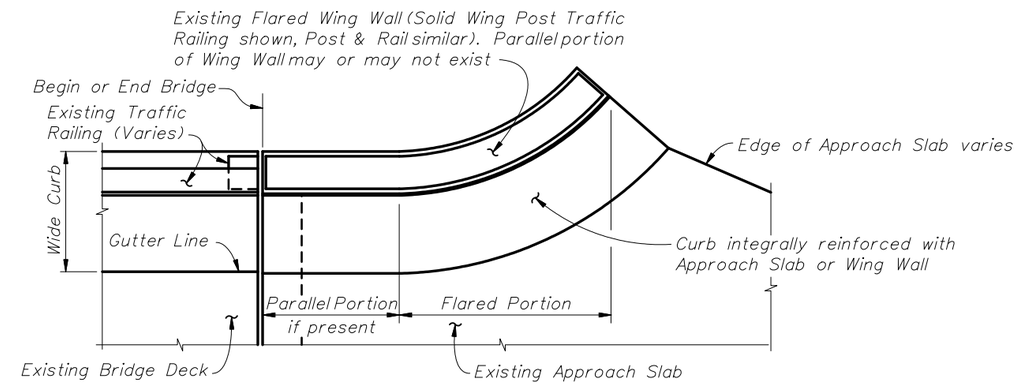

PARTIAL PLAN VIEW OF EXISTING BRIDGE WITH WIDE CURBS, FLARED WING WALLS AND FLARED INTEGRALLY REINFORCED APPROACH SLAB CURBS - USE INDEX NO. 482, SCHEME 3

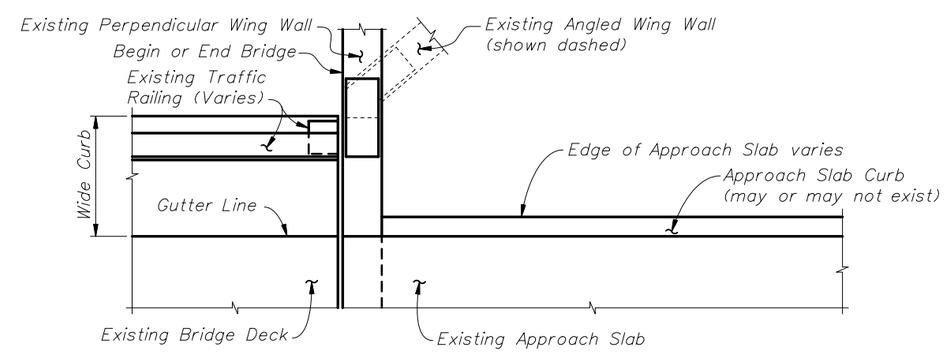

PARTIAL PLAN VIEW OF EXISTING BRIDGE WITH WIDE CURBS AND PERPENDICULAR OR ANGLED WING WALLS - USE INDEX NO. 482, SCHEME 1

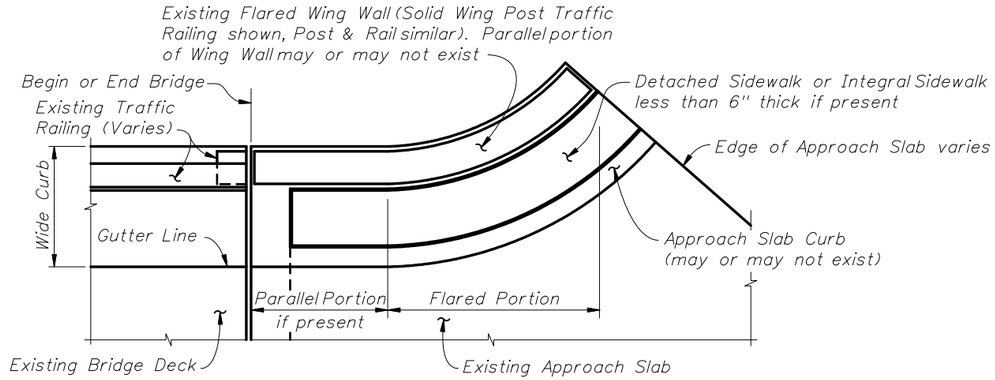

PARTIAL PLAN VIEW OF EXISTING BRIDGE WITH WIDE CURBS, FLARED WING WALLS AND APPROACH SLABS WITH DETACHED SIDEWALKS OR SIDEWALKS LESS THAN 6" THICK - USE INDEX NO. 482, SCHEME 4

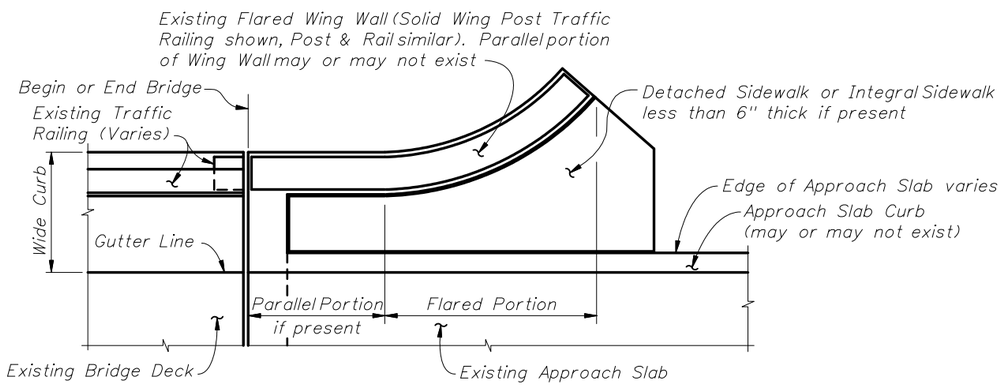

PARTIAL PLAN VIEW OF EXISTING BRIDGE WITH WIDE CURBS, FLARED WING WALLS AND APPROACH SLABS WITH DETACHED SIDEWALKS OR SIDEWALKS LESS THAN 6" THICK - USE INDEX NO. 482, SCHEME 5

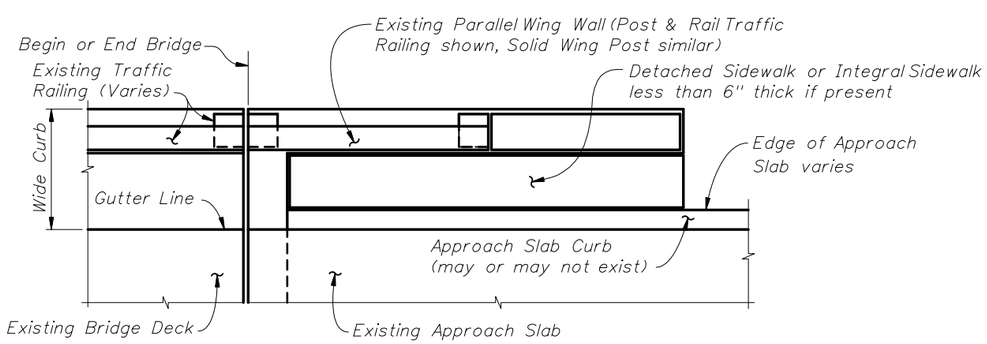

PARTIAL PLAN VIEW OF EXISTING BRIDGE WITH WIDE CURBS, PARALLEL WING WALLS AND APPROACH SLABS WITH DETACHED SIDEWALKS OR SIDEWALKS LESS THAN 6" THICK - USE INDEX NO. 482, SCHEME 5

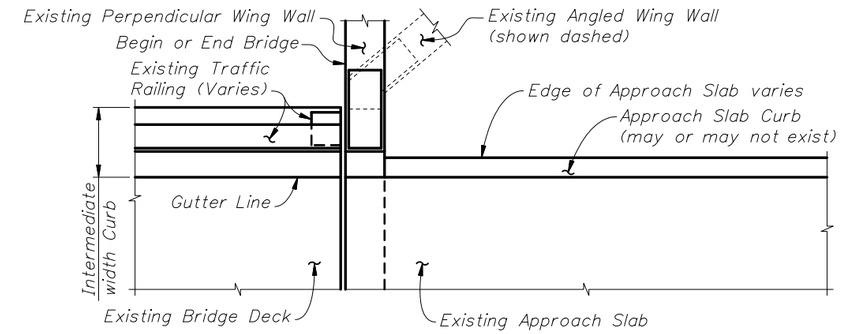

PARTIAL PLAN VIEW OF EXISTING BRIDGE WITH INTERMEDIATE WIDTH CURBS AND PERPENDICULAR OR ANGLED WING WALLS - USE INDEX NO. 483, SCHEME 1

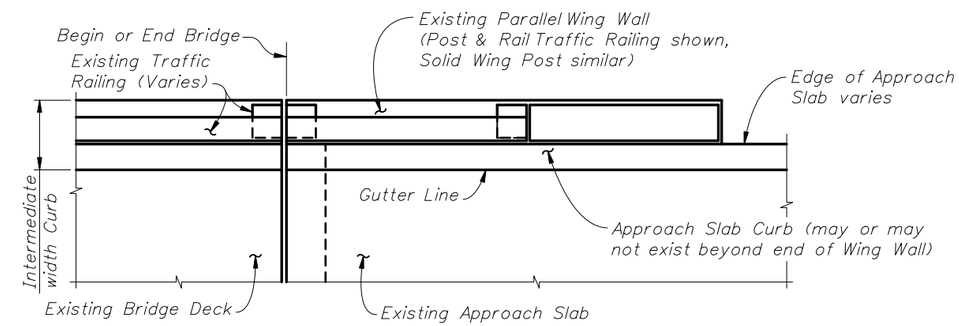

PARTIAL PLAN VIEW OF EXISTING BRIDGE WITH INTERMEDIATE WIDTH CURBS, PARALLEL WING WALLS AND PARALLEL INTEGRAL APPROACH SLAB CURBS - USE INDEX NO. 483, SCHEME 2

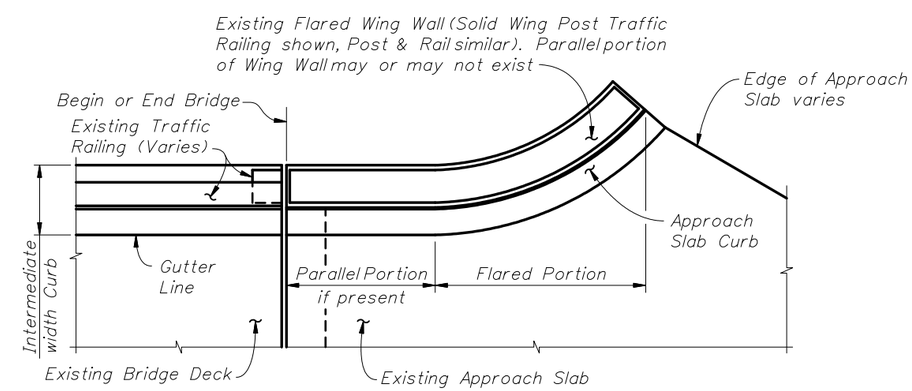

PARTIAL PLAN VIEW OF EXISTING BRIDGE WITH INTERMEDIATE WIDTH CURBS, FLARED WING WALLS AND FLARED INTEGRAL APPROACH SLAB CURBS - USE INDEX NO. 483, SCHEME 3

TRAFFIC RAILING - (VERTICAL FACE RETROFIT) INSTRUCTIONS	SHEET NO. 4 of 4

RETAINING WALL - INSTRUCTIONAL NOTES

The Retaining Wall Standard Drawings consist of Design Standards Index No. 5100 and companion Data Tables, located in the FDOT Structures Sitemenu as MicroStation CADD cells. These Standard Drawings are intended to work in conjunction with each other and the LRFD Retaining Wall Program, developed by the Structures Design Office.

Design assumptions used in the development of the Standard Drawings may be found in 'Retaining Wall Notes' within the Program.
The Standard Drawings and Program are intended for conventional retaining walls only, not abutments.
The EOR should consider the applicability of the following: overall stability, settlement and seismic loading.

The Engineer of Record (EOR) shall be responsible for the Retaining Wall Design in its entirety.
The EOR should complete and/or alter the Standard Drawings to suit the particular design.
The EOR should consider the appropriateness of the use of the Standard Drawings and Program if the particulars of the design conflict significantly with the assumptions used in the development of the Standard Drawings.

The Standard Drawings are intended to work in conjunction with Retaining Wall Control Drawings located within the Plans.
The Control Drawings should define geometrics, locations and other specifics of the Retaining Wall such that when used in conjunction with the Standard Drawings, the Contractor has sufficient information for construction.

Control Drawings typically show:

- Plan View
  - Wall Location
  - Begin/End Wall Stationing and Offset
  - Wall Joint/Expansion Joint Stationing and Offset
  - Offset definition, usually from baseline to front face of wall
  - Step Locations
- Elevation
  - Top/Bottom of Footing Elevation
  - Groundline Elevation
  - Top of Wall Elevation
  - Top of Barrier Elevation

The Program outputs five text files: retwall_line1.txt, retwall_line2.txt, retwall_line3.txt, retwall_line4.txt and retwall_line5.txt .
These five text files correspond sequentially to the five Retaining Wall Data tables contained in the companion CADD cell for Index No. 5100.
The text files can be inserted into the tables by using the 'Include' Key-In Utility in MicroStation at the active points in each table.
Font 169 must be used to align inserted text with table columns.

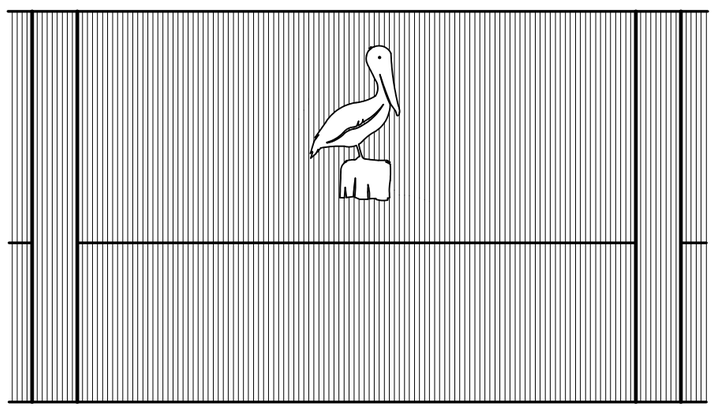

PRECAST CONCRETE SOUND BARRIER WALLS

NOTE: The Pelican graphic indicated above is for demonstration purposes only. The actual graphics shall be detailed in the Plans and shown on the Wall Control Drawings.

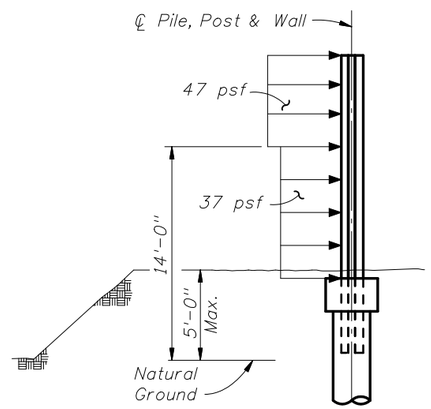

Assumed Wind Load Pressures

Design Criteria: The auger cast pile foundations herein have been designed in accordance with the current AASHTO Guide Specification for Structural Design of Sound Barriers. The design of the panels, posts and piles assumes the following wind pressures:

Posts & Piles: 37 psf – Height Up to 14 ft.
47 psf – Height Over 14 ft. to 29 ft.
Panels: 47 psf

These Standards allow for the wall to be constructed on berm or fill section up to 5'-0" high. See sketch. For projects where walls are constructed on fill sections in excess of 5'-0", project specific designs are required.

In addition to meeting strength requirements, the auger cast pile lengths have been sized to limit top of wall deflections to Wall Height/50, or 5 inches whichever is smaller. Also the head of pile deflection (at ground level) has been limited to 1 inch.

These Precast Sound Barriers Standard Indexes depict 5 Pile/Post Connection Options, based on either 10'-0", or 20'-0" post spacing and are applicable for sites with soil SPT N values between 10 and 40. Reference in the plans Index No. 5202 or Index No. 5203 only when flush or recessed panels are required. Reference all pile/post connection options in Index No. 5205 except that Index No. 5205 "Option D" may be excluded when project aesthetics requirements dictate. Include in the plans the completed Sound Barrier Data Table contained in the companion CADD cell to Index No. 5200 on the FDOT Structures Sitemenu.

Qualified Products List: Manufacturers seeking approval of proprietary sound barrier panels, posts and foundations or systems for inclusion on the Qualified Products List as pre-approved suppliers must submit a QPL Product Evaluation Application along with design documentation, vendor drawings and other information as required in the Sound Barrier QPL Acceptance Criteria showing the proprietary product is designed to meet all specified requirements. Project specific Shop Drawings are required for sound barrier projects in accordance with Specification Section 534.

Proprietary Options: Any of the approved proprietary sound barrier panels, posts and foundations, or proprietary systems (panels and foundations) listed on the Qualified Products List may be allowed as alternates to the Precast Standard, provided the proprietary panel/system option meets the project's aesthetic requirements as depicted on the "PROJECT AESTHETIC REQUIREMENTS" table in the contract plans.
The Designer should list all applicable proprietary panel/post & foundations/systems in Notes 1 and 2 in the companion CADD cell to Index No. 5200 based on project requirements. Refer to the following internet address for the Qualified Product List:

www.dot.state.fl.us/specificationsoffice/qplindex.htm

For project sites where soil N values are less than 10, specific designs are required. If muck/organic soils are encountered, removal or soil improvement methods may be necessary. The limits of muck/organic soils should be shown in the plans with specified removal/improvement methods and method of payment.

For project sites where rock/very strong soils are encountered at shallow depths (N values greater than 40), specific designs are required.

PROJECT EXAMPLE

WALL NO.1:

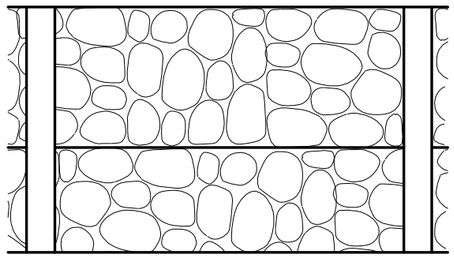

Wall No. 1 is to be a recessed panel type wall consistent with Index No. 5203. The Front Face Panel Texture is to be Ashlar Stone (formed), The Back Face Panel Texture is also to be Ashlar Stone (rolled or pressed). The Front Face of Post Texture is to be smooth. The wall will not have any graphics. The color of the wall is to be Sandalwood Brown. A steel post painted the same color as the panels is acceptable.

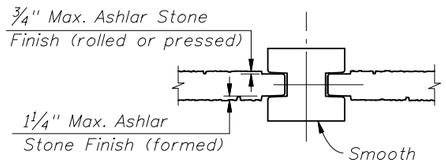

Recessed Panel

WALL NO.2:

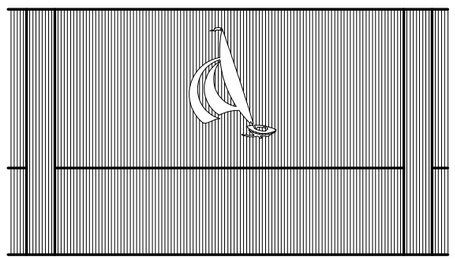

Wall No. 2 is to be a flush panel type wall consistent with Index No. 5202. The Front Face of Panel and Post is to be Trapezoid Vertical Fins w/ Fractured Face (Colorado Drag). The wall has graphics. The color of the wall is to be Sandalwood Brown. A steel post is not acceptable.

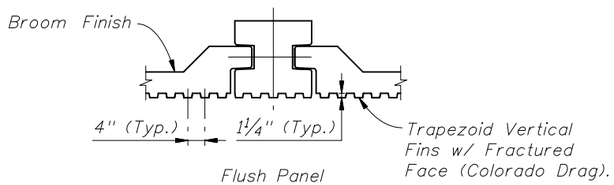

Flush Panel

TABLE OF VARIABLES, CADD CELL 05200 "SOUND BARRIER DATA TABLE"

PROJECT AESTHETIC REQUIREMENTS						
WALL NOS.	REQUIRED: (YES/NO)		REQUIRED TEXTURES (3):			FLUSH PANEL/ RECESSED PANEL/ EITHER
	GRAPHICS (1)	COLORED COATINGS (2)	PANELS:		POSTS:	
			FRONT FACE	BACK FACE (4)	FRONT FACE	
1	NO	YES	Type "B"	Type "B"	Type "A"	RECESSED PANEL
2	YES	YES	Type "H"	N/A	* Type "H"	FLUSH PANEL

* Pile/Post Connection Option D, as detailed on Index No. 5205, Sheet 5 of 7 is not permitted.
(1) See Graphics Elevation Drawings and Control Drawings.
(2) Coat all exposed faces of wall with (sacrificial/non-sacrificial) anti-graffiti coating or Class 5 Applied Finish Coating. The color shall be per Federal Color Chart, Federal Standard No. 595B, Table IV, similar to Color 33446.
(3) See Index No. 5201.
(4) Provide broom finish when flush face panel option is utilized.

INSTRUCTIONAL NOTES

Soil Survey: Maximum preferred boring spacing is 200 ft. and minimum boring depth is 2.0 times the intended wall height for that location or 30'-0" whichever is less. Soil borings shall be considered as structural borings which include SPT performed at a maximum of 3 ft. intervals along the depth of the borings.

Utilities: In some instances, auger cast piles may not be practical due to overhead/ underground utilities. At these locations, spread footings should be considered. The Designer should provide project specific foundation designs as required.

Wall Layout: Wall alignment should be field staked at 20'-0" spacing during the design process in order to locate potential conflicts.

Drainage Holes: The Designer is responsible for locating wall drain holes based on site requirements. Drain holes should be clearly shown in the Control Drawings (including Type). See Index No. 5204 for details.

Fire Access Holes: The Designer is responsible for locating fire access holes based on project requirements. At a minimum, Fire Access Holes should be located at all existing hydrant locations.

Anti-Graffiti Coating: Consideration should be given to coat all portions of the wall accessible to the public with anti-graffiti coating. Wall areas not receiving anti-graffiti coating, shall be coated with a Class 5 Applied Finish in accordance with Section 400. Color of Class 5 Finish should match the anti-graffiti coating system unless specified otherwise in the plans. Tabulate limits of anti-graffiti shown on the "LIMITS OF ANTI-GRAFFITI COATING" Data Table. Either sacrificial or non-sacrificial coating systems may be specified based on District Maintenance recommendations (See Pay Items).

Wall Textures: Textures may be specified for either the back or front face of wall for the recessed panel option. For the flush panel option, textures are limited to the front face only (back face to receive a broom finish).

All textures depicted in Index No. 5201 except Type "H" may be used for either the back face or front face of the wall. The Type "H" Texture is limited to front face only.

Textures on the front face shall be formed. Textures on the back face are to be rolled or pressed, therefore the random pattern types may be more suitable on the back face.

Graphics: Wall graphics may be formed into the wall panels. When required, graphic locations shall be shown in the Control Drawings. Possible graphic options are depicted in the FDOT Structures Sitemenu as Sound Barrier Graphics CADD cells. The Designer may create other graphics as project requirements dictate. General considerations in creating graphics are as follows:

Wall graphics should be fully detailed in the plans and shall be simple. Wall graphics should be as large as possible (approximately 8 ft. in height). Input from local communities should be considered when determining graphic types.

Vehicle Impact Loads: The wall system has been designed for wind loads only, with no provisions for vehicle impact loads. See Plans Preparation Manual - Volume I (current version). Walls should be placed outside clear recovery zone or set back 5'-0" from front face of crash-tested barrier.

Guardrails and delineators may be required at the back face of wall along local streets.

INSTRUCTIONAL NOTES TO DESIGNERS

GENERAL INSTRUCTIONS:

The Standard Drawings for prestressed beams depict details and notes that are fully developed. These drawings are included in the contract documents by reference to the Index No. in the plans. Companion MicroStation CADD cells are located on the FDOT Structures Sitemenu which contain generic details and notes that require the completion of the Table of Beam Variables, the Strand Pattern Details and the Strand Debonding Legend. When completed, the CADD cells shall be included in the plans.

Standard Drawings and properly completed CADD cells provide sufficient information to permit beam fabrication without the necessity of a shop drawings submittal.

The prestressed beams in these Standard Drawings are generally assumed to act as simple spans under both Dead Load and Live Load even where the deck is designed continuous across the support.

When the total initial tensioning (pull) of the fully bonded strands required by design exceeds the values shown on Index No. 20110 the end reinforcement must be redesigned for the increased bursting force. Index No. 20110 and the appropriate Standard Detail Drawing must be modified for inclusion in the contract documents and signed and sealed by the E.O.R.

The drawings shall be matched as follows:

Design Standards Index No.	FDOT Structures Sitemenu CADD Cell	
20110	All Prestressed Beams	Typical Details & Notes
20120	20120 & 20501 *	AASHTO Type II
20130	20130 & 20501 *	AASHTO Type III
20140	20140 & 20501 *	ASSHTO Type IV
20150	20150 & 20501 *	AASHTO Type V
20160	20160 & 20501 *	AASHTO Type VI
20172	20172 & 20501 *	Florida Bulb-T 72
20178	20178 & 20501 *	Florida Bulb -T 78

* Include the "BEARING PLATE TABLE" when Bearing Plates required.

OTHER CONSIDERATIONS:

When the actual number of beams or strand patterns exceed those that can be accommodated on a single plan sheet with the standard "TABLE OF BEAM VARIABLES", use additional sheets. If special conditions require dimensions, details or notes not shown in the standard CADD cells, modifications are permitted, however the "TABLE OF BEAM VARIABLES" should not be modified when utilizing the Standard Drawings.

When required by design, intermediate diaphragms shall be shown on the Framing Plan sheet included with the bridge drawings. Insert locations with respect to the beam ends and beam faces shall be tabulated for each beam. The table shall include length adjustments for beams placed on grade and for elastic and time dependent shortening effects. Type 33 No. 8 reinforcing bars with 3" thread lengths must be shown on the intermediate diaphragm details and included in the rebar list for attachment to the inserts.

If grade exceeds 2% provide Bearing Plate Inserts and Beveled Bearing Plates at each end of the beam as shown on Index No. 20501.

The Angle Ø, for the end of each Beam, shall be rounded to the nearest degree. The shear stirrup spacings V1, V2 & V3 for Bars 4K, should be specified to the nearest inch.

EXAMPLE PROBLEM

The following example shows the data required for completion of a AASHTO Beam Table of Variables CADD cell, in this case an AASHTO Type IV Beam (Index No. 20140).

The example assumes a three span bridge designed for the following conditions:

Live Load: HL-93
No intermediate Diaphragms
Future Wearing Surface: Design includes allowance for 15 PSF.
Stay-in-Place Metal Forms:
Design includes allowance for 20 PSF non-composite dead load over the projected plan area of the forms for the unit weight of metal forms and concrete required to fill the form flutes.

Environment (Superstructure): Moderately Aggressive
Bridge Characteristics:
Length: 276 ft.
Width: 51'-0" (out-to-out)
Clear Roadway: 48 ft.
Superstructure:
Three simple spans of prestressed concrete beams with 8-inch composite deck slab
Span: 87'-0", 102'-0", 87'-0"
Sidewalk: None
Horizontal Alignment: Straight
Vertical Alignment: 0.00% Grade
Skew Angle: 15 degrees (Right)

Beam Design:
Beam: Type IV
Spacing:
8.40', 87' Span (6 Beams)
7.00', 102' Span (7 Beams)
Design Span Length:
84'-6" (Spans 1 & 3)
99'-6" (Span 2)
Composite Dead Load (per girder):
87 ft. Span: 226 PLF
102 ft. Span: 199 PLF
Non-Composite Dead Load (per girder):
87 ft. Span: 1849 PLF
102 ft. Span: 1672 PLF

Bonded Strand Development Multiplier = 1.60
Tension Stress Limits at Release as per Structures Design Guidelines
Live Load Distribution Factors (interior beam):
Shear: 87 ft. Span - 0.877
102 ft. Span - 0.775
Moment: 87 ft. Span - 0.713
102 ft. Span - 0.600

SAMPLE DRAWING USING CADD CELL 20140

AASHTO TYPE IV BEAM - TABLE OF BEAM VARIABLES

Table Date 1-01-06

LOCATION		CONCRETE PROPERTIES			STND.	END	PLAN VIEW CASE		BRG. PLATE MARK ***		END OF BEAM & BEARING DIMENSIONS **						BEAM DIMENSIONS *		REINFORCING STEEL												
SPAN NO.	BEAM NO.	CLASS	STRENGTHS (psi) 28 Day	STRENGTHS (psi) Release	PTRN. TYPE	ELEV. COND.	END 1	END 2	END 1	END 2	ANGLE Ø END 1	ANGLE Ø END 2	DIM P	DIM J	DIM K1	DIM K2	DIM L	DIM R	3D1 B	3D1 Length	3D2 B	3D2 Length	4K NO.	NO. OF SPACES BARS 4K S1	S2	S3	S4	SPACING BARS 4K * V1	V2	V3	V4
1	1 to 6	IV	5500	4500	2	1	2	2	-	-	75°	75°	-	8"	1'-3¼"	1'-2½"	86'-0¼"	1¾"	1'-10¾"	6'-1"	1'-10¾"	6'-1"	159	30	30	-	1	6"	9"	-	9⅛"
2	1 to 7	IV	5500	4500	1	1	2	2	-	-	75°	75°	-	8"	1'-2½"	1'-2½"	101'-0¾"	2¼"	1'-10¾"	6'-1"	1'-10¾"	6'-1"	185	40	33	-	1	6"	9"	-	1'-0⅜"
3	1 to 6	IV	5500	4500	2	1	2	2	-	-	75°	75°	-	8"	1'-2½"	1'-3¼"	86'-0¼"	1¾"	1'-10¾"	6'-1"	1'-10¾"	6'-1"	159	30	30	-	1	6"	9"	-	9⅛"

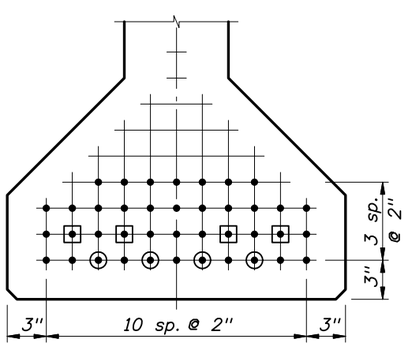

TYPE 1 40 STRANDS

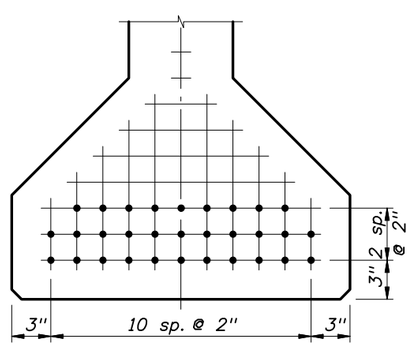

TYPE 2 31 STRANDS

STRAND DESCRIPTION: Use ½" Diameter, Grade 270, Low Relaxation Strands stressed at 31.0 kips each. Area per strand equals 0.153 sq. in.

STRAND PATTERNS

NOTE: Work this sheet with Design Standards Index Nos. 20110 and 20140.

STRAND DEBONDING LEGEND

- • - fully bonded strands.
- ⦿ - strands debonded 20'-0" from end of beam.
- ⊡ - strands debonded 10'-0" from end of beam.

NOTE: On beams with skewed ends the debonded length shall be measured along the debonded strand.

DIMENSION NOTES

* All longitudinal beam dimensions shown on this sheet with a single asterisk (*) are measured along the top of beam at the centerline of beam.

** End of beam bearing dimensions "J" and "K" are measured along the bottom of the beam.

BEARING PLATES

*** Mark indicates beveled bearing plate and embedded bearing plate required. See Index No. 20501 for details.

PRESTRESSED BEAM INSTRUCTIONS

SHEET NO. 1 of 1

INSTRUCTIONAL NOTES TO DESIGNERS

GENERAL INSTRUCTIONS:

The Standard Drawings for Florida U Beams depict details and notes that are fully developed. For beams with skewed end conditions not greater than 15°, these drawings are included in the contract documents by reference to the Index No. in the plans.
For beams with skewed end conditions greater than 15° the EOR shall develop a custom design and details.

Companion MicroStation CADD cells are located on the FDOT Structures Sitemenu which contain generic details and notes that require the completion of the Table of Beam Variables, the Strand Pattern Details and the Strand Debonding Legend. When completed, the CADD cells shall be included in the plans.

Standard Drawings and properly completed CADD cells provide sufficient information to permit beam fabrication without the necessity of a shop drawings submittal.

When the actual number of beams or strand patterns exceed those that can be accommodated on a single plan sheet with the standard "TABLE OF BEAM VARIABLES", use additional sheets. If special conditions require dimensions, details or notes not shown in the standard CADD cells, modifications are permitted, however the "TABLE OF BEAM VARIABLES" should not be modified.

The drawings shall be matched as follows:

Design Standards Index No.	FDOT Structures Sitemenu CADD Cell	
20210	All Prestressed Beams	Typical Details & Notes
20248	20220	Florida U 48 Beam
20254	20220	Florida U 54 Beam
20263	20220	Florida U 63 Beam
20272	20220	Florida U 72 Beam

The Angle Ø, for the end of each Beam, shall be rounded to the nearest degree. The shear stirrup spacings V1 and V2 for Bars 5K should be specified to the nearest inch.

OTHER CONSIDERATIONS:

Figure 1 shows the mandatory strand locations for the bottom flange of the U-Beams.

Figure 2 shows typical Stay-In-Place Metal Form Details.
The EOR shall develop similar details on a project specific basis to be included in the bridge Superstructure Details.

Figure 3 shows the method of Jacking beams for future bearing pad replacement. The EOR shall develop similar details to be included as a separate sheet after the bridge "Superstructure Details". Note that the positioning of jacks needs to take into account pedestal size and other substructure details.

Design a Cast-In-Place thickened Slab Edge Beam to support wheel loads. Generally, the depth of the Edge Beam shall extend from the top of the deck to the bottom face of the top flanges of the Florida U Beams.

EXAMPLE PROBLEM

The following example shows the data required for completion of a U-Beam Table of Variables CADD cell, in this case a Florida U 72 Beam (Index No. 20272).

The example assumes a two span bridge designed for the following conditions:

Live Load: HL-93
Future Wearing Surface: Design includes allowance for 15 PSF.
Stay-in-Place Metal Forms:
Design includes allowance for 20 PSF non-composite dead load over the projected plan area of the forms for the unit weight of metal forms and concrete required to fill the form flutes.

Environment (Superstructure): Moderately Aggressive
Bridge Characteristics:
Length: 249'-4"
Width: 59'-1" (out-to-out)
Clear Roadway: 56'-0"
Superstructure:
Two simple spans of prestressed concrete beams with 8-inch composite deck slab
Span: 124'-8", 124'-8"
Sidewalk: None
Horizontal Alignment: Straight
Vertical Alignment: 0.00% Grade
Skew Angle: 0 degrees

Beam Design:
Beam: Florida U 72 Beam
Spacing: 21'-0"
Design Span Length: 122'-4"
Composite Dead Load (per girder): 603 PLF

Non-Composite Dead Load:
124'-8" Span: 4163 PLF
Diaphragm Dead Load:
End: 8.6 kips Each
Intermediate: 4.3 kips Each
Bonded Strand Development Multiplier = 1.60
Tension Stress Limits at Release as per Structures Design Guidelines
Live Load Distribution Factors (interior beam):
Shear: 1.50
Moment: 1.50

SAMPLE DRAWING USING CADD CELL 20210

FLORIDA U BEAM - TABLE OF BEAM VARIABLES

Table Date 1-01-06

FUB TYPE	LOCATION SPAN NO.	LOCATION BEAM NO.	CONCRETE PROPERTIES CLASS	STRENGTHS (psi) 28 Day	STRENGTHS (psi) Release	STND. PTRN. TYPE	END ELEV. COND.	PLAN VIEW CASE END 1	PLAN VIEW CASE END 2	BRG. PLATE MARK *** END 1	BRG. PLATE MARK *** END 2	END OF BEAM AND BEARING DIMENSIONS ** ANGLE Ø END 1	ANGLE Ø END 2	DIM P	DIM J	DIM K1	DIM K2	BEAM DIMENSIONS * DIM L	DIM R	REINFORCING STEEL 4G NO.	4H NO.	4M NO.	5K NO.	NO. OF SPACES BARS 5K & 4M S1	S2	S3	SPACING BARS 5K & 4M * V1	V2	V3
72	1	1 to 3	VI	8500	6000	1	1	1	1			90°	90°	0"	10½"	1'-2¾"	1'-2"	124'-3½"	2½"	42	84	382	410	30	21	1	9"	1'-0"	1'-1¾"
72	2	1 to 3	VI	8500	6000	1	1	1	1			90°	90°	0"	10½"	1'-2"	1'-2¾"	124'-3½"	2½"	42	84	382	410	30	21	1	9"	1'-0"	1'-1¾"

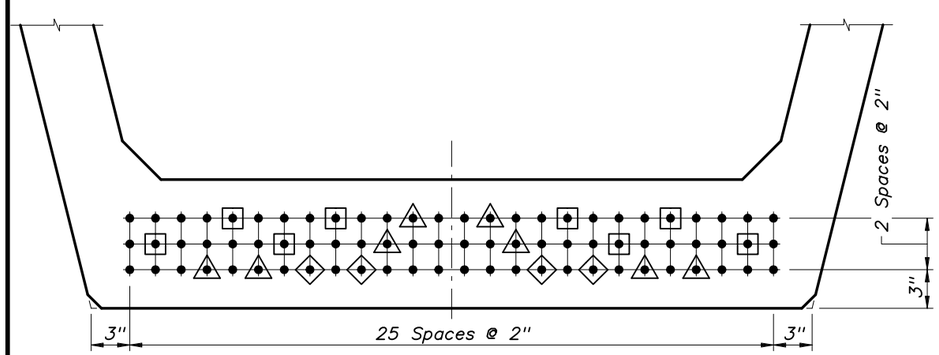

TYPE 1 78 STRANDS

STRAND DESCRIPTION: Use 0.60" Diameter, Grade 270, Low Relaxation Strands stressed at 43.94 kips each. Area per strand equals 0.217 sq. in.

STRAND PATTERN

NOTE:
Work this sheet with Design Standards Index Nos. 20210, 20248, 20254, 20263 and 20272.

DIMENSION NOTES

* All longitudinal beam dimensions shown on this sheet with a single asterisk (*) are measured along the top of beam at the centerline of beam.

** End of beam bearing dimensions "J" and "K" are measured along the bottom of the beam.

BEARING PLATES

*** Mark indicates beveled bearing plate and embedded bearing plate required. See Index No. 20502 for details.

STRAND DEBONDING LEGEND

● - fully bonded strands.
⊡ - strands debonded 21'-0" from end of beam.
△ - strands debonded 24'-0" from end of beam.
◇ - strands debonded 27'-6" from end of beam.

NOTE: On beams with skewed ends the debonded strand length shall be measured along the shielded strand.

FLORIDA U-BEAM INSTRUCTIONS

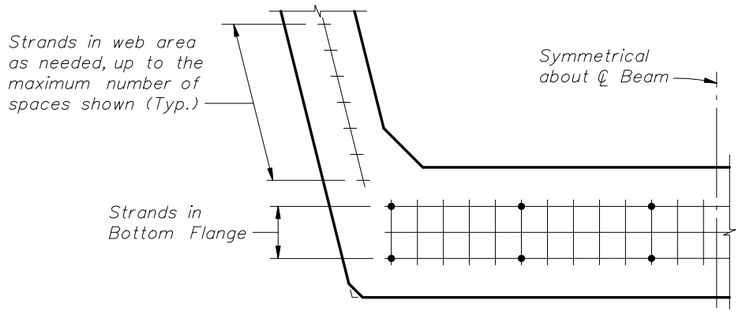

FIGURE 1
(Showing Strand Pattern Only)

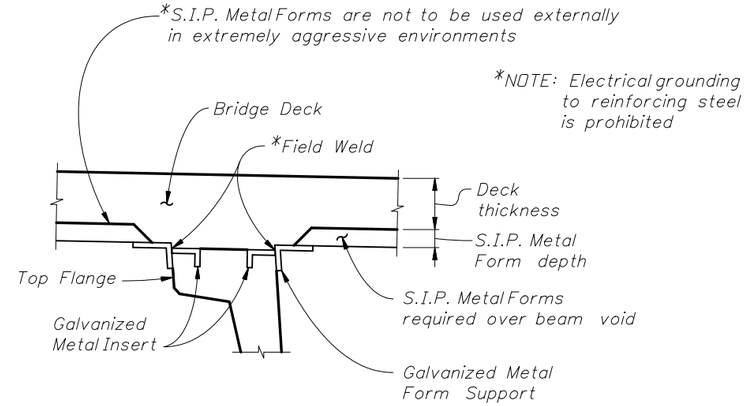

TOP FLANGE DETAIL

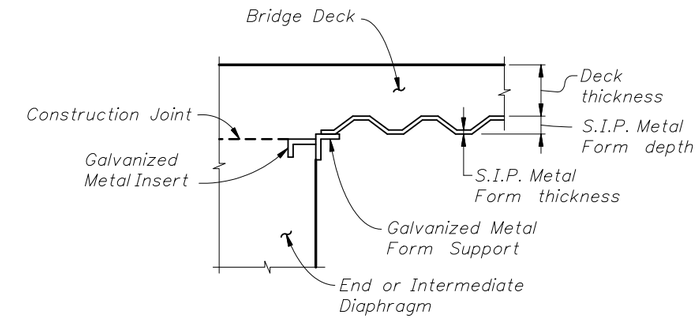

PARTIAL SECTION THRU DIAPHRAGM

FIGURE 2 - STAY-IN-PLACE (S.I.P.) METAL FORM DETAILS

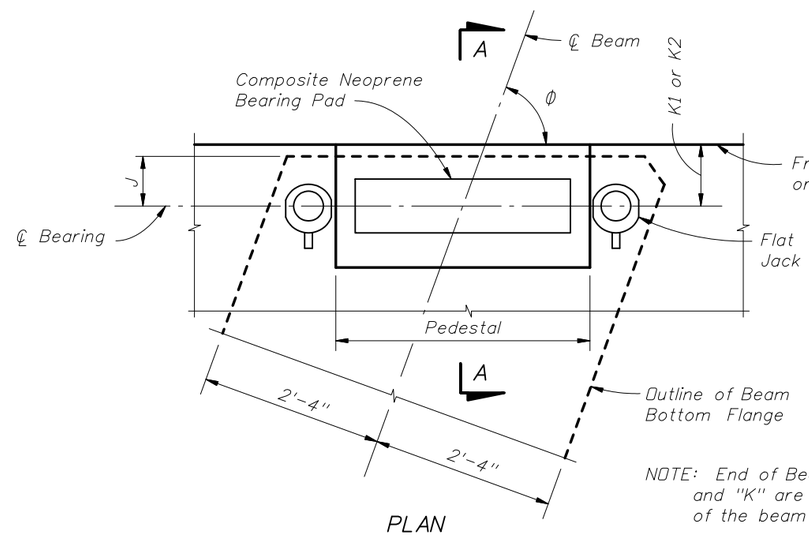

PLAN

NOTE: End of Beam Bearing Dimensions "J" and "K" are measured along the bottom of the beam

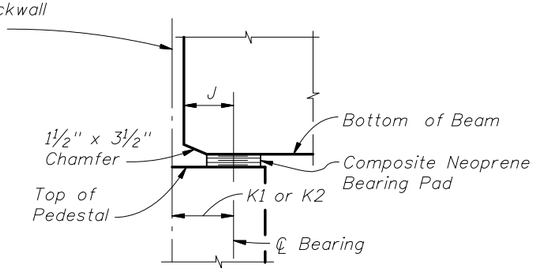

SECTION A-A

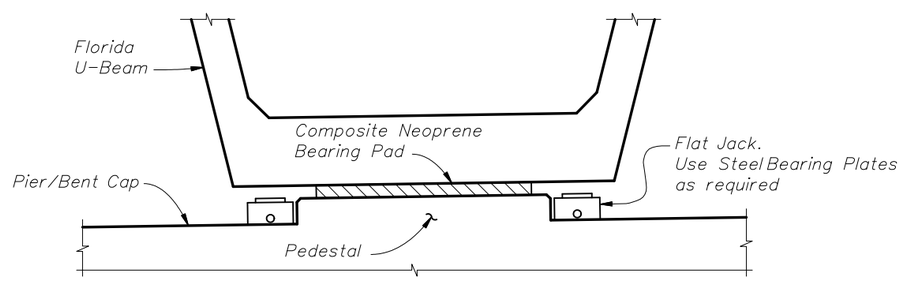

ELEVATION

MAXIMUM SERVICE LOAD PER JACK (kips)		
DEAD LOAD	LIVE LOAD + IMPACT	TOTAL

FUTURE BEARING PAD REPLACEMENT

Details show position of Low-Profile Hydraulic Cylingers (Flat Jacks) for Future Bearing Pad Replacement. Raise all beams at a span end simultaneously (no differential displacement between beams permitted). This includes beams in adjacent span if deck slab is continuous at a pier. Maximum estimated service load per jack, with live load plus impact, is shown in Table.

FIGURE 3 - BEAM BEARING DETAIL

GENERAL INSTRUCTIONS:

Design Standard No. 20500 depicts details and notes for elastomeric bearing pads for prestressed concrete beams with or without skewed end conditions.

Design Standard No. 20501 contains generic details and notes for beveled bearing plates. Completion of the table 'Beveled Bearing Plate B Dimensions' is required.

For beam grades greater than 2%, include a Bearing Plate Table (see FDOT sitemenu) in the plans.

LIMITING PARAMETERS FOR ELASTOMERIC BEARING PADS USED WITH FDOT STANDARD PRESTRESSED CONCRETE BEAMS				
PAD TYPE	BEAM TYPE	MAX. TOTAL SERVICE LOAD REACTION	MAX. SERVICE LIVE LOAD REACTION	MAX. SHEAR DEFLECTION
A	II (AASHTO)	170 kips	65 kips	0.75"
	III (AASHTO)	180 kips	70 kips	
	IV (AASHTO)	235 kips	90 kips	
	V & VI (AASHTO) and FLORIDA BULB-T's	310 kips	120 kips	
B	II (AASHTO)	240 kips	95 kips	1.0"
	III (AASHTO)	310 kips	120 kips	
	IV (AASHTO)	320 kips	125 kips	
	V & VI (AASHTO) and FLORIDA BULB-T's	465 kips	185 kips	

The Service Live Load and Total Service Load Reactions can be determined from the beam design. The Shear Deflection is the product of the coefficient of thermal expansion, one-half the thermal gradient and the length of bridge contributing to movement, plus one-half the beam shrinkage at the bottom of beam. Assume beam shrinkage from day 120 to day 240 (this value can be determined from data in the beam design output).

Standard Elastomeric bearing pads have been designed in accordance with AASHTO LRFD Specifications, Method "B", (Articles 14.7.5.3.2, .3, .4, .6 and .7) with the exception of Article 14.7.5.3.5 Combined Compression and Rotation. For standard AASHTO Girders and Florida Bulb-T's, the FDOT does not require checking for Combined Compression and Rotation.

For design values exceeding the limiting parameters shown on this sheet, the designer must develop custom designs and details. For skew angles greater than 30°, consider round pads using similar elastomer and plate thicknesses shown in Design Standard No. 20501.

EXAMPLES:

The following examples show the information required to determine the correct elastomeric bearing pad type to use:

* EXAMPLE 1

Given Information:
- Superstructure Type - One Simple Span
- Type IV AASHTO Beams 105'-0" long, spaced at 7'-0" centers
- No longitudinal restraints except friction between the pad and the concrete substructure
- Service Live Load Reaction = 89.2 kips
- Total Service (Live Load + Dead Load) Reaction = 186.6 kips
- Coefficient of Thermal Expansion = 0.000006/°F
- Thermal Gradient = 50°F
- Shrinkage at the Bottom of Beam (from day 120 to day 240) = 0.429"
- Shear Deflection = (0.000006/°F x 25°F x 52.5' x 12"/') + 0.429"/2 = 0.309"
- Beam Grade = 2%

Elastomeric Bearing Pad Type Determination:
- Compare the design values to the Limiting Parameters Table, Pad Type A for Type IV AASHTO Beams.

  Limiting Parameters Versus Design Values:
  - Maximum Total Service Reaction of 235 kips versus Design Value of 186.6 kips; therefore, OK
  - Maximum Service Live Load Reaction of 90 kips versus Design Value of 89.2 kips; therefore, OK
  - Maximum Shear Deflection of 0.75" versus Design Value of 0.309"; therefore, OK

Conclusion:
- Use Elastomeric Bearing Pad Type A.
- No beveled plate is required.

* EXAMPLE 2

Given Information:
- Superstructure Type - Four Continuous Spans
- Type IV AASHTO Beams 105'-0" long, spaced at 7'-0" centers
- No longitudinal restraints except friction between the pad and the concrete substructure
- Service Live Load Reaction = 89.2 kips
- Total Service (live load + dead load) Reaction = 186.6 kips
- Coefficient of Thermal Expansion = 0.000006/°F
- Thermal Gradient = 50°F
- Shrinkage at the Bottom of Beam (from day 120 to day 240) = 0.429"
- Shear Deflection = (0.000006/°F x 25°F x 210' x 12"/') + 0.429"/2 = 0.593"
- Beam Grade = 5%

Elastomeric Bearing Pad Type Determination:
- Compare the design values to the Limiting Parameters Table, Pad Type A for Type IV AASHTO Beams.

  Limiting Parameters Versus Design Values:
  - Maximum Total Service Reaction of 235 kips versus Design Value of 186.6 kips; therefore, OK
  - Maximum Service Live Load Reaction of 90 kips versus Design Value of 89.20 kips; therefore, OK
  - Maximum Shear Deflection of 0.75" versus Design Value of 0.593"; therefore, OK

Conclusion:
- Use Elastomeric Bearing Pad Type A. Additionally, complete 'Bearing Plate Table (see FDOT sitemenu) since beam grade exceeds 2%.

* The above examples do not assume any wind or braking loads are applied to the elastomeric bearing pads.

COMPOSITE ELASTOMERIC BEARING PAD INSTRUCTIONS	SHEET NO.
	1 of 1

POST-TENSIONING INSTRUCTIONAL SHEET

PLAN REQUIREMENTS FOR PROJECTS THAT UTILIZE POST-TENSIONING

1. Grouting and Anchor Protection: In addition to providing post tensioning quantity and stressing information on the plans, the designer shall provide general grouting information for each tendon type and anchor protection information for all tendons on the project. See the example post-tensioning schedules shown below for both PT Bar and strand type tendons, respectively. Also refer to the Post-Tensioning Vertical Profiles Index and Post-Tensioning Anchorage Protection Index, Design Standards Index Nos. 21801 and 21802, respectively.
2. The plan details should be consistent with the Post-Tensioning Standards and the Post-Tensioning Specifications (Section 462).
3. Details shown in the Post-Tensioning Anchorage and Grouting Details - Design Standards Index No. 21803 shall be incorporated into the Contract Documents.
4. In cases where the tendon types and anchor protection details are not sufficient for specific project requirements, the designer shall supplement the drawings as necessary. Deviation from Standard Drawings however require the Department's approval.
5. Detail to the following FDOT Standard tendon anchorage capacities: 4k6, 7k6, 12k6, 15k6, 19k6, 27k6.
6. Any deviations from these standards shall be approved by the Department.

POST-TENSIONING BAR DATA TABLE

BAR DESIGNATION	NO. REQUIRED	BAR SIZE	BAR LENGTH (ft-in)	BAR WEIGHT (lbs)	TOTAL WEIGHT (lbs)	STRESSING FORCE/BAR (kips)	LIVE END FORCE AFTER ANCHOR SET (kips)	DEAD END FORCE AFTER ANCHOR SET (kips)	STRESSING END	ELONGATION (in)	*TENDON PROFILE	**ANCHOR PROTECTION TYPE	
												UP STA.	DOWN STA.
T1	8	1⅜" Ø	17-0	56.2	449.6	170.6	165	165	UPSTATION	⅝	12	5	7

* See Post-Tensioning Vertical Profiles, Design Standards Index No. 21801.
** See Post-Tensioning Anchorage Protection, Design Standards Index No. 21802. For transverse tendons, up station denotes left anchor, down station denotes right anchor (looking up station). For vertical bars, up station denotes top anchor, down station denotes bottom anchor.

POST-TENSIONING TENDON DATA TABLE

TENDON DESIGNATION	NO. REQUIRED	TENDON SIZE	TENDON LENGTH (ft-in)	TENDON WEIGHT (lbs)	TOTAL WEIGHT (lbs)	STRESSING FORCE / TENDON (kips)	LIVE END FORCE AFTER ANCHOR SET (kips)	DEAD END FORCE AFTER ANCHOR SET (kips)	STRESSING END	ELONGATION (in)		*TENDON PROFILE	**ANCHOR PROTECTION TYPE	
										BEFORE ANCHOR SET	AFTER ANCHOR SET		UP STA.	DOWN STA.
2C1	4	12X0.6" Ø	30-0	466.2	1864.8	562	492	457	UPSTATION	2.71	2.47	9	1A	3

* See Post-Tensioning Vertical Profiles, Design Standards Index No. 21801.
** See Post-Tensioning Anchorage Protection, Design Standards Index No. 21802. For transverse tendons, up station denotes left anchor, down station denotes right anchor (looking up station). For vertical tendons, up station denotes top anchor, down station denotes bottom anchor.

SHOP DRAWING REVIEW AND REVIEW OF CONTRACTOR'S GROUTING PLAN

1. Shop Drawings
   a. Shop Drawings shall conform to the requirements of Section 462 of the Specifications.
      A partial list of essential elements are as follows:
      i. Post-tensioning systems to be used.
      ii. Layout showing locations and geometry.
      iii. Duct spacing and supports.
      iv. Inlet and outlet locations.
      v. Stressing sequence.
      vi. Friction.
      vii. Inspection details.
   b. Verify that PT systems are consistent with Contractor's Grouting Plan.
   c. Layout for post-tensioning systems shall at a minimum include the following:
      i. Anchor access after grouting for inspection.
      ii. Anchor access for vacuum grouting of voids.
      iii. Injection ports at all low point and at all anchor locations consistent with Indices.
      iv. Grout outlets and inspection access at all high points and at all locations consistent with Indices.
      v. All individual concrete element shop drawings shall clearly cross-reference the necessary PT systems components by type and name.

2. Contractor's Grouting Plan: The Engineer of Record should work with the Project Engineer and review the Contractor's Grouting Plan submittal along with construction personnel. The Contractor's Grouting Plan shall include, but is not limited to the following items for each tendon on the project.
   a. Type, quantity, and brand of materials used in grouting including all certifications required.
   b. Type of equipment furnished, including capacity in relation to demand and working condition, as well as back-up equipment and spare parts.
   c. General grouting procedure.
   d. Duct pressure test and repair procedures.
   e. Method to be used to control the rate of flow within ducts.
   f. Theoretical grout volume calculations.
   g. Types and locations of inlet and outlet pipes consistent with plan requirements.
   h. Duct cleaning methods prior to grouting.
   i. Mixing and pumping procedures.
   j. Direction of grouting.
   k. Grouting process for each tendon on project including injection locations (low points), vent closure sequence, and time delayed grout phasing.
   l. Sequence of use of the inlet and outlet pipes.
   m. Procedures for handling blockages.
   n. Procedures for possible post grouting repair.

NOTES: Tendon Profiles - Index No. 21801

1. Top slab transverse tendons with Deviation "X" less than or equal to 20" shall be treated as a Profile 12 tendon for grouting procedures (see sketch).
2. Top slab cantilever tendons with Deviation "X" less than or equal to 20" shall be treated as a Profile 12 tendon for grouting procedures (see sketch).
3. Bottom slab continuity tendons with Deviation "X" less than or equal to 20" shall be treated as a Profile 12 tendon for grouting procedures (see sketch).

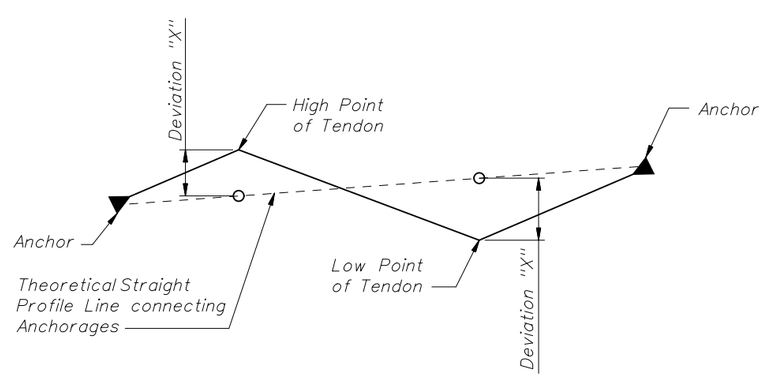

TENDON PROFILE DEVIATION

INSTRUCTIONAL NOTES FOR POST-TENSIONING

SHEET NO.
1 of 1