INDEX OF SHEETS

S-1 Preferred details index of sheets
S-2 General notes structural steel
S-3 Typical cross frame details straight plate girder bridges
S-4 Typical cross frame details curved plate girder bridges
S-5 Typical flange details
S-6 Phased construction steel detail framing plan details-large skews
S-7 Bearing/jacking stiffener details
S-8 End cross frame/diaphragm connection details
S-9 Basic geometry-steel box
S-10 Box girder camber diagram
S-11 Typical cross frame details box girder bridges
S-12 Pier diaphragms-box bridges
S-13 Steel box screening
S-14 Stiffener details
S-15 Steel shop drawing review guidelines (1 of 2)
S-16 Steel shop drawing review guidelines (2 of 2)
S-17 Anchor bolt details
S-18 Example of integral pier caps
S-19 Example of integral pier cap steel box
S-20 Example of integral pier cap steel girder
S-21 Example of integral cap concrete
S-22 Example of framing details-tapered ramp
S-23 Example of framing details gore area
S-24 Access opening details
S-25 Stay-in-place metal forms for steel girders
S-26 Stay-in-place metal forms for steel box girders
S-27 Bearing replacement-steel girders
S-28 Weathering steel details
S-29 Drilled shaft reinforcing details
S-30 Footing details
S-31 Curved hammerhead piers - varying cross slope (Boxes or I-Girders)
S-32 Hammerhead piers - varying cross slope (Boxes or I-Girders)
S-33 Hammerhead pier details
S-34 Pier aesthetics (Sheet 1 of 2)
S-35 Pier aesthetics (Sheet 2 of 2)
S-36 Pier reinforcing details
S-37 Temporary sheet pile walls phased construction at bridge ends
S-38 Sheet pile wall with C.I.P. facing
S-39 ADA requirements (1 of 5) - Cover plate at expansion joints within limits of sidewalk
S-40 ADA requirements (2 of 5) - Cover plate at expansion joints within limits of sidewalk
S-41 ADA requirements (3 of 5) - ADA ramps for bridge grades greater than 5%
S-42 ADA requirements (4 of 5) - ADA ramps for bridge grades greater than 5%
S-43 ADA requirements (5 of 5) - Bridges with cross slope greater than 2%

ACKNOWLEDGEMENTS:

The steel details shown herein are a compilation of examples taken from actual Florida projects as well as industry preferences as published by the National Steel Bridge Alliance. The National Steel Bridge Alliance is made up of designers, detailers, fabricators, contractors and owners. A special thanks is extended to the Florida consultants and the National Steel Bridge Alliance members and cosponsors whose work contributed greatly to the details shown herein.

PROJECT NAME: PREFERRED DETAILS INDEX OF SHEETS

SHEET NO. S-1

2/13/2007 3:46:10 PM $I_USTN_MACHINES\projects\structures_manual\preferred_detail\notes.dgn

STRUCTURAL STEEL:

All structural steel shall be in accordance with ASTM A709, Grade 50, except that stiffeners, internal and external cross frames and lateral bracing shall be grade 36 unless shown otherwise.

STAY -IN- PLACE METAL FORMS:

Design includes allowance for 20 lb/sq. ft. over the projected plan area of the metal forms for the unit weight of metal forms and concrete required to fill the form flutes. Stay-in-place metal forms to be detailed to clear top lateral bracing of box girder.

CHARPY V-NOTCH:

All ASTM A709 structural steel as designated on the plans shall receive Charpy V-Notch testing in accordance with ASTM A709:

a. Redundant members, as designated on the plans, shall be tested in accordance with ASTM A709, Table 9.

b. Non-redundant members, as designated on the plans, shall be tested in accordance with ASTM A709, Table 10.

All other structural steel that are main load carrying components subject to tensile stress shall meet the Charpy V-Notch test requirements specified in Section 962, of FDOT Standard Specifications.

STEEL FABRICATION:

Structural steel for girders and girder framing, including box girders, diaphragms, cross bracing, etc., shall be ASTM A709. Fabrication shall be performed in accordance with the current applicable edition of the ANSI/AASHTO/AWS D1.5 Bridge Welding Code. Fabricators of structural steel girders and girder framing shall have the AISC Quality Certification for Major Steel Bridges. The fabricator shall also have the AISC Fracture Critical Members endorsement.

WELDING:

1. Welding details and the welding operations shall be in accordance with the current edition of the ANSI/AASHTO/AWS D1.5 Bridge Welding Code. Welding procedures shall be submitted and approved prior to welding on project. Welds requiring non-destructive testing shall be radiographically inspected, except where the geometry of the region of the weld will not permit satisfactory information to be secured for verification of the weld quality. When such geometrical conditions exist, other inspection procedures or combinations of procedures such as Ultrasonic Inspection, Dye Penetrant Inspection and/or Magnetic Particle Inspection, shall be used. Non-destructive Testing shall be performed as required by the current edition of the ANSI/AASHTO/AWS D1.5 Bridge Welding Code.

2. Field or shop welding to any Structural Steel for the purpose of attaching erection hardware, or for anchoring conduits for box lighting shall not be permitted. Proposed method of anchoring conduits/boxes for box lighting shall be formally submitted to the Engineer for approval. Shear Connector Installation is governed by OSHA Steel Erection Rule.

3. The following members are classified as ancillary members in accordance with the current edition of the ANSI/AWS D1.5 Bridge Welding Code:

a. Expansion Joint Welds

b. Drainage System Welds

FRACTURE CRITICAL MEMBERS:

See framing plans for designation of Fracture Critical Members. Structural components designated on the plans or in the special provisions as "Fracture Critical" shall conform to the provisions of Chapter 12 of the current ANSI/AASHTO/AWS D1.5 Bridge Welding Code.

FIELD CONNECTIONS:

All field connections shall be made with 7/8" diameter high strength slip critical type bolts in accordance with ASTM A325 unless otherwise noted.

PAINTING:

All structural steel shall be painted in accordance with Sections 560 and 975 of the specifications.

[Use one or more of the following notes]:

[1. Inorganic Topcoat System]
Paint all structural steel with an inorganic topcoat system consisting of a zinc based primer and an inorganic topcoat. The color of the finish coat shall be light gray, similar to Federal Standard No. 595B, Color No. 36622.

[2. High Performance Topcoat System]
Paint all structural steel with a high performance topcoat system. The color of the finish coat shall conform to Federal Standard No. 595B, Color No. XXXXX.

[3. Combination Inorganic and High Performance Topcoat System]
Paint fascia girders with a high performance topcoat system. The color of the finish coat shall conform to Federal Standard No. 595B, Color No. XXXXX.
Paint remainder of structural steel with a compatible inorganic topcoat system consisting of a zinc based primer and an inorganic topcoat. The color of the inorganic topcoat finish coat shall be light gray, similar to Federal Standard No. 595B, Color No. 36622.

[4. For the Inside of Steel Box Girders]
Paint the inside surface of steel box girders with one shop applied coat of approved primer and a compatible finish coat pigmented to Federal Standard 595B, Color No. 37925 (white). Any other color used for the interior finish coat must be pre-approved by the District Structures Maintenance Engineer. The finish coat of the interior surface is not required to be UV resistant and does not have to be the same product as the finish coat of the exterior surface of the box girder.

LADDERS AND PLATFORMS:

Structural steel for ladders and platforms shall conform with ASTM A36 and shall be hot-dip galvanized in accordance with ASTM A123. Welding shall conform to ANSI/AWS D1.1

UTILITIES:

The utilities including under deck lighting shown in the bridge plans are at approximate locations. For additional information refer to the utilities plans.

$$$$$$$SYTIME$$$$$$$$TIME$ $USERNAME$ $$$$$$$DGNSPECIFICATION$$$$$$$

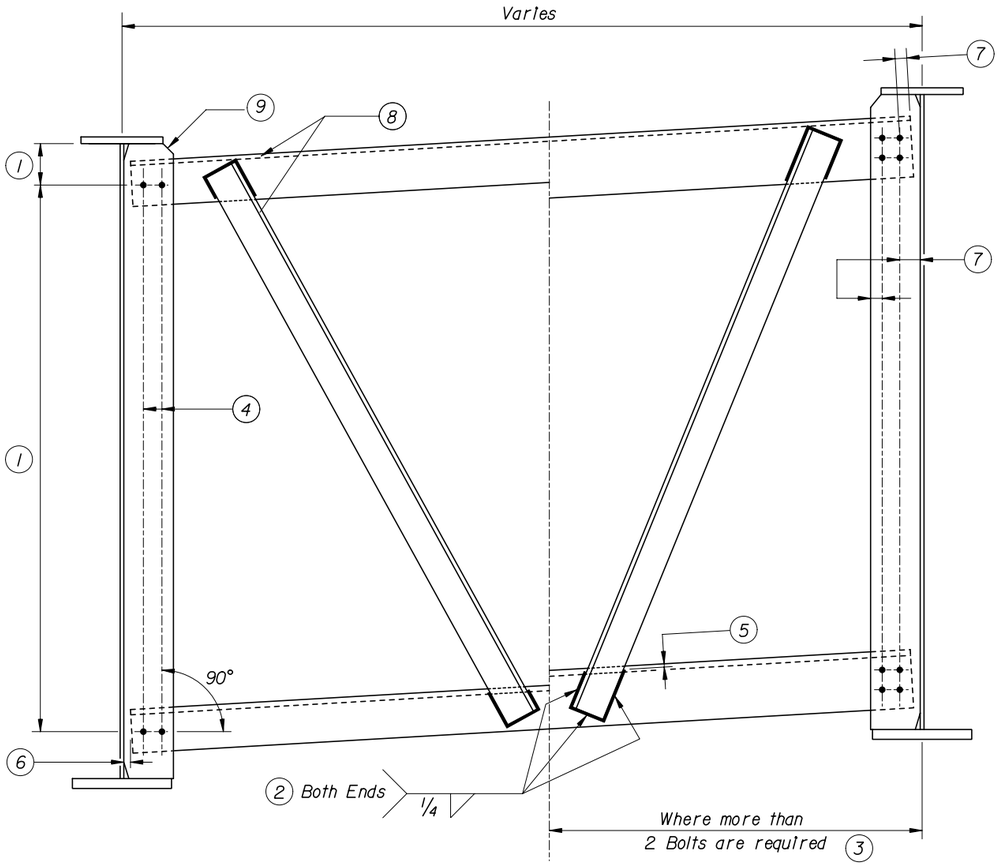

PREFERRED INTERMEDIATE CROSSFRAME
STRAIGHT BRIDGES

TYPICAL INTERMEDIATE CROSSFRAME DETAILS - STRAIGHT BRIDGES
USE K TYPE FRAMING WHEREVER POSSIBLE

This Type of Crossframe Requires Only 4 Components.

1. Keep these dimensions the same and slope the crossframe members.
2. Avoid all around welds. Keep all welding on one side.
3. Increase size of the members as required.
4. Permit the use of oversize holes for crossframe connections.
5. Terminate welds 1/2" short of edge.
6. Provide 3/4" minimum clearance from edge of member to edge of fillet weld.
7. Provide preferred minimum edge/end distances, e.g.: 1 3/4" for 7/8" dia. bolts.
8. Orient members such that flange is on the top to minimize collecting debris and moisture.
9. Show clipping of stiffener as "optional". Unclipped stiffener may conflict with deck forming system.

DETAIL NAME: TYPICAL CROSSFRAME DETAILS
STRAIGHT PLATE GIRDER BRIDGES

SHEET NO. S-3

1/27/2005 1:08:40 PM $(_USTN_MACHINE)Computer_support\StructuresSoftware\StructuresManual\2005 Jan\Graphics\PreferredDetailsDGNs\crossframe2.dgn

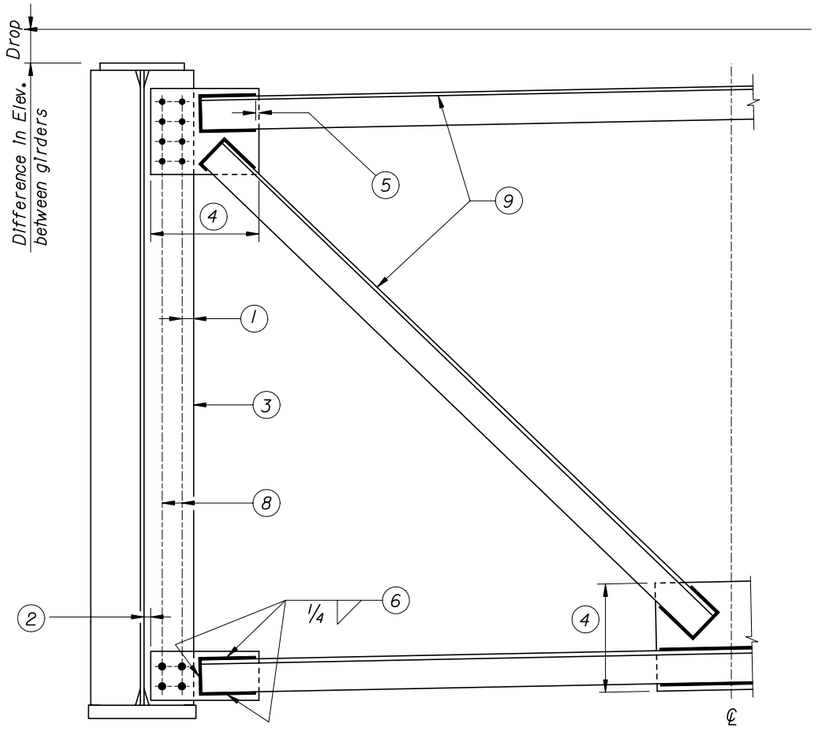

PREFERRED INTERMEDIATE CROSSFRAME - CURVED BRIDGES
USE K TYPE CROSSFRAMES WHEREVER POSSIBLE

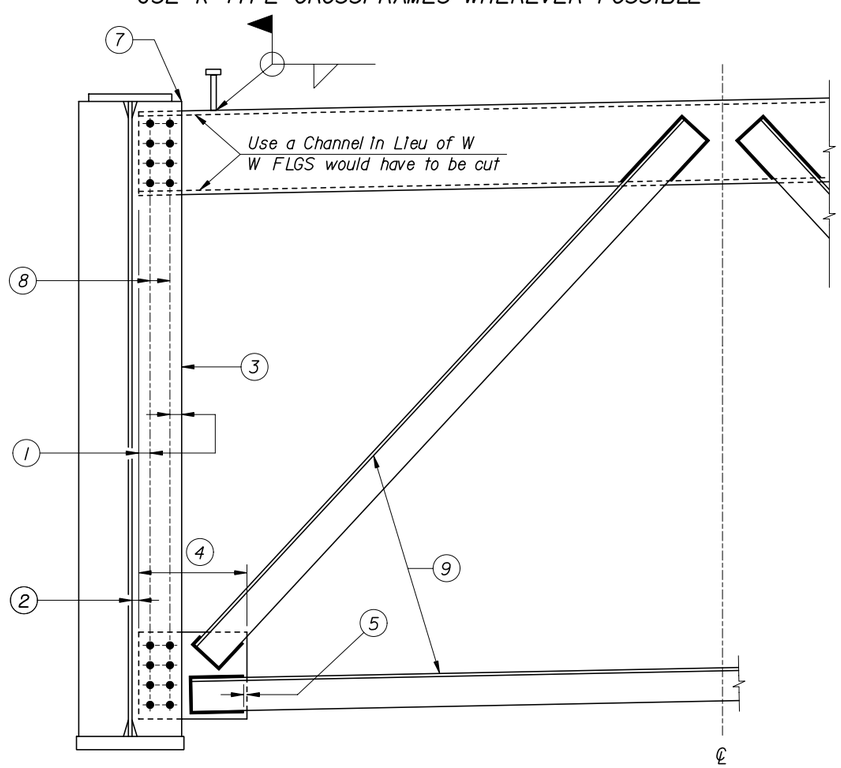

PREFERRED END TYPE CROSSFRAME STRAIGHT & CURVED BRIDGES

TYPICAL INTERMEDIATE AND END CROSSFRAME DETAILS - CURVED BRIDGES

1. Provide preferred minimum edge/end distances, e.g.: 1 3/4" for 7/8" dia. bolts.
2. Provide 3/4" minimum clearance from edge of gusset plate to edge of fillet weld.
3. Include allowances for Notes 1 & 2 in determining stiffener width. Normally a 7 1/2" wide stiffener is required for the connection shown
4. Keep gusset plates rectangular.
5. Terminate welds 1/2" short of edge.
6. Avoid all around welds. Keep all welding on one side.
7. Avoid clips on stiffener. Lower channel to avoid coping.
8. Permit the use of oversized holes for crossframe connections.
9. Orient members such that flange is on the top to minimize collecting debris and moisture.

ADVANTAGES

- All stiffeners would have the same layout and the same mark.
- No layouts are required since connection plates are rectangular.
- Weight of material similar since angles are cut back.
- All angles can be cut without any layouts.
- Erection is much faster, due to fewer erection pieces since frames are jigged, change of field misfits are minimized.
- All plates can be stack drilled or multiple punched, since the hole patterns are identical.
- Changes in the geometry of the frame can easily be accommodated by the moving one side of the jig for differences in the drop.
- All welding is done from near side, therefore assembly does not have to be turned over.

GENERAL PHILOSOPHY: CROSSFRAMES FOR PLATE GIRDER BRIDGES

Fabricators unanimously prefer single angle (or when necessary single member i.e. WTs) bracing. The use of double angles should be avoided as they are expensive to fabricate and painting the backs of the angles creates many unnecessary problems. They prefer crossframes that can be welded from one side only. Configuration of crossframes should be such that there are as many identical frames as possible. Differences in elevations should be accounted for in the crossframes not the connection plates. Configuring the crossframes as parallelograms instead of rectangles will in many instances increase the number of identical crossframes.

DETAIL NAME:	SHEET NO.
TYPICAL CROSSFRAME DETAILS CURVED PLATE GIRDER BRIDGES	S-4

1/27/2005 1:07:39 PM $(_USTN_MACHINE)Computer_support\StructuresSoftware\StructuresManual\2005 Jan\Graphics\PreferredDetailsDGNs\crossframe.dgn

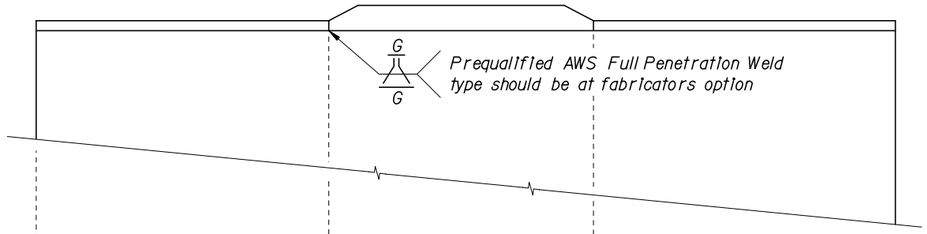

ELEVATION VIEW
TYPICAL FIELD SECTION

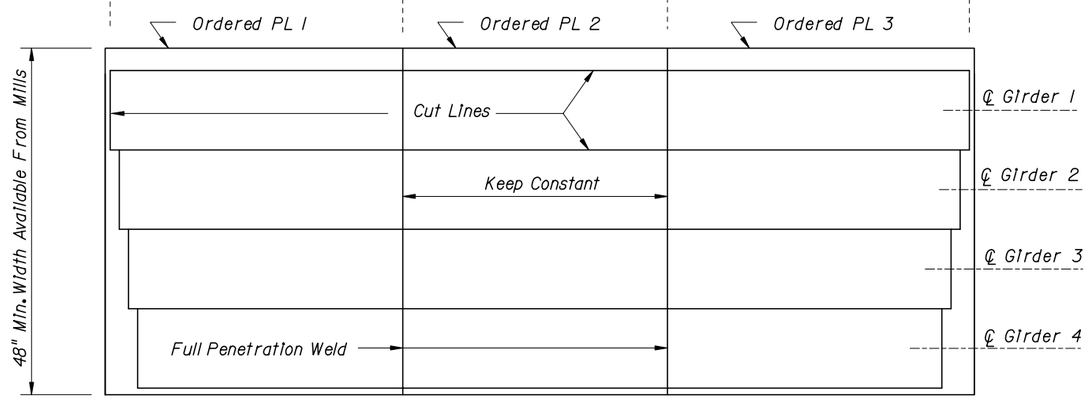

PLAN VIEW
SLABBING AND STRIPPING OPERATION

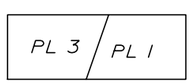

WIDE PLATE
CUTTING DIAGRAM

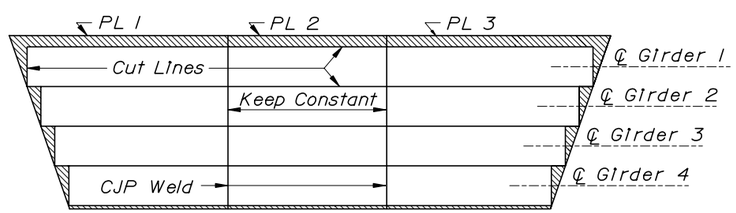

SKEWED BRIDGE CASE

LEGEND:

CJP= Complete Joint
Penetration
Groove Weld

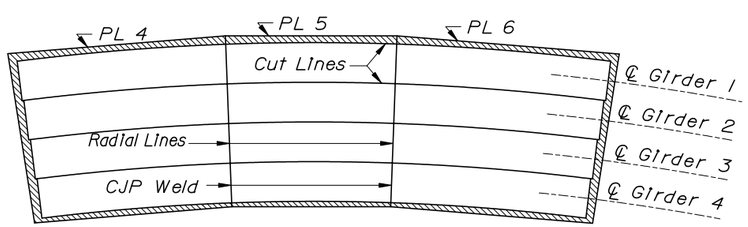

CURVED GIRDER CASE

TYPICAL FLANGE DETAILS

Detailing should be consistent with fabrication practices. In the case of girder flange fabrication, Slabbing and Stripping is usually utilized for both curved and straight bridges. See sketches and description on the left. Girder detailing should be consistent with this fabrication approach whenever possible. In general, the following detailing practices should be followed:

- Avoid varying flange widths within a field section. Vary flange thicknesses.
- Keep the flange plates of adjacent girders the same thickness where possible.
- Keep the length of the center section within a field piece constant for all straight girders.
- In general, the number of flange splices within a field section should never be greater than two. It is more economical to extend a thicker plate in many instances because of the labor cost involved in making a splice.
  Rule of thumb: Change flange thickness and add shop weld splice only when savings in weight exceeds 1200 to 1400 pounds.
- Size plates based on the rolled sizes available from the mills.
- For curved girder flanges that are to be cut curved, nesting of like sized plates are particularly important to minimize waste.
- Keep the number of different plate thicknesses reasonable for the size of the project. Avoid sizing flange thicknesses in 1/8" thicknesses.

DESCRIPTION OF SLABBING AND STRIPPING PROCESS

The ordered plate ends are prepared and then welded together, as shown. The individual flange plate assemblies are then flame cut to their finished widths by multiple torches. Non-destructive testing is performed prior to the flange plate assemblies being welded to the web plates.

DETAIL NAME: TYPICAL FLANGE DETAILS

SHEET NO. S-5

1/27/2005 1:12:34 PM I_USTN_MACRO 2005 Computer_support\StructuresSoftware\StructuresManual\2005 JanGraphics\PreferredDetailsDGNs\flange.dgn

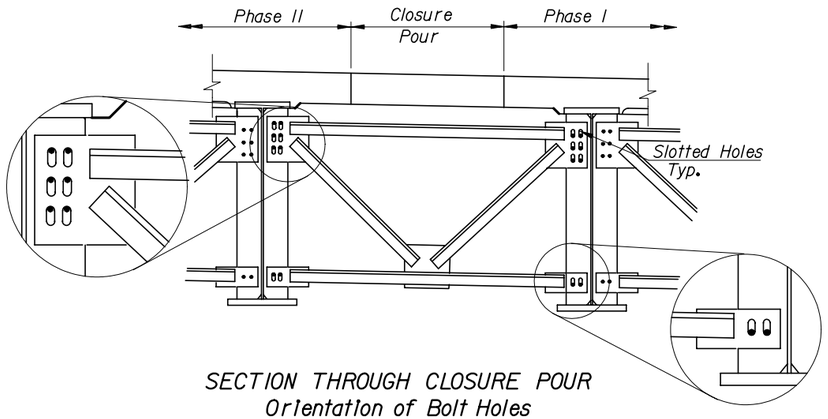

SECTION THROUGH CLOSURE POUR
Orientation of Bolt Holes
Before Phase II Slab Is Cast

PHASED CONSTRUCTION STEEL DETAIL

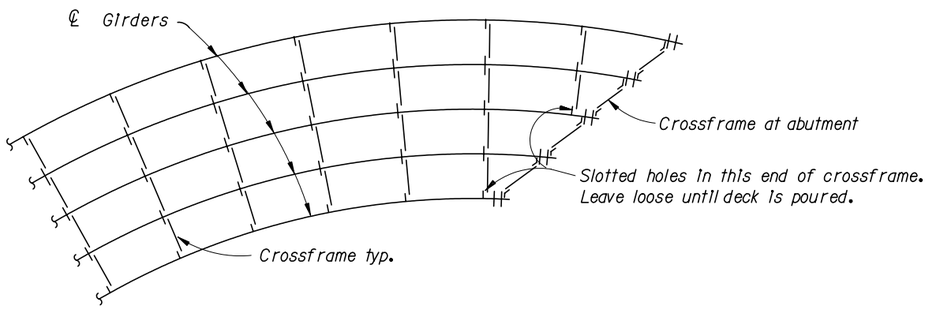

PLAN VIEW - FRAMING PLAN

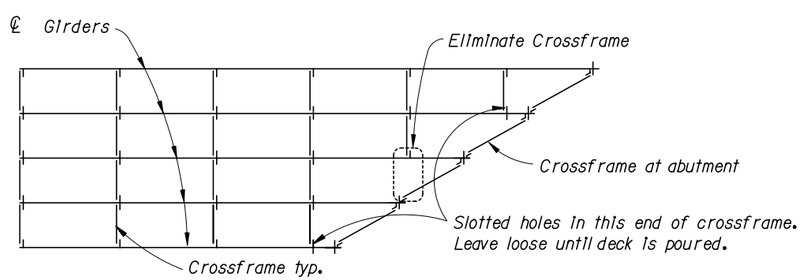

PLAN VIEW - FRAMING PLAN

FRAMING PLAN DETAIL - LARGE SKEWS

PHASED CONSTRUCTION STEEL DETAIL

Differential dead load deflections normally necessitate the need for a longitudinal closure pours on steel bridges built in phases. Deck overhangs are recommended in the phased pours to reduce girder rotations. The deck closure pour width should be sized for deck reinforcement splice requirements. It is also recommended that the holes in the closure pour crossframes be slotted to facilitate differential dead load deflections and fit-up

FRAMING PLAN DETAILS - LARGE SKEWS

The effects of differential deflections across intermediate crossframes near the bearing locations need to be considered for steel bridges with large skews. Differential deflections across crossframes near bearing locations can result in bearing seat rotations and end unit distortions. In the case of large skewed curved bridges, uplift can result. Intermediate crossframes should be eliminated or moved away from bearing points were possible or should be slotted to accommodate differential DL deflections.

GENERAL PHILOSOPHY: FRAMING PLANS FOR PLATE GIRDERS

It is normally desirable to space girders equally and to detail all intermediate crossfarmes normal to girders. Staggered crossframes are not recommended. A grid analysis is required for all skewed and curved girders to establish both loadings and displacements for girders and crossframes. Crossframes should be designed for the additional loads induced by differential deflections that may occur between girders. It is assumed that the girders are to be detailed in the shop drawings to "fit in the full dead load condition".

DETAIL NAME: PHASED CONSTRUCTION STEEL DETAIL
FRAMING PLAN DETAILS - LARGE SKEWS

SHEET NO. S-6

1/27/2005 1:41:22 PM $(_USTN_MACHINE)\computer_support\StructuresSoftware\StructuresManual\2005 Jan\Graphics\PreferredDetailsDGNs\steel_detail2.dgn

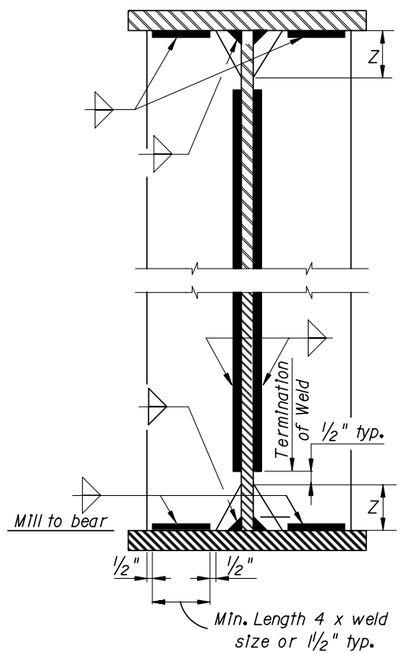

BEARING/JACKING STIFFENER

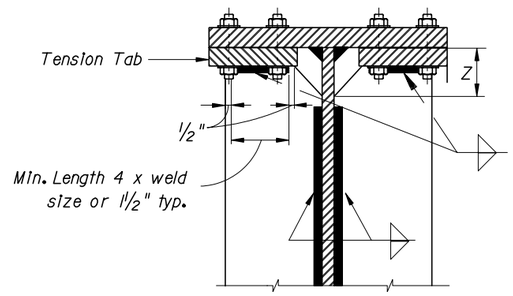

TENSION TAB

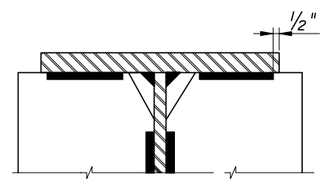

CLIP PLATE DETAIL

$4t_W \leq Z \leq 6t_W$

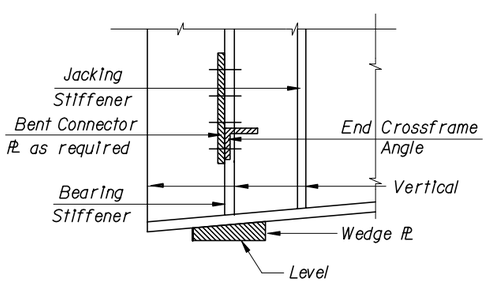

ELEVATION VIEW
AT END BENT
OR EXP. JT.

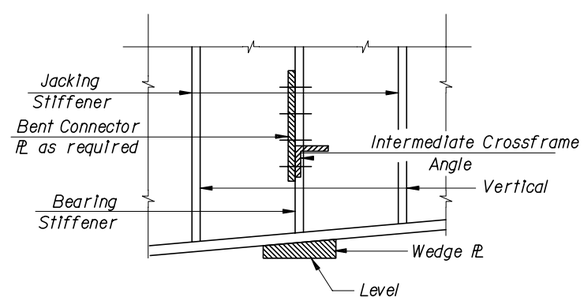

ELEVATION VIEW
AT INTERIOR PIER

BEARING AND JACKING STIFFENER DETAILS

Bearing and jacking stiffeners should be detailed normal to girder webs. On skewed bridges, end diaphragms should be attached to normal stiffeners using bent connector plates.

Girder end cuts, bearing and jacking stiffeners should be detailed to be vertical in the final girder position.

Provide sufficient space between the end diaphragms and back wall to facilitate fit up.

Bearing and jacking stiffener connection to bottom flange should be detailed as a mill to bear surfaces with a fillet weld.

For bearing and jacking stiffeners, the top flange connection should be a fillet weld except as follows:

- When bearing and jacking stiffeners connect to diaphragms, a tension tab should be utilized when a direct welded connection does not meet fatigue requirements.

Clear spacing between stiffeners shall not be less than 8" for manual and semi-automatic welds.

Clear spacing between stiffeners shall be not less than the following for automatic welds:

- 10" or 1 1/2 times the maximum stiffener width whichever is larger

DETAIL NAME: BEARING/JACKING STIFFENER DETAILS

SHEET NO. S-7

1/27/2005 1:42:19 PM $(_USTN_MACHINE)\computer_support\StructuresSoftware\StructuresManual\2005 Jan\Graphics\PreferredDetailsDGNs\steel_detail2.dgn

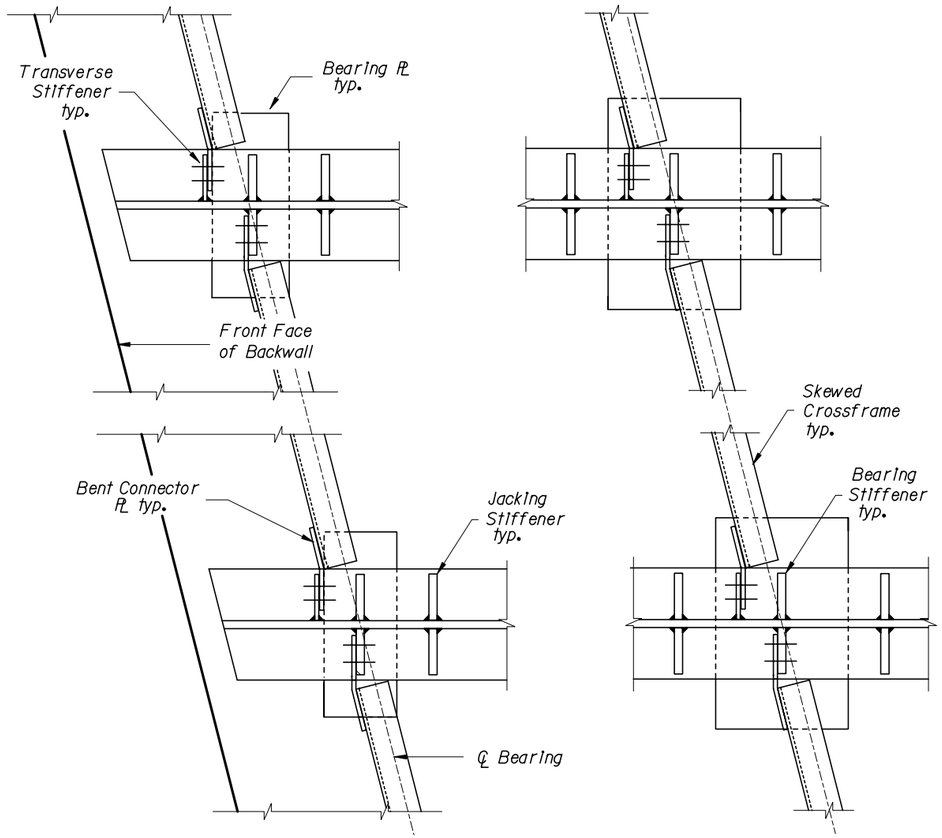

PLAN VIEW
AT END BENT
OR EXP. JT.

PLAN VIEW
AT INTERIOR PIER

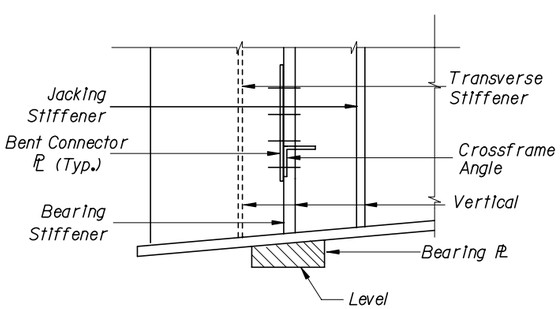

ELEVATION VIEW
AT END BENT
OR EXP. JT.

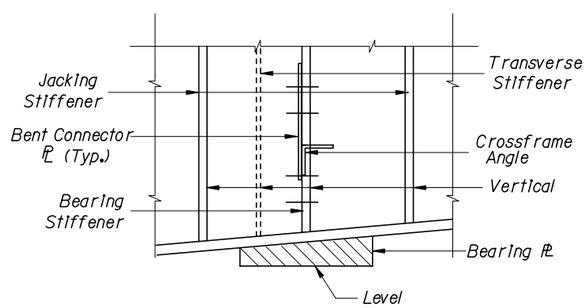

ELEVATION VIEW
AT INTERIOR PIER

END CROSSFRAME/DIAPHRAGM CONNECTION DETAIL

End Crossframe/Diaphragm Connection Detail: It is recommended that the end crossframes be connected directly to the bearing stiffeners where possible. On skewed bridges it is desirable to keep all stiffeners perpendicular to the web and to fasten the crossframe to the stiffener using a bent connector plate that is welded to the crossframe assembly and bolted to the stiffener. Additional transverse stiffeners may be added to allow the crossframes to align with the centerline of bearing. Crossframes may also be connected directly to a bearing stiffeners resulting in a stepped configuration. In any case, the crossframe assembly needs to be checked to make sure it can be rotated into place during construction. It is also recommended that all stiffeners be spaced to facilitate welding. The clear distance between stiffeners shall not be less than 8" for manual and semi-automatic welds. The clear distance between stiffeners shall not be less than 10" or 1½ times the maximum stiffener width for automatic welds. All bearing stiffeners to be vertical in the final girder position.

Design to place jacks directly under beam lines for future bearing replacement where possible. Pier/Endbent caps and bearings should be sized to accommodate jacks. Full depth bearing stiffeners are recommended.

DETAIL NAME:	SHEET NO.
END CROSSFRAME/DIAPHRAGM CONNECTION DETAILS	S-8

1/27/2005 1:42:49 PM $(_USTN_MACHINE)Computer_support\StructuresSoftware\StructuresManual\2005 Jan\Graphics\PreferredDetailsDGNs\steel_detail2.dgn

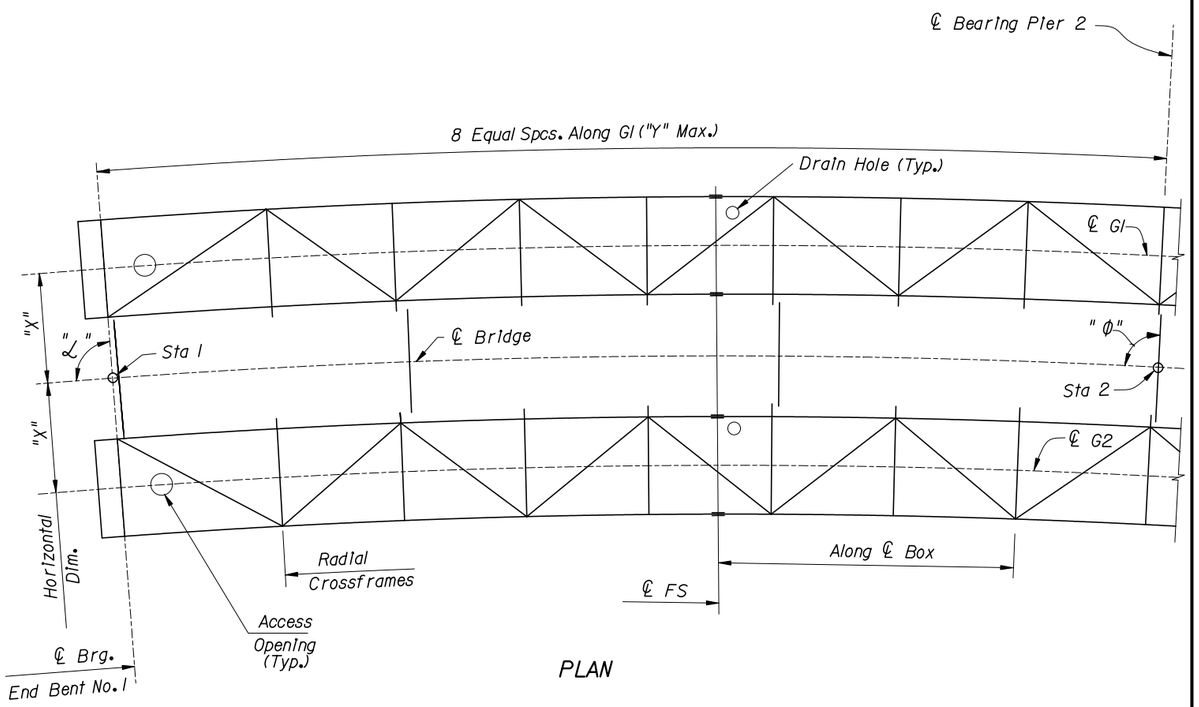

PLAN

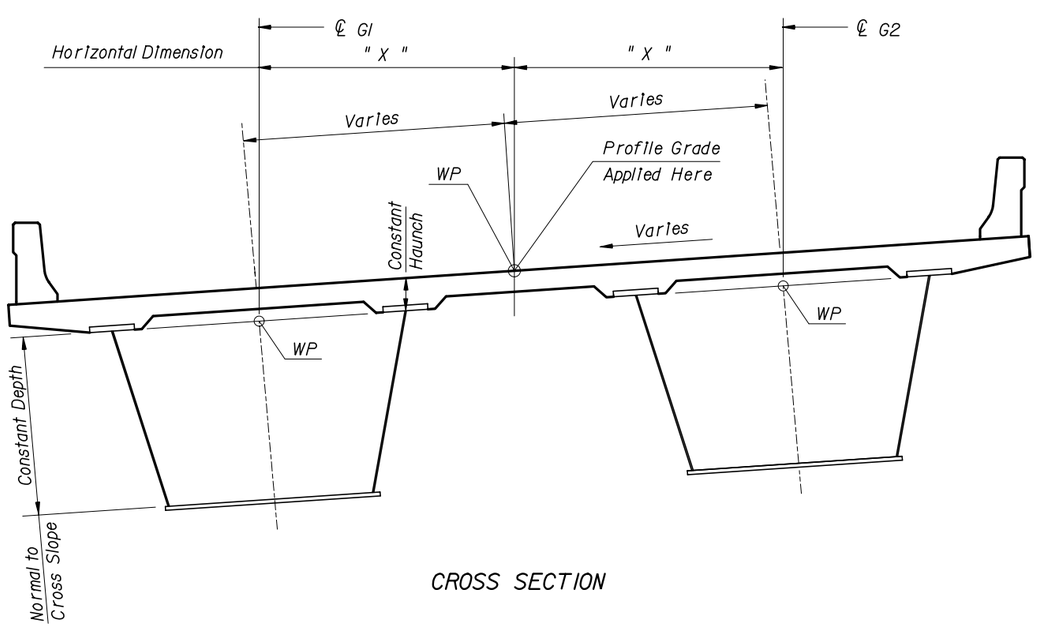

CROSS SECTION

GENERAL GEOMETRY PHILOSOPHY - STEEL BOXES

It is generally desirable to hold the horizontal dimension between box girders constant and to rotate boxes for the required bridge cross slope. This requires that diaphragms between girder lines vary in length as the cross slope varies, but allows for the internal box bracing to be constant throughout.

FRAMING PLAN GEOMETRY

1. Basic Information Required:
   - Starting Coordinates
   - Stations at PC, SC, PT, ℄ Brg, etc.
   - Azimuths or Bearings of ℄ Pier
   - Station at Cross Slope or Lane Width Changes.
   - Depth of Concrete Haunch (Top of Slab To top of Web)
2. Space Crossframes along ℄ of Longest Girder & note max. spacing.
3. Locate Field Splices (FS) Radially to each Box. Locate ℄ FS from ℄ Pier.

CROSS SECTION GEOMETRY

1. Rotate Box with Cross Slope.
2. Maintain Constant Trapezoidal Shape.
3. Maintain Constant Concrete Haunch.
4. Horizontal Station Offsets preferred.

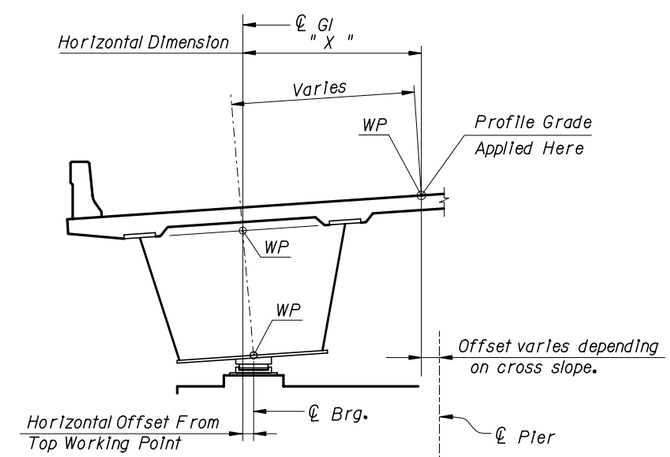

CROSS SECTION SHOWING BEARING OFFSET

DETAIL NAME: BASIC GEOMETRY - STEEL BOX

SHEET NO. S-9

1/27/2005 1:15:28 PM $I_USTN_MACHINE\computer_support\StructuresSoftware\StructuresManual\2005 Jan\Graphics\PreferredDetailsDGNs\geosteelbox1.dgn

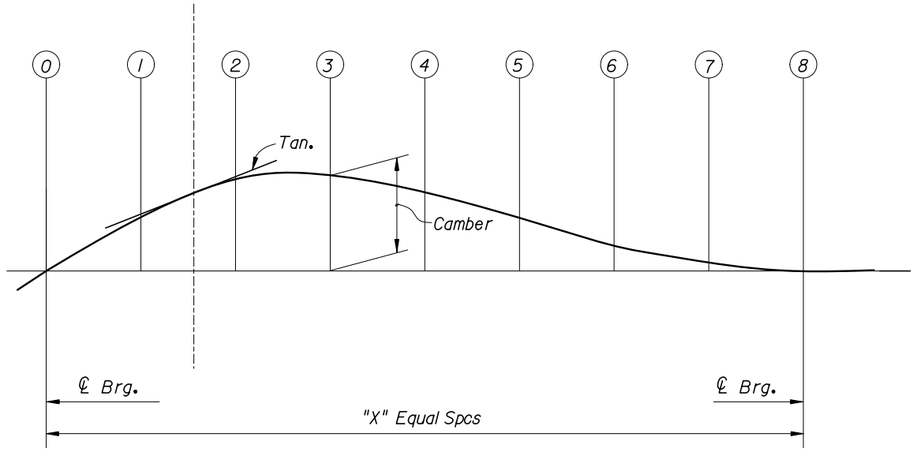

LINE		0	1	2	3	4	5	6	7	8
GI	STEEL DL	0								0
	CONCRETE DL	0								0
	TOTAL DL	0								0
VERTICAL CURVE	VC	0								0
	TOTAL	0								0

Cambers can be given in fractions, decimal of a foot or decimal inches.

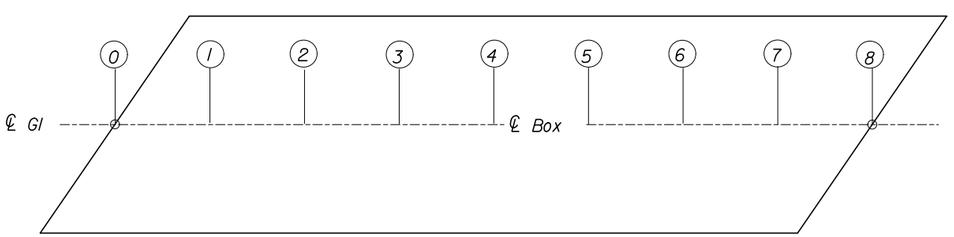

Camber Information is shown for a Box Girder, the same Information would also apply to Plate Girders.

BOX GIRDER CAMBER DIAGRAM
Show Camber Data Along ℄ Box

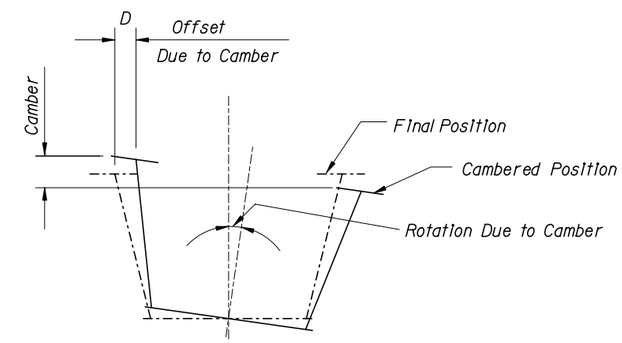

DIFFERENTIAL CAMBER

Problems When Near Web and Far web have different Cambers.
This can be avoided if the Box is cambered along its ℄

DETAIL NAME:
BOX GIRDER CAMBER DIAGRAM

SHEET NO.
S-10

1/27/2005 1:06:46 PM $I_USTN_MACHINE$Computer_support\StructuresSoftware\StructuresManual\2005 Jan\Graphics\PreferredDetailsDGNs\cdiagram.dgn

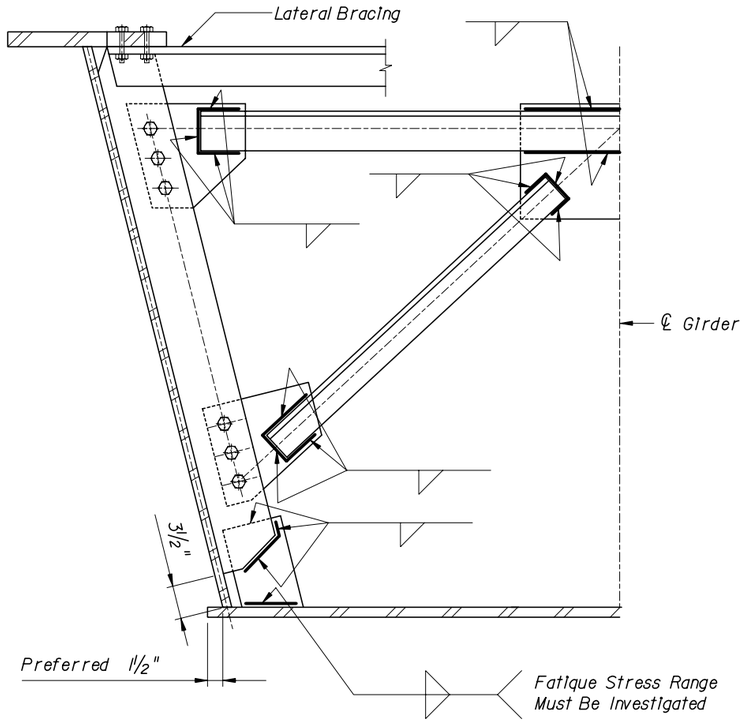

BOLTED CROSSFRAME

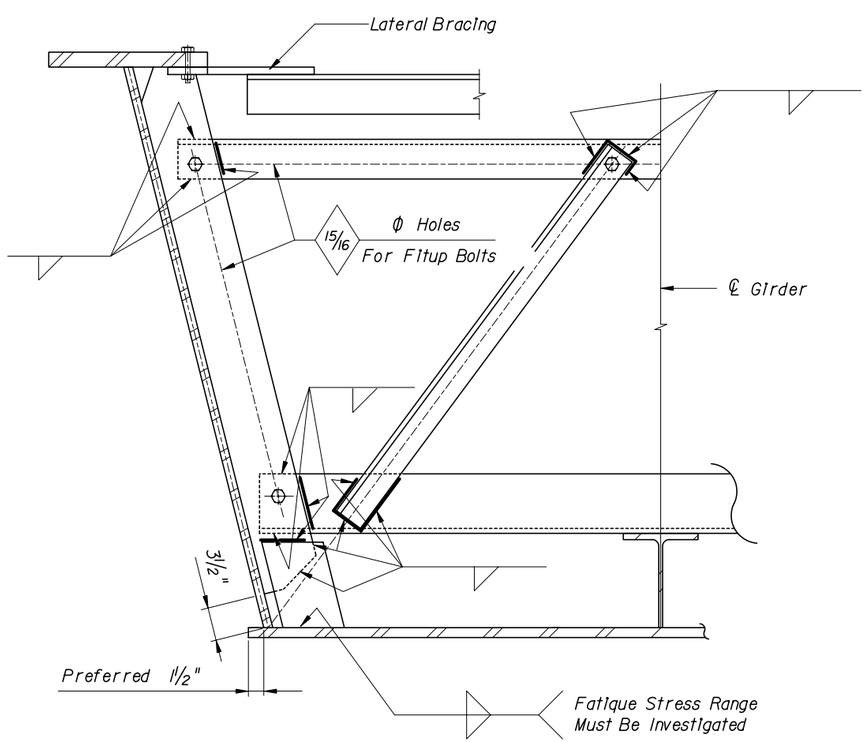

WELDED CROSSFRAME

TYPICAL CROSSFRAME DETAILS FOR BOX GIRDER BRIDGES

Designer should show both Welded and Bolted Alternates

1. 1½" (Min.) bottom flange extension is required for flux support and for the welding machine to track on.

2. Web, top flange and stiffeners are usually fabricated as a sub-assembly prior to fitting to the bottom flange.

3. The Crossframe is built in a jig as a sub-assembly, fit-up and welded. Note that all welding is made from near side.

4. The Crossframe sub-assembly is then bolted to the web/top flange sub-assembly which helps shape the final girder assembly.

5. The web/top flange sub-assembly with the crossframes bolted in place is then fitted to the bottom flange plate which has been blocked to its cambered shape. The web to bottom flange plate welds are then made. The 3½" gap at the bottom allows the web to flange welding to be made without interruptions.

DETAIL NAME:	SHEET NO.
TYPICAL CROSSFRAME DETAILS BOX GIRDER BRIDGES	S-11

1/27/2005 1:46:05 PM $(_USTN_MACHINE)Computer_support\StructuresSoftware\StructuresManual\2005 Jan\Graphics\PreferredDetailsDGNs\stl_box_xframe.dgn

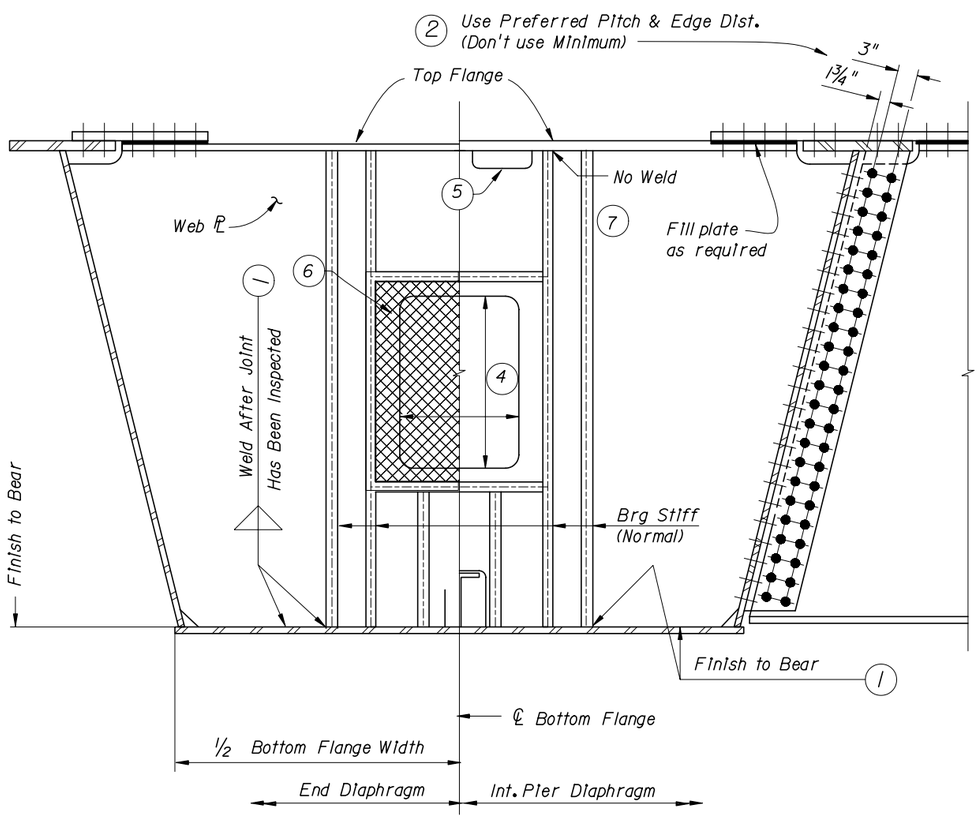

PIER DIAPHRAGMS

PIER DIAPHRAGMS

1. Detail diaphragm assembly/bottom flange connection with fillet welds and finish to bear surfaces. Avoid full penetration welds.
2. Use preferred edge distance and pitch, not minimums. Allow sufficient distance between end diaphragms and back walls to facilitate field bolting.
3. General Detailing Philosophy: Detail diaphragm so it can be sub-assembled, then fitted to bottom flange and web assemblies in the shop. It is preferable to keep stiffeners normal to bottom flange; allow to rotate with box as required.
4. Size diaphragm access openings in accordance with Structures Design Guidelines.
5. Provide openings in diaphragm to facilitate raceways for maintenance box lighting conduit.
6. Diaphragm access openings at end of units shall be covered by screened door to allow for inspection access at piers while prohibiting animals access.
7. Shim tie-plate as required to fasilitate fit-up and to eliminate the likelihood of introducing residual stresses.

DETAIL NAME: PIER DIAPHRAGMS - BOX BRIDGES

SHEET NO. S-12

1/27/2005 1:45:37 PM $_USTN_MACHINE\computer_support\StructuresSoftware\StructuresManual\2005 Jan\Graphics\PreferredDetailsDGNs\stl_box_diaph.dgn

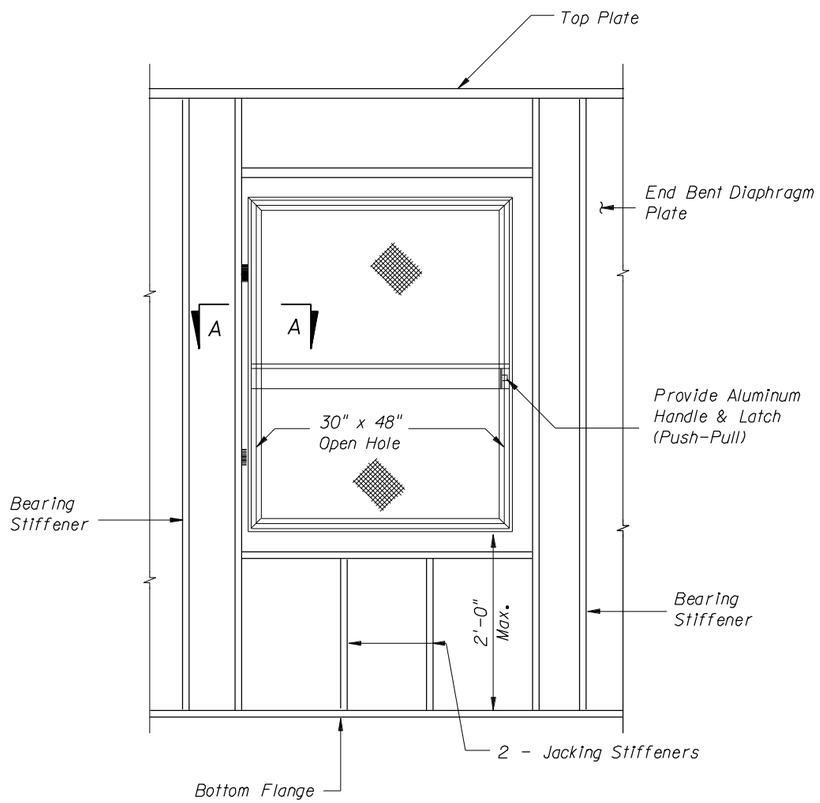

ELEVATION OF ACCESS DOOR AT END BENT DIAPHRAGM OPENING

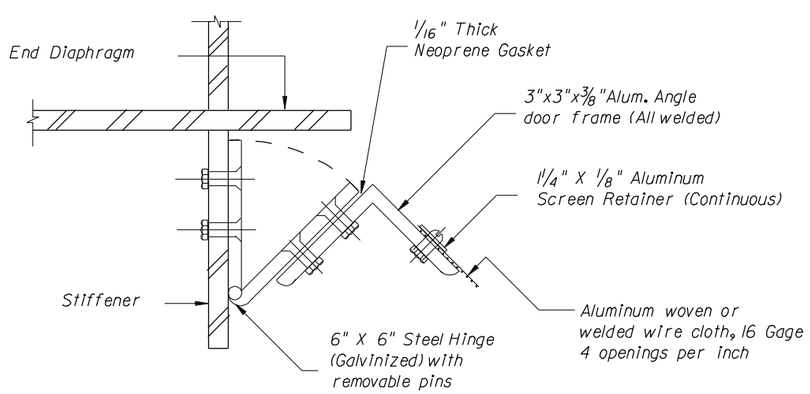

SECTION A-A

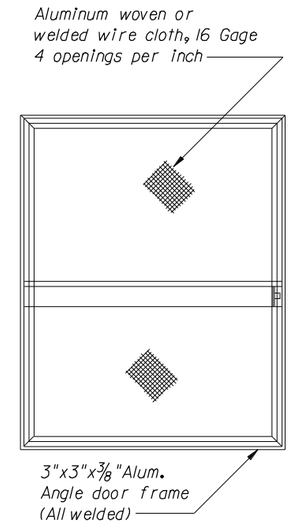

DOOR FRAME

1. Door must open towards the inside of the steel box girder.
2. Cost of screened closure door is incidental to the cost of Structural Steel.
3. Structural steel fabricator shall submit shop drawings for approval.
4. All aluminum members shall conform to alloy 6061-T6.
5. All work shown on this sheet shall be shop fabricated and mounted prior to shipping to the job site.
6. All work shall conform to Section 965 Of the FDOT Standard Specifications.

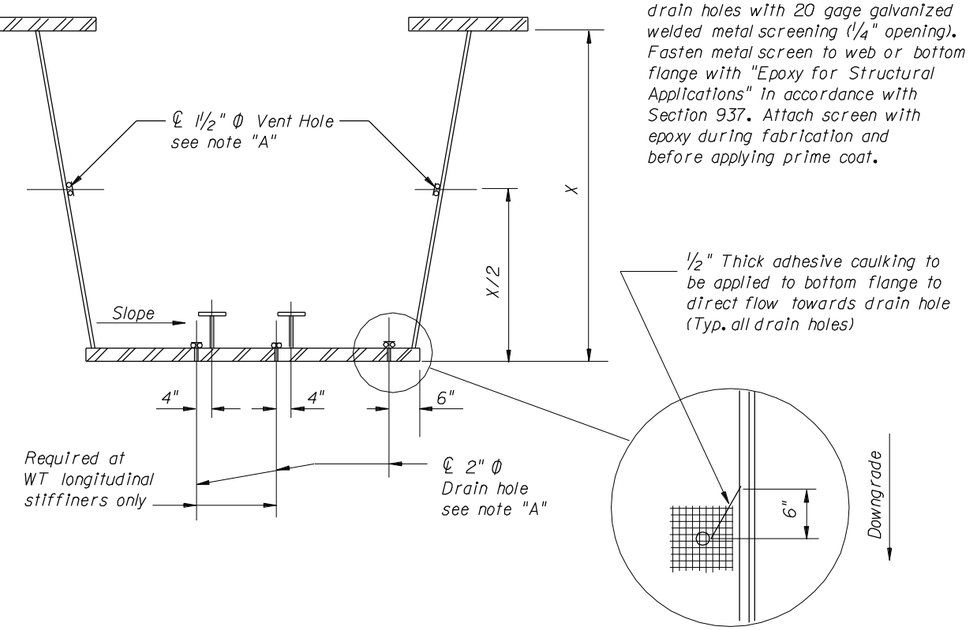

NOTE "A": Cover vent holes and drain holes with 20 gage galvanized welded metal screening (1/4" opening). Fasten metal screen to web or bottom flange with "Epoxy for Structural Applications" in accordance with Section 937. Attach screen with epoxy during fabrication and before applying prime coat.

PLAN OF DRAIN HOLES

SECTION - WEB VENT HOLE/GIRDER DRAIN HOLE DETAIL

Place vent holes and drain holes at 50'-0" maximum spacing. Vent holes to be located 25'-0" minimum and drain holes at 5'-0" minimum from ℄ pier/FFBW.

PROJECT NAME:	SHEET NO.
STEEL BOX SCREENING	S-13

$$$$$$$TIME$$$$$$$TIME$ $USERNAME$ $$$$$$$DGNSPECIFICATION$$$$$$$

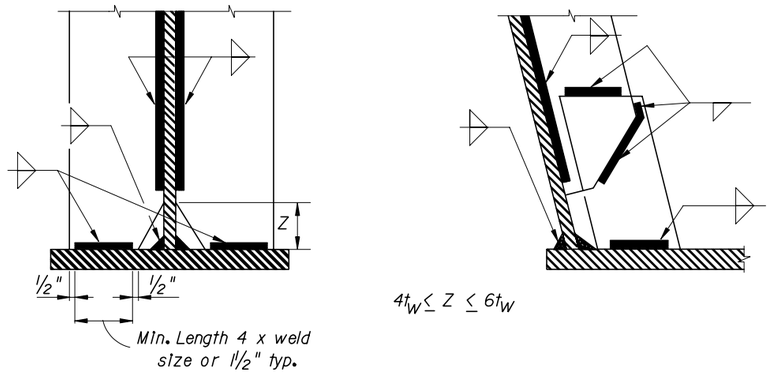

STIFFENER TERMINATION TYPE A

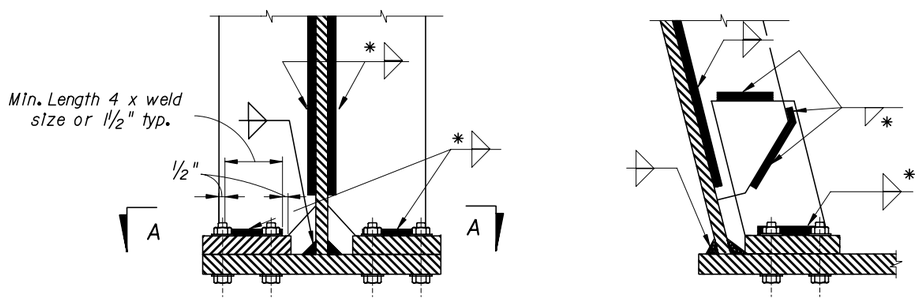

STIFFENER TERMINATION TYPE B
* INSTALL BOLTS PRIOR TO MAKING WELDS.

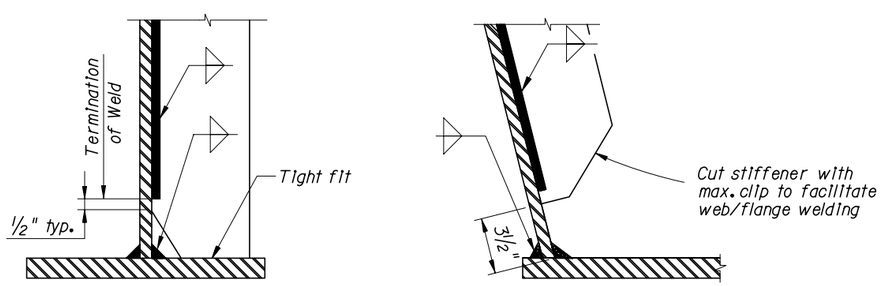

STIFFENER TERMINATION TYPE C

STIFFENER TERMINATION DETAILS
BOTTOM FLANGE SHOWN TOP FLANGE SIMILAR

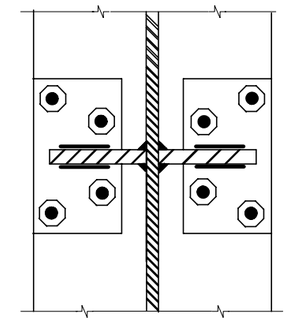

SECTION- A-A

STIFFENER TERMINATION DETAILS

Stiffener Termination Type A: Stiffener Termination Detail Type A is intended for both connection and intermediate stiffener/compression flange interfaces. Stiffener Termination Detail Type A is acceptable for all connection stiffener/tension flange interfaces when the live load stress range is within the allowable Category C fatigue limits.

Stiffener Termination Type B: Stiffener Termination Detail Type B is acceptable for all connection stiffener/tension flange interfaces when a direct weld connection does not meet the fatigue requirements.

Stiffener Termination Type C: Stiffener Termination Detail Type C is intended for intermediate stiffener/tension flange interfaces.

STIFFENER SIZING AND PLACEMENT

Connection and intermediate stiffeners should be detailed normal to girder webs.

Stiffeners should not be less than 1/2" thick.

Placement of Plate Girder Stiffeners: Intermediate stiffeners shall be placed on one side of web only. All non-bearing stiffeners located on exterior girders should be placed on the inside face of the web only. Consideration should be given to allowing stiffeners on the outside face of exterior girder webs when future widening is anticipated.

Conflicts between stiffeners and field splices should be avoided. All flange and web splices should be located a minimum of 1'-0" from the nearest stiffener to facilitate NDT.

DETAIL NAME:	SHEET NO.
STIFFENER DETAILS	S-14

1/27/2005 1:41:55 PM t_USTN_MACRO Manual\2005 JanGraphics\PreferredDetailsDGNs\steel_detail2.dgn

Steel Shop Drawing Review Guideline
Checklist

The following is a list of common items that should typically be checked on Shop Detail Drawings. Unusual designs may contain unique details that are beyond the scope of this guide and not fully covered here. The reviewer's judgment must prevail in determining the extent and depth of review on each project.

I. Principal Controlling Dimensions, Material and Connection Properties

The following principal controlling dimensions, material and connection properties shall be considered essential items for reviewing all Shop Detail Drawings:

- ☐ a. Length of span, ie. the horizontal distance between bearings, pin centerlines or other points of support.
- ☐ b. Thickness and width of plates in primary members and splices.
- ☐ c. Primary dimensions and/or weight per foot of rolled shapes.
- ☐ d. Diameter, specification and grade of mechanical fasteners (bolts, nuts, studs, couplers, etc.), and coating if required (mechanical or hot dip galvanizing).
- ☐ e. All dimensions of machined pins, hangers and complex bearings.
- ☐ f. Specification, grade and toughness testing requirements for steel components.
- ☐ g. Elevation of seats or other supports for steel members.
- ☐ h. Size of fillet welds and partial joint penetration welds; appropriate partial and complete joint penetration weld configurations.

II. Web and flange plates of welded members and rolled beam stringers.

- ☐ a. Shop butt weld splice locations.
- ☐ b. Flange and web tapers and haunches (controlling dimensions only).
- ☐ c. Cover plate dimensions and termination details.
- ☐ d. Location of tension and compression zones in welded members.

III. Stiffener and connection plates

- ☐ a. Width, thickness, material grade and if toughness testing required (curved bridge, floor beam connection, etc.).
- ☐ b. Weld size and termination details and bolting to web and flange details.
- ☐ c. Appropriate spacing of intermediate stiffeners.
- ☐ d. Avoiding interference with shop web and flange splice locations.
- ☐ e. Fit and location of stiffeners.
- ☐ f. Bolt hole edge distances and compatibility with diaphragm/cross frame connections.

IV. Bolted Splices

- ☐ a. Length of flange splices, width and depth of web splices.
- ☐ b. Number, size and spacing of bolts and holes in splice material.
- ☐ c. Fill plates if necessary.
- ☐ d. Proper bolt hole edge distances.

V. Cross frames and diaphragms

- ☐ a. Number and spacing of connection plate bolts, and type of holes, especially for slip critical connections or details required for differential deflections.
- ☐ b. Length termination details and number of shop welds.

VI. ☐ Camber and/or mid-ordinate for cambered rolled beams or girder sections (spot check).

VII. ☐ Elevation at center of span or segment, field-splice, abutment and pier ordinates on shop assembly diagrams.

VIII. ☐ Number and spacing of bolts in floor beam and cross girder connections as well as special attachments (brackets, pot bearings, etc.).

IX. General notes and detail sheets relative to cleaning and painting.

- ☐ a. Corner preparation (if required for cut edges)
- ☐ b. Cleaning, required surface preparation (SP6, SP10, etc.) and profile depth (if specified)
- ☐ c. Shop Primer: type; manufacturer; wet or dry film thickness; verification of cure before shop application of subsequent coats (required); applicable restrictions on field contact (faying) surfaces; any requirements for pre-priming shop contact surfaces before assembly (e.g. inside boxes, shop bolted assemblies); and designation of any field weld areas to be left unprimed.
- ☐ d. Top Coat(s): shop or field; type; manufacturer; wet or dry film thickness; intermediate coat cure times and/or recoating "window" (time) if specified by the Contract documents or paint manufacturer's date sheet; any block out areas where shop topcoats are not permitted (e.g. field splices, diaphragm/cross frame connections, bearings).

X. ☐ Designation of material, tension zones and welds for Fracture Critical Members (FCM's), including applicable nondestructive testing.

DETAIL NAME:	STEEL SHOP DRAWING REVIEW GUIDELINES (1 of 2)	SHEET NO. S-15

1/27/2005 1:43:44 PM $(_USTN_MACHINE)\computer_support\StructuresSoftware\StructuresManual\2005 Jan\Graphics\PreferredDetailsDGNs\steel_shop.dgn

Steel Shop Drawing Review Guideline
Checklist (cont.)

XI. Material and material testing

- ☐ a. Material specified in accordance with the Contract documents.
- ☐ b. Substitutions for material less than 3/8" thick, especially fills and shims.
- ☐ c. Substitutions for material over 3/8" thick.

XII. Incorporation of all necessary revisions into the Shop Detail Drawings

- ☐ a. Errors or discrepancies in the Contract plans discovered during Shop Detail Drawing preparation or review.
  Such errors must be conveyed to the Owner and the Contractor to determine and implement appropriate corrective actions. Depending on the extent and importance, Contract plan corrections or project modifications may be distributed by the Owner as Construction Changes or notification may be verbal, followed by written documentation to all parties.
- ☐ b. All Construction Changes that affect the Shop Detail Drawings.
  Recent Construction Changes not incorporated into the Shop Detail Drawings do not usually justify rejection. Unless changes will drastically alter fabrication details, a copy of the Construction Change may be returned with "approved as corrected" Shop Detail Drawings in such circumstances. Note: Corrections noted on Shop Detail Drawings do not constitute "Construction Changes" and should not be used to informally affect Construction Changes.
- ☐ c. Fabricator-proposed modifications approved by the Owner and Contractor. These include deviations from the Contract requirements, substitutions of material or modifications to the Contract plan details, based upon the Fabricator's request (at no cost to the Owner), that have received prior approval from the Owner and Contractor.

XIII. Erection Framing Plan details

- ☐ a. Basic span lengths and, where appropriate, transverse girder spacing.
- ☐ b. Pier and abutment identifications.
- ☐ c. Orientation of structure (north arrow), skew(s), spot checks of curve or flare geometry if applicable.
- ☐ d. Adjustments for special bearings, expansion joints or other items not adequately covered by the contract plans to compensate for temperature or other variables where applicable.
- ☐ e. Piecemarks indicated for every element, and their relative location (end, side) is shown to clarify member orientation.
- ☐ f. Compare erection plan with Contractor's Traffic Control scheme. Ensure that public safety issues are addessed. Note special requirements concerning temporary shoring and equipment affecting public safety.

XIV. ☐ Answer or acknowledge all appropriate questions noted on Shop Detail Drawings as "Engineer verify" (does not include "Contractor verify" or "Field verify" queries that must be resolved by others before final Shop Detail Drawing approval).

XV. Compliance with Owner-specific or project-specific requirements that may supersede the requirements of this checklist.

- ☐ a. Financial Project Number, drawing title and number, title block showing Fabricator and Contractor name, initials of persons responsible for drawing, dates in which drawing was prepared including revision dates as required. Item decription including Bridge Number should be clearly shown on drawing.
- ☐ b. Standard title box notes (hole diameter, welding, paint, etc.) do not conflict with Contract requirements.
- ☐ c. Proper notation of revision date(s) and number(s) on revisions after the first submission.
- ☐ d. Miscellaneous project-specific items such as utility attachments, special connections or connection materials (pins, links, cables), and stage removal and construction.
- ☐ e. Professional Engineer Seal if required.
- ☐ f. Contractor's approval stamp with date and initials.

XVI. ☐ Special needs for special structures, for example: special handling instructions or temporary fixtures for lifting, positioning and transportation; protection of critical components and connections; and dimensional controls required for shop and field assembly. "Special structures" include truss, cable stayed, suspension, tied arch and moveable (lift, swing, bascule) bridges.

XVII. ☐ Verify that Welding Proceedures are submitted for all weld types within project.

DETAIL NAME: STEEL SHOP DRAWING REVIEW GUIDELINES (2 of 2)

SHEET NO. S-16

1/27/2005 1:44:10 PM $I_USTN_MACHINE\computer_support\StructuresSoftware\StructuresManual\2005 Jan\Graphics\PreferredDetailsDGNs\steel_shop.dgn

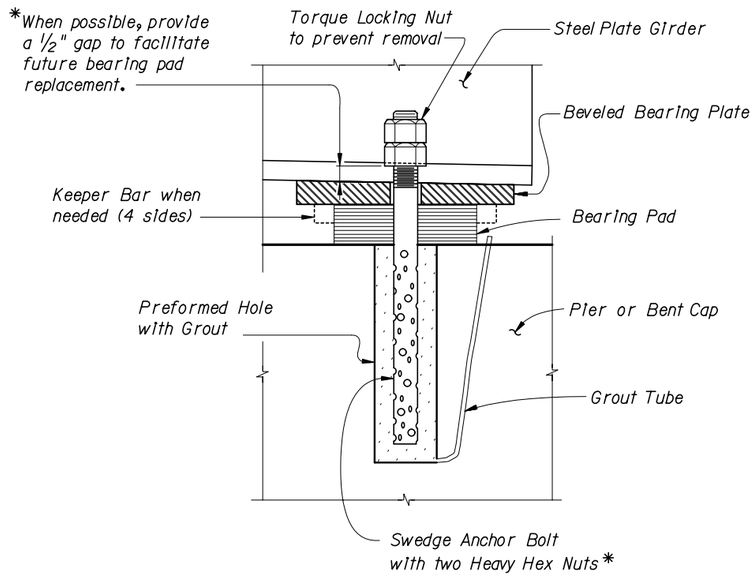

ANCHOR BOLT DETAIL FOR COMPOSITE NEOPRENE BEARING PADS

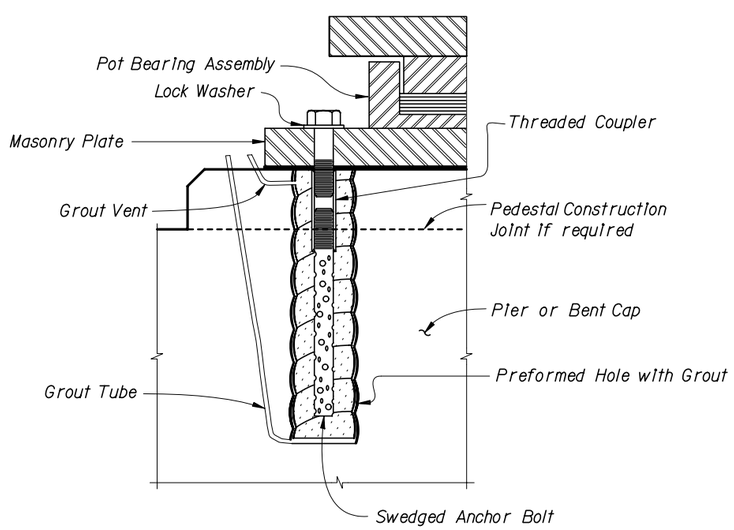

ANCHOR BOLT DETAIL FOR POT BEARINGS

DESIGNER NOTE

Preformed anchor bolt holes are required on all steel bridges to facilitate fit-up and to eliminate the need for field drilling.

Show all preformed holes on substructure components. The reinforcing steel shall be detailed to clear blockouts.

CONSTRUCTION NOTE

Blockout hole shall be free of debris prior to grouting. The blockouts shall be grouted with a non-shrink grout conforming to the Specifications and having a minimum compressive strength at 28 days of 5000 psi.

Blockout shall have a minimum diameter of 4".

DETAIL NAME:	SHEET NO.
ANCHOR BOLT DETAILS	S-17

$$$$$$$SYTIME$$$$$$$$TIME$ $USERNAME$ $$$$$$$$DGNSPECIFICATION$$$$$$$$

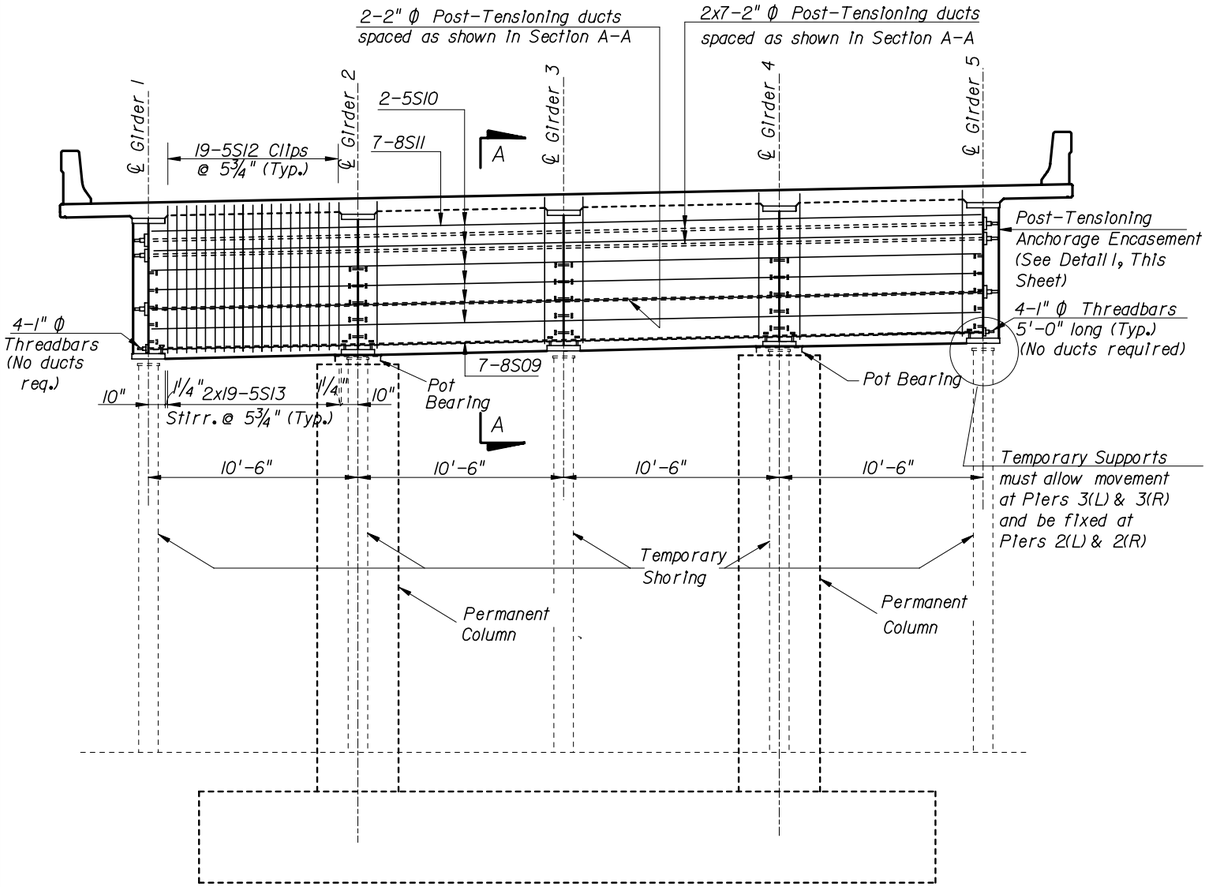

ELEVATION OF PIER CAP

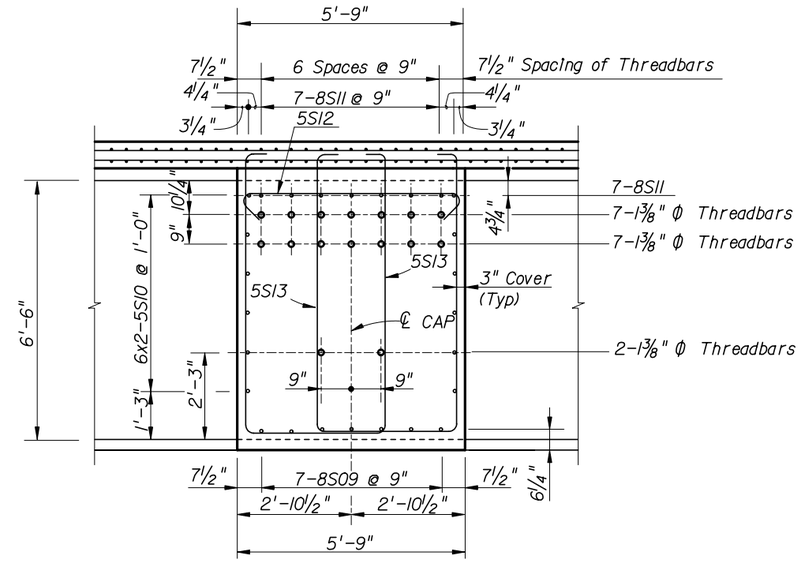

SECTION A-A

NOTE: Beveled Anchor Plates to be finished straight and true to achieve full Bearing on Girder Web. Surface in contact with Girder Web to receive an ANSI 500 finish

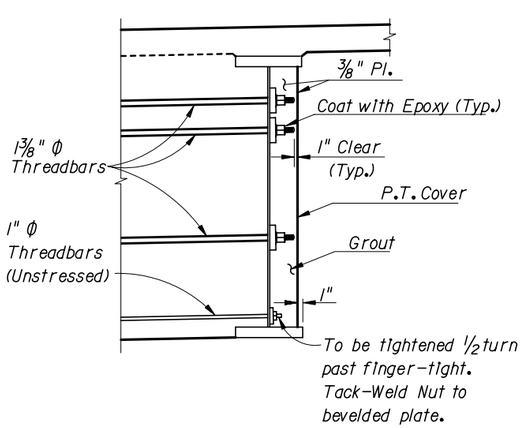

SECTION B-B
(Studs not shown for clarity)

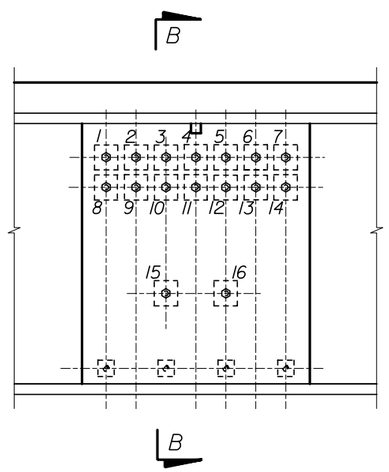

DETAIL 1

NOTES:

1. Remove temporary shoring under Girders 1 & 5 prior to removing shoring under Girder 3.
2. Threadbars shall be tensioned in the following order:
   4, 11, 3, 5, 10, 12,
   15, 16,
   2, 6, 9, 13, 1, 7, 8, 14

GENERAL NOTES:

Bars for Post-Tensioning shall be 1⅜" ϕ uncoated, High Strength, Coarse Threadbars (Type II), conforming to ASTM Specification A-722 with latest revisions. ultimate tensile strength of bars=150,000 psi.

Jacking force required for each threadbar, after Anchor Set, is 165000 lb.

Anchorages for Threadbars shall be nuts, bearing on plate anchors, bearing on webs of exterior girders. Anchors shall be fabricated of Hot-Rolled Steel of a type and quality approved by the Engineer.

Concrete to be Class V (Special), f'c=6000 psi. Stressing operations shall not commence until the concrete has reached a compressive strength of 4500 psi as indicated by tests.

Duct vents are to be provided at both ends and at midspan of the ducts.

The tendon path shall be straight.

Bar reinforcement interfering with duct alignment shall be adjusted as directed by the Engineer in the field.

Anchorage details are to be determined by the Fabricator. Details shall be shown on the Shop Drawings and submitted to the Engineer for approval.

Duct placement tolerance shall be +/- ½" in the Horizontal direction and +/- 3/16" in the vertical direction.

Ducts to have an outside diam. of 2".

The following factors are used in the design of the Post-Tensioning Threadbars:

Anchor Set: 0"-⅛"
Friction Coefficient: 0.0
Wobble Coefficient: 0.0

PROJECT NAME: EXAMPLE OF INTEGRAL PIER CAPS

SHEET NO. S-18

1/27/2005 1:25:06 PM $I_USTN_MACHINE\computer_support\StructuresSoftware\StructuresManual\2005 Jan\Graphics\PreferredDetailsDGNs\integral pier caps.dgn

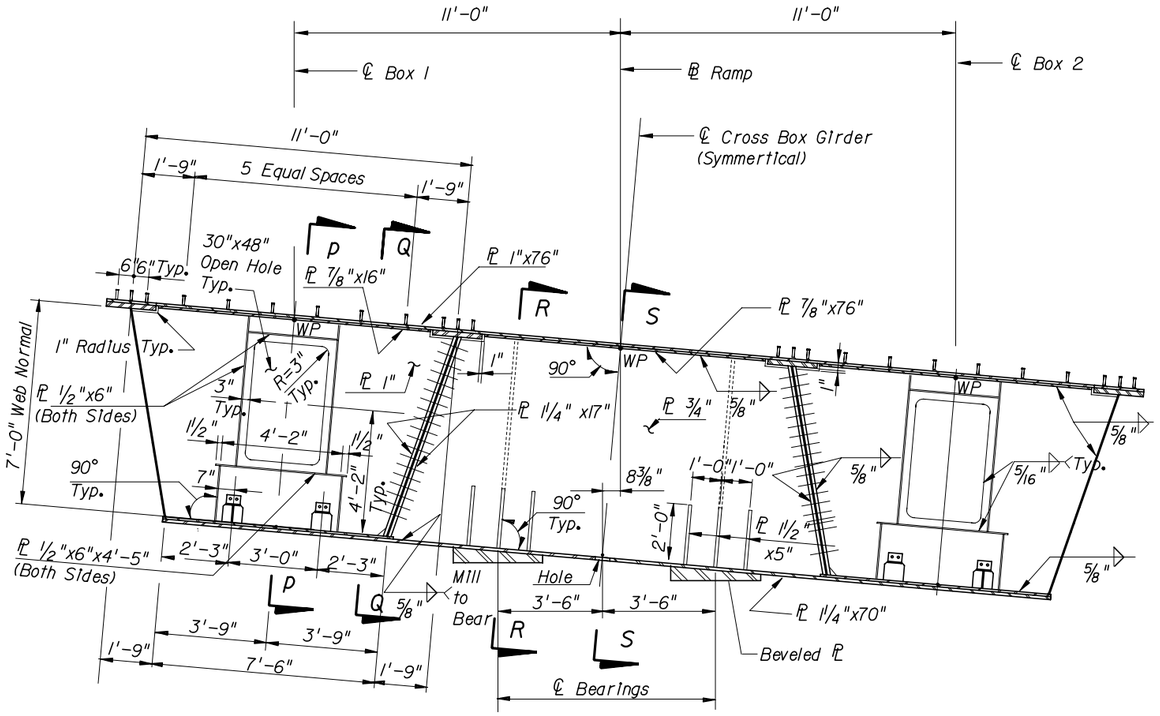

SECTION AT PIER

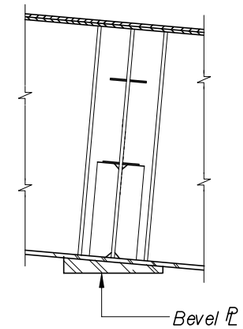

SECTION T-T

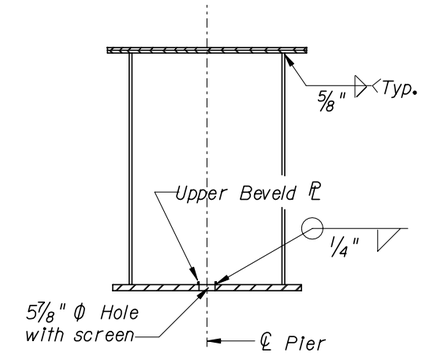

SECTION S-S

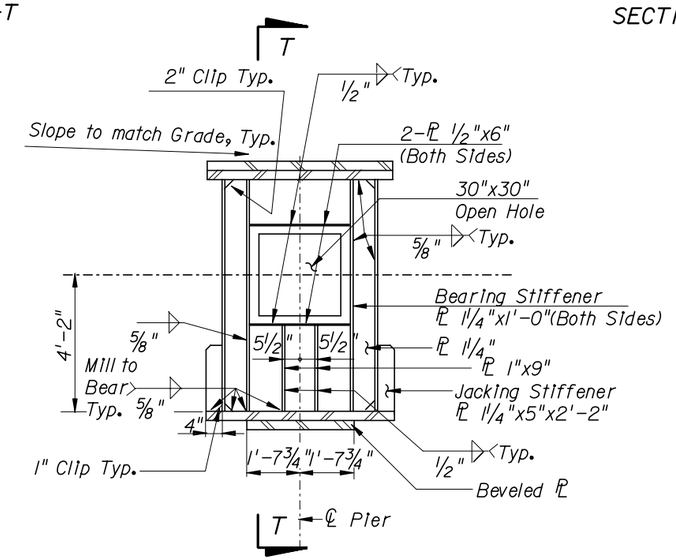

SECTION R-R

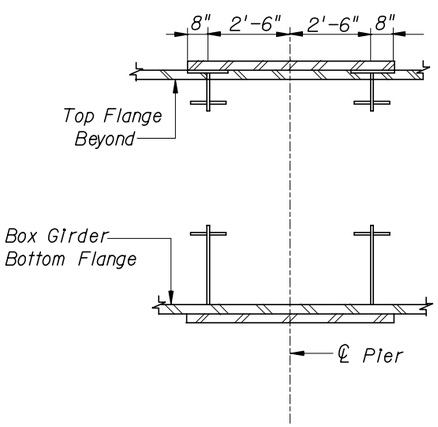

SECTION P-P

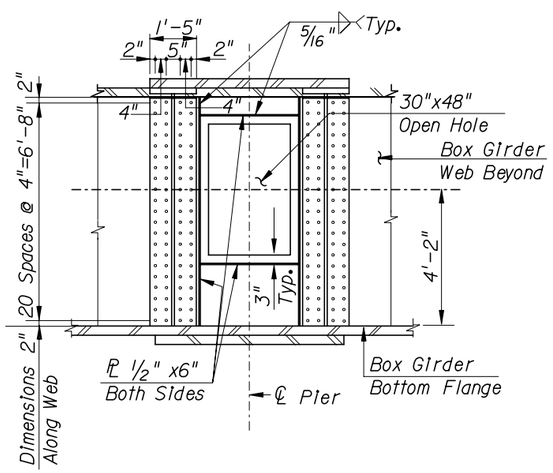

SECTION Q-Q

GENERAL NOTES

All Structural Steel shall be ASTM A709, Grade 50 unless otherwise noted.

All Bolted connections shall be slip-critical, with 1"ϕ A325 Bolts in 1 1/16" ϕ holes.

Top flanges and webs of diaphragm are fracture critical and shall meet the requirements of Chapter 12 of ANSI/AASHTO/AWS D1.5 Bridge Welding Code, Fracture control Plan (FCP) for Nonredundant Members.

PROJECT NAME: EXAMPLE OF INTEGRAL PIER CAP STEEL BOX

SHEET NO. S-19

1/27/2005 1:26:43 PM $(_USTN_MACHINE)\computer_support\StructuresSoftware\StructuresManual\2005 Jan\Graphics\PreferredDetailsDGNs\integral pier caps.dgn

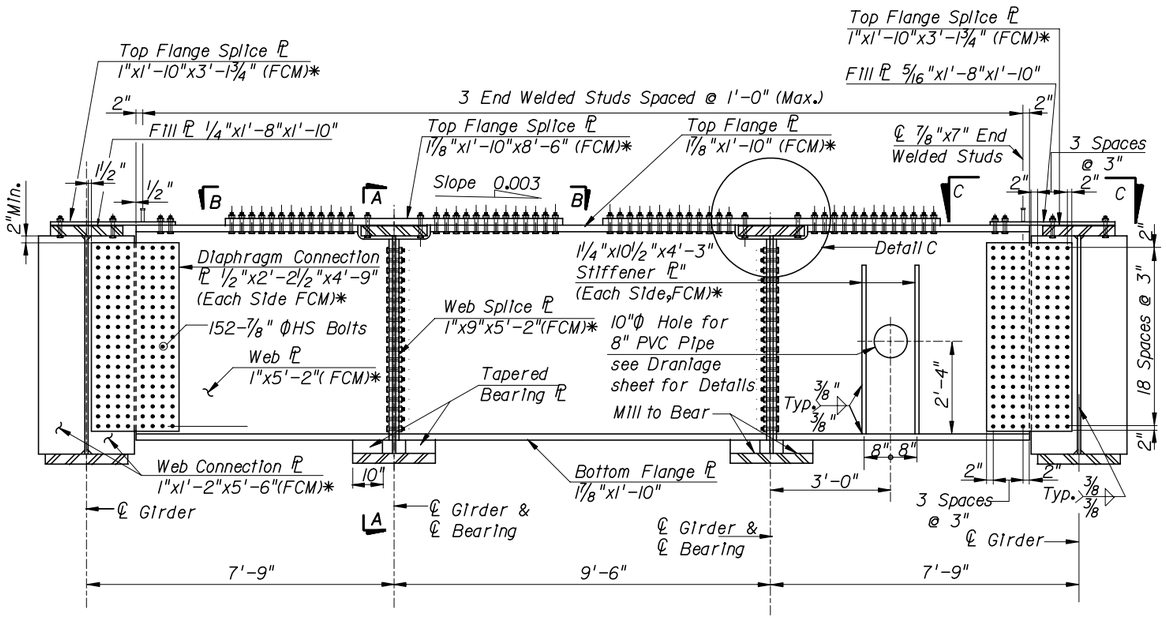

ELEVATION

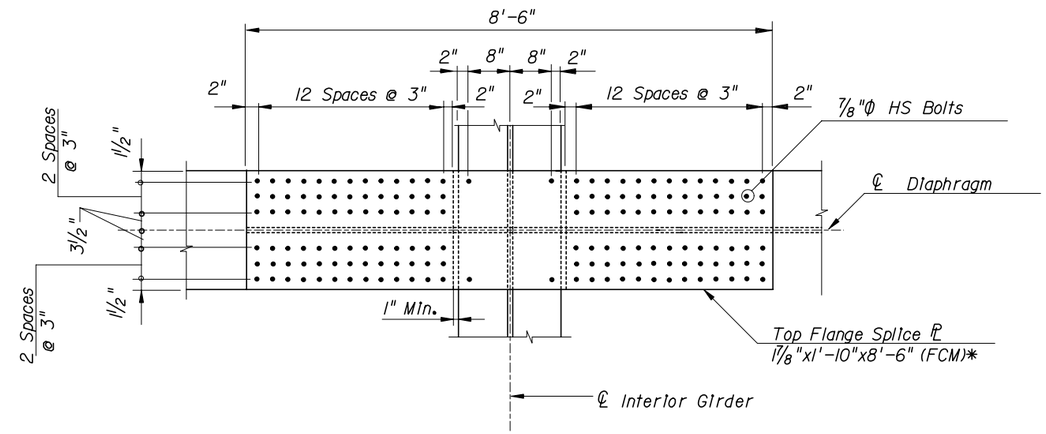

SECTION B-B

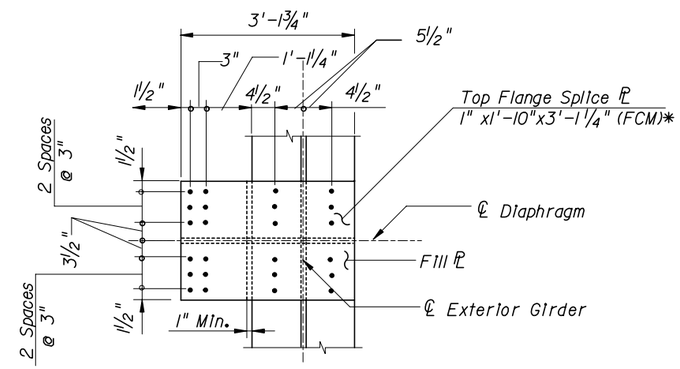

VIEW C-C

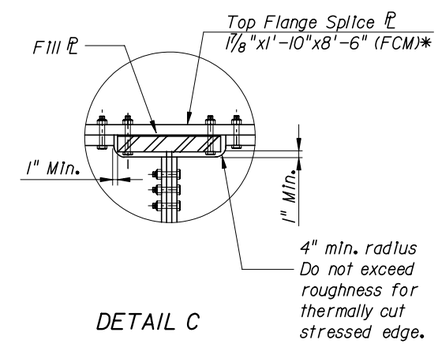

DETAIL C

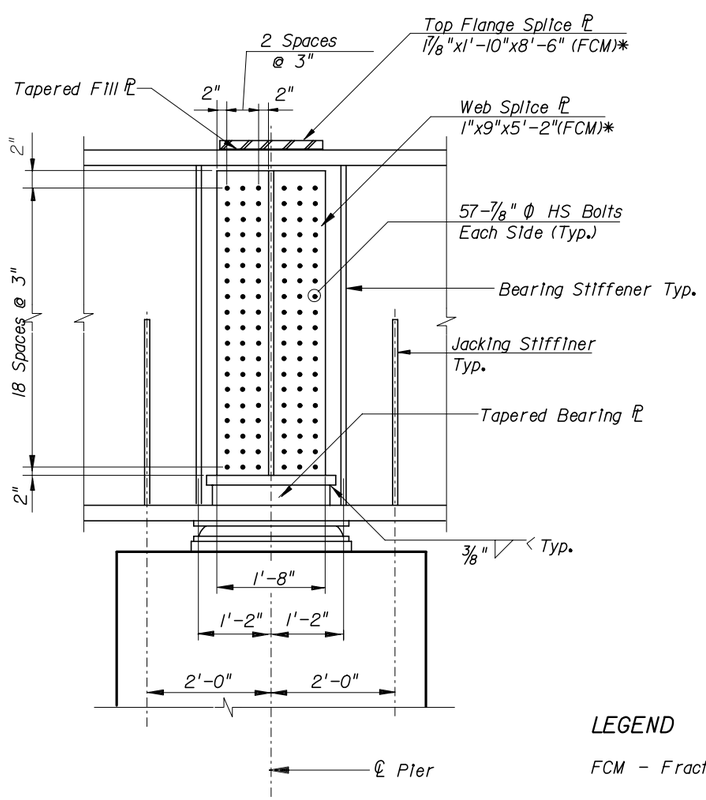

SECTION A-A

LEGEND

FCM - Fracture Critical Member (Including all Welds)

* - Charpy V-Notch toughness testing required on all Fracture Critical Members per notes for Structural Steel Girders.

GENERAL NOTES

1. All fasteners for diaphragms shall be ⅞" ϕ High Strength Bolts, ASTM A-325
2. All steel elements for integral diaphragms shall be ASTM A-709, Grade HPS-70W including diaphragm webs and flanges, web and diaphragm connection plates, top flange splice plates and web splice plates.
3. All webs shall be vertical after completion of construction.
4. A full shop assembly of the entire integral pier diaphragm and girders is required

PROJECT NAME: EXAMPLE OF INTEGRAL PIER CAP STEEL GIRDER

SHEET NO. S-20

1/27/2005 1:27:14 PM $(_USTN_MACHINE)dgn$(_computer_support\StructuresSoftware\StructuresManual\2005 Jan\Graphics\PreferredDetailsDGNs\integral pier caps.dgn

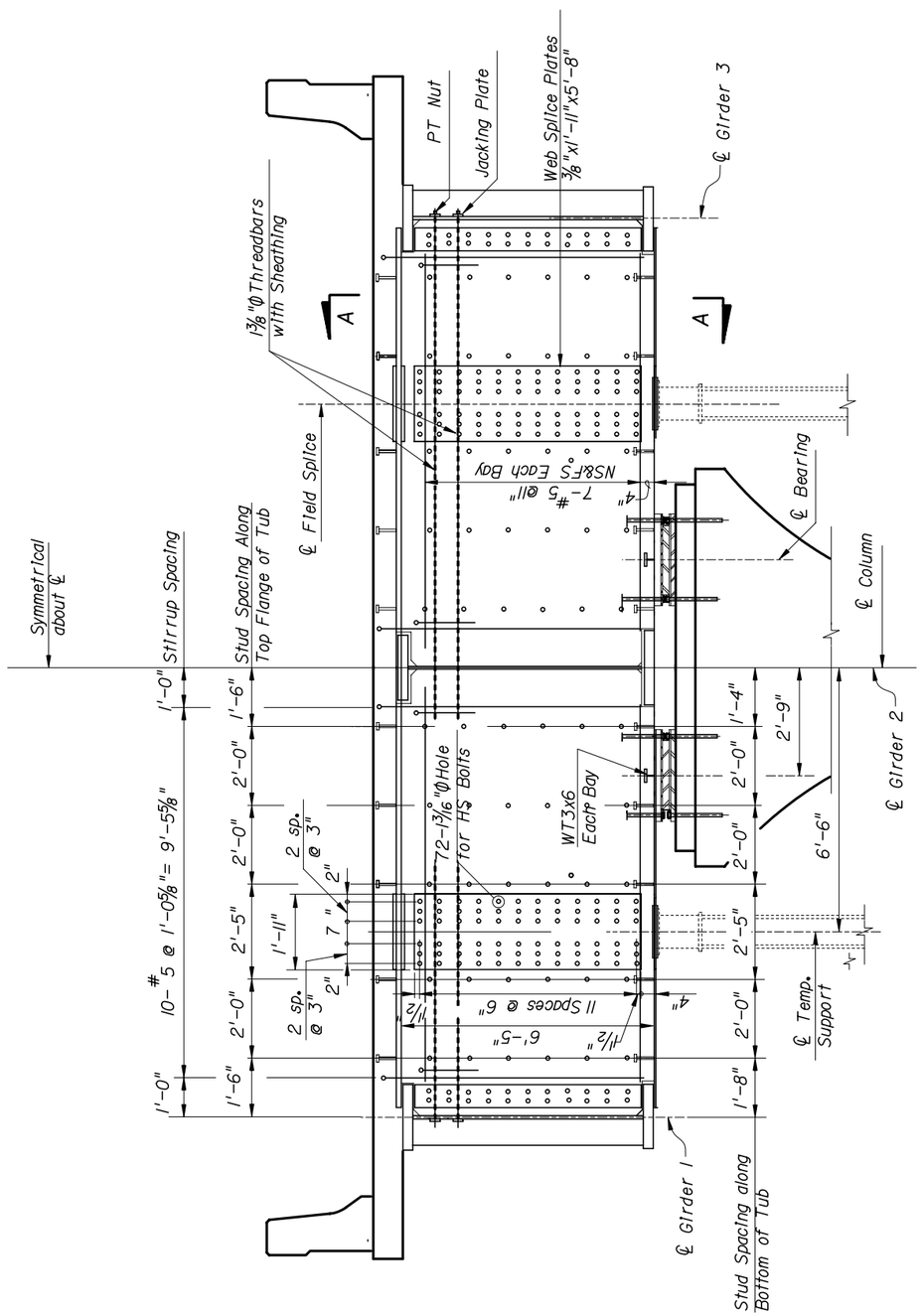

CROSS SECTION AT INTEGRAL PIER CAP

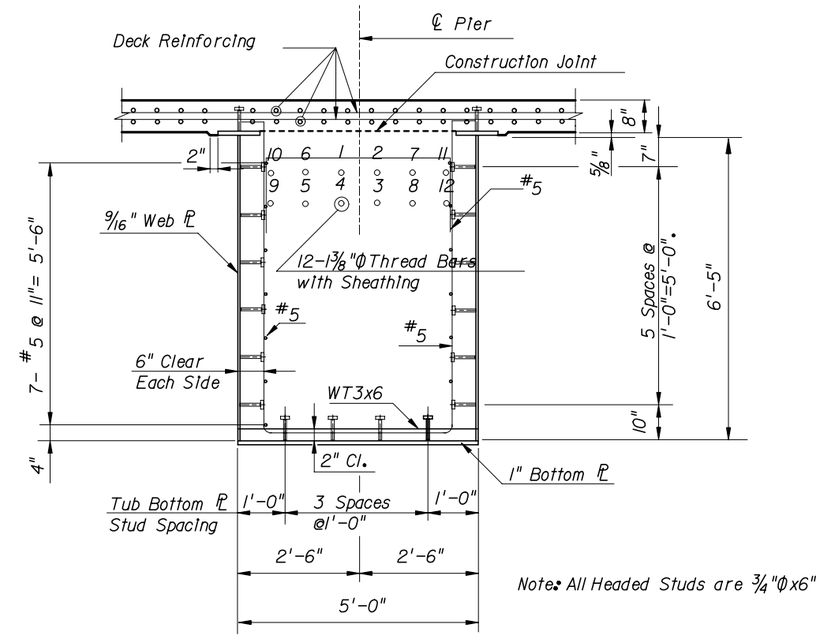

Note: All Headed Studs are 3/4"Φx6"

SECTION A-A

GENERAL NOTES

P.T. Bars shall be 1 3/8"Φ Threadbars with 2" O.D. Sheathing for Grouting. Grouting for Threadbars and end covers at exterior Girders shall be included in the Contractors bid price for Post-Tensioning Tendons (Superstructure Bars) Item No. 460-111-12.

P.T. Bars shall be uncoated 150,000 psi High Strength Coarse Thread Bar Meeting the requirements of ASTM A-722, Type II

Bars shall be stressed to 165,000 lb., after anchor set, from both ends. Stressing shall proceed in the sequence shown in Section A-A at the first end and in the reverse sequence at the opposite end.

Field section of Girders 1,2 &3 along with the Integral Cap Tubs shall be fully shop assembled prior to field erection and disassembled prior to shipping.

Concrete for Integral Caps shall be Class V, f'c = 6500 psi. Concrete shall reach a minimum compressive strength of 4000 psi prior to Post-Tensioning.

Contractor shall take care to insure proper placement of concrete under Girder and Tub Flanges. No voids will be permitted.

Integral Caps shall be perpendicular to Girder Flanges at ℄ Bearing.

PROJECT NAME:	SHEET NO.
EXAMPLE OF INTEGRAL CAP CONCRETE	S-21

1/27/2005 1:27:44 PM $KJUSTN_MACHINE$ Computer_support\StructuresSoftware\StructuresManual\2005 JanGraphics\PreferredDetailsDGNs\Integral pier caps.dgn

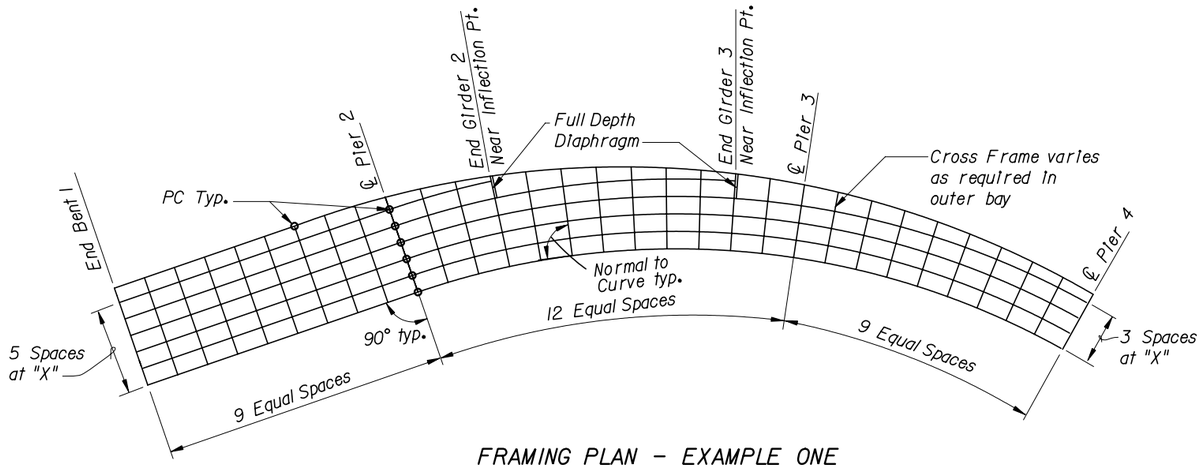

FRAMING PLAN - EXAMPLE ONE

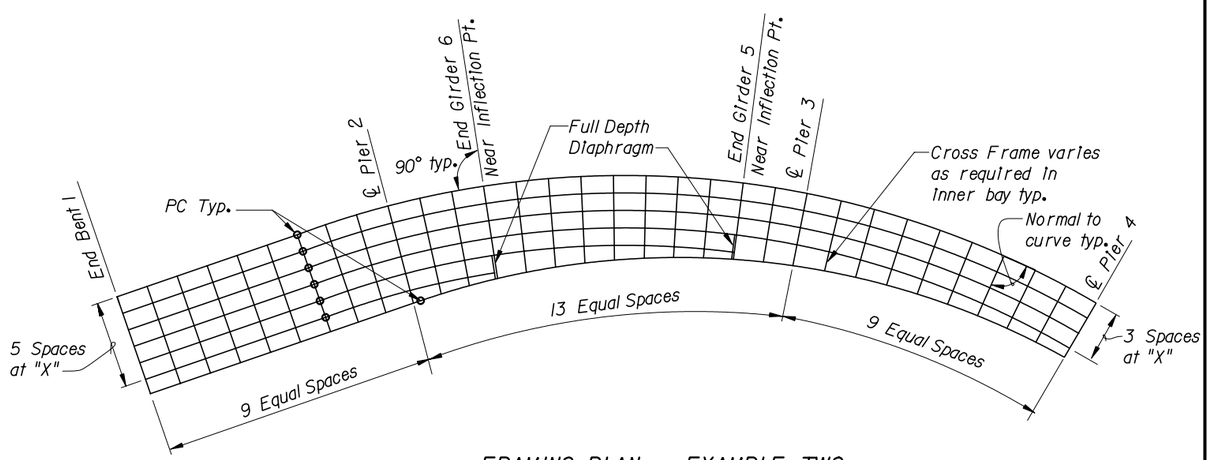

FRAMING PLAN - EXAMPLE TWO

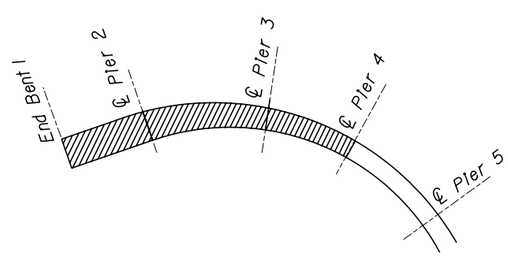

KEY PLAN

FRAMING PLAN - TAPERED RAMP:

Framing Plan - Tapered Ramp: It is desirable to utilize equally spaced beams with standard-sized crossframes where possible. For bridges with varying cross-sections, some variation in crossframes are required. When variable bridge widths are required, keep beam lines parallel and drop girder lines at or near inflection points instead of splaying girders. Under this layout only one bay varies. Although this framing scheme is more likely to require temporary support towers to facilitate fit-up it is simpler to fabricate and erect. It also saves material costs by reducing the total length of girder required.

Example One shows parallel girder lines on the inside of the curve. Example Two shows parallel girder lines on the outside of the curve. Effects of live load centrifugal forces and torsion make Example Two more desirable because all girder lines are more equally loaded.

DETAIL NAME:	SHEET NO.
EXAMPLE OF FRAMING DETAILS-TAPERED RAMP	S-22

1/27/2005 1:40:25 PM $(USTN_MACHINE)Computer_support\StructuresSoftware\StructuresManual\2005 JanGraphics\PreferredDetailsDGNs\steel_detail.dgn

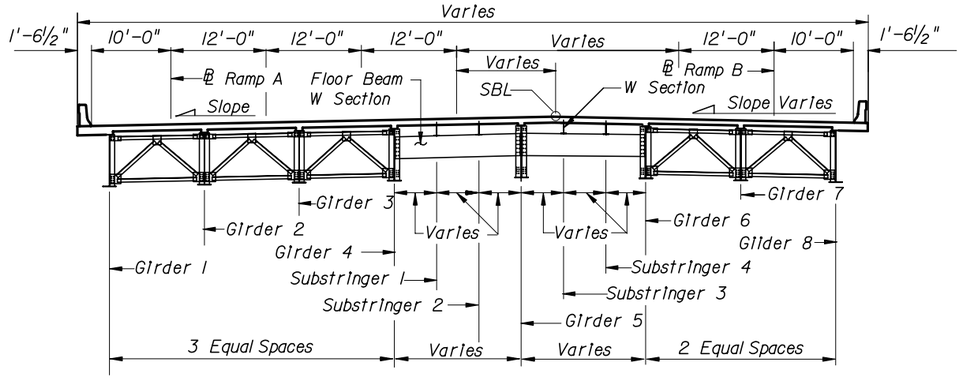

CROSS SECTION THRU GORE AREA

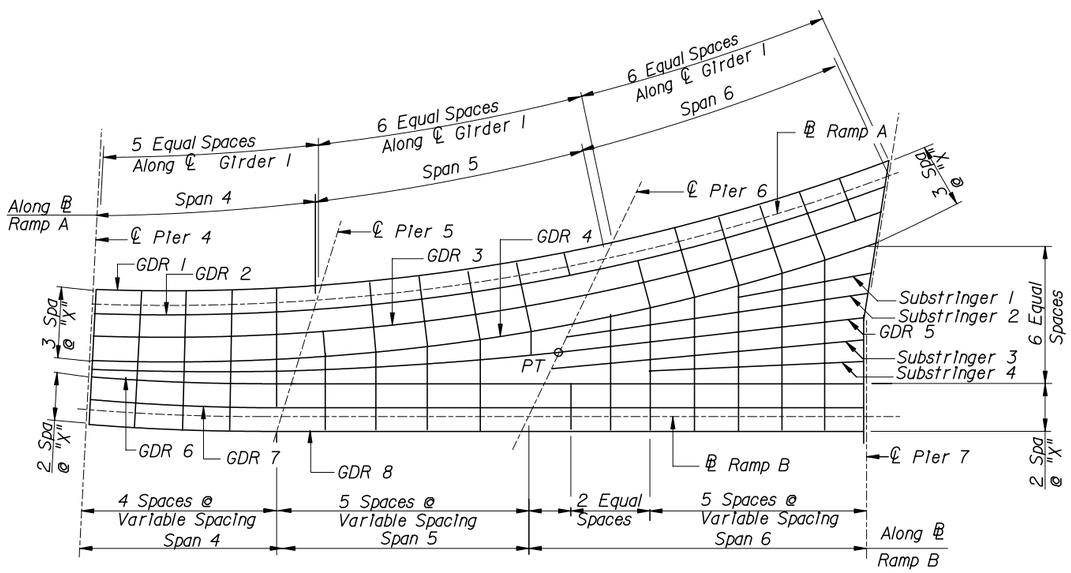

FRAMING PLAN GORE AREA

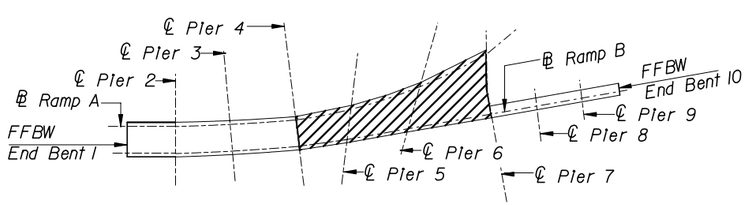

KEY PLAN

FRAMING PLAN - GORE AREA:

Framing Plan - Gore Area: It is desirable to utilize equally spaced beams with standard-sized crossframes where possible. For bridges with gore areas, some variation in girder spacing is necessary. For this case, consider keeping girders equally spaced where possible and use of a floor beam-substringer system in the gore area. The substringers can be splayed on top of floor beams as required. This eliminates the need for unique diaphragms in the splayed region. Under this option, The W Section floor beams vary in length as required.

A refinement to this framing plan would be to terminate GDR 5 at an inflection point in Span 4 or 5. The end of the girder would tie into a full depth diaphragm.

PROJECT NAME:
EXAMPLE OF FRAMING DETAILS GORE AREA

SHEET NO.
S-23

1/27/2005 1:44:54 PM $I_USTN_MACHINE\computer_support\StructuresSoftware\StructuresManual\2005 Jan\Graphics\PreferredDetailsDGNs\stgore.dgn

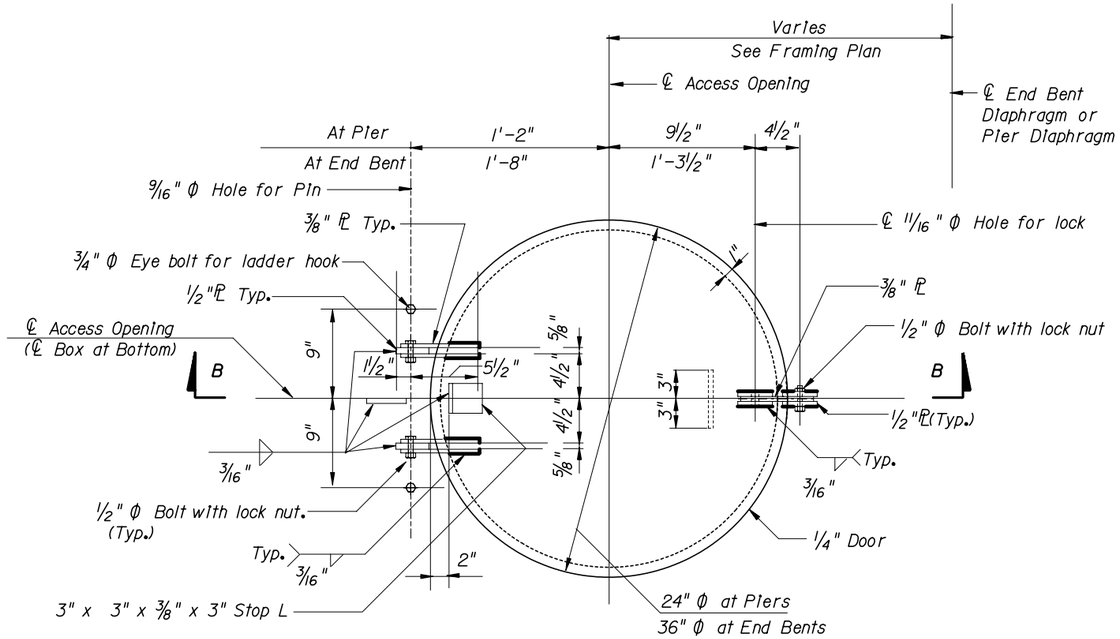

PLAN VIEW

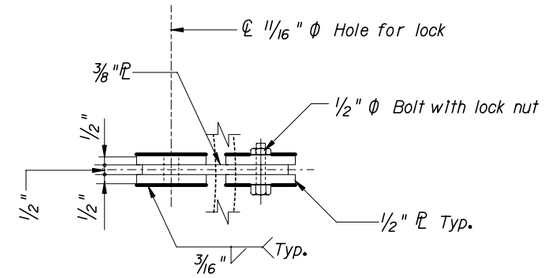

VIEW C-C

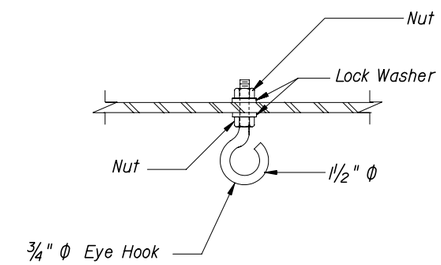

EYE HOOK DETAIL

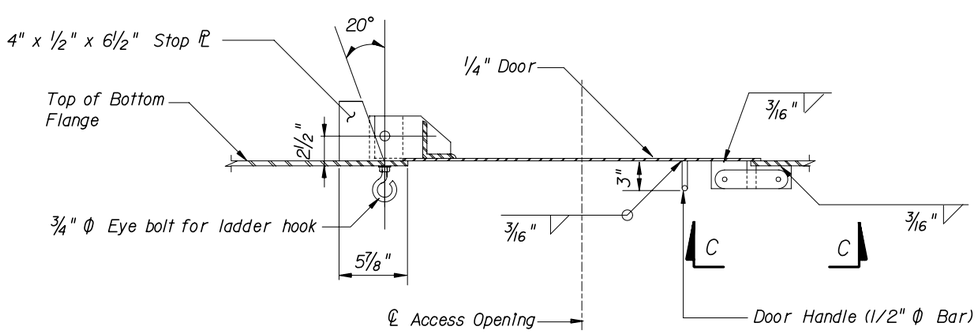

SECTION B-B

NOTES

For Access Opening location see Framing Plan.

FINISH: All exposed edges of plates and openings shall be ground smooth.

PROJECT NAME:	SHEET NO.
ACCESS OPENING DETAILS	S-24

2/4/2005 1:03:59 PM $I_USTN_MACHINE$Computer_support\StructuresSoftware\StructuresManual\2005 JanGraphics\PreferredDetailsDGNs\Accesshole.dgn

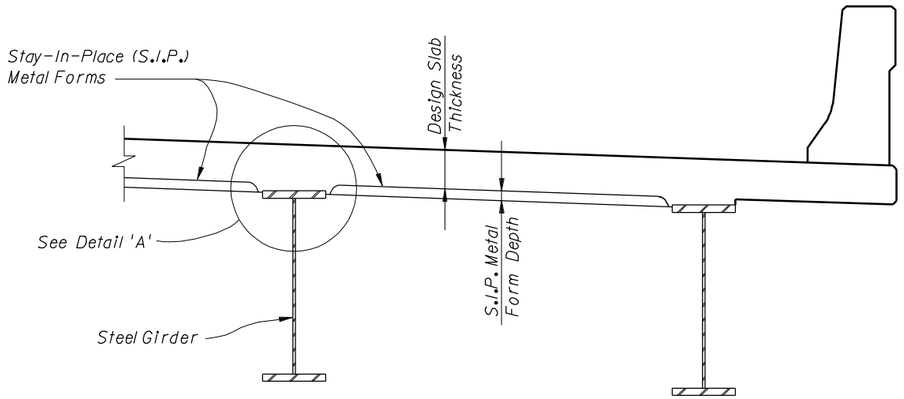

PARTIAL SECTION THRU SUPERSTRUCTURE
(Showing Typical Details and Notes for S.I.P. Metal Forms)

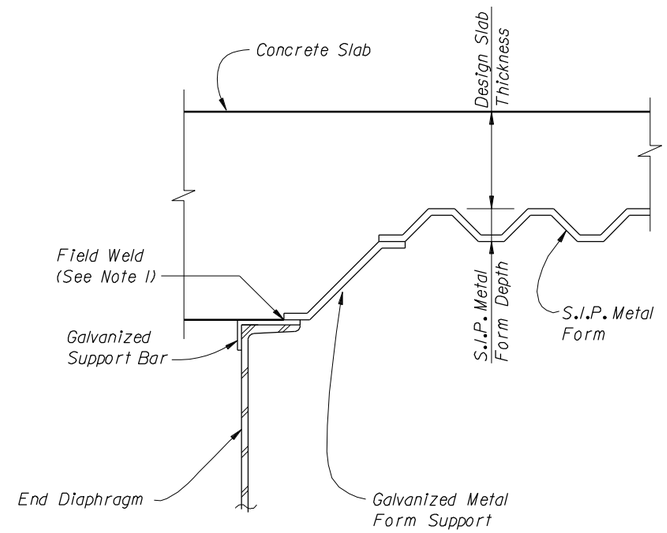

PARTIAL SECTION THRU END OF SPAN

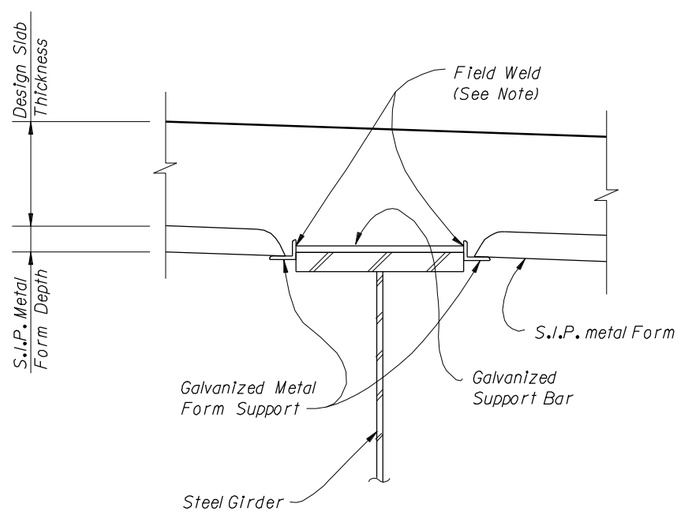

DETAIL 'A'

NOTE: Do not Weld to nor permit Weld Spatter on Supporting Steel Girders, Diaphragm, Bracing, etc. Electrical Grounding to Structural Steel is Prohibited. See Section 400 of the Specifications for Field Welding of S.I.P. Forms in place and Painting of the Top Flange.

Coordinate S.I.P. forms and box framing Shop Drawings. Ensure that S.I.P. forms will not conflict with top flange lateral bracing.

PROJECT NAME:	STAY-IN-PLACE METAL FORMS FOR STEEL GIRDERS	SHEET NO. S-25

7/28/2006 9:17:10 AM $I_USTN_MACHINE$IDsteel.dgn

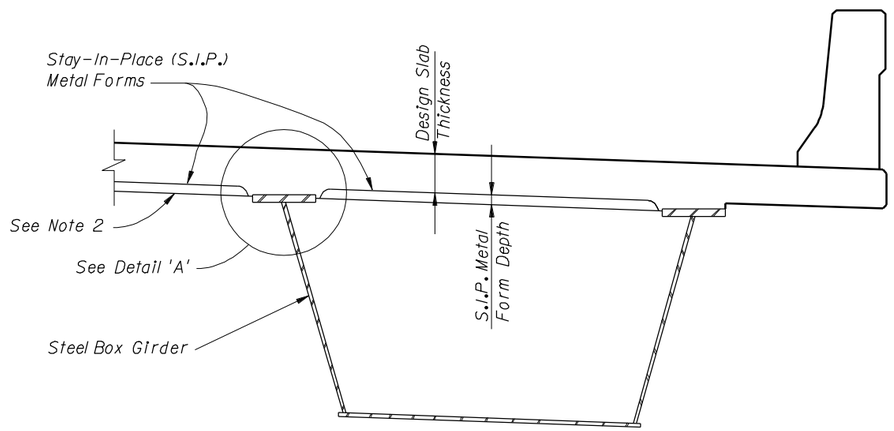

PARTIAL SECTION THRU SUPERSTRUCTURE
(Showing Typical Details and Notes for S.I.P. Metal Forms)

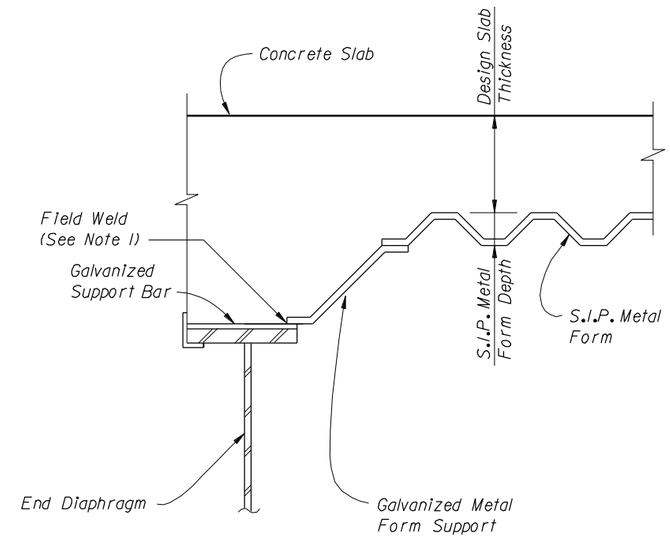

PARTIAL SECTION THRU END OF SPAN

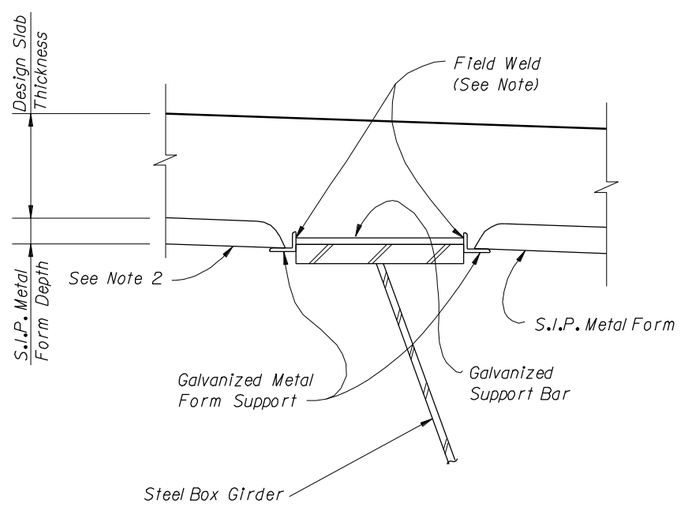

DETAIL 'A'

NOTE 1: Do not Weld to nor permit Weld Spatter on Supporting Steel Box Girders, Diaphragm, Bracing, etc. Electrical Grounding to Structural Steel is prohibited. See Section 400 of the Specifications for Field Welding of S.I.P. Forms in place and Painting of the Top Flange.

NOTE 2: As required by design, either a stay-in-place corragated galvanized metal form or a smooth removable form shall be used.

Coordinate S.I.P. forms and box framing Shop Drawings. Ensure that S.I.P. forms will not conflict with top flange lateral bracing.

PROJECT NAME:	STAY-IN-PLACE METAL FORMS FOR STEEL BOX GIRDERS	SHEET NO. S-26

7/28/2006 9:16:41 AM $I_USTN_MACHINE$Dsteel.dgn

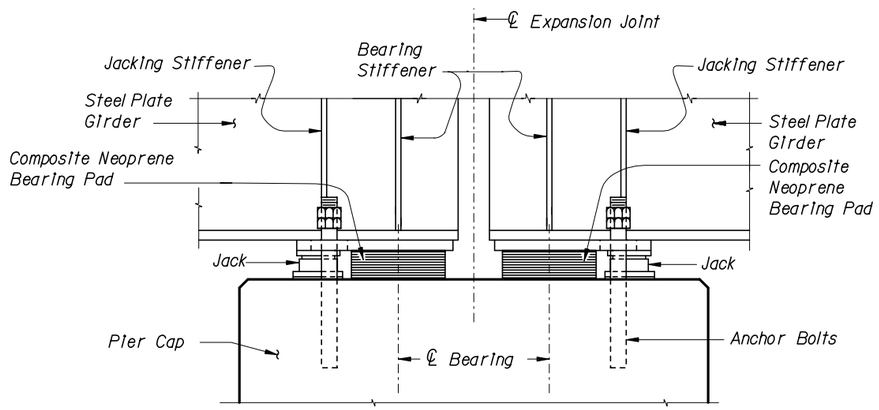

ELEVATION VIEW OF STEEL PLATE GIRDER

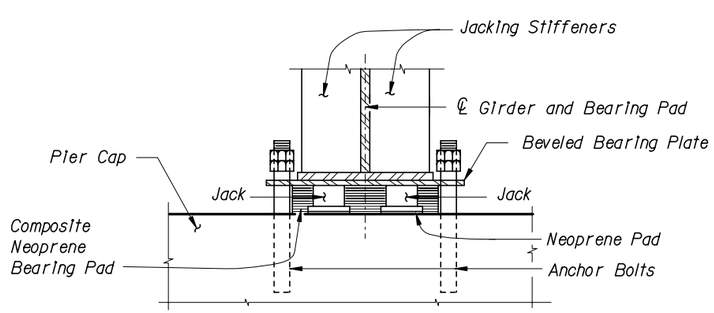

SECTION THRU STEEL PLATE GIRDER

PROJECT NAME:

BEARING REPLACEMENT-STEEL GIRDERS

SHEET NO.

S-27

1/27/2005 1:05:20 PM $I_USTN_MACHINE$Computer_support\StructuresSoftware\StructuresManual\2005 Jan\Graphics\PreferredDetailsDGNs\brgreplace.dgn

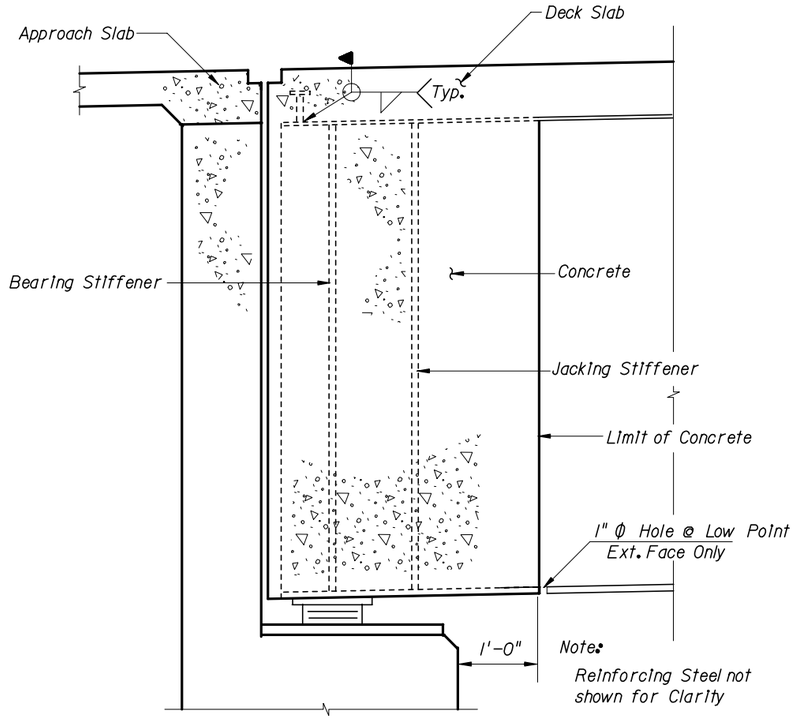

VIEW A-A AT END BENT
EXPANSION JOINT

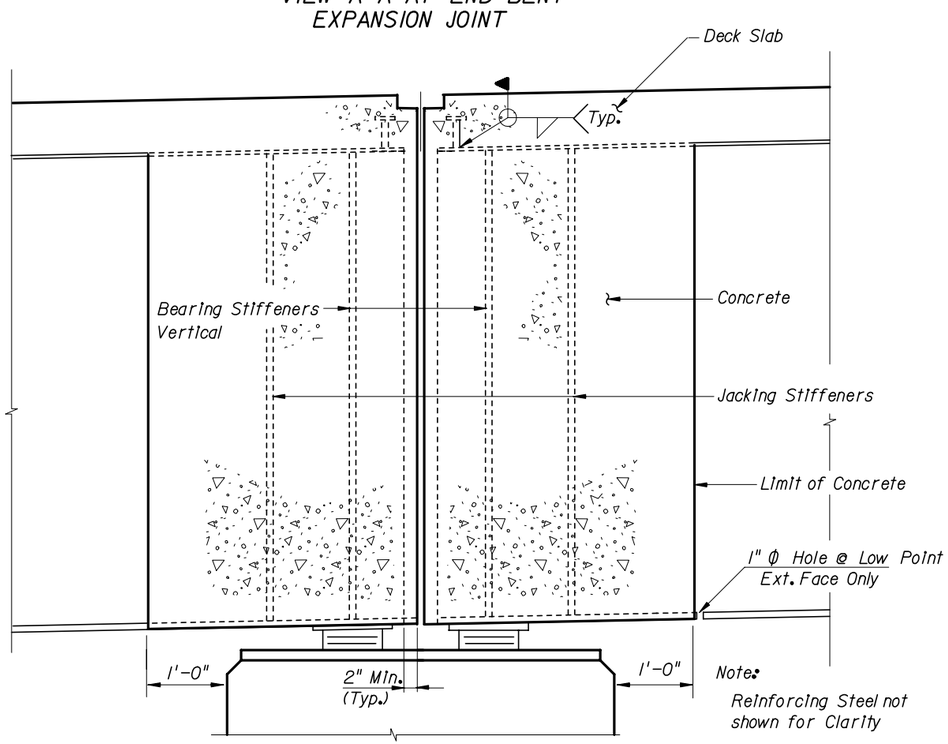

VIEW A-A AT PIER
EXPANSION JOINT

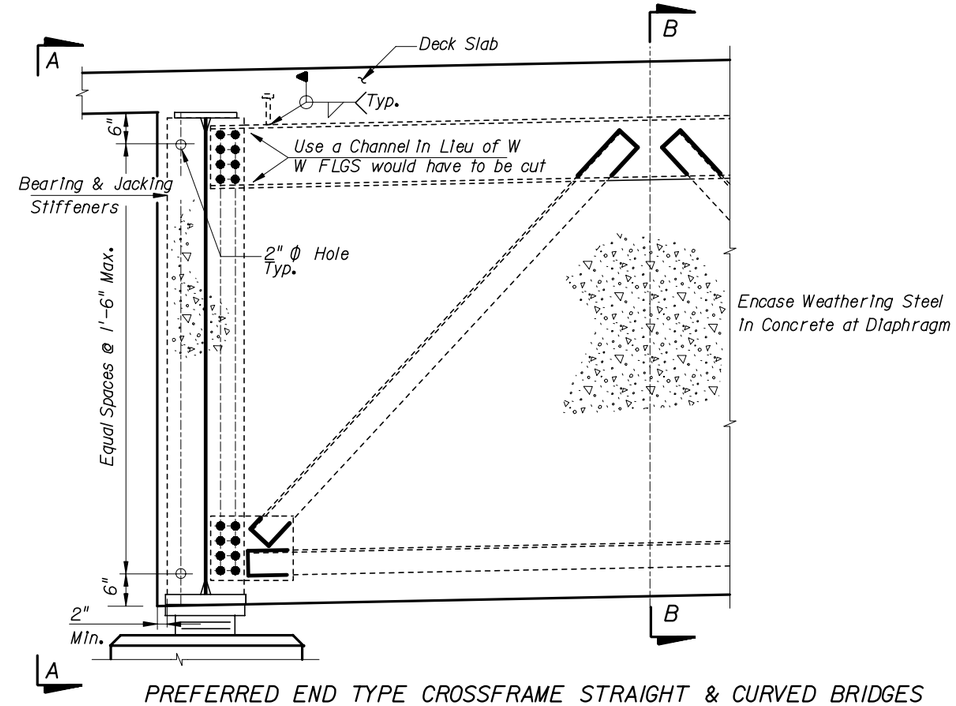

PREFERRED END TYPE CROSSFRAME STRAIGHT & CURVED BRIDGES
AT EXPANSION JOINT

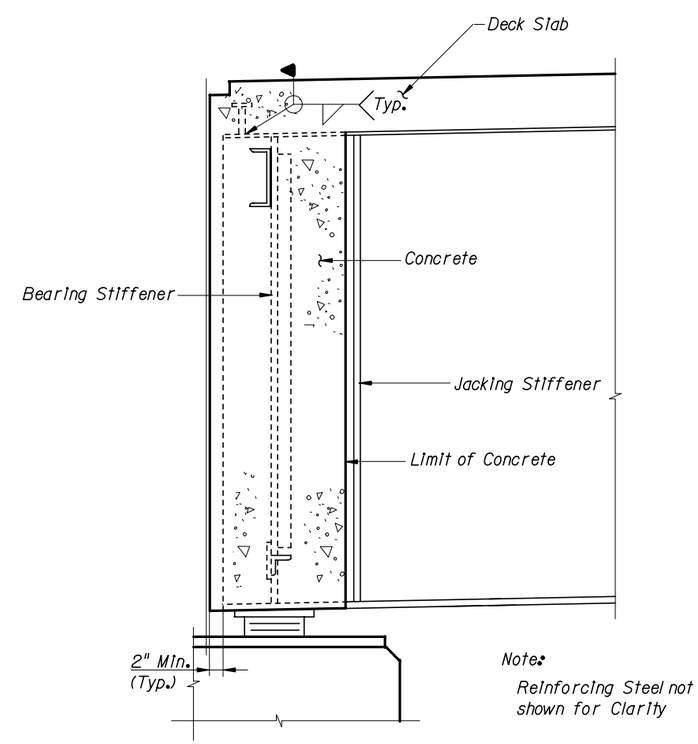

SECTION B-B

DETAIL NAME:
WEATHERING STEEL DETAILS

SHEET NO.
S-28

1/27/2005 1:49:04 PM $$_USTN_MACHINE$$ computer_support\StructuresSoftware\StructuresManual\2005 Jan\Graphics\PreferredDetailsDGNs\weatheringsteel.dgn

Detail Hook with proper Minimum Pin Size

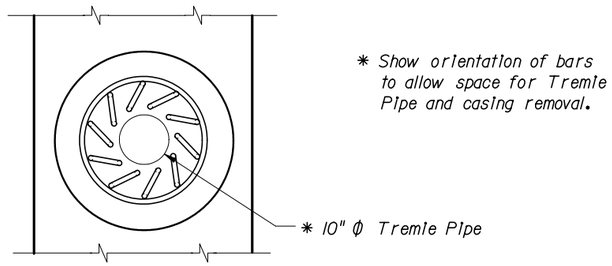

SECTION A-A

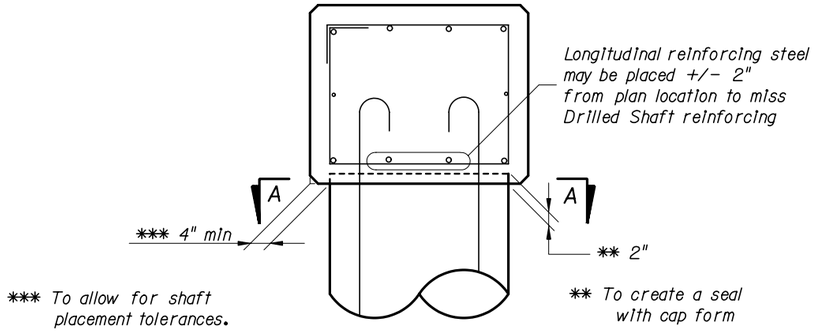

CROSS SECTION AT INTERMEDIATE BENTS

DESIGNERS NOTE:

Shaft-Column Details: Whereas columns are to be placed with zero tolerances, shafts can be built up to a +/- 3" out of place in accordance with the Standard Specifications. Plan details should accommodate worst-case tolerances. When caps are used, the caps should be sized accordingly. For single columns founded on single shafts, one solution may be to oversize the shaft size relative to the column size. Another solution may be to relax the column tolerance so that the drilled shaft and column can be built concentric. In the second case, the design should assume a worst-case placement.

Reinforcing Conflicts: Conflicts between the shaft steel and cap steel can sometimes be a problem during construction. It is recommended that a note be added to the plans, where possible, to allow the cap steel to be adjusted in the field where necessary.

Tremie Pipe Access and Casing Extraction: Reinforcing steel at the top of drilled shafts should be hooked only when necessary. Hooks, when required, should be oriented inward to facilitate casing removal. The hooks should also be detailed to allow for concrete placement. For smaller shafts, this may require rotating the hooks to allow tremie access.

DETAIL NAME: DRILLED SHAFT REINFORCING DETAILS

SHEET NO. S-29

1/27/2005 1:37:32 PM $I_USTN_MACHINE\computer_support\StructuresSoftware\StructuresManual\2005 Jan\Graphics\PreferredDetailsDGNs\shafts.dgn

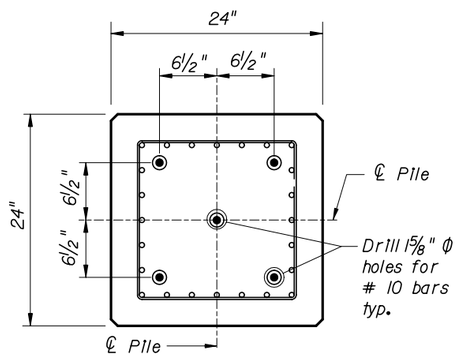

PLAN

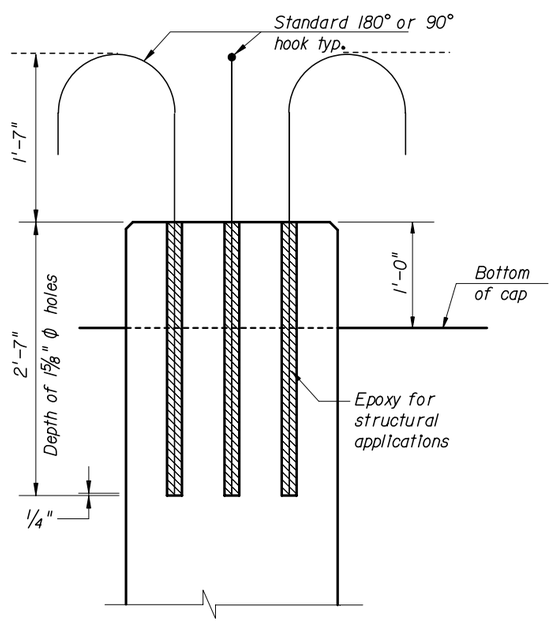

ELEVATION
TENSION PILE DOWEL DETAIL

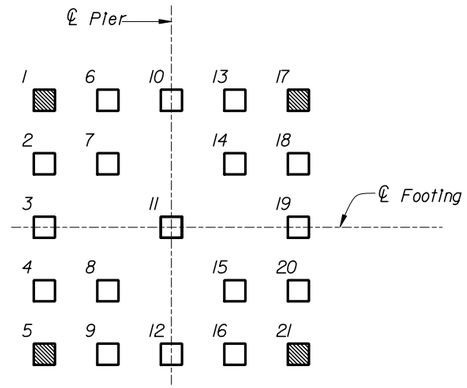

FOOTING TYPE I
PLAN VIEW

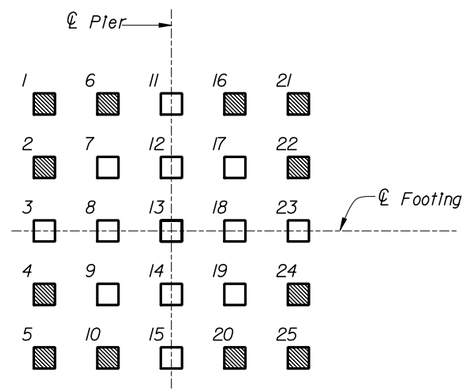

FOOTING TYPE II
PLAN VIEW

LEGEND

- 24" TENSION PILE
- 24" PILE
- 24" TEST PILE

All piles are plumb

FOOTING DETAILS

Tension Piles: For bridges with large lateral loads, it may be beneficial to utilize the tension capacity of the soil. This approach can serve to reduce the size of the footings. For land piers, when a 1'-0" pile embedment is utilized, a mechanical connection between the pile and cap is required to transmit tension loads. The Mechanical connection should be designed based on project requirements. The detail shown is for example only.

Group Footings: It is also useful to group pier footings within a project, when possible, to maximize the reuse of reinforcing jigs, formwork and driving templates. Pulling piles from a standard pile grid is one way to achieve this. Least materials is not always least cost. Labor costs and material costs need to also be considered.

DETAIL NAME: FOOTING DETIALS

SHEET NO. S-30

1/27/2005 1:13:12 PM $I_USTN_MACHINE\computer_support\StructuresSoftware\StructuresManual\2005 Jan\Graphics\PreferredDetailsDGNs\footing.dgn

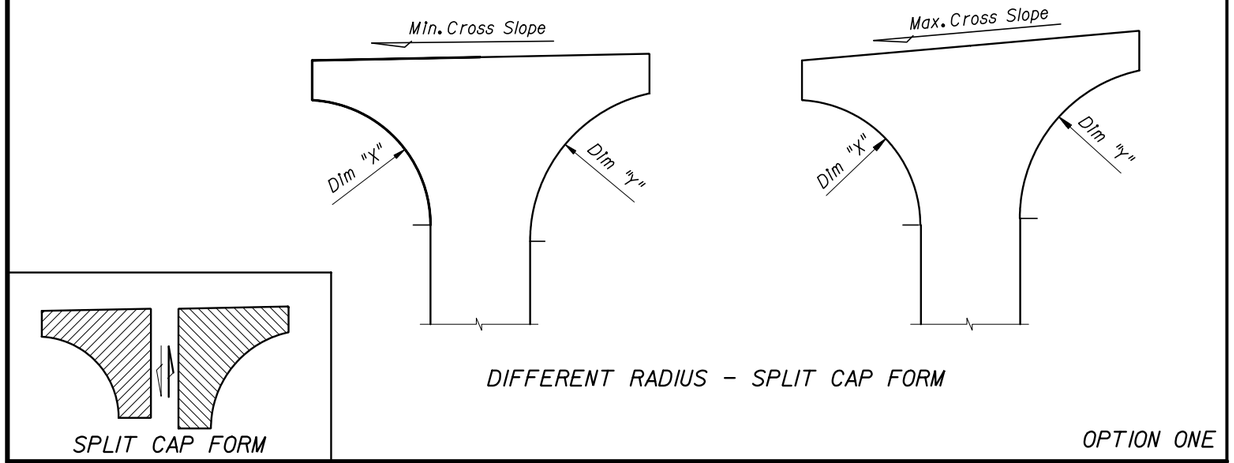

DIFFERENT RADIUS - SPLIT CAP FORM

OPTION ONE

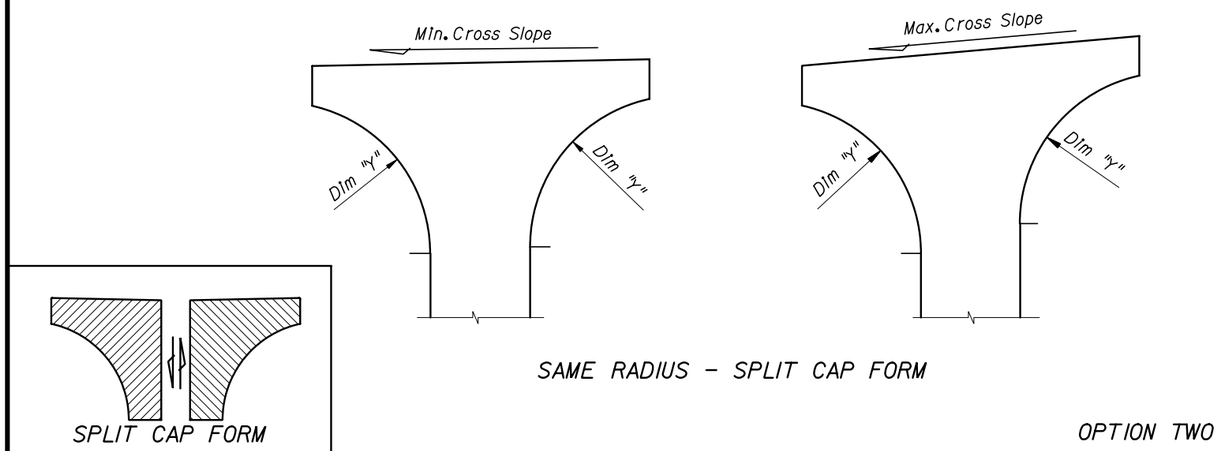

SAME RADIUS - SPLIT CAP FORM

OPTION TWO

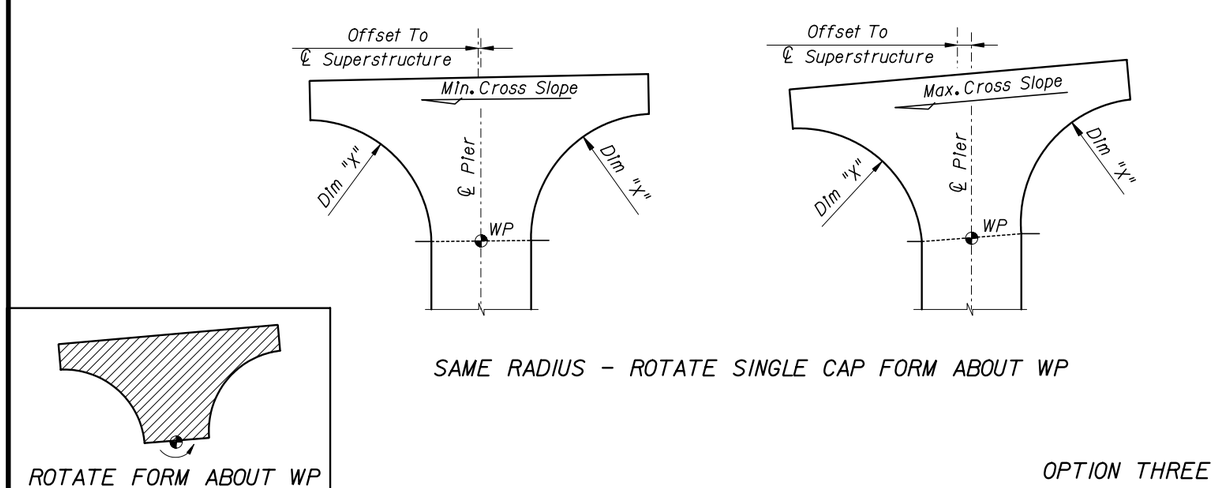

SAME RADIUS - ROTATE SINGLE CAP FORM ABOUT WP

OPTION THREE

PIER SHAPE:

For multi-pier interchanges it is important to utilize pier shapes that make best use of formwork and reinforcing details, while balancing aesthetics. This is especially difficult when the pier cross slopes vary due to superelevated curved ramps. When curved hammerhead piers are utilized with varying cross slopes, three methods of detailing are normally employed.

Option One utilizes two split forms of differing radii. Under this option, the forms are lowered or raised to accommodate the varying cross slopes. Although many of the reinforcing cages are similar, they vary based on the cross slope. The two radii are chosen based on aesthetics and the cross slope extremes.

Option Two is similar to Option One except that the radii are the same. This option has the same advantages and disadvantages as option one above, however the aesthetics may not be as desirable depending on the cross slope variation.

Option Three utilizes a single cap form. Under this option, the form is rotated about a working point at its base. The cage steel for all piers is the same or similar based on the loads. This option introduces a slight P.I. at the column/radius interface and requires the superstructure and substructure to be offset slightly based on the given cross slope.

Of the three options, Option Three is preferred based on its simplicity and aesthetic value.

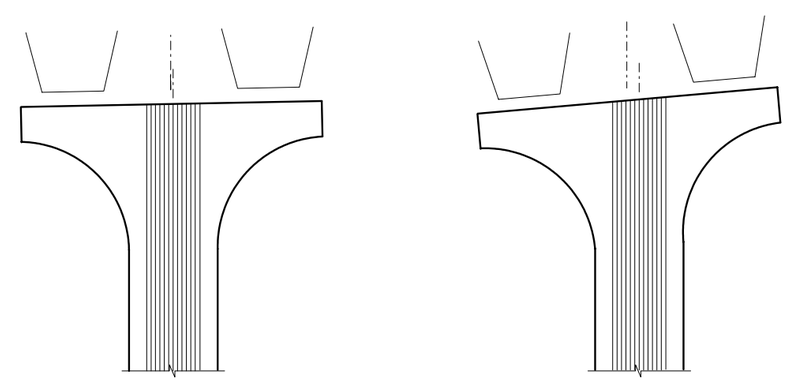

MIN. CROSS SLOPE

MAX. CROSS SLOPE

EXAMPLE OPTION THREE

(under this option the pier is rotated at a point as the cross slope changes)

DETAIL NAME: CURVED HAMMERHEAD PIERS - VARYING CROSS SLOPES (BOXES OR I-GIRDERS)

SHEET NO. S-31

1/27/2005 1:30:55 PM $(_USTN_MACHINE)Computer_support\StructuresSoftware\StructuresManual\2005 Jan\Graphics\PreferredDetailsDGNs\pier_detail.dgn

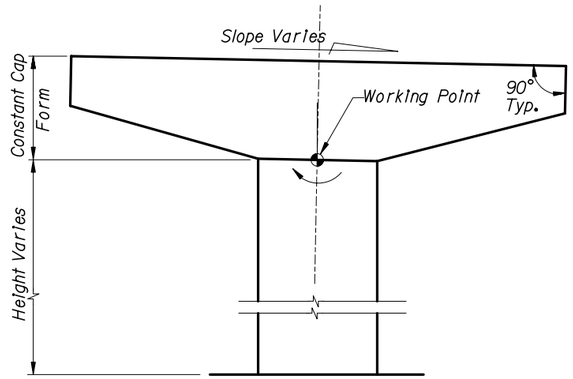

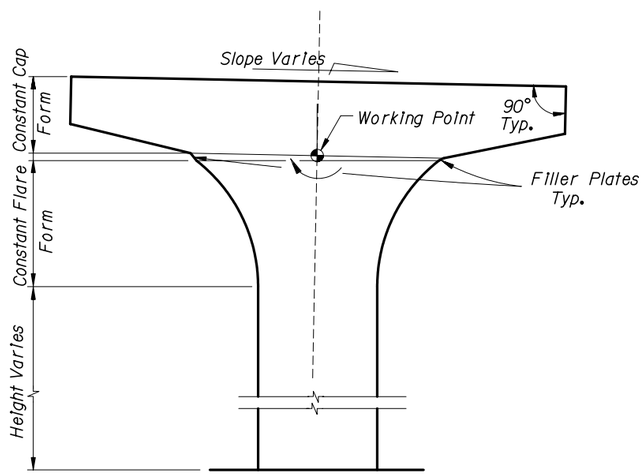

ROTATE SINGLE CAP FORM ABOUT WORKING POINT

PIER SHAPE:

For multi-pier interchanges it is important to utilize pier shapes that make best use of form work and reinforcing details, while balancing aesthetics. This is especially difficult when the pier cross slopes vary due to superelevated curved ramps. When curved hammerhead piers are utilized with varying cross slopes.

The two examples shown utilize a single cap form rotated about a working point at its base. In either case, the cage steel for all piers is the same or similar based on the loads. The cap should be sized based on the largest cross slope with the pedestal locations adjusted as required.

DETAIL NAME: HAMMERHEAD PIERS - VARYING CROSS SLOPES (BOXES OR I-GIRDERS)

SHEET NO. S-32

1/27/2005 1:31:53 PM $t_USTN_MACHINE$t_computer_support\StructuresSoftware\StructuresManual\2005 JanGraphics\PreferredDetailsDGNs\pier_detail.dgn

* Space cap reinforcing to miss preformed anchor bolt holes, drainage pipes, and to allow for concrete placement.

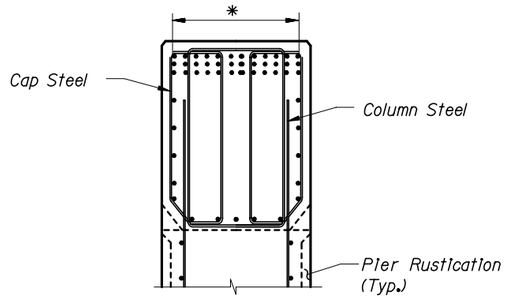

SECTION THROUGH CAP
Case Showing Flush Pier Face w/ Rustication

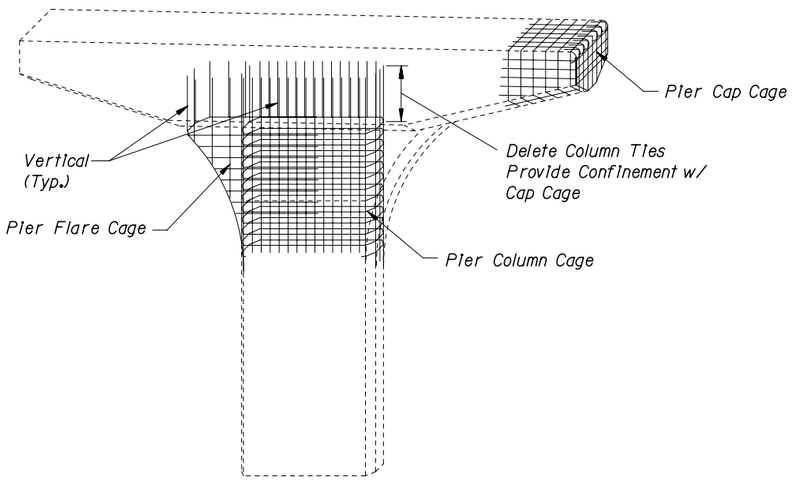

REINFORCING STEEL - PICTORIAL VIEW

REINFORCING DETAILS - HAMMERHEAD PIERS
Case Showing Flush Pier Face w/ Rustication

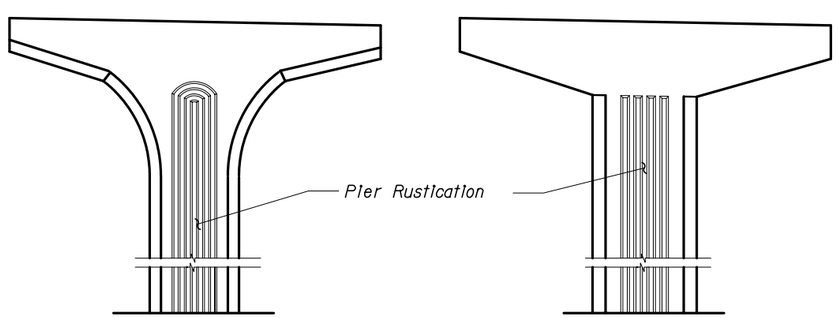

ELEVATION VIEW - HAMMERHEAD PIERS
Case Showing Flush Pier Face w/ Rustication

PREFABRICATION OF STEEL CAGES FOR HAMMERHEAD PIERS

It is desirable to standardize pier reinforcing where possible for the maximum reuse of reinforcing jigs. Details which allow the steel cages to be tied on the ground and lifted into the form by crane are preferred. This requires that the pier cap be six inches wider than the column so that the column steel can extend inside the cap steel. Another method is to allow the column rustication to terminate at the column/cap interface. As a general rule all pier lap reiforcing should be vertical where possible to facilitate lowering adjoining cage.

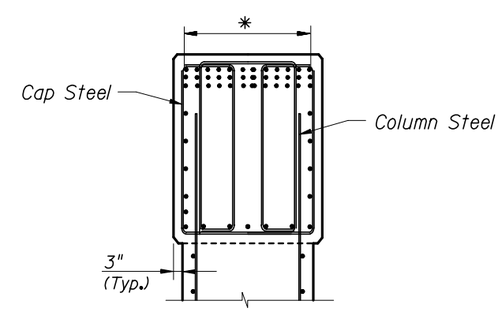

SECTION THROUGH CAP
Case Showing Cap 6" Wider than Column

DETAIL NAME: HAMMERHEAD PIER DETAILS

SHEET NO. S-33

1/27/2005 1:30:15 PM $(_USTN_MACHINE)Computer_support\StructuresSoftware\StructuresManual\2005 Jan\Graphics\PreferredDetailsDGNs\pier_detail.dgn

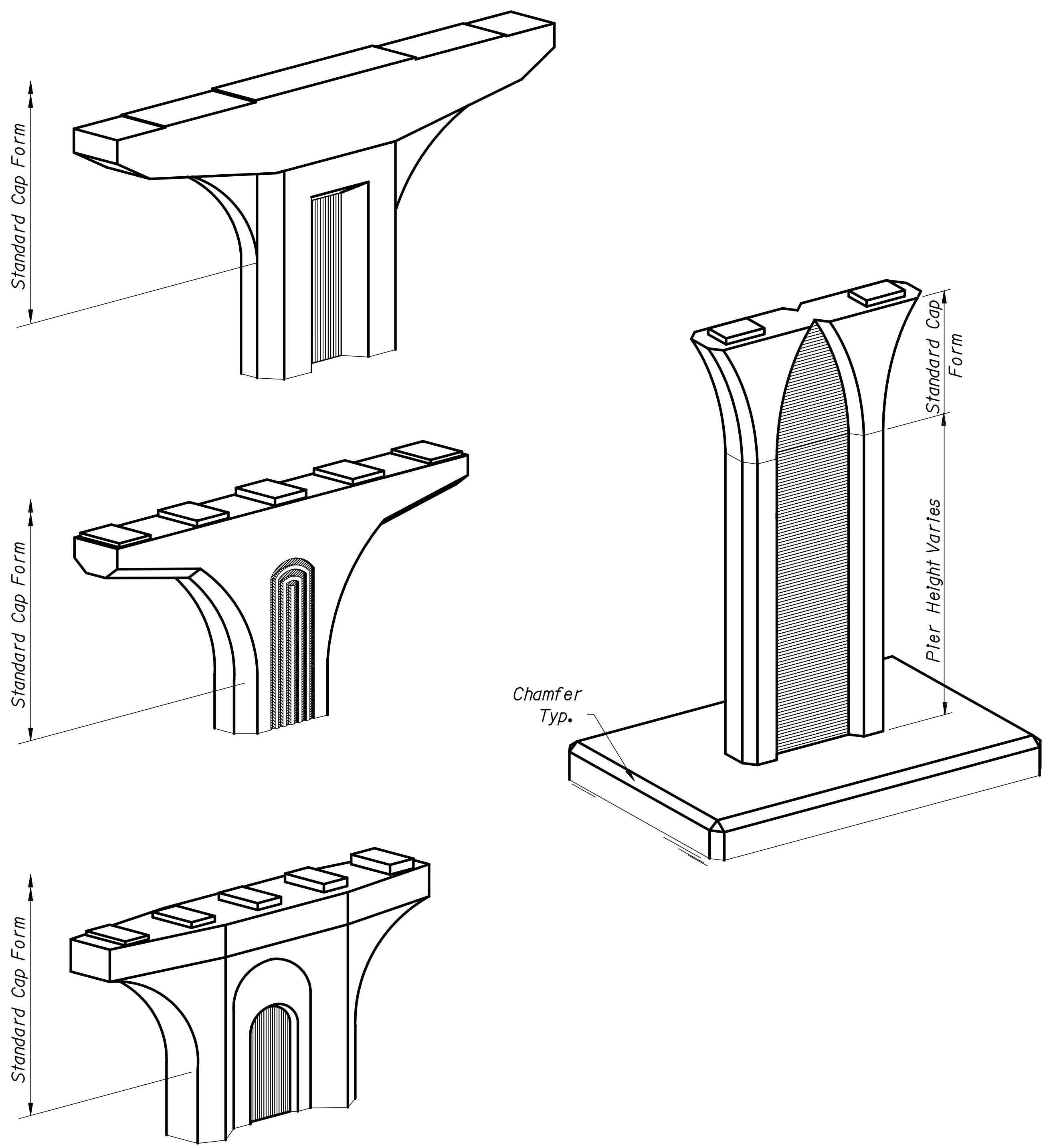

PIER AESTHETICS

On bridges requiring many piers , it is desirable to standardize the piers throughout so that the formwork can be reused. Generally bridge aesthetics can best be achieved through pier shapes. If pier forms can be reused on a project, the cost of an aesthetic form is normally a small percentange of the overall cost. The best approach is to utilize a constant column section which varies in height as required.

It is important to look at both the tallest pier and the shortest pier before selecting a pier shape.

Consideration should be given to increasing the chamfer sizes on large concrete elements to improve on the large blocky appearance. Examples include exposed pile caps and large bridge pier columns and caps.

DETAIL NAME:	SHEET NO.
PIER AESTHETICS (SHEET 1 OF 2)	S-34

1/27/2005 1:32:39 PM $(_USTN_MACHINE)\Computer_support\StructuresSoftware\StructuresManual\2005 Jan\Graphics\PreferredDetailsDGNs\pier_detail.dgn

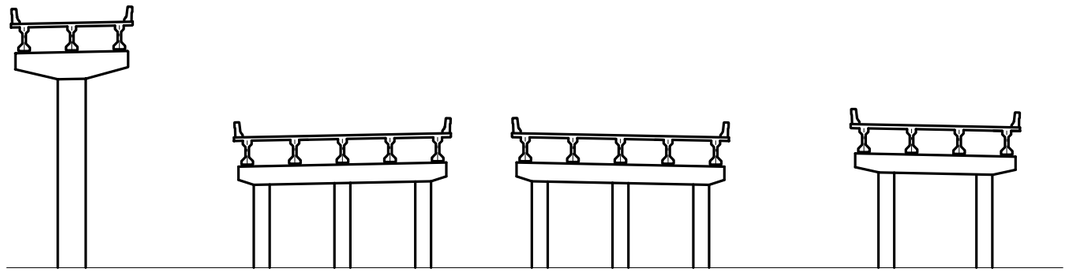

PIER ALTERNATE 1

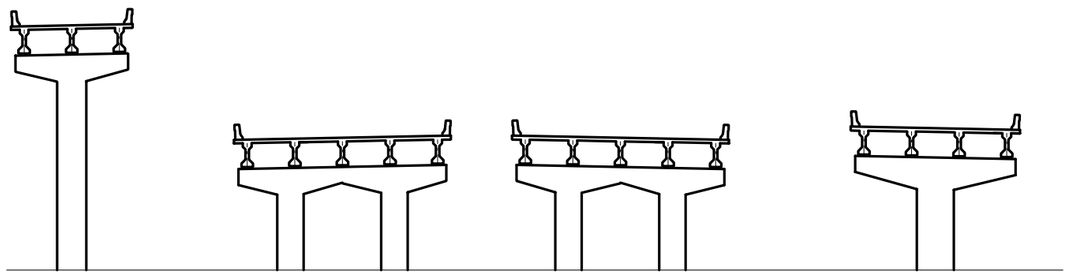

PIER ALTERNATE 2

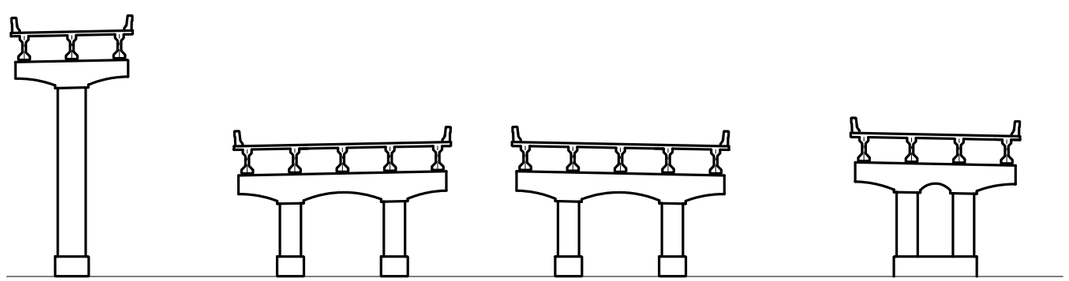

PIER ALTERNATE 3

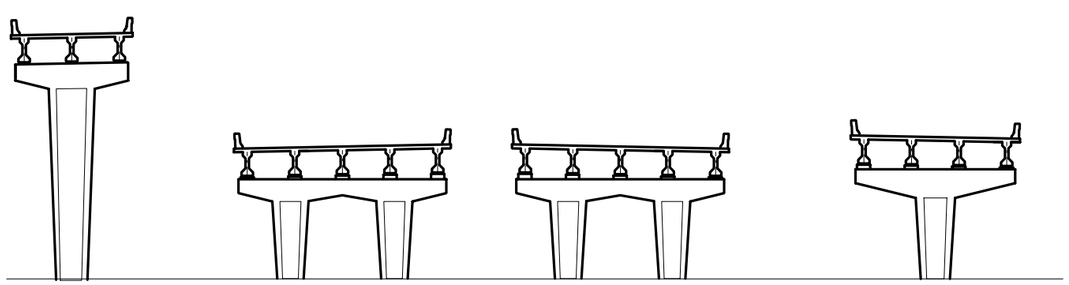

PIER ALTERNATE 4

FAMILY OF PIERS

PIER AESTHETICS

Uniformity of pier shapes within a project is preferred due to constructibility as well as aesthetic reasons. This can be a difficult task on projects with variable pier heights and widths. Pier Alternates 1 through 4 are examples of how uniformity within a project can be achieved when pier heights and widths vary. Projects with multiple structural types also introduce design challanges from an aesthetic point of view.

The best approach is to first determine the various substructure arrangements required, then determine the other factors which will affect the selection of the substructure details. Site specific issues also have to be consisdered. Are the bridges to be viewed at 65 miles per hour or 35 miles per hour. Is there high pedestrian traffic at the site. Are the bridges to be viewed from far away or up close. These are key questions to be asked when determining the detail required in the pier design. Cost effective solutions dictate that the level of detail and aesthetic treatment utilized be commensurate with the site requirements.

Costs associated with pier construction is often related to the Contractor's ability to reuse formwork, reinforcing jigs and utilize assembly line construction techniques. The pier details need to be consistant with this approach when possible. Grouping of piers within a large project is also beneficial.

DESIGNERS NOTE: It is generally desirable to make the substructure appear slightly heavier than required and to make the superstructure appear as light and streamlined as possible.

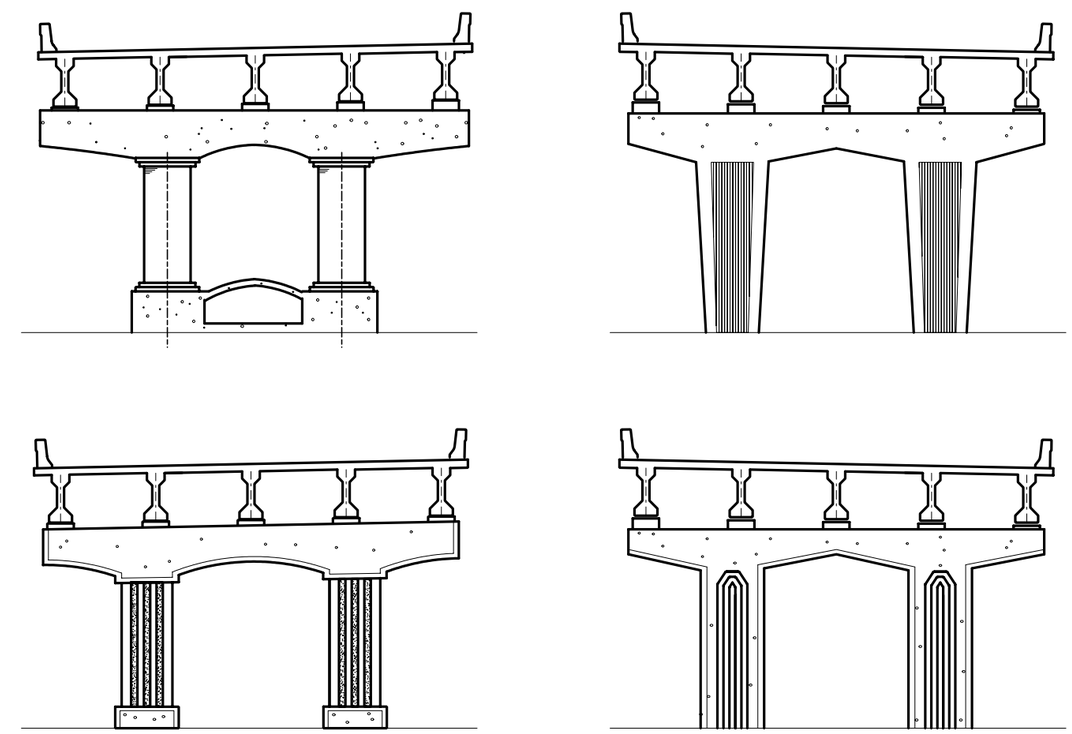

EXAMPLE PIER SHAPES

DETAIL NAME: PIER AESTHETICS (SHEET 2 OF 2)

SHEET NO. S-35

1/27/2005 1:33:11 PM $(_USTN_MACHINE)Computer_support\StructuresSoftware\StructuresManual\2005 Jan\Graphics\PreferredDetailsDGNs\pier_detail.dgn

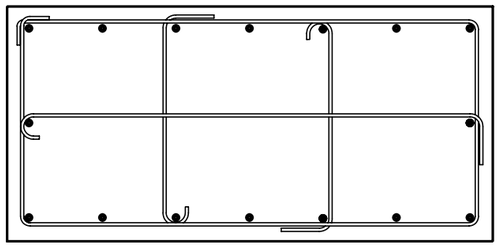

COLUMN CROSS SECTION

PREFERRED

AVOID

PREFERRED COLUMN TIE DETAIL

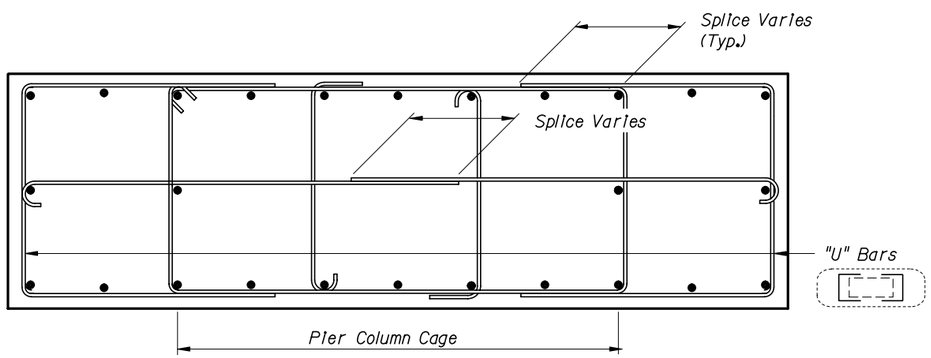

COLUMN CROSS SECTION AT FLARE

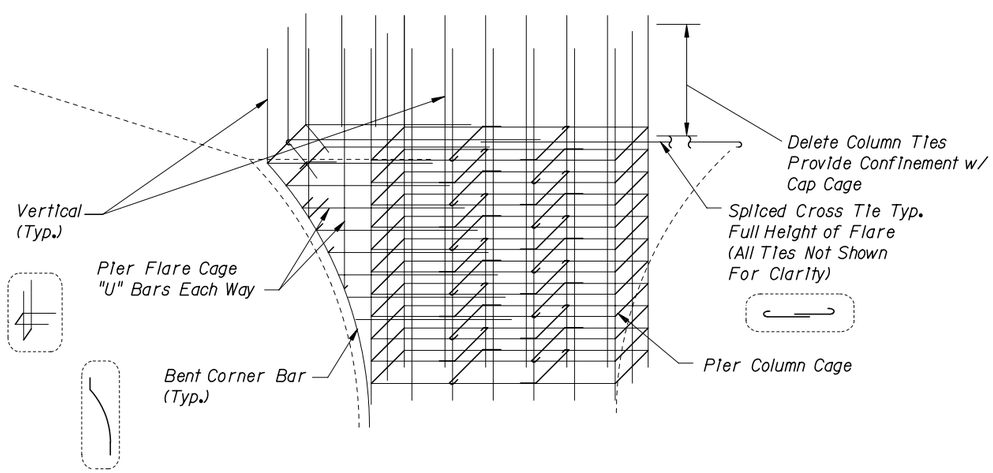

PARTIAL PICTORIAL VIEW COLUMN CAGE AT FLARE

VARIABLE CONCRETE REINFORCING DETAIL

PIER REINFORCING DETAIL:

Column cross-ties with 180-degree hooks at each end of the bar are difficult to place. The preferred method is to have a 90-degree hook at one end. This allows the bar to be rotated into position making fabrication of the column cage easier.

Variable width pier columns are difficult to detail. Consideration should be given to extending the typical pier column cage through the flared section and detailing the flare with "U" bars. Horizontal "U" bars may be detailed with a constant mark by varying laps.

This detail is not appropriate when plastic hinging due to ship impact or high seismic loads are anticipated because the concrete cover may spall making the standard lap of the "U" bars unacceptable.

Unless plastic hinging is anticipated, standard hoops may be used on circular columns provided that the ties are rotated so the lap splice location varies throughout the length of the column.

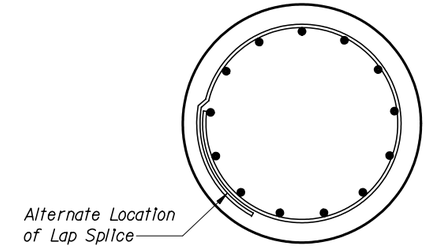

CIRCULAR COLUMN CROSS SECTION

DETAIL NAME:	SHEET NO.
PIER REINFORCING DETAILS	S-36

1/27/2005 1:29:49 PM $(_USTN_MACHINE)\computer_support\StructuresSoftware\StructuresManual\2005 Jan\Graphics\PreferredDetailsDGNs\pier_detail.dgn

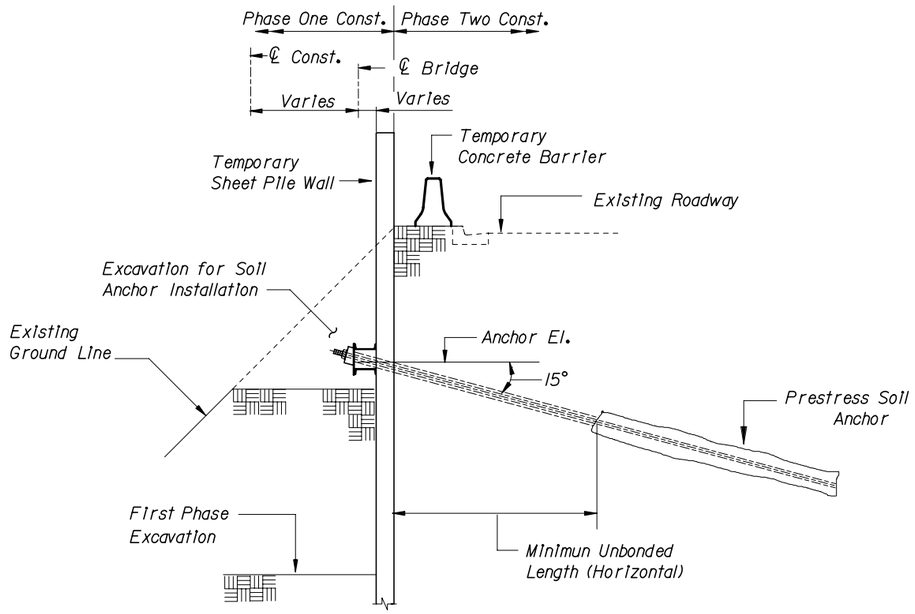

EXCAVATION AND SOIL ANCHOR INSTALLATION
FOR PHASE ONE CONSTRUCTION

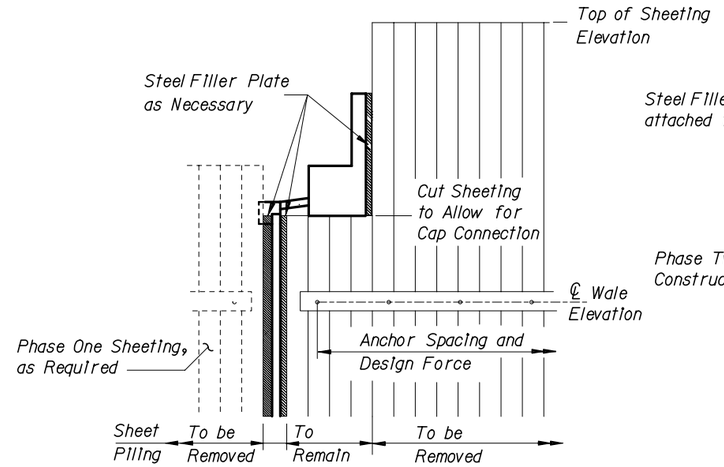

SECTION THROUGH BRIDGE END BENT
PHASE ONE

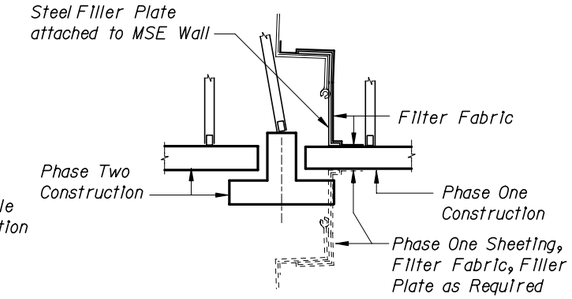

PLAN VIEW MSE WALL
SLIP JOINT DETAIL

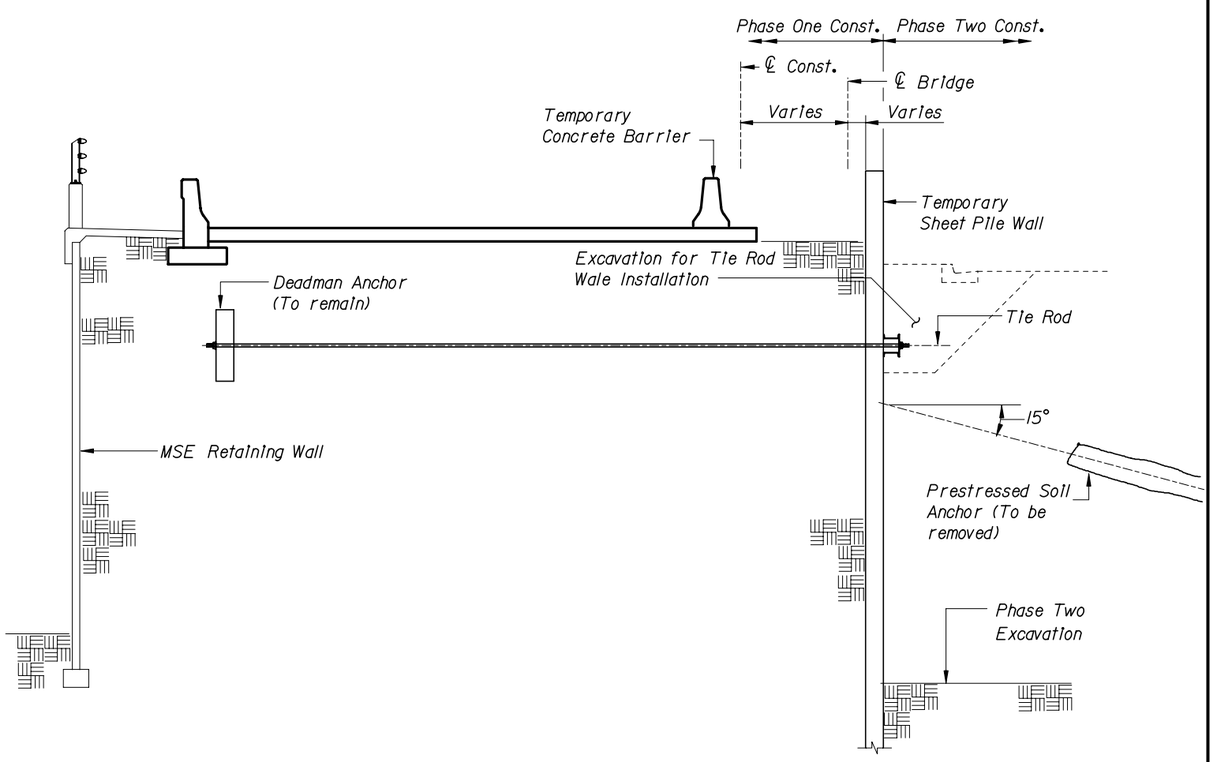

COMPLETION OF PHASE ONE CONSTRUCTION AND
EXCAVATION FOR PHASE TWO CONSTRUCTION

TEMPORARY WALL DETAILS TO FACILITATE PHASED CONSTRUCTION
OF MSE WALLS AT BRIDGE ENDS

In many cases, maintaining traffic on bridge replacement project necessitates phasing the bridge construction. This can be especially difficult in cases where MSE walls are being proposed under the new structure. The difficulty arises because the existing fill has to be removed to the leveling pad elevation in the vicinity of the bridge so soil reinforcement can be placed. Also the temporary wall heights usually necessitates an anchored system. The details shown depict soil anchors and dead man anchors for this purpose. Soil nails can also be utilized.

CONSTRUCTION NOTES

Install Sheet Piling, start sheeting installation at proposed MSE wall interface. Excavate existing fill slope to just below soil anchor wale location. Install and proof test soil anchors. Care should be taken to miss existing bridge piling. Excavate to the leveling pad elevation. Install the phase one MSE wall. Place dead man anchors and rods into MSE soil volume. Cut sheeting to bottom of end bent cap elevation to allow for cap connection. Once the phase one wall and bridge is complete, move traffic onto new structure. Excavate existing fill to the Phase Two leveling pad elevation. Install phase two MSE wall. Once wall construction proceeds to the deadman anchor elevation, remove wale and cut anchor. Complete phase two MSE Wall construction. Remove all temporary sheet piling except that the sheeting located directly under the end bent cap should remain.

PROJECT NAME:	SHEET NO.
TEMPORARY SHEET PILE WALLS PHASED CONSTRUCTION AT BRIDGE ENDS	S-37

1/27/2005 1:47:58 PM $(_USTN_MACROS)computer_support\StructuresSoftware\StructuresManual\2005 Jan\Graphics\PreferredDetailsDGNs\stwalltemp.dgn

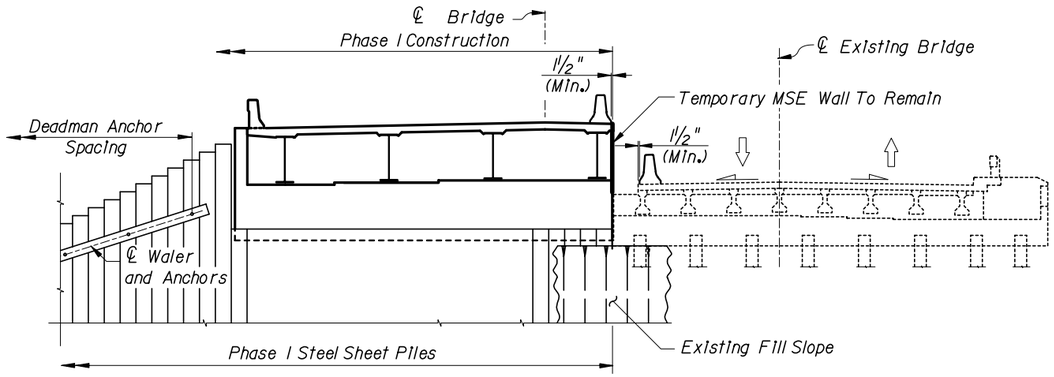

PHASE I CONSTRUCTION

1. Drive Prestressed Concrete End Bent Piles.
2. Drive Steel Sheet Piles and construct Deadman Anchors.
3. Construct Phase I portion of new Bridge and Approach Slabs and place approach fill material and temporary MSE wall.

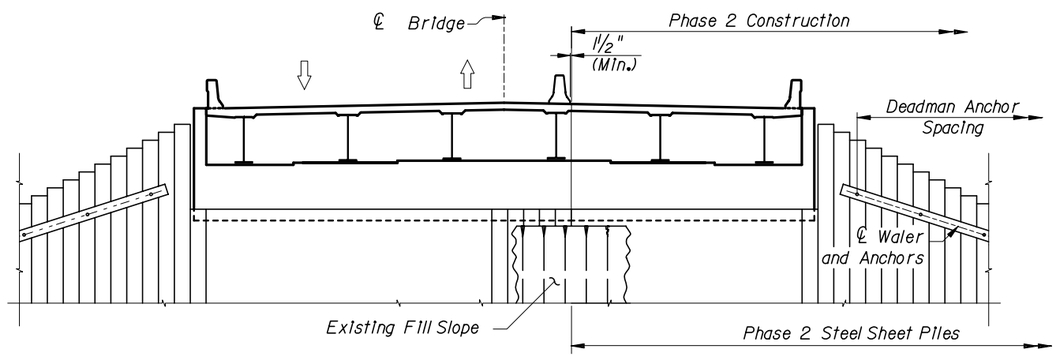

PHASE 2 COSTRUCTION

1. Move traffic onto Phase I Bridge and remove existing bridge.
2. Drive Prestressed Concrete End Bent Piles.
3. Drive Steel Sheet Piles and construct Deadman Anchors.
4. Construct Phase 2 portion of new Bridge and Approach Slabs and place approach fill material.

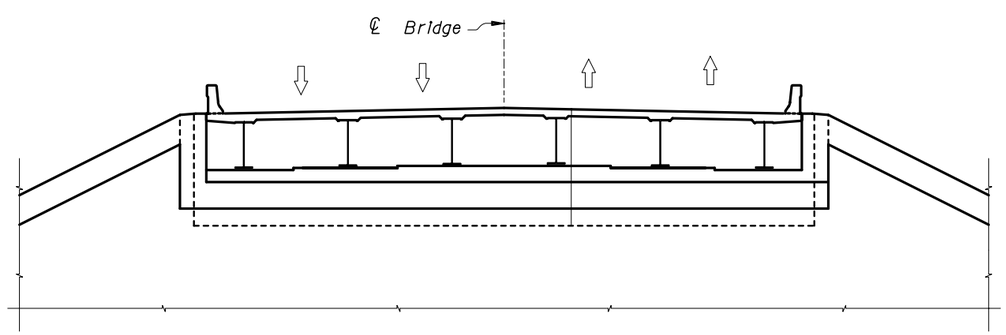

PHASE 3 CONSTRUCTION

1. Excavate fill slope.
2. Attach shear studs to steel sheet pile wall, and construct concrete facing and cap.

CONSTRUCTION SEQUENCE

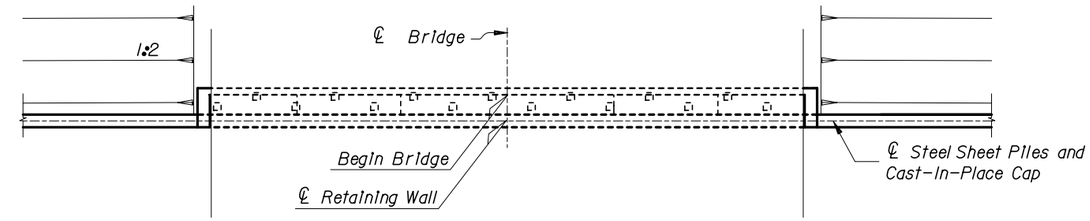

PLAN VIEW

STEEL SHEET PILE WALL WITH CIP FACING AT BRIDGE ENDS

On bridge replacement projects that require phase construction, a permanent steel sheet pile wall with a cast-in-place concrete facing may be a cost effective solution when walls are required at bridge ends, but where wrap around walls are not necessary.

Under these conditions, MSE walls may more costly to construct because of the difficulty in placing straps. Anchored temporary walls using grouted soil anchors and deadmen anchors are normally required because of the grade separations involved.

DETAIL NAME:
SHEET PILE WALL WITH CIP FACING

SHEET NO.
S-38

1/27/2005 1:48:18 PM $(USTN_MACHINE)computer_support\StructuresSoftware\StructuresManual\2005 JanGraphics\PreferredDetailsDGNs\sfwallfemp.dgn

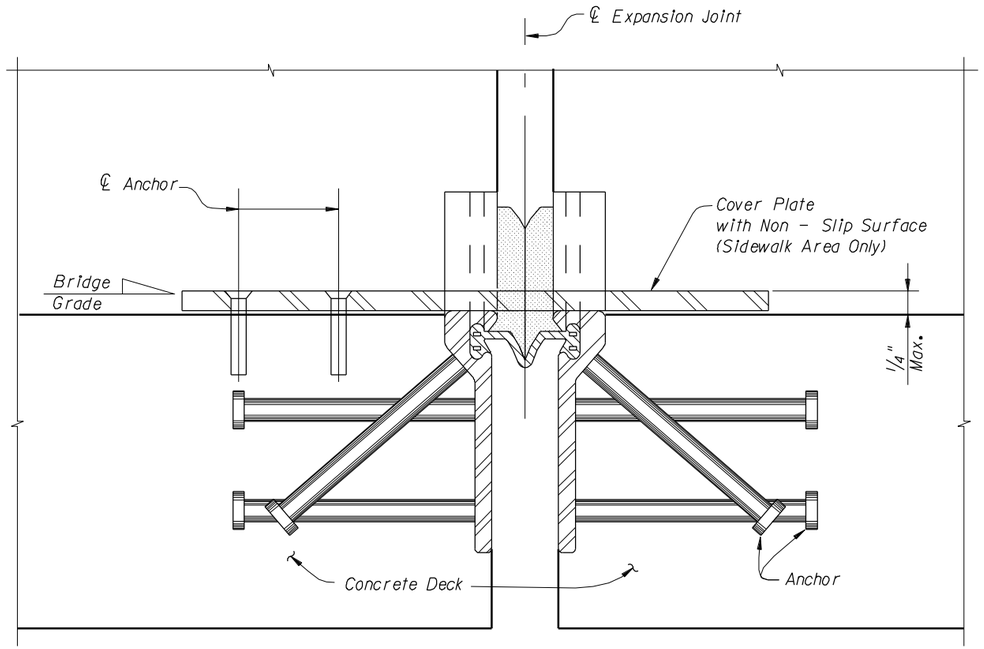

SECTION THRU STRIP SEAL EXPANSION JOINT
WITHIN LIMITS OF SIDEWALK
(POURED JOINT SIMILAR)

COVER PLATE NOTES

1. Cover plates are required at all bridge expansion joints for the full width of the sidewalk.
2. The cover plate must be capable of accommodating the anticipated expansion joint opening and operating ranges.

See Design Standards 21100 AND 21110.

AMERICANS WITH DISABILITIES ACT:

Bridge and bridge approach sidewalk surfaces shall conform to the Americans with Disabilities Act (ADA) and Florida Accessibility Code

Special attention is required when:

- Bridge or bridge approach grades are greater than 5%.
- Drainage grates or scuppers are placed within the limits of the sidewalk.
- Expansion Joints are placed within the limits of the sidewalk.
- Sidewalk cross slopes exceed 2%.

In cases where grades greater than 5%, ramps and landing shall be provided. See the ADA Requirements (3 of 5) and (4 and 5) for details. In some cases drainage within the sidewalk limits can be minimized or eliminated by addressing the roadway drainage separately and by carrying the sidewalk drainage to the end of bridge or to the touch-down point. Cover plates are required on all expansion joints with openings greater than 1/2". A strip-seal and modular joint example is shown on ADA Requirement (1 of 5) and (2 of 5), respectively. See ADA Requirement (5 of 5) for example showing how structures with sidewalks and cross slopes greater than 2% can be detailed.

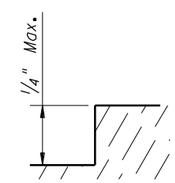

VERTICAL STEP

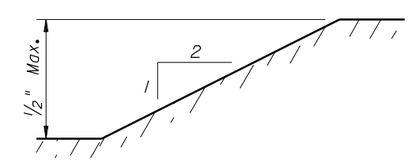

TAPERED STEP

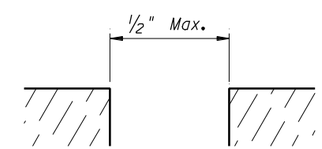

EXPANSION JOINT OR
GRATING OPENINGS

SIDEWALK SURFACES

Sidewalk surfaces shall be firm, stable and slip-resistant.

Expansion joint openings or openings in drainage grates or scuppers shall not exceed 1/2".

Vertical changes in surface shall be as follows:

- Abrupt Vertical Steps shall not exceed 1/4"
- Tapered Steps shall not exceed 1/2" with a 1:2 tapered slope.
- Vertical changes from level greater than 1/2" shall have slopes not greater than 1:12 slope with landings placed at every 2'-6" of vertical rise.

ADA SURFACE REQUIREMENTS

DETAIL NAME	SHEET NO.
ADA REQUIREMENTS (1 OF 5) - COVER PLATE AT EXPANSION JOINTS WITHIN LIMITS OF SIDEWALK	S-39

7/28/2006 9:18:18 AM $I_USTN_MACWARE$DBostonJoinCover.dgn

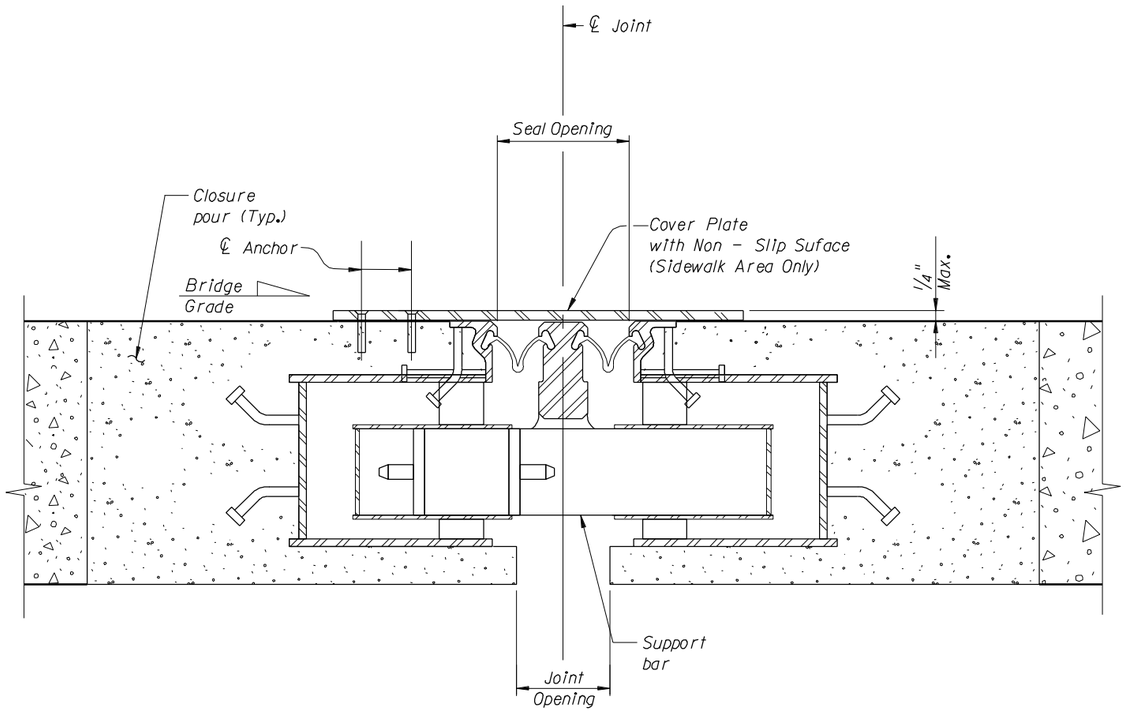

SECTION THRU EXPANSION JOINT
WITHIN LIMITS OF SIDEWALK

COVER PLATE NOTES

1. Cover plates are required at all bridge expansion joints for the full width of the sidewalk.
2. The cover plate must be capable of accommodating the anticipated expansion joint opening and operating ranges.

See Design Standards 21100 for Cover Plate requirements and details.

DETAIL NAME: ADA REQUIREMENTS (2 OF 5) - COVER PLATE AT EXPANSION JOINTS WITHIN LIMITS OF SIDEWALK

SHEET NO. S-40

7/28/2006 9:19:06 AM $(_USTN_MACHINE)ExpansionJointCover.dgn

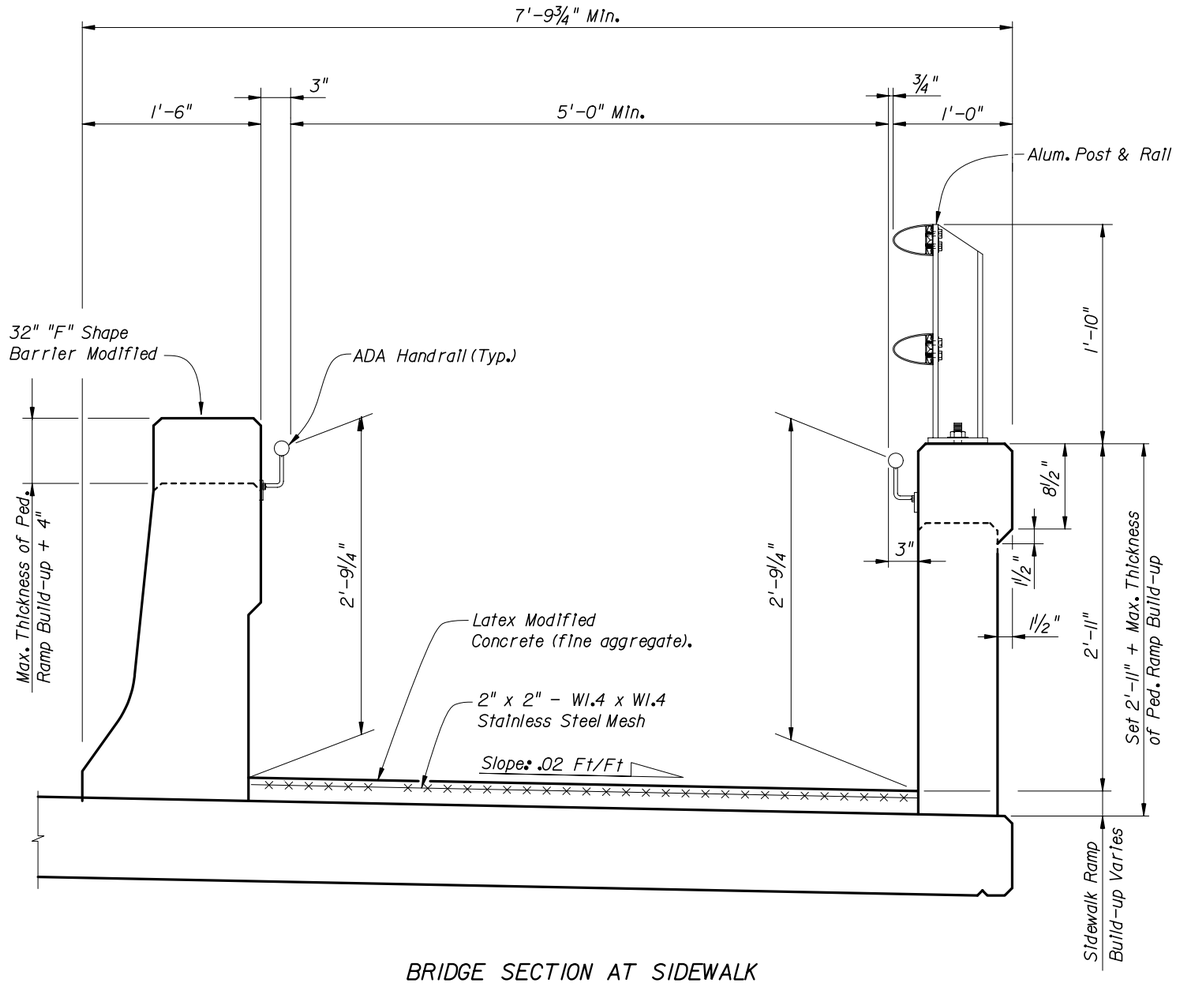

BRIDGE SECTION AT SIDEWALK
WITH 32" "F" SHAPE BARRIER (MODIFIED)

SIDEWALK RAMP BUILD-UP NOTES

1. Sand-blast or water-blast deck surface within limits of the sidewalk.
2. Remove all loose concrete and laitance in accordance with the manufacturer's recommendations.
3. Apply an approved epoxy bonding agent to the exposed concrete surface.
4. Overlay with latex modified concrete to the dimensions indicated for the special pedestrian ramp and landings.
5. Finish deck surface in accordance with Section 522.

RAMPS

ADA ramps, landings and ADA handrails shall be provided within the sidewalk limits where bridge and bridge approaches have grades greater than 5%.

ADA handrails are required on both sides of the sidewalk in areas where ramps are required. The ADA handrails shall be placed a constant distance from the landing/ramp surface. It is aesthetically desirable to maintain a constant height pedestrian/roadway barrier for the full bridge length. The height of the pedestrian/roadway barrier should be sufficient to hide the ADA handrail.

A minimum clear distance of 5'-0" between ADA handrails shall be provided.

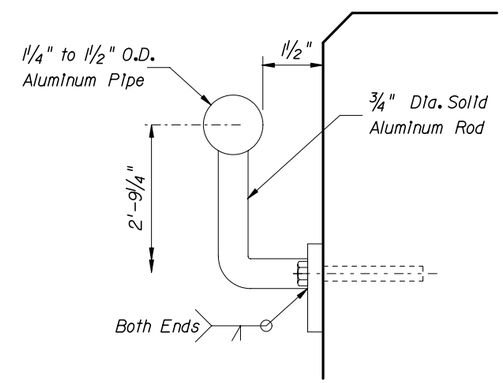

ADA HANDRAIL

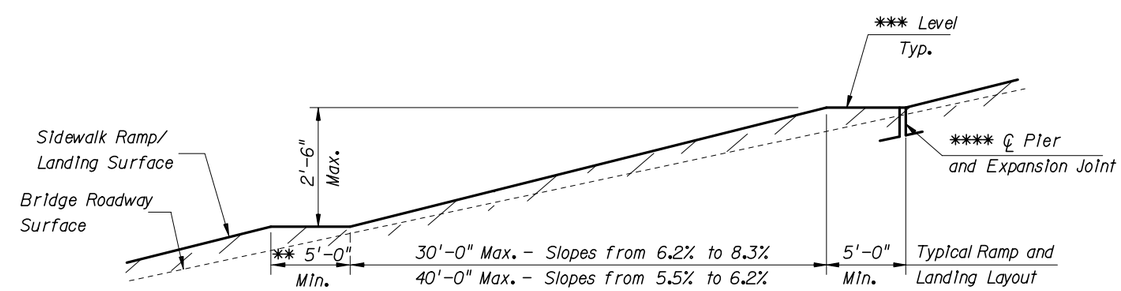

RAMPS - MAXIMUM SLOPES AND LANDING
SPACING AND DIMENSIONS

** 6'-0" Minimum at Bottom Landing
*** 2% or Less Slope.
**** Vary the ramp and landing dimensions as required so that expansion joint locations are at the points of minimum build-up to simplify detailing.

DETAIL NAME: ADA REQUIREMENTS (3 OF 5) - ADA RAMPS FOR BRIDGES GRADES GREATER THAN 5%

SHEET NO. S-41

1/27/2005 1:02:50 PM $(_USTN_MACHINE)Computer_support\StructuresSoftware\StructuresManual\2005 Jan\Graphics\PreferredDetailsDGNs\ADA_Handrail.dgn

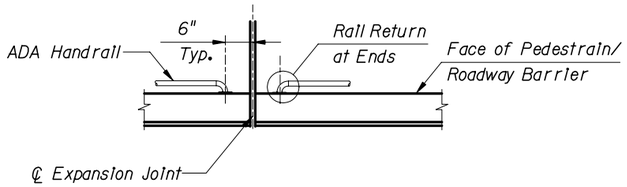

PLAN VIEW AT ENDS

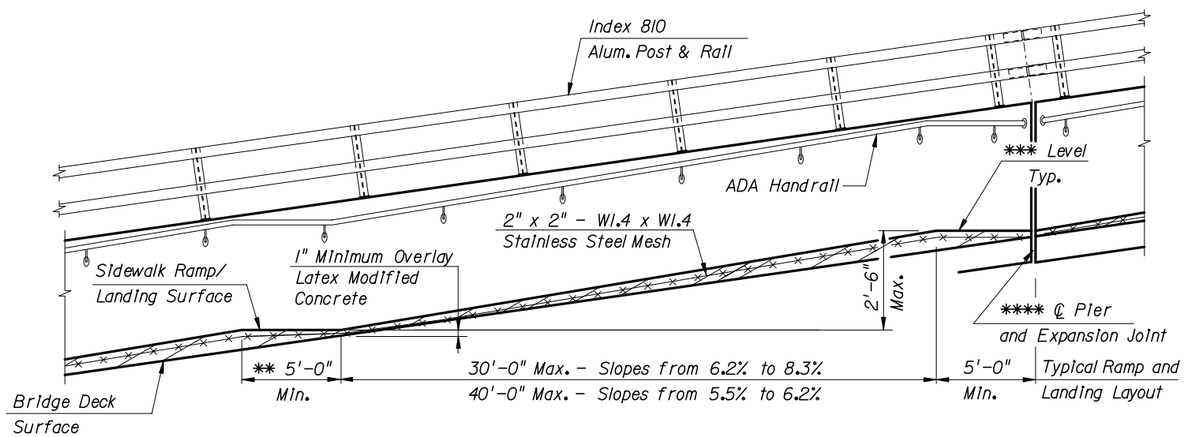

RAMPS - MAXIMUM SLOPES AND LANDING
SPACING AND DIMENSIONS

** 6'-0" Minimum at Bottom Landing
*** 2% or Less Slope.
**** Vary the ramp and landing dimensions as required so that expansion joint locations are at the points of minimum build-up to simplify detailing.

ALUMINUM ADA HANDRAIL NOTES

1. Payment for the ADA handrail shall be per pay item 515-1-2 which includes the furnishing and installation of the grab rails, rail splice assemblies, wall brackets, wall returns, anchor bolts, nuts, washers, screws, resilient pads and all incidental materials and labor required to complete the installation on the bridge and roadway barriers.

2. Structural requirements: ADA handrails, assemblies, wall brackets and attachments shall withstand a minimum uniform load of 250 pounds per foot applied vertically down and horizontally, but not simultaneously on the top of the rail. The contract all provide the manufacturer's engineering design of the rail system, its components, bracket spacing and mechanical fasteners. - See submittals (below).

3. Regulatory requirements: The rail system, its components and installation shall be in compliance with the current ADA Standards For Accessible Design and all applicable state and local authorities.

4. Submittals: The Contractor shall submit the following for the Engineer's approval prior to fabrication.
   a. Shop drawings with complete details including rail, bracket and expansion joint locations. Indicate component details, materials, finishes, connections and joining methods, and the relationship to adjoining work.
   b. Summary of the materials proposed for the rail system, including mill analysis with certification by the producer that the parts are of the alloys specified and meet the specifications called for. - Per Section 965-2 of the specifications.
   c. The manufacturer's engineering design and data for the rail system and components signed and sealed by a Professional Engineer registered in the state of Florida.
   d. The manufacturer's installation instructions and product data.

5. Materials and finishes:
   a. Rails and splice assemblies - extruded aluminum pipe. Alloy 6063-T52 meeting ASTM B 221. Rails shall be schedule 40 with a nominal size of 1-1/2 inches (1.900 inches outside diameter), and a 0.145 inch minimum wall thickness, with a clear anodiz finish.
   b. Wall brackets - extruded aluminum alloy 6063-T52 meeting ASTM B 221, with a clear anodized finish.
   c. Mechanical fasteners shall be of the type and size required per the manufacturer's specification and design calculations.
      1. Anchor bolts for the brackets shall be in accordance with ASTM A36 or ASTM F1554, Grade 36. Anchor bolts, nuts and washers shall not be hot dip galvanized in accordance with Section 962 of the Specifications.
      2. Fasteners and washers used at the rail splice assemblies and to mount the rails to the brackets shall be stainless steel, ASTM F-593, Alloy Group 2 (326).

6. Welding: Welding of aluminum components shall be in accordance with ANSI/AWS D1.2 "Structures Welding Code - Aluminum".

7. Installation:
   a. Install in accordance with the approved shop drawings and manufacturer's instructions.
   b. Erect rails parallel to and 2'-10" above the top of pedestrian ramp as indicated in these plans.
   c. Wall brackets shall be set normal to the pedestrian ramp profile longitudinally. Wall brackets shall be seated on 1/8" thick resilient pads in accordance with Section 932 of the Specifications. The dimensions of the resilient pads shall be the same as the wall bracket.
   d. Rails shall be continuous over a minimum of 3 wall brackets. Splices shall be spaced at 40'-0" centers maximum. Locate the center of a splice near the edge wall brackets.
   e. After installation is completed, wash all rail components thoroughly with clean water and soap; rinse with clean water. Do not use acid solution, steel wool or other harsh abrasives. If stain remains after washing, remove finish and restore in accordance with NAAMM metal finishes manual.

DETAIL NAME: ADA REQUIREMENTS (4 OF 5) - ADA RAMPS FOR BRIDGES GRADES GREATER THAN 5%

SHEET NO. S-42

1/27/2005 1:01:50 PM $(_USTN_MACHINE)Computer_support\StructuresSoftware\StructuresManual\2005 Jan\Graphics\PreferredDetailsDGNs\ADA_Handrail.dgn

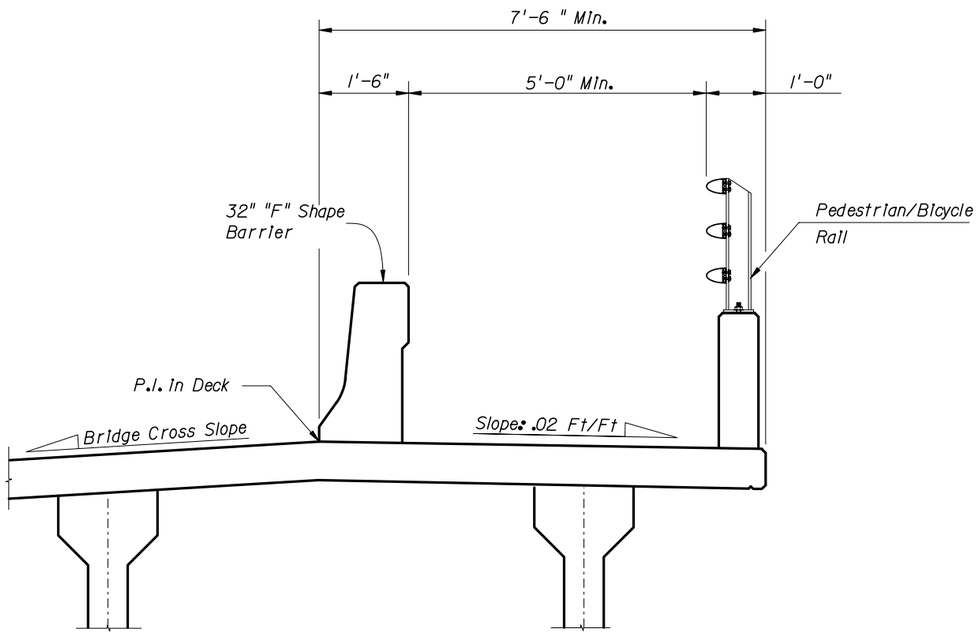

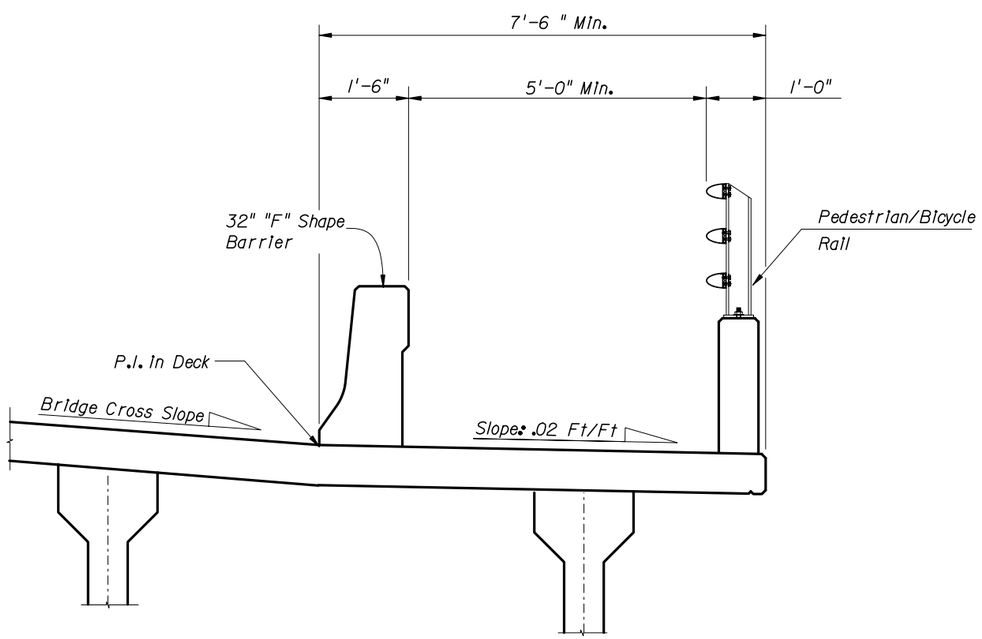

BRIDGE SECTION AT SIDEWALK WITH BRIDGE
CROSS SLOPE GREATER THAN 2%

ADA REQUIREMENTS FOR BRIDGES WITH
CROSS SLOPE GREATER THAN 2%

Sidewalk cross slopes on bridges shall not exceed 2%.

Maintaining the same cross slope throughout the width of the bridge is generally desirable to simplify deck screeding. Maintain a constant cross slope and provide a latex modified concrete overlay as required to meet the 2% cross slope criteria. Depending on bridge cross slopes and sidewalk widths, the overlay may be too thick. In these cases, it is recommended that a change in deck cross slope (P.I.) be provided at the gutter line.

The sidewalk may slope to the outside or inside as long as the slope is 0.02 or less and as long as the drainage can be handled appropriately.

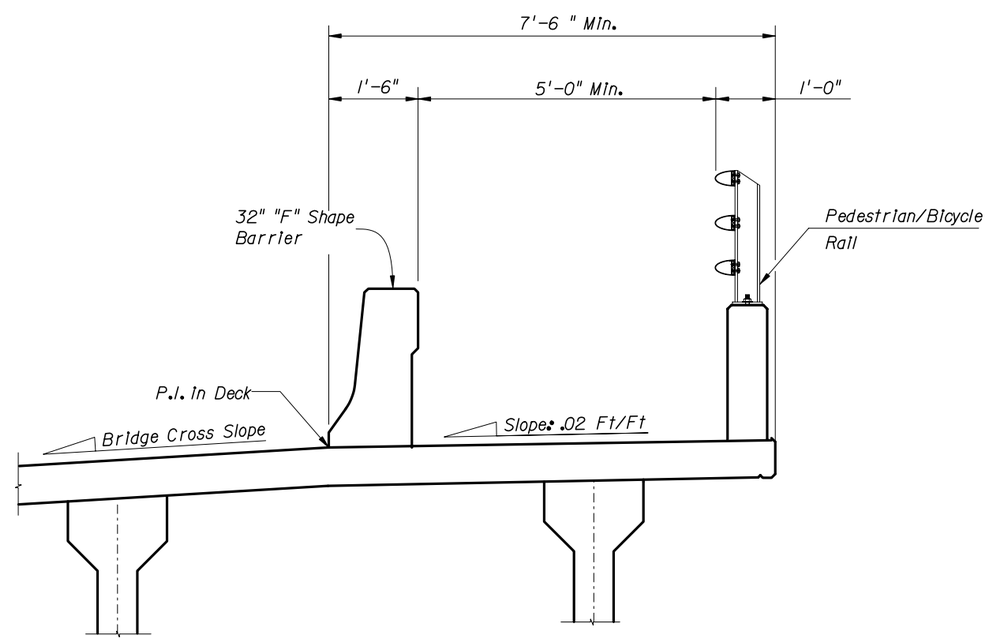

DETAIL NAME: ADA REQUIREMENTS (5 OF 5) - BRIDGES WITH CROSS SLOPES GREATER THAN 2%

SHEET NO. S-43

1/27/2005 1:03:56 PM $(USTN_MACHINE)Computer_support\StructuresSoftware\StructuresManual\2005 Jan\Graphics\PreferredDetailsDGNs\ADA_Handrail.dgn