GENERAL NOTES

GENERAL SPECIFICATIONS:
Florida Department of Transportation Standard Specifications for Road and Bridge Construction (dated _____), as amended by contract documents.

DESIGN SPECIFICATIONS:
American Association of State Highway and Transportation Officials (AASHTO) LRFD Bridge Design Specifications (XXXX edition) and approved interims as specified in the Structures Design Guidelines.
FDOT Structures Design Guidelines [January or July 20XX]

ENVIRONMENT:
Superstructure - [Slightly/Moderately/Extremely] Aggressive
Substructure - Concrete: [Slightly/Moderately/Extremely] Aggressive
Steel: [Slightly/Moderately/Extremely] Aggressive

FUTURE WEARING SURFACE:
Design includes allowance for 15 psf.

CONCRETE: [Depends on Environmental Classification]
All concrete shall be in accordance with Section 346.

Concrete Class	Min. 28-day Compressive Strength (ksi)	Location of Concrete in Structure
XX	f'c = XX	CIP Traffic Railing Barrier
XX	f'c = XX	CIP Superstructure
II	f'c = 4.5	CIP Approach Slabs

CONCRETE COVER: [Depends on Environmental Classification]
CIP superstructure = X in. (Typical except as noted)
CIP substructure = X in. for external surfaces cast against earth
= X in. for other external surfaces

Concrete covers shown in the plans do not include placement and fabrication tolerances unless shown as "minimum cover". See FDOT Standard Specifications for allowable tolerances.

REINFORCING STEEL:
All reinforcing steel shall be ASTM A615, Grade 60.

APPLIED FINISH COATING:
A Class 5 Finish Coating shall be applied to the portions of the structures shown on the Surface Finish Detail.

PLAN DIMENSIONS:
All dimensions in these plans are measured in feet either horizontally or vertically unless otherwise noted.

UTILITIES:
For locations of existing utilities, see Plan and Elevation Sheets X-X, X-X, and X-X.

SCREEDING DECK SLABS:
Screed the riding surface of the Bridge Deck and Approach Slabs to achieve the Finish Grade Elevations shown in the Plans. Account for theoretical deflections due to deck self weight, deck casting sequence, deck forming systems, construction loads, overlays and temporary shoring, etc. as required.

STAY IN PLACE DECK FORMS:
Stay in place deck forms will not be permitted on this project.
or
Design includes allowance for 20 psf. over the projected plan area of the metal forms for the unit weight of metal forms and concrete required to fill the form flutes. Stay-in-place metal forms to be detailed to clear top lateral bracing of box girder.

JOINTS IN CONCRETE:
Construction joints will be permitted only at locations indicated on the plans. Additional construction joints or alterations to those shown shall require approval of the Engineer.

DIMENSION VERIFICATION:
The dimensions, elevations and intersection angles shown are based on information as detailed in the Original Construction Plans of the existing bridges (unless noted otherwise), and may not represent the as-built conditions. It is the Contractor's responsibility to verify this data before beginning construction.

MAINTENANCE OF TRAFFIC:
[Insert specific MOT notes for the project].

CONSTRUCTION OVER TRAFFIC:
The following construction activities shall not be allowed over traffic:
a. Girder placement.
b. Deck form placement and removal.
c. Concrete deck placement.

PHASING OF WORK:
Work phasing and progression of the work shall conform with the MOT Plans located in the Roadway Plans and the notes on the construction sequence drawings.

EXISTING REINFORCING STEEL:
All superstructure deck transverse reinforcing steel, both top and bottom layers, and end bent reinforcing steel shall be protected, salvaged and utilized in the new structure. Cutting of this reinforcing steel and substitution of epoxy bonded dowels is not permitted as a construction option.

LEAD BASED PAINT:
[Use note for all locations where lead based paint has been found]
The Contractor is responsible for following the requirements of the Occupational Safety and Health (OSHA), the Environmental Protection Agency (EPA) and other governing Authorities when removing paint. See the Specifications for additional information.

UTILITIES:
The utilities, including under deck lighting, shown in the bridge plans are at approximate locations. For additional information refer to the utilities plans.

BID ITEM NOTES

1. For Maintenance of Traffic Notes, see Roadway Plans.
2. For limits of Removal of Existing Structures, Item Number 110-3, see Sheet No. xx-xx.
3. The Approach Slab sheets are included with the Bridge Plans. All quantities, that are associated with the individual Approach Slabs are included with the quantities for their respective bridges, except for the asphalt overlay quantities. They are included with the Roadway quantities.
4. See additional pay item notes on sheets [Insert Sheet Numbers].

BRIDGE NO. XXXXXX

REVISIONS					
DATE	BY	DESCRIPTION	DATE	BY	DESCRIPTION

	NAMES	DATES
DRAWN BY	ABC	MO-YR
CHECKED BY	DEF	MO-YR
DESIGNED BY	GHI	MO-YR
CHECKED BY	JKL	MO-YR
APPROVED BY	MNO	

ENGINEER OF RECORD:
EOR Name, P.E.
Registration/P.E. No. 000000
Engineering Co. Name/Logo
Address
Certificate of Authorization No.

FLORIDA DEPARTMENT OF TRANSPORTATION

ROAD NO.	COUNTY	FINANCIAL PROJECT ID
XXX	XXXX	123456-1-12-12

SHEET TITLE: GENERAL NOTES

PROJECT NAME: DETAILING MANUAL EXAMPLES

SHEET NO. EX-1

NOTICE: THE OFFICIAL RECORD OF THIS SHEET IS THE ELECTRONIC FILE SIGNED AND SEALED UNDER RULE 61G15-23.003, F.A.C.

STRUCTURAL STEEL:

All structural steel shall be in accordance with ASTM A709, Grade 50, except that stiffeners, internal and external cross frames and lateral bracing shall be Grade 36 unless otherwise shown.

CHARPY V-NOTCH:

All ASTM A709 structural steel as, designated on the plans, shall receive Charpy V-Notch testing in accordance with ASTM A709 and supplemental requirement S83 or S84 as noted below.

a. Redundant members, as designated on the plans, shall be tested in accordance with Table S1.2 (Zone 1) of ASTM A709 (S83).

b. Non-redundant members, as designated on the plans, shall be tested in accordance with table S1.3 (Zone 1) of ASTM A709 (S84).

All other structural steel shall meet the Charpy V-Notch test requirements specified in Specifications Section 962.

STEEL FABRICATION:

Structural steel for girders and girder framing, including box girders, diaphragms, cross bracing, etc., shall be ASTM A709. Fabrication shall be performed in accordance with the current applicable edition of the AASHTO/AWS D1.5 Bridge Welding Code. Fabricators of structural steel girders and girder framing shall have the AISC Quality Certification for Major Steel Bridges and AISC Fracture Critical Members endorsement.

WELDING:

1. Welding details and operations shall be in accordance with the current edition of the AASHTO/AWS D1.5 Bridge Welding Code. Welding procedures shall be submitted and approved prior to welding on the project. Welds requiring non-destructive testing shall be radiographically inspected, except where the geometry of the region of the weld will not permit satisfactory information to be secured for verification of the weld quality. When such geometrical conditions exist, other inspection procedures or combinations of procedures such as Ultrasonic Inspection, Dye Penetrant Inspection and/or Magnetic Particle Inspection, shall be used. Non-destructive Testing shall be performed as required by the current edition of the AASHTO/AWS D1.5 Bridge Welding Code.
2. Field welding to any Structural Steel for the purpose of attaching erection hardware, or for anchoring conduits for box lighting shall not be permitted. Proposed method of anchoring conduits/boxes for box lighting shall be formally submitted to the Engineer for approval. Shear Connector Installation is governed by OSHA Steel Erection Rule.
3. The following members are classified as ancillary members in accordance with the current edition of the AWS D1.5 Bridge Welding Code:
   a. Expansion Joint Welds
   b. Drainage System Welds

FRACTURE CRITICAL MEMBERS:

See framing plans for designation of Fracture Critical Members. Structural components designated on the plans or in the special provisions as "Fracture Critical" shall conform to the provisions of Chapter 12 of the current AASHTO/AWS D1.5 Bridge Welding Code.

FIELD CONNECTIONS:

All field connections shall be made with 7/8" diameter high strength slip critical type bolts in accordance with ASTM A325 unless otherwise shown.

PAINTING:

All structural steel shall be painted with a self-curing inorganic zinc coating system in accordance with Section 561 of the Specifications. A three (3) coat system is required regardless of environmental classifications on the exterior of the box girders and the exterior diaphragms. The finish coat shall conform to Federal Standard No. xxx Color Number xxxx. One (1) shop coat (first coat of a three (3) coat inorganic paint system) is required in the interior of the box girders. Interior of box is to be painted light grey or white.

LADDERS AND PLATFORMS:

Structural steel for ladders and platforms shall conform with ASTM A36 and shall be hot-dip galvanized in accordance with ASTM A123. Welding shall conform to AWS D1.1

BRIDGE NO. XXXXXX

REVISIONS

DATE	BY	DESCRIPTION	DATE	BY	DESCRIPTION

	NAMES	DATES
DRAWN BY	ABC	MO-YR
CHECKED BY	DEF	MO-YR
DESIGNED BY	GHI	MO-YR
CHECKED BY	JKL	MO-YR
APPROVED BY	MNO	

ENGINEER OF RECORD:
EOR Name, P.E.
Registration/P.E. No. 000000
Engineering Co. Name/Logo
Address
Certificate of Authorization No.

FLORIDA DEPARTMENT OF TRANSPORTATION

ROAD NO.	COUNTY	FINANCIAL PROJECT ID
XXX	XXXX	123456-1-12-12

SHEET TITLE: GENERAL NOTES

PROJECT NAME: DETAILING MANUAL EXAMPLES

SHEET NO. EX-2

NOTICE: THE OFFICIAL RECORD OF THIS SHEET IS THE ELECTRONIC FILE SIGNED AND SEALED UNDER RULE 61G15-23.003, F.A.C.

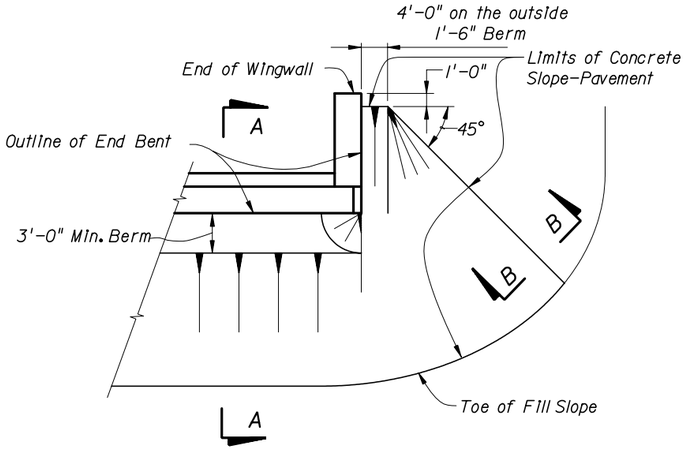

PARTIAL PLAN

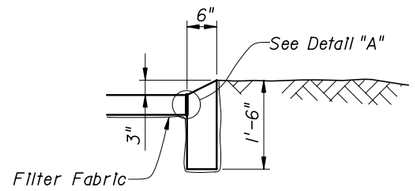

SECTION B-B

Note: The filter Fabric shall be Type D-6 in accordance with Design Standards Index No. 199. Cost of Holes, Wire Mesh, Aggregate, Filter Fabric and Sand shall be included in the Cost for Slope Pavement.

NOTE: Vertical joints shall be sealed.

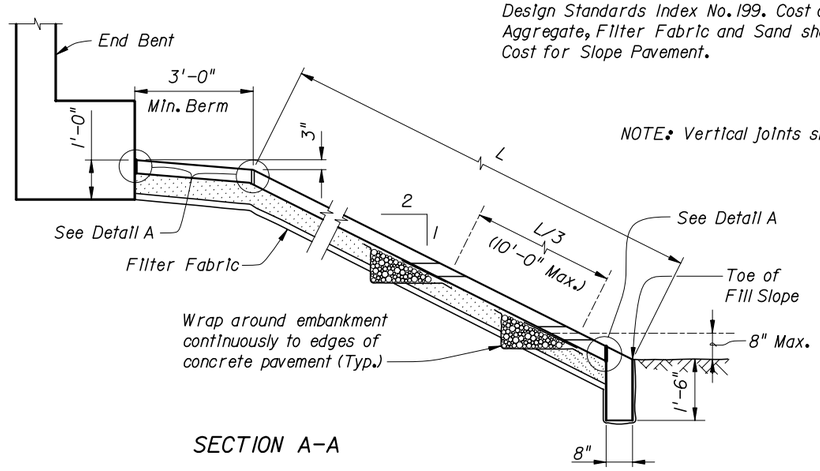

SECTION A-A

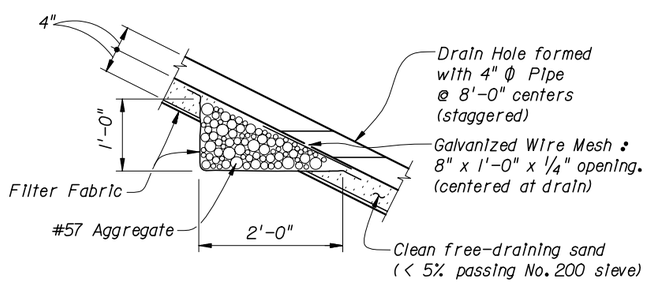

DRAIN DETAIL

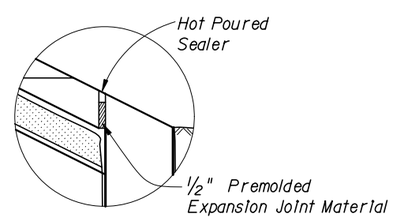

DETAIL A

CONCRETE SLOPE PAVEMENT PROTECTION ADJACENT TO ROAD

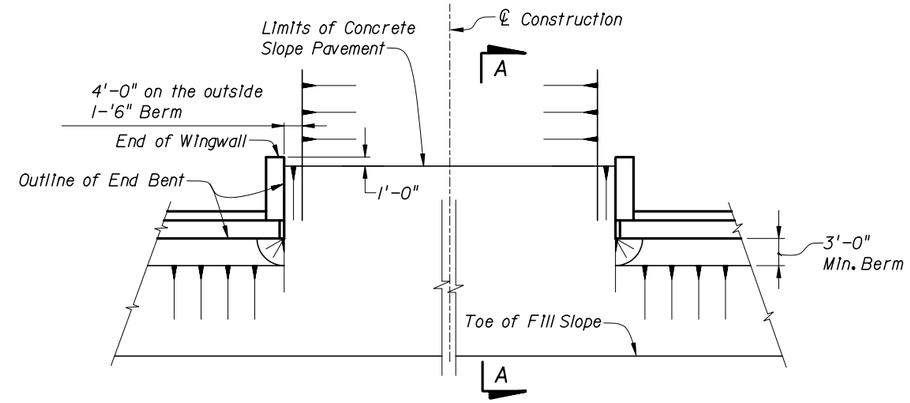

PARTIAL PLAN

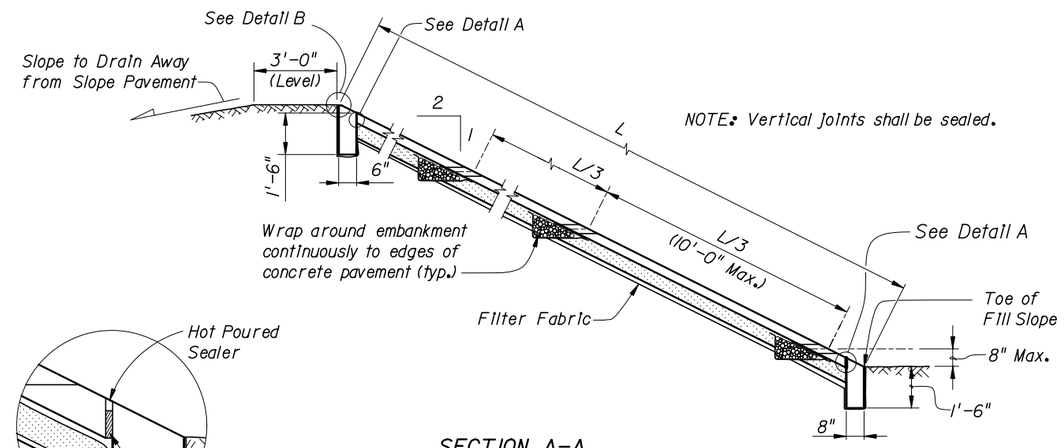

NOTE: Vertical joints shall be sealed.

SECTION A-A

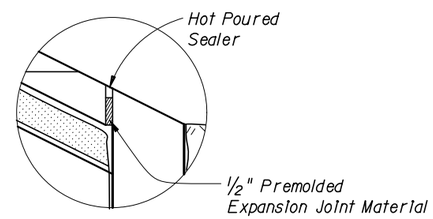

DETAIL A

Note: The Filter Fabric shall be Type D-6 in accordance with Design Standards Index No. 199. Cost of Holes, Wire Mesh, Aggregate, Filter Fabric and Sand shall be included in the Cost for Slope Pavement.

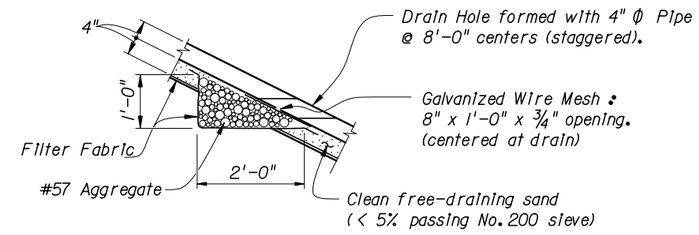

DRAIN DETAIL

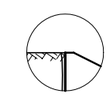

DETAIL B

CONCRETE SLOPE PAVEMENT PROTECTION BETWEEN DUAL GRADE SEPARATION BRIDGES

BRIDGE NO. XXXXXX

REVISIONS					
DATE	BY	DESCRIPTION	DATE	BY	DESCRIPTION

	NAMES	DATES
DRAWN BY	ABC	MO-YR
CHECKED BY	DEF	MO-YR
DESIGNED BY	GHI	MO-YR
CHECKED BY	JKL	MO-YR
APPROVED BY	MNO	

ENGINEER OF RECORD.
EOR Name, P.E.
Registration/P.E. No. 000000
Engineering Co. Name/Logo
Address
Certificate of Authorization No.

FLORIDA DEPARTMENT OF TRANSPORTATION

ROAD NO.	COUNTY	FINANCIAL PROJECT ID
XXX	XXXX	123456-1-12-12

SHEET TITLE. SLOPE PROTECTION DETAIL OPTIONS

PROJECT NAME. DETAILING MANUAL EXAMPLES

SHEET NO. EX-3

NOTICE: THE OFFICIAL RECORD OF THIS SHEET IS THE ELECTRONIC FILE SIGNED AND SEALED UNDER RULE 61G15-23.003, F.A.C.

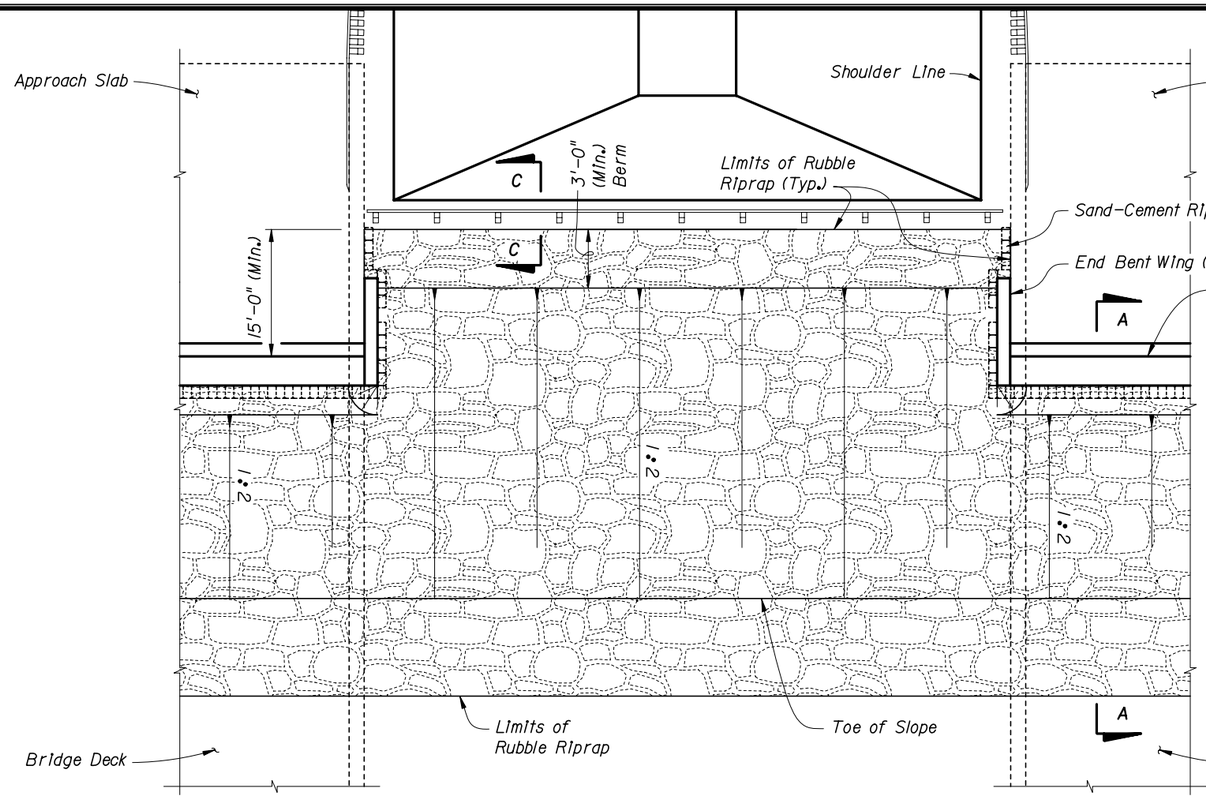

PARTIAL PLAN VIEW INSIDE AREA (MEDIAN) DUAL BRIDGES
(Bridge Deck and Approach Slab shown Dashed)

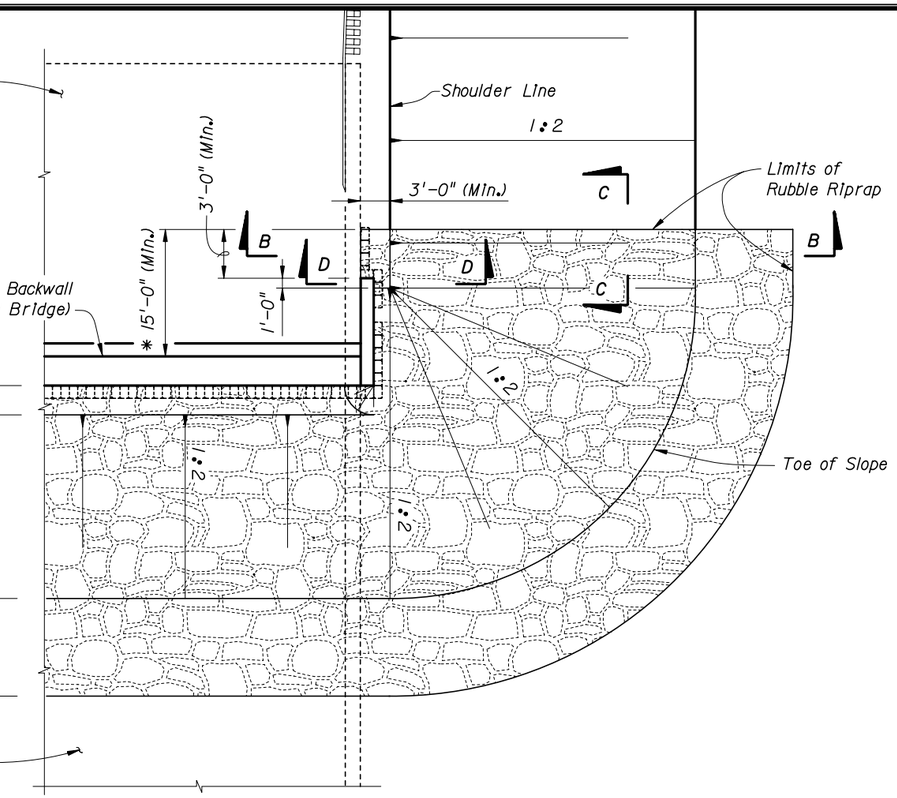

PARTIAL PLAN VIEW OUTSIDE AREA SINGLE OR DUAL BRIDGES
(Bridge Deck and Approach Slab shown Dashed)

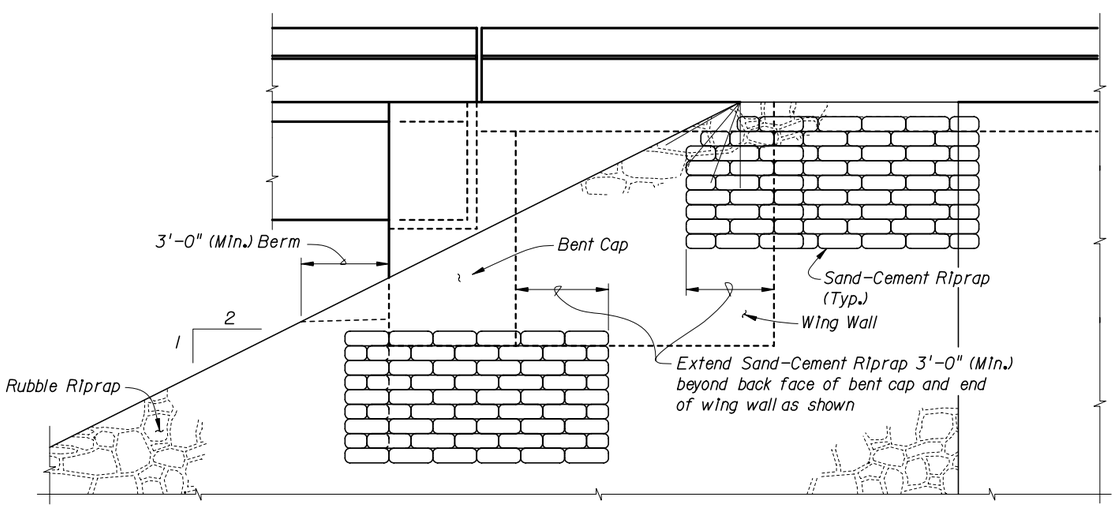

PARTIAL SIDE ELEVATION

NOTE:
For Section A-A, B-B, C-C & D-D see Sheet EX-4b.

NOTES TO DESIGNER:

* Longitudinal extent of riprap shall be extended beyond 15' from front Face of Backwall if required by the Engineer.

For regions subject to waves over 3', a Coastal Engineer shall design the Slope Protection System.

BRIDGE NO. XXXXXX

REVISIONS					
DATE	BY	DESCRIPTION	DATE	BY	DESCRIPTION

	NAMES	DATES
DRAWN BY	ABC	MO-YR
CHECKED BY	DEF	MO-YR
DESIGNED BY	GHI	MO-YR
CHECKED BY	JKL	MO-YR
APPROVED BY	MNO	

ENGINEER OF RECORD:
EOR Name, P.E.
Registration/P.E. No. 000000
Engineering Co. Name/Logo
Address
Certificate of Authorization No.

FLORIDA DEPARTMENT OF TRANSPORTATION

ROAD NO.	COUNTY	FINANCIAL PROJECT ID
.	XXXX	123456-1-12-12

SHEET TITLE: SLOPE PROTECTION ADJACENT TO STREAMS

PROJECT NAME: DETAILING MANUAL EXAMPLES

SHEET NO. EX-4a

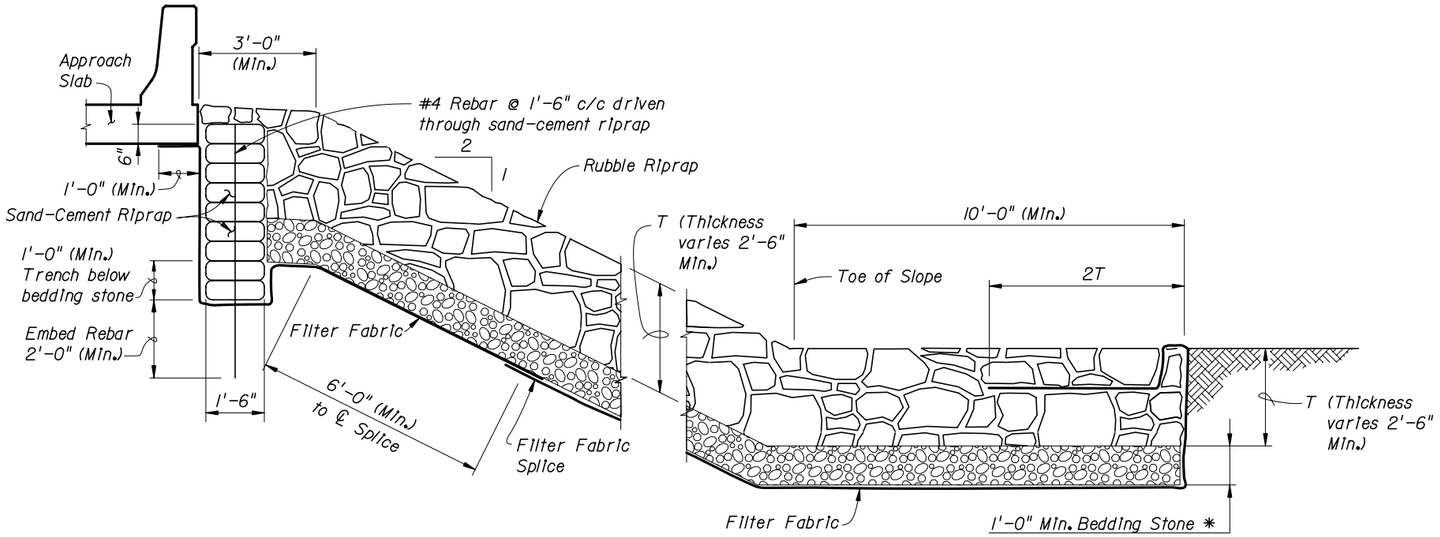

SECTION B-B

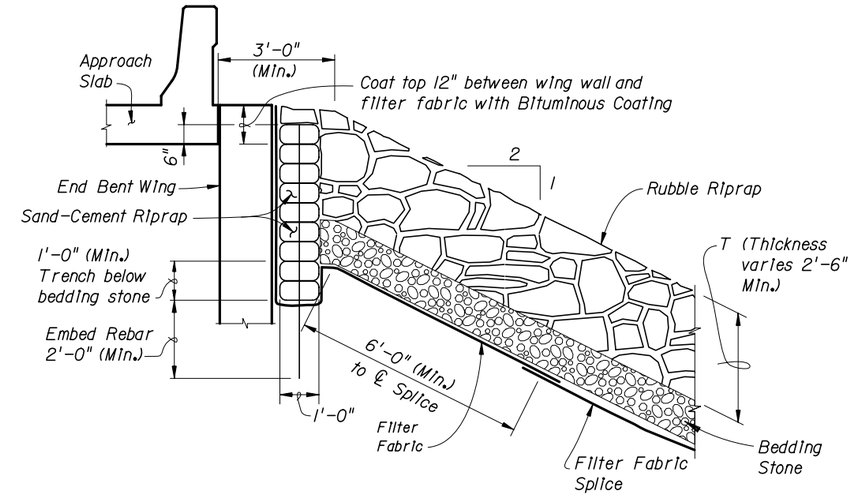

SECTION D-D

NOTE:
Filter Fabric shall be Type D-2, see Design Standard Index 199. Splice length shall be 6" if bedding stone specified or 2'-0" if no bedding stone specified.

For location of Section A-A, B-B, C-C & D-D see Sheet EX-4a.

* Provide Bedding Stone unless otherwise shown on the Bridge Hydraulic Recommendations sheet.

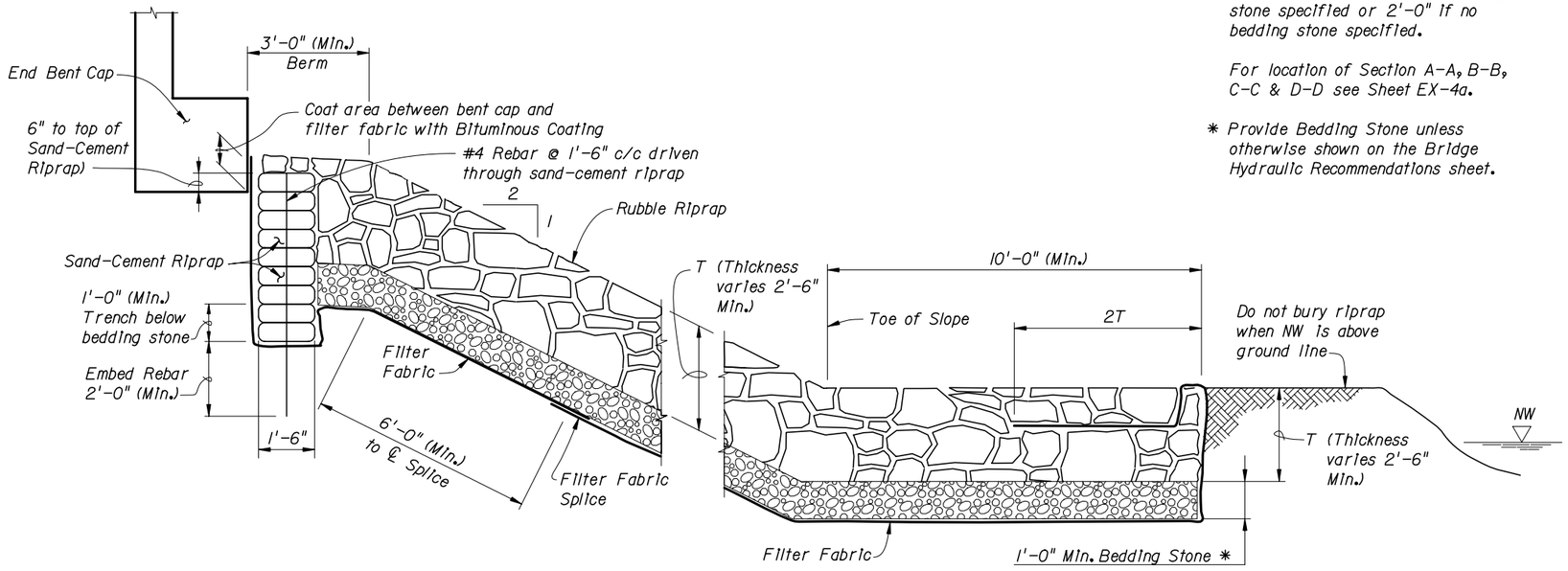

SECTION A-A

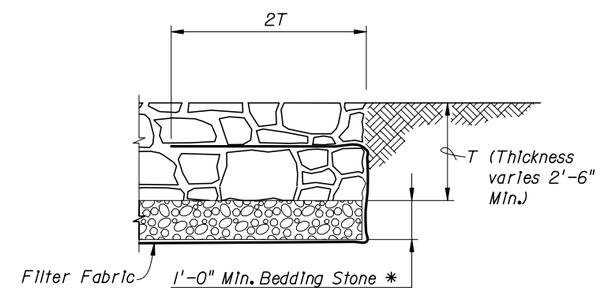

SECTION C-C

BRIDGE NO. XXXXXX

REVISIONS					
DATE	BY	DESCRIPTION	DATE	BY	DESCRIPTION

	NAMES	DATES
DRAWN BY	ABC	MO-YR
CHECKED BY	DEF	MO-YR
DESIGNED BY	GHI	MO-YR
CHECKED BY	JKL	MO-YR
APPROVED BY	MNO	

ENGINEER OF RECORD.
EOR Name, P.E.
Registration/P.E. No. 000000
Engineering Co. Name/Logo
Address
Certificate of Authorization No.

FLORIDA DEPARTMENT OF TRANSPORTATION

ROAD NO.	COUNTY	FINANCIAL PROJECT ID
.	XXXX	123456-1-12-12

SHEET TITLE.
SLOPE PROTECTION ADJACENT TO STREAMS

PROJECT NAME.
DETAILING MANUAL EXAMPLES

SHEET NO.
EX-4b

CONCRETE FINISHES

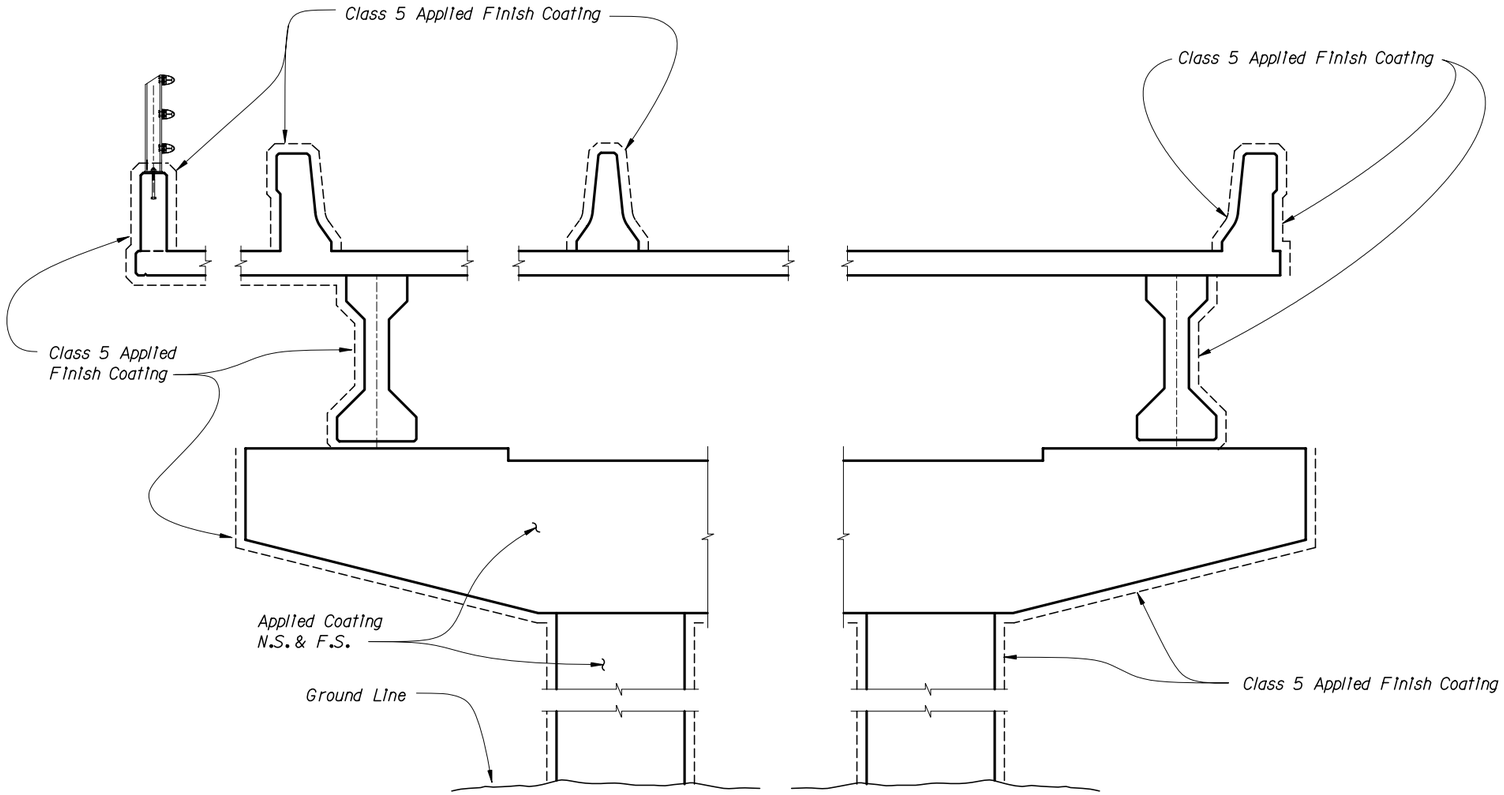

GRADE SEPARATION STRUCTURES

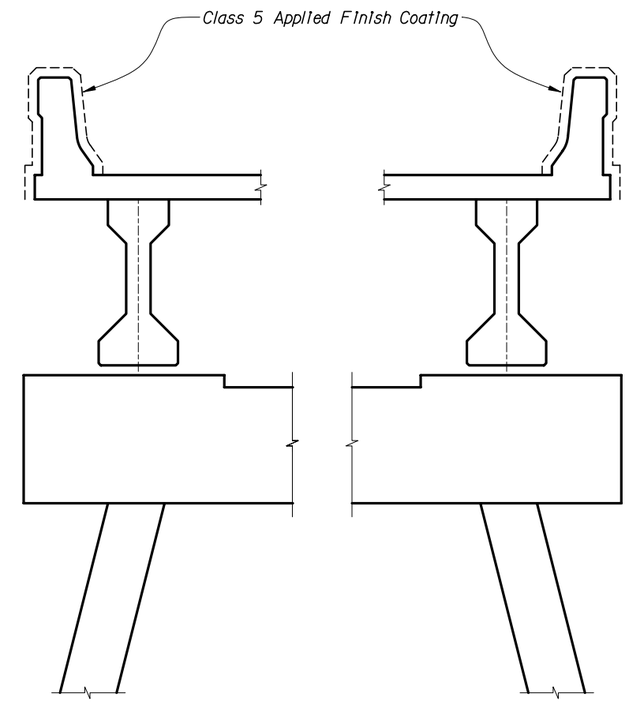

WATERWAY CROSSINGS AND R.R. SEPARATION STRUCTURES

GRADE SEPARATION STRUCTURES:
Apply a Class 5 Finish Coating to all exposed surfaces seen in Elevation, see detail above, as well as exposed surfaces of end bent wingwalls and all exposed surfaces of piers above ground line except tops of caps.

WATERWAY CROSSINGS AND RAILROAD SEPARATION STRUCTURES:
Apply a Class 5 Finish Coating to all exposed surfaces (top, inside and outside) of end bent wing walls, traffic barriers, median barrier and deck slab coping (see detail above).

C.I.P. RETAINING WALLS:
Apply a Class 5 Finish coating to all exposed surfaces of C.I.P. retaining walls (when called for on the plans).

The intent of the notes at left is to coat surfaces seen by the motoring public. Judgement shall be used in determining surfaces to be coated on Waterway and Railroad Structures in urban areas.

NOT FOR CONSTRUCTION
PRELIMINARY AND SUBJECT TO CHANGE

BRIDGE NO. XXXXXX

REVISIONS					
DATE	BY	DESCRIPTION	DATE	BY	DESCRIPTION

	NAMES	DATES
DRAWN BY	ABC	MO-YR
CHECKED BY	DEF	MO-YR
DESIGNED BY	GHI	MO-YR
CHECKED BY	JKL	MO-YR
APPROVED BY	MNO	

ENGINEER OF RECORD:
EOR Name, P.E.
Registration/P.E. No. 000000
Engineering Co. Name/Logo
Address
Certificate of Authorization No.

FLORIDA DEPARTMENT OF TRANSPORTATION

ROAD NO.	COUNTY	FINANCIAL PROJECT ID
XXX	XXXX	123456-1-12-12

SHEET TITLE: CLASS 5 APPLIED FINISH COATING

PROJECT NAME: DETAILING MANUAL EXAMPLES

SHEET NO. EX-5

NOTICE: THE OFFICIAL RECORD OF THIS SHEET IS THE ELECTRONIC FILE SIGNED AND SEALED UNDER RULE 61G15-23.003, F.A.C.

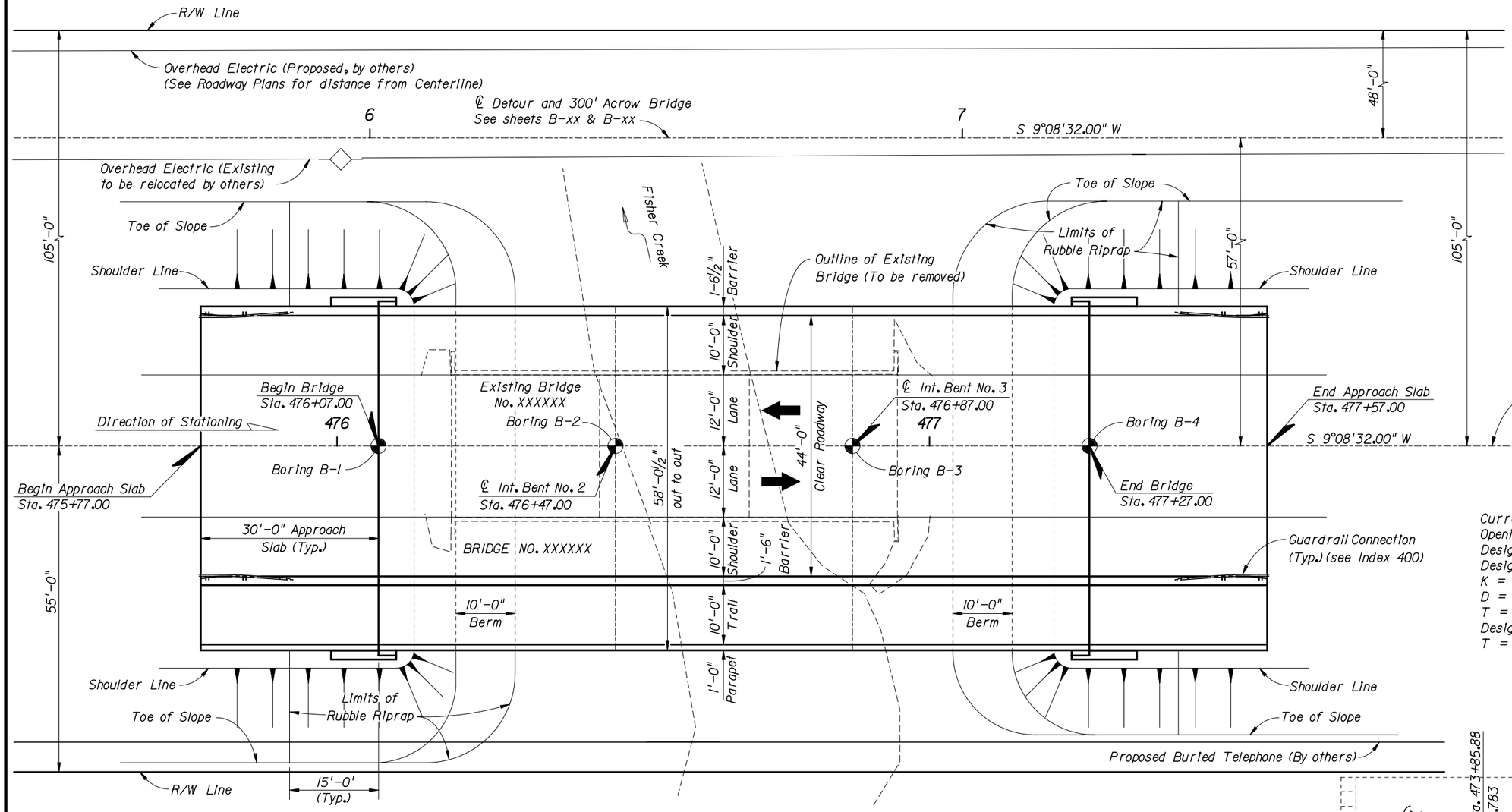

PLAN

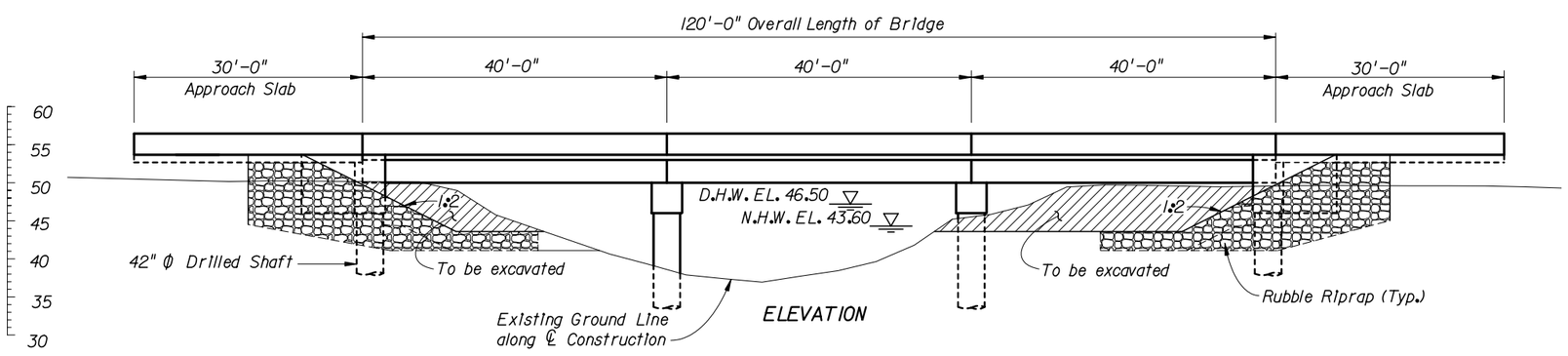

ELEVATION

TRAFFIC DATA
Current Year Estimate - 2000 AADT = 3808
Opening Year Estimate - 2003 AADT = 4409
Design Year Estimate - 2023 AADT = 11697
Design Speed = 60 MPH
K = 12%
D = 60%
T = 1.1%
Design Hour
T = 1.1%

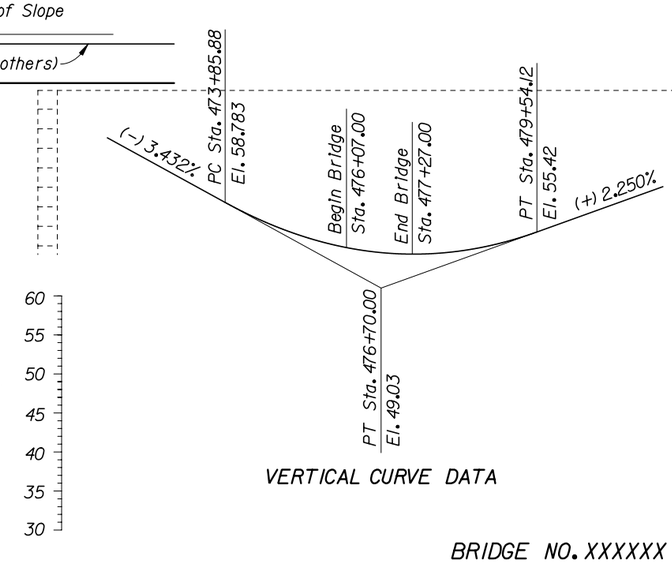

VERTICAL CURVE DATA

BRIDGE NO. XXXXXX

NOTICE: THE OFFICIAL RECORD OF THIS SHEET IS THE ELECTRONIC FILE SIGNED AND SEALED UNDER RULE 61G15-23.003, F.A.C.

REVISIONS

DATE	BY	DESCRIPTION	DATE	BY	DESCRIPTION

	NAMES	DATES
DRAWN BY	ABC	MO-YR
CHECKED BY	DEF	MO-YR
DESIGNED BY	GHI	MO-YR
CHECKED BY	JKL	MO-YR
APPROVED BY	MNO	

ENGINEER OF RECORD:
EOR Name, P.E.
Registration/P.E. No. 000000
Engineering Co. Name/Logo
Address
Certificate of Authorization No.

FLORIDA DEPARTMENT OF TRANSPORTATION

ROAD NO.	COUNTY	FINANCIAL PROJECT ID
XXX	XXXX	123456-1-12-12

SHEET TITLE: PLAN AND ELEVATION

PROJECT NAME: DETAILING MANUAL EXAMPLES

SHEET NO. EX-6

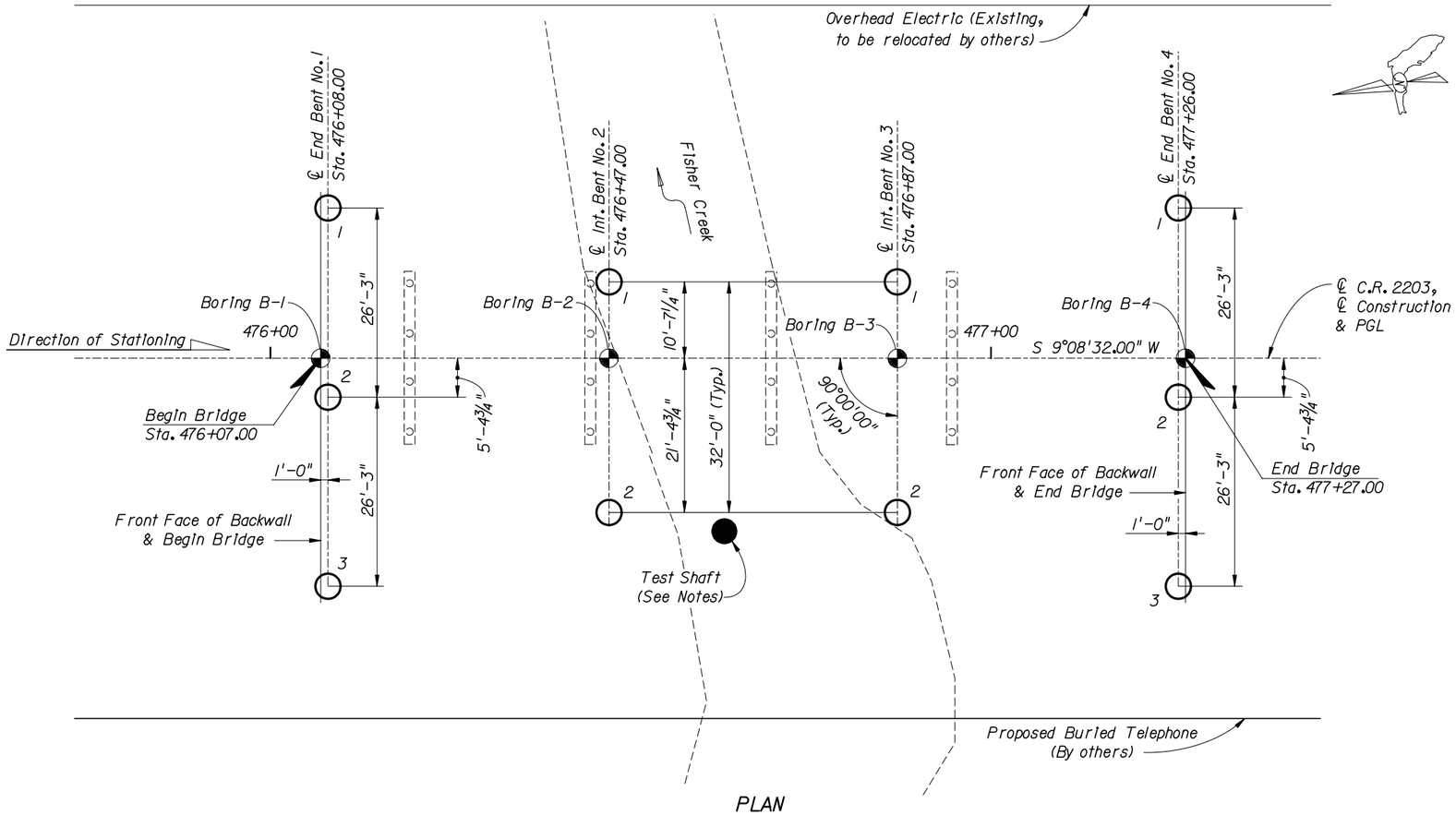

PLAN

NOTES:

1. Construct an out of position, reinforced test shaft 24'-0" right of ℄ Construction at Sta. 476+63 or as directed by the Engineer.
2. Construct the test shaft in the same manner and to the same requirements as a production shaft.
3. FDOT will inspect the shaft bottoms with it's Shaft Inspection Device (SID).
4. It is anticipated a mineral slurry will be required to maintain stability of the drilled shaft excavation. Slurry tanks and slurry desanding equipment are required for this project.

LEGEND

- ● Denotes 42" ϕ Test Shaft
- ○ Denotes 42" ϕ Drilled Shaft and number
- ○ Denotes 12" ϕ Existing Timber Piles (to be removed)
- ◐ Denotes Soil Borings

DRILLED SHAFT DATA TABLE									
INSTALLATION CRITERIA					DESIGN CRITERIA				
Pier or Bent No.	Shaft Size (In.)	Tip Elev. (ft.)	* Min. Tip Elev. (ft.)	Min. Rock Socket Length (ft.)	Factored Design Load (tons)	Down Drag (tons)	Long term Scour Elev. (ft.)	100-Year Scour Elev. (ft.)	ϕ
1	42	7.00	10.00	12.00	212.00	N/A	27.9	27.9	.55
2	42	0.00	16.00	10.00	318.00	N/A	27.9	27.9	.55
3	42	-13.00	0.00	16.00	318.00	N/A	27.9	27.9	.55
4	42	-5.00	0.00	7.00	212.00	N/A	27.9	27.9	.55

Tip Elevation: The elevation to which the shaft shall be constructed unless test load data, rock cores, or other geotechnical data obtained during construction allows the Engineer to authorize a different tip elevation.

* Min. Tip Elevation: The highest elevation that the shaft tip may be constructed if adjustments are made to the tip elevation

BRIDGE NO. XXXXXX

REVISIONS					
DATE	BY	DESCRIPTION	DATE	BY	DESCRIPTION

	NAMES	DATES
DRAWN BY	ABC	MO-YR
CHECKED BY	DEF	MO-YR
DESIGNED BY	GHI	MO-YR
CHECKED BY	JKL	MO-YR
APPROVED BY	MNO	

ENGINEER OF RECORD:
EOR Name, P.E.
Registration/P.E. No. 000000
Engineering Co. Name/Logo
Address
Certificate of Authorization No.

FLORIDA DEPARTMENT OF TRANSPORTATION

ROAD NO.	COUNTY	FINANCIAL PROJECT ID
XXX	XXXX	123456-1-12-12

SHEET TITLE: FOUNDATION LAYOUT

PROJECT NAME: DETAILING MANUAL EXAMPLES

SHEET NO. EX-7a

NOTICE: THE OFFICIAL RECORD OF THIS SHEET IS THE ELECTRONIC FILE SIGNED AND SEALED UNDER RULE 61G15-23.003, F.A.C.

PILE DATA TABLE

	INSTALLATION CRITERIA								DESIGN CRITERIA							PILE CUT-OFF ELEVATIONS								
	PIER or BENT NUMBER	PILE SIZE (In)	NOMINAL BEARING CAPACITY (tons)	TENSION CAPACITY (tons)	MINIMUM TIP ELEVATION (ft)	TEST PILE LENGTH (ft)	REQUIRED JET ELEVATION (ft)	REQUIRED PREFORM ELEVATION (ft)	FACTORED DESIGN LOAD (tons)	DOWN DRAG (tons)	TOTAL SCOUR RESISTANCE (tons)	NET SCOUR RESISTANCE (tons)	100-YEAR SCOUR ELEVATION (ft)	LONG TERM SCOUR ELEVATION (ft)	RESISTANCE FACTOR-Ø	PILE 1	PILE 2	PILE 3	PILE 4	PILE 5	PILE 6	PILE 7	PILE 8	PILE 9
PHASE 1																								
PHASE 2																								

$$\frac{\text{Factored Design Load} + \text{Net Scour} + \text{Down Drag}}{\phi} \leq \text{Nominal Bearing Resistance}$$

TENSION CAPACITY - the ultimate side friction capacity that must be obtained below the 100 year scour elevation to resist pullout of the pile (Specify only when design requires tension capacity).

TOTAL SCOUR RESISTANCE - an estimate of the ultimate static side friction resistance provided by the scourable soil.

NET SCOUR RESISTANCE - an estimate of the ultimate static side friction resistance provided by the soil from the required preformed or jetting elevation to the scour elevation.

100-YEAR SCOUR - estimated elevation of scour due to the 100 year storm event.

LONG TERM SCOUR - Estimated elevation of scour used in design for extreme event loading.

PILE INSTALLATION NOTES:

Contractor to verify location of all utilities prior to any pile driving.

Minimum Tip Elevation is required for lateral stability.

When a required jetting elevation is shown, the jet shall be lowered to the elevation and continue to operate at this elevation until the pile driving is completed. If jetting or preforming elevations differ from those shown on the table, the Engineer shall be responsible for determination of the required driving resistance.

No jetting will be allowed without the approval of the Engineer.

The Contractor should not anticipate being allowed to jet piles below the minimum tip elevation.

At each Bent, pile driving is to commence at the center of the Bent and proceed outward.

BRIDGE NO. XXXXXX

REVISIONS					
DATE	BY	DESCRIPTION	DATE	BY	DESCRIPTION

	NAMES	DATES
DRAWN BY	ABC	MO-YR
CHECKED BY	DEF	MO-YR
DESIGNED BY	GHI	MO-YR
CHECKED BY	JKL	MO-YR
APPROVED BY	MNO	

ENGINEER OF RECORD:
EOR Name, P.E.
Registration/P.E. No. 000000
Engineering Co. Name/Logo
Address
Certificate of Authorization No.

FLORIDA DEPARTMENT OF TRANSPORTATION

ROAD NO.	COUNTY	FINANCIAL PROJECT ID
XXX	XXXX	123456-1-12-12

SHEET TITLE: PILE DATA TABLE

PROJECT NAME: DETAILING MANUAL EXAMPLES

SHEET NO. EX-7b

NOTICE: THE OFFICIAL RECORD OF THIS SHEET IS THE ELECTRONIC FILE SIGNED AND SEALED UNDER RULE 61G15-23.003, F.A.C.

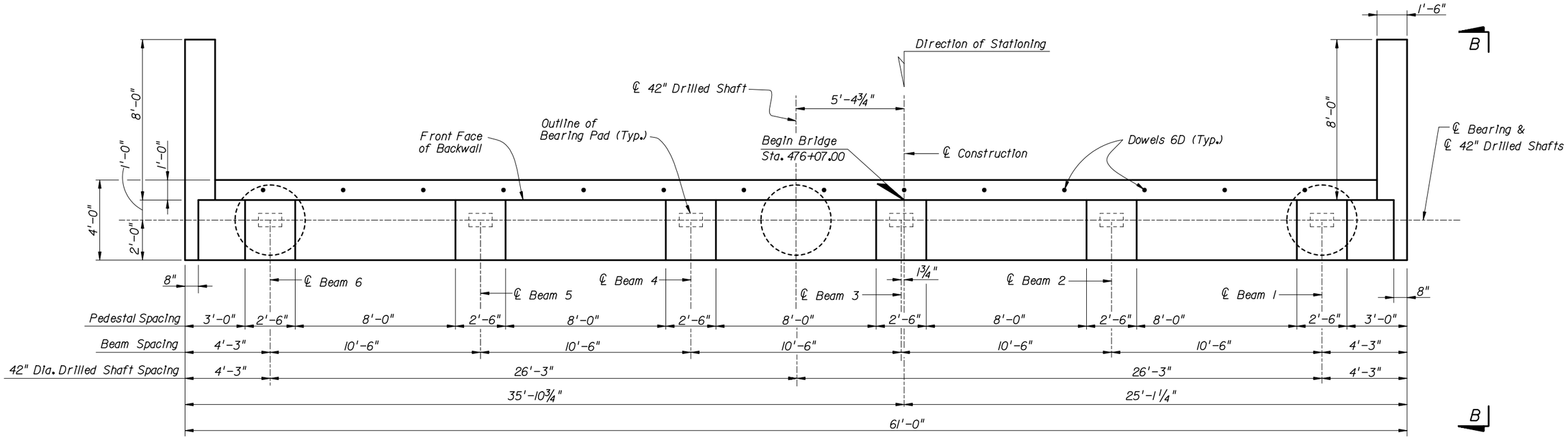

PLAN

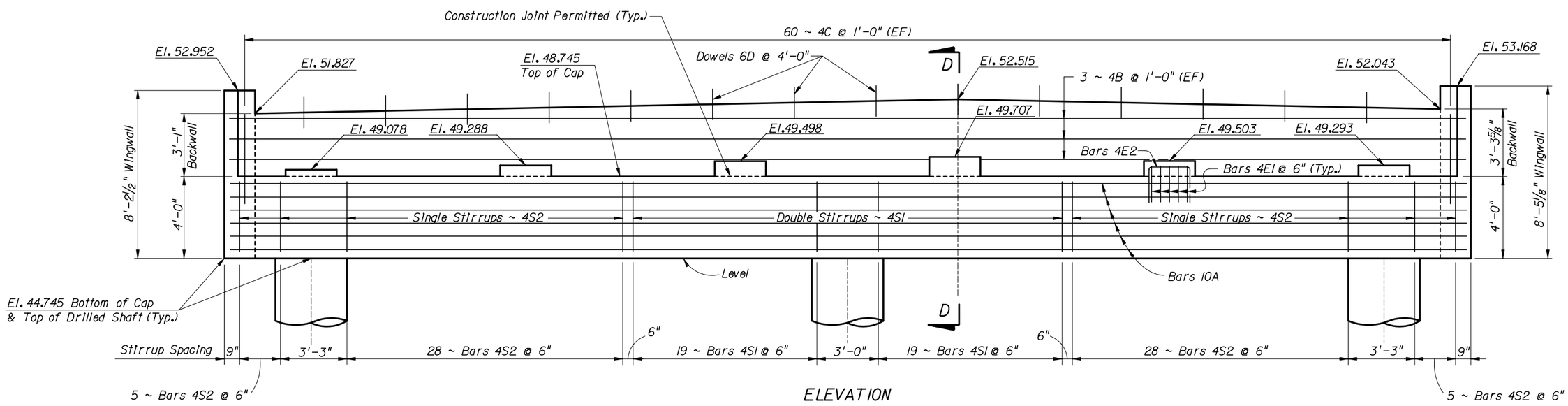

ELEVATION

NOTES:
1. For Sections B-B & D-D see sheet B-xx.
2. For Drilled Shaft Details see sheet B-xx.
3. For Reinforcing Bar List see sheet B-xx.

EF = Each Face

ESTIMATED QUANTITIES END BENT NO. 1		
ITEM	UNIT	QUANTITY
Class IV Concrete (Substructure)	C.Y.	52.10
Reinforcing Steel (Substructure)	LB.	7803

BRIDGE NO. XXXXXX

REVISIONS

DATE	BY	DESCRIPTION	DATE	BY	DESCRIPTION

	NAMES	DATES
DRAWN BY	ABC	MO-YR
CHECKED BY	DEF	MO-YR
DESIGNED BY	GHI	MO-YR
CHECKED BY	JKL	MO-YR
APPROVED BY	MNO	

ENGINEER OF RECORD:
EOR Name, P.E.
Registration/P.E. No. 000000
Engineering Co. Name/Logo
Address
Certificate of Authorization No.

FLORIDA DEPARTMENT OF TRANSPORTATION

ROAD NO.	COUNTY	FINANCIAL PROJECT ID
XXX	XXXX	123456-1-12-12

SHEET TITLE: END BENT NO. 1

PROJECT NAME: DETAILING MANUAL EXAMPLES

SHEET NO. EX-8

NOTICE: THE OFFICIAL RECORD OF THIS SHEET IS THE ELECTRONIC FILE SIGNED AND SEALED UNDER RULE 61G15-23.003, F.A.C.

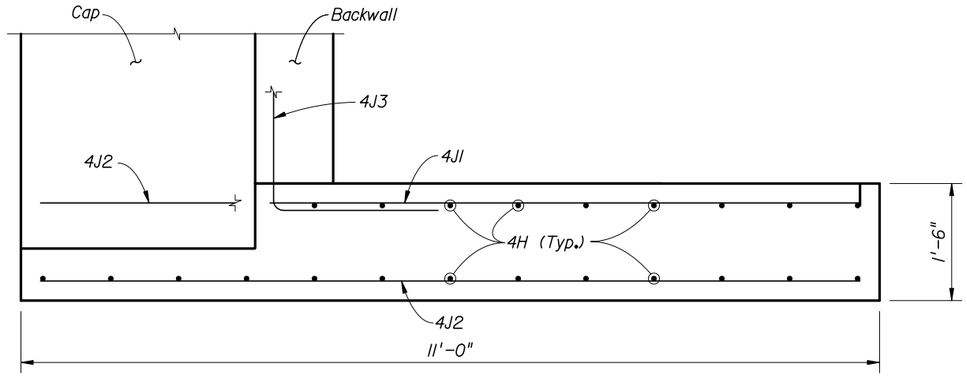

WINGWALL PLAN

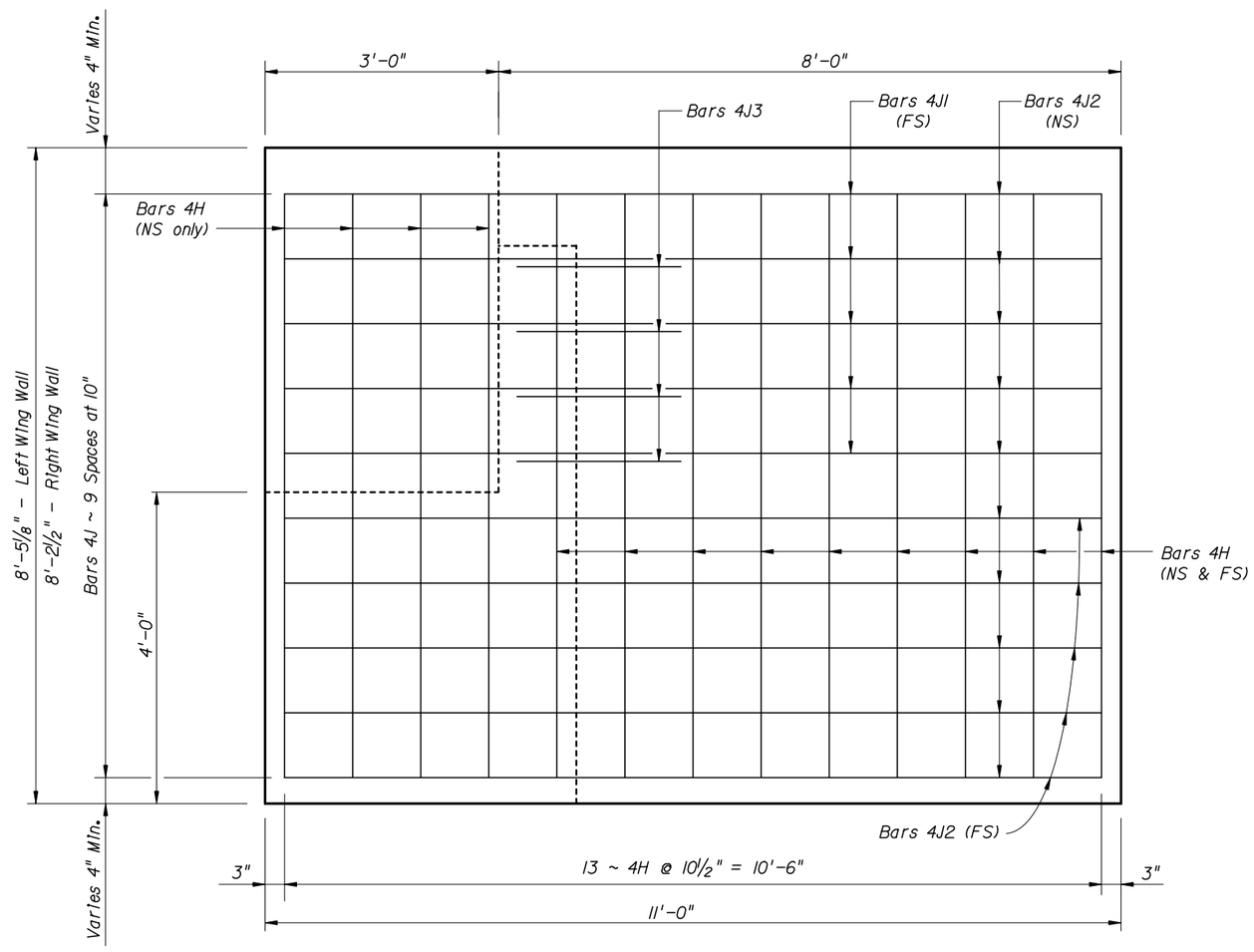

VIEW B-B

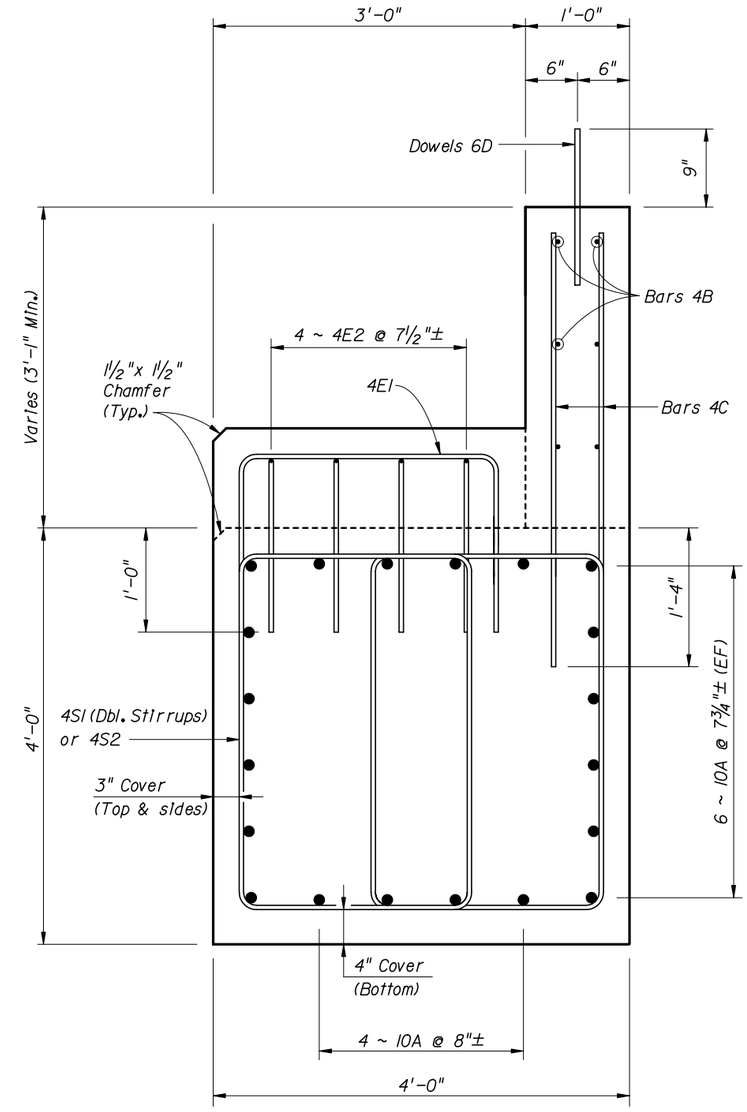

SECTION D-D

NOTES:
1. For location of View B-B and Section D-D see sheet B-xx.
2. For Reinforcing Bar List see sheet B-xx.

EF = Each Face.

BRIDGE NO. XXXXXX

REVISIONS					
DATE	BY	DESCRIPTION	DATE	BY	DESCRIPTION

	NAMES	DATES
DRAWN BY	ABC	MO-YR
CHECKED BY	DEF	MO-YR
DESIGNED BY	GHI	MO-YR
CHECKED BY	JKL	MO-YR
APPROVED BY	MNO	

ENGINEER OF RECORD:
EOR Name, P.E.
Registration/P.E. No. 000000
Engineering Co. Name/Logo
Address
Certificate of Authorization No.

FLORIDA DEPARTMENT OF TRANSPORTATION

ROAD NO.	COUNTY	FINANCIAL PROJECT ID
XXX	XXXX	123456-1-12-12

SHEET TITLE: END BENT DETAILS

PROJECT NAME: DETAILING MANUAL EXAMPLES

SHEET NO. EX-9

NOTICE: THE OFFICIAL RECORD OF THIS SHEET IS THE ELECTRONIC FILE SIGNED AND SEALED UNDER RULE 61G15-23.003, F.A.C.

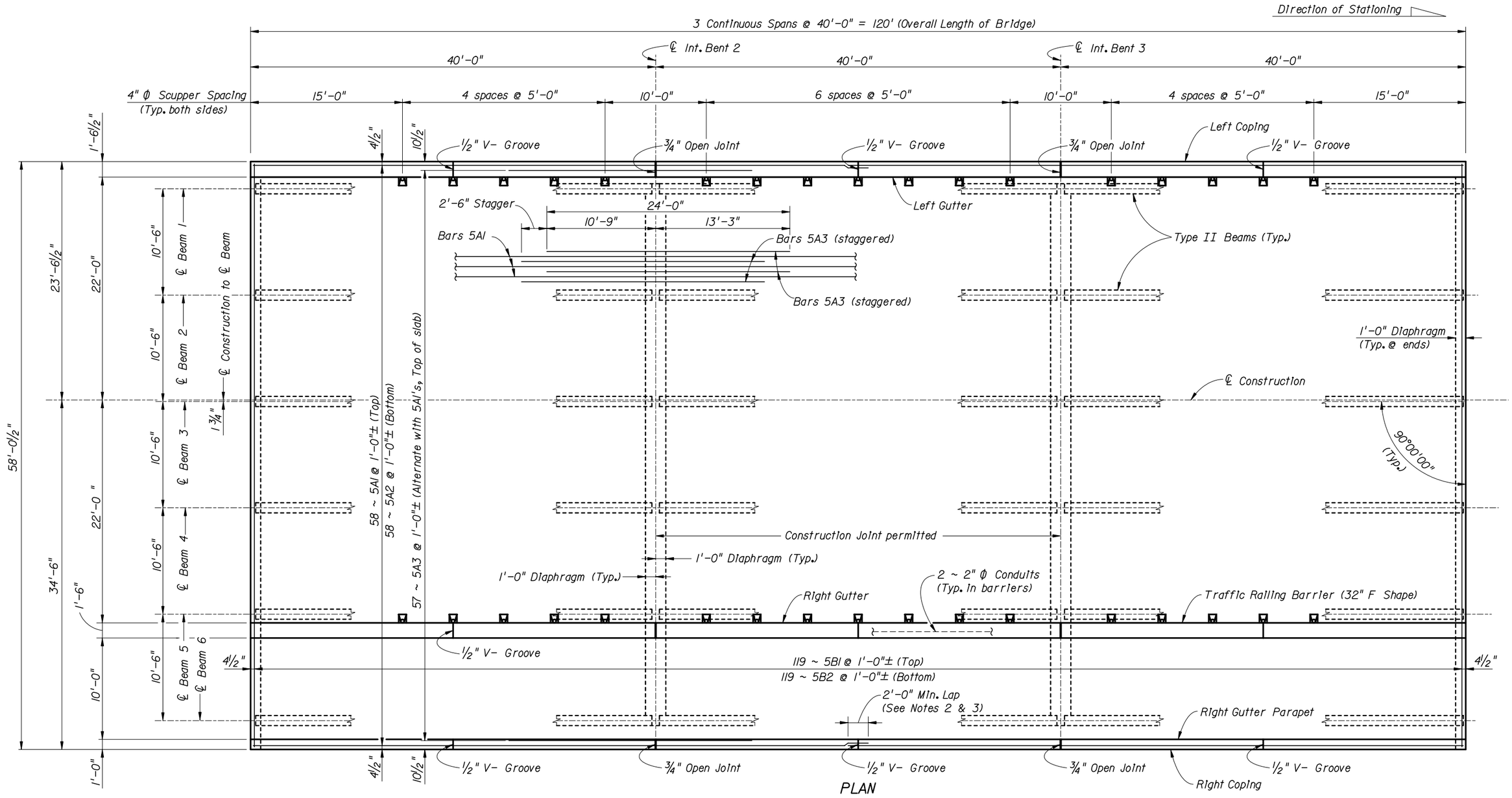

PLAN

NOTES:

1. Minimum Lap for Bars 5A1 and 5A2 = 2'-0".
2. Lap all Bars 5A1 at midspan of Span 2.
3. Lap all Bars 5A2 over ℄ of intermediate bents.
4. Slab Construction Joints permitted at ℄ of intermediate Bents.
5. Place Alternating Bars 5A3 staggered 2'-6" each side of Bent ℄.
6. 3/4" Open Joints in barriers and parapets ℄ intermediate Bents.
7. 1/2" V-Groove in barriers and parapets at midspans of Spans 1, 2 & 3
8. For Reinforcing Bar List see Sheet B-xx.

ESTIMATED QUANTITIES		
ITEM	UNIT	QUANTITY
Class II Concrete (Superstructure)	CY	
Reinforcing Steel (Superstructure)	LB	
Traffic Railing Barrier	LF	
Concrete Parapet	LF	

BRIDGE NO. XXXXXX

REVISIONS

DATE	BY	DESCRIPTION	DATE	BY	DESCRIPTION

	NAMES	DATES
DRAWN BY	ABC	MO-YR
CHECKED BY	DEF	MO-YR
DESIGNED BY	GHI	MO-YR
CHECKED BY	JKL	MO-YR
APPROVED BY	MNO	

ENGINEER OF RECORD:
EOR Name, P.E.
Registration/P.E. No. 000000
Engineering Co. Name/Logo
Address
Certificate of Authorization No.

FLORIDA DEPARTMENT OF TRANSPORTATION

ROAD NO.	COUNTY	FINANCIAL PROJECT ID
XXX	XXXX	123456-1-12-12

SHEET TITLE: 120'-0" 3 SPAN CONTINUOUS UNIT SUPERSTRUCTURE

PROJECT NAME: DETAILING MANUAL EXAMPLES

SHEET NO. EX-10

NOTICE: THE OFFICIAL RECORD OF THIS SHEET IS THE ELECTRONIC FILE SIGNED AND SEALED UNDER RULE 61G15-23.003, F.A.C.

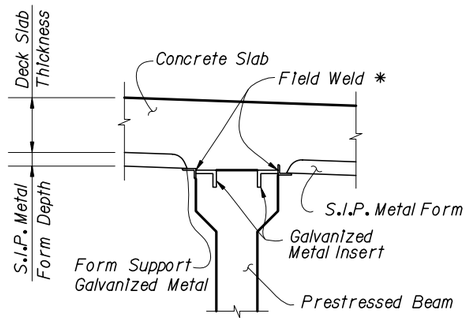

DETAIL "A"

* Note: Electrical grounding to reinforcing steel is prohibited.

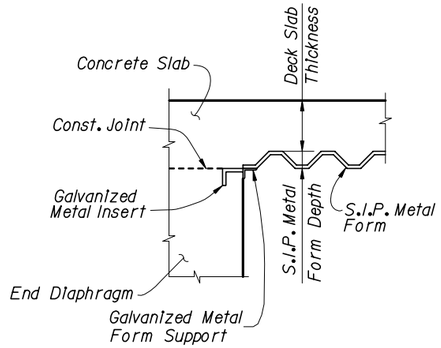

PARTIAL SECTION THRU END OF SPAN

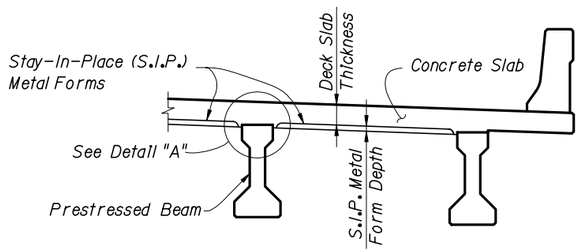

PARTIAL SECTION THRU SUPERSTRUCTURE

STAY-IN-PLACE FORM DETAILS

STAY-IN-PLACE METAL FORM NOTES:

1. The Superstructure Concrete Quantities shown do not include the concrete required to fill the stay-in-place metal form flutes.
2. The cost of the stay-in-place metal forms, the concrete required to fill the flutes, the metal form attachments and accessories and all miscelleneous items required to install the forms shall be included in the Contract Unit Price for the Superstructure Concrete.

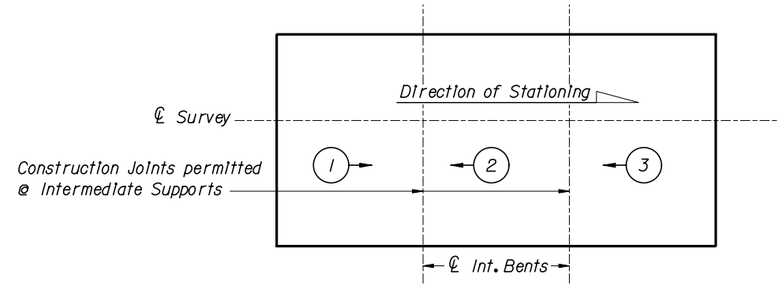

SLAB POURING SCHEDULE

(X) → Direction and sequence of deck slab pour

SLAB POURING NOTES:

1. Place no unit adjacent to a previously placed unit which is not a minimum of 72 hours old.
2. After placement of the first unit, begin succeeding placements at the end away from and proceed toward the previously placed unit.
3. A revised casting sequence may be submitted for approval. Submit structural analysis and its effect on the Camber Diagram. Revise per Chapter 28 of the Plans Preparation Manual - Volume 1.

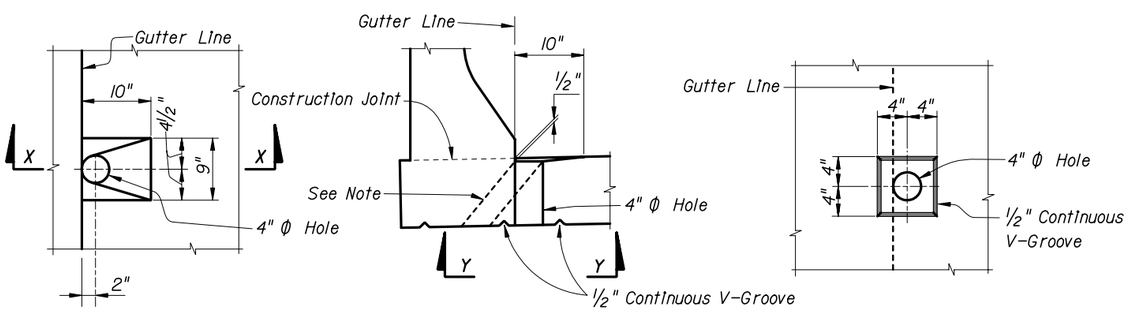

PLAN

SECTION X-X

VIEW Y-Y

DRAIN DETAILS

NOTE: 4" Ø Hole need not be plumb, however do not direct drainage onto the girder below.

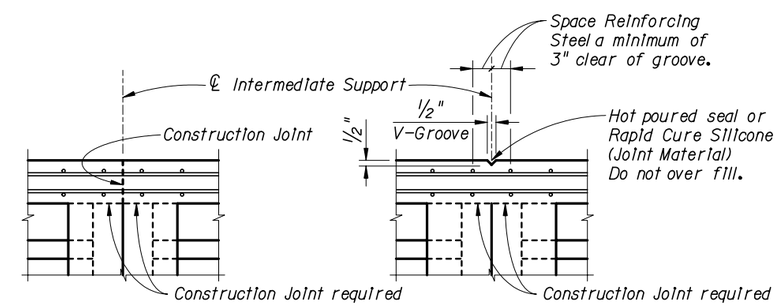

DETAIL B
(@ Construction Joints)

DETAIL C
(@ Continuous Joints)

JOINT DETAILS

NOTES:

1. Use Detail B where a pour terminates at an intermediate support.
2. Use Detail C where slab pours are continuous over intermediate supports.
3. Cost of constructing Detail C shall be included in the deck concrete. The Contractor shall construct either a tooled groove or V-groove placed prior to the concrete obtaining initial set.
5. Rapid Cure Silicone (Joint Material) may be used in lieu of Hot Poured Seal in groove. Groove shall be clean & free of grease & debris before filling the groove.

BRIDGE NO. XXXXXX

REVISIONS					
DATE	BY	DESCRIPTION	DATE	BY	DESCRIPTION

	NAMES	DATES
DRAWN BY	ABC	MO-YR
CHECKED BY	DEF	MO-YR
DESIGNED BY	GHI	MO-YR
CHECKED BY	JKL	MO-YR
APPROVED BY	MNO	

ENGINEER OF RECORD:
EOR Name, P.E.
Registration/P.E. No. 000000
Engineering Co. Name/Logo
Address
Certificate of Authorization No.

FLORIDA DEPARTMENT OF TRANSPORTATION

ROAD NO.	COUNTY	FINANCIAL PROJECT ID
XXX	XXXX	123456-1-12-12

SHEET TITLE: SUPERSTRUCTURE DETAILS

PROJECT NAME: DETAILING MANUAL EXAMPLES

SHEET NO. EX-11

NOTICE: THE OFFICIAL RECORD OF THIS SHEET IS THE ELECTRONIC FILE SIGNED AND SEALED UNDER RULE 61G15-23.003, F.A.C.

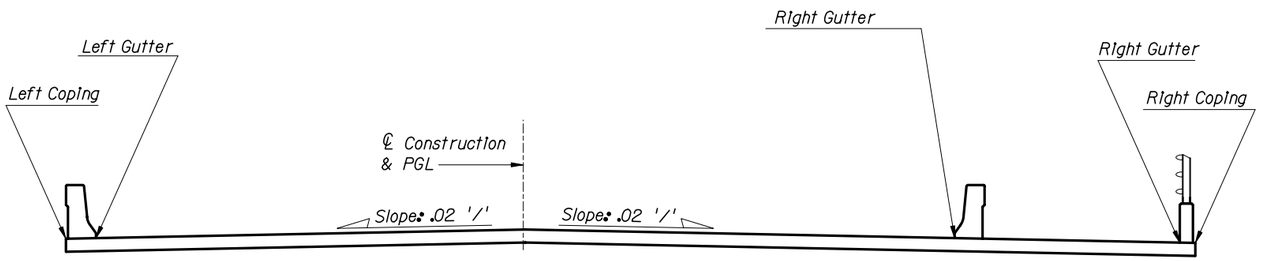

APPROACH SLAB SECTION SHOWING FINISH GRADE ELEVATION POINTS

APPROACH SLAB 1				
LOCATION \ T-LINES & BENTS	BEGIN APP. SLAB	1	2	BEGIN BRIDGE
Left Coping	53.579	53.432	53.295	53.168
Left Gutter	53.610	53.463	53.326	53.199
CL Construction & PGL	54.050	53.903	53.766	53.639
Right Gutter	53.610	53.463	53.326	53.199
Right Gutter Parapet	53.379	53.233	53.095	52.968
Right Coping	53.363	53.216	53.079	52.952

APPROACH SLAB 2				
LOCATION \ T-LINES & BENTS	END BRIDGE	1	2	END APP. SLAB
Left Coping	52.487	52.481	52.475	52.469
Left Gutter	52.518	52.512	52.506	52.500
CL Construction & PGL	52.958	52.952	52.946	52.938
Right Gutter	52.518	52.512	52.506	52.500
Right Gutter Parapet	52.287	52.281	52.275	52.269
Right Coping	52.271	52.265	52.259	52.253

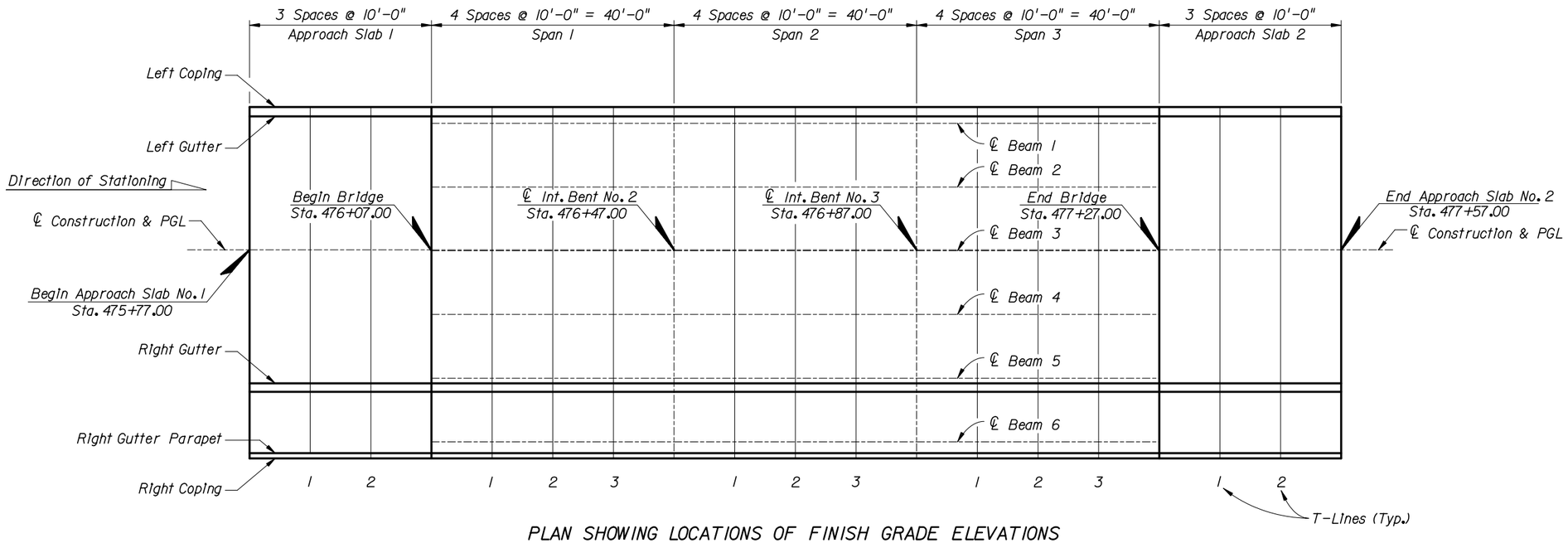

PLAN SHOWING LOCATIONS OF FINISH GRADE ELEVATIONS

BRIDGE NO. XXXXXX

REVISIONS

DATE	BY	DESCRIPTION	DATE	BY	DESCRIPTION

	NAMES	DATES
DRAWN BY	ABC	MO-YR
CHECKED BY	DEF	MO-YR
DESIGNED BY	GHI	MO-YR
CHECKED BY	JKL	MO-YR
APPROVED BY	MNO	

ENGINEER OF RECORD:
EOR Name, P.E.
Registration/P.E. No. 000000
Engineering Co. Name/Logo
Address
Certificate of Authorization No.

FLORIDA DEPARTMENT OF TRANSPORTATION

ROAD NO.	COUNTY	FINANCIAL PROJECT ID
XXX	XXXX	123456-1-12-12

SHEET TITLE: FINISH GRADE ELEVATIONS (SHEET 1 OF 2)

PROJECT NAME: DETAILING MANUAL EXAMPLES

SHEET NO. EX-12

NOTICE: THE OFFICIAL RECORD OF THIS SHEET IS THE ELECTRONIC FILE SIGNED AND SEALED UNDER RULE 61G15-23.003, F.A.C.

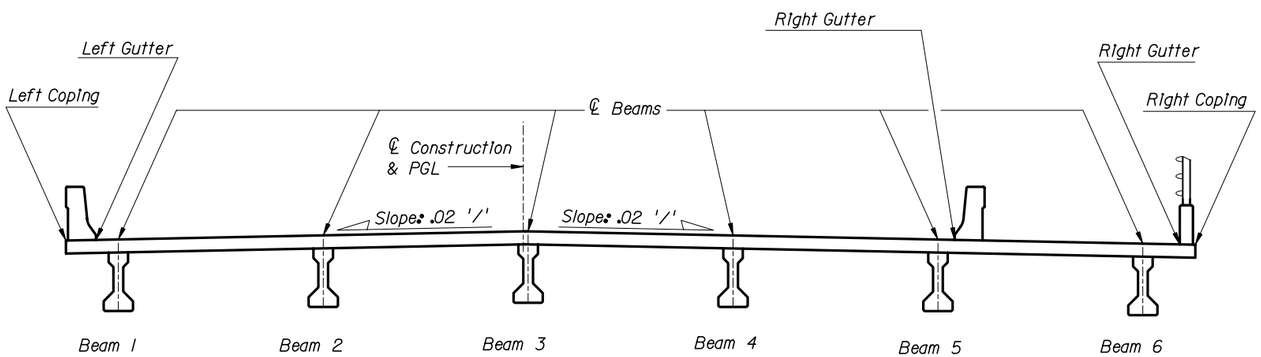

SUPERSTRUCTURE SECTION SHOWING FINISH GRADE ELEVATION POINTS

SPAN 1

LOCATION \ T-LINES & BENTS	BEGIN BRIDGE	1	2	3	INT. BENT NO. 2
Left Coping	53.168	53.051	52.944	52.847	52.760
Left Gutter	53.199	53.082	52.975	52.877	52.790
Beam 1	53.222	53.105	52.998	52.900	52.813
Beam 2	53.432	53.315	53.208	53.110	53.023
CL Construction & PGL	53.639	53.522	53.415	53.318	53.230
Beam 3	53.636	53.519	53.412	53.315	53.227
Beam 4	53.426	53.309	53.202	53.105	53.017
Beam 5	53.216	53.099	52.992	52.895	52.807
Right Gutter	53.199	53.082	52.975	52.877	52.790
Beam 6	53.006	52.889	52.782	52.685	52.597
Right Gutter Parapet	52.968	52.851	52.744	52.647	52.560
Right Coping	52.952	52.835	52.728	52.631	52.544

SPAN 2

LOCATION \ T-LINES & BENTS	INT. BENT. NO. 2	1	2	3	INT. BENT NO. 3
Left Coping	52.760	52.682	52.615	52.558	52.511
Left Gutter	52.790	52.713	52.646	52.589	52.542
Beam 1	52.813	52.736	52.669	52.612	52.565
Beam 2	53.023	52.946	52.879	52.822	52.775
CL Construction & PGL	53.230	53.153	53.086	53.029	52.982
Beam 3	53.227	53.150	53.083	53.026	52.979
Beam 4	53.017	52.940	52.873	52.816	52.769
Beam 5	52.807	52.730	52.663	52.606	52.559
Right Gutter	52.790	52.713	52.646	52.589	52.542
Beam 6	52.597	52.520	52.453	52.396	52.349
Right Gutter Parapet	52.560	52.482	52.415	52.358	52.311
Right Coping	52.544	52.467	52.400	52.342	52.295

SPAN 3

LOCATION \ T-LINES & BENTS	INT. BENT NO. 3	1	2	3	END BRIDGE
Left Coping	52.511	52.505	52.499	52.493	52.487
Left Gutter	52.542	52.536	52.530	52.524	52.518
Beam 1	52.565	52.559	52.553	52.547	52.541
Beam 2	52.775	52.769	52.763	52.757	52.751
CL Construction & PGL	52.982	52.976	52.970	52.964	52.958
Beam 3	52.979	52.973	52.967	52.961	52.955
Beam 4	52.769	52.763	52.757	52.751	52.745
Beam 5	52.559	52.553	52.547	52.541	52.535
Right Gutter	52.542	52.536	52.530	52.524	52.518
Beam 6	52.349	52.343	52.337	52.331	52.325
Right Gutter Parapet	52.311	52.305	52.299	52.293	52.287
Right Coping	52.295	52.289	52.283	52.277	52.271

BRIDGE NO. XXXXXX

NOTICE: THE OFFICIAL RECORD OF THIS SHEET IS THE ELECTRONIC FILE SIGNED AND SEALED UNDER RULE 61G15-23.003, F.A.C.

REVISIONS

DATE	BY	DESCRIPTION	DATE	BY	DESCRIPTION

	NAMES	DATES
DRAWN BY	ABC	MO-YR
CHECKED BY	DEF	MO-YR
DESIGNED BY	GHI	MO-YR
CHECKED BY	JKL	MO-YR
APPROVED BY	MNO	

ENGINEER OF RECORD:
EOR Name, P.E.
Registration/P.E. No. 000000
Engineering Co. Name/Logo
Address
Certificate of Authorization No.

FLORIDA DEPARTMENT OF TRANSPORTATION

ROAD NO.	COUNTY	FINANCIAL PROJECT ID
XXX	XXXX	123456-1-12-12

SHEET TITLE: FINISH GRADE ELEVATIONS (SHEET 2 OF 2)

PROJECT NAME: DETAILING MANUAL EXAMPLES

SHEET NO. EX-13

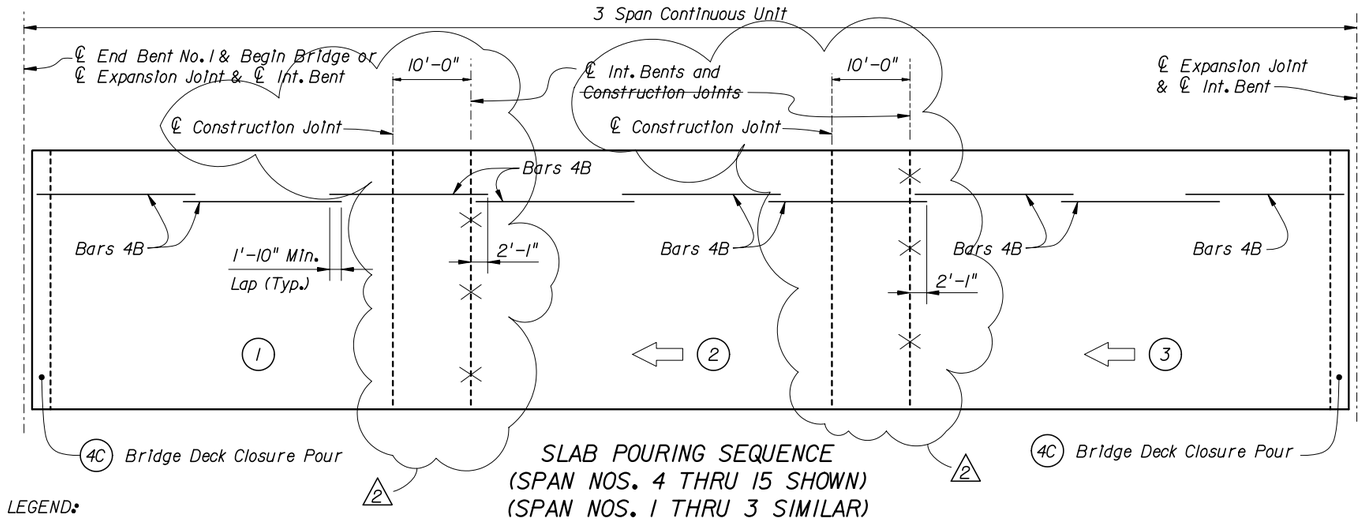

SLAB POURING SEQUENCE
(SPAN NOS. 4 THRU 15 SHOWN)
(SPAN NOS. 1 THRU 3 SIMILAR)

LEGEND:

(3) = Pour Number

⇦ = Direction of Pour

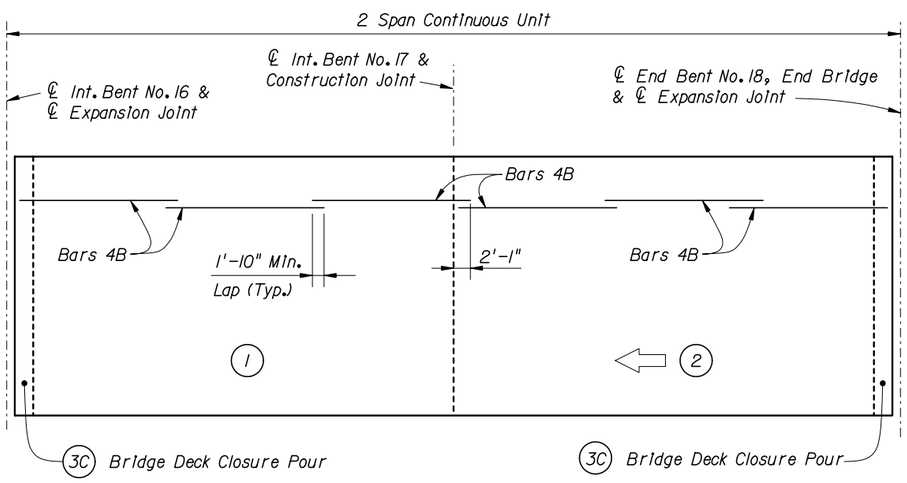

SLAB POURING SEQUENCE
(SPAN NOS. 16 & 17 SHOWN)

NOTES:

No slab pour shall be placed adjacent to a previously placed slab pour that is not a minimum of 72 hours old.

After placement of the first slab pour, succeeding placements shall begin at the end away from and proceed toward the previously placed slab pour.

At the Contractor's option, both the slab pouring sequence and direction of pours may be reversed.

Closure Pours (3C) & (4C) shall be made after profiling operations have been completed for the adjoining Units.

SUMMARY OF ESTIMATED QUANTITIES

ITEM	UNIT	QUANTITY		
		PHASE 1	PHASE 2	TOTAL
Class IV Concrete (Superstructure)	C.Y.	△1 2960.3	1530.9	△1 4491.2
Reinforcing Steel (Superstructure)	LB.	550501	284953	835454
Traffic Railing Barrier (Corral Barrier)	L.F.	2043.4	2036.6	4080.0
Concrete Parapet with Aluminum Railing	L.F.	2044.5	2033.9	4078.4
Guide Rail	L.F.	-	2034.9	2034.9

CONCRETE AND REINFORCING STEEL BREAKDOWN

CONTINUOUS UNIT	CONCRETE - PHASE 1		CONCRETE - PHASE 2		CONCRETE TOTAL (C.Y.)	REINFORCING STEEL PHASE 1 (LBS)	REINFORCING STEEL PHASE 2 (LBS)	REINFORCING STEEL TOTAL (LBS)
	SLAB (C.Y.)	DIAPHRAGMS (C.Y.)	SLAB (C.Y.)	DIAPHRAGMS (C.Y.)				
Span Nos. 1-3	497.1	49.0	239.4	25.0	810.5	99288	49690	148978
Span Nos. 4-6	474.9	47.4	250.8	23.4	796.5	96854	50489	147343
Span Nos. 7-9	469.1	47.4	247.2	23.4	787.1	96854	50489	147343
Span Nos. 10-12	469.1	47.4	~~247.2~~ 285.3	23.4	~~787.1~~ 825.2	96854	~~50489~~ 53829	~~147343~~ 150683 △3
Span Nos. 13-15	470.2	47.4	247.6	23.4	788.6	96854	50489	147343
Span Nos. 16-17	308.1	33.2	162.9	17.2	521.4	63797	33307	97104
Total	2688.5	271.8	1395.1	135.8	4491.2	550501	284953	835454

BRIDGE NO. XXXXXX

REVISIONS

DATE	BY	DESCRIPTION	DATE	BY	DESCRIPTION
1-15-02	TAA	△1 Modify Concrete Quantity	8-05-02	TAA	△3 Modify concrete & steel quantity, spans 10-12.
6-20-02	TAA	△2 Const. Jt. moved 10'-0".			

	NAMES	DATES
DRAWN BY	ABC	MO-YR
CHECKED BY	DEF	MO-YR
DESIGNED BY	GHI	MO-YR
CHECKED BY	JKL	MO-YR
APPROVED BY	MNO	

ENGINEER OF RECORD:
EOR Name, P.E.
Registration/P.E. No. 000000
Engineering Co. Name/Logo
Address
Certificate of Authorization No.

FLORIDA DEPARTMENT OF TRANSPORTATION

ROAD NO.	COUNTY	FINANCIAL PROJECT ID
XXX	XXXX	123456-1-12-12

SHEET TITLE: SUPERSTRUCTURE DETAILS

PROJECT NAME: DETAILING MANUAL EXAMPLES

SHEET NO. EX-14

NOTICE: THE OFFICIAL RECORD OF THIS SHEET IS THE ELECTRONIC FILE SIGNED AND SEALED UNDER RULE 61G15-23.003, F.A.C.