THE ANALYSIS OF SIMPLE SPAN PRESTRESSED SOLID SLABS AND DOUBLE-TEES

VERSION 1.1

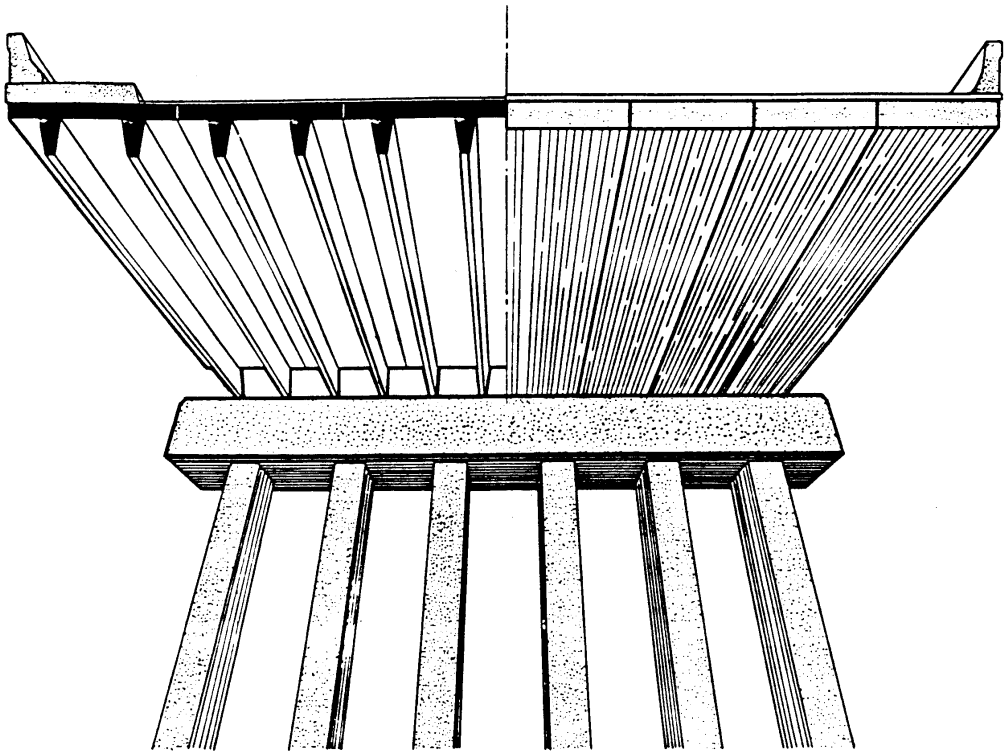

FLORIDA DEPARTMENT OF TRANSPORTATION
STRUCTURES DESIGN OFFICE

JUNE 1995
THE ANALYSIS OF
SIMPLE SPAN PRESTRESSED SOLID-SLABS
AND DOUBLE-TEES
Version 1.1

FLORIDA DEPARTMENT OF TRANSPORTATION
Structures Design Office
June 1995

Prepared By
R. E. Nichols, P.E.

TABLE OF CONTENTS

DESCRIPTION Page

DISCLAIMER 1

ABSTRACT 2

DESIGN CONSIDERATIONS 7

Procedures and Specifications 7

Ultimate Moments and Shears (Load Factor) 8

Location and Placement of Strands 9

Prestress Losses 11

Camber 13

Modulus of Elasticity 15
Tensile Stresses 16
Shear Design 17
Strand Transfer, Development and Embedment Lengths 18
USER INSTRUCTIONS 20
Input Data 20
Output Data 24
Sample 1 Input "Composite Solid Slab/Interior Unit" 47
Typical Output "Sample 1" 49
Sample 2 Input "Bare Double-Tee/Interior Unit" 55
Typical Output "Sample 2" 57
Sample 3 Input "Composite Double-Tee/Exterior Unit" 63
Typical Output "Sample 3" 65
DESCRIPTION OF SUBROUTINES 71
DEFINITIONS 77
BLANK INPUT FORM 85

LIST OF FIGURES

FIGURE	DESCRIPTION	PAGE
1	Section Definitions	3
2	Strand Profiles and Member Length Definitions	4
3	Strand Location and Position Definitions	10
4	Variation of Steel Stress with Distance from Free End of Strand	19
5	Typical Concentrated Loads and Required Distances . .	23
	Blank Input Form	85

LIST OF TABLES

TABLE	DESCRIPTION	PAGE
I	Default Values	5
II	Properties of Seven-Wire Uncoated Strands for Prestressed Concrete	6
III	Input Specifications for Simple Prestressed Solid Slabs and Double-Tees	25

DISCLAIMER

No warranty, expressed or implied, is implied by the Florida Department of Transportation as to the accuracy and functioning of the program text or the results it produces, nor shall the fact of distribution constitute any such warranty, and no responsibility is assumed by the Florida Department of Transportation in any connection therewith.

ABSTRACT

This computer program was developed to analyze simple span prestressed solid slabs and double-tees for highway bridges, and to provide information for corresponding Florida Department of Transportation Structures Standards.

The program is written in FORTRAN 77 language for the IBM 3084Q mainframe computer and IBM compatible microcomputers. It is comprised of a main calling program, sixteen (16) subroutines and one (1) Block Data set. The program was written to accept either straight or depressed strands.

Input of this program may be held to the minimum by using the default design criteria as shown in Table I. Users may over-ride any portion of these default criteria to meet their special requirements.

The output contains the input data reflection, stranding, summary of moments, shears, stresses, etc., tabulated at various points along the component for the different stages of loading.

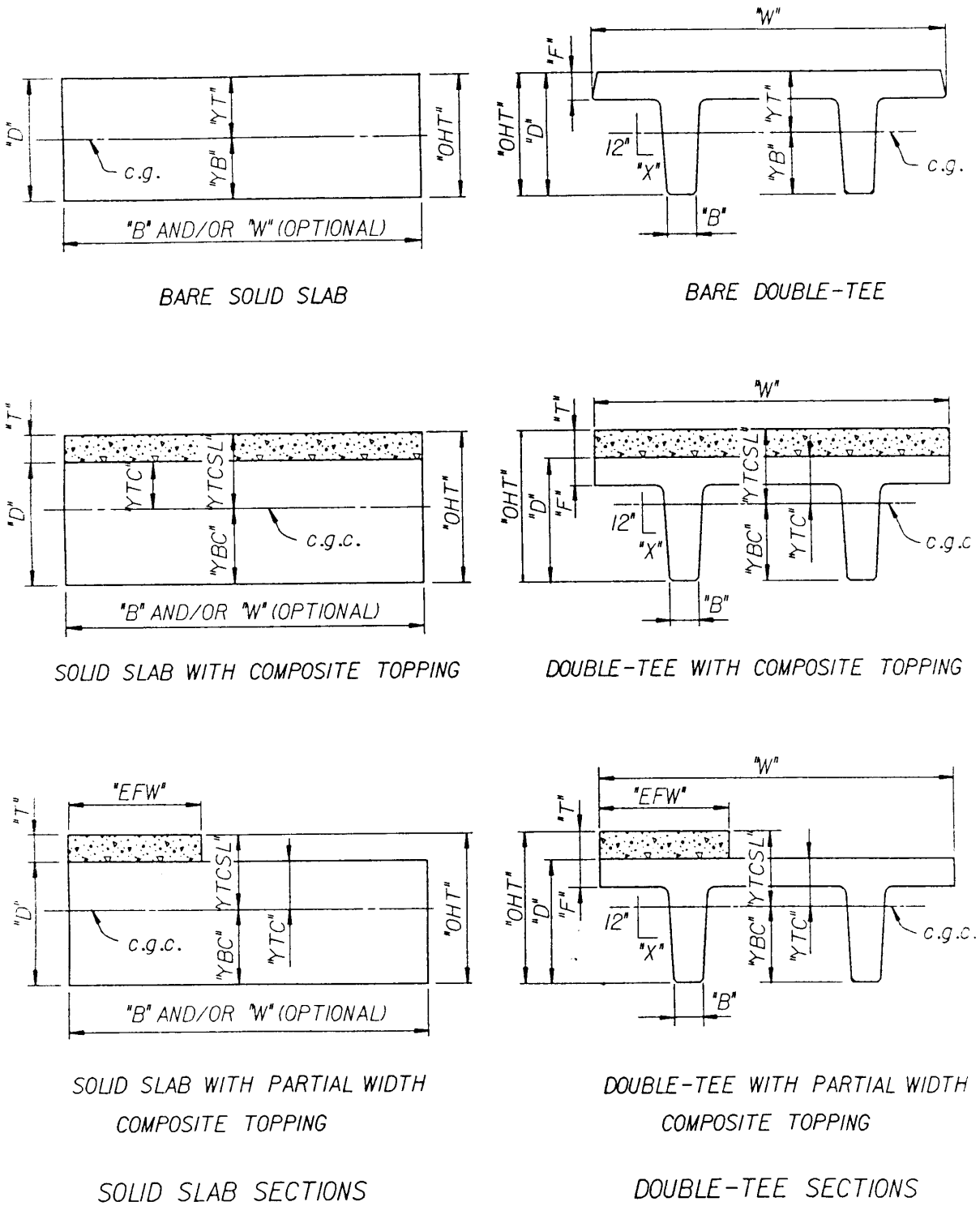

(SHOWING REQUIRED INPUT VARIABLES AND SECTION DIMENSIONS)

FIGURE 1. SECTION DEFINITIONS

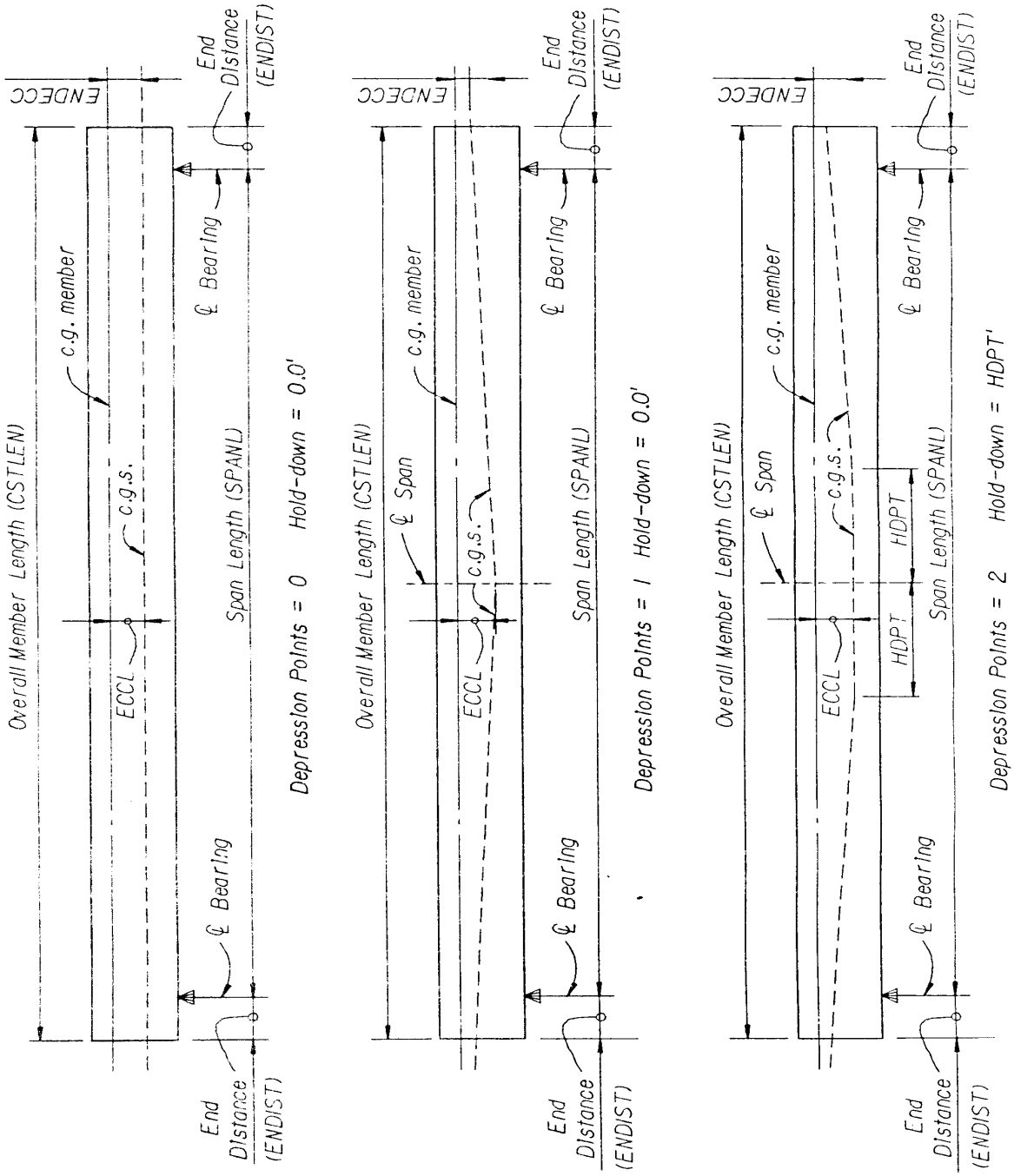

FIGURE 2 . STRAND PROFILES AND MEMBER LENGTH DEFINITIONS

TABLE I. DEFAULT VALUES

1. Environmental Class (ETYPE)	= 3(Extremely Aggressive)
2. Side Slope of Double-Tee Stems	= 0.75 in./ft.
3. Unit Weight of Prestressed Concrete	= 150 pcf.
4. Unit Weight of Concrete Topping	= 150 pcf.
5. End Extension Past Centerline of Bearing	= 8 in.
6. Prestressing Strand Diameter	= ½ in.
7. Prestressing Strand Type	= Stress Relieved (SR)
8. Number of Strand Depression Points	= O(Straight Strand Profile)
9. Ultimate Strength of Prestressing Strand	= 270 ksi.
10. Ultimate Strength of Reinforcing Steel	= 60 ksi.
11. 28-Day Compressive Strength of Topping Concrete	= 3,400 psi.
12. 28-Day Compressive Strength of Prestressed Concrete	= 5,000 psi.
13. Release Strength of Prestressed Concrete	= 4,000 psi
14. Modulus of Elasticity of Prestressing Strand	= 28.0 x 10^6 psi.
15. Allowable Tensile Stress in Top at Release	= -6.0/f'ci
16. Allowable Tensile Stress in Bottom at Service Load:	

Environmental Class	ETYPE	Allowable Tension
Slightly aggressive	1	-6.0/f'c
Moderately aggressive	2	-6.0/f'c
Extremely aggressive	3	-3.0/f'c

17. Live Load Distribution K-Value (AASHTO 3.23.4):

Solid Slabs	=	0.7
Double-Tees	=	2.2

18. Bearing Width = 8.0 In. (Non-Changeable)

TABLE II. PROPERTIES OF SEVEN-WIRE UNCOATED STRANDS FOR PRESTRESSED CONCRETE

GRADE	TYPE	NOM.DIA. (IN.)	DIAMETER (IN.)	AREA (SQ.IN.)	MIN.ULT.STRENGTH (LBS.)	INITIAL PULL (LBS.)
250K	Stress-Relieved	3/8	0.3750	0.080	20,000	14,000
		7/16	0.4375	0.109	27,000	18,900
		½	0.5000	0.144	36,000	25,200
		6/10	0.6000	0.216	54,000	37,800
270K	Stress-Relieved	3/8	0.3750	0.085	23,000	16,070
		7/16	0.4375	0.115	31,000	21,740
		½	0.5000	0.153	41,300	28,920
		1/2S	0.5160	0.167	45,000	31,570
		9/16	0.5625	0.192	51,700	36,290
		9/16S	0.5740	0.196	53,000	37,050
		6/10	0.6000	0.217	58,600	41,020
270K	Low Relaxation	3/8	0.3750	0.085	23,000	17,220
		7/16	0.4375	0.115	31,000	23,290
		½	0.5000	0.153	41,300	30,990
		1/2S	0.5160	0.167	45,000	33,820
		9/16	0.5625	0.192	51,700	38,880
		9/16S	0.5740	0.196	53,000	39,690
		6/10	0.6000	0.217	58,600	43,950

DESIGN CONSIDERATIONS

Procedures and Specifications

The designs produced by this program are based on currently acceptable design procedures as prescribed by the following specifications:

1. 1983 AASHTO Specifications for Highway Bridges
   (Including 1984 through 1988 Interim Specifications)

2. 1983 American Standard Building Code Requirements for Reinforced
   Concrete (ACI 318-83)

3. PCI Journal, Vol. 20, No. 4, July-August 1975, Pages 43-75

ULTIMATE MOMENTS AND SHEARS (LOAD FACTOR) (AASHTO 3.22 and 9.14)

Group I: $M_u(V_u) \;'\; \frac{1.3}{\Phi} \; x \; [D \;\%\; \frac{5}{3} \; (L \;\%\; I)]$

Group IA: $M_u(V_u) \;'\; \frac{1.3}{\Phi} \; x \; [D \;\%\; 2.2 \; (L \;\%\; I)]$

Where: Φ = 1.0 for flexure for factory produced prestressed concrete members

Φ = 0.9 for shear

Cracking Moment:

$$M_{cr} \;'\; ZBBC \; [FCR\sqrt{FPC} \;\%\; FBP(1.0 \;\&\; PLOSS)] \;\&\; (ZBBC \;\&\; ZBB) \; (FBDL \;\%\; FBNCDL)$$

Where: Terms are described in **DEFINITIONS**

The cracking moment is considered to be applicable only over the "flexural" portion of the member's length which is assumed to be the mid-60% of the span length, symmetrical about the centerline of span.

LOCATION AND POSITION OF STRANDS

Strand locations as used by the program are defined as the total number of strands in each row (in both stems of double-tees) at both the center of the member between hold-down points and at the extreme end of the member (not at the centerline of bearing) without regard as to whether the strands in any row are straight or depressed or a combination thereof. Neither the number of rows of strands nor the number of strands in each row at the center and end need be the same, but the total number of strands at each location must agree.

Strand positions as used by the program are defined as the vertical placement of rows of strands by dimensioning at both the center of the member between hold-down points and at the extreme end of the member (again, not at the centerline of bearing). At either place, the first row is dimensioned from the bottom of the member and each additional row is dimensioned from the preceding row (see Figure 3).

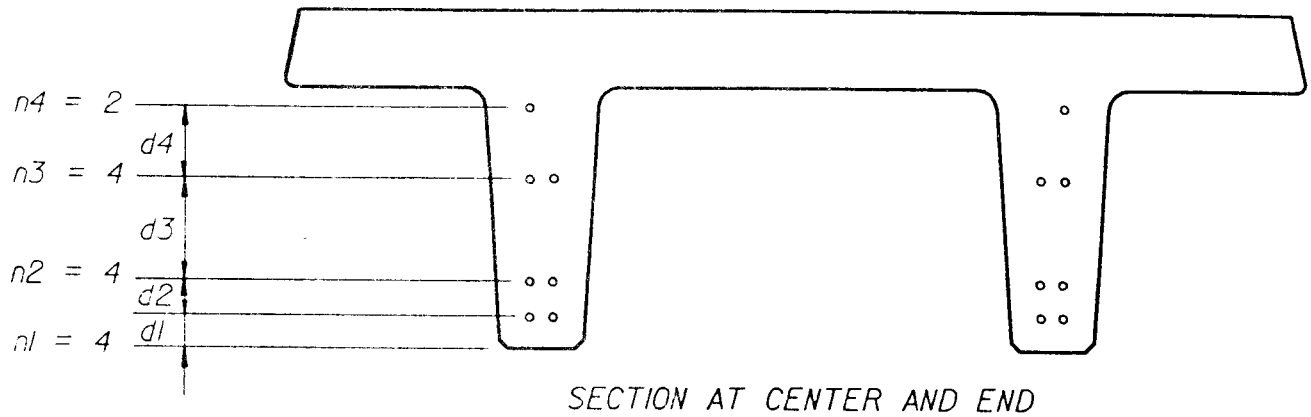

SECTION AT CENTER AND END
DOUBLE-TEE WITH STRAIGHT STRANDS

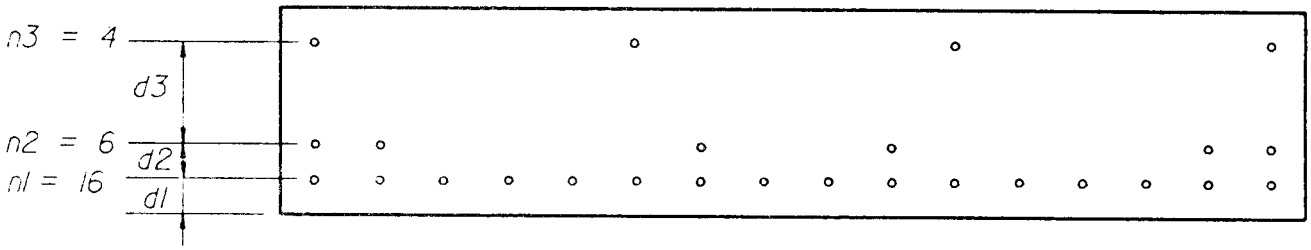

SECTION AT CENTER

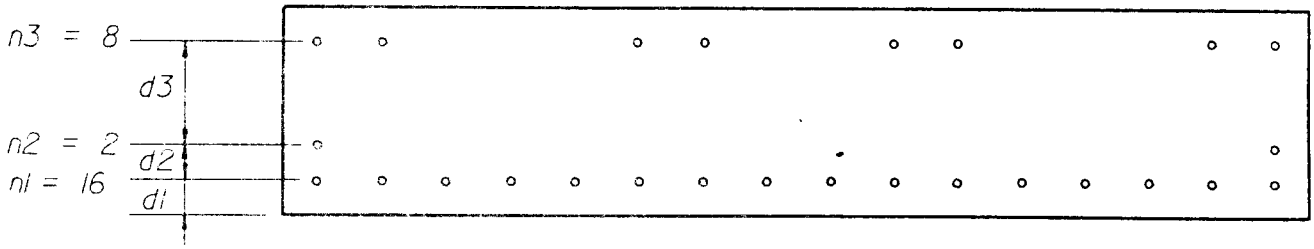

SECTION AT END

SOLID SLAB WITH DEPRESSED STRANDS

NOTE: d1,d2 ---------- dn = Strand Positions
n1,n2---------- nn = Strand Locations

FIGURE 3. STRAND LOCATION AND POSITION DEFINITIONS

PRESTRESS LOSSES: (AASHTO 9.16.2)

The predicted loss of prestress is computed as:

$$\hat{I}f_s \;'\; SH \;\%\; ES \;\%\; CR_c \;\%\; CR_s$$

SH (SHRINKAGE):

SH = 17,000 - 150 RH

RH = 75 (Florida)

ES (ELASTIC SHORTENING):

$$ES = \frac{E_s}{E_{ci}} \; f_{cir}$$

$$E_{ci} \;'\; (0.9)\;(33)\; W_c \;\sqrt[\frac{3}{2}]{f_{ci}} \qquad (Florida)$$

$$W_c \;'\; [\; Unit\ weight\ of\ beam\ concrete \;\&\; 8.0 \;] \quad (\; Default \;'\; 142.0\ PCF \;)$$

Cr_c (CREEP OF CONCRETE):

$CR_c = 12f_{cir} - 7f_{cds}$

$$f_{cds} \;'\; \frac{(M_{sldl})e}{I} \;\%\; \frac{(Mcdl)[e \;\%\; (\bar{y})\&\bar{y})]}{I^{)}}$$

Now, using the following constants:

Constant	Stress-Relieved	Stabilized
C1	0.70	0.75
C2	0.85	0.90
C3	20,000.00	5,000.00
C4	0.40	0.10
C5	0.20	0.05
C7	10.00	45.00

$$CR_s \;'\; C3 \;\&\; C4(ES) \;\&\; C5(SH \;\%\; CR_c)$$

$$CR \;'\; \frac{(Log\ t)}{10}\; [(\frac{f_{si}}{f_y} \;\&\; 0.55)\; f_{si}]$$

Calculations -
At release (assume 18 hours):

$$CR_{s18} \;'\; \frac{(Log\ 18)\;(C1\ x\ f_s^{)} \;\&\; 0.55\ x\ C2\ x\ f_s^{)})\;(C1\ x\ f_s^{)})}{(C7)\;(C2\ x\ f_s^{)})}$$

Stress at 18 hours = [Initial Pull] - [Creep of steel (18 hrs.)] - [Elastic Shortening]

$$f_{s18} = C1 \times f_s' - CR_{s18} - ES$$

$$f_{s18} + ES = C1 \times f_s' - CR_{s18}$$

$$f_{s18} + \frac{ES}{E_{ci}} \times f_{cir} = C1 \times f_s' - CR_{s18}$$

$$f_{s18} + \frac{n\ (A_s)\ (f_{s18})}{A_c} + \frac{(A_s)\ (f_{s18})\ (e)^2}{I_c} - \frac{(M_{bmd1})\ (e)}{I_c} = C1 \times f_s' - CR_{s18}$$

$$f_{s18} + n\ (f_{s18})\ (A_s)\ \left[\ \frac{1}{A_c} + \frac{(e)^2}{I_c}\ \right] = C1 \times f_s' - CR_{s18} + \frac{n\ (M_{bmd1})\ e}{I_c}$$

$$f_{s18} = \frac{C1 \times f_s' - CR_{s18} + n\ (M_{bmd1})\ e\ /\ I_c}{1.0 + n\ (A_s)\ \left[\ \frac{1}{A_c} + \frac{(e)^2}{I_c}\ \right]}$$

$$ES = C1 \times f_s' - CR_{s18} - f_{s18}$$

$$f_{cir} = f_{s18}\ (A_s)\ \left[\ \frac{1}{A_c} + \frac{(e)^2}{I_c}\ \right] - \frac{e\ (M_{bmd1})}{I_c}$$

$$f_{cds} = \frac{e\ (M_{sld1})}{I_c} + \frac{(M_{cd1})\ [\ e + (\overline{Y}' - \overline{Y})\ ]}{I'}$$

$$CR_c = 12\ f_{cir} - 7\ f_{cds}$$

$$CR_s = C3 - C4\ (ES) - C5\ (SH + CR_c)$$

$$TOTAL\ LOSS = SH + ES + CR_c + CR_s$$

$$LOSS\ AT\ RELEASE = \frac{(C1 \times f_s' - f_{s18})}{C1 \times f_s'}$$

CAMBER

Predicted maximum camber is computed by the conjugate beam method.

Where:

M1 = Resisting moment from all strands at end of beam.

M2 = Resisting moment from all strands at center portion of beam between hold downs. For straight strands, M2 equals M1.

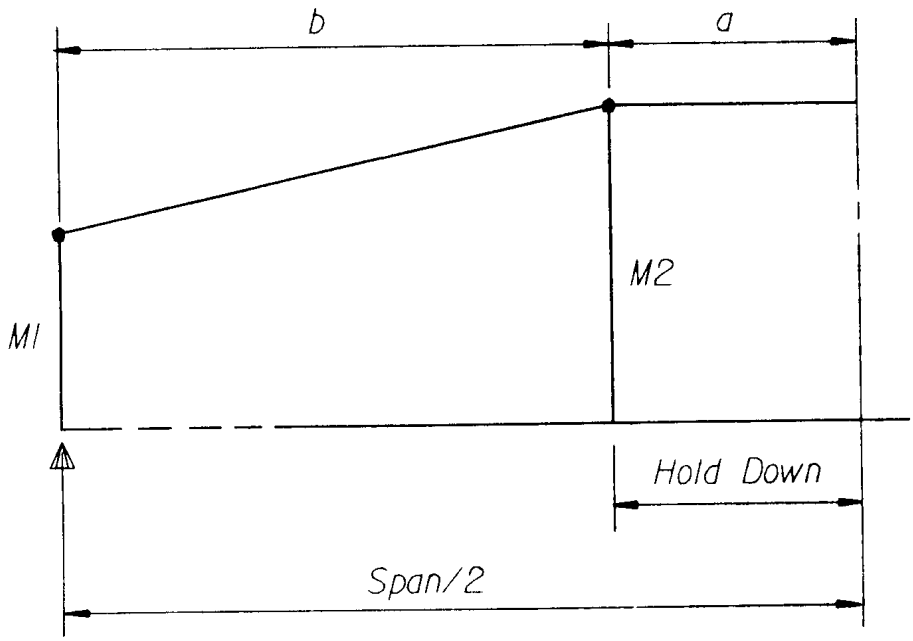

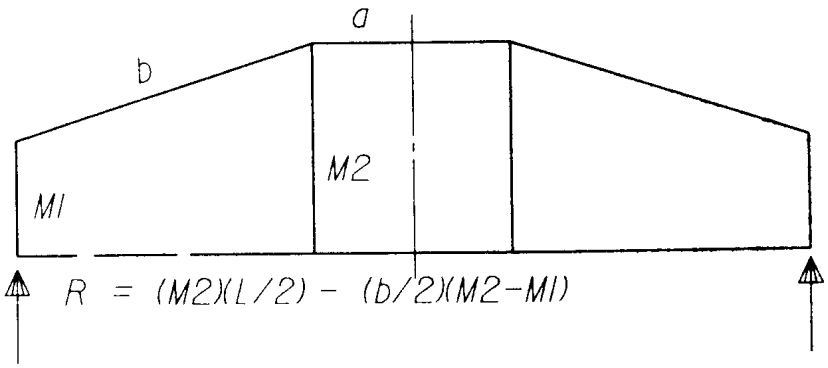

$$EI\ M_c\ '\ M2\ \frac{(L)}{2}\ \frac{(L)}{2}\ \&\ \frac{b}{2}\ (M2\ \&\ M1)\ \frac{(L)}{2}\ \&\ M2\ \frac{(L)}{2}\ \frac{(L)}{4}\ \%\ \frac{b}{2}\ (M2\ \&\ M1)\ (a\ \%\ \frac{2b}{3})$$

$$'\ \frac{M2\ (L)^2}{4}\ \&\ \frac{M2\ (L)^2}{8}\ \%\ (M2\ \&\ M1)\ (a\ \%\ \frac{2b}{3}\ \&\ \frac{L}{2})\ (\frac{b}{2})$$

$$'\ \frac{M2\ (L)^2}{8}\ \%\ (M2\ \&\ M1)\ [\ 6a\ \%\ 4b\ \&\ 3L\ ]\ \frac{(b)}{12}$$

$$'\ \frac{M2\ (L)^2}{8}\ \%\ \frac{(M2\ \&\ M1)\ [\ 6a\ \%\ 4\ (L/2\ \&\ a)\ \&\ 3L\ ]\ (L/2\ \&\ a)}{12}$$

$$'\ \frac{M2\ (L)^2}{8}\ \&\ \frac{(M2\ \&\ M1)\ (L\ \&\ 2a)\ (L/2\ \&\ a)}{12}$$

$$'\ \frac{M2\ (L)^2}{8}\ \&\ \frac{(M2\ \&\ M1)\ (L\ \&\ 2a)\ (L\ \&\ 2a)}{(12)\ (2)}$$

$$'\left(\ \frac{M2\ (L)^2}{8}\ \&\ \frac{(M2\ \&\ M1)\ [\ (L)^2\ \&\ 4aL\ \%\ 4(a)^2\ ]}{24}\ \right)\ (144)$$

```
DELP = [M2 * SpanL**2/8. - (M2 - M1)*(SpanL**2-4*HdPt*SpanL +
4*HdPt**2)/24.]*144./EI
```

By definition, the net camber at beam ages of release, 30 days, 60 days, 120 days and 240 days is reported as:

$CMAX_t$ = CltDELP - C2t *DELB

C1 and C2 are values at time "t" to account for the "aging" modulus of the beam concrete and the creep effect of Florida concrete materials as related to time.

By definition, the values are:

BEAM AGE IN DAYS	Cl	C2
Release	1.35	1.22
30	2.09	2.07
60	2.26	2.27
120	2.43	2.47
240	2.60	2.64

MODULUS OF ELASTICITY

The modulus of elasticity of prestressed reinforcement is assumed to be 28 x 10 psi, but the value may be modified by the designer and input on Card No. 2.

The modulus of elasticity of the concrete for both the topping and the prestressed component are computed by the program to be:

$$E_c \text{ ' } K_c \; x \; 33 \; x \; (W_c)^{\frac{3}{2}} \; x \; (f')c)^{\frac{1}{2}}$$

Where:

Wc = Unit weight of plastic concrete which is assumed to be 8.0 PCF less than the design weight input on Card No. 2. Wc = 142.0 PCF for the normally assumed concrete dead load unit weight of 150 PCF.

f'c = Strength of concrete under consideration, in psi.

Kc = Constant to adjust Ec for the aggregate being utilized.

(Kc = 0.90 for Florida aggregate).

The modulus of elasticity of the concrete at release (ECI) in the calculations for prestress loss is computed by the program in accordance with the formula shown above but without the user's control. In this case the value f'ci is substituted for f'c in the equation.

TENSILE STRESSES

Allowable tensile stresses at release and at service load are computed automatically by the program or may be input by the designer but in either case only function as a comparison value and do not influence the reported results.

Tensile stresses may be defined by any of the following methods and values at release and at service load do not need to be defined in the same manner:

1. As a constant automatically multiplied by the square root of the appropriate concrete strength, the constant being a default value as described in Table I.

2. As an input constant less between -0.01 and -99.99 which is then automatically multiplied by the square root of the appropriate concrete strength.

3. As an input constant between -100.00 and -999.99 which is then retained by the program as the tensile stress in psi.

SHEAR DESIGN (AASHTO 9.20)

Prestressed double-tees only are analyzed for shear; however, stirrups are sized and spaced in accordance with the provisions of AASHTO 9.20 for all double-tees and for composite solid slabs with the exceptions:

1. V_{ci} ' (0.6(√f)c(b)d) % Vd % (V max(M_{cr} / M max)

   Where: Vd = VDL + VN. CDL + VCDL

   Vmax = Vult - Vd

   Md = MDL + MNCDL + MCDL

   Mmax = Mult - Md

The results are normally exact at all inspection points except the center of the span (where shear design is least critical), where the results are closely approximated for typical AASHTO loadings. Special live loads or unusual designs, however, many require an independent verification of the accuracy of the computed values. Stirrup spacings are reported as calculated at the inspection points; except that the spacing calculated and reported separately at 'h/2' from the face of the support is assigned to all inspection points up to that distance. Should the shear force to be resisted by the stirrups exceed the maximum value permitted by AASHTO, the analysis is completed for the designer's use and a warning note to that affect printed out.

2. The width of stem used in computing Vci and Vcw is assumed to be:

   b)' 2.0([B % X((D % T) /12.0]

Solid slabs are not analyzed for shear but, like double-tees, when a topping is field cast to form a composite section, steel ties are sized to comply with AASHTO and the required area per foot reported as stirrups (AS). For double-tees the most critical of the shear analysis and tie requirements is reported.

STRAND TRANSFER, DEVELOPMENT AND EMBEDMENT LENGTHS

(AASHTO 9.20.2.4 and 9.27)

As used in this program, strand embedment length is the sum of the transfer length and the development length which have the following definitions:

1. Transfer length is the distance required to transfer the farce in a strand to the concrete section of the member by bond. The force is assumed vary linearly from the extreme end of the member over this length (see Figure 4). The transfer length is assumed to be:

TRLEN = 5O.O * DST

2. Development length is the additional distance required to develop the full average stress in the strand at ultimate load beyond the effective stress in the strand, after all prestressing and all losses, and is assumed to vary parabolically beyond the end of the transfer length (see Figure 4). The development length is assumed to be:

$$DVLEN = \frac{(FSU - FSE)}{1000.0} DST$$

3. The strand embedment length is then:

$$EMLEN = TRLEN + DVLEN$$

$$= \frac{(FSU - FSE + 50{,}000.0)}{1000.0} DST$$

Effective stresses near the ends of strands (and the component) during service load stages and at ultimate load are prorated along the transfer and embedment lengths, respectively, as described above and shown in Figure 4.

Use of the AASHTO multiplier, 'TDM', on Card No. 2, cc.49-51 (default = 1.00), modifies the strand transfer, development and embedment length by multiplying the results of the above calculations by the multiplier; hence,

$$TRLEN = TRLEN * TDM$$

$$DVLEN = DVLEN * TDM$$

$$EMLEN = EMLEN * TDM$$

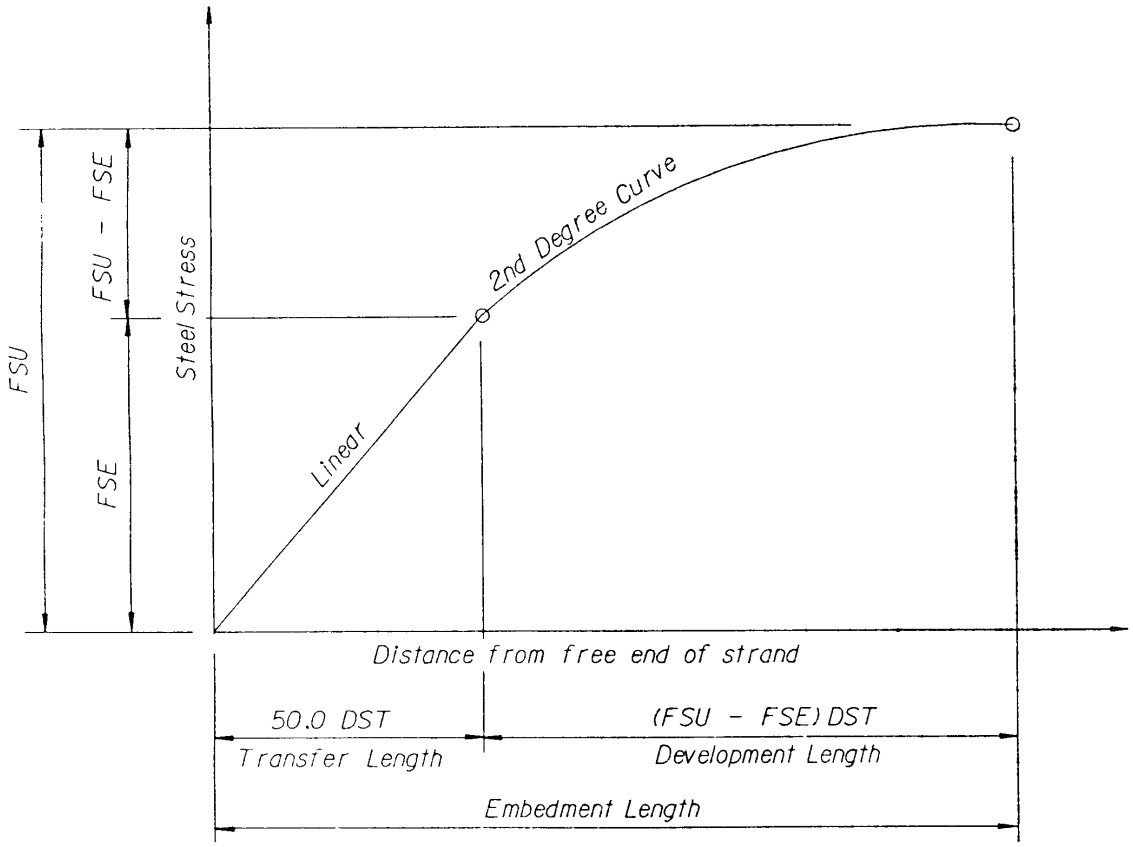

FIGURE 4. VARIATION OF STEEL STRESS WITH

DISTANCE FROM FREE END OF STRAND

USER INSTRUCTIONS

INPUT DATA

This program was designed such that, by default options, the user need only supply a minimal amount of data for it to perform a complete review of a prestressed solid slab or double-tee. The input form contains considerable instructional data so that the designer usually will not have to refer to this document after having become familiar with the program. All input data will be printed out as part of the formal output data. General coding considerations are as follows:

1. Three (3) comment cards <u>must</u> be the first <u>three</u> (3) cards of every run.

2. Card types one (1) thru eight (8), if used, should immediately follow the three (3) comment cards sequentially. Only one (1) series of each card group can be used per run. Any data input on these cards remains in effect for the duration of the job.

3. As many beam cards (blank card type) as desired may be input in a single run. Each card input will generate some type of output.

Additional coding instructions pertaining to each individual card type are as follows:

1. The first three (3) cards or lines on the input forms (each line represents an input card) are (*) or information cards. These cards are used, as coded, on top of each page of output and all <u>three</u> (3) must be coded <u>one time</u>, <u>and one time only</u>, for each run of the program.

2. The next card type is "1". This card is required for every run of the program. Required input data for the type of prestressed component are, in order:

Solid	Double-Tee
SLTT	SLTT
B (or optional W)	B
D	D
W (or optional B)	F
T (if applicable)	W
HOLD- DOWN (if depression points = 2)	T (if applicable)
	X
	HOLD-DOWN (If depression points = 2)

3. Card type "2" is used to input the physical properties of the concrete, reinforcing steel and prestressing steel being used, as well as the strand profile type. Every field on this card has a program default as shown at the bottom of the coding form. Only those fields for which an over-ride is necessary need be coded.

4. The next eight (8) cards are used to describe concentrated loads which can be applied to the component being designed. Card type "3" is used to describe concentrated static loads applied to the non-composite section while card type '4' serves the same purpose for the composite section. Card type "6" is merely a continuation of card type "5" which is used to describe a concentrated live load pattern applied to a composite section which is moved across the span to determine the maximum stress conditions at the inspection points. Whenever a load is input on a load card, it must be accompanied by a corresponding distance on the distance card of the same card type which immediately follows the load card. For static loads, the number of distances required is equal to the number of loads; however, for live loads, the number of distances required is one (1) less than the number of loads. This is illustrated in Figure 5. If there is an inconsistency between the number of loads and the number of distances input, execution of the problem is stopped and an error message is printed out.

5. The next two (2) lines are for card group "7". These cards are required and are used to describe the strand locations at the center of the member between hold-down points (the first "7" card) and at the extreme end of the member (the second "7" card). Up to eighteen (18) rows of strands may be coded on each card. The number of strands in each row is coded in as an integer value in the proper card column location.

6. The next two (2) lines are for card group "8". These cards are required and relate to the previous group "7" cards and are used to describe the strand positions at the center and end of the member. Up to eighteen (18) positions may be coded on each card and the number of positions input must match the number of rows input on the "7" cards. The first position is the vertical dimension of the lowest row of strands, in inches, from the bottom of the member. Successive positions are dimensioned from the previously input position (see Figure 3).

7. The last card type is "b/" and one (1) of these cards is required for each and every program run. As many cards as desired can be used but each card necessarily must be consistent with all the data on the previous cards "1" thru "8". Required data fields are span length, number of members, number of traffic lanes, K-value (or live load distribution factor) and AASHTO live loading type. If the live load distribution factor is not utilized, the distribution is calculated by the program according to AASHTO 3.23.4. If a partial width composite topping is required, its width must be input on this card and its thickness, "T", input on card "1". Either the total strand loss or the loss at release (or both) may be input to override the program computations. If the total loss, only, is input, the release loss is assumed to be 50% of total loss. The designer may input a shear distribution factor for analyzing shears and moments near the end of the member. Unless a value is input, the program uses the live load distribution factor, either computed or input. When used, the shear distribution factor will apply to shear <u>and</u> <u>moment</u> computations at positions within the distance OHT from the support where OHT = D + T.

Complete specifications for all input data are presented in Table III .

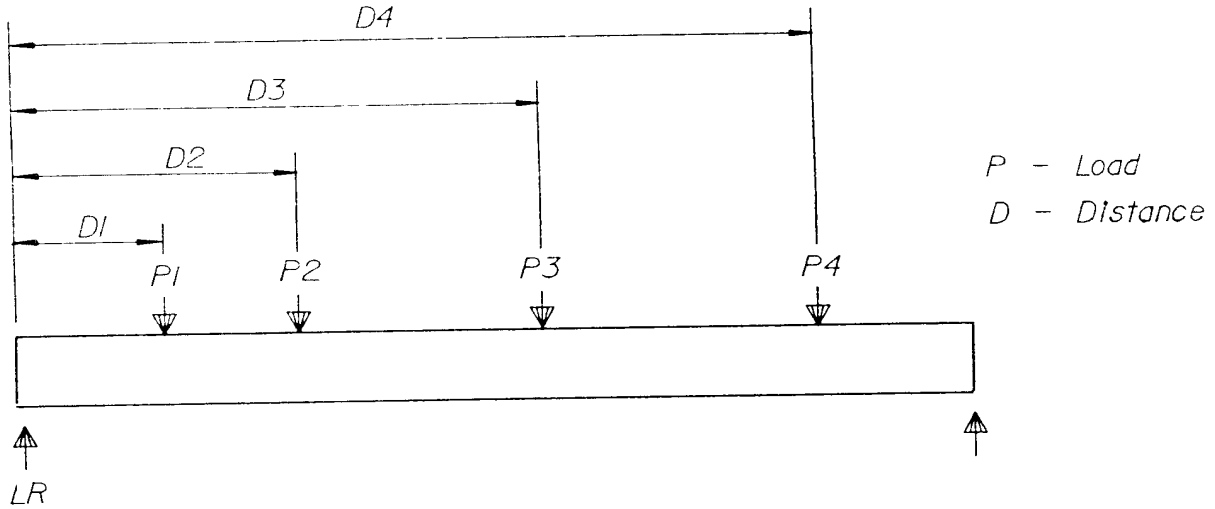

a. Static Loads

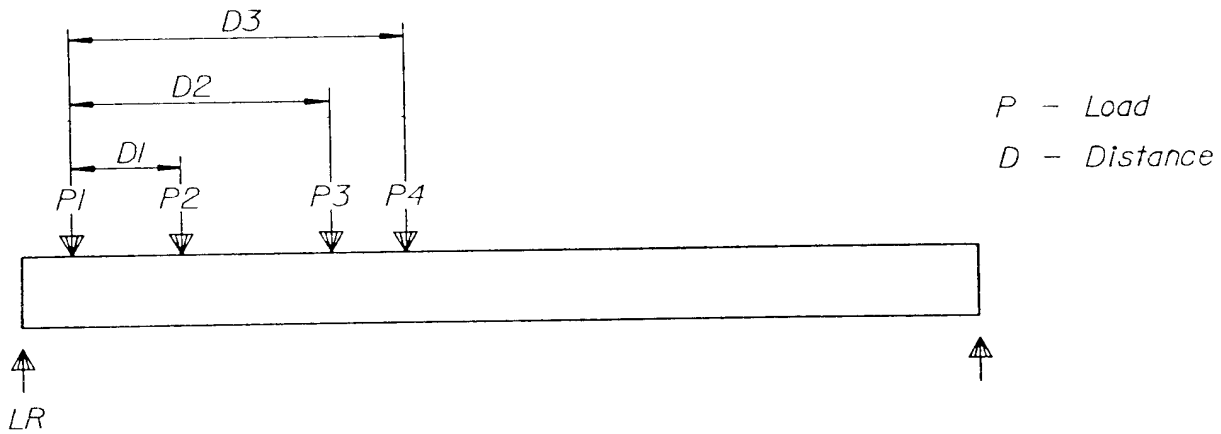

b. Live Loads

FIGURE 5. TYPICAL CONCENTRATED LOADS AND REQUIRED DISTANCES

OUTPUT DATA

The output of this program consists of five (5) pages, displaying the following:

1. All input data and computed section properties.

2. Dead load deflections at midspan and quarter points due-to casting a composite topping.

3. Predicted loss of prestress, both ultimate and at release.

4. Predicted net camber and elastic and time-dependent shortening effects at beam ages of Release, 30, 60, 120 and 240 days.

5. Number, size, pull and eccentricities of prestressing strands.

6. Required concrete strengths (release and 28 days).

7. AASHTO multiplier and resulting strand transfer and development lengths.

8. Arrangement of prestressing strands at centerline and ends of member.

9. Summary table of results compared to requirements.

10. Vertical shears, moments and stresses at twentieth points (up to centerline), at hold-down points (depressed strands), at the strand transfer distance and at H/2 from the face of support.

11. Stirrup spacing, based on AASHTO Specifications, at the inspection points noted above.

12. Maximum ultimate horizontal shear between composite topping and component at the inspection points noted above.

Additionally, various informative messages are output in conjunction with situations which are encountered in the analysis. Some examples of these are:

1. The strand profile type as either "STRAIGHT" or "DEPRESSED".

2. If the analysis was based on stabilized strands.

3. When the maximum reinforcable shear value permitted by AASHTO has been exceeded.

TABLE III

Input Specifications for Simple Span
Prestressed Solid Slabs and Double-Tees

HEADER CARDS AND CARD ONE

CARD NUMBER	CARD COLUMN	VARIABLE NAME	FORMAT	DESCRIPTION	DEFAULT VALUE	NOTES
*	1-80		A80	HEADER CARD - 1 OF 3 , 3 required	NA	Req' d
*	1-80		A80	HEADER CARD - 2 OF 3 , 3 required	NA	Req' d
*	1-80		A80	HEADER CARD - 3 OF 3 , 3 required	NA	Req' d
1	1	ITYPE	I1	CARD HEAD NO. Valid code : 1	NA	Req' d
1	2	BTYPE	I1	TYPE OF COMPONENT Valid code S : Solid Slab T : Double-Tee	NA	Req' d
1	3	ETYPE	I1	ENVIRONMENTAL CLASSIFICATION Valid code S : Slightly Aggressive M : Moderately Aggressive E : Extremely Aggressive Blank : Extremely Aggressive	E	
1	4 - 8	B	F5.3	BOTTOM WIDTH OF SLAB OR DOUBLE - TEE STEM Valid code xx.xxx in.	NA	Req' d (1)
1	9 - 13	D	F5.3	OVERALL DEPTH OF BARE COMPONENT Valid Code xx.xxx in	NA	Req' d
1	14 - 18	F	F5.3	DOUBLE - TEE TOP FLANGE THICKNESS Valid Code xx.xxx in.	NA	Req' d (1)
1	19 - 23	W	F5.3	TOP WIDTH OF COMPONENT Valid Code xx.xxx in.	NA	Req' d (1)
1	24 - 28	T	F5.3	THICKNESS OF COMPOSITE TOPPING Valid Code xx.xxx in.	NA	Req' d (2)

1	29 - 32	X	F4.3	SIDE SLOPE OF DOUBLE - TEE STEM Valid Code x.xxx in. / ft.	NA	Req' d (2)

CARD ONE (CONTINUED)

CARD NUMBER	CARD COLUMN	VARIABLE NAME	FORMAT	DESCRIPTION	DEFAULT VALUE	NOTES
1	33 - 36	UWS	F4.1	UNIT WEIGHT OF TOPPING (Including Reinforcing) Valid Code xxx.x lbs. / cu. Ft.	150.0	
1	37 - 40	UWB	F4.1	UNIT WEIGHT OF PRESTRESSED CONCRETE (Including Reinforcing) Valid Code xxx.x lbs. / cu. Ft.	150.0	
1	41 - 44	HDPT	F4.2	DISTANCE FROM HOLD-DOWN DEVICE TO CENTERLINE OF SPAN Valid Code xx.xx ft.	NA	Req'd (4)
1	45 - 48	ENDIST	F4.2	DISTANCE FROM EXTREME END OF COMPONENT TO CENTERLINE OF BEARING Valid Code xx.xx in.	8.00	

NOTES :

(1) Both "B" and "W" entries are required for double-tees. For solid Slabs only, either entry (or both) may be used but at least one entry is required.

(2) Both "F" and "X" entries are required for double-tees and must be Left blank for solid slabs.

(3) An entry for "T" is required when a composite, field cast concrete Topping is desired. For non-composite toppings, only code in the Weight of such topping as a uniform dead load on the non-composite Section (Last Blank Card, cc. 32-35).

(4) An Entry for "HDPT" is required when the number of depression points on Card No. 2, cc. 9 is "2".

CARD TWO

CARD NUMBER	CARD COLUMN	VARIABLE NAME	FORMAT	DESCRIPTION	DEFAULT VALUE	NOTES
2	1	ITYPE	I1	CARD NO. 2 Valid code : 2	NA	Req' d
2	2 - 5	DIA	A4	STRAND SIZE Valid code 1 / 2 3 / 8 7 / 16 9 / 16 6 / 10 in.	1 / 2	
2	6	SPEC	A1	REGULAR OR SPECIAL Valid code Blank : Regular S : Special	Regular	
2	7 - 8	SRLL	A2	STRAND TYPE Valid code Blank : Stress Relieved SR : Stress Relieved LL : Low Relaxation Strand	Stress Relieved	
2	9	STYPE	I1	NO. OF DEPRESSED POINTS Valid code Blank : Straight Strands 0 : Straight Strands 1 : Single Point Depr. 2 : Double Point Depr.		
2	10 - 12	FPS	F3.0	ULTIMATE STRENGTH OF STRAND Valid code : xx. ksi	270	
2	13 - 14	FPY	F2.0	REINFORCING STEEL GRADE Valid code : xx. ksi	60 .	
2	15 - 18	SFPC	F4.0	TOPPING CONCRETE 28 - DAY STRENGTH Valid code : xxxx. psi	3400	
2	19 - 22	FPC	F4.0	PRESTRESSED CONCRETE 28 - DAY STRENGTH Valid code : xxxx. psi	5000	
2	23 - 26	FPCI	F4.0	PRESTRESSED CONCRETE RELEASE STRENGTH Valid code : xxxx. psi	4000	
2	27 -30	ECSL	F4.2	TOPPING CONCRETE MODULUS OF ELASTICITY Valid code : xx.xx*1000000 psi	N / A	
2	31 - 34	EC	F4.2	PRESTRESSED CONCRETE MODULUS OF ELASTICITY Valid code : xx.xx*1000000 psi	N / A	
2	35 - 38	ES	F4.2	STEEL MODULUS OF ELASTICITY Valid code : xx.xx*1000000 psi	28.00	

CARD TWO (CONTINUED)

CARD NUMBER	CARD COLUMN	VARIABLE NAME	FORMAT	DESCRIPTION	DEFAULT VALUE	NOTES
2	39 - 43	FTP	F5.1	SERVICE LOAD CONCRETE TENSILE STRESS Valid code : -xxx.x psi (- 100.0 to - 999.9) or - xx.x / FPC (- 0 . 1 to - 99.9) Default to - 3/ FPC if ETYPE = BLANK or " E " Default to - 6/ FPC if ETYPE = " S " or " M "	- 3/ FPC or - 6/ FPC	
2	44 - 48	C7	F5.1	INITIAL TENSION AT RELEASE Valid code : - xxxx.x psi (- 100.0 to - 999.9) or - xx.x / FPCI (- 0 . 1 to - 99.9)	- 6/ FPCI	
2	49 - 51	TDM	F3.2	STRAND TRANSFER AND DEVELOPMENT LENGTH MULTIPLIER Valid code : x.xx	1 . 00	

FIRST CARD THREE

CARD NUMBER	CARD COLUMN	VARIABLE NAME	FORMAT	DESCRIPTION	DEFAULT VALUE	NOTES
3	1	ITYPE	I1	CARD NO. 3 Valid code : 3	NA	In Pairs
3	2 - 6	CNCP (1)	F5.2	CONCENTRATED STATIC LOAD APPLIED TO NON-COMPOSITE SECTION Valid code : xxx.xx kips	NA	
3	7 - 11	CNCP (2)	F5.2	CONCENTRATED STATIC LOAD APPLIED TO NON-COMPOSITE SECTION Valid code : xxx.xx kips	NA	
3	12 - 16	CNCP (3)	F5.2	CONCENTRATED STATIC LOAD APPLIED TO NON-COMPOSITE SECTION Valid code : xxx.xx kips	NA	
3	17 - 21	CNCP (4)	F5.2	CONCENTRATED STATIC LOAD APPLIES TO NON-COMPOSITE SECTION Valid code : xxx.xx kips	NA	
3	22 - 26	CNCP (5)	F5.2	CONCENTRATED STATIC LOAD APPLIED TO NON-COMPOSITE SECTION Valid code : xxx.xx kips	NA	
3	27 - 31	CNCP (6)	F5.2	CONCENTRATED STATIC LOAD APPLIED TO NON-COMPOSITE SECTION Valid code : xxx.xx kips	NA	
3	32 - 36	CNCP (7)	F5.2	CONCENTRATED STATIC LOAD APPLIED TO NON-COMPOSITE SECTION Valid code : xxx.xx kips	NA	
3	37 - 41	CNCP (8)	F5.2	CONCENTRATED STATIC LOAD APPLIED TO NON-COMPOSITE SECTION Valid code : xxx.xx kips	NA	
3	42 - 46	CNCP (9)	F5.2	CONCENTRATED STATIC LOAD APPLIED TO NON-COMPOSITE SECTION Valid code : xxx.xx kips	NA	
3	47 - 51	CNCP (10)	F5.2	CONCENTRATED STATIC LOAD APPLIED TO NON-COMPOSITE SECTION Valid code : xxx.xx kips	NA	

SECOND CARD THREE

CARD NUMBER	CARD COLUMN	VARIABLE NAME	FORMAT	DESCRIPTION	DEFAULT VALUE	NOTES
3	1	ITYPE	I1	CARD NO. 3 Valid code : 3	NA	In Pairs
3	2 - 6	CNCP (1)	F5.2	DISTANCE FROM LEFT SUPPORT OF NON-COMPOSITE LOAD Valid code : xxx.xx kips	NA	
3	7 - 11	CNCP (2)	F5.2	DISTANCE FROM LEFT SUPPORT OF NON-COMPOSITE LOAD Valid code : xxx.xx kips	NA	
3	12 - 16	CNCP (3)	F5.2	DISTANCE FROM LEFT SUPPORT OF NON-COMPOSITE LOAD Valid code : xxx.xx kips	NA	
3	17 - 21	CNCP (4)	F5.2	DISTANCE FROM LEFT SUPPORT OF NON-COMPOSITE LOAD Valid code : xxx.xx kips	NA	
3	22 - 26	CNCP (5)	F5.2	DISTANCE FROM LEFT SUPPORT OF NON-COMPOSITE LOAD Valid code : xxx.xx kips	NA	
3	27 - 31	CNCP (6)	F5.2	DISTANCE FROM LEFT SUPPORT OF NON-COMPOSITE LOAD Valid code : xxx.xx kips	NA	
3	32 - 36	CNCP (7)	F5.2	DISTANCE FROM LEFT SUPPORT OF NON-COMPOSITE LOAD Valid code : xxx.xx kips	NA	
3	37 - 41	CNCP (8)	F5.2	DISTANCE FROM LEFT SUPPORT OF NON-COMPOSITE LOAD Valid code : xxx.xx kips	NA	
3	42 - 46	CNCP (9)	F5.2	DISTANCE FROM LEFT SUPPORT OF NON-COMPOSITE LOAD Valid code : xxx.xx kips	NA	
3	47 - 51	CNCP (10)	F5.2	DISTANCE FROM LEFT SUPPORT OF NON-COMPOSITE LOAD Valid code : xxx.xx kips	NA	

FIRST CARD FOUR

CARD NUMBER	CARD COLUMN	VARIABLE NAME	FORMAT	DESCRIPTION	DEFAULT VALUE	NOTES
4	1	ITYPE	I1	CARD NO. 4 Valid code : 4	NA	In Pairs
4	2 - 6	SCNCP (1)	F5.2	CONCENTRATED STATIC LOAD APPLIED TO COMPOSITE SECTION Valid code : xxx.xx kips	NA	
4	7 - 11	SCNCP (2)	F5.2	CONCENTRATED STATIC LOAD APPLIED TO COMPOSITE SECTION Valid code : xxx.xx kips	NA	
4	12 - 16	SCNCP (3)	F5.2	CONCENTRATED STATIC LOAD APPLIED TO COMPOSITE SECTION Valid code : xxx.xx kips	NA	
4	17 - 21	SCNCP (4)	F5.2	CONCENTRATED STATIC LOAD APPLIED TO COMPOSITE SECTION Valid code : xxx.xx kips	NA	
4	22 - 26	SCNCP (5)	F5.2	CONCENTRATED STATIC LOAD APPLIED TO COMPOSITE SECTION Valid code : xxx.xx kips	NA	
4	27 - 31	SCNCP (6)	F5.2	CONCENTRATED STATIC LOAD APPLIED TO COMPOSITE SECTION Valid code : xxx.xx kips	NA	
4	32 - 36	SCNCP (7)	F5.2	CONCENTRATED STATIC LOAD APPLIED TO COMPOSITE SECTION Valid code : xxx.xx kips	NA	
4	37 - 41	SCNCP (8)	F5.2	CONCENTRATED STATIC LOAD APPLIED TO COMPOSITE SECTION Valid code : xxx.xx kips	NA	
4	42 - 46	SCNCP (9)	F5.2	CONCENTRATED STATIC LOAD APPLIED TO COMPOSITE SECTION Valid code : xxx.xx kips	NA	
4	47 - 51	SCNCP (10)	F5.2	CONCENTRATED STATIC LOAD APPLIED TO COMPOSITE SECTION Valid code : xxx.xx kips	NA	

SECOND CARD FOUR

CARD NUMBER	CARD COLUMN	VARIABLE NAME	FORMAT	DESCRIPTION	DEFAULT VALUE	NOTES
4	1	ITYPE	I1	CARD NO. 4 Valid code : 4	NA	In Pairs
4	2 - 6	SCNCD (1)	F5.2	DISTANCE FROM LEFT SUPPORT OF COMPOSITE LOAD Valid code : xxx.xx ft.	NA	
4	7 - 11	SCNCD (2)	F5.2	DISTANCE FROM LEFT SUPPORT OF COMPOSITE LOAD Valid code : xxx.xx ft.	NA	
4	12 - 16	SCNCD (3)	F5.2	DISTANCE FROM LEFT SUPPORT OF COMPOSITE LOAD Valid code : xxx.xx ft.	NA	
4	17 - 21	SCNCD (4)	F5.2	DISTANCE FROM LEFT SUPPORT OF COMPOSITE LOAD Valid code : xxx.xx ft.	NA	
4	22 - 26	SCNCD (5)	F5.2	DISTANCE FROM LEFT SUPPORT OF COMPOSITE LOAD Valid code : xxx.xx ft.	NA	
4	27 - 31	SCNCD (6)	F5.2	DISTANCE FROM LEFT SUPPORT OF COMPOSITE LOAD Valid code : xxx.xx ft.	NA	
4	32 - 36	SCNCD (7)	F5.2	DISTANCE FROM LEFT SUPPORT OF COMPOSITE LOAD Valid code : xxx.xx ft.	NA	
4	37 - 41	SCNCD (8)	F5.2	DISTANCE FROM LEFT SUPPORT OF COMPOSITE LOAD Valid code : xxx.xx ft.	NA	
4	42 - 46	SCNCD (9)	F5.2	DISTANCE FROM LEFT SUPPORT OF COMPOSITE LOAD Valid code : xxx.xx ft.	NA	
4	47 - 51	SCNCD (10)	F5.2	DISTANCE FROM LEFT SUPPORT OF COMPOSITE LOAD Valid code : xxx.xx ft.	NA	

FIRST CARD FIVE

CARD NUMBER	CARD COLUMN	VARIABLE NAME	FORMAT	DESCRIPTION	DEFAULT VALUE	NOTES
5	1	ITYPE	I1	CARD NO. 5 Valid code : 5	NA	In Paris
5	2 - 6	CCP (1)	F5.2	CONCENTRATED LIVE LOAD APPLIED TO COMPOSITE SECTION Valid code : xxx.xx kips	NA	
5	7 - 11	CCP (2)	F5.2	CONCENTRATED LIVE LOAD APPLIED TO COMPOSITE SECTION Valid code : xxx.xx kips	NA	
5	12 - 16	CCP (3)	F5.2	CONCENTRATED LIVE LOAD APPLIED TO COMPOSITE SECTION Valid code : xxx.xx kips	NA	
5	17 - 21	CCP (4)	F5.2	CONCENTRATED LIVE LOAD APPLIED TO COMPOSITE SECTION Valid code : xxx.xx kips	NA	
5	22 - 26	CCP (5)	F5.2	CONCENTRATED LIVE LOAD APPLIED TO COMPOSITE SECTION Valid code : xxx.xx kips	NA	
5	27 - 31	CCP (6)	F5.2	CONCENTRATED LIVE LOAD APPLIED TO COMPOSITE SECTION Valid code : xxx.xx kips	NA	
5	32 - 36	CCP (7)	F5.2	CONCENTRATED LIVE LOAD APPLIED TO COMPOSITE SECTION Valid code : xxx.xx kips	NA	
5	37 - 41	CCP (8)	F5.2	CONCENTRATED LIVE LOAD APPLIED TO COMPOSITE SECTION Valid code : xxx.xx kips	NA	
5	42 - 46	CCP (9)	F5.2	CONCENTRATED LIVE LOAD APPLIED TO COMPOSITE SECTION Valid code : xxx.xx kips	NA	
5	47 - 51	CCP (10)	F5.2	CONCENTRATED LIVE LOAD APPLIED TO COMPOSITE SECTION Valid code : xxx.xx kips	NA	

SECOND CARD FIVE

CARD NUMBER	CARD COLUMN	VARIABLE NAME	FORMAT	DESCRIPTION	DEFAULT VALUE	NOTES
5	1	ITYPE	I1	CARD NO. 5 Valid code : 5	NA	In Pairs
5	2 - 6	CCD (1)	F5.2	DISTANCE FROM LEFT LOAD Valid code : xxx . xx ft	NA	
5	7 - 11	CCD (2)	F5.2	DISTANCE FROM LEFT LOAD Valid code : xxx . xx ft	NA	
5	12 - 16	CCD (3)	F5.2	DISTANCE FROM LEFT LOAD Valid code : xxx . xx ft	NA	
5	17 - 21	CCD (4)	F5.2	DISTANCE FROM LEFT LOAD Valid code : xxx . xx ft	NA	
5	22 - 26	CCD (5)	F5.2	DISTANCE FROM LEFT LOAD Valid code : xxx . xx ft	NA	
5	27 - 31	CCD (6)	F5.2	DISTANCE FROM LEFT LOAD Valid code : xxx . xx ft	NA	
5	32 - 36	CCD (7)	F5.2	DISTANCE FROM LEFT LOAD Valid code : xxx . xx ft	NA	
5	37 - 41	CCD (8)	F5.2	DISTANCE FROM LEFT LOAD Valid code : xxx . xx ft	NA	
5	42 - 46	CCD (9)	F5.2	DISTANCE FROM LEFT LOAD Valid code : xxx . xx ft	NA	
5	47 - 51	CCD (10)	F5.2	DISTANCE FROM LEFT LOAD Valid code : xxx . xx ft	NA	

FIRST CARD SIX

CARD NUMBER	CARD COLUMN	VARIABLE NAME	FORMAT	DESCRIPTION	DEFAULT VALUE	NOTES
6	1	ITYPE	I1	CARD NO. 6 Valid code : 6	NA	In Pairs
6	2 - 6	CCP (11)	F5.2	CONCENTRATED LIVE LOAD APPLIED TO COMPOSITE SECTION Valid code : xxx.xx kips	NA	
6	7 - 11	CCP (12)	F5.2	CONCENTRATED LIVE LOAD APPLIED TO COMPOSITE SECTION Valid code : xxx.xx kips	NA	
6	12 - 16	CCP (13)	F5.2	CONCENTRATED LIVE LOAD APPLIED TO COMPOSITE SECTION Valid code : xxx.xx kips	NA	
6	17 - 21	CCP (14)	F5.2	CONCENTRATED LIVE LOAD APPLIED TO COMPOSITE SECTION Valid code : xxx.xx kips	NA	
6	22 - 26	CCP (15)	F5.2	CONCENTRATED LIVE LOAD APPLIED TO COMPOSITE SECTION Valid code : xxx.xx kips	NA	
6	27 - 31	CCP (16)	F5.2	CONCENTRATED LIVE LOAD APPLIED TO COMPOSITE SECTION Valid code : xxx.xx kips	NA	
6	32 - 36	CCP (17)	F5.2	CONCENTRATED LIVE LOAD APPLIED TO COMPOSITE SECTION Valid code : xxx.xx kips	NA	
6	37 - 41	CCP (18)	F5.2	CONCENTRATED LIVE LOAD APPLIED TO COMPOSITE SECTION Valid code : xxx.xx kips	NA	
6	42 - 46	CCP (19)	F5.2	CONCENTRATED LIVE LOAD APPLIED TO COMPOSITE SECTION Valid code : xxx.xx kips	NA	
6	47 - 51	CCP (20)	F5.2	CONCENTRATED LIVE LOAD APPLIED TO COMPOSITE SECTION Valid code : xxx.xx kips	NA	

SECOND CARD SIX

CARD NUMBER	CARD COLUMN	VARIABLE NAME	FORMAT	DESCRIPTION	DEFAULT VALUE	NOTES
6	1	ITYPE	I1	CARD NO. 6 Valid code : 6	NA	In Pairs
6	2 - 6	CCD (11)	F5.2	DISTANCE FROM LEFT LOAD Valid code : xxx.xx ft.	NA	
6	7 - 11	CCD (12)	F5.2	DISTANCE FROM LEFT LOAD Valid code : xxx.xx ft.	NA	
6	12 - 16	CCD (13)	F5.2	DISTANCE FROM LEFT LOAD Valid code : xxx.xx ft.	NA	
6	17 - 21	CCD (14)	F5.2	DISTANCE FROM LEFT LOAD Valid code : xxx.xx ft.	NA	
6	22 - 26	CCD (15)	F5.2	DISTANCE FROM LEFT LOAD Valid code : xxx.xx ft.	NA	
6	27 - 31	CCD (16)	F5.2	DISTANCE FROM LEFT LOAD Valid code : xxx.xx ft.	NA	
6	32 - 36	CCD (17)	F5.2	DISTANCE FROM LEFT LOAD Valid code : xxx.xx ft.	NA	
6	37 - 41	CCD (18)	F5.2	DISTANCE FROM LEFT LOAD Valid code : xxx.xx ft.	NA	
6	42 - 46	CCD (19)	F5.2	DISTANCE FROM LEFT LOAD Valid code : xxx.xx ft.	NA	
6	47 - 51	CCD (20)	F5.2	DISTANCE FROM LEFT LOAD Valid code : xxx.xx ft.	NA	

FIRST CARD SEVEN

CARD NUMBER	CARD COLUMN	VARIABLE NAME	FORMAT	DESCRIPTION	DEFAULT VALUE	NOTES
7	1	ITYPE	I1	CARD NO. 7 Valid code : 7	NA	In Pairs
7	2 - 3	STROWC (1)	I2	NUMBER OF STRANDS IN ROW 1 AT CENTER Valid code : xx	NA	Req‘ d (1)
7	4 - 5	STROWC (2)	I2	NUMBER OF STRANDS IN ROW 2 AT CENTER Valid code : xx	NA	
7	6 - 7	STROWC (3)	I2	NUMBER OF STRANDS IN ROW 3 AT CENTER Valid code : xx	NA	
7	8 - 9	STROWC (4)	I2	NUMBER OF STRANDS IN ROW 4 AT CENTER Valid code : xx	NA	
7	10 - 11	STROWC (5)	I2	NUMBER OF STRANDS IN ROW 5 AT CENTER Valid code : xx	NA	
7	12 - 13	STROWC (6)	I2	NUMBER OF STRANDS IN ROW 6 AT CENTER Valid code : xx	NA	
7	14 - 15	STROWC (7)	I2	NUMBER OF STRANDS IN ROW 7 AT CENTER Valid code : xx	NA	
7	16 - 17	STROWC (8)	I2	NUMBER OF STRANDS IN ROW 8 AT CENTER Valid code : xx	NA	
7	18 - 19	STROWC (9)	I2	NUMBER OF STRANDS IN ROW 9 AT CENTER Valid code : xx	NA	
7	20 - 21	STROWC (10)	I2	NUMBER OF STRANDS IN ROW 10 AT CENTER Valid code : xx	NA	
7	22 - 23	STROWC (11)	I2	NUMBER OF STRANDS IN ROW 11 AT CENTER Valid code : xx	NA	
7	24 - 25	STROWC (12)	I2	NUMBER OF STRANDS IN ROW 12 AT CENTER Valid code : xx	NA	
7	26 - 27	STROWC (13)	I2	NUMBER OF STRANDS IN ROW 13 AT CENTER Valid code : xx	NA	

FIRST CARD SEVEN (CONTINUED)

CARD NUMBER	CARD COLUMN	VARIABLE NAME	FORMAT	DESCRIPTION	DEFAULT VALUE	NOTES
7	28 - 29	STROWC (14)	I2	NUMBER OF STRANDS IN ROW 14 AT CENTER Valid code : xx	NA	
7	30 - 31	STROWC (15)	I2	NUMBER OF STRANDS IN ROW 15 AT CENTER Valid code : xx	NA	
7	32 - 33	STROWC (16)	I2	NUMBER OF STRANDS IN ROW 16 AT CENTER Valid code : xx	NA	
7	34 - 35	STROWC (17)	I2	NUMBER OF STRANDS IN ROW 17 AT CENTER Valid code : xx	NA	
7	36 - 37	STROWC (18)	I2	NUMBER OF STRANDS IN ROW 18 AT CENTER Valid code : xx	NA	

NOTE:

(1) At least one (1) strand in ROW 1 must be input.

SECOND CARD SEVEN

CARD NUMBER	CARD COLUMN	VARIABLE NAME	FORMAT	DESCRIPTION	DEFAULT VALUE	NOTES
7	1	ITYPE	I1	CARD N0. 7 Valid code : 7	NA	In Pairs
7	2 - 3	STROWE (1)	I2	NUMBER OF STRANDS IN ROW 1 AT END Valid code : xx	NA	Req‘ d (1)
7	4 - 5	STROWE (2)	I2	NUMBER OF STRANDS IN ROW 2 AT END Valid code : xx	NA	
7	6 - 7	STROWE (3)	I2	NUMBER OF STRANDS IN ROW 3 AT END Valid code : xx	NA	
7	8 - 9	STROWE (4)	I2	NUMBER OF STRANDS IN ROW 4 AT END Valid code : xx	NA	
7	10 - 11	STROWE (5)	I2	NUMBER OF STRANDS IN ROW 5 AT END Valid code : xx	NA	
7	12 - 13	STROWE (6)	I2	NUMBER OF STRANDS IN ROW 6 AT END Valid code : xx	NA	
7	14 - 15	STROWE (7)	I2	NUMBER OF STRANDS IN ROW 7 AT END Valid code : xx	NA	
7	16 - 17	STROWE (8)	I2	NUMBER OF STRANDS IN ROW 8 AT END Valid code : xx	NA	
7	18 - 19	STROWE (9)	I2	NUMBER OF STRANDS IN ROW 9 AT END Valid code : xx	NA	
7	20 - 21	STROWE (10)	I2	NUMBER OF STRANDS IN ROW 10 AT END Valid code : xx	NA	
7	22 - 23	STROWE (11)	I2	NUMBER OF STRANDS IN ROW 11 AT END Valid code : xx	NA	
7	24 - 25	STROWE (12)	I2	NUMBER OF STRANDS IN ROW 12 AT END Valid code : xx	NA	

SECOND CARD SEVEN (CONTINUED)

CARD NUMBER	CARD COLUMN	VARIABLE NAME	FORMAT	DESCRIPTION	DEFAULT VALUE	NOTES
7	26 - 27	STROWE (13)	I2	NUMBER OF STRANDS IN ROW 13 AT END Valid code : xx	NA	
7	28 - 29	STROWE (14)	I2	NUMBER OF STRANDS IN ROW 14 AT END Valid code : xx	NA	
7	30 - 31	STROWE (15)	I2	NUMBER OF STRANDS IN ROW 15 AT END Valid code : xx	NA	
7	32 - 33	STROWE (16)	I2	NUMBER OF STRANDS IN ROW 16 AT END Valid code : xx	NA	
7	34 - 35	STROWE (17)	I2	NUMBER OF STRANDS IN ROW 17 AT END Valid code : xx	NA	
7	36 - 37	STROWE (18)	I2	NUMBER OF STRANDS IN ROW 18 AT END Valid code : xx	NA	

NOTES :

(1) At least one (1) strand in ROW 1 must be input.

FIRST CARD EIGHT

CARD NUMBER	CARD COLUMN	VARIABLE NAME	FORMAT	DESCRIPTION	DEFAULT VALUE	NOTES
8	1	ITYPE	I1	CARD N0. 8 Valid code : 8	NA	In Pairs
8	2 - 5	STPOSC (1)	F4.2	DISTANCE FROM BOTTOM OF COMPONENT TO ROW 1 AT CENTER Valid code : xx.xx in.	NA	Req' d
8	6 - 9	STPOSC (2)	F4.2	DISTANCE FROM ROW 1 TO ROW 2 AT CENTER Valid code : xx.xx in.	NA	
8	10 - 13	STPOSC (3)	F4.2	DISTANCE FROM ROW 2 TO ROW 3 AT CENTER Valid code : xx.xx in.	NA	
8	14 - 17	STPOSC (4)	F4.2	DISTANCE FROM ROW 3 TO ROW 4 AT CENTER Valid code : xx.xx in.	NA	
8	18 - 21	STPOSC (5)	F4.2	DISTANCE FROM ROW 4 TO ROW 5 AT CENTER Valid code : xx.xx in.	NA	
8	22 - 25	STPOSC (6)	F4.2	DISTANCE FROM ROW 5 TO ROW 6 AT CENTER Valid code : xx.xx in.	NA	
8	26 - 29	STPOSC (7)	F4.2	DISTANCE FROM ROW 6 TO ROW 7 AT CENTER Valid code : xx.xx in.	NA	
8	30 - 33	STPOSC (8)	F4.2	DISTANCE FROM ROW 7 TO ROW 8 AT CENTER Valid code : xx.xx in.	NA	
8	34 - 37	STPOSC (9)	F4.2	DISTANCE FROM ROW 8 TO ROW 9 AT CENTER Valid code : xx.xx in.	NA	
8	38 - 41	STPOSC (10)	F4.2	DISTANCE FROM ROW 9 TO ROW 10 AT CENTER Valid code : xx.xx in.	NA	
8	42 - 45	STPOSC (11)	F4.2	DISTANCE FROM ROW 10 TO ROW 11 AT CENTER Valid code : xx.xx in.	NA	
8	46 - 49	STPOSC (12)	F4.2	DISTANCE FROM ROW 11 TO ROW 12 AT CENTER Valid code : xx.xx in.	NA	
8	50 - 53	STPOSC (13)	F4.2	DISTANCE FROM ROW 12 TO ROW 13 AT CENTER Valid code : xx.xx in.	NA	
8	54 - 53	STPOSC (14)	F4.2	DISTANCE FROM ROW 13 TO ROW 14 AT CENTER Valid code : xx.xx in.	NA	

FIRST CARD EIGHT (CONTINUED)

CARD NUMBER	CARD COLUMN	VARIABLE NAME	FORMAT	DESCRIPTION	DEFAULT VALUE	NOTES
8	54 - 57	STOPSC (14)	F4.2	DISTANCE FROM ROW 13 TO ROW 14 AT CENTER Valid code : xx.xx in.	NA	
8	58 - 61	STPOSC (15)	F4.2	DISTANCE FROM ROW 14 TO ROW 15 AT CENTER Valid code : xx.xx in.	NA	
8	62 - 65	STPOSC (16)	F4.2	DISTANCE FROM ROW 15 TO ROW 16 AT CENTER Valid code : xx.xx in.	NA	
8	66 - 69	STPOSC (17)	F4.2	DISTANCE FROM ROW 16 TO ROW 17 AT CENTER Valid code : xx.xx in.	NA	
8	70 - 73	STPOSC (18)	F4.2	DISTANCE FROM ROW 17 TO ROW 18 AT CENTER Valid code : xx.xx in.	NA	

NOTES :

(1) At least the dimension from the bottom of the component to at least one (1) strand in ROW 1 must be input.

SECOND CARD EIGHT

CARD NUMBER	CARD COLUMN	VARIABLE NAME	FORMAT	DESCRIPTION	DEFAULT VALUE	NOTES
8	1	ITYPE	I1	CARD NO. 8 Valid code : 8	NA	In Pairs
8	2 - 5	STPOSE (1)	F4.2	DISTANCE FROM BOTTOM OF COMPONENT TO ROW 1 AT END Valid code : xx.xx in.	NA	Req 'd (1)
8	6 - 9	STPOSE (2)	F4.2	DISTANCE FROM ROW 1 TO ROW 2 AT END Valid code : xx.xx in.	NA	
8	10 - 13	STPOSE (3)	F4.2	DISTANCE FROM ROW 2 TO ROW 3 AT END Valid code : xx.xx in.	NA	
8	14 - 17	STPOSE (4)	F4.2	DISTANCE FROM ROW 3 TO ROW 4 AT END Valid code : xx.xx in.	NA	
8	18 - 21	STPOSE (5)	F4.2	DISTANCE FROM ROW 4 TO ROW 5 AT END Valid code : xx.xx in.	NA	
8	22 - 25	STPOSE (6)	F4.2	DISTANCE FROM ROW 5 TO ROW 6 AT END Valid code : xx.xx in.	NA	
8	26 - 29	STPOSE (7)	F4.2	DISTANCE FROM ROW 6 TO ROW 7 AT END Valid code : xx.xx in.	NA	
8	30 - 33	STPOSE (8)	F4.2	DISTANCE FROM ROW 7 TO ROW 8 AT END Valid code : xx.xx in.	NA	
8	34 - 37	STPOSE (9)	F4.2	DISTANCE FROM ROW 8 TO ROW 9 AT END Valid code : xx.xx in.	NA	
8	38 - 41	STPOSE (10)	F4.2	DISTANCE FROM ROW 9 TO ROW 10 AT END Valid code : xx.xx in.	NA	
8	42 - 45	STPOSE (11)	F4.2	DISTANCE FROM ROW 10 TO ROW 11 AT END Valid code : xx.xx in.	NA	
8	46 - 49	STPOSE (12)	F4.2	DISTANCE FROM ROW 11 TO ROW 12 AT END Valid code : xx.xx in.	NA	
8	50 - 53	STPOSE (13)	F4.2	DISTANCE FROM ROW 12 TO ROW 13 AT END Valid code : xx.xx in.	NA	
8	54 - 57	STPOSE (14)	F4.2	DISTANCE FROM ROW 13 TO ROW 14 AT END Valid code : xx.xx in.	NA	

SECOND CARD EIGHT (CONTINUED)

CARD NUMBER	CARD COLUMN	VARIABLE NAME	FORMAT	DESCRIPTION	DEFAULT VALUE	NOTES
8	58 - 61	STPOSE (15)	F4.2	DISTANCE FROM ROW 14 TO ROW 15 AT END Valid code : xx.xx in.	NA	
8	62 - 65	STPOSE (16)	F4.2	DISTANCE FROM ROW 14 TO ROW 15 AT END Valid code : xx.xx in.	NA	
8	66 - 69	STPOSE (17)	F4.2	DISTANCE FROM ROW 14 TO ROW 15 AT END Valid code : xx.xx in.	NA	
8	70 - 73	STPOSE (18)	F4.2	DISTANCE FROM ROW 14 TO ROW 15 AT END Valid code : xx.xx in.	NA	

NOTE :
(1) At least the dimension from the bottom of the component to at least one (1) strand in ROW 1 must be input.

LAST BLANK CARD

CARD NUMBER	CARD COLUMN	VARIABLE NAME	FORMAT	DESCRIPTION	DEFAULT VALUE	NOTES
BLANK	1	ITYPE	BLANK	CARD N0. Valid code : xxx.xx ft.	NA	Req ‘ d
BLANK	2 - 6	SPANL	F5.2	SPAN LENGTH - BETWEEN CENTER LINES OF BEARINGS Valid code : xxx.xx ft.	NA	Req ‘ d
BLANK	7 - 8	NBEAMS	I2	NUMBER OF COMPONENTS IN BRIDGE Valid code : xx	NA	Req ‘ d
BLANK	9 - 10	NLANES	I2	NUMBER OF TRAFFIC LANES Valid code : xx	NA	Req ‘ d
BLANK	11 - 13	BEAMK	F3 . 2	K - VALUE FOR DISTRIBUTION Valid code : x.xx	0 . 7 SLAB 2 . 2 DBL - TEE	Req ‘ d (1)
BLANK	14 - 18	BRDGW	F5.2	OVERALL BRIDGE WIDTH Valid code : xxx.xx ft.	NA	Req ‘ d
BLANK	19 - 23	SMBOL1 SMBOL2	A4 A1	AASHTO LIVE LOAD Valid code H - 15 H - 15 HS - 15 H - 20 H - 20 HS - 20	NA	Req ‘ d
BLANK	24 - 27	DFACT	F4.3	LIVE LOAD DISTRIBUTION FACTOR (PER AXLE) Valid code : x.xxx	NA	OVER - RIDE (1)
BLANK	28 - 31	VFACT	F4.3	SHEAR DISTRIBUTION FACTOR (PER AXLE) Valid code : x.xxx	NA	OVER - RIDE (3)
BLANK	32 - 35	NCDL	F4.3	UNIFORM DEAD LOAD ON NON - COMPOSITE SECTION Valid code : x.xxx kip. / ft.	NA	DON ‘ T INCL. TOP ‘ G
BLANK	36 - 39	CDL	F4.3	UNIFORM DEAD LOAD ON COMPOSITE SECTION Valid code : x.xxx kip. / ft.	NA	
BLANK	40 - 43	EFW	F4.3	WIDTH OF COMPOSITE TOPPING Valid code : x.xxx ft.	NA	(2)
BLANK	44 - 47	PLOSS	F4.2	TOTAL STRAND LOSS Valid code : xx.xx %	NA	OVER - RIDE (4)
BLANK	48 - 51	RLOSS	F4.2	STRAND LOSS AT RELEASE Valid code : xx.xx %	NA	OVER - RIDE (4)

NOTES : (1) A K - value (BEAM) is required input unless a live load distribution factors (DFACT) is used by the designer to override the program ‘ s calculation according to AASHTO 3 . 23 . 4 .

BLANK CARD (CONTINUED

(2) Use this point only when a composite topping is not full width of the component. When used, a corresponding value for "T" , Card N0. 1, cc. 24 - 28, is required.

(3) The shear distribution factor used internally is the same as the Moment distribution factor (DFACT) unless an override value is input. In this event, the input shear factor is used for live load calculations to a distance from the support of the composite member depth.

(4) When a strand total loss value is input, losses at release are assumed to be 50% of the value. A release loss input value overrides this. assumption If neither value is input, losses are calculated according to AASHTO.

SAMPLE 1 - COMPOSITE SOLID SLAB / INTERIOR UNIT

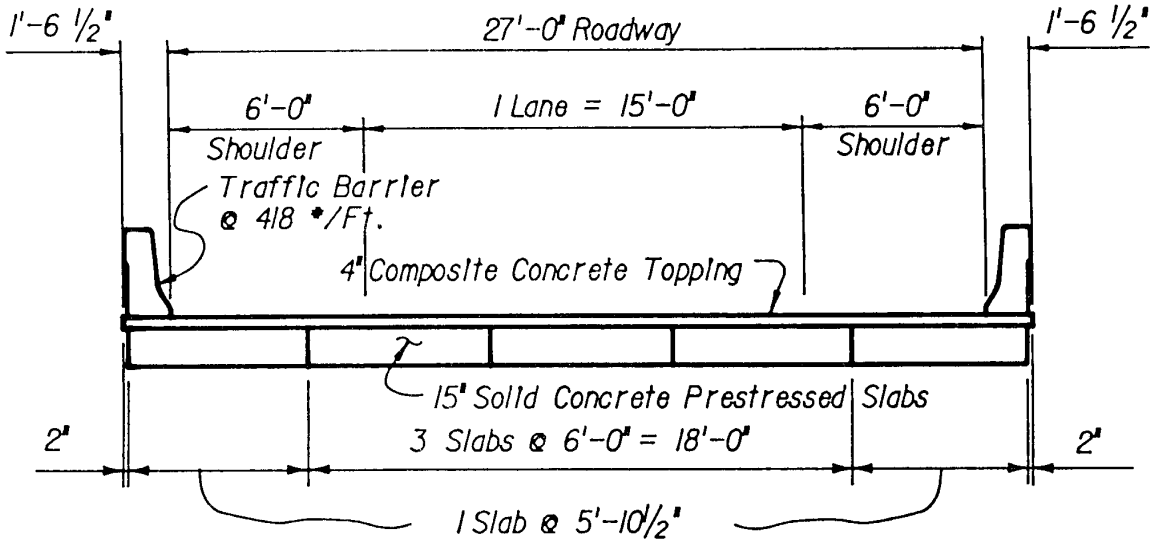

TYPICAL SECTION
(Design Span = 33'-8")

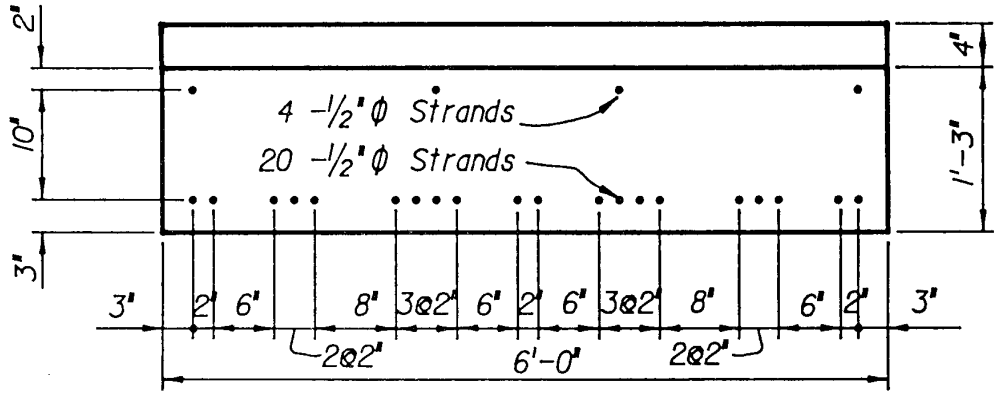

TYPICAL INTERIOR SLAB UNIT

DESIGN CRITERIA:

1. Environment = Slightly Aggressive
2. Hold-Downs = None (Straight Strands)
3. End Distance = 4"
4. Strands =1/2" Dia. 270K, Low-relaxation @ 30,990 lbs. each
5. Reinforcing Steel = Grade 60
6. Topping Concrete (Fc) = 3,400 psi
7. Slab Concrete (fc) = 5,000 psi
8. Release Strength (f'c) = 4.000 psi
9. E (Steel)= 28,000,000 psi
10. Strand Transfer and Development Multiplier = 1.6
11. Live Load = HS-20
12. Composite Dead Load (Barriers)= 418 x 2/5 = 1/5 lbs./ft.

NA70 VERSION 1.0 — THE ANALYSIS OF SIMPLE SPAN PRESTRESSED — SHEET NO. 1 of 1

8 — SOLID SLABS AND DOUBLE-TEES

THIS IS SAMPLE PROBLEM NO. 1

TYPICAL INTERIOR SLAB UNIT WITH A COMPOSITE TOPPING

THREE COMMENT CARDS ARE REQUIRED FOR EVERY RUN

CLASS (TYPE)	D (IN)	D (IN)	F (IN)	W (IN)	T (IN)	X (IN/FT)	Slab Wt. (LB/CU.FT)	Beam Wt. (LB/CU.FT)	Hold-Down (FT)	End Dist. (IN)
72	00	15000			4000					400

% G/D	Seismic	SIZ LL	Dep Pts.	Ult. St. Str. (KSI)	Ult. St. Re. (KSI)	Topping St. (FPCT) (PSI)	Beam St. (FPC) (PSI)	Rel. St. (FPCI) (PSI)	E Topping (KPSI)	E Beam (KPSI)	E Steel (KPSI)	Ctr Tension (-) (PSI)	End Tension (PSI)	Strand Trans. & Dev. Wt.
		44												160

Concentrated Static Load Applied to Non-Comp. Section (Kips)

Distance from Left Support (FT.)

Concentrated Static Load Applied to Composite Section (Kips)

Distance from Left Support (FT.)

Concentrated Live Load (Kips)

Distance from Left Load (FT.)

Concentrated Live Load (Kips) - Continued

Distance from Left Load (FT.) - Continued

Number of Strands in each row at centerline / Number of Strands in each row at end

1	2	3	4	5	6	7	8	9	10	11	12	13	14	15	16	17	18
4	4																

Distance (IN.) from bottom or preceding row at centerline

Distance (IN.) from bottom or preceding row at end

1	2	3	4	5	6	7	8	9	10	11	12	13	14	15	16	17	18
00	1000																
00	1000																

Span Length (FT.)	No. Beams	No. Lanes	E	Bridge Width (FT.)	AASHTO LL	LL Dist. (Per Axle)	Shear Dist (Per Axle)	Non Comp DL (K/FT.)	Comp DL (K/FT.)	Width Comp. Slab (FT.)	Total Strand Loss %	Release Loss
3367	5	2		3008	HS-20				167			

VALUES: CLASS = E

X = 0.75 in/ft.

1/2" 270 K.S.I. Strands

FPCT = 3,400 p.s.i.

FPC = 5,000 p.s.i.

FPCI = 4,000 p.s.i.

150 #/cu.ft. Unit Wt. of Prest. Conc.

150 #/cu.ft. Unit Wt. of Topping Conc.

Debonding Points = 0 (Straight Strands)

Center Tension at Service Load = -6.0 √FPC (CLASS : S)

-6.0 √FPC (CLASS = M)

-3.0 √FPC (CLASS = E)

Live Load Distribution E-Value = 0.7 (Solid Slabs)

= 2.2 (Double-Tees)

```
* This is Sample Problem No. 1 from the Manual
* A typical interior Slab Unit with a composite topping
* Three comment cards are required for every run
1SS7200015000           4000                 400
2     LL                                        160
720 4
720 4
8 3001000
8 3001000
  3367 5 2    3008HS-20             167
```

PRESTRESSED CONCRETE SOLID SLAB ANALYSIS PROGRAM - VERSION 1.1

```
* This is Sample Problem No. 1 from the Manual
* A typical interior Slab Unit with a composite topping
* Three comment cards are required for every run
```

***** REVIEW ONLY ***** REVIEW ONLY ***** REVIEW ONLY ***** REVIEW ONLY ***** REVIEW ONLY ***** REVIEW ONLY *****

SSSSSSSSSSSSSSSSSSSSSSSSSSSSSSSSSSSSSSS S T R A I G H T S T R A N D S SSSSSSSSSSSSSSSSSSSSSSSSSSSSSSSSSSSSSSS

****** L O W - R E L A X A T I O N ******

*** INPUT DATA ***

DESIGN SPAN	=	33.67	FT	UNIT WT. SLAB CONC.	=	150.00	PCF	STRAND SIZE	=	1/2	IN
BRIDGE WIDTH	=	30.08	FT	UNIT WT. TOPPING CONC.	=	150.00	PCF	STRAND ULT. STRENGTH	=	270	KSI
NUMBER OF LANES	=	2		K-VALUE FOR STIFFNESS	=	.70		MAXIMUM COMP. AT RELEASE	=	2400.0	PSI
NUMBER OF BEAMS	=	5		E (SLAB CONCRETE)	=	3.55	E(06)PSI	MAXIMUM TENS. AT RELEASE	=	-379.5	PSI
L.L. DIST. FACTOR	=	.491		E (TOPPING CONCRETE)	=	2.93	E(06)PSI	MAXIMUM COMP. AT 28-DAYS	=	2000.0	PSI
SHEAR DIST. FACTOR	=	.491		E (PRESTRESSING STEEL)	=	28.00	E(06)PSI	MAXIMUM TENS. AT 28-DAYS	=	-424.3	PSI
UNIF. D.L. N-COMP.	=	.000	KLF	TRNSFORMED SLAB WIDTH	=	59.37	IN	MAXIMUM COMP. IN TOPPING	=	1360.0	PSI
UNIF. D.L. COMP.	=	.167	KLF	AASHTO LIVE LOAD	=	HS-20		ENVIRONMENT:		SLIGHTLY AGGRESSIVE	

*** SECTION PROPERTIES ***

		PRECAST	COMPOSITE	
AREA	=	1080.00	1317.49	IN2
WEIGHT	=	1125.00	1425.00	PLF
MOMENT OF INERTIA	=	20250.00	38136.60	IN4
YB BEAM	=	7.50	9.21	IN
SECTION MODULUS BOTTOM	=	2700.00	4139.67	IN3
YT BEAM	=	7.50	5.79	IN
SECTION MODULUS TOP	=	2700.00	6589.44	IN3
YTS TOPPING	=		9.79	IN
SECTION MODULUS TOPPING	=		3896.45	IN3
HEIGHT	=	15.00	19.00	IN

*** SOLID SLAB DIMENSIONS ***

SLAB WIDTH	=	72.000	IN
SLAB DEPTH	=	15.000	IN
COMPOSITE TOPPING WIDTH	=	72.000	IN
COMPOSITE TOPPING DEPTH	=	4.000	IN

*** MEMBER LENGTH DIMENSIONS ***

MEMBER LENGTH (NO SHORTENING EFFECTS) = 34.34 FT END EXTENSION = 4.00 IN HOLD-DOWN (NONE) = .00 FT FROM CENTERLINE

*** CONCENTRATED LOADS APPLIED TO NON-COMPOSITE SECTION ***

LOAD (KIPS)	.00	.00	.00	.00	.00	.00	.00	.00	.00	.00
DIST. FROM LT. REACT. (FT)	.00	.00	.00	.00	.00	.00	.00	.00	.00	.00

*** CONCENTRATED STATIC LOADS APPLIED TO COMPOSITE SECTION ***

LOAD (KIPS)	.00	.00	.00	.00	.00	.00	.00	.00	.00	.00
DIST. FROM LT. REACT. (FT)	.00	.00	.00	.00	.00	.00	.00	.00	.00	.00

*** CONCENTRATED LIVE LOADS APPLIED TO COMPOSITE SECTION ***

LOAD (KIPS)	.00	.00	.00	.00	.00	.00	.00	.00	.00	.00
DIST. FROM LT. LOAD (FT)	.00	.00	.00	.00	.00	.00	.00	.00	.00	.00
LOAD (KIPS)	.00	.00	.00	.00	.00	.00	.00	.00	.00	.00
DIST. FROM LT. LOAD (FT)	.00	.00	.00	.00	.00	.00	.00	.00	.00	

PRESTRESSED CONCRETE SOLID SLAB ANALYSIS PROGRAM - VERSION 1.1

* This is Sample Problem No. 1 from the Manual
* A typical interior Slab Unit with a composite topping
* Three comment cards are required for every run

***** REVIEW ONLY ***** REVIEW ONLY ***** REVIEW ONLY ***** REVIEW ONLY ***** REVIEW ONLY ***** REVIEW ONLY *****

SSSSSSSSSSSSSSSSSSSSSSSSSSSSSSSSSSSSSSSS S T R A I G H T S T R A N D S SSSSSSSSSSSSSSSSSSSSSSSSSSSSSSSSSSSSSSSS

****** L O W - R E L A X A T I O N ******

**** MOMENT SUMMARY (FT-KIPS) ****

SECTION	DIST	SELF WT + TOPPING	NCOMP DL	COMP DL	LL + I	TOTAL
SUPPORT	.00	.000	.000	.000	.000	.000
4IN+H/2	.96	22.336	.000	2.618	30.578	55.531
TRANSFR	3.00	65.557	.000	7.683	87.362	160.602
1/20	1.68	38.368	.000	4.496	52.049	94.913
2/20	3.37	72.697	.000	8.520	96.362	177.579
3/20	5.05	102.987	.000	12.069	132.939	247.995
4/20	6.73	129.238	.000	15.146	162.867	307.251
5/20	8.42	151.451	.000	17.749	186.392	355.592
6/20	10.10	169.625	.000	19.879	203.040	392.544
7/20	11.78	183.761	.000	21.535	213.221	418.517
8/20	13.47	193.857	.000	22.719	223.051	439.627
9/20	15.15	199.915	.000	23.429	227.724	451.068
CENTRLINE	16.83	201.935	.000	23.665	227.239	452.839

**** SHEAR SUMMARY (KIPS) ****

SECTION	SELF WT + TOPPING	NCOMP DL	COMP DL	LL + I	TOTAL
SUPPORT	23.990	.000	2.811	33.220	60.021
4IN+H/2	22.624	.000	2.651	31.912	57.187
TRANSFR	19.715	.000	2.310	29.125	51.150
1/20	21.591	.000	2.530	30.922	55.043
2/20	19.192	.000	2.249	28.624	50.065
3/20	16.793	.000	1.968	26.327	45.088
4/20	14.394	.000	1.687	24.186	40.267
5/20	11.995	.000	1.406	22.143	35.544
6/20	9.596	.000	1.125	20.101	30.822
7/20	7.197	.000	.843	18.093	26.134
8/20	4.798	.000	.562	16.562	21.922
9/20	2.399	.000	.281	15.030	17.710
CENTRLINE	.000	.000	.000	13.498	13.498

**** STRESSES IN EXTREME FIBERS DUE TO EXTERNAL LOADS (LBS PER SQ IN) ****

SECTION	DIST	SELF WT		TOPPING		NCOMP DL		SUB-TOTL		COMP DL		LL + IMPACT		TOTAL	
		TOP	BOT	TOP	BOT	TOP	BOT	TOP	BOT	TOP	BOT	TOP	BOT	TOP	BOT
SUPPORT	.00	0.	0.	0.	0.	0.	0.	0.	0.	0.	0.	0.	0.	0.	0.
4IN+H/2	.96	78.	-78.	21.	-21.	0.	0.	99.	-99.	5.	-8.	56.	-89.	160.	-195.
TRANSFR	3.00	230.	-230.	61.	-61.	0.	0.	291.	-291.	14.	-22.	159.	-253.	464.	-567.
1/20	1.68	135.	-135.	36.	-36.	0.	0.	171.	-171.	8.	-13.	95.	-151.	273.	-334.
2/20	3.37	255.	-255.	68.	-68.	0.	0.	323.	-323.	16.	-25.	175.	-279.	514.	-627.
3/20	5.05	361.	-361.	96.	-96.	0.	0.	458.	-458.	22.	-35.	242.	-385.	722.	-878.
4/20	6.73	453.	-453.	121.	-121.	0.	0.	574.	-574.	28.	-44.	297.	-472.	899.	-1090.
5/20	8.42	531.	-531.	142.	-142.	0.	0.	673.	-673.	32.	-51.	339.	-540.	1045.	-1265.
6/20	10.10	595.	-595.	159.	-159.	0.	0.	754.	-754.	36.	-58.	370.	-589.	1160.	-1400.
7/20	11.78	645.	-645.	172.	-172.	0.	0.	817.	-817.	39.	-62.	388.	-618.	1244.	-1497.
8/20	13.47	680.	-680.	181.	-181.	0.	0.	862.	-862.	41.	-66.	406.	-647.	1309.	-1574.
9/20	15.15	701.	-701.	187.	-187.	0.	0.	889.	-889.	43.	-68.	415.	-660.	1346.	-1617.
CENTRLINE	16.83	709.	-709.	189.	-189.	0.	0.	897.	-897.	43.	-69.	414.	-659.	1354.	-1625.

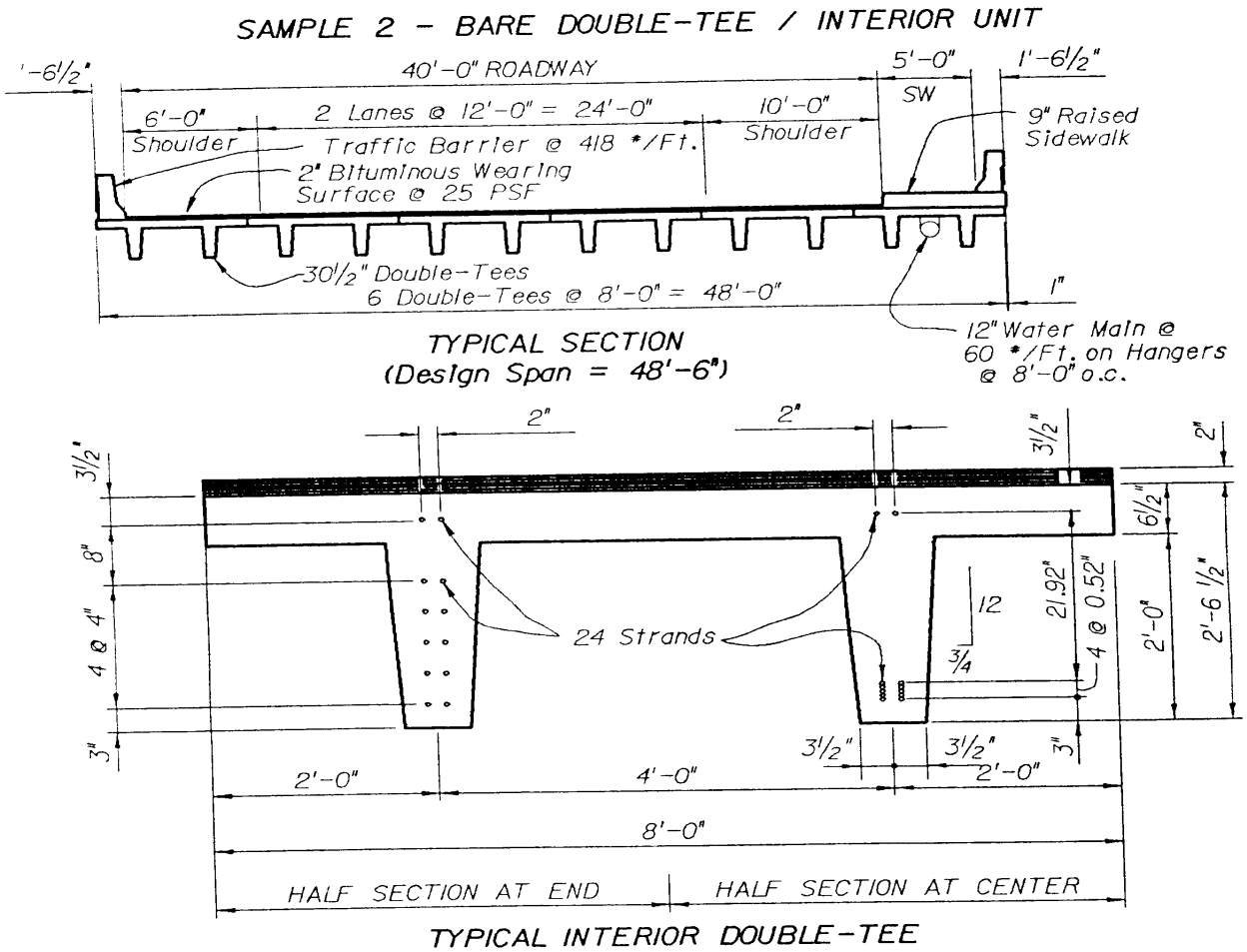

DESIGN CRITERIA:

1. Environment = Extremely Aggressive
2. Hold-Downs = 2 @ 5-O' from centerline
3. End Distance = 5"
4 Strands = ½" Dia.(Special), 270K, Low-relaxation @ 33,820 lbs. each
5. Reinforcing Steel = Grade 60
6. Double-Tee Concrete (fc)= 5,500 psi
7. Release Strength (f'c) = 4,200 psi
8. E (Steel) = 28,500,000 psi
9. Strand Transfer and Development Multiples = 1.6
lO. K-Value (from independent analysis) = 2.05
1l. Shear Distribution at End (from Independent analysis = 0.718
12. Non-Composite Dead load = 25 x 8.0 + 41813 = 339 Ibs./ft.
13. Live Load = HS-20

PSTANA70 VERSION 1.0
9-1-88

THE ANALYSIS OF SIMPLE SPAN PRESTRESSED SOLID SLABS AND DOUBLE-TEES

SHEET NO. 1 of 1

*THIS IS SAMPLE PROBLEM NO. 2
*A TYPICAL INTERIOR DOUBLE-TEE UNIT WITH A BITUMINOUS WEARING SURFACE
*THREE COMMENT CARDS ARE REQUIRED FOR EVERY RUN

Card	Field 1	Field 2	Field 3	Field 4	Field 5	Field 6	Field 7	Field 8	Field 9	Field 10
1	SLTI	CLASS (TYPE)	B (IN)	D (IN)	F (IN)	W (IN)	T (IN)	X (IN/FT)	Slab Wt. (LB/CU FT)	Beam Wt. (LB/CU FT)
	TE		7000	30500	6500	96000				
1	Hold-Down (FT)	End Dist. (IN)								
	500	500								

Card	Field 1	Field 2	Field 3	Field 4	Field 5	Field 6	Field 7	Field 8	Field 9	Field 10
2	3/8 3/16 1/2 9/16 6/10	Strand Diameter	SR LL	Dep Pts.	Ult. St. Str. (KSI)	Ult. St. Re. (KSI)	Topping St. (FPCT) PSI	Beam St. (FPC) PSI	Rel. St. (FPC) PSI	E Topping (MPSI)
	1	5	LL	2				5500	4400	
2	E Beam (MPSI)	E Steel (MPSI)	Ctr Tension (-) (PSI)	End Tension (PSI)	Strand Trans. & Dev. M ft.					
		2850			160					

Card	Field 1	Field 2	Field 3	Field 4	Field 5	Field 6	Field 7	Field 8	Field 9	Field 10
3										
3										

Concentrated Static Load Applied to Non-Comp. Section (Kips)
Distance from Left Support (Ft.)

Card	Field 1	Field 2	Field 3	Field 4	Field 5	Field 6	Field 7	Field 8	Field 9	Field 10
4										
4										

Concentrated Static Load Applied to Composite Section (Kips)
Distance from Left Support (Ft.)

Card	Field 1	Field 2	Field 3	Field 4	Field 5	Field 6	Field 7	Field 8	Field 9	Field 10
5										
5										

Concentrated Live Load (Kips)
Distance from Left Load (Ft.)

Card	Field 1	Field 2	Field 3	Field 4	Field 5	Field 6	Field 7	Field 8	Field 9	Field 10
6										
6										

Concentrated Live Load (Kips) - Continued
Distance from Left Load (Ft.) - Continued

Card	Field 1	Field 2	Field 3	Field 4	Field 5	Field 6	Field 7	Field 8	Field 9	Field 10
7 (ROW)	4	4	4	4	4	4				
7	4	4	4	4	4	4				

Number of Strands in each row at centerline
Number of Strands in each row at end

Card	Field 1	Field 2	Field 3	Field 4	Field 5	Field 6	Field 7	Field 8	Field 9	Field 10
8 (ROW)	300	52	52	52	52	2192				
8	300	400	400	400	400	800				

Distance (In.) from bottom or preceding row at centerline
Distance (In.) from bottom or preceding row at end

Card	Field 1	Field 2	Field 3	Field 4	Field 5	Field 6	Field 7	Field 8	Field 9	Field 10
	Span Length (Ft.)	No. Bikini	No. Lines	E	Bridge Width (Ft.)	AASHTO LL	LL Dist. (Per Axle)	Shear Dist (Per Axle)	Non Comp DL (K/Ft.)	Comp DL (K/Ft.)
	4850	6	3	205	4808	HS-20		718		339

Card	Field 1	Field 2	Field 3	Field 4	Field 5	Field 6	Field 7	Field 8	Field 9	Field 10
	Width Comp. Slab (Ft.)	Total Strand Loss %	Release Loss							

DEFAULT VALUES: CLASS = E
E = 0.75 in./ft.
f'_{pu} = 270 ksi S.R. Strands
Grade of Reinf. = 60 ksi

FPCT = 3,000 p.s.i.
FPC = 5,000 p.s.i.
FPCI = 4,000 p.s.i.
End Dist. = 8.0"

150 #/cu.ft. Unit Wt. of Prest. Conc.
150 #/cu.ft. Unit Wt. of Topping Conc.
Depression Points = 0 (Straight Strands)
E_{ins} = 29 x 10^6 ksi

Center Tension at Service Load = -6.0 VFPC (CLASS = S)
-6.0 VFPC (CLASS = U)
-3.0 VFPC (CLASS = E)
End Tension at Release = -6.0 VFPCI

Live Load Distribution K-Value = 0.7 (Solid Slabs)
= 2.2 (Double-Tees)

```
* This is sample Problem  No. 2 in the Manual
* A typical interior Double -Tee Unit with a Bituminous Wearing Surface
ENGLISH ENGLISH   Three coment cards are required for every run
1TE 700030500 650096000                    500 500
2    SLL2         55004400        2850          160
7 4 4 4 4 4 4
7 4 4 4 4 4 4
8 300  52  52  52  522192
8 300 400 400 400 400 800
  4850 6 3205 4808HS-20     718     339
```

PRESTRESSED CONCRETE DOUBLE-TEE ANALYSIS PROGRAM - VERSION 1.1

```
* This is sample Problem  No. 2 in the Manual
* A typical interior Double -Tee Unit with a Bituminous Wearing Surface
* Three coment cards are required for every run
```

***** REVIEW ONLY ***** REVIEW ONLY ***** REVIEW ONLY ***** REVIEW ONLY ***** REVIEW ONLY ***** REVIEW ONLY *****

DDDDDDDDDDDDDDDDDDDDDDDDDDDDDDDDDDDDDDD D E P R E S S E D S T R A N D S DDDDDDDDDDDDDDDDDDDDDDDDDDDDDDDDDDDDDDD

****** L O W - R E L A X A T I O N ******

*** MATERIALS AND RESULTS ***

```
TYPE OF COMPONENT           = DOUBLE-TEE

NUMBER OF STRANDS           =    24
SIZE AND PULL OF STRANDS    =   1/2 S IN AT 33820 LB
TYPE OF STRANDS             =   270K

ECCENTRICITY AT CENTERLINE  = 13.63 IN
ECCENTRICITY AT CTR OF BRG  =  7.96 IN
ECCENTRICITY AT END         =  7.83 IN

DOUBLE-TEE RELEASE STRENGTH =  4400 PSI
DOUBLE-TEE 28-DAY STRENGTH  =  5500 PSI
TOPPING 28-DAY STRENGTH     =     0 PSI
```

```
D.L. DEFLECTION AT MID-SPAN DUE TO TOPPING  =   .000 IN
D.L. DEFLECTION AT 1/4 POINT DUE TO TOPPING =   .000 IN

PRESTRESS LOSS AT RELEASE  =  8.74 PERCENT
TOTAL PRESTRESS LOSSES     = 22.20 PERCENT
```

AGE OF DOUBLE-TEE CONCRETE	RELEASE	30 DAYS	60 DAYS	120 DAYS	240 DAYS
NET CAMBER (PRESTRESS-TEE) IN	1.32	1.96	2.10	2.25	2.40
BUILD-UP REQD (CAMBER-TOPP) IN	----	.00	.00	.00	.00
ELASTIC AND TIME-DEPENDENT SHORTENING EFFECTS (EST) IN	.15	.23	.25	.27	.29

*** STRAND TRANSFER AND DEVELOPMENT LENGTHS ***

TYPE OF STRAND	AASHTO MULT	TRANSFER LENGTH	DEVELOPMENT LENGTH
FULLY BONDED.....	1.60	3.44 FT	10.51 FT

*** STRAND PATTERN DATA ***

* CENTERLINE OF DOUBLE-TEE *	* END OF DOUBLE-TEE *
ROW 6 AT 27.000 IN FROM BOTTOM HAS 4 STRANDS	ROW 6 AT 27.000 IN FROM BOTTOM HAS 4 STRANDS
ROW 5 AT 5.080 IN FROM BOTTOM HAS 4 STRANDS	ROW 5 AT 19.000 IN FROM BOTTOM HAS 4 STRANDS
ROW 4 AT 4.560 IN FROM BOTTOM HAS 4 STRANDS	ROW 4 AT 15.000 IN FROM BOTTOM HAS 4 STRANDS
ROW 3 AT 4.040 IN FROM BOTTOM HAS 4 STRANDS	ROW 3 AT 11.000 IN FROM BOTTOM HAS 4 STRANDS
ROW 2 AT 3.520 IN FROM BOTTOM HAS 4 STRANDS	ROW 2 AT 7.000 IN FROM BOTTOM HAS 4 STRANDS
ROW 1 AT 3.000 IN FROM BOTTOM HAS 4 STRANDS	ROW 1 AT 3.000 IN FROM BOTTOM HAS 4 STRANDS

PRESTRESSED CONCRETE DOUBLE-TEE ANALYSIS PROGRAM - VERSION 1.1

* This is sample Problem No. 2 in the Manual
* A typical interior Double -Tee Unit with a Bituminous Wearing Surface
* Three coment cards are required for every run

***** REVIEW ONLY ***** REVIEW ONLY ***** REVIEW ONLY ***** REVIEW ONLY ***** REVIEW ONLY ***** REVIEW ONLY *****

DDDDDDDDDDDDDDDDDDDDDDDDDDDDDDDDDDDDDDD D E P R E S S E D S T R A N D S DDDDDDDDDDDDDDDDDDDDDDDDDDDDDDDDDDDDDDD

****** L O W - R E L A X A T I O N ******

***** SUMMARY OF RESULTS OF SPECIFICATION COMPARISON *****

A SURVEY OF THE SLAB OR DBL-TEE ANALYSIS HAS BEEN CONDUCTED TO COMPARE THE REPORTED RESULTS WITH THE DESIGNER'S INPUT OR PROGRAM-DEFAULT SPECIFICATIONS. THE DESIGNER IS CAUTIONED TO VERIFY THAT THE INPUT SPECIFICATIONS ARE PROPER AND IN ACCORDANCE WITH AASHTO AND-OR FDOT ESTABLISHED DESIGN POLICIES PROCEDURES AND REQUIREMENTS. FINAL RESULTS OF THE ANALYSIS ARE REPORTED FOR THE DESIGNER'S REVIEW REGARDLESS OF THE OUTCOME OF THE SPECIFICATION COMPARISON. THE FOLLOWING TABLE OUTLINES THE RESULTS OF THE SPECIFICATION COMPARISON TO ASSIST THE DESIGNER IN HIS REVIEW OF THE ANALYSIS-

DESCRIPTION OF SPECIFICATION COMPARISON	COMPLIES (YES-NO)	SPECIFIED VALUE	ANALYSIS VALUE
1. CRACKING MOMENT (AASHTO ART. 9.18.2).....	YES	1261.7	1666.7
2. ULTIMATE MOMENT (AASHTO ART. 9.17.1 AND 9.18.1).....	YES	1679.6	1847.6
3. MAXIMUM TENSILE STRESS (TOP) AT RELEASE.....	YES	-398.0	-71.3
4. MAXIMUM COMPRESSIVE STRESS (BOTTOM) AT RELEASE.....	YES	2640.0	2602.5
5. MAXIMUM COMPRESSIVE STRESS (TOP) AT SERVICE LOAD.....	YES	2200.0	940.0
6. MAXIMUM TENSILE STRESS (BOTTOM) AT SERVICE LOAD.....	YES	-222.5	-171.8

PRESTRESSED CONCRETE DOUBLE-TEE ANALYSIS PROGRAM - VERSION 1.1

* This is sample Problem No. 2 in the Manual
* A typical interior Double -Tee Unit with a Bituminous Wearing Surface
* Three coment cards are required for every run

***** REVIEW ONLY ***** REVIEW ONLY ***** REVIEW ONLY ***** REVIEW ONLY ***** REVIEW ONLY ***** REVIEW ONLY *****

DDDDDDDDDDDDDDDDDDDDDDDDDDDDDDDDDDDDDDD D E P R E S S E D S T R A N D S DDDDDDDDDDDDDDDDDDDDDDDDDDDDDDDDDDDDDDD

****** L O W - R E L A X A T I O N ******

**** MOMENT SUMMARY (FT-KIPS) ****

SECTION	DIST	SELF WT + TOPPING	NCOMP DL	COMP DL	LL + I	TOTAL
SUPPORT	.00	.000	.000	.000	.000	.000
4IN+H/2	1.60	40.435	.000	12.751	82.737	135.923
TRANSFR	3.02	73.901	.000	23.305	141.886	239.093
1/20	2.42	60.056	.000	18.939	122.339	201.333
2/20	4.85	113.790	.000	35.884	216.109	365.783
3/20	7.27	161.203	.000	50.835	301.256	513.294
4/20	9.70	202.294	.000	63.793	371.132	637.219
5/20	12.13	237.063	.000	74.757	425.737	737.557
6/20	14.55	265.510	.000	83.728	465.070	814.308
7/20	16.98	287.636	.000	90.706	494.030	872.371
8/20	19.40	303.440	.000	95.690	517.514	916.644
9/20	21.82	312.923	.000	98.680	525.727	937.330
CENTRLINE	24.25	316.084	.000	99.677	525.727	941.487
HOLD-DOWN	19.25	302.646	.000	95.439	516.505	914.590

**** SHEAR SUMMARY (KIPS) ****

SECTION	SELF WT + TOPPING	NCOMP DL	COMP DL	LL + I	TOTAL
SUPPORT	26.069	.000	8.221	53.783	88.073
4IN+H/2	24.344	.000	7.677	51.581	83.602
TRANSFR	22.819	.000	7.196	46.935	76.949
1/20	23.462	.000	7.399	50.454	81.314
2/20	20.855	.000	6.577	44.563	71.994
3/20	18.248	.000	5.755	41.414	65.417
4/20	15.641	.000	4.932	38.265	58.839
5/20	13.034	.000	4.110	35.117	52.261
6/20	10.428	.000	3.288	31.968	45.684
7/20	7.821	.000	2.466	28.819	39.106
8/20	5.214	.000	1.644	25.670	32.528
9/20	2.607	.000	.822	22.708	26.137
CENTRLINE	.000	.000	.000	19.910	19.910
HOLD-DOWN	5.375	.000	1.695	25.865	32.935

**** STRESSES IN EXTREME FIBERS DUE TO EXTERNAL LOADS (LBS PER SQ IN) ****

SECTION	DIST	SELF WT		TOPPING		NCOMP DL		SUB-TOTL		COMP DL		LL + IMPACT		TOTAL	
		TOP	BOT	TOP	BOT	TOP	BOT	TOP	BOT	TOP	BOT	TOP	BOT	TOP	BOT
SUPPORT	.00	0.	0.	0.	0.	0.	0.	0.	0.	0.	0.	0.	0.	0.	0.
4IN+H/2	1.60	59.	-141.	0.	0.	0.	0.	59.	-141.	19.	-45.	121.	-289.	199.	-475.
TRANSFR	3.02	108.	-258.	0.	0.	0.	0.	108.	-258.	34.	-82.	208.	-496.	350.	-836.
1/20	2.42	88.	-210.	0.	0.	0.	0.	88.	-210.	28.	-66.	179.	-428.	295.	-704.
2/20	4.85	167.	-398.	0.	0.	0.	0.	167.	-398.	53.	-126.	316.	-756.	536.	-1279.
3/20	7.27	236.	-564.	0.	0.	0.	0.	236.	-564.	74.	-178.	441.	-1054.	752.	-1795.
4/20	9.70	296.	-708.	0.	0.	0.	0.	296.	-708.	93.	-223.	543.	-1298.	933.	-2229.
5/20	12.13	347.	-829.	0.	0.	0.	0.	347.	-829.	109.	-261.	623.	-1489.	1080.	-2580.
6/20	14.55	389.	-929.	0.	0.	0.	0.	389.	-929.	123.	-293.	681.	-1627.	1192.	-2848.
7/20	16.98	421.	-1006.	0.	0.	0.	0.	421.	-1006.	133.	-317.	723.	-1728.	1277.	-3051.
8/20	19.40	444.	-1061.	0.	0.	0.	0.	444.	-1061.	140.	-335.	758.	-1810.	1342.	-3206.
9/20	21.82	458.	-1095.	0.	0.	0.	0.	458.	-1095.	144.	-345.	770.	-1839.	1372.	-3279.
CENTRLINE	24.25	463.	-1106.	0.	0.	0.	0.	463.	-1106.	146.	-349.	770.	-1839.	1378.	-3293.
HOLD-DOWN	19.25	443.	-1059.	0.	0.	0.	0.	443.	-1059.	140.	-334.	756.	-1807.	1339.	-3199.

PRESTRESSED CONCRETE DOUBLE-TEE ANALYSIS PROGRAM - VERSION 1.1

* This is sample Problem No. 2 in the Manual
* A typical interior Double -Tee Unit with a Bituminous Wearing Surface
* Three coment cards are required for every run

***** REVIEW ONLY ***** REVIEW ONLY ***** REVIEW ONLY ***** REVIEW ONLY ***** REVIEW ONLY ***** REVIEW ONLY *****

DDDDDDDDDDDDDDDDDDDDDDDDDDDDDDDDDDDDDDD D E P R E S S E D S T R A N D S DDDDDDDDDDDDDDDDDDDDDDDDDDDDDDDDDDDDDDD

****** L O W - R E L A X A T I O N ******

**** STRESSES DUE TO PRESTRESS AND EXTERNAL LOADS (PSI) ****

SECTION	DIST	INITIAL PRESTRESS (NO LOSSES) TOP	INITIAL PRESTRESS (NO LOSSES) BOT	DOUBLE-TEE PLUS INITIAL PRESTRESS - LOSS AT RELEASE TOP	DOUBLE-TEE PLUS INITIAL PRESTRESS - LOSS AT RELEASE BOT	TOTAL OF ALL LOADS PLUS FINAL PRESTRESS TOP	TOTAL OF ALL LOADS PLUS FINAL PRESTRESS BOT
SUPPORT	.00	0.	323.	0.	295.	0.	251.
4IN+H/2	1.60	-28.	1633.	33.	1349.	177.	795.
TRANSFR	3.02	-90.	2880.	26.	2369.	280.	1404.
1/20	2.42	-60.	2344.	33.	1929.	248.	1120.
2/20	4.85	-143.	3007.	36.	2346.	424.	1060.
3/20	7.27	-214.	3176.	41.	2335.	585.	676.
4/20	9.70	-285.	3345.	36.	2345.	711.	374.
5/20	12.13	-356.	3515.	23.	2378.	803.	155.
6/20	14.55	-426.	3684.	0.	2433.	861.	18.
7/20	16.98	-497.	3853.	-33.	2510.	890.	-54.
8/20	19.40	-564.	4012.	-70.	2600.	904.	-85.
9/20	21.82	-564.	4012.	-56.	2567.	934.	-157.
CENTRLINE	24.25	-564.	4012.	-52.	2555.	940.	-172.
HOLD-DOWN	19.25	-564.	4012.	-71.	2602.	901.	-78.

*** ULTIMATE MOMENT ANALYSIS ***

SECTION	ULTIMATE MOMENT PROVIDED (FT-KIP)	ULTIMATE MOMENT REQUIRED (FT-KIP)	CRACKING MOMENT TIMES 1.2 (FT-KIP)	ULT MOM RATIO	CRK MOM RATIO
SUPPORT	108.	0.	N/A	N/A	N/A
4IN+H/2	526.	248.	N/A	2.117	N/A
TRANSFR	901.	434.	N/A	2.078	N/A
1/20	742.	368.	N/A	2.019	N/A
2/20	1187.	663.	N/A	1.791	N/A
3/20	1461.	928.	N/A	1.573	N/A
4/20	1605.	1150.	N/A	1.395	N/A
5/20	1667.	1328.	1262.	1.255	1.321
6/20	1728.	1462.	1262.	1.182	1.370
7/20	1790.	1562.	1262.	1.146	1.419
8/20	1848.	1640.	1262.	1.126	1.464
9/20	1848.	1674.	1262.	1.104	1.464
CENTRLINE	1848.	1680.	1262.	1.100	1.464
HOLD-DOWN	1848.	1637.	1262.	1.129	1.464

**** SHEAR VALUES AND STIRRUP REQUIREMENTS ****
(AASHTO 1983 SPECS)

SECTION	DIST	VULT	VCI	VCW	VS	AS (FY= 60 KSI)
SUPPORT	.00	161.108	.000	124.357	54.652	.22 SQ IN / FT
4IN+H/2	1.60	153.387	323.269	168.797	1.634	.22 SQ IN / FT
TRANSFR	3.02	140.712	269.885	208.111	-51.764	.22 SQ IN / FT
1/20	2.42	149.436	284.122	191.536	-25.496	.22 SQ IN / FT
2/20	4.85	132.215	178.770	208.111	-31.864	.22 SQ IN / FT
3/20	7.27	120.935	127.468	208.111	6.905	.22 SQ IN / FT
4/20	9.70	109.655	100.911	208.111	20.928	.22 SQ IN / FT
5/20	12.13	98.375	84.230	208.111	25.076	.22 SQ IN / FT
6/20	14.55	87.095	72.461	208.111	24.311	.22 SQ IN / FT
7/20	16.98	75.815	63.164	208.111	21.075	.22 SQ IN / FT
8/20	19.40	64.535	55.033	192.597	16.673	.22 SQ IN / FT
9/20	21.82	53.660	46.957	192.597	4.827	.22 SQ IN / FT
CENTRLINE	24.25	43.138	39.950	192.597	-6.864	.22 SQ IN / FT
HOLD-DOWN	19.25	65.233	55.595	192.597	16.886	.22 SQ IN / FT

**** ULT HORIZ SHEAR (VQ/I) ****
BETWEEN UNIT AND TOPPING

.00 PSI
.00 PSI
.00 PSI
.00 PSI
.00 PSI
.00 PSI
.00 PSI
.00 PSI
.00 PSI
.00 PSI
.00 PSI
.00 PSI
.00 PSI
.00 PSI
.00 PSI
.00 PSI

PROGRAM TERMINATION CAUSED BY: CARD 0, CC 7- 8
* * * NUMBER OF BEAMS IS REQUIRED INPUT * * *

SAMPLE 3 - COMPOSITE DOUBLE-TEE / EXTERIOR UNIT
(NOTE : SAME TYPICAL SECTION AS SAMPLE NO. 2)

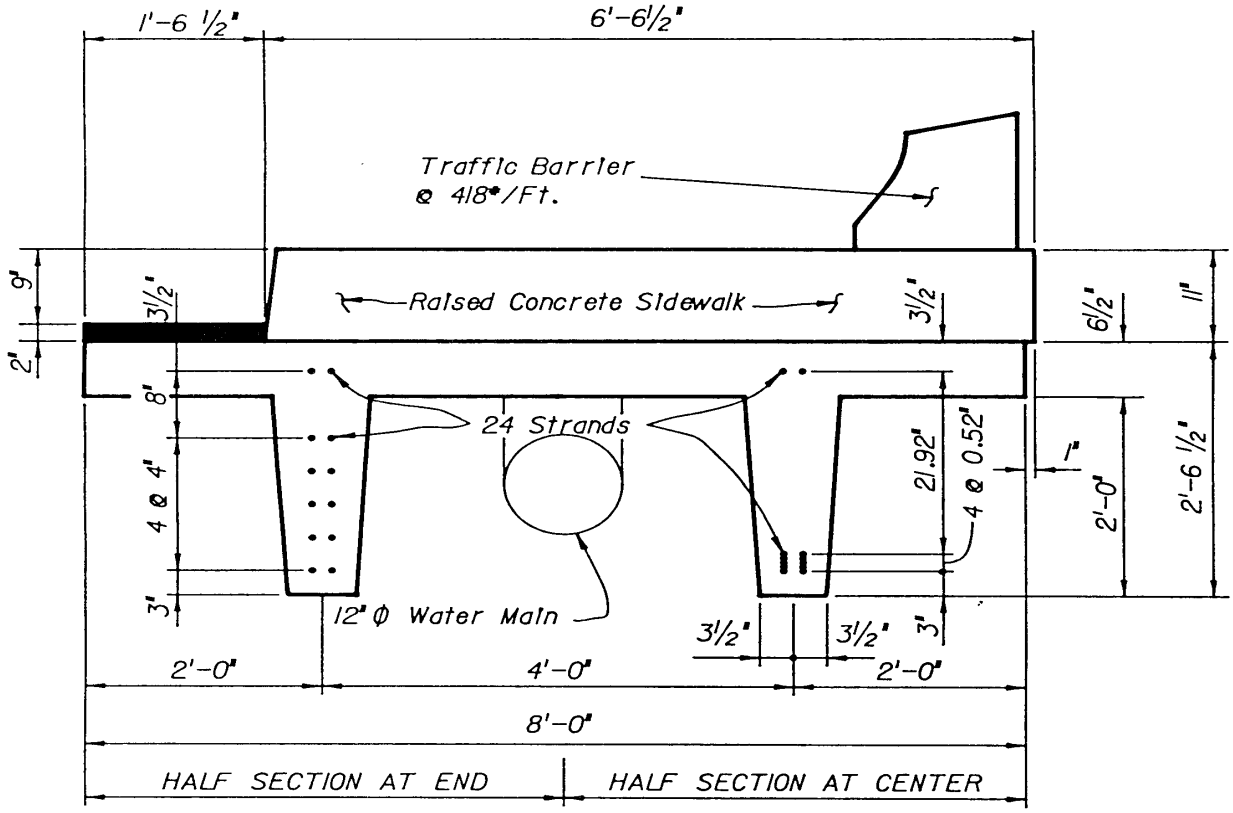

EXTERIOR DOUBLE-TEE WITH SIDEWALK

DESIGN CRITERI

A:

1. Environment = Extremely Aggressive
2. Hold-Downs = 2 @ 5'-0" from Centerline
3. End Distance = 5"
4. Strands -1/2" Dta.(Special). 270K, Low-relaxation @ 33.820 lbs. each
5. Reinforcing Steel = Grade 60
6. Topping Concrete (fc) = 3,400 psi
7. Double = Tee Concrete (fc) = 5.500 psi
8. Release Strength (f'c) = 4.200 psi
9. E (Steel) = 28,500,000 psi
10. Strand Transfer and Development Multiplier = 1.6
11. Live Load Distribution (from independent analysis) = 0.585
12. Shear Distribution at End (from independent analysis) = 0.625
13. Non-Composite Dead Load = 25 x 1.54 =39 lbs./ft.
14. Composite Dead Load = 418 x 0.5 = 209 lbs./ft.(Assumed)
15. Concentrated Composite Dead Load = 60 x 8.0 = 480 lbs. at 8'-O" o.c.
16. Live Load = HS-20

PSTANA70 VERSION 1.0
9-1-88

THE ANALYSIS OF SIMPLE SPAN PRESTRESSED SOLID SLABS AND DOUBLE-TEES

SHEET NO. 1 of 1

```
* THIS IS SAMPLE PROBLEM NO. 3
* AN EXTERIOR DOUBLE-TEE UNIT WITH WEARING SURFACE, SIDEWALK & WATER MAIN
* THREE COMMENT CARDS ARE REQUIRED FOR EVERY RUN
1  TE   7000  30500  6500  96000  11000                  500  500
2  1    S  LL  2                    5500  4400                2850                    160
3
4  48   48   48   48   48   48
   4225 12225 20225 28225 36225 44225
5
6
7  4 4  4 4  4 4  4 4  4 4
   4 4  4 4  4 4  4 4  4 4
8  300  52   52   52   52   2192
   300  400  400  400  400  800
```

Span Length (Ft.) 48.50 | No. Beams 6 | No. Lanes 3 | E | Bridge Width (Ft.) 48.08 | AASHTO LL HS-20 | LL Dist. (Per Axle) 5.85 | Shear Dist (Per Axle) 6.25 | Non Comp DL (K/Ft.) 3.9 | Comp DL (K/Ft.) 2.09 | Width Comp. Slab (Ft.) 6.542 | Total Strand Loss % | Reference Load

DEFAULT VALUES: CLASS = E
X = 0.75 in./ft.
1/2" 270 ksi S.R. Strands
Grade of Reinf. = 60 ksi

f'PC1 = 3,000 p.s.i.
f'PC = 5,000 p.s.i.
f'PC1 = 4,000 p.s.i.
End Dist. = 0.0'

150 #/cu. ft. Unit Wt. of Prest. Conc.
150 #/cu. ft. Unit Wt. of Topping Conc.
Depression Points = 0 (Straight Strands)
E_{STEEL} = 29 x 10^6 ksi

Center Tension at Service Loads = -6.0 $\sqrt{f'PC}$ (CLASS : S)
-6.0 $\sqrt{f'PC}$ (CLASS : U)
-3.0 $\sqrt{f'PC}$ (CLASS : E)
End Tension at Release = -6.0 $\sqrt{f'PC1}$

Live Load Distribution E-Value = 6.7 (Solid Slabs)
= 2.2 (Double-Tees)

Strand Trans. & Dev. Mat. 160

Concentrated Static Load Applied to Non-Comp. Section (Kips)
Distance from Left Support (Ft.)

Concentrated Static Load Applied to Composite Section (Kips)
Distance from Left Support (Ft.)

Concentrated Live Load (Kips)
Distance from Left Load (Ft.)

Concentrated Live Load (Kips) - Continued
Distance from Left Load (Ft.) - Continued

Number of Strands in each row at centerline
Number of Strands in each row at end

Distance (In.) from bottom or preceding row at centerline
Distance (In.) from bottom or preceding row at end

```
*This is sample problem No. 3 in the Manual
*An exterior Double -Tee Unit with wearing surface, sidewalks & water main
ENGLISH ENGLISH Three comment cards are required for every run
1TE 700030500 65009600011000             500 500
2    SLL2         55004400        2850          160
4   48   48   48   48   48   48
4  425 1225 2025 2825 3625 4425
7 4 4 4 4 4 4
7 4 4 4 4 4 4
8 300  52  52  52  522192
8 300 400 400 400 400 800
  4850 6 3    4808HS-20 585 625  39 2096542
```

PRESTRESSED CONCRETE DOUBLE-TEE ANALYSIS PROGRAM - VERSION 1.1

*This is sample problem No. 3 in the Manual
*An exterior Double -Tee Unit with wearing surface, sidewalks & water main
ENGLISH ENGLISH Three comment cards are required for every run

***** REVIEW ONLY ***** REVIEW ONLY ***** REVIEW ONLY ***** REVIEW ONLY ***** REVIEW ONLY ***** REVIEW ONLY *****

DDDDDDDDDDDDDDDDDDDDDDDDDDDDDDDDDDDDDDD D E P R E S S E D S T R A N D S DDDDDDDDDDDDDDDDDDDDDDDDDDDDDDDDDDDDDDD

****** L O W - R E L A X A T I O N ******

*** MATERIALS AND RESULTS ***

TYPE OF COMPONENT = DOUBLE-TEE

NUMBER OF STRANDS = 24
SIZE AND PULL OF STRANDS = 1/2 S IN AT 33820 LB
TYPE OF STRANDS = 270K

ECCENTRICITY AT CENTERLINE = 13.63 IN
ECCENTRICITY AT CTR OF BRG = 7.96 IN
ECCENTRICITY AT END = 7.83 IN

DOUBLE-TEE RELEASE STRENGTH = 4400 PSI
DOUBLE-TEE 28-DAY STRENGTH = 5500 PSI
TOPPING 28-DAY STRENGTH = 3400 PSI

D.L. DEFLECTION AT MID-SPAN DUE TO TOPPING = .498 IN
D.L. DEFLECTION AT 1/4 POINT DUE TO TOPPING = .355 IN

PRESTRESS LOSS AT RELEASE = 8.74 PERCENT
TOTAL PRESTRESS LOSSES = 22.56 PERCENT

AGE OF DOUBLE-TEE CONCRETE	RELEASE	30 DAYS	60 DAYS	120 DAYS	240 DAYS
NET CAMBER (PRESTRESS-TEE) IN	1.32	1.96	2.10	2.25	2.40
BUILD-UP REQD (CAMBER-TOPP) IN	----	1.46	1.60	1.75	1.91
ELASTIC AND TIME-DEPENDENT SHORTENING EFFECTS (EST) IN	.15	.23	.25	.27	.29

*** STRAND TRANSFER AND DEVELOPMENT LENGTHS ***

TYPE OF STRAND	AASHTO MULT	TRANSFER LENGTH	DEVELOPMENT LENGTH
FULLY BONDED.....	1.60	3.44 FT	10.26 FT

*** STRAND PATTERN DATA ***

* CENTERLINE OF DOUBLE-TEE *	* END OF DOUBLE-TEE *
ROW 6 AT 27.000 IN FROM BOTTOM HAS 4 STRANDS	ROW 6 AT 27.000 IN FROM BOTTOM HAS 4 STRANDS
ROW 5 AT 5.080 IN FROM BOTTOM HAS 4 STRANDS	ROW 5 AT 19.000 IN FROM BOTTOM HAS 4 STRANDS
ROW 4 AT 4.560 IN FROM BOTTOM HAS 4 STRANDS	ROW 4 AT 15.000 IN FROM BOTTOM HAS 4 STRANDS
ROW 3 AT 4.040 IN FROM BOTTOM HAS 4 STRANDS	ROW 3 AT 11.000 IN FROM BOTTOM HAS 4 STRANDS
ROW 2 AT 3.520 IN FROM BOTTOM HAS 4 STRANDS	ROW 2 AT 7.000 IN FROM BOTTOM HAS 4 STRANDS
ROW 1 AT 3.000 IN FROM BOTTOM HAS 4 STRANDS	ROW 1 AT 3.000 IN FROM BOTTOM HAS 4 STRANDS

DESCRIPTION OF SUBROUTINES

Subroutine: **ALLOW**

A summary of steps for subroutine **ALLOW** is:

A. Define allowable stresses.

B. Calculate prestressing force before and after losses.

Subroutine: **BLOCK DATA**

Subroutine BLOCK DATA is used to initialize all variables and arrays.

Subroutine: **CAMBER**

A summary of steps for subroutine **CAMBER** is:

A. Calculate the deflection due to prestressing.

B. Calculate the deflection due to the self-weight of the member.

C. Calculate the predicted net camber for five (5) different ages of concrete for the members.

Subroutine: **CONLD**

Subroutine **CONLD** calculates shears and moments at the inspection points due to concentrated live loads, CCP (1). In so doing, the loads are numbered from left to right while the load configuration is moved from right to left. A summary of steps for the subroutine **CONLD** is:

A. Place first load in the configuration at an inspection point.

B. Check the number of the last load to come onto the member. Determine the centroid of the load and the left end reaction.

C. Calculate moment and shear at the inspection point.

D. Place next load at the inspection point. Check the position of the first load to see if it remains on the member.

E. Repeat Steps B, C and D until all loads have been positioned at the inspection point.

F. Repeat the above steps for each inspection point.

G. Determine maximum shears and moments by selecting larger values of the symmetrically located inspection points.

Subroutine: **HELP**

A summary of steps for subroutine **HELP** is:

A. Define location of inspection points at twentieth points, ends of member, H/2 from face of support, strand transfer length and hold-down points.

B. Calculate deflections at quarter-span and midspan due to topping weight.

C. Calculate shears and moments at the inspection points due to topping weight, member weight, and uniform load on the composite and non-composite sections.

D. Call **TYPELD** to determine live load shears and moments.

E. Sum the dead plus live load shears and moments at the inspection points.

Subroutine: **JMLOAD**

Subroutine **JMLOAD** calculates shears and moments at the inspection points due to HS-20 live loading. For a summary of steps, see subroutine **CONLD.**

Subroutine: **LANELD**

A summary of steps for subroutine **LANELD** is:

A. Calculate concentrated and uniformly distributed loads.

B. Calculate shears and moments at inspection points.

C. Select maximum shears and moments by choosing the larger values of the symmetrically located inspection points.

Subroutines: **MAIN, READON, READTW, READTH, REDAFO, READFI, READSI, READSE, READEI AND READBL**

A summary of steps for routine **MAIN** is:

A. Read input data and complete as necessary. (Card types "*" thru 8).

B. Read and edit a member data card (Card type x) for the minimum necessary input. If an error is encountered, print an error message and read another card.

C. Calculate and define all input values not specified.

D. Call **PROPTY.**

E. Call **HELP.**

F. Call **PSTRES**

G. Call **OUTPUT.**

H. Call **ZERO.**

I. Repeat Steps B and G as necessary until all member data cards have been processed.

Subroutine: **MILLER**

A summary of steps for subroutine **MILLER** is:

A. Determine the vertical distance to each row of strands from the bottom of the member at the center and extreme ends of the member.

B. Determine the position of the cgs with reference to the bottom of the member at each inspection point.

Subroutine: **MOMENT**

A. Calculate the required ultimate moment capacity and 1.2 times the cracking moment at each inspection point.

B. Determine whether the neutral axis falls within the topping or in the bare member.

C. If below the topping, determine whether the neutral axis falls below the top flange of double-tee sections.

D. Determine if the reinforcement Index is greater than 0.30.

E. Calculate the resisting moment capacity for the section at each inspection point using the appropriate equation.

Subroutine: **OUTPUT**

A summary of steps for subroutine **OUTPUT** is:

A. Call **DATIME** (or some other user supplied subroutine) to obtain the DATE and TIME.

B. Convert the units for output by defining new variables as determined by the output format.

C. Print out input data and results of computations.

Subroutine: **PROPTY**

A summary of steps for subroutine **PROPTY** is:

A. Define member section properties.

B. Determine the effective topping width.

C. Compute composite section properties.

Subroutine: **PSTRES**

A summary of steps for Subroutine PSTRES is:

A. Establish constants depending on the type of stranding being used, stress relieved or stabilized.

B. Call **ALLOW** to calculate at inspection points.

C. Compute stresses at inspection points.

D. Determine prestress losses.

E. Call **MOMENT.**

F. Call **STANAL.**

G. **Call CAMBER.**

H. Call **SHEAR.**

I. Call **OUTPUT.**

Subroutine: **SHEAR**

A summary of steps for subroutine **SHEAR** is:

A. Apply load factors by 1983 AASHTO to dead and live loads at the inspection points.

B. Define the distances from extreme compressive fiber to centroid of prestressing steel at the inspection points.

C. Define the cosine of the angle between the cgs profile and a horizontal line through the end eccentricity position.

D. Define the vertical component of prestressing force.

E. Calculate the spacing of web reinforcement at the inspection points.

F. Calculate values for design of horizontal shear connections at the inspection points.

G. calculate the distance between the "cgc" and "cgs" at the inspection points.

H. Define the compressive stress in concrete due to prestress only, after all losses, stress due to dead load net flexural cracking moment, and vertical component of prestress at the inspection points.

I. Define at the inspection points the shear that corresponds to the minimum web reinforcement; shear at diagonal cracking due to all loads, when such cracking is the result of combined shear and moment; shear at diagonal cracking due to all loads, when such cracking is the result of excessive principal tension stresses in the web; and the minimum shear at diagonal cracking due to all loads, when such cracking is the result of combined shear and moment.

J. Calculate the spacing of web reinforcement at the inspection points. The spacing at any inspection point preceding (toward the support) H/2 from the face of support is set equal to the spacing at H/2.

Subroutine: **SPCL**

Subroutine **SPCL** calculates shears and moments at the inspection points due to H-20 or H-15 live loading. For a summary of steps, see subroutine **CONLD.**

Subroutine: **STANAL**

A summary of steps for subroutine **STANAL** is:

A. Determine the stresses at each inspection point for each of the following conditions:

a. Initial prestress before any losses.

b. Initial prestress minus loss at release plus the effect of the self-weight of the member.

c. Final prestress plus the effects of all loads.

B. Determine the most critical values to report in the comparison table.

Subroutine: **TYPELD**

A summary of steps for subroutine **TYPELD** is:

A. Calculate the live load impact factor.

B. Call the subroutine(s) to determine live load shears and moments.

C. Apply the impact and appropriate distribution factors.

Subroutine: **ZERO**

Subroutine ZERO zeros out arrays for static dead loads, static live loads, shears, moments, and stranding. This operation is necessary when multiple beams are designed in one (1) execution of the program.

DEFINITIONS

ACI	-	Area of web reinforcement (IN.2/ft.).
ACOMPR	-	Allowable compressive stress at design load after losses (psi) .
AREA	-	Area of the bare component (in.^{2}).
AREAC	-	Total area of the composite section (in.^{2}).
AST	-	Total area of prestressing strands (in.^{2}).
ASTRN	-	Cross-sectional area of one (1) prestressing strand (in.^{2}).
B	-	Width of solid slab or bottom width of one stem of double-tee (in.). See Figure 1.
BEAMK	-	Distribution K-value of member per AASHTO 3.23.4.3.
BMBM	-	Array of values for bending moment at the inspection points due to self-weight of member (in.-lbs.).
BMCDL	-	Array of values for bending moment at the inspection points due to composite dead load (in.-lbs.).
BMDL	-	Array of values for bending moment at the inspection points due to weight of member and topping (in.-lbs.).
BMHS	-	Array of values for bending moments at the inspection points due to HS loading (in.-lbs.).
BMLL	-	Array of values for bending moments at the inspection points due to lane loads (in.-lbs.).
BMM	-	Array of values for bending moments at the inspection points due to concentrated loads on the non-composite section (in.-lbs.).
BMMA	-	Array of values for bending moment at the inspection points due to live load times impact times distribution factor(in.-lbs.).
BMMS	-	Array of values for bending moment at the inspection points due to concentrated loads on the composite section (in.-lbs.).
BMNCDL	-	Array of values for bending moment at the inspection points due to all non-composite loading (in.-lbs.).
BMSL	-	Array of values for bending moment at the inspection points due to weight of topping (in.-lbs.).
MSP	-	of values for bending moments at the inspection points due to H loading (in.-lbs.).
BMSUM	-	Array of values for bending moments at the inspection points due to all loads (in.-lbs).
BRDGW	-	Overall width of bridge (ft.).
BTYPE	-	Component designator (1 = Solid Slab, 2 = Double-Tee).

C1 - C5	-	Constants used to compute prestress losses for stress relieved or stabilized strands.
C6	-	Coefficient for computing "FTP".
C7	-	Coefficient for computing "TTEN".
CCD	-	Array of distances from left reaction to location of "CCP" beginning with "CCD(2)". "CCD(K)" is set to zero internally. See Figure 5.
CCP	-	Array of concentrated live loads applied to the composite section (kips). See Figure 5.
CDL	-	load applied to the composite section.
CGS	-	Array of values of distances at the inspection points from the bottom of the member to the center of gravity of the prestressing strands (in.).
CHRCTR	-	Stored data for comparative purposes used to determine live loading conditions.
CLASS	-	Environmental classification by aggressiveness (S = Slightly, M = Moderately, E = Extremely).
CMAXA-CMAXE	-	Net camber due to prestress and dead load of member (in.) ages A Release, B = 30, C = 60, and D = 120 and E = 240 days.
CNCD	-	Array distances from left reaction to the location of the concentrated loads (ft.).
CNCP	-	Array of concentrated static loads applied to the non-composite section (kips).
CRKMOM	-	moment times 1.2 per AASHTO 9.18.2.1.
CSTLEN		overall casting length of member neglecting allowance for time-dependent shortening (ft.). See Figure 2.
D	-	Depth of bare component. See Figure 1.
DEFK1	-	Deflection at 1/4 span due to topping weight (in.).
DEFK2	-	Deflection at ½ span due to topping weight (in.).
DFACT	-	Live load distribution factor.
DIA	-	Diameter of the prestressing strand (in.). See Table II.
DIA1	-	Stored sizes of prestressing strands. See Table II.
DST	-	Decimal form of diameter of prestressing strand. See Table II.
DVLEN	-	Strand development length for ultimate flexural bond (in.). See Figure 4.
EC	-	Elastic modulus of prestressed concrete (106psi).
ECCL	-	Eccentricity of the strand pattern at the center line of the member measured from the cg. (in.). See Figure 2.

ECSL	-	Elastic modulus of the topping concrete (106psi).
EFD	-	Effective depth of section from the outermost fiber in compression to the center of gravity of the prestressing strands (in.).
EFW	-	Partial width composite topping (ft.). See Figure 1.
EIP	-	Array of values of eccentricities of the strand pattern at the inspection points measured from the cg. (in.).
EMLEN	-	Total strand embedment length (TRLEN + DVLEN) (in.). See Figure 4.
ENCECC	-	Eccentricity of the strand pattern at the end of the member measured from the cg. of the beam (in.). See Figure 2.
ENDIST	-	Distance from end of member to centerline of bearing (in.). See Figure 2.
ES	-	Elastic modulus of prestressing steel (106psi).
ETYPE	-	Integer designation of environmental class (S = 1, M = 2, E = 3 per "CLASS").
F	-	Thickness of top flange of double-tee(in.). See Figure 1.
FBII	-	Temporary allowable stress before losses due to creep and shrinkage (psi).
FBLL	-	Array of stresses at inspection points in bottom fiber of the member due to live load (psi).
FBSL	-	Array of stresses at inspection points in bottom fiber of the member due to topping weight (psi).
FLCK	-	Prestressed reinforcement index per AASHTO 9.18.1.
FD	-	Total initial prestressing force (lbs.).
FPC	-	Minimum 28-day concrete strength of prestressed concrete (psi) .
FPCI	-	Minimum release strength for prestressed concrete (psi).
FPS	-	Ultimate stress for prestressing strand (ksi).
FPY	-	Yield point stress for nonprestressed reinforcement (ksi).
FSE	-	Effective stress in prestressing steel after all losses (psi) .
FSU	-	Average stress in prestressing steel at ultimate load (psi) .
FTBM	-	Stress in the top fiber of member due to the self-weight of member (psi).
FTLL	-	Stress in the top fiber of the member due to the live load(psi) .

FTP	-	Allowable tensile stress at working loads (psi).
FTSL	-	Array of stresses at inspection points in top fiber of the member due to topping weight (psi).
HCPT	-	Distance from the center line of the member to the hold-down point (ft.). See Figure 2.
ICARD	-	Alphanumeric array that contains design data that can later be read using specified format.
INA	-	Composite moment of inertia (in.^{4}).
IPOS	-	for number of strand positions at center of member.
IROW	-	Counter for number of strand locations at center of member.
ITYPE	-	Term used to test for proper format when reading input cards.
JPOS	-	Counter for number of strand positions at end of member.
JROW	-	Counter for number of strand locations at end of member.
LOLAX	-	Code used to denote the use of stabilized strand.
LTYPE	-	Indicator of the type live loading selected.
MCDL	-	Moment due to dead load on the composite section (in.-lbs.).
MCR	-	Cracking moment per AASHTO 9.20.2.2 (in.-lbs.).
MNCDL	-	Moment due to dead load on the non-composite section (in-lbs.).
MNS	-	due to topping and non-composite dead load (in.-lbs.).
NBEAMS	-	Number of longitudinal components (slabs or double-tees).
NCDL	-	Uniformly distributed dead load applied to the composite section (kips/ft.).
NLANES	-	Number of traffic lanes.
NSTATE	-	Indicator that determines which one (1) of four (4) messages will be printed along with the ultimate moments.
OHT	-	Overall height of the section under consideration (in.). See Figure 1.
P	-	Percentage of prestressing steel (AST/EFD * SLW).
PIP	-	Total prestressing force after losses at inspection points(lbs.).
PLOSS	-	Percentage total loss of prestress.
Q	-	Statical moment of cross-sectional area, above or below the level being investigated for shear, taken about the Center of gravity (in.3)

REQULT	-	Required ultimate moment (in.-lbs.).
RLOSS		Percentage loss of prestress at release.
ROW	-	Designates the row number when placing strands.
SAREA1	-	Array of cross-sectional areas for 270K strands. See Table II.
SAREA2	-	Array of cross-sectional areas for 250K strands. See Table II.
SCNCD	-	Array of distances from left reaction to location of "SCNCP" (ft.).
SCNCP	-	Array of concentrated static loads applied to the composite section (kips).
SFPC	-	Compressive strength of topping concrete (psi).
SLTT	-	Component type (S = Solid Slab, T = Double-Tee).
SLW	-	Width of flange used in ultimate moment calculation (in.).
SMAXA-SMAXE	-	Elastic shortening and long-term creep effects of initial prestressing(in.) at ages A = Release, B = 30, C = 60, D= 120 and E = 240 days.
SMBOL1	-	Combination of letters and numbers that designate the type of highway loading.
SMBOL2	-	The last number that completes "SMBOL1".
SMBOL3	-	Letter that designates strand profile.
SPACE	-	Center to center distance between prestressing strands (in.).
SPANL	-	Span length (ft.).
SPEC	-	Designation for special (S) series strands. See Table II.
STPOSC	-	Array of strand positions at center of member. See Figure 3.
STPOSE	-	Array of strand positions at end of member. See Figure 3.
STRNS	-	Number of prestressing strands.
STROWC	-	Array of strand locations at center of member. See Figure 3.
STROWE	-	Array of strand locations at end of members. See Figure 3.
STYPE	-	profile designator (Blank or 0 = straight strands, 1 = one-point depression 2 = two-point depression).
T	-	Topping thickness (in.). See Figure 1.
TOM	-	Factor that can be applied to standard AASHTO strand transfer and development lengths.

TENIN	-	Initial force per strand (lbs.).
TRLEN	-	transfer length = 50 diameters (in.). See figure 4.
TTEN	-	Maximum allowable initial tensile stress (with auxiliary Reinforcement) (psi).
UCR	-	Cracking moment ratio (ULTMOM/CRKMOM).
ULTMOM	-	Ultimate moment provided.
URR	-	Ultimate moment ratio (ULTMOM/REQULT).
UWB	-	Unit weight of prestressed concrete (lbs./ft.^{3}).
UWS	-	Unit weight of topping concrete (lbs./ft.^{3}).
VCDL	-	Array of values for shear at the inspection points due to composite dead loads (lbs.).
VCI	-	Array of values for inclined flexural-shear cracking of prestressed member at inspection points (kips).
VCW	-	Array of values for web-shear cracking of prestressed member at inspection points (kips).
VDL	-	Array of shear values at the inspection points due to self-weight of member.
YFACT	-	Shear distribution factor.
VHS	-	Array of values for shear at the inspection points due to the HS loads (lbs.).
VLL	-	Array of values for shear at the inspection points due to lane loading (lbs.).
VMA	-	Array of stored maximum values of shear at the inspection points due to live load (lbs.).
VMM	-	Array of values for shear at the inspection points due to concentrated loads on the non-composite section (lbs.).
VMMA	-	Array of values for shear at the inspection points due to concentrated loads on the composite section (lbs.).
VNCDL	-	Array of values for shear at the inspection points due to non-composite dead loads (lbs.).
VS	-	Shear at the connections of composite topping and bare member (bond stress).
VSP	-	Array of values for shear at the inspection points due to the H loading (lbs.).
YST	-	Array of values of shear at the inspection points required to be carried by non-prestressed reinforcing (kips).
VSUM	-	Array of values for shear at the inspection points due to all loads.

VULT	-	Array of ultimate shear values due to factored loads at inspection points (kips).
W	-	Width of top of member. See Figure 1.
WECB	-	Unit weight of prestressed concrete only without reinforcing) for computing "EC" (lbs./ft.3).
WECS	-	weight of topping concrete only (without reinforcing) for computing "ESCL" (lbs./ft.).
WORDS	-	that contains the descriptive data on the first three (3) header cards for the problem set.
X	-	Side slope of double-tee stress (in./ft.). See Figure 1.
XDIST	-	Array of distances of inspection points from the left support (ft.).
YB	-	Distance from cgc to bottom of member (in.). See Figure 1.
YBC	-	Distance from the composite cgc to the bottom of the member(in.). See Figure 1.
YT	-	Distance from the beam cg to the top of the member (in.). See Figure 1.
YTC	-	Distance from the composite cgc to the top of the member (in.). See Figure 1.
YTCSL	-	from the composite cgc to the top of the topping (in.). See Figure 1.
ZBB	-	Section modulus for bottom of member (in.^{3}).
ZBBC	-	Composite section modulus for bottom of member (in.^{3}).
ZTB	-	Section modulus for top of member (in.^{3}).
ZTBC	-	Composite section modulus for top of member (in.^{3}).
ZTSL	-	Composite section modulus for top of topping (in.^{3}).