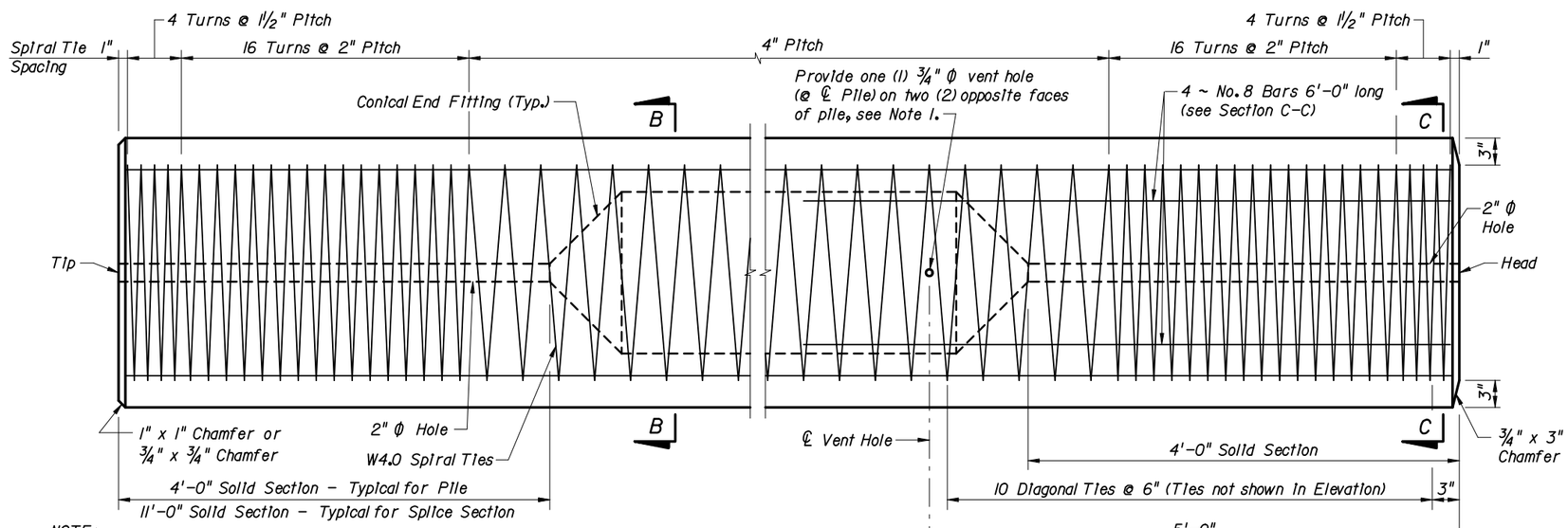

ELEVATION

NOTE:
Work this Index with Index No. 20600 - Notes and Details for Square Prestressed Concrete Piles and Index No. 20601 - Square Prestressed Concrete Pile Splices.

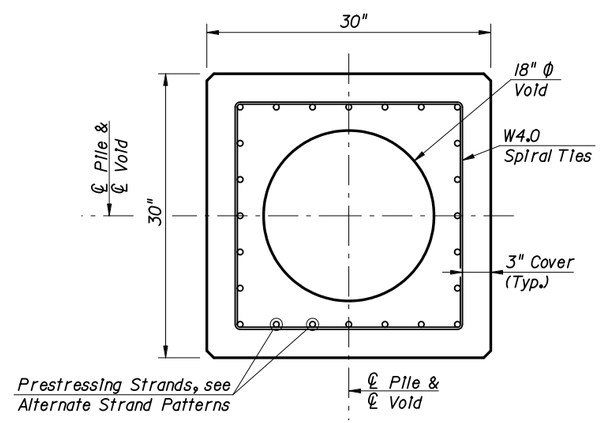

SECTION B-B
(See Pile Splice Reinforcement Details)

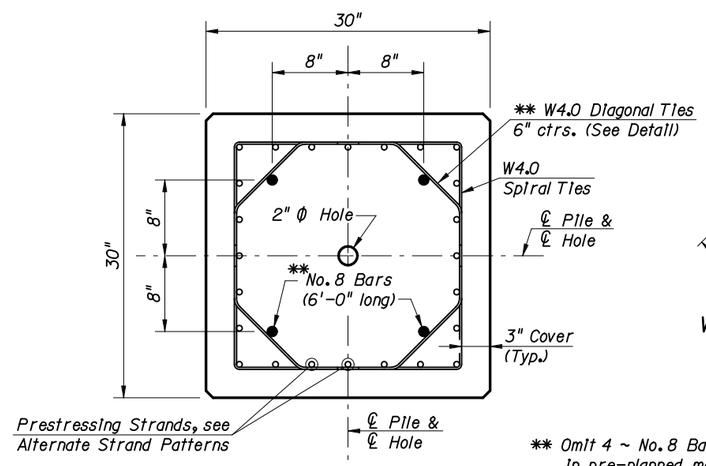

SECTION C-C
(See Pile Splice Reinforcement Details)

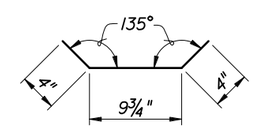

W4.0 DIAGONAL TIE DETAIL

** Omit 4 ~ No. 8 Bars and Diagonal Ties in pre-planned mechanical splice.

ALTERNATE STRAND PATTERNS

20 ~ 9/16" Φ, Grade 270 (Spec) LRS, at 39.7 kips
20 ~ 9/16" Φ, Grade 270 LRS, at 39.0 kips
20 ~ 0.6" Φ, Grade 270 LRS, at 41 kips
24 ~ ½" Φ, Grade 270 (Spec) LRS, at 34.0 kips
24 ~ 9/16" Φ, Grade 270 SR, at 35 kips
24 ~ 9/16" Φ, Grade 270 (Spec) SR, at 35.2 kips
28 ~ ½" Φ, Grade 270 LRS, at 29.0 kips
28 ~ ½" Φ, Grade 270 (Spec) SR, at 30.2 kips

NOTES:
1. The 18" Φ Void in the pile shall be positively vented to water or air after the final pile installation. If the ¾" Φ vents are included in the pile cut-off section, two (2) new holes, ¾" Φ, shall be drilled on two (2) opposite faces of the pile below the bottom of substructure elevation. If the pile void can not be vented directly to water or air, then venting shall be provided by the use of a 1" Φ PVC conduit through a substructure cap or column. Voids between segments of spliced piles shall be connected by 2" Φ hole(s).
2. Any of the given Alternate Strand Patterns may be utilized. The strands shall be located as follows: Place one strand at each corner and place the remaining strands equally spaced between the corner strands. The total strand pattern shall be concentric with the nominal concrete section of the pile.
3. CONTRACTOR OPTION: The 30" pile may be cast SOLID by omitting the 18" Φ void, the 2" Φ holes and the ¾" Φ vent holes. In this event, the Contractor shall submit calculations for approval and a proposed strand configuration that provide net prestressing after losses equal to 1000 psi.

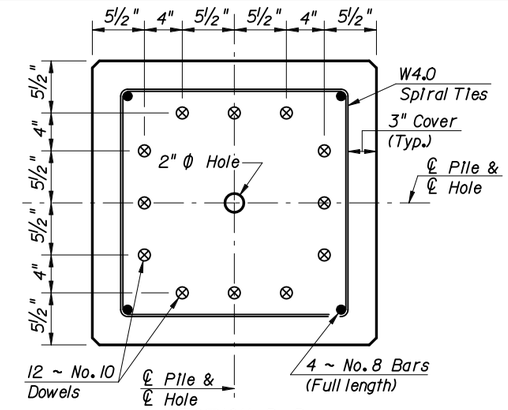

SECTION D-D
(See Non-Drivable Unforeseen Reinforced Precast Pile Splice Detail)

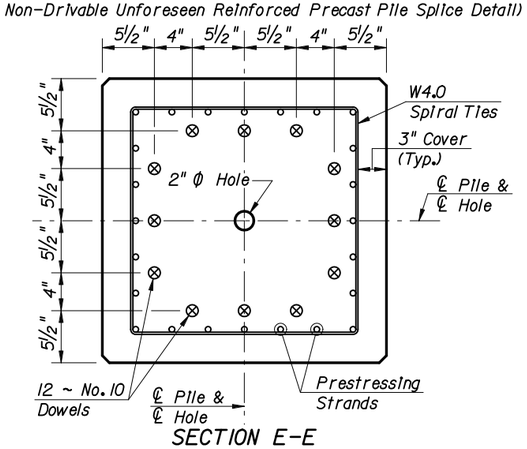

SECTION E-E
(See Drivable Prestressed Precast Pile Splice Detail)

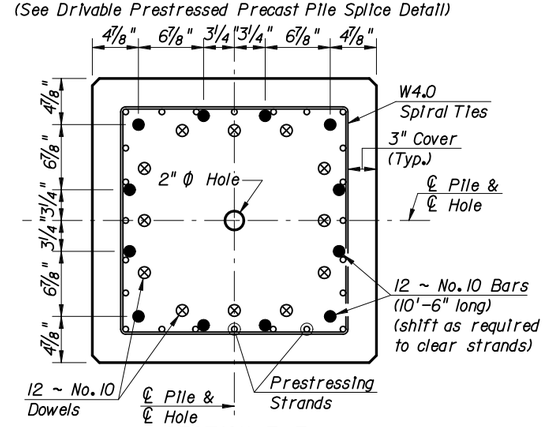

SECTION F-F
(See Drivable Prestressed Precast Pile Splice Detail)

PILE SPLICE REINFORCEMENT DETAILS

REVISIONS					
DATE	BY	DESCRIPTION	DATE	BY	DESCRIPTION
01/01/06	CEB	Added dimension "4'-0" Solid Section - Typical for Pile" & "11'-0" Solid Section - Typical for Splice Section" to ELEVATION.			

STATE OF FLORIDA DEPARTMENT OF TRANSPORTATION

2006 Interim Design Standard

30" SQUARE PRESTRESSED CONCRETE PILE

Interim Date 01/01/06

Sheet No. 1 of 1

Index No. 20630