STATE OF FLORIDA
DEPARTMENT OF TRANSPORTATION

METRIC

ROADWAY AND TRAFFIC DESIGN STANDARDS

FOR DESIGN, CONSTRUCTION, MAINTENANCE AND UTILITY OPERATIONS ON THE STATE HIGHWAY SYSTEM

JANUARY 1995

TOPIC NO. 625-010-003-d

Freddie Simmons

State Roadway Design Engineer

INTRODUCTION

METRIC ROADWAY AND TRAFFIC DESIGN STANDARDS, JANUARY 1995

The 1995 Metric Roadway And Traffic Design Standards booklet was developed in concert with the development of the Departments "Roadway Plans Preparation Manual" ,"Metric" , 1995; the draft packages of proposed metric specifications for the 1996 "FDOT Standard Specifications For Road And Bridge Construction"; the FDOT "Draft Metric Edition of the Basis Of Estimate Handbook, July 1994"; the "FDOT Metric Practice, 9/94" (formerly "DOT Incipient Metric Policy"); and, in reference to the AASHTO "Interim Selected Metric Values For Geometric Design, 1993" and "Addendum 1993"; the AASHTO metric "A Policy On Geometric Design Of Highways And Streets, 1994" (Draft); the AASHTO "Roadside Design Guide" (Draft, 7/94); the USDOT (FHWA) "Manual On Uniform Traffic Control Devices, 1988" and revisions; the USDOT rules implementing the Americans With Disabilities Act (ADA) and its proposed amendments to the rules, June 20, 1994; the "Florida Accessibility Code For Building Construction" (1/94 Edition); and, with express reference to ASTM E621 "Standard Practice for the Use of Metric (SI) Units in Building Design and Construction"; ASTM E380 "Standard Practice For Use Of The International System Of Units (SI) (the Modernized Metric System)"; ASTM and AASHTO specifications with assigned metric designations; and, obtainable industry established interim and proposed metric specifications and trade indentifications.

The Department has adopted a standard practice for use of the m and mm designations and the use of the decimal that applies to the standards of this booklet, metric contract plans and other metric documents. That practice along with applied symbology are as follows:

(a) Meter shall be indicated in decimal form without the m designation unless needed for clarity; for example: 30.0, 0.1 and 4.53.

(b) Millimeter shall be a whole number without the mm designation unless the designation is needed for clarity. Anytime a fractional millimeter is required, the decimal form shall be labeled with mm; for example: 0.0400 mm. Whenever the whole number may be misinterpreted for the number of items required, then the mm designation is to be added; for example: 10 mm joints or 150 mm spaces.

(c) Designations m or mm are not applied to dimensional information on dimension lines with line terminators unless needed for clarity. Designations m or mm are applied to dimensional information when tagged directly to a drawing feature by a leader line.

(d) Designations m or mm are not applied to radii unless needed for clarity; for example: 15.0 R (without the m) and 10 R (without the mm).

(e) In notations the m and mm designation are not to be used when the terms depth, thick, length, width, slopes, ctrs., height, slot, corrugation, timber and similar terms follow the number unless needed for clarity.

(f) All general and design notes and other notation should show the m and mm after any numbers for clarification.

(g) For round holes, diameter may be specified in one of the following forms:

Example: 15 mm Ø Hole (Preferable);
15 Ø Hole or 15 Dia. Hole (Acceptable)

15 mm Ø Hole (2 Reqd.) (Preferable);
2-15 mm Ø Holes (Acceptable)

15.3 mm Ø Hole (mm required with fractional mm)

(h) Designations m or mm are not applied to established trade sizes or identifiers unless indicated by the trade or where needed for clarity; for example: L127 x 89 x 7.9 for a steel shape; 15M for steel reinforcing bars, not No. 15 (No. 15M acceptable but not a general practice); and, pipe size 750, since the diameter is understood by the industry to be in millimiters.

(i) All tables should be labeled m and mm in the headings of columns including tabulations for those items where the industry has specified a single designation.

(j) Pay items units are labeled with upper case letters as shown in the 1994 Metric Basis Of Estimates Handbook; and duplicated on Index No. 001.

(k) For drawings and description information use the small superscript; for example: m^2 not m2.

(l) All items shall be described with their specific designations except as outlined above. SI units and symbols (ASTM's E380 and E621) must be adhered to; for example: kPa not KPa.

The 1994 Appropriations Act was signed into law on October 27, 1993. This act forbids the expenditure of Federal Funds for highway signs displaying speed limits, distance or other measurements using the metric system. Therefore, all speeds and all distances will be displayed in English units.

The equations for determining taper lengths, flare lengths and lane transition lengths "L", (for example $L = WS/1.6$ and $L = WS^2/150$) are for metric values. Design speed will be substituted for "S" in the equations unless other assumed values are to be applied. On those standard indexes where the assumed value is the posted speed (English), conversion tables for English to metric speeds have been included on the indexes.

This booklet is the initial publication of metric roadway and traffic design standards by the Department. Users of these standards are encouraged to suggest improvements to the standards. Suggestions should be submitted only after thorough study has been made and supporting background data can be furnished with the suggestion. Suggestions should be submitted to the State Roadway Design Engineer, Florida Department Of Transportation, 605 Suwannee St. MS 32, Tallahassee, FL. 32399-0450. The Department will make changes to the standards by special provisions, or where necessary by interim standards, until the next regular publication of metric standards is implemented.

TABLE OF CONTENTS
ROADWAY AND TRAFFIC DESIGN STANDARDS

ABBREVIATIONS AND SYMBOLS

001 Standard Abbreviations (2 Sheets)
002 Standard Symbols (3 Sheets)

EROSION CONTROL AND WATER QUALITY

100 Temporary Slope Drain And Sod Flume
101 Trash Retainer And Sediment Basin
102 Baled Hay Or Straw Barriers And Silt Fences (3 Sheets)
103 Turbidity Barriers
104 Erosion Control Details For Permanent Construction
105 Shoulder Sodding And Reworking On Existing Facilities

DRAINAGE

199 Geotextile Criteria
200 Structure Bottoms-Type J And P (2 Sheets)
201 Supplementary Details For Manholes And Inlets (6 Sheets)
205 Cover Height (4 Sheets)
209 Curb Inlet And Gutter Inlet Application Guide
210 Curb Inlet Tops-Types 1, 2, 3 And 4
211 Curb Inlet Tops-Types 5 and 6 (2 Sheets)
212 Curb Inlet-Type 7
213 Curb Inlet-Type 8
214 Curb Inlet Top-Type 9
215 Curb Inlet Top-Type 10
217 Median Barrier Inlets Types 1, 2, 3, 4 And 5
218 Barrier Wall Inlet (2 Sheets)
219 Barrier Wall Inlet-Concrete Barrier Wall (Rigid) (C & G) (2 Sheets)
220 Gutter Inlet-Type S
221 Gutter Inlet-Type V
229 Ditch Bottom And Median Inlet Application Guide
230 Ditch Bottom Inlet-Type A
231 Ditch Bottom Inlet-Type B
232 Ditch Bottom Inlets-Types C, D, E And H (4 Sheets)
233 Ditch Bottom Inlets-Types F And G
234 Ditch Bottom Inlet-Type J
235 Ditch Bottom Inlet-Type K
245 Underdrain Inspection Box
249 Pipe End Treatment Application Guide
250 Straight Concrete Endwalls-Single And Multiple Pipe (2 Sheets)
251 Straight Concrete Endwalls-Single And Double 60" Pipe (2 Sheets)
252 Straight Concrete Endwalls-Single And Double 66" Pipe (2 Sheets)
253 Straight Concrete Endwalls-Single And Double 72" Pipe (2 Sheets)
255 Straight Concrete Endwall-Single 84" Pipe
258 Straight Sand-Cement Endwalls
260 U-Type Concrete Endwalls With Grates-15" To 30" Pipe
261 U-Type Concrete Endwalls-Baffles And Grate Optional-15" To 30" Pipe (3 Sheets)

DRAINAGE (CONT.)

264 U-Type Concrete Endwall-Energy Dissipator-30" To 72" Pipe
266 Winged Concrete Endwalls-Single Round Pipe
268 U-Type Sand-Cement Endwalls
270 Flared End Section
272 Cross Drain Mitered End Section (6 Sheets)
273 Side Drain Mitered End Section (6 Sheets)
280 Miscellaneous Drainage Details (4 Sheets)
281 Ditch Pavement And Sodding (2 Sheets)
282 Back Of Sidewalk Drainage
283 Median Opening Flume
284 Concrete Spillways (2 Sheets)
285 French Drain (2 Sheets)
286 Underdrain
287 Edgedrain (3 Sheets)
290 Concrete Box Culvert (5 Sheets)
293 Safety Modifications For Inlets In Box Culverts
295 Safety Modifications For Endwalls

CURBS AND PAVEMENT JOINTS

300 Curb & Curb And Gutter
301 Turn Lanes
302 Traffic Separators
303 Curb Return Profiles
304 Public Sidewalk Curb Ramps (3 Sheets)
305 Concrete Pavement Joints (5 Sheets)
306 Bridge Approach Expansion Joint-Concrete Pavement
310 Concrete Sidewalk

BARRIERS AND FENCES

400 Guardrail (15 Sheets)
401 Guardrail Anchorage And Continuous Barrier For Existing Bridges (9 Sheets)
410 Concrete Barrier Wall (15 Sheets)
415 Precast Concrete Temporary Barrier Wall (2 Sheets)
431 G-R-E-A-T System (6 Sheets)
432 C-A-T System (2 Sheets)
433 Brakemaster (4 Sheets)
437 Hex-Foam Sandwich System (6 Sheets)
438 Dragnet (2 Sheets)
439 Construction Zone G-R-E-A-T (5 Sheets)
450 Fence Location (2 Sheets)
451 Fence-Type A (2 Sheets)
452 Fence-Type B (2 Sheets)
453 Cantilever Slide Gate-Type B Fence
460 Glare Screen-Knitted Polyester
461 Opaque Visual Barrier

TABLE OF CONTENTS
ROADWAY AND TRAFFIC DESIGN STANDARDS

GENERAL

500 Removal Of Organic And Plastic Material (2 Sheets)
505 Embankment Utilization (3 Sheets)
506 Miscellaneous Earthwork Details
510 Superelevation (3 Sheets)
511 Superelevation-Urban Highways And Streets (3 Sheets)
513 Flexible Pavement-Layer Thickness For Structural Courses
514 Optional Base Group And Structural Numbers (2 Sheets)
515 Turnouts (6 Sheets)
516 Turnouts-Resurfacing Projects
517 Temporary Crossover-Construction Details-Rural
518 Rumble Strips (2 Sheets)
520 Aluminum Pipe Handrails, Gravity walls and Steps (2 Sheets)
525 Ramp Terminals (5 Sheets)
526 Roadway Transitions (8 Sheets)
530 Rest Area Equipment (3 Sheets)
532 Mailboxes (3 Sheets)
535 Tractor Crossings
540 Settlement Plate
545 Landscaping-Back Of Guardrail Application
546 Sight Distance At Intersections (2 Sheets)
560 Railroad Crossings (5 Sheets)

TRAFFIC CONTROL THROUGH WORK ZONES

600 General Information For Traffic Control Through Work Zones (10 Sheets)
601 Two-Lane, Two-Way Rural Day Or Night Operations
602 Two-Lane, Two-Way Rural Day Or Night Operations
603 Two-Lane, Two-Way Rural Operations One Daylight Period Or Less
604 Two-Lane, Two-Way Rural Night Operations Or Operations Exceeding One Daylight Period
605 Two-Lane, Two-Way Rural Moving Operations-Daylight Only
606 Moving Operations Rural Two-Lane, Two-Way Daylight Only
607 Two-Lane,Two-Way Rural Short-Time Day Or Night Operations
608 Two-Lane, Two-Way Lane Closure By Signal Control, Day Or Night Operations (4 Sheets)
609 Two-Lane, Two-Way Rural Temporary Detour Day Or Night Operations
610 Multilane, Divided Or Undivided Rural Day Or Night Operations
611 Multilane, Divided Or Undivided Rural Day Or Night Operations
612 Multilane, Divided And Undivided Rural, Operations One Daylight Period Or Less
613 Multilane, Divided And Undivided Rural Night Operations Or Operations Exceeding One Daylight Period (2 Sheets)
614 Multilane Divided Rural Day Or Night Operations (2 Sheets)
615 Multilane Undivided Rural Day Or Night Operations
616 Multilane Divided Rural (2 Sheets)
617 Multilane Divided Rural
620 Two-Lane, Two-Way Urban Day Or Night Operations
621 Two-Lane, Two-Way Urban Day Or Night Operations

TRAFFIC CONTROL THROUGH WORK ZONES (CONT.)

622 Multilane, Two-Way Urban Divided Or Undivided Day Or Night Operations
623 Multilane, Two-Way Urban Divided Or Undivided Day Or Night Operations (2 Sheets)
624 Multilane, Divided With Traversable Median Or Undivided, Urban Day Or Night Operations
625 Multilane One-Way Or Multilane Divided With Non-Traversable Median Urban Day Or Night Operations (2 Sheets)
626 Multilane One-Way Or Multilane Divided With Non-Traversable Median Urban Day Or Night Operations
627 Moving Operations
630 Temporary Crossover For Paving Train Operations Rural (2 Sheets)
640 Converting Two-Lanes To Four-Lanes Divided Rural (2 Sheets)
641 Converting Two-Lanes To Four-Lanes Divided Urban (2 Sheets)
650 Two-Lane, Two-Way Rural Structure Replacement (2 Sheets)
651 Multilane Divided Maintenance And Construction (2 Sheets)
660 Pedestrian Control For Closure Of Sidewalks

DESIGN CRITERIA

700 Design Elements Related To Highway Safety (2 Sheets)

SIGNING AND MARKINGS

9535 Standard Roadside Sign Break-Away Post Details (4 Sheets)
11037 Aluminum & Steel Overhead Sign Structures, (Details Of Sign Faces & Truss Connection)
11860 Single Column Ground Signs (Sign Profile & Identification Numbers) (3 Sheets)
11861 Single Column Ground Signs (100 km/h) (2 Sheets)
11862 Single Column Ground Signs (115 km/h) (2 Sheets)
11863 Single Column Ground Signs (130 km/h) (2 Sheets)
11864 Single Column Ground Signs (145 km/h) (2 Sheets)
11865 Single Column Ground Signs (All Wind Zones) (2 Sheets)
13417 Mounting Exit Numbering Panels To Highway Signs
17302 Typical Sections For Placement Of Single & Multi-Column Signs
17328 Typical Signing For Truck Weigh & Inspection Stations
17344 School Signs & Markings (6 Sheets)
17345 Interchange Markings (4 Sheets)
17346 Special Marking Areas (9 Sheets)
17349 Traffic Controls For Street Terminations
17350 Signing For Motorist Services
17351 Welcome Center Signing (2 Sheets)
17352 Typical Placement Of Reflective Pavement Markers (2 Sheets)
17353 Markings For Attenuation Systems
17355 Special Sign Details (8 Sheets)
17356 Span Wire Mounted Sign Details (2 Sheets)
17357 Bridge Weight Restrictions
17359 Rural Narrow Bridge Treatment

TABLE OF CONTENTS
ROADWAY AND TRAFFIC DESIGN STANDARDS

ROADWAY LIGHTING

17500 Conventional Pole Details
17501 Highway Lighting General Notes
17502 Highmast Lighting Details (3 Sheets)
17503 Roadway Lighting Details
17504 Service Point Details
17505 External Lighting For Signs (Mercury Vapor) (2 Sheets)

TRAFFIC SIGNAL AND EQUIPMENT

17721 Conduit Installation Details (2 Sheets)
17727 Signal Cable And Span Wire Installation Details (2 Sheets)
17733 Aerial Interconnect
17736 Electric Power Service
17764 Pedestrian Control Signal Installation Details
17781 Vehicle Loop Installation Details (2 Sheets)
17784 Pedestrian Detector Assembly Installation Details (2 Sheets)
17841 Cabinet Installation Details
17870 Standard Signal Operating Plans (2 Sheets)
17881 Advance Warning For R/R Crossing
17882 Railroad Grade Crossing Traffic Control Devices (4 Sheets)
17890 Traffic Control Devices For Movable Span Bridge Signals (3 Sheets)

A	Area or Amperes
AAA	American Automobile Association
AASHO	American Association Of State Highway Officials
AASHTO	American Association Of State Highway And Transportation Officials
ABC	Asphalt Base Course
Abd.	Abandoned
ABS	Acrylonitrite-Butadiene-Styrene Pipe
AC, Ac.	Acre
AC or Asph. Conc.	Asphaltic Concrete
Accel.	Acceleration
Act.	Actuated
Adj.	Adjust
ADT	Average Daily Traffic
AADT	Annual Average Daily Traffic
Agg.	Aggregate
Ah.	Ahead
AISC	American Institute Of Steel Construction
Alt.	Alternate
Al.	Aluminum
AM	12:00 Midnight Until 12:59 Noon
ANSI	American National Standards Institute
AOS	Apparent Opening Size
Appl.	Applied, Application
Apprh.	Approach
Approx.	Approximate
ARTBA	American Road & Transportation Builders Association
Artf.	Artificial
Asph.	Asphalt
Assem.	Assembly
Assn.	Association
Assoc.	Associate, Association
ASTM	American Society For Testing Materials
Attn.	Attention
Attnuatr.	Attenuator
Aux. or Auxil.	Auxiliary
Ave.	Avenue
AWG	American Wire Gauge
AWS	American Welding Society
Az.	Azimuth
B to B	Back to Back
Basc.	Bascule
Bbl.	Barrel
BC	Bottle Cap or Bolt Circle
B/C, B.C.	Back Of Curb
BCCMP	Bituminous Coated Corrugated Metal Pipe Culvert
BCPA	Bituminous Coated Pipe Arch Culvert
BCPCMP	Bituminous Coated And Paved Corrugated Metal Pipe Culvert
BCPPA	Bituminous Coated And Paved Pipe Arch Culvert
BCT	Breakaway Cable Terminal
BE	Buried Electric
Beg.	Begin
Bit.	Bituminous
Bk.	Back
BL, BLC	Base Line, Base Line Control
Bldg.	Building
Blkhd.	Bulkhead
Blvd.	Boulevard
BM	Bench Mark
Bndry.	Boundary
Bdr.	Border
Bot.	Bottom
BP	Borrow Pit
Bq.	Becquerel
Br.	Bridge
Brg.	Bearing
Brkwy.	Breakaway
BT	Buried Telephone Cable or Duct
Btfly.	Butterfly
BW	Barbed Wire, Bottom Width or Both Ways
BO	Basin Outlet
C	Cantilever Length, Cut, Colorless, Coulomb or Cycle Length
°C	Degree Celsius
C & G	Curb And Gutter
CA	Coarse Aggregate
Cap.	Capacity
CAP	Corrugated Aluminum Pipe
Caps.	Capital Letters
CATV	Cable Television
CB	Catch Basin
CBC	Concrete Box Culvert
CBS	Concrete Box Structure
CC, C/C, or C to C	Center to Center
CCEW	Center to Center Each Way
CD	Cross Drain
cd	Candela
Cem.	Cement or Cemetery
Cem'd.	Cemented
CFS	Cubic Feet Per Second
Ch.	Channel
Chchg.	Channel Change
Chg.	Changeable
CI	Cast Iron
CIP	Cast Iron Pipe
CIPL	Cast In Place
cir. or circ.	Circle or Circular
circ.	Circumference
Ckt.	Circuit
Cl.	Clearance
CL or C/L	Center Line
CM	Concrete Monument
CMB	Concrete Median Barrier
CMP	Corrugated Metal Pipe
CMPA	Corrugated Metal Pipe Arch
Co.	County or Company
Col.	Column
Com.	Commercial or Common
COMM	Committee or By Committee
Comp.	Composite
Con.	Connect or Connection
Conc.	Concrete
Const.	Construct or Construction
Contrl.	Controller
Cont.	Continuation
Contr.	Contractor
Coord.	Coordinate
Cor.	Corner
Corr.	Corrugated
CP	Concrete Pipe
CPE	Corrugated Polyethylene Pipe
CR	Control Radius or County Road
CRA	Clear Recovery Area
Crs. or Cse.	Course
CS	Curve To Spiral
CSP	Corrugated Steel Pipe
CT	Clear Trunk
Ctlvr.	Cantilever
Ctr.	Center
CU or Cu	Copper
Culv.	Culvert
Cwt.	Hundredweight
CY	Cubic Yard
Cyl.	Cylindrical
CZ	Clear Zone
D	Degree Of Curvature, Depth, Density, Distance, Diameter or Directional Distribution
DA	Drainage Area or Deflection Angle
DBI	Ditch Bottom Inlet
Dbl.	Double
DCS	Degree Of Curvature (Spiral)
DD	Dry Density
DDHV	Directional Design Hour Traffic
Decel.	Deceleration
Deg.	Degree
Delin.	Delineators
Demobl.	Demobilization
Dept.	Department
Det.	Detour
DGN or Dgn.	Design
DHV	Design Hourly Volume
DHW	Design High Water
DT	Ditch
DI	Drop Inlet
Dia. or D	Diameter
Dim.	Dimension
Dist.	Distance
Disp.	Disposal
DLS	District Location Surveyor
DMM	Domestic Mail Manual
DOT	Department Of Transportation
DPI	Ditch Point Intersection
Dr. or DR	Drain, Drive or Design Review
Driv.	Driven
Drwy.	Driveway
DS	Design Speed
DSL	Design Service Life
Dwg.	Drawing
E	East or External Distance
e	Rate Of Superelevation
E to E	End to End
EA or Ea.	Each
EB	Eastbound
El. or Elev.	Elevation
Elast.	Elastomeric
Elec.	Electric
Ellip.	Elliptical
Embk.	Embankment
Emul.	Emulsified
Encl.	Enclosure
Engr.	Engineer
EOS	End Of Survey or Equivalent Opening Size
Eq.	Equation or Equal
Equip.	Equipment
Esmt.	Easement
Est. or Estm.	Estimate
Est.	Establish or Established
Etc. or etc.	Et Cetera (And So Forth)
EW	Endwall
Exc. or Excav.	Excavation
Exist.	Existing
Exp.	Expansion
Ext.	Extension
F	Fill, Farad
F or Final	Final Quantity
F & I	Furnish & Install
F to F	Face to Face
FA	Federal Aid or Fine Aggregate
FAC	Florida Administrative Code
FAP	Federal Aid Project
FC	Friction Course
FD	French Drain
Fdn.	Foundation
FDOT	Florida Department Of Transportation
FE	Floor Elevation
Fed.	Federal
Fert.	Fertilizer
FES	Flared End Section
FETS	Flared End Terminal Section
FH	Fire Hydrant
FHWA	Federal Highway Administration
Fig.	Figure
Fin.	Finish
FL	Flow Line
FL, Fl. or Fla.	Florida
Flex.	Flexible
FNQ	Fuse (Type Slow Burn)
FPM or fpm	Feet Per Minute
FPS or fps	Feet Per Second
FR or Fr.	Frame
Frang.	Frangible
Freq.	Frequency
FS	For Side
Ft.	Foot or Feet
FTB	Floating Turbitity Barrier
FTBA	Florida Transportation Builder Association
Furn.	Furnish
Fut.	Future
G	Giga or Gauss
g	Gram or Gravity
Galv.	Galvanized
Ga.	Gauge or Gage
Ga. or Gal.	Gallon
Gar.	Garage
GD	Gutter Drain
GIP	Galvanized Iron Pipe
GM	Gas Main
GP	Grade Point
Gr.	Grade, Guardrail or Grate
Gr. or Gro.	Gross
GRC	Rigid Steel Conduit
Grd.	Ground
gross km	Gross Kilometer
Gr. Wt. or gr. wt.	Gross Weight
Gtfr.	Gutter
Gy	Gray
H	Henry
h	Hour or Hecto
ha	Hectare
HB	Hay Bales
HD	High Density or Heavy Duty
HD or Hd.	Head
Hdwl.	Headwall
Hfl	Heavy Hex
Hndrl	Handrail
HOA	Hand/Off/Automatic
Horiz. or Hor.	Horizontal
HP	High Pressure or Horsepower
Hr.	Hour
HS	High Strength
Hse.	House
Ht.	Height
HW	High Water or Hot Water
Hwy.	Highway
Hyd.	Hydrant or Hydraulic
Hz	Hertz
I	External Angle (Delta), Interstate
Intchg. or Ichg.	Interchange
IES	Illuminating Engineering Society
ID	Inside Diameter or Identification
IMC	Intermediate Metal Conduit
In.	Inch
Inc.	Incorporated or Including
Incl. or Inc.	Included
Ind.	Industry or Industrial
IP	Iron Pipe
Install.	Installed
Isect.	Intersection
Isl.	Island
ITE	Institute Of Transportation Engineers
J	Joule
JB	Junction Box
Jct.	Junction
Jt.	Joint
K	Design Hour Factor or Kelvin
k	Kilo (prefix)
kg	Kilogram
kg/m	Kilogram Per Meter
kg/m^2	Kilogram Per Square Meter
kg/m^3	Kilogram Per Cubic Meter
Kilo	One Thousand
Kip	1000 Pounds
km	Kilometer
km/h	Kilometer Per Hour
kn	Knot
kPa	Kilopascal
ksi	Kips Per Square Inch
kV	Kilovolt
kVA	Kilovolt Ampere
kWh	Kilowatthour
L	Length, Length Of Curve, Liter, Left
2-L	Two-Lane
2L1W	Two-Lane One-Way
2L2W	Two-Lane Two-Way
LA or L/A	Limited Access
lane km	Lane Kilometer
Lat.	Lateral or Latitude
Lb.	Pound
LBR	Limerock Bearing Ratio
LC	Long Chord
Lgth.	Length
Lin.	Linear
lm	Lumen
Lmrk.	Limerock
Loc.	Location
LS	Length Of Spiral
LT	Left Turn
Lt.	Left
Ltd.	Lighted or Limited
Lum.	Luminaire
L/W	Lightweight
lx	Lux
M	Mass, Middle Ordinate Length or Mega
m	Meter or Milli
m^2	Square Meter or Meter Square
m^3	Cubic Meter or Meter Cubed
m^3/m	Cubic Meter Per Meter
m/s	Meters Per Second
Mach.	Machine
Maint.	Maintenance
Matl.	Material
Max.	Maximum
MB	Median Barrier
MBM	Thousand (Feet) Board Measure
Med.	Median
Mega	One Million
Memb.	Member
MES	Mitered End Section
Mess.	Message
Mfg.	Manufactured or Manufacturer
MG	1000 Gallons
Mhl	Manhole
MHW	Mean High Water
μ	Micro
Mi.	Mile
Micro	One-Millionth
Mid.	Middle
Mil	One-Thousandth Of An Inch
Mil.	Military
Milli	One-Thousanth
Min.	Minimum or Minute
Misc.	Miscellaneous
mL	Milliliter
MLW	Mean Low Water
mm	Millimeter
Mobl.	Mobilization
Mod.	Modify or Modified
Mol	Mole
Mon.	Monument
MOT	Maintenance Of Traffic
MP	Mile Post
MPa	Megapascal
MPH or mph	Miles Per Hour
MSL	Mean Sea Level
Mtd.	Mounted
MUTCD	Manual On Uniform Traffic Control Device
MUTS	Manual On Uniform Traffic Studies
N	North or Newton
N/m	Newtons Per Meter
N/m^2	Newtons Per Square Meter
N/m^3	Newtons Per Cubic Meter

STATE OF FLORIDA DEPARTMENT OF TRANSPORTATION
ROAD DESIGN

STANDARD ABBREVIATIONS

	Names	Dates
Designed By		
Drawn By		
Checked By		

Approved By Freddie Simmons
State Roadway Design Engineer

F.H.W.A. Approved:

Revision No.	Sheet No.	Index No.
94	1 of 2	001

N/mm²	Newtons Per Square Millimeter
NA or N/A	Not Available or Not Applicable
N & C	Nail & Cap
NB	Northbound
NC	National Coarse
NDCBU	Neighborhood Delivery And Collection Box Unit
NE	Northeast
net km	Net Kilometer
NEMA	National Electrical Manufacturers Association
NGVD	National Geodetic Vertical Datum of 1929
NGS	National Geodetic Survey
NHW	Normal High Water
NIC	Not In Contract
NJ	New Jersey
Nm	Newton Meter
No.	Number
Nom.	Nominal
Norm.	Normal
NS	Non Stress, Not Suitable or Near Side
NT, N&T	Non Traffic, Nail & Tin
NTS	Not To Scale
NW	Northwest
Opass	Overpass
O to O or o to o	Out to Out
OA	Overall
OC	On Center
OD	Outside Diameter
OE	Overhead Electric
OH, OHD or Ohd.	Overhead
Opt.	Option, Optional or Optically
OT	Overhead Telephone
Oz.	Ounce
Ω	Ohm
P	Passenger Car & Light Delivery Truck
P or Plan	Plan Quantity
Pa·s	Pascal
Par.	Parallel
Pas	Pascal Second
Part.	Participation or Partition
Pavt.	Pavement
PC	Point Of Curvature
PCBC	Precast Concrete Box Culvert
PCC	Point Of Compound Curvature or Plain Cement Concrete
PCE	Permanent Construction Easement
PE	Professional Engineer
Ped	Pedestrian or Pedestal
Pen.	Penetration
PG	Profile Grade
PGL	Profile Grade Line
Ph.	Phase
pH	Measure Of Acidity or Alkalinity
PI	Point Of Intersection
Pkg.	Parking
PL	Property Line
PM	12:00 Noon Until 11:59 Midnight
POC	Point On Curve
POST	Point On Semi-Tangent
POT	Point On Tangent
PP	Power Pole
Pr.	Pair
PRC	Point Of Reverse Curvature
Prcst.	Precast
Prest.	Prestressed
Prob.	Probability
Prod.	Product, Production, Producer or Produced
Prog.	Program or Progression
Proj.	Project or Projection
PRM	Permanent Reference Monument
Prov.	Provisions
PS & E	Plans, Specifications And Estimates
PSF or psf	Pounds Per Square Foot
PSI or psi	Pounds Per Square Inch
PT	Point Of Tangency
PVC	Polyvinyl Chloride
PW	Pressure Water
Q	Peak Discharge or Flow Volume (CFS)
R or Rad.	Radius
R or Rng.	Range
rad	Radian
rad/s	Radian Per Second
RBAC	Rock Base Asphaltic Concrete
RBST	Rock Base Surface Treatment
RCP	Reinforced Concrete Pipe
RCPA	Reinforced Concrete Pipe Arch
Rd.	Road or Round
Rdsd.	Roadside
Rdwy.	Roadway
Rec.	Recovery
Rect.	Reticuline or Rectangular
Ref.	Reference
Refl.	Reflective
Reg.	Region, Regular, Registered or Regulation
Reinf.	Reinforced or Reinforcing
Rejuv.	Rejuvenation
Reloc.	Relocated
Rem.	Removal
Repl.	Replace
Req. or Reqd.	Required
Res.	Residence or Residential
RHW	Insulation (Moisture & Heat Resistant Rubber)
RM	Reference Monument
r/min	Revolution Per Minute
RP	Reference Point
rpm	Revolution Per Minute
RPM	Raised Reflective Pavement Markers
r/s	Revolution Per Second
RR	Railroad
Rsf.	Resurface
Rt.	Right
R/W, ROW	Right Of Way
S or s	Speed, South, Seimens, Or Second
SAHM	Sand-Asphalt Hot Mix
SAN or San.	Sanitary
SB	Southbound
SBAC	Shell Base Asphaltic Concrete
SBRM	Sand Bituminous Road Mix
SBST	Shell Base Surface Treatment
SC	Seal Coat or Spiral To Curve
Sch.	Schedule
SCST	Sand-Clay Surface Treatment
SD	Side Drain
SE	Southeast
Sec.	Second
Sect.	Section
Sed.	Sediment
Sep.	Separator
Seq.	Sequential
Serv.	Service
SF	Adjustment Factor In Percent
SG	Subgrade
SG or Sp.Gr.	Specific Gravity
Sh. or Sht.	Sheet
Shldr.	Shoulder
SHW	Seasonal High Water
Spa.	Space
Spcg. or Sp.	Spacing
Spec.	Specification
Sq. Ft. or SF	Square Foot
Sq. In.	Square Inch
Sq. Yd. or SY	Square Yard
SR or S.R.	State Road
SS	Storm Sewer, Sanitary Sewer
SSMD	Solid State Modular Design
ST	Surface Treatment or Spiral To Tangent
St. or ST.	Street
Sta.	Station
Stab.	Stability or Stabilization
Std.	Standard
Stg.	Strong
Stge.	Storage
Stl.	Steel
Str.	Structure
Sty.	Story
SU	Single Unit Trucks
Sub. or Subs.	Subsoil
Sub. or Subst.	Substitute
Subgr.	Subgrade
Suppts.	Supports
SUR or Sur.	Survey
Surf.	Surface
SW	Southwest
SW or Swk.	Sidewalk
Sys. or Syst.	System
Sv	Sievert
T	Tangent, Length Of Curve, Percent Trucks, Tesla,
T, TWP or Twp.	Township
t	Metric Ton
tan.	Tangent
TBM	Temporary Bench Mark
TC	Tangent To Curve
TCB	Temporary Concrete Barrier
TCE	Temporary Construction Easement
TCP	Terra Cotta Pipe
TCZ	Traffic Control Zone
Tel.	Telephone
Temp.	Temperature or Temporary
Traf.	Traffic
Theo.	Theoretical
THRMPLSTC	Thermoplastic
THW or THWN	Insulation (Flame Retardant, Moisture And Heat Resistant Thermoplastic)
Thick.	Thickness
Tk	Thick, Thickness or Truck
Tn.	Ton
Trans.	Transition, Transverse, Translate or Transportation
Treat.	Treatment
TS	Tangent To Spiral
TSC	Length Of Tangent (Spiral Curve)
Typ.	Typical
Upass.	Underpass
UG	Underground
UL	Underwriters Laboratories
Ult.	Ultimate
Unltd.	Unlimited
Unddr.	Underdrains
Undrdwy.	Underroadway
UNL or Undl.	Unloaded
Untr.	Untreated
USC & GS	US Coast and Geodetic Survey (now National Geodetic Survey)
USGS	US Geological Survey
USPS	United States Postal Service
Util.	Utilities
V	Volt, Velocity, Volume or Hourly Volume
Var.	Varies, Variable or Variance
VC	Vertical Curve
VCP	Vitrified Clay Pipe
Veh.	Vehicle
Vert.	Vertical
VF	Vertical Foot
Vh	Verified Horizontal Location
VMS	Variable Message Sign
Vol.	Volume
VP	Vertical Panel
VPD or Vpd.	Vehicles Per Day
VPH or Vph.	Vehicles Per Hour
VPHPL or Vphpl.	Vehicles Per Hour Per Lane
VRMS	Volts Root Mean Square
Vv	Verified Vertical Elevation
Vvh	Verified Vertical Elevation And Horizontal Location
VW	Variable Width
W	Width, Wide, West or Watt
W/C	Water-Cement Ratio
WB	Westbound
Wb.	Weber
WB40	Intermediate Semi Trailer
WB50	Large Semi Trailer
WB60	Tandem Semi Trailer
WM	Water Main
W.P.I.	Work Program Item
WT	Water Table Or Weight
WWF	Welded Wire Fabric
X	Coordinate Value (East-West Direction) or Extra
X Rd.	Cross Road
Xing.	Crossing
Xsec.	Cross Section
Y	Coordinate Value (North-South Direction)
Yr.	Year

UNITS OF MEASURE

US MEASUREMENT

AC	Acre
AS	Assembly
BU	Bushel
CF	Cubic Foot
CO	Cleanout
CY	Cubic Yard
EA	Each
ED	Each Day
GA	Gallon
GM	Gross Mile
LB	Pound
LF	Linear Foot
LM	Lane Mile
LO	Per Location
LS	Lump Sum
LU	Luminaire
MB	Thousand Board Measure
MG	Thousand Gallons
MH	Man Hour
NM	Net Mile
PA	Per Analysis
PB	Per Building
PE	Pile
PI	Per Intersection
PL	Plant
PM	Per Mile
PS	Per Set
PW	Per Well
SF	Square Foot
SY	Square Yard
TN	Ton

METRIC MEASUREMENT

AS	Assembly
CO	Cleanout
DA	Day
EA	Each
ED	Each Day
GK	Gross Kilometer
HA	Hectare
HR	Hour
KG	Kilogram
KL	Kiloliter
KI	Kilometer
LI	Liter
LK	Lane Kilometer
LO	Per Location
LS	Lump Sum
LS/AS	Lump Sum Per Assembly
LS/DA	Lump Sum Per Day
LS/EA	Lump Sum Per Each
LS/HA	Lump Sum Per Hectare
LS/KG	Lump Sum Per Kilogram
LS/LS	Lump Sum Per Lump Sum
LS/MT	Lump Sum Per Metric Ton
LS/MI	Lump Sum Per Linear Meter
LS/M2	Lump Sum Per Square Meter
LU	Luminaire
MH	Man Hour
MO	Month
MT	Metric Ton
MI	Meter
M2	Square Meter
M3	Cubic Meter
NK	Net Kilometer
PA	Per Analysis
PB	Per Building
PI	Per Intersection
PL	Plant
PS	Per Set, Each
PW	Per Well

STATE OF FLORIDA DEPARTMENT OF TRANSPORTATION
ROAD DESIGN

STANDARD ABBREVIATIONS

	Names	Dates
Designed By		
Drawn By		
Checked By		

Approved By Freddie Simmons
State Roadway Design Engineer

Revision No.	Sheet No.	Index No.
94	2 of 2	001

F.H.W.A. Approved:

STANDARD SYMBOLS FOR KEY MAP

- Highway With Full Control of Access
- Highway With Frontage Roads
- Highway Interchange
- Proposed Controlled Access Highway
- Divided Highway
- Hard Surfaced Road
- Soil, Gravel Or Shell Surfaced Road
- Graded And Drained Road
- Unimproved Road
- Primitive Road
- P — Private Road
- Streets In Inset Or Delimited Areas
- Extension Of Local Roads Within Cities
- FAI — Federal Aid Interstate Highway
- FAU — Federal Aid Urban Highway
- FAP — Federal Aid Primary Highway
- FAS — Federal Aid Secondary Highway
- NFR — National Forest Road
- SFR — State Forest Road
- SPR — State Park Road
- 00 — Interstate Highway
- 00 — US Numbered Highway
- 00 — State Highway
- 00 — County Road

- Railroad
- Double Track Railroad
- Abandoned Railroad
- Railroad Station
- Grade Crossing
- Railroad Above
- Railroad Below
- Military Field
- Commercial Or Municipal Airport
- Landing Area Or Strip
- Runways

- FF — Free Ferry
- TF — Toll Ferry
- Canal Or Drainage Ditch
- Intracoastal Waterway
- Narrow Stream
- Wide Stream
- Dam
- Dam Or Spillway With Lock
- Dam With Road
- Flood Control Structure
- Lake, Reservoir Or Pond
- Intermittent Pond
- M — Meandered Lake
- Marsh Or Swamp
- Mangroves
- Levee Or Dike
- Levee Or Dike With Road
- Highway Bridge
- 3 — Small Bridges Closely Spaced
- Drawbridge
- Highway Grade Separation
- Tunnel
- State Boundary Line
- County Boundary Line
- Civil Township Boundary
- Extended Township Line
- Land Grant Line
- Land Section Line
- State Survey Section Line
- Survey By Others
- Location Of Inset Boundary Within Map
- Military Reservation Boundary
- College Or University Boundary
- Corporate Limits
- Delimited Area, Population Est.
- Reservation, Forest Or Park Boundary
  Wildlife Refuge Boundary

- Residential Area Under Development
- Lighthouse
- State Capital
- County Seat
- Other City Or Village
- Seminole Indian Village
- Welcome Station
- WP — Wayside Park Or Small Park
- WP — Park With Boat Ramp
- B — Boat Ramp
- Museum
- Recreational Area Or Historic Site
- Scenic Site
- Post Office
- School
- Church
- Cemetery
- Church And Cemetery
- Hospital, Health Center Or Rest Home
- Toll House, Port Of Entry Or Weight Station
- Fair Grounds, Race Course Or Rodeo Arena
- Mine Or Strip Mine
- Governmental Research Station

- Agricultural Inspection Station
- FM — Farmers Market
- Game Preserve
- Game Checking Station
- Bird Sanctuary
- Fire Control Headquarters
- Lookout Tower
- FS — Fire Station
- Patrol Or Police Station
- Correctional Institution Or Road Camp
- DOT — Department of Transportation Facility
- Coast Guard Station
- A — Armory
- J — Junkyard
- F — Sanitary Fill
- S — Sewage Disposal Plant
- I — Incinerator
- Power Plant
- Power Substation
- Communications Facility
- Locked Gate Or Fence
- WOOD — Triangulation Station

GENERAL NOTE

1. Symbols on this index are for use on all Roadway, Signing and Marking, Signalization, and Lighting projects. For work zone traffic control symbols refer to Index 600. When similar symbols are used, additional notations may be required for clarity.

STATE OF FLORIDA DEPARTMENT OF TRANSPORTATION
ROAD DESIGN

STANDARD SYMBOLS

	Names	Dates
Designed By		
Drawn By		
Checked By		
F.H.W.A. Approved:		

Approved By Freddie Simmons
State Roadway Design Engineer

Revision No.	Sheet No.	Index No.
94	1 of 3	002

STANDARD SYMBOLS FOR PLAN SHEETS

GENERAL SYMBOLS

- State Line
- County Line
- Township Line
- Section Line
- City Line
- Base Or Survey Line
- Right-Of-Way
- Easement Line
- Limited Access Line
- Fence Line
- National Or State Park Or Forest
- Grant Line
- Railroad (Drainage Maps)
- Railroad (Detail Plans)
- Fence (Limited Access)
- Box Culvert
- Bridge
- Pipe Culvert-Mitered End Section
- Pipe Culvert-Straight Endwall
- Pipe Culvert-U-Type Endwall
- Pipe Culvert-Median Drain
- Pipe Culvert-Other End Treatments
- 457 — Storm Sewer
- Inlet
- Manhole
- Tied Longitudinal Joint
- Keyed Longitudinal Joint
- Doweled Transverse Expansion Joint
- Doweled Transverse Contraction Joint
- Tansverse Contraction Joint Without Dowels
- Survey Reference Point
- ALACHUA — Triangulation Station
- B.M. NO. 112 — Bench Mark
- Point Of Intersection
- North Arrow
- TYP. TYPE PAV'T WALK — Edges Of Existing Pavement And Sidewalk
- Guardrail
- Base Line
- Centerline
- Property Line
- Delta Angle
- Approximate
- Round Or Diameter
- Curb
- Curb And Gutter
- Water Well, Spring
- Levee
- MP 327 — Railroad Mile Post
- 3.6 — Gate
- Pump Island
- Storage Tank (Surface)
- Storage Tank (Underground)
- Mine Or Quarry
- B P — Borrow Pit
- Church
- S — Store
- RES — Residence
- B — Barn
- School
- Stream
- Shore Line
- Marsh
- Hedge
- Trees
- Edge Of Wooded Area
- Shrubbery
- Grove Or Orchard
- Lt. Skew Rt. ℄ Rt. Skew Lt. — Definition Of Skew For Cross Drains And Barrels Of Conrete Box Culverts
- Concrete
- Wood
- e — Rate Of Superelevation

UTILITY ADJUSTMENT SYMBOLS

EXISTING	PROPOSED	
		Power Pole
OE (7.5KV)	OE (7.5KV)	Overhead Electric
		Telephone Pole
OT (100PR)	OT (100PR)	Overhead Telephone Cable
OH (CATV)	OH (CATV)	Overhead Cable Television
		Combination Pole
		Guy Wire And Anchor Pin
BE (7.5KV)	BE (7.5KV)	Buried Electric
BE 4MTD (7.5KV)	BE 4MTD (7.5KV)	Buried Electric Duct
BT (200PR)	BT (200PR)	Buried Telephone Cable
BT 6MTD	BT 6MTD	Buried Telephone Duct
UG (CATV)	UG (CATV)	Underground Cable Television
		Tower
		Light Pole
152 GM	152 GM	Gas Main
152 WM	152 WM	Water Main
203 SAN	203 SAN	Sanitary Sewer
		Manhole
		Water Meter
		Valve
		Fire Hydrant

See General Note Sheet 1 Of 3.

STATE OF FLORIDA DEPARTMENT OF TRANSPORTATION
ROAD DESIGN

STANDARD SYMBOLS

	Names	Dates
Designed By		
Drawn By	CDP	08/72
Checked By	COR	08/72

Approved By Freddie Simmons
State Roadway Design Engineer

Revision No.	Sheet No.	Index No.
94	2 of 3	002

F.H.W.A. Approved: 07/07/75

STANDARD SYMBOLS FOR PLAN SHEETS

TRAFFIC SIGNALS SYMBOLS

EXISTING	PROPOSED	
		Traffic Signal Head (Span Wire Mounted)
		Traffic Signal Head (Pedestal Mounted)
		Traffic Signal Head (Mast Arm Mounted)
		Traffic Signal Pole (Concrete, Wood, Metal)
		Vehicle Detector (Loop)
		Signal Cable (On Messenger Wire)
		Conduit
		Vehicle Detector (Points)
		Pedestrian Detector
		Pedestrian Signal Head (Pole Or Pedestal Mounted)
		Controller Cabinet (Base Mounted)
		Controller Cabinet (Base Mounted)
W - D W		Walk - Dont Walk
FDW		Flashing Dont Walk
5		Signal Face Number
		Signal Lens
P		Programmed Signal Head
		Messenger Wire
3		Pole Tabulation Cross Reference
*3		Pole Tabulation Cross Reference (Joint Use Pole)
∅		Signal Phase

LIGHTING SYMBOLS

EXISTING	PROPOSED	
		Pole & Luminaire
		Existing Pole & Luminaire To Be Removed
		Final Position Of Relocated Or Adjusted Pole & Luminaire
		High Mast Lighting Tower
		City Or Utility Owned Luminaire & Pole
		PVC (Polyvinyl Chloride) Lighting Conduit And Conductors
		Rigid Galvanized Lighting Conduit And Conductors
		Lighting Pull-Box
		Light Distribution Point
		Joint Use Pole
		Pier Cap Underdeck Luminaire
		Pendant Hung Underdeck Luminaire

SIGNING AND PAVEMENT MARKING SYMBOLS

	Pavement Arrow
	Single Solid Line
	Double Solid Line
	Skip Line
	Stop Bar
	Traffic Sign (Post Mounted)
	Traffic Sign (Overhead)
13	Sign Number
700-83	Sign Item Number
	Traffic Flow Arrow

See General Notes, Sheet 1 of 3

STATE OF FLORIDA DEPARTMENT OF TRANSPORTATION
ROAD DESIGN

STANDARD SYMBOLS

	Names	Dates
Designed By		
Drawn By	CDP	08/72
Checked By	COR	08/72
F.H.W.A. Approved: 07/07/75		

Approved By Freddie Simmons
State Roadway Design Engineer

Revision No.	Sheet No.	Index No.
94	3 of 3	002

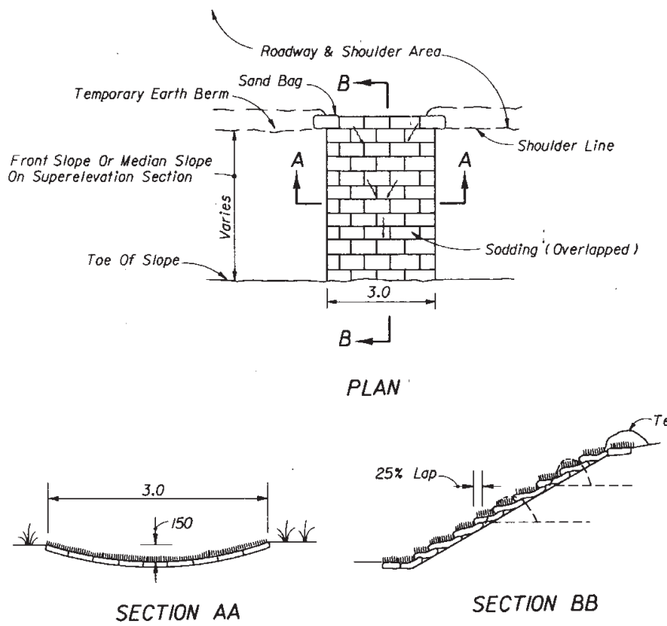

SOD FLUME (SODDING OVERLAPPED)

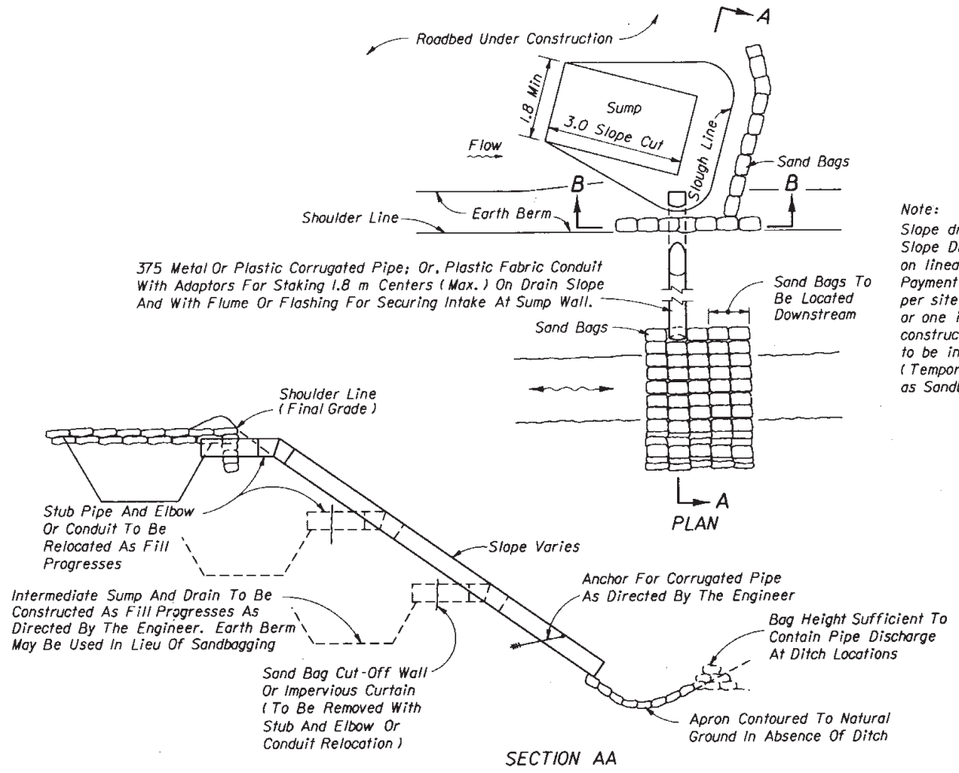

Note:
Slope drain pipe to be paid for as Slope Drains (Temporary), M1, based on linear meters of pipe or conduit installed. Payment to be made for one installation per site, including one stub and elbow or one intake flume or flashing. Sump construction and maintenance and curtains to be included in cost for Slope Drains (Temporary). Sand bags to be paid for as Sandbagging, M3.

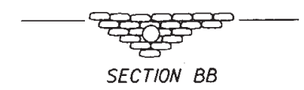

TEMPORARY SLOPE DRAIN

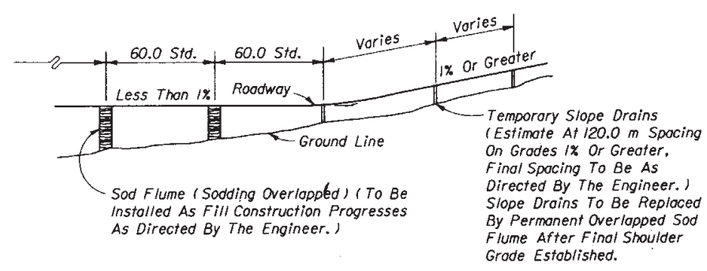

SLOPE DRAIN APPLICATION

STATE OF FLORIDA DEPARTMENT OF TRANSPORTATION
ROAD DESIGN

TEMPORARY SLOPE DRAIN AND SOD FLUME

	Names	Dates
Designed By		
Drawn By		
Checked By		
F.H.W.A. Approved:		10/07/80

Approved By S. A. McGehee
State Drainage Engineer

Revision No.	Sheet No.	Index No.
94	1 of 1	100

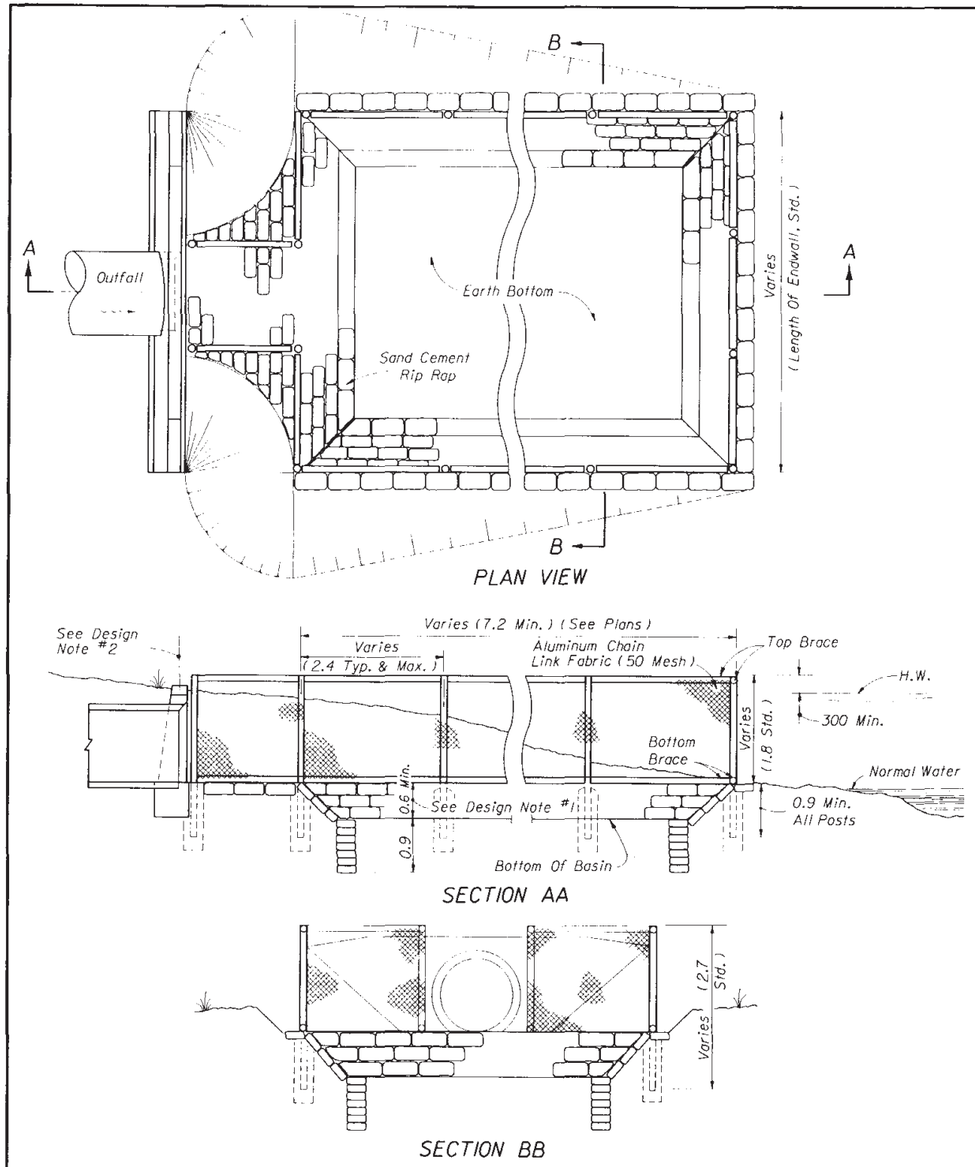

INTENDED FOR USE WHEN THE STORM SEWER OUTFALLS ADJACENT TO A SHORE LINE

TYPE A

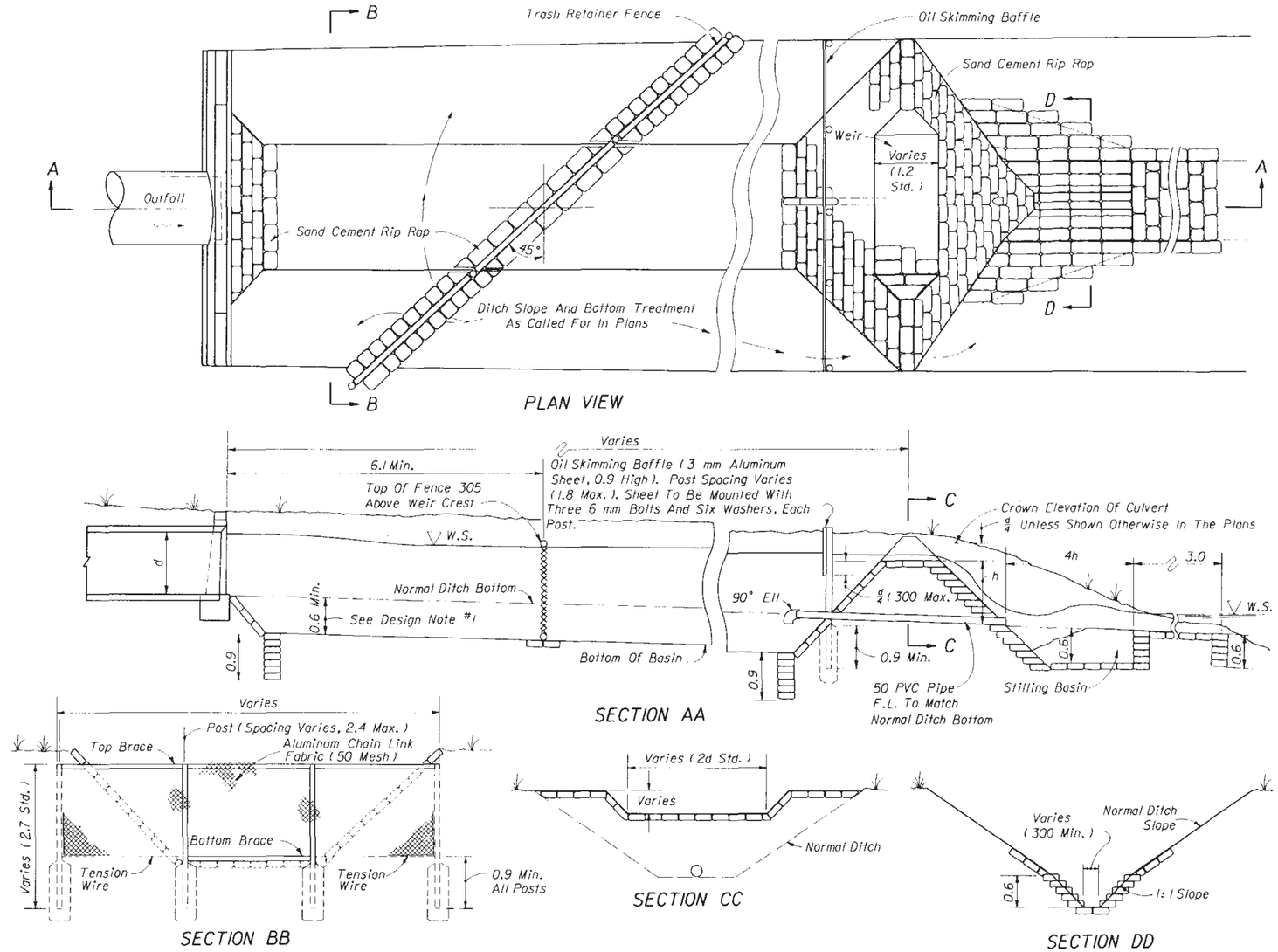

INTENDED FOR USE WHEN THE STORM SEWER OUTFALLS IN AN OPEN DITCH

TYPE B

DESIGN NOTES

1. Basins should be as deep as practical with a minimum depth of 0.6 meter.
2. In Type A, when the top of endwall is below high water, fence also will be required along the top of the endwall.
3. In Type B, the weir shall be located as far from the endwall as practical. On steep ditch grades two or more weirs may be required. Intermediate weirs shall be constructed without stilling basins.
4. In Type B, the 150 mm PVC pipe shall be constructed unless shown otherwise in the plans.

GENERAL CONSTRUCTION NOTES

1. Fence materials shall be aluminum or concrete only.
2. Aluminum posts shall be 75 mm diameter minimum. Aluminum rail braces shall be in accordance with Index 452. Concrete posts and rail braces shall be in accordance with Index 451. All posts to be set in concrete.
3. Fabric shall be installed to inside of posts and rail braces, and tied to posts and braces at 150 mm centers.
4. For additional details on fencing, see Index Nos. 451 and 452.
5. All basin slopes to be 1:1 unless detailed otherwise in the plans.
6. Sediment basins to be constructed prior to commencement of upland constuction. Maintenance and clean out to be by the Contractor until acceptance of project by the Engineer.

GENERAL NOTES

1. The cost for Type A and Type B trash retainer and sediment basins shall include the cost for riprap, fencing, baffles, piping and for sump and weir earthwork over and above ditch excavation called for in the plans. Payment for both Type A Type B shall be under the contract unit price for Sediment Basins, Each. Cleanouts as called for in the plans shall be paid for under the contract unit price for Sediment Basin Cleanouts, CO.

STATE OF FLORIDA DEPARTMENT OF TRANSPORTATION
ROAD DESIGN

TRASH RETAINER AND SEDIMENT BASIN

	Names	Dates	Approved By		
Designed By	WJR	05/74	State Drainage Engineer		
Drawn By					
Checked By	HLB	06/74	Revision No.	Sheet No.	Index No.
F.H.W.A. Approved:		10/07/80	94	1 of 1	101

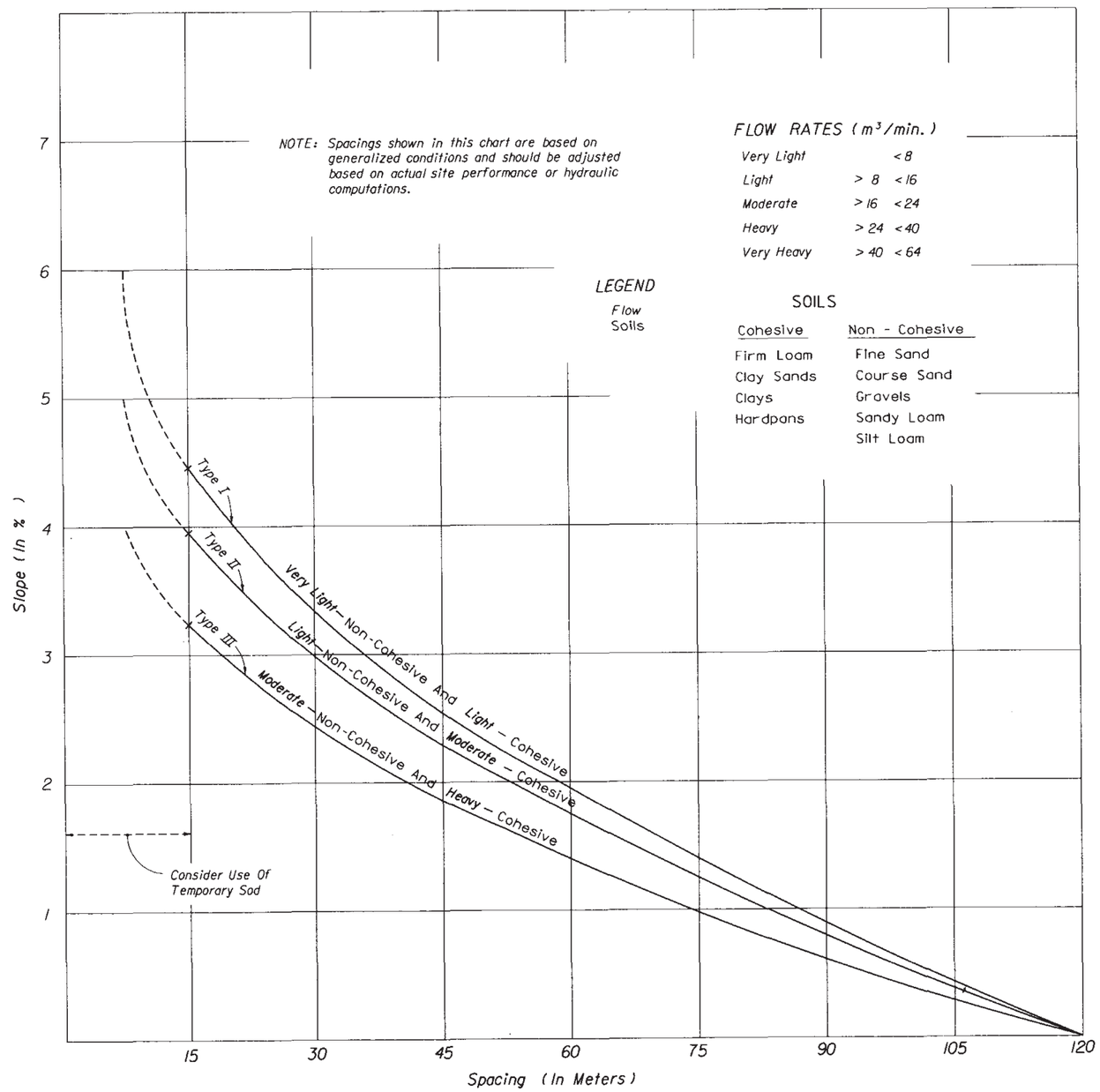

CHART I

RECOMMENDED SPACING FOR TYPE I AND TYPE II HAY BALE BARRIERS, AND TYPE III SILT FENCES

STATE OF FLORIDA DEPARTMENT OF TRANSPORTATION
ROAD DESIGN

BALED HAY OR STRAW BARRIERS AND SILT FENCES

	Names	Dates
Designed By	EGR	02/80
Drawn By	HSD	09/82
Checked By	JVG	09/82
F.H.W.A. Approved:		09/23/82

Approved By
State Drainage Engineer

Revision No.	Sheet No.	Index No.
94	1 of 3	102

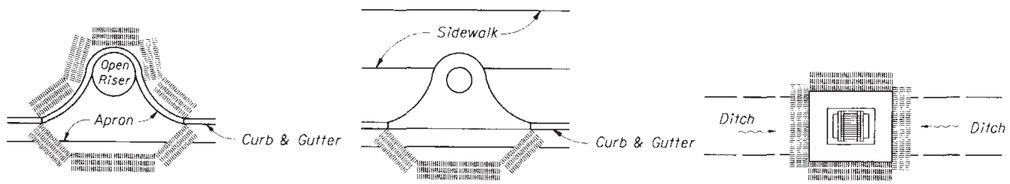

PARTIAL INLET COMPLETED INLET DITCH BOTTOM INLET

Anchor Bales With 2- 50 x 50 x 1.2 Stakes Per Bale

PROTECTION AROUND INLETS OR SIMILAR STRUCTURES

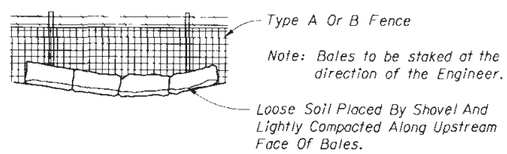

Note: Bales to be staked at the direction of the Engineer.

BALES BACKED BY FENCE

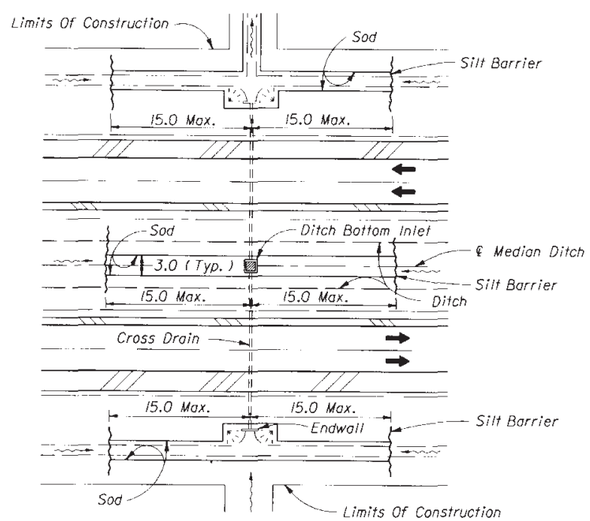

DITCH INSTALLATIONS AT DRAINAGE STRUCTURES

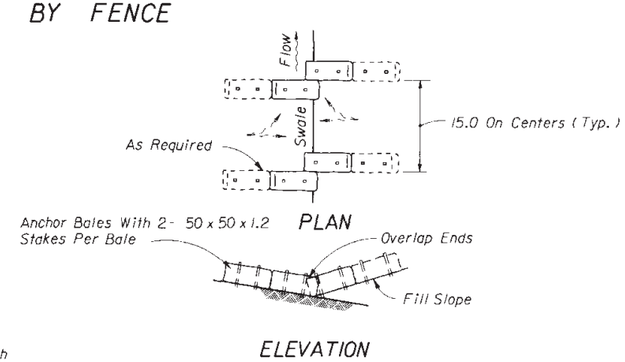

PLAN

ELEVATION

TO BE USED AT SELECTED SITES WHERE THE NATURAL GROUND SLOPES TOWARD THE TOE OF SLOPE

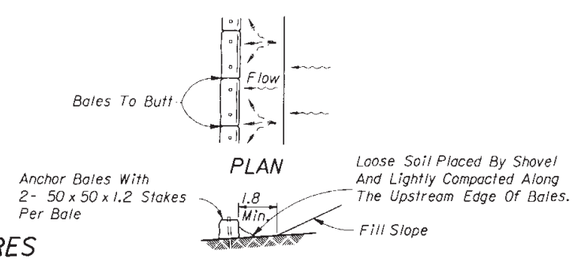

PLAN

ELEVATION

TO BE USED AT SELECTED SITES WHERE THE NATURAL GROUND SLOPES TOWARD THE TOE OF SLOPE

BARRIERS FOR FILL SLOPES

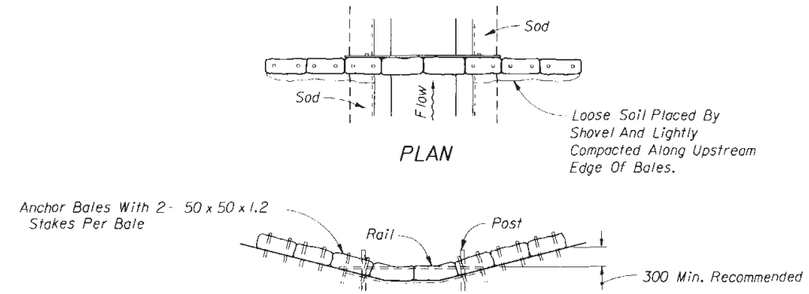

PLAN

ELEVATION

Spacing: Bale barriers for paved ditches should be spaced in accordance with Chart I, Sheet 1 of 3, Index No. 102

BARRIER FOR PAVED DITCH

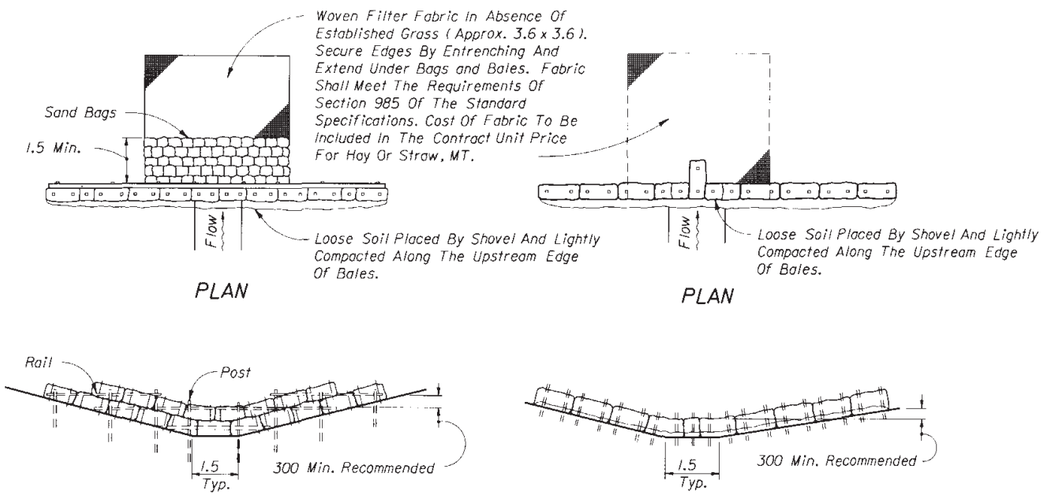

PLAN PLAN

Anchor Lower Bales With 2- 50 x 50 x 1.2 Stakes Per Bale.
Anchor Top Bales To Lower Bales With 2- 50 x 50 x 1.2 Stakes Per Bale.

Anchor Bales With 2- 50 x 50 x 1.2 Stakes Per Bales

ELEVATION ELEVATION

Application and Spacing: The use of Types I & II bale barriers should be limited to the conditions outlined in Chart I, Sheet 1 of 3, Index No. 102

TYPE II TYPE I

BARRIER FOR UNPAVED DITCHES

STATE OF FLORIDA DEPARTMENT OF TRANSPORTATION
ROAD DESIGN

BALED HAY OR STRAW BARRIERS AND SILT FENCES

	Names	Dates
Designed By	WJR	5/74
Drawn By		
Checked By	HLB	6/74
F.H.W.A. Approved:		10/07/80

Approved By — State Drainage Engineer

Revision No.	Sheet No.	Index No.
94	2 of 3	102

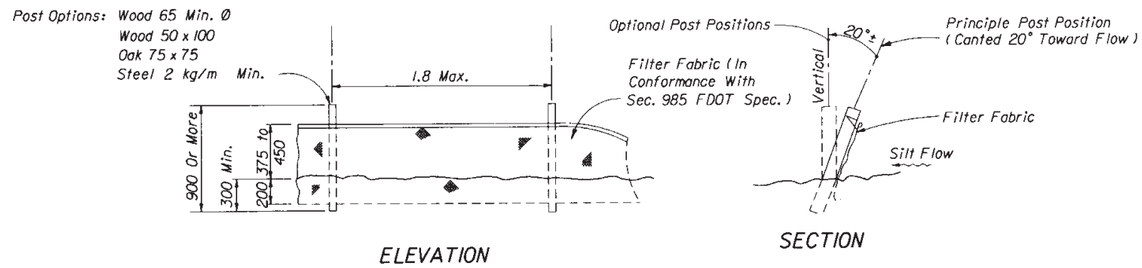

Note: Silt Fence to be paid for under the contract unit price for Staked Silt Fence (MI).

TYPE III SILT FENCE

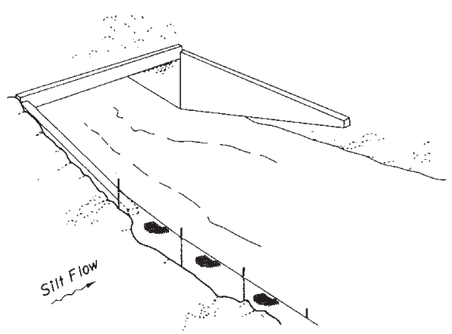

Type III Silt Fence

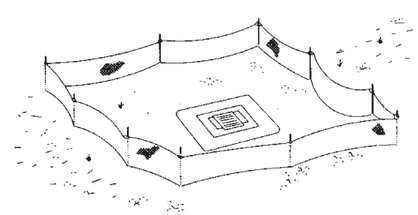

Type III Silt Fence Protection Around Ditch Bottom Inlets.

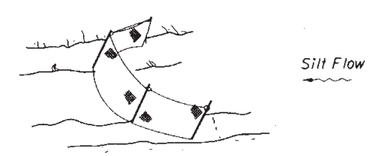

Note: Spacing for Type III Fence to be in accordance with Chart I, Sheet 1 of 3 and ditch installations at drainage structures Sheet 2 of 3.

Type III Silt Fence

Do not deploy in a manner that silt fences will act as a dam across permanent flowing watercourses. Silt fences are to be used at upland locations and turbidity barriers used at permanent bodies of water.

SILT FENCE APPLICATIONS

STATE OF FLORIDA DEPARTMENT OF TRANSPORTATION
ROAD DESIGN

BALED HAY OR STRAW BARRIERS AND SILT FENCES

	Names	Dates
Designed By	RAA/CJA	09/85
Drawn By	LRE	09/85
Checked By	RAA	10/85
F.H.W.A. Approved:		

Approved By A. A. McLemore
State Drainage Engineer

Revision No.	Sheet No.	Index No.
94	3 of 3	102

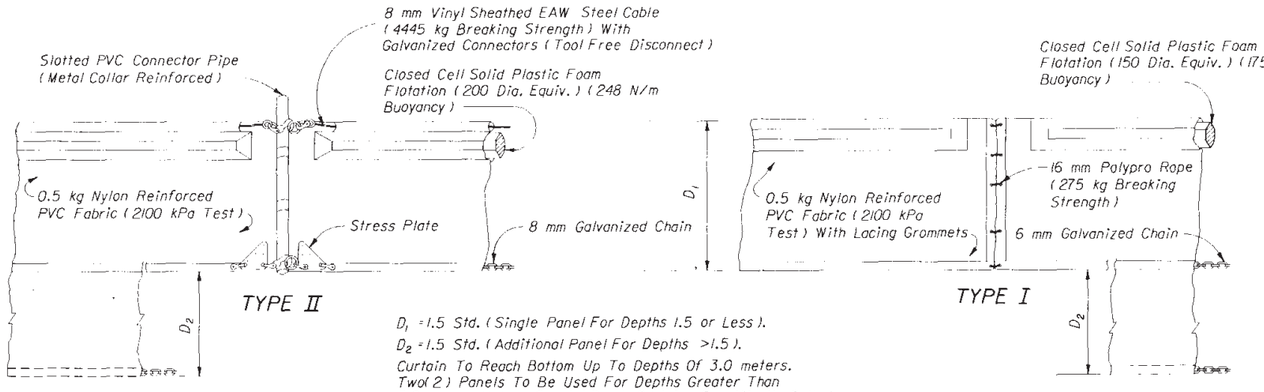

D_1 = 1.5 Std. (Single Panel For Depths 1.5 or Less).
D_2 = 1.5 Std. (Additional Panel For Depths >1.5).
Curtain To Reach Bottom Up To Depths Of 3.0 meters. Two(2) Panels To Be Used For Depths Greater Than 3.0 meters Unless Special Depth Curtains Specifically Called For In The Plans Or As Determined By The Engineer.

NOTICE: COMPONENTS OF TYPES I AND II MAY BE SIMILAR OR IDENTICAL TO PROPRIETARY DESIGNS. ANY INFRINGEMENT ON THE PROPRIETARY RIGHTS OF THE DESIGNER SHALL BE THE SOLE RESPONSIBILITY OF THE USER. SUBSTITUTIONS FOR TYPES I AND II SHALL BE AS APPROVED BY THE ENGINEER.

FLOATING TURBIDITY BARRIERS

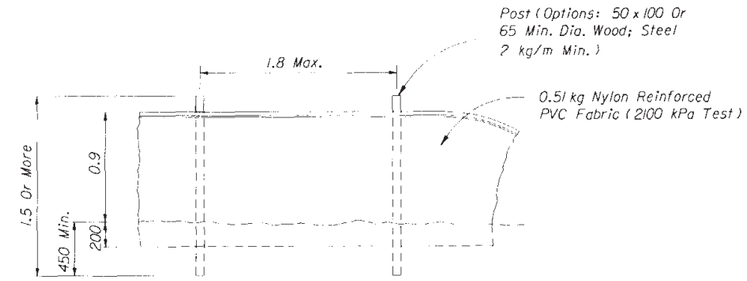

STAKED TURBIDITY BARRIER

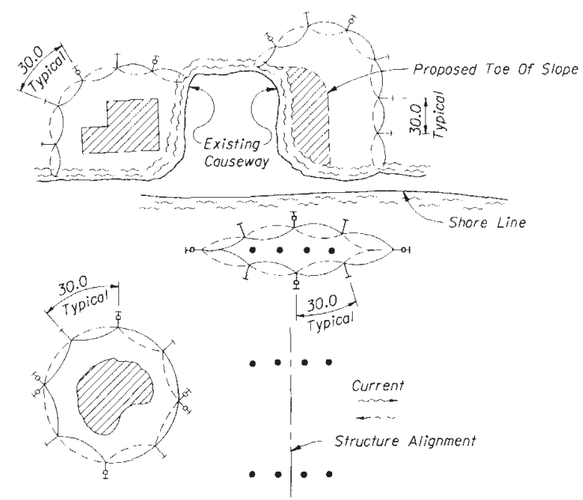

LEGEND

- Pile Locations
- Dredge Or Fill Area
- Mooring Buoy w/Anchor
- Anchor
- Barrier Movement Due To Current Action

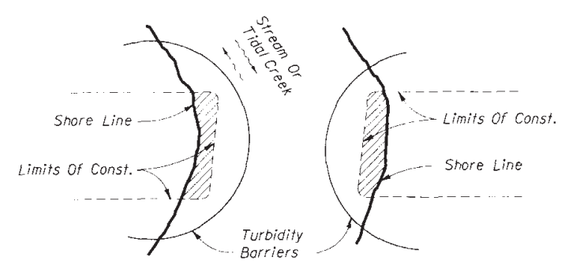

Note:
Turbidity barriers for flowing streams and tidal creeks may be either floating, or staked types or any combinations of types that will suit site conditions and meet erosion control and water quality requirements. The barrier type(s) will be at the Contractors option unless otherwise specified in the plans, however payment will be under the pay item(s) established in the plans for Floating Turbidity Barrier and/or Staked Turbidity Barrier. Posts in staked turbidity barriers to be installed in vertical position unless otherwise directed by the Engineer.

NOTES:

1. Turbidity barriers are to be used in all permanent bodies of water regardless of water depth.
2. Number and spacing of anchors dependent on current velocities.
3. Deployment of barrier around pile locations may vary to accommodate construction operations.
4. Navigation may require segmenting barrier during construction operations.
5. For additional information see Section 104 of the Standard Specifications.

TURBIDITY BARRIER APPLICATIONS

GENERAL NOTES

1. Floating turbidity barriers are to be paid for under the contract unit price for Turbidity Barrier Floating, Mi.
2. Staked turbidity barriers are to be paid for under the contract unit price for Turbidity Barrier Staked, Mi.

STATE OF FLORIDA DEPARTMENT OF TRANSPORTATION
ROAD DESIGN

TURBIDITY BARRIERS

	Names	Dates
Designed By	RAA/CJA	9/85
Drawn By	LRE	9/85
Checked By	RAA	10/85

Approved By D. A. McLeroure
State Drainage Engineer

Revision No.	Sheet No.	Index No.
94	1 of 1	103

F.H.W.A. Approved:

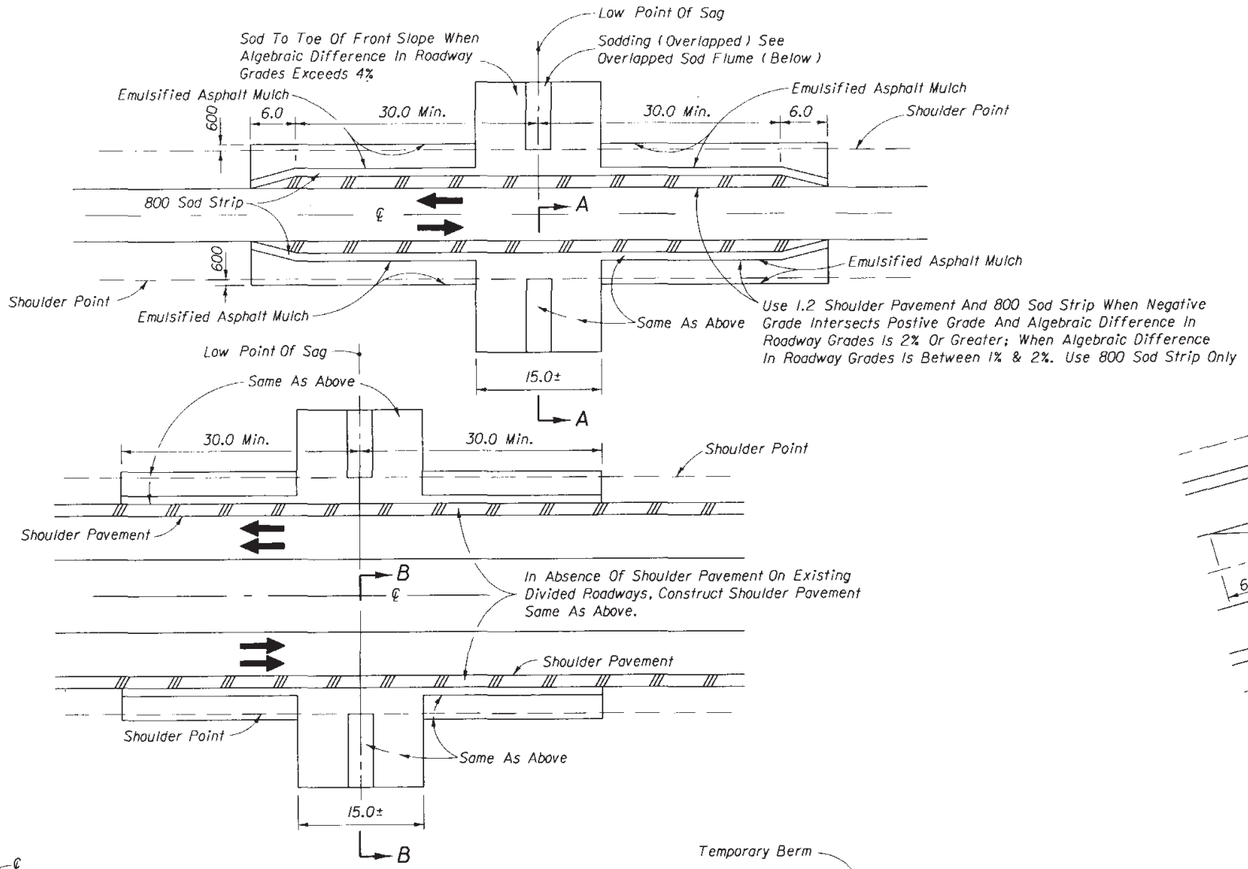

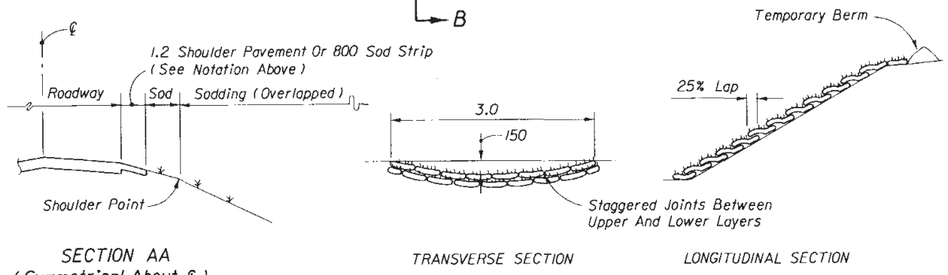

SECTION AA
(Symmetrical About ℄)

OVERLAPPED SOD FLUME

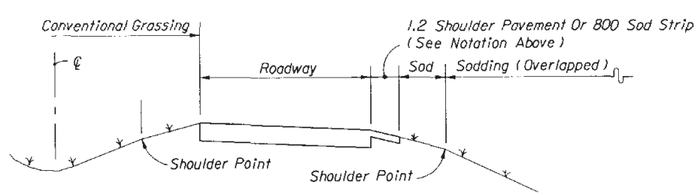

SECTION BB
(Symmetrical About ℄)

SHOULDER AND SLOPE TREATMENT IN SAG VERTICAL CURVES

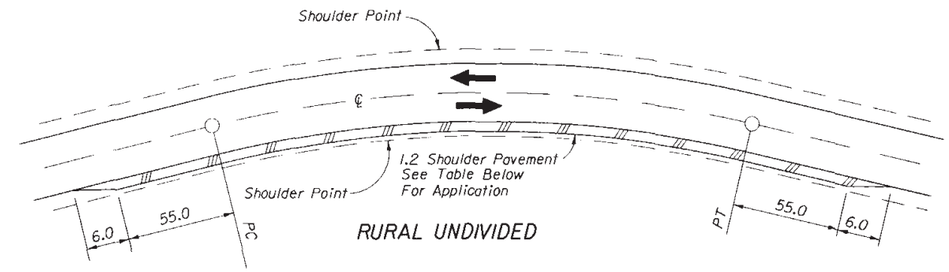

RURAL UNDIVIDED

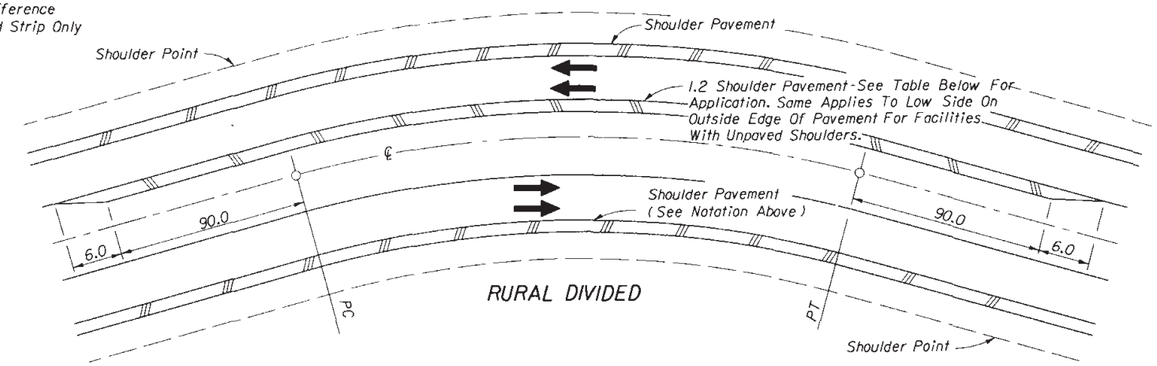

RURAL DIVIDED

CRITERIA FOR PAVING SHOULDER ON DIVIDED AND UNDIVIDED FACILITIES		
Design Speed (km/h)	Radius Of Curve	Notes:
50	250.0 Or Greater	(1) Shoulder Pavement is required on all curves meeting the criteria tabulated. For curves not meeting the criteria, shoulders are to be paved where erosion of the shoulder is evident or anticipated.
60	350.0 Or Greater	
80	435.0 Or Greater	
100	580.0 Or Greater	
105	580.0 Or Greater	(2) If outside shoulder is paved as designated bike line, the pave width within curves shall match the bike lane width.
110	875.0 Or Greater	

SHOULDER AND SLOPE TREATMENT FOR SUPERELEVATED ROADWAYS

SEEDING RATES (kg/ha) FOR NEW SHOULDERS AND SLOPES*								
TYPE OF SEED	ZONE I				ZONE II			
	COASTAL		INLAND		COASTAL		INLAND	
	Mar. to Nov.	Nov. to Mar.	Mar. to Oct.	Oct. to Mar.	Feb. to Dec.	Dec. to Feb.	Feb. to Dec.	Dec. to Feb.
PERMANENT GRASS								
Unhulled Bermuda	22	22	22	22	22	22	22	22
Bahia Argentina Or Pensacola			90	90			90	90
QUICK GROWING								
Brown Top Millet	22		22		22		22	
Annual Rye Grass		22		22		22		22
TOTAL KILOGRAMS PER HECTARE	44	44	134	134	44	44	134	134

Note: The seeding rates shown in this table apply only when seed is spread by an approved mechanical spreader meeting the requirements of Section 570 and 577 of the Standard Specifications.

*See Index No. 105 for zone boundaries and seeding rates for shoulder reworking.

GENERAL NOTES

1. Erosion control details are applicable to new construction, reconstruction and RRR projects. Project requirements for shoulder pavement and sodding that exceed the limits of this standard take precedence.
2. For sodding adjacent to ditches and at headwalls, see Index No. 281.
3. All front slopes steeper than 1:3 are to be sodded.

STATE OF FLORIDA DEPARTMENT OF TRANSPORTATION
ROAD DESIGN

EROSION CONTROL DETAILS FOR PERMANENT CONSTRUCTION

	Names	Dates	Approved By
Designed By	HLG	04/75	State Drainage Engineer
Drawn By			
Checked By	DCB	04/75	
F.H.W.A. Approved:		10/01/80	

Revision No.	Sheet No.	Index No.
94	1 of 1	104

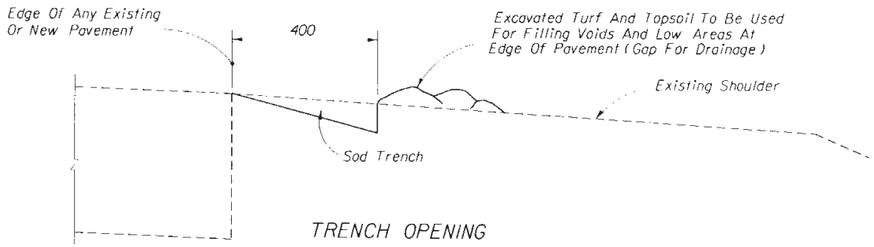

TRENCH OPENING

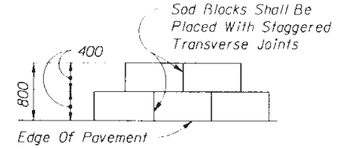

PLAN VIEW

PATTERN DETAIL

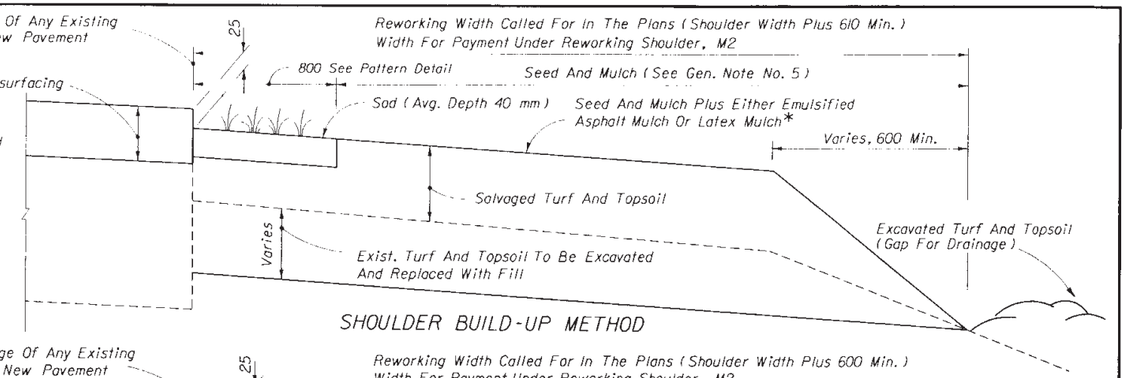

SHOULDER BUILD-UP METHOD

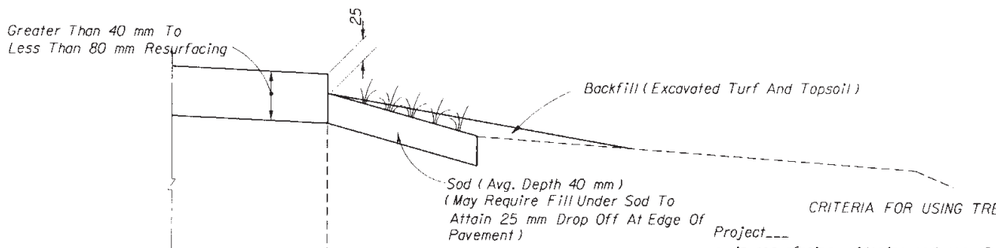

COMPLETED SHOULDER

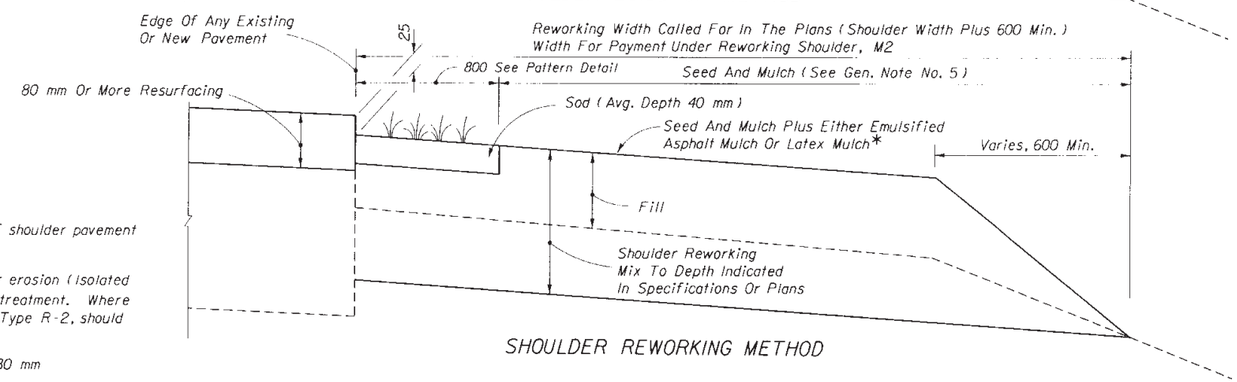

SHOULDER REWORKING METHOD

CRITERIA FOR USING TREATMENT TYPE R-1

Project___

- is resurfacing, widening and resurfacing or construction of shoulder pavement
- is rural or is urban without curb and gutter
- has good existing soil and turf with no significant shoulder erosion (isolated areas of significant erosion will require additional special treatment. Where poor soil and/or turf conditions exist shoulder reworking, Type R-2, should be applied.)
- resurfacing build-up is greater than 40 mm to less than 80 mm

TYPE R-1

*Emulsified Asphalt Mulch Or Latex Mulch May Be Deleted For Low Volume Roadways (ADT Less Than 1600) Or Where Shoulder Pavement Is Constructed.

CRITERIA FOR USING TREATMENT TYPE R-2

Project___

is resurfacing or construction of shoulder pavement
is rural or is urban without curb and gutter
has good existing soil and turf
resurfacing build-up is 80 mm or more

A SIMILAR TREATMENT MAY BE USED FOR PROJECTS THAT REQUIRE SHOULDER WIDENING. DETAILS ARE TO BE SHOWN IN THE PLANS.

TYPE R-2

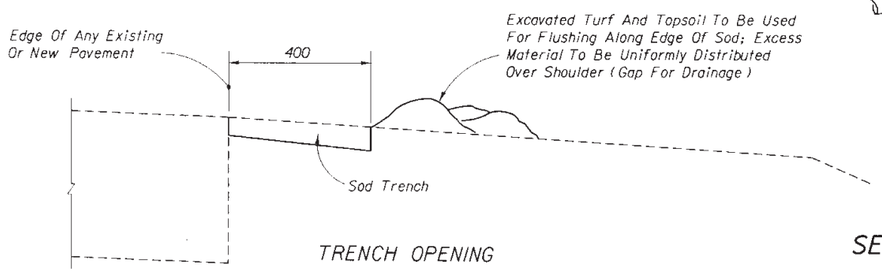

TRENCH OPENING

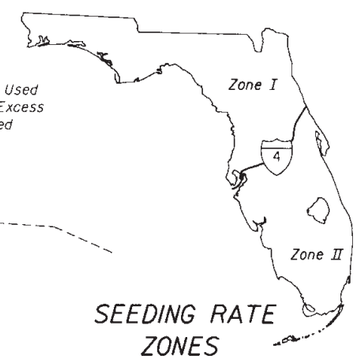

SEEDING RATE ZONES

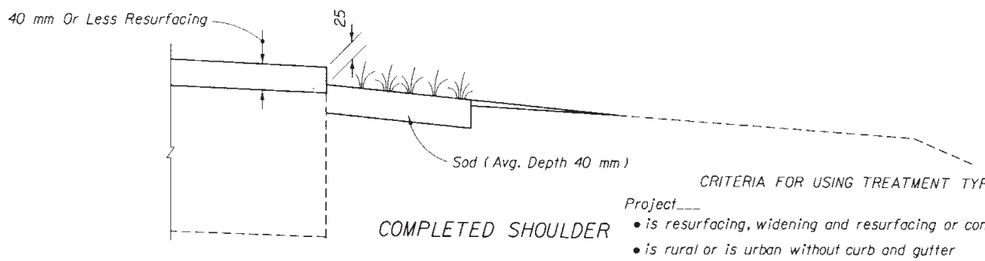

COMPLETED SHOULDER

CRITERIA FOR USING TREATMENT TYPE R-3

Project___

- is resurfacing, widening and resurfacing or construction of shldr. pavt.
- is rural or is urban without curb and gutter
- has good existing soil and turf with no significant shoulder erosion (isolated areas of significant erosion will require additional special treatment. Where poor soil and/or turf conditions exist shoulder reworking, Type R-2, should be applied.)
- resurfacing build-up is 40 mm or less

TYPE R-3

SEEDING RATES (kg/ha)

TYPE OF SEED	ZONE I				ZONE II			
	COASTAL		INLAND		COASTAL		INLAND	
	Mar. to Nov.	Nov. to Mar.	Mar. to Oct.	Oct. to Mar.	Feb. to Dec.	Dec. to Feb.	Feb. to Dec.	Dec. to Feb.
PERMANENT GRASS								
Unhulled Bermuda	17	17	11	17	17	17	11	17
Bahia Argentina Or Pensacola			34	34			34	34
QUICK GROWING								
Brown Top Millet	22		22		22		22	
Annual Rye Grass		22		22		22		22
TOTAL KILOGRAMS PER HEC.	39	39	67	73	39	39	67	73

Note: The seeding rates shown in this table apply only when seed is spread by an approved mechanical spreader meeting the requirements of Section 570 and 577 of the Standard Specifications.

GENERAL NOTES

1. Special attention is to be directed to the construction of the required 25 mm drop-off at edge of pavement.
2. Fertilize entire unpaved shoulder and front slope to toe of slope or bottom of ditch.
3. Topsoil obtained from borrow pits or other sources may be used in lieu of excavated turf and topsoil when economically feasible. No additional payment will be made for substituting topsoil for excavated turf or topsoil.
4. Payment for excavation of turf and topsoil and for backfill of this material under Types R-1 and R-3, is to be included in the contract unit price for Sodding, M2.
5. Payment for reworking shoulders, shall include the cost for those seeding and mulching operations within the limits for reworking shoulders. Materials (Seed, Mulch, Fertilizer and Water) and Sodding shall be paid for as separate items. Reworking shoulders shall be paid for under the contract unit price for Reworking Shoulders, M2.

STATE OF FLORIDA DEPARTMENT OF TRANSPORTATION
ROAD DESIGN

SHOULDER SODDING AND REWORKING ON EXISTING FACILITIES

	Names	Dates	Approved By
Designed By	EGR	09/07/84	A A McLemore, State Drainage Engineer
Drawn By	HSD	09/07/84	
Checked By	EGR	09/07/84	
F.H.W.A. Approved:		09/21/84	

Revision No.	Sheet No.	Index No.
94	1 of 1	105

STANDARD CRITERIA

CLASS	TYPE (1)	APPLICATION DESCRIPTION	STANDARD INDEX NO.	PERMEABILITY cm/sec	A. O. S. Range DIA. mm	GRAB TENSILE STRENGTH N	PUNCTURE N	TRAPEZOIDAL TEAR N	MULLEN BURST N/mm^2	ELONGATION %	SEAM STRENGTH N	U V RESISTANCE (Min. Allowed) %	U V RESISTANCE (Min. Allowed) Time (Hrs.)	FILTRATION EFFICIENCY %	FLOW RATE L^3/Min.	COMMENTS
DRAINAGE (D)	D-1	Revetment (Special)		1×10^{-2}	*0.425-0.212	1112	510	220	3.447	15-30	1000	80	500	—	—	Woven Monofilament only
	D-2	Revetment (Standard)		1×10^{-2}	*0.212-0.150	880	355	220	2.206	15-50	800	80	500	—	—	Woven Monofilament only
		Cyclopean Stone														
		Articulating Block														
		Gabions														
		Rock, Rubble, Broken Concrete	280													
	D-3	Underdrain Trench Wrap	286	1×10^{-2}	*0.212-0.150	400	200	155	0.965	50 (Min.)	360	80	150	—	—	When placed adjacent to temporary sheeting which will be removed, the filter fabric shall meet the requirements of D-2 fabric.
		French Drain	285													
		Sheet Piling Filter														
		Filter Fabric Jacket (Culvert)	280													
	D-4	Slope Pavement (Sand-Cement)		1×10^{-2}	*0.212-0.150	800	220	155	1.241	50 (Min.)	720	80	150	—	—	Non-Woven only Min. Thickness 90 Mils
		Ditch Pavement (Sand-Cement)	281													
	D-5	Mechanical Stabilized Retaining Wall		1×10^{-2}	*0.212-0.150	400	220	175	1.241	50 (Min.)	360	80	150	—	—	
		Cast-In-Place Retaining Wall														
	D-6	Slope Pavement (Concrete)		1×10^{-2}	*0.212-0.150	800	220	155	1.241	50 (Min.)	720	80	150	—	—	Non-Woven only Min. Thickness 120 Mils
		Ditch Pavement (Concrete)	281													
	D-7	Underdrain Filter Sock	286	—	*0.212-0.150	**220	—	—	0.689	—	—	—	—	—	—	See Standard Specification 948
EROSION (E)	E-1	Staked Silt Fence		1×10^{-2}	NA	400	—	155	1.241	15-40	360	80	500	75	1.136	
	E-2	Wind Screen	103	1×10^{-2}	NA	400	—	—	—	15-40	360	80	150	—	—	
STABILIZATION (R)	R-1	Reinforcement		1×10^{-3}	0.600	880	400	400	1.448-2.965	15-40	800	80	150	—	—	
	R-2	Separation		1×10^{-3}	0.600	800	355	220	1.999	15-40	720	—	—	—	—	

(1) Type refers to FDOT class and application. * See DESIGN NOTE No. 3 ** See TABLE 1 below

TABLE 1

Test	Unit	Test Method
Permeability	cm/sec	ASTM-D-4491
AOS	U.S. Sieve No.	ASTM-D-4751
Grab Tensile Strength	N	ASTM-D-4632
[**Ball Burst Test	N	ASTM-D-3787 (tested wet)]
Puncture	N	ASTM-D-4833
Trapezoidal Tear	N	ASTM-D-4533
Mullen Burst	N/mm^2	ASTM-D-3786
Elongation	%	ASTM-D-4632
Ultra Violet Resistance	% Retained in Strength	ASTM-D-4355
Filtration Efficiency	%	ASTM-D-5141
Flow Rate	L^3/min.	ASTM-D-5141

GENERAL NOTES

1. Specifications for geotextiles are Section 985 or the Section identified by the specific application. Physical criteria for each application is provided by this standard, in conjunction with those sections.
2. All values are MINIMUM AVERAGE ROLL values in the weakest principal direction unless otherwise stated.
3. Range of values do not preclude the responsibility to design the fabric to the insitu materials and conditions.
4. Unless specifically restricted in COMMENTS column, any type of material may be used.

DESIGN NOTES

1. The Designer shall review this criteria and adjust the values as necessary to satisfy project requirements. These adjustments shall be called for in the plans or contained in the project special provisions. (See design note 3.)
2. U V Resistance: The value represents the percent of minimum textile strength retained (ASTM-D-4632) after weathering per ASTM-D-4355 for the test period (hours).
3. A. O. S. Design Guide.
   Soil with ≥ 50% passing 0.075 mm sieve, A. O. S. Range is 0.150-0.106.
   Soil with ≥ 15% but < 50% passing 0.075 mm sieve, A. O. S. Range is 0.212-0.150.
   Soil with < 15% passing 0.075 mm sieve, A. O. S. Range is 0.425-0.212.

STATE OF FLORIDA DEPARTMENT OF TRANSPORTATION
ROAD DESIGN

GEOTEXTILE CRITERIA

	Names	Dates
Designed By	COMM	8/91
Drawn By	DLD	8/91
Checked By	KHH	8/91

Approved By 4a McLemore
State Drainage Engineer

Revision No.	Sheet No.	Index No.
94	1 of 1	199

F.H.W.A. Approved:

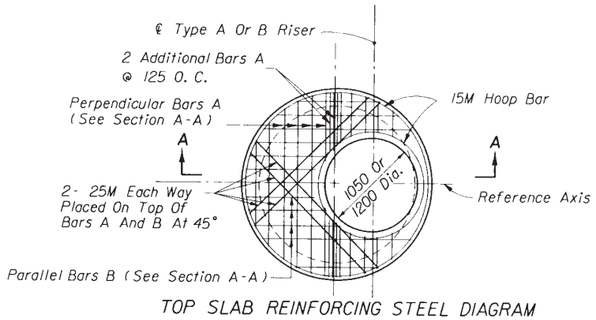

TOP SLAB REINFORCING STEEL DIAGRAM

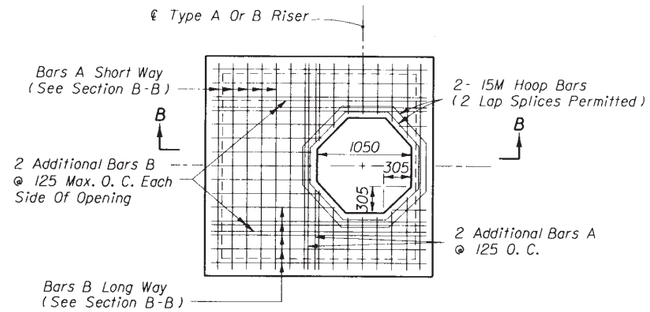

TOP SLAB REINFORCING STEEL DIAGRAM

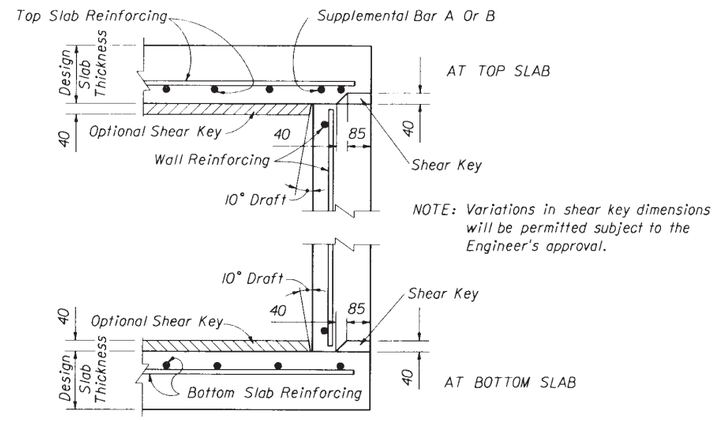

NOTE: Variations in shear key dimensions will be permitted subject to the Engineer's approval.

SLAB TO WALL DETAILS FOR PRECAST ALTERNATE WITH 203 WALLS

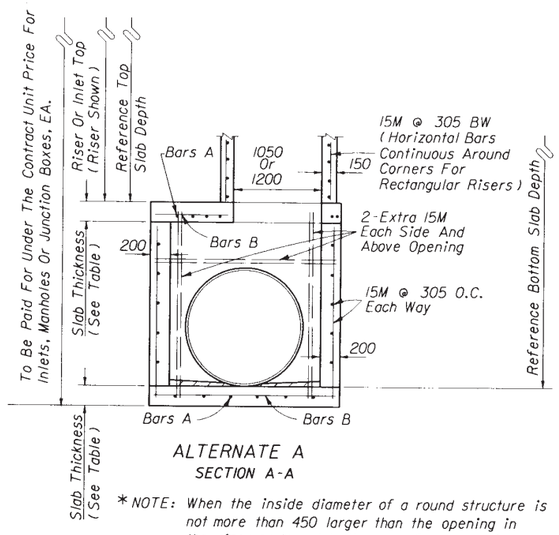

ALTERNATE A
SECTION A-A

* NOTE: When the inside diameter of a round structure is not more than 450 larger than the opening in the riser or top slab, the top of the structure or riser shall be constructed according to the "Special Top Slab" details on this sheet.

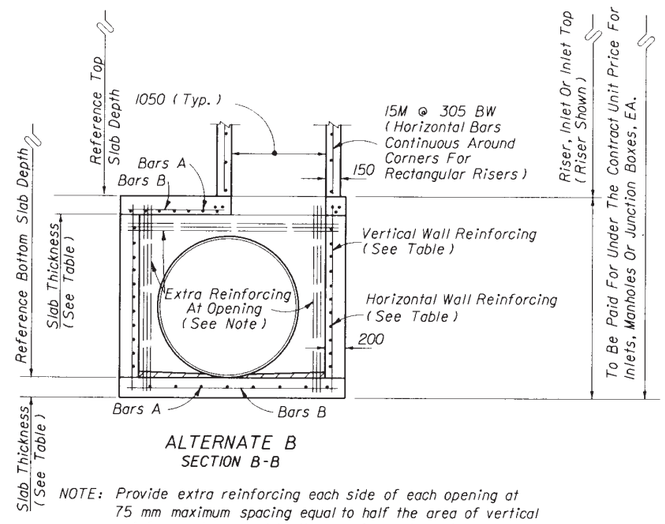

ALTERNATE B
SECTION B-B

NOTE: Provide extra reinforcing each side of each opening at 75 mm maximum spacing equal to half the area of vertical reinforcment removed by the opening and provide the same area of reinforcment above each opening at 75 mm maximum spacing as removed by the opening.

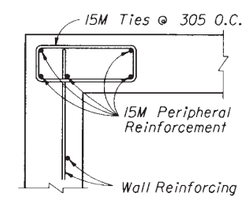

SECTION C-C

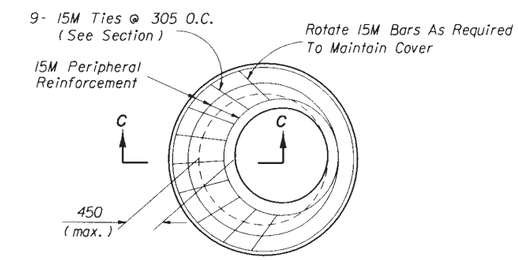

SPECIAL TOP SLAB *

GENERAL NOTES

1. Standard structure bottoms 1200 mm diameter and smaller (Alt. A) and 1050 mm square (Alt. B) are designated Type P. Larger standard structure bottoms are designated Type J. Risers are permitted for all structures.
2. Walls of circular structures (Alternate A) constructed in place may be of non-reinforced concrete or brick or reinforced concrete. Precast and rectangular structures (Alternate B) shall be constructed of reinforced concrete only.
3. Wall thickness and reinforcement are for either reinforced cast-in-place or precast concrete units except that precast circular units may be furnished with walls in accordance with either A.S.T.M. C-478 (up to 2400 mm diameter) or A.S.T.M. C-76, Class III, B Wall, modified where the elliptical steel cage area is placed in the center one-third of the wall.
4. Top and floor slab thickness and reinforcement are for precast and cast in place construction. Top and floor slabs shall be of Class II concrete. Concrete as specified in A.S.T.M. C-478 (27 579 kPa) may be used in lieu of Class I and Class II concrete in precast items manufactured in plants which are under the 'Standard Operating Procedures' for the inspection of precast drainage products.
5. All reinforcement shall be A.S.T.M. A615, 400 MPa or 450 MPa welded wire fabric, either smooth or deformed.
6. Structure bottoms may be used in conjunction with curb inlet tops Types 1, 2, 3, 4, 5, 6, 9, and 10, and any manhole or junction box unless otherwise shown in the plans or other standard drawings. Alt. B structure bottoms may be used in conjunction with curb inlet Types 7 & 8, or any ditch bottom inlet unless otherwise shown in the plans or other standard drawings.
7. Rectangular structures may be rotated as directed by the Engineer in order to facilitate connections between the structure walls and storm sewer pipes.
8. Except when ACI hooks are specifically required, reinforcement top and slab shall be straight embedment.
9. All steel bars shall have 40 mm minimum cover unless otherwise shown except for precast circular units manufactured under ASTM C-76 or ASTM C-478. Horizontal steel in rectangular structures shall be lapped a minimum of 24 bar diameters at corners.
10. The corner fillets shown are necessary for rectangular structures used with circular risers and inlet throats and used on skew with rectangular risers, inlet and inlet throats. Fillets will be required in lieu of the bottom slab of the Alt. B riser when used with the Alt. A box. Each fillet shall be reinforced with 2-15M bars.
11. Inlet throats, riser or manhole tops shall be secured to structures as shown on Index No. 201.
12. Structures with depths over 4.25 m are to be checked for floatation by designer of project drainage.
13. Units larger than specified standard may be substituted at the contractor's option when these units will not cause or increase the severity of utility conflicts. Such larger units shall be furnished at no additional cost to the Department. Larger Alternate A units cannot replace Alternate B units without approval of the Engineer. This note applies to this Index only.
14. For manhole and junction box tops, for frames and covers, and, for supplementary details see Index No. 201.

STATE OF FLORIDA DEPARTMENT OF TRANSPORTATION
ROAD DESIGN

STRUCTURE BOTTOMS TYPE J AND P

	Names	Dates	Approved By S. A. McLemore, State Drainage Engineer		
Designed By					
Drawn By					
Checked By			Revision No.	Sheet No.	Index No.
F.H.W.A. Approved:		05/01/75	94	1 of 2	200

SLAB DESIGNS - SQUARE AND RECTANGULAR STRUCTURES

(ALL SLABS 200 THICK - REINFORCING PARALLEL TO SHORT WAY AND LONG WAY)

SHORT-WAY		LONG-WAY	
SLAB DEPTH	SCHEDULE	SLAB DEPTH	SCHEDULE
SIZE: 1067 x UNLIMITED (1050 x UNLIMITED)			
≥0.15 <8.85	B	≥0.15-12.20	B
8.85-12.20	C		
SIZE: 1219 x UNLIMITED (1200 x UNLIMITED)			
≥0.15 <5.80	B	≥0.15 <10.35	B
5.80 <8.85	C	10.35-12.20	C
8.85-12.20	D		
SIZE: 1524 x 1524 (1500 x 1500)			
≥0.15 <0.90	C	≥0.15 <0.90	C
0.90 <5.80	B	0.90 <5.80	B
5.80 <8.55	C	5.80 <8.55	C
8.55 <11.60	D	8.55 <11.60	D
11.60-12.20	F	11.60-12.20	F
SIZE: 1524 x 1829 (1500 x 1800)			
≥0.15 <0.90	C	≥0.15 <0.90	C
0.90 <4.90	B	0.90 <6.10	B
4.90 <7.30	C	6.10 <8.85	C
7.30 <10.35	D	8.85-12.20	D
10.35-12.20	F		
SIZE: 1524 x 2134 (1500 x 2100)			
≥0.15 <0.90	C	≥0.15 <0.90	C
0.90 <4.25	B	0.90 <6.70	B
4.25 <6.40	C	6.70 <10.05	C
6.40 <11.90	D	10.05-12.20	D
11.90-12.20	F		
SIZE: 1524 x 2438 (1500 x 2400)			
≥0.15 <0.90	C	≥0.15 <11.90	B
0.90 <2.45	B	11.90-12.20	C
2.45 <5.20	C		
5.20 <7.00	D		
7.00-12.20	F		
SIZE: 1524 x 2743 (1500 x 2700)			
≥0.15 <0.90	C	≥0.15 <9.75	B
0.90 <2.45	B	9.75-12.20	C
2.45 <5.20	C		
5.20 <7.00	D		
7.00-12.20	F		

SHORT-WAY		LONG-WAY	
SLAB DEPTH	SCHEDULE	SLAB DEPTH	SCHEDULE
SIZE: 1829 x 1829 (1800 x 1800)			
≥0.15 <0.90	D	≥0.15 <0.90	D
0.90 <1.20	C	0.90 <1.20	C
1.20 <4.25	B	1.20 <4.25	B
4.27 <6.40	C	4.27 <6.40	C
6.40 <8.55	D	6.40 <8.55	D
8.55-12.20	F	8.55-12.20	F
SIZE: 1829 x 2134 (1800 x 2100)			
≥0.15 <0.90	D	≥0.15 <0.90	D
0.90 <1.20	C	0.90 <1.20	C
1.20 <3.65	B	1.20 <4.55	B
3.65 <5.80	C	4.55 <6.40	C
5.80 <7.90	D	6.40 <9.15	D
7.90-12.20	F	9.15-12.20	F
SIZE: 1829 x 2438 (1800 x 2400)			
≥0.15 <0.90	D	≥0.15 <0.90	D
0.90 <1.20	C	0.90 <1.20	C
1.20 <2.15	B	1.20 <4.90	B
2.15 <4.90	C	4.90 <7.00	C
4.90 <7.00	D	7.00 <9.75	D
7.00-12.20	F	9.75-12.20	F
SIZE: 1829 x 2743 (1800 x 2700)			
≥0.15 <0.90	D	≥0.15 <0.90	D
0.90 <4.55	C	0.90 <1.20	C
4.55 <6.40	D	1.20 <5.50	B
6.40 <8.25	E	5.50 <8.25	C
8.25-12.20	G	8.25 <11.30	D
		11.30-12.20	E
SIZE: 2134 x 2134 (2100 x 2100)			
≥0.15 <0.90	E	≥0.15 <0.90	E
0.90 <1.20	D	0.90 <1.20	D
1.20 <4.90	C	1.20 <4.90	C
4.90 <6.70	D	4.90 <6.70	D
6.70 <8.55	E	6.70 <8.55	E
8.55-12.20	G	8.55-12.20	G
SIZE: 2134 x 2438 (2100 x 2400)			
≥0.15 <0.90	E	≥0.15 <0.90	E
0.90 <1.20	D	0.90 <1.20	D
1.20 <4.55	C	1.20 <5.20	C
4.55 <6.40	D	5.20 <7.00	D
6.40 <8.25	E	7.00 <8.85	E
8.25-12.20	G	8.85-12.20	G
SIZE: 2134 x 2743 (2100 x 2700)			
≥0.15 <0.90	E	≥0.15 <0.90	E
0.90 <1.20	D	0.90 <1.20	D
1.20 <3.65	C	1.20 <5.50	C
3.65 <5.50	D	5.50 <7.30	D
5.50 <7.30	E	7.30 <9.75	E
7.30-12.20	G	9.75-12.20	G

SHORT-WAY		LONG-WAY	
SLAB DEPTH	SCHEDULE	SLAB DEPTH	SCHEDULE
SIZE: 2438 x 2438 (2400 x 2400)			
≥0.15 <0.90	D	≥0.15 <0.90	D
0.90 <1.20	C	0.90 <1.20	C
1.20 <2.75	B	1.20 <2.75	B
2.75 <5.20	C	2.75 <5.20	C
5.20 <9.45	D	5.20 <9.45	D
9.45-12.20	G	9.45-12.20	G
SIZE: 2438 x 2743 (2400 x 2700)			
≥0.15 <0.90	D	≥0.15 <0.90	E
0.90 <1.20	C	0.90 <1.20	D
1.20 <4.90	B	1.20 <5.50	C
4.90 <6.70	C	5.50 <7.60	D
6.70 <8.85	D	7.60 <9.75	F
8.85-12.20	F	9.75-12.20	G
SIZE: 2743 x 2743 (2700 x 2700)			
≥0.15 <0.90	F	≥0.15 <0.90	F
0.90 <4.25	C	0.90 <4.25	C
4.25 <6.10	D	4.25 <6.10	D
6.10 <7.90	E	6.10 <7.90	E
7.90-12.20	G	7.90-12.20	G

WALL DESIGNS - RECTANGULAR STRUCTURES

VERTICAL REINFORCING		HORIZONTAL REINFORCING	
WALL DEPTH	SCHEDULE	WALL DEPTH	SCHEDULE
SIZE: 1067 (1050) * SEE NOTE BELOW			
≥0.35-12.20	A	≥0.35-12.20	B
SIZE: 1219 (1200)			
≥0.35-12.20	A	≥0.35-12.20	B
SIZE: 1524 (1500)			
≥0.35-12.20	A	≥0.35 <10.05	B
		10.05-12.20	C
SIZE: 1829 (1800)			
≥0.35-12.20	A	≥0.35 <6.70	B
		6.70-12.20	C
SIZE: 2134 (1200)			
≥0.35-12.20	A	≥0.35 <4.55	B
		4.55 <7.60	C
		7.60-12.20	D
SIZE: 2438 (2400)			
≥0.35-12.20	A	≥0.35 <3.35	B
		3.35 <5.80	C
		5.80 <8.85	D
		8.85-12.20	F
SIZE: 2743 (2700)			
≥0.35-12.20	A	≥0.35 <4.55	C
		4.55 <6.70	D
		6.70-12.20	F

SIZE is the inside length of a structure wall.

* Precast structures 1067 x 1067 may be cast with 150 walls to depths of 4.55 meters. See Index 201

SLAB DESIGNS - ROUND STRUCTURES

SLAB DEPTH	SLAB THICKNESS	REINFORCING (2 WAYS) SCHEDULE
SIZE: 1067 (1050)		
≥0.15-12.20	200	C
SIZE: 1219 (1200)		
≥0.15-12.20	200	C
SIZE: 1524 (1500)		
≥0.15 <9.15	200	C
9.15-12.20	200	D
SIZE: 1829 (1800)		
≥0.15 <2.45	200	B
2.45 <5.50	200	C
5.50 <9.10	200	D
9.10 <11.30	200	E
11.30-12.30	200	G
SIZE: 2438 (2400)		
≥0.15 <2.75	250	C
2.75 <4.55	250	D
4.55 <7.00	250	E
7.00 <10.05	300	E
10.05-12.20	300	G
SIZE: 3048 (3000)		
≥0.15 <1.85	250	C
1.85 <3.35	250	D
3.35 <5.20	250	E
5.20 <7.00	300	E
7.00-12.20	300	G
SIZE: 3658 (3600)		
≥0.15 <1.85	300	C
1.85 <3.35	300	D
3.35 <4.90	300	E
4.90 <6.10	350	E
6.10-12.20	350	G

GENERAL NOTES

1. Slab reinforcement is appropriate for top, intermediate, and bottom slabs.
2. Slab depth is measured from finished grade to top of slab.
3. Wall design depth is measured to the top of the bottom slab for boxes and to the top of the intermediate slab for risers.
4. Wall height is the distance between top of lower slab to bottom of upper slab.
5. Size shown in parenthesis ( ) is the nominal size as shown on the plans.

REINFORCING SCHEDULE

SCHEDULE	400 MPa STEEL OR 450 MPa (WIRE FABRIC) mm^2/m
A	420
B	505
C	780
D	1120
E	1545
F	2240
G	3070

STATE OF FLORIDA DEPARTMENT OF TRANSPORTATION
ROAD DESIGN

STRUCTURE BOTTOMS TYPE J AND P

	Names	Dates
Designed By		
Drawn By	dds	05/86
Checked By	JBW	05/86
F.H.W.A. Approved:		11/07/86

Approved By S. A. McLeaure
State Drainage Engineer

Revision No.	Sheet No.	Index No.
94	2 of 2	200

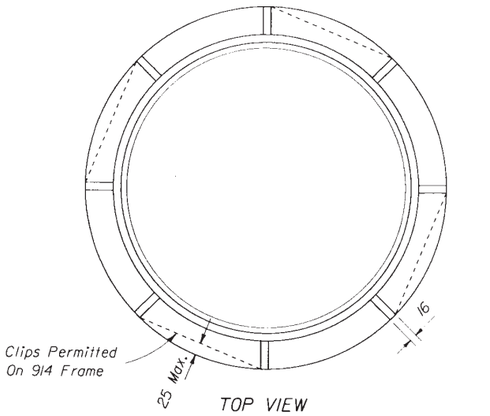

SECTION

TYPE I

For Manholes

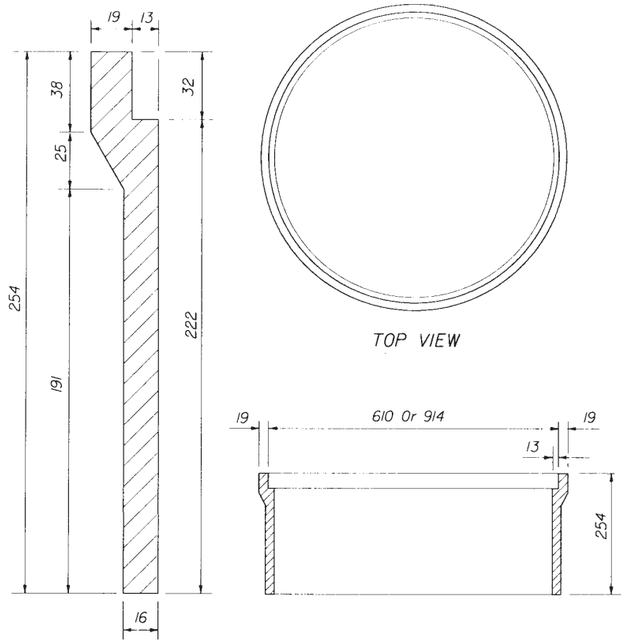

WALL SECTION SECTION

TYPE II

For Curb Inlets Types 1, 2, 3, & 4

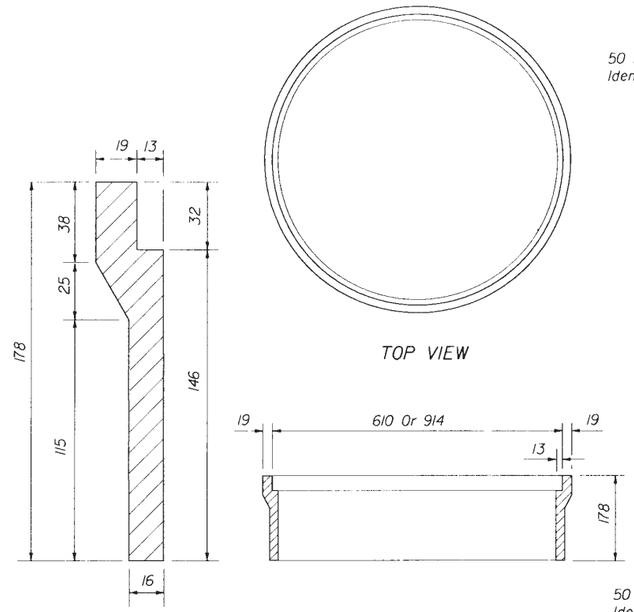

WALL SECTION SECTION

TYPE III

For Curb Inlets Types 7 & 8

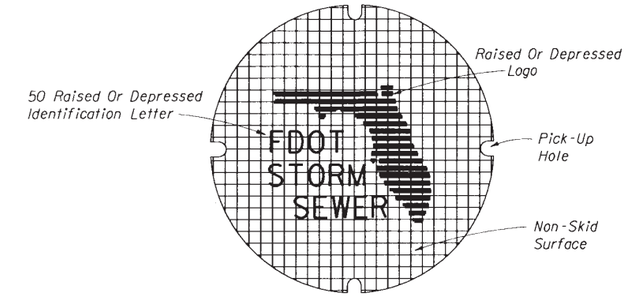

TOP VIEW

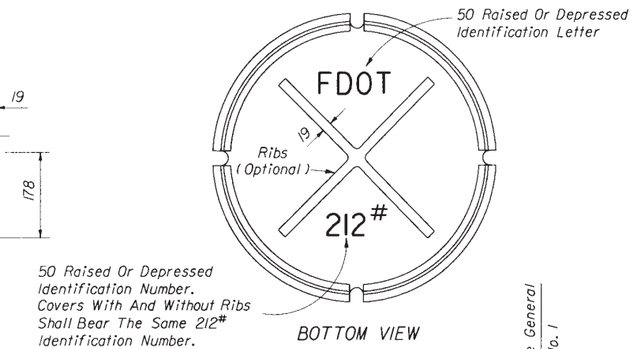

BOTTOM VIEW

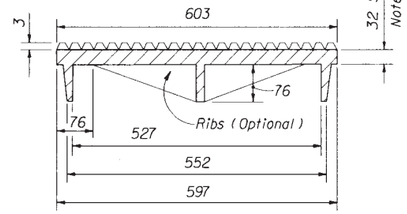

SECTION

COVER FOR ALL FRAMES

WEIGHT OF CASTINGS						
Frame Type	610 OPENING		915 OPENING			
	Frame	Cover (Std.)	Frame	2-Piece Cover		
				Inside	Outside	Total
I	70 kg	85 kg	100 kg	85 kg	100 kg	185 kg
II	65 kg	85 kg	115 kg	85 kg	100 kg	185 kg
III	40 kg	85 kg	80 kg	85 kg	100 kg	185 kg

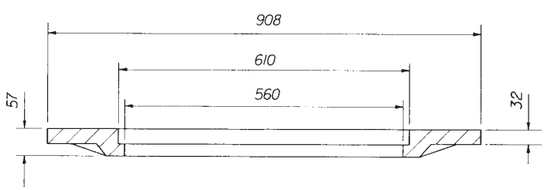

2-PIECE COVER

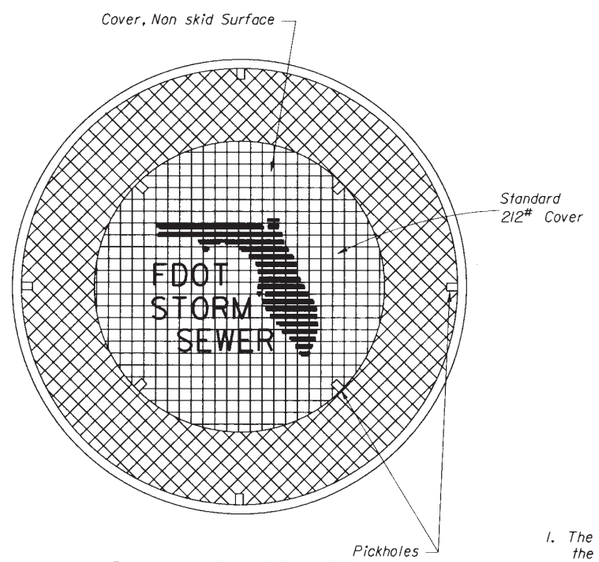

For Use With Types I, II And III Frames
With 914 mm Opening

2-PIECE COVER

CAST IRON FRAMES

NOTES (FRAMES, AND COVER)

1. The 212# cover is to be used for all frames Types I, II, III and the 2-Piece Cover, and is the replacement cover for all previous frames with 38 mm deep seats (traffic type). The 80 kg cover (non-traffic type), 1984 Roadway and Traffic Design Standards Index No. 201, is the replacement cover for existing frames with 13 mm deep seats. Installation of frames with 13 mm deep seats is not permitted. The 80 kg covers are to be placed in existing 13 mm deep seated frames only when specifically called for in the plans or as specifically directed by the Engineer.

STATE OF FLORIDA DEPARTMENT OF TRANSPORTATION
ROAD DESIGN

SUPPLEMENTARY DETAILS FOR MANHOLES AND INLETS

	Names	Dates
Designed By		
Drawn By	HSD	06/82
Checked By	JBW	06/82
F.H.W.A. Approved:		09/23/82

Approved By S. R. McLemore
State Drainage Engineer

Revision No.	Sheet No.	Index No.
94	1 of 6	201

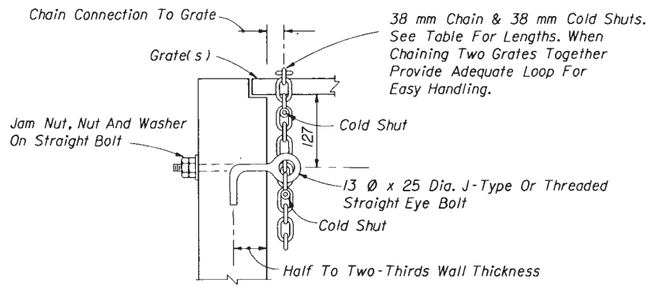

Note: When Alternate G grate is specified, the chain, bolt, nuts, washer and cold shuts shall be galvanized in accordance with the specifications for the grate.

Cost of eye bolt and chain to be included in the contract unit price for inlets.

EYE BOLT AND CHAIN REQUIREMENTS				
Index Number	Inlet Type	Eye Bolts	Length Of Chain(mm)	Handling & Remarks
217	(MB) 1	1	1220	Slide & Spin
	(MB) 2	1	1220	Slide & Spin
	(MB) 3	2	2 @ 1220	Slide & Spin
	(MB) 4	2	2 @ 1220	Slide & Spin
	(MB) 5	2	2 @ 1220	Slide & Spin
218	(BW)	1	1118	Slide Or Slide & Spin
219	(BW, RGD)	1	1220	Slide & Spin
220	S	1	1220	Slide & Spin
221	V	1	1220	Slide & Spin
230	A	1	915	Slide
231	B	1	1520	Slide & Spin
232	C	1	760	Slide & Spin
	D	1	760	Slide & Spin
	E	2	2 @ 760	Slide & Spin
	H	2	2 @ 760	Flip Ctr. Grate and Slide & Spin Single Free Grate
			1 @ 450	Ctr. Grate To One End Grate
233	F	1	1065	Flip Or Slide & Spin
	G	1	1830	Slide
			610	Lifting Loop
234	J	1	1220	Slide & Spin

EYE BOLT AND CHAIN FOR LOCKING GRATES TO INLETS

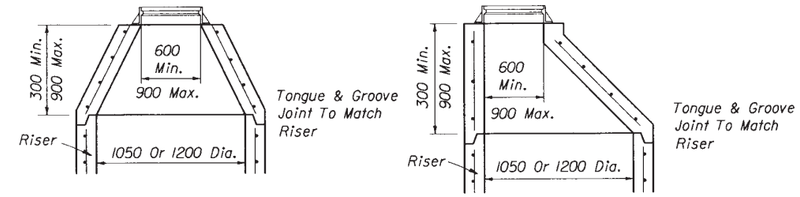

PRECAST CONCENTRIC CONE

PRECAST ECCENTRIC CONE

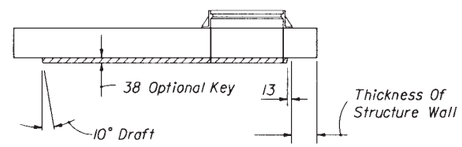

SECTION

Note: See Slab Designs Index 200.

TYPE 7

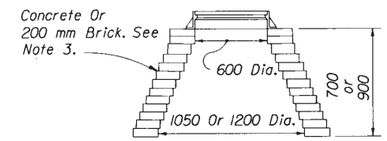

BRICK OR CONCRETE

TYPE 8

MANHOLES

MANHOLE TOPS

NOTES (TOPS)

1. Manhole top Type 7 slabs shall be of Class II concrete. Concrete as specified in ASTM C-478 may be used for precast units; see General Note No. 3.
2. Manhole top Type 7 slabs may be of cast-in-place or precast construction. The optional key is for precast tops and in lieu of dowels. Frame and slab openings are to be omitted when top is used over a junction box. Frames can be adjusted with from one to six courses of brick.
3. Manhole top Type 8 may be of cast-in-place or precast concrete construction or brick construction. For concrete construction, the concrete and steel reinforcement shall be the same as the supporting wall unit. An eccentric cone may be used.
4. Manhole tops shall be secured to structures by optional construction joints as shown on Sheet 3 of 6.

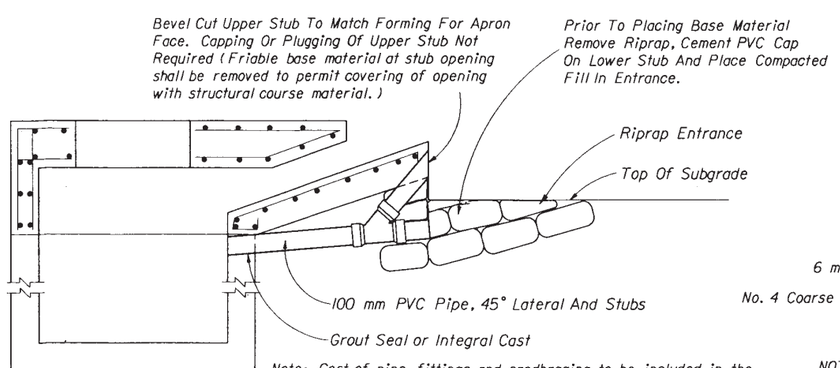

Note: Cost of pipe, fittings and sandbagging to be included in the contract unit price for inlets. See Index No. 102 for bale barrier protection at inlet.

TEMPORARY DRAINS FOR SUBGRADE AND BASE

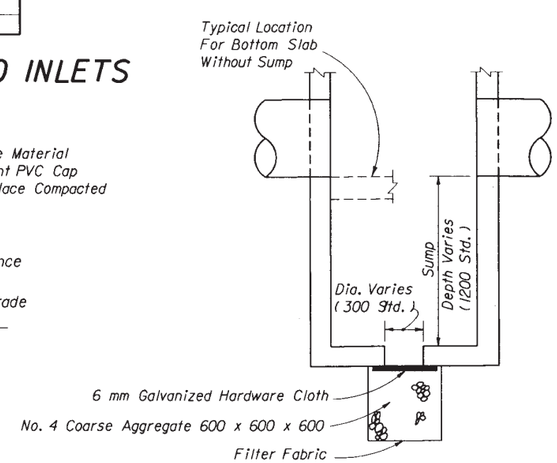

NOTE: Sump bottom appropriate for all manhole and inlet types. Cost for sump bottom to be included in the contract unit price for inlet or manhole.

SUMP BOTTOM

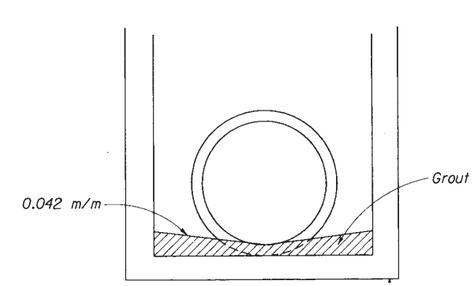

Note: Grout to consist of 3: 1 Sand-Cement Mixture or any Class Concrete. FOR ALL STRUCTURES UNLESS EXCLUDED BY SPECIAL DETAIL

DRAINAGE STRUCTURE INVERT

STATE OF FLORIDA DEPARTMENT OF TRANSPORTATION
ROAD DESIGN

SUPPLEMENTARY DETAILS FOR MANHOLES AND INLETS

	Names	Dates	Approved By		
Designed By	HLB	04/75	S. A. McLemore, State Drainage Engineer		
Drawn By					
Checked By	LMF	04/75	Revision No.	Sheet No.	Index No.
F.H.W.A. Approved:		10/07/80	94	2 of 6	201

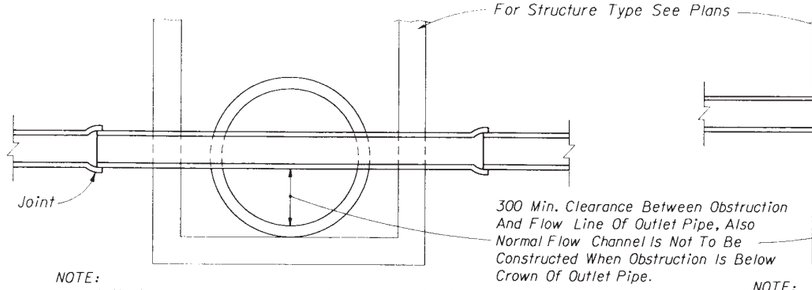

NOTE:
1. No joints allowed inside the Condition I structure.

CONDITION I

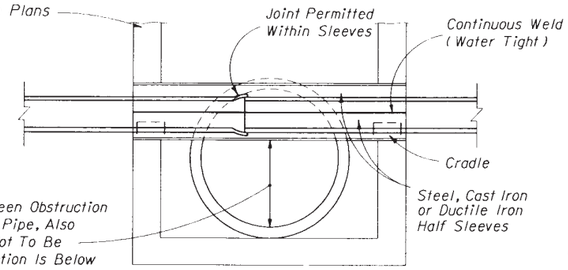

NOTE:
1. Only water mains will be allowed to pass through a Condition II structure.

CONDITION II

DESIGNERS NOTE

"Sumped" conflict manholes shall not be used unless the system is hydraulically designed to take in account the headloss generated if the sump is completely blocked. "Sumped" conflict manholes must be larger than those normally provided.

UTILITY PIPES THRU STORM SEWER STRUCTURES

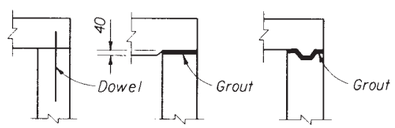

TOP SLABS TO WALLS

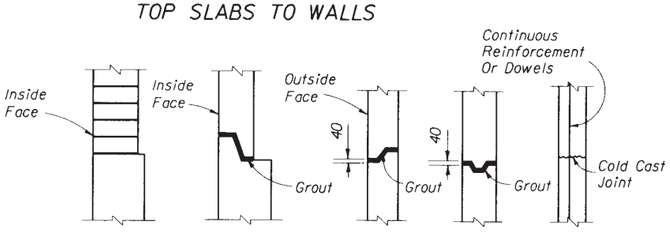

WALL JOINTS

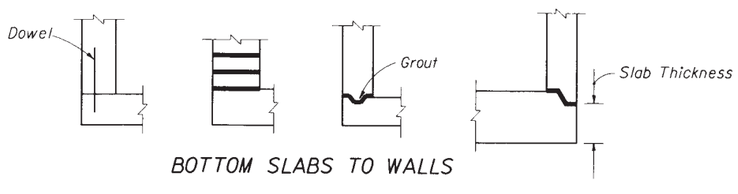

BOTTOM SLABS TO WALLS

1. One or more types of joints may be used in a single structure, except brick wall structure. Brick wall construction is permitted on circular units only.
2. All grouted joints are to have a maximum thickness of 25 mm.
3. Keyways are to be a minimum of 40 mm deep.
4. Joint dowels are to be 15M bars, 300 mm long with a minimum of 6 bars per joint for circular structures approximately evenly spaced, and, 2 bars per side at approximate quarter points for rectangular structures.
5. Minimum cover on reinforcing bars is 40 mm.
6. Joints between wall segments and between wall segments and top or bottom slabs may be sealed either by preformed plastic gasket material using the procedures given in Section 430-7.3 or by grout.
7. Approved product inserts may be used in lieu of dowel embedment.

OPTIONAL CONSTRUCTION JOINTS

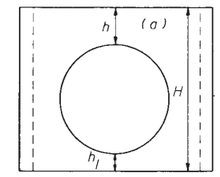

When	Then (Req'd)
$h_1 < 0.75h$ (min.)	$h \geq 0.4H$
$h_1 \geq 0.75h$ (min.)	$h \geq h$ (min.)

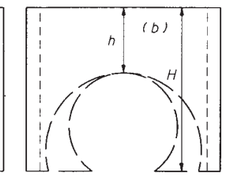

h = 0.4H

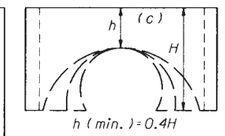

h (min.) = 0.4H

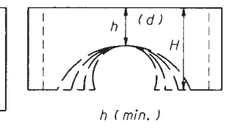

h (min.)

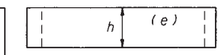

H = h (min.)

Segments (b), (c), & (d) may be inverted for use as a bottom segment in conjunction with a separately cast bottom slab. Maximum opening for pipe shall be the pipe O.D. plus 150.

Minimum Value For h	
h (min.)	Box Or Riser Diameter
300	1050 & 1200
450	1500 & 1800
600	>1800

TOP OR BOTTOM SEGMENTS WITH CONSTRUCTION JOINTS OTHER THAN DOWEL OPTION

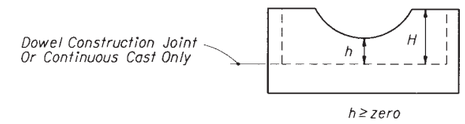

$h \geq$ zero

$H \geq h$

(Minimums Tabulated Above Do Not Apply)

TOP OR BOTTOM SEGMENT FOR DOWEL CONSTRUCTION JOINTS OR CONTINUOUS CAST SEGMENTS

COMPARATIVE SIDE VIEWS

MINIMUM DIMENSIONS FOR BOX AND RISER SEGMENTS

GENERAL NOTES

1. For square or rectangular precast drainage structures, either deformed or smooth welded wire fabric may be used provided:
   a) The smooth welded wire fabric shall comply with ASTM A-185, and deformed welded wire fabric shall comply with ASTM A-497.
   b) Width and length of the unit is four times the spacing of the cross wires.
   c) Wire fabric shall be continuous around the box, spliced at quarter point(s) with overlap of not less than the spacing of the cross wires plus 50 mm.
2. For equivalent steel areas for precast drainage structures, see Sheet 4 of 6.
3. Horizontal steel in the walls of rectangular structures shall be lapped a minimum of 24 bar diameter at corners.
4. Welding of splices and laps is permitted. The requirements and restrictions placed on welding in AASHTO M-259 shall apply.
5. Rebar straight end embeddment or peripheral reinforcement may be used in lieu of ACI standard hooks for top and bottom slabs except when hooks are specifically called for in plans or standard drawings.
6. Concrete as specified in ASTM C-478, (27579 kPa) may be used in lieu of Class I and Class II concrete in precast items manufactured in plants which are under the 'Standard Operating Procedures For The Inspection Of Precast Drainage Products'.
7. Maximum opening for pipe shall be the pipe o.d. plus 150 mm. Mortar used to seal the pipe into the opening will be of such a mix that shrinkage will not cause leakage into or out of the structure.
8. For pay item purposes, the height used to determine if a drainage structure is less than or greater than 3.0 m shall be computed using (a) the elevation of the top of the manhole lid, (b) the grate elevation or the theoretical gutter grade elevation of an inlet, or (c) the outside top elevation of a junction box less the flow line elevation of the lowest pipe or to top of sump floor.

STATE OF FLORIDA DEPARTMENT OF TRANSPORTATION
ROAD DESIGN

SUPPLEMENTARY DETAILS FOR MANHOLES AND INLETS

	Names	Dates	Approved By
Designed By	HLB	04/75	State Drainage Engineer
Drawn By			
Checked By	LMF	04/75	
F.H.W.A. Approved:		10/07/80	

Revision No.	Sheet No.	Index No.
94	3 of 6	201

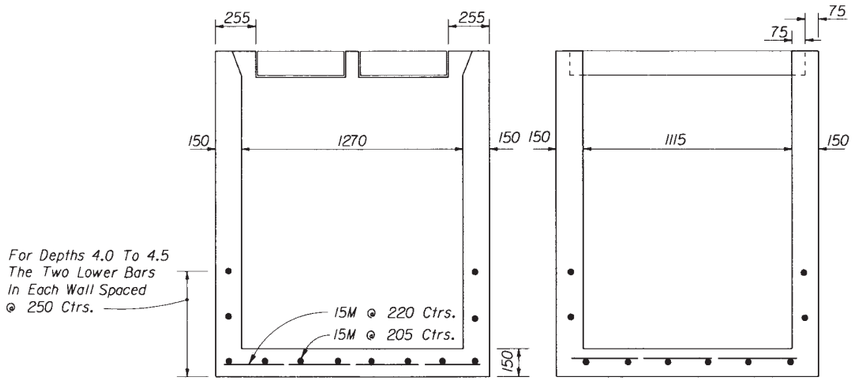

PARTIAL SECTION AA PARTIAL SECTION BB

DITCH BOTTOM INLET TYPE B

INDEX 231

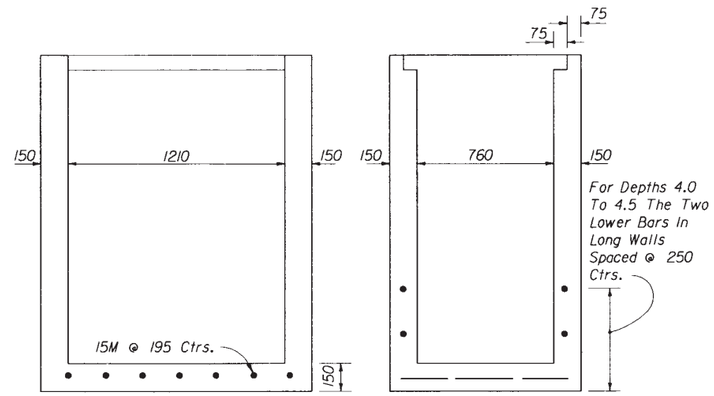

PARTIAL SECTION AA PARTIAL SECTION BB

DITCH BOTTOM INLET TYPE F

INDEX 233

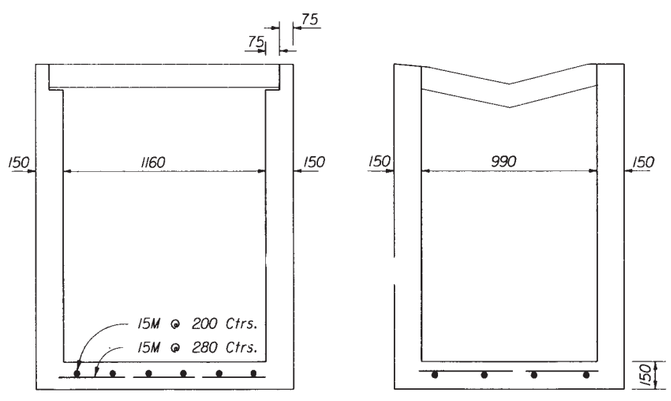

PARTIAL SECTION AA PARTIAL SECTION BB

GUTTER INLET TYPE S

INDEX 220

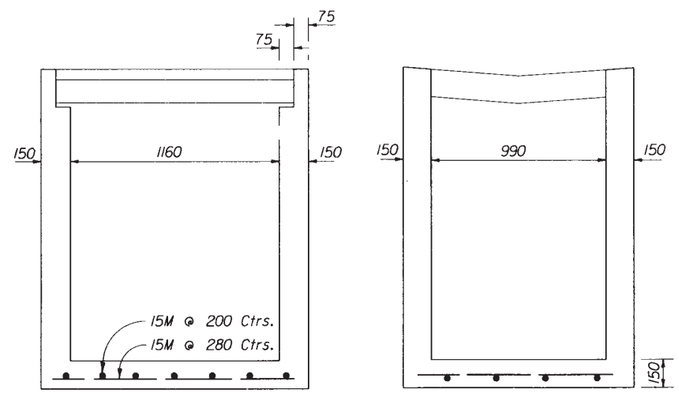

PARTIAL SECTION AA PARTIAL SECTION BB

GUTTER INLET TYPE J & V

INDEX 221 & 234

NOTES FOR THIN-WALL PRECAST OPTIONS

1. The details on Sheets 4, 5 & 6 are optional for precast inlet construction up to depths of 4.5M. These inlets can be used with Alt. "B" Bottoms, Index 200. Cast-in-place construction must adhere to the details contained on the referenced indexes.

2. Only the dimensions and reinforcement changes or other modifications are indicated. For all other dimensions and details, the referenced index drawings apply. When these precast units are used inconjunction with Alt "B" Structure Bottoms, Index 200, the interior dimensions of an Alt. "B" Bottom can be adjusted to reflect these inlet interior dimensions.

3. Concrete which meets the requirements of ASTM C-478 shall be used for structures constructed to these details.

4. Reinforcement can be either deformed bar reinforcement or welded wire fabric. Bar reinforcement other than 300 MPa may be used, however only two grades are recognized; 300 MPa and 400 MPa. Welded wire fabric, including deformed welded wire fabric, will be recognized as having a design strength of 450 MPa. The area of reinforcement required may be reduced in accordance with the Equivalent Steel Area Table provided. For bars and spacings not given, the steel area required can be determined by the following equations:

$$\text{400 MPa Steel Area} = A_{s\,400} = \frac{300\ MPa}{400\ MPa} \times A_{s\,300\ MPa}$$

$$\text{Welded Wire Fabric Steel Area} = A_{s\,400} = \frac{300\ MPa}{450\ MPa} \times A_{s\,300\ MPa}$$

In no case will fabric with wires smaller than W3.1 or spacings greater than 200 mm be permitted. Bar reinforcement shall show the minimum yield designation grade mark of either the number 400 or one (1) grade mark line to be acceptable at the higher value. Maximum bar spacing shall not be greater than two (2) times the slab thickness with a maximum spacing of 300 mm or three (3) times the wall thickness, with a maximum spacing of 455 mm.

EQUIVALENT STEEL AREA TABLE

300 MPa REINFORCING BAR		EQUIVALENT 400 MPa REINFORCING BAR		EQUIVALENT 450 MPa WELDED WIRE FABRIC	
Bar Size & Spacing	Steel Area	Bar Size & Spacing	Min. Steel Area	Style Designation	Min. Steel Area
15M @ 300 CCEW	130	10M @ 240 CCEW	85	75 x 75 - W3.1 x W3.1 or 100 x 100 - W4.5 x W4.5 or 150 x 150 - W6.5 x W6.5	80
15M @ 230 CCEW	170	15M @ 345 CCEW or 10M @ 180 CCEW	115	75 x 75 - W4.5 x W4.5 or 100 x 100 - W5.5 x W5.5 or 150 x 150 - W8.5 x W8.5	105
20M @ 150 CCEW	570	15M @ 150 CCEW or 20M @ 230 CCEW	380	100 x 100 - W20 x W20 or 150 x 150 - W30 x W30	350
25M @ 150 CCEW	775	20M @ 165 CCEW or 25M @ 230 CCEW	515	100 x 100 - W26 x W26	475

STATE OF FLORIDA DEPARTMENT OF TRANSPORTATION
ROAD DESIGN

SUPPLEMENTARY DETAILS FOR MANHOLES AND INLETS

	Names	Dates
Designed By	EGR/JGW	09/86
Drawn By	WPH/dds	09/86
Checked By	EGR	09/86
F.H.W.A. Approved:		11/07/86

Approved By S.A. McGenore
State Drainage Engineer

Revision No.	Sheet No.	Index No.
94	4 of 6	201

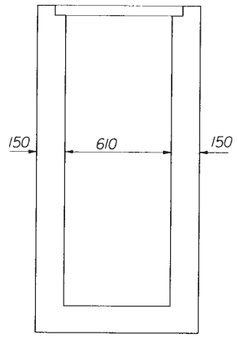

PARTIAL SECTION BB

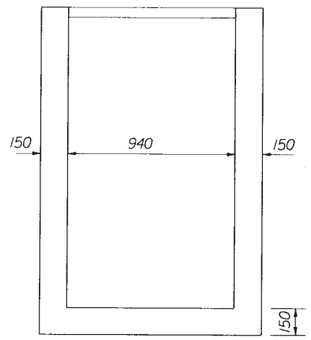

PARTIAL SECTION CC

DITCH BOTTOM INLET C

INDEX 232

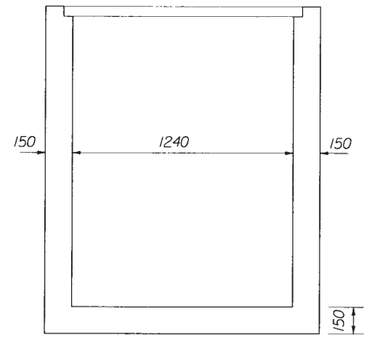

PARTIAL SECTION BB

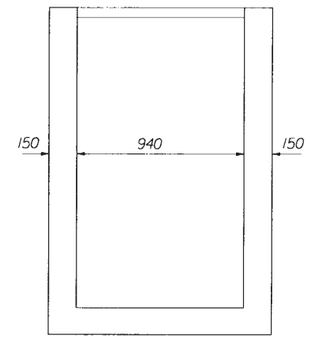

PARTIAL SECTION CC

DITCH BOTTOM INLET D

INDEX 232

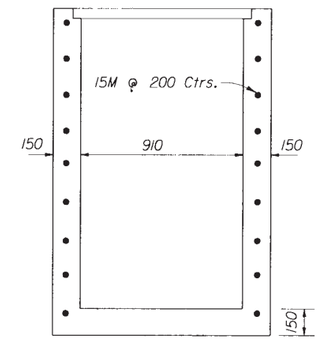

PARTIAL SECTION BB

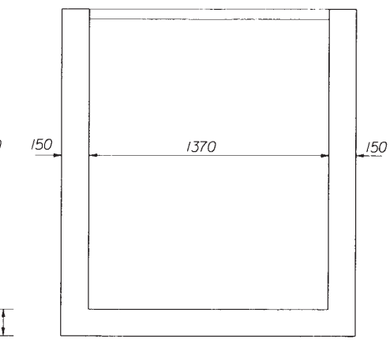

PARTIAL SECTION CC

DITCH BOTTOM INLET E

INDEX 232

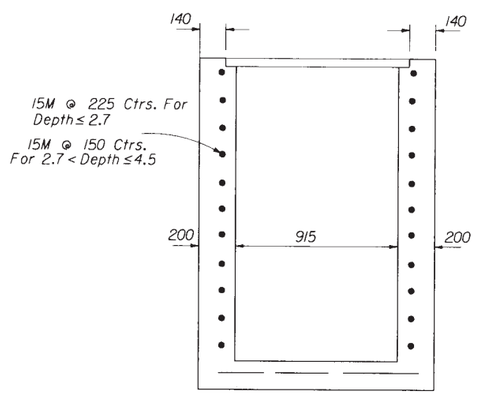

PARTIAL SECTION BB

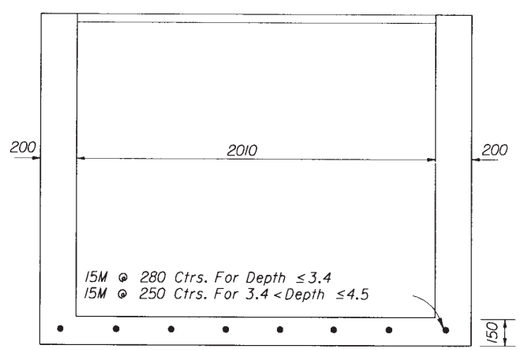

PARTIAL SECTION CC

DITCH BOTTOM INLET H (3-GRATE)

INDEX 232

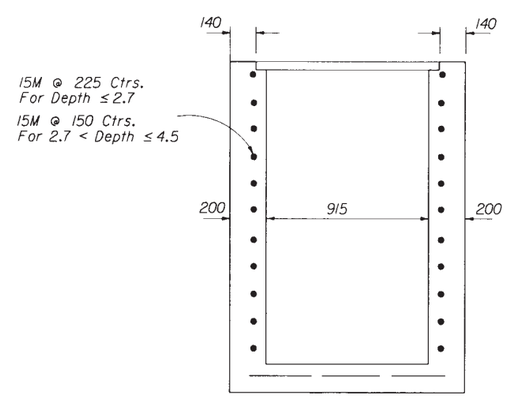

PARTIAL SECTION BB

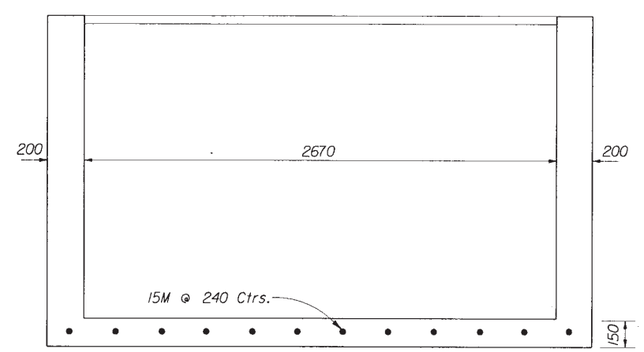

PARTIAL SECTION CC

DITCH BOTTOM INLET H (4-GRATE)

INDEX 232

STATE OF FLORIDA DEPARTMENT OF TRANSPORTATION
ROAD DESIGN

SUPPLEMENTARY DETAILS FOR MANHOLES AND INLETS

	Names	Dates
Designed By	EGR/JGW	09/86
Drawn By	WPH/dds	09/86
Checked By	EGR	09/86
F.H.W.A. Approved:		11/07/86

Approved By L A Mclemore
State Drainage Engineer

Revision No.	Sheet No.	Index No.
94	5 of 6	201

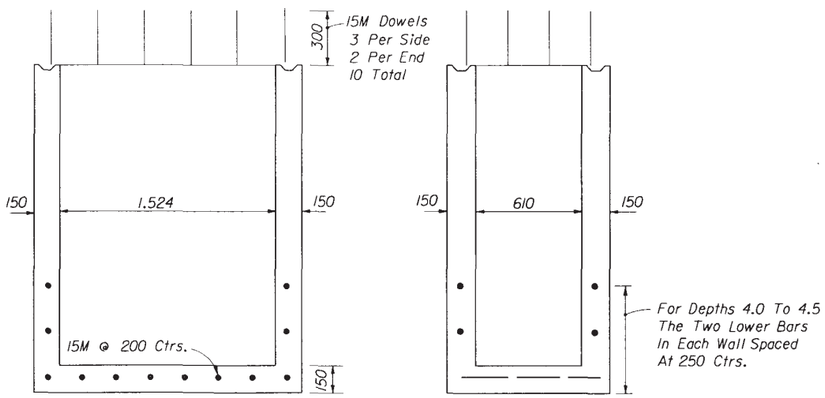

PARTIAL SECTION AA

PARTIAL SECTION BB

MEDIAN BARRIER INLET TYPES 1 & 2

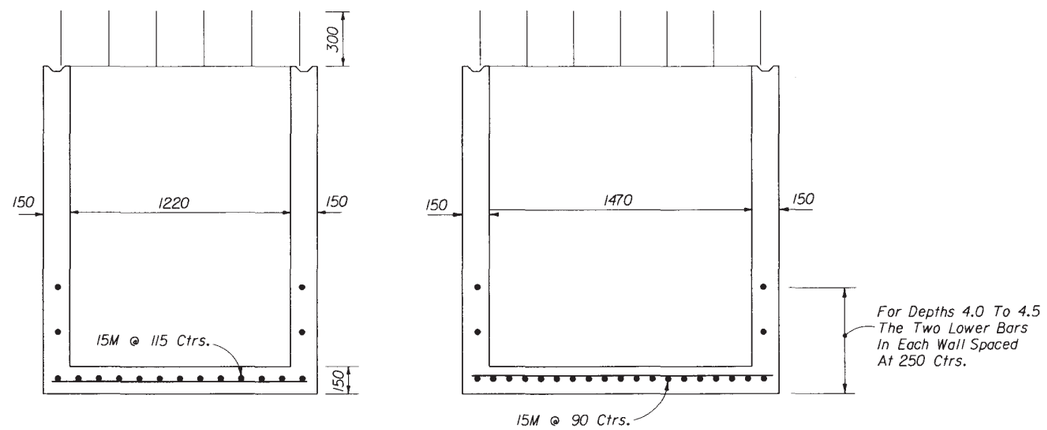

PARTIAL SECTION AA

PARTIAL SECTION BB

MEDIAN BARRIER INLET TYPES 3,4, & 5

INDEX 217

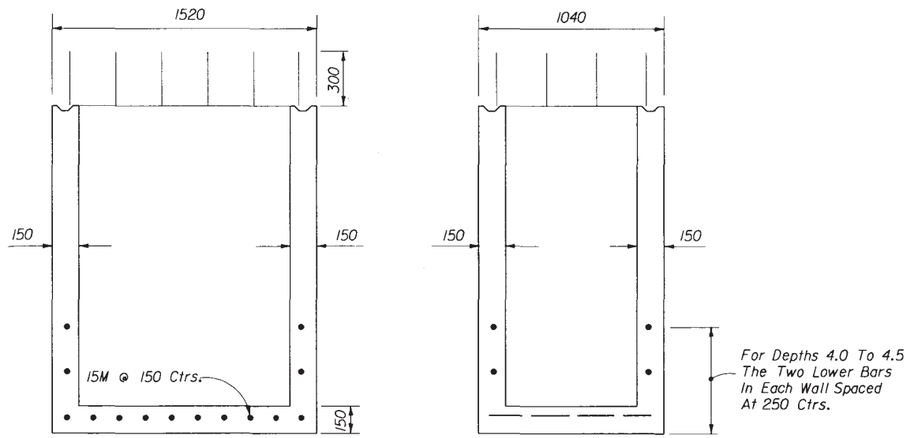

PARTIAL SECTION AA

PARTIAL SECTION BB

BARRIER WALL (RIGID) (C & G)

INDEX 219

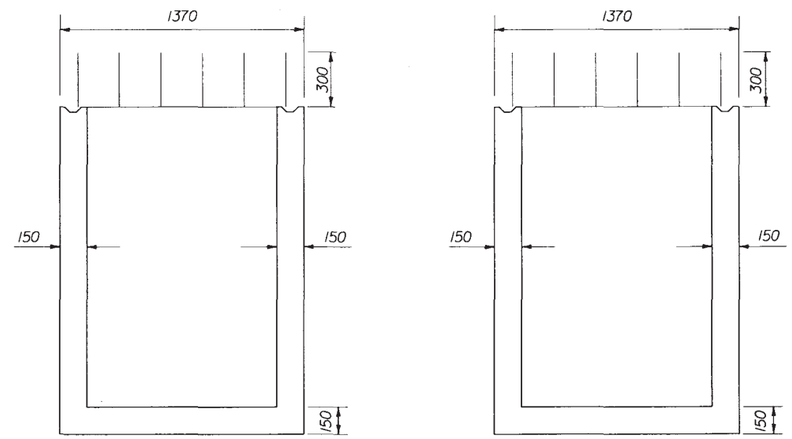

PARTIAL SECTION AA

PARTIAL SECTION BB

STRUCTURE BOTTOM TYPE P

SIZE 1067 x 1067

INDEX 200

STATE OF FLORIDA DEPARTMENT OF TRANSPORTATION
ROAD DESIGN

SUPPLEMENTARY DETAILS FOR MANHOLES AND INLETS

	Names	Dates
Designed By		
Drawn By		
Checked By		

Approved By S.A. McGehee
State Drainage Engineer

Revision No.	Sheet No.	Index No.
94	6 of 6	201

F.H.W.A. Approved:

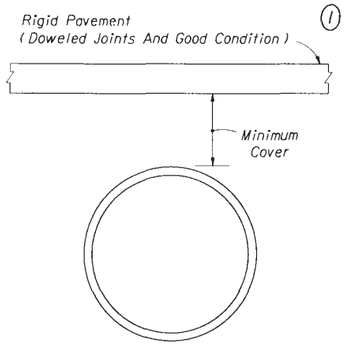

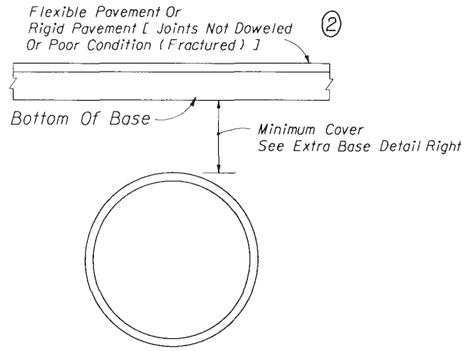

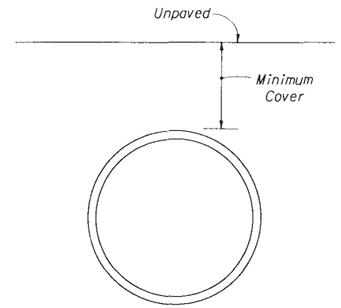

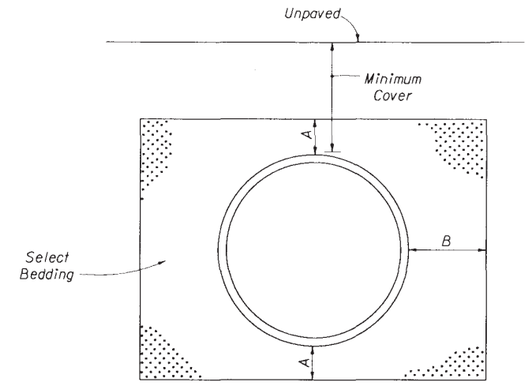

PIPE TYPE	A	B
Concrete	75	300
Corrugated Steel	150	$\frac{D}{2}$ but not less than 300
Corrugated Aluminum	150	$\frac{D}{2}$ but not less than 450
Corrugated Polyethlyene	150	600

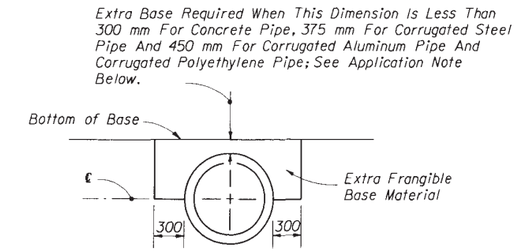

The cost of furnishing and installing the extra base material shall be included in the cost of the culvert.

FRANGIBLE BASE

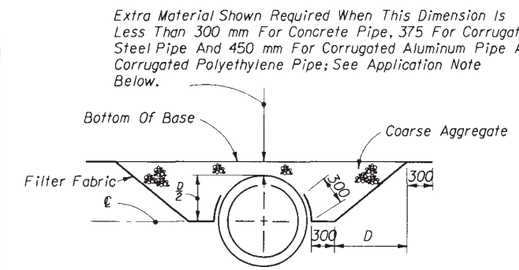

The Contractor shall furnish and install coarse aggregate on filter fabric. The coarse aggregate shall be placed in 150 mm lifts and compacted sufficiently as to be firm and unyielding. The coarse aggregate shall be gravel or stone meeting the requirements of Section 901-2 or 901-3 respectively. The gradation shall meet Section 901-6, Grades 4, 467, 5, 56, or 57 unless restricted in the plans. The filter fabric shall be Type D-3 (See Index 199). The cost of furnishing and installing the coarse aggregate and filter fabric shall be included in the cost of the culvert.

ASPHALTIC CONCRETE BASE

Note: Extra base is required when cross culverts are located on facilities subject to high speed traffic (≥ 90 km/h) or high traffic volumes (> 1600 ADT) and the cover is within the ranges specified in the notations above.

EXTRA BASE FOR CROSS CULVERTS UNDER FLEXIBLE PAVEMENTS

RIGID PAVEMENT (1)

PIPE TYPE/SIZE & SHAPE	MINIMUM COVER (mm)
CONCRETE	
All Round & Elliptical	150
CORRUGATED STEEL	
375-1800 Round & Arch Equiv.	225
1950 & Larger Round & Arch Eq.	375
CORRUGATED ALUMINUM	
375-1800 Round & Arch Equiv.	225
1950-2550 Round & Arch Equiv.	375
2700 & Larger Round	450
CORRUGATED POLYETHYLENE	
375-900 Round	225
POLYVINYL CHLORIDE	
375-900 Round	225

FLEXIBLE PAVEMENT (2)

PIPE TYPE/SIZE & SHAPE	MINIMUM COVER (mm)
CONCRETE	
All Round & Elliptical	150
CORRUGATED STEEL	
300-750 Round	300 [300]
900-1200 Round	450 (300) [375]
1350-1800 Round	525 (375) [450]
1950-2400 Round	(450) [675]
2550 & Larger Round	(600) [825]
375-750 Arch Equivalent	450 [450]
900-1200 Arch Equivalent	600 (300) [450]
1350-1800 Arch Equivalent	675 (375) [600]
1950-2400 Arch Equivalent	(450) [750]
2550 & Larger Arch Equivalent	(600)
CORRUGATED ALUMINUM	
300-600 Round	375 [300]
750-1200 Round	450 (300) [450]
1350-1800 Round	600 (450) [600]
1950-2550 Round	(600) [750]
2700 & Larger	(750)
375-600 Arch Equivalent	600 [525]
750-1200 Arch Equivalent	675 (375) [600]
1350-1800 Arch Equivalent	750 (450) [675]
1950-2250 Arch Equivalent	(600) [750]
2400-2550 Arch Equivalent	(750)
CORRUGATED POLYETHYLENE	
375-900 Round	375
POLYVINYL CHLORIDE	
375-900 Round	375

UNPAVED W/O SELECT BEDDING

PIPE TYPE/SIZE & SHAPE	MINIMUM COVER (mm) COMM	MINIMUM COVER (mm) NON COMM
CONCRETE		
All Round & Elliptical	300	225
CORRUGATED STEEL		
300-750 Round	600 [450]	450 [375]
900-1200 Round	600 (450) [525]	450 (300) [375]
1350-1800 Round	600 (450) [525]	450 (300) [375]
1950-2400 Round	(600) [750]	(450) [675]
2550 & Larger Round	(750) [900]	(600) [825]
375-750 Arch Equivalent	600 [450]	450 [375]
900-1200 Arch Equivalent	750 (450) [600]	600 (300) [450]
1350-1800 Arch Equivalent	900 (600) [750]	750 (450) [600]
1950-2400 Arch Equivalent	(750) [900]	(600) [750]
2550 & Larger Arch Equivalent	(900)	(750)
CORRUGATED ALUMINUM		
300-600 Round	675 [600]	525[450]
750-1200 Round	750 (600) [675]	600 (450) [525]
1350-1800 Round	900 (750) [825]	750 (600) [675]
1950-2550 Round	(900) [1050]	(750) [900]
2700 & Larger	1050	900
375-600 Arch Equivalent	900 [825]	675 [600]
750-1200 Arch Equivalent	975 (675) [900]	825 (525) [750]
1350-1800 Arch Equivalent	1050 (750) [900]	900 (600) [750]
1950-2250 Arch Equivalent	(900) [1050]	(750) [900]
2400-2550 Arch Equivalent	(1050)	(900)
CORRUGATED POLYETHYLENE		
375-900 Round	675	525
POLYVINYL CHLORIDE		
375-900 Round	525	525

UNPAVED WITH SELECT BEDDING

PIPE TYPE/SIZE & SHAPE	MINIMUM COVER (mm) COMM	MINIMUM COVER (mm) NON COMM
CONCRETE		
All Round & Elliptical	225	150
CORRUGATED STEEL		
300-750 Round	450 [375]	300 [300]
900-1200 Round	450 (300) [375]	300 (300) [300]
1350-1800 Round	450 (300) [375]	375 (300) [300]
1950-2400 Round	(450) [675]	(300) [300]
2550 & Larger Round	600 [825]	450 [525]
375-750 Arch Equivalent	450 [450]	300 [300]
900-1200 Arch Equivalent	600 (300) [525]	450 (300) [375]
1350-1800 Arch Equivalent	720 (450) [600]	600 (300) [450]
1950-2400 Arch Equivalent	(600) [675]	(450) [525]
2550 & Larger Arch Equivalent	(760)	(600)
CORRUGATED ALUMINUM		
300-600 Round	525 [525]	375 [375]
750-1200 Round	600 (450) [525]	450 (300) [375]
1350-1800 Round	750 (600) [675]	600 (450) [525]
1950-2550 Round	(750) [825]	(600) [675]
2700 & Larger	900	750
375-600 Arch Equivalent	675 [600]	600 [525]
750-1200 Arch Equivalent	825 (525) [675]	675 (375) [525]
1350-1800 Arch Equivalent	900 (600) [750]	750 (450) [600]
1950-2250 Arch Equivalent	(750) [900]	(600) [750]
2400-2550 Arch Equivalent	(900)	(750)
CORRUGATED POLYETHYLENE		
375-900 Round	525	375
POLYVINYL CHLORIDE		
375-900 Round	525	375

GENERAL NOTES

1. The tabulated values are recommended minimum dimensions to withstand anticipated highway traffic loads. Additional cover may be required to support construction equipment loads or highway traffic loads before pavement is completed. Some size thickness combinations may require minimum cover greater than those listed above. See Sheets 2, 3, & 4.
2. Less than the tabulated minimum cover may be used provided suitable method (s) are detailed in the plans. These features may include but are not limited to extra strength pipe, select bedding, select backfill and encasement.
3. Values shown in parentheses ( ) are for 75 mm x 25 mm corrugations which must be specified to utilize the lesser cover.
4. The tabulated values in the brackets [] apply to Type I-R (Spiral Rib) pipe which must be specifed to utilize the lesser cover.
5. Commercial and noncommercial refers to typical vehicular utilization of unpaved roads and drives where rutting and cover displacement may occur.

MINIMUM COVER FOR CONCRETE, STEEL, ALUMINUM AND POLYETHYLENE PIPE

STATE OF FLORIDA DEPARTMENT OF TRANSPORTATION
ROAD DESIGN

COVER HEIGHT

	Names	Dates
Designed By	EGR	09/84
Drawn By	DAE	09/84
Checked By	EGR	09/84
F.H.W.A. Approved: 09/21/84		

Approved By S A McLemore
State Drainage Engineer

Revision No.	Sheet No.	Index No.
94	1 of 4	205

ROUND PIPE DIMENSIONS

Equiv. Dia. (mm)	Area (m^2)	Wall Thickness (mm)* Classes II, III, IV, V		
		A WALL	B WALL	C WALL
300	0.07	44	50	NA
375	0.11	47	57	NA
450	0.17	50	63	NA
600	0.29	63	75	94
750	0.46	69	88	107
900	0.66	76	100	119
1050	0.89	88	113	132
1200	1.17	100	125	144
1350	1.48	113	138	157
1500	1.82	125	150	167
1650	2.21	138	163	182
1800	2.65	150	175	194
1950	3.08	163	190	207
2100	3.58	175	203	219
2250	4.12	190	215	234
2400	4.67	203	228	247
2550	5.27	215	241	260
2700	5.92	228	254	273
2850	6.59	241	—	—
3000	7.29	254	—	—

* For Informational Purposes Only
Do Not Specify Wall Thickness
Option B Wall Is Industry Standard

ROUND PIPE INSTALLATIONS
(All Sizes)

Design	Height Of Fill (m)	Pipe Class	Bedding Class	Projection Condition
Standard	0.3-2.5	II	C	Positive
	2.6-4.3	III	C	Positive
	4.4-6.7	IV	C	Positive
	6.8-8.0 *	V *	C *	Positive
Modified Bedding	8.1-9.8	V	B	Positive
Modified Trench	9.9-13.1	V	B	Zero
	13.2-21.4	V	B	Negative
	21.5+	V	B	Imperfect

Pipe Class II	D-Load = 50.0 N/m/mm (0.3 mm Crack) D-Load = 75.0 N/m/mm (Ultimate)
Pipe Class III	D-Load = 65.0 N/m/mm (0.3 mm Crack) D-Load = 100.0 N/m/mm (Ultimate)
Pipe Class IV	D-Load = 100.0 N/m/mm (0.3 mm Crack) D-Load = 150.0 N/m/mm (Ultimate)
Pipe Class V	D-Load = 150.0 N/m/mm (0.3 mm Crack) D-Load = 175.0 N/m/mm (Ultimate)

* Under some conditions, the use of Class IV pipe and Class B bedding should be considered in lieu of Class V with Class C bedding.

ELLIPTICAL PIPE DIMENSIONS

Nominal Dimensions				Equiv. Dia. (mm)	Area (m^2)	Wall Thickness (mm)
Horiz.		Vert.				Classes HE II, III, IV VE II, III, IV
Rise (mm)	Span (mm)	Rise (mm)	Span (mm)			
NA	NA	NA	NA	300	NA	NA
300	450	450	300	375	0.12	63
365	575	575	365	450	0.17	69
490	770	770	490	600	0.31	82
610	960	960	610	750	0.47	94
730	1150	1150	730	900	0.69	113
855	1345	1345	855	1050	0.95	125
975	1535	1535	975	1200	1.20	138
1095	1730	1730	1095	1350	1.54	150
1220	1920	1920	1220	1500	1.90	163
1340	2110	2110	1340	1650	2.30	175
1465	2305	2305	1465	1800	2.74	190
1585	2495	2495	1585	1950	3.21	203
1705	2690	2690	1705	2100	3.72	215
1830	2880	2880	1830	2250	4.28	228
1950	3070	3070	1950	2400	4.87	241
2075	3265	3265	2075	2550	5.50	254
2195	3455	3455	2195	2700	6.17	266
2315	3648	3648	2315	2850	6.87	279
2440	3840	3840	2440	3000	7.61	292

For Informational Purposes Only

ELLIPTICAL PIPE INSTALLATIONS
(All Sizes)

Installation	Height Of Fill (m)	Pipe Class	Bedding Class
Horizontal	0.3-1.9*	HE II*	C
	2.0-3.1	HE III	C
	3.2-4.8	HE IV	C
	5.0+	Special Design	Modified
Vertical	0.3-1.9*	VE II*	C
	2.0-3.1	VE III	C
	3.2-4.9	VE IV	C
	5.0+	Special Design	Modified

Pipe Class HE II And VE II	D-Load = 50.0 N/m/mm (0.3 mm Crack) D-Load = 75.0 N/m/mm (Ultimate)
Pipe Class HE III And VE III	D-Load = 65.0 N/m/mm (0.3 mm Crack) D-Load = 100.0 N/m/mm (Ultimate)
Pipe Class HE IV And VE IV	D-Load = 100.0 N/m/mm (0.3 mm Crack) D-Load = 175.0 N/m/mm (Ultimate)

*Note: HE III and VE III pipe required for depths of cover less than 0.6 for 375, 450 and 600 equivalent.

Note: Height of fill (maximum cover) is measured from top of finished grade to outside top of pipe.

MAXIMUM COVER FOR REINFORCED CONCRETE PIPE ROUND AND ELLIPTICAL

STATE OF FLORIDA DEPARTMENT OF TRANSPORTATION
ROAD DESIGN

COVER HEIGHT

	Names	Dates
Designed By	EGR	09/85
Drawn By	HSD	09/85
Checked By	EGR	09/85

F.H.W.A. Approved:

Approved By S.D. McLemore
State Drainage Engineer

Revision No.	Sheet No.	Index No.
94	2 of 4	205

ROUND PIPE - 67 x 13 CORRUGATION

D (mm)	Area (m²)	Maximum Height Of Fill (m) — Sheet Thickness In Millimeters (Gage): 1.63 mm (16)	2.01 mm (14)	2.77 mm (12)	3.51 mm (10)	4.27 mm (8)	Min. Cover (m)
300	0.07	30.5+	30.5+	NA	NA	NA	See Sheet 1 of 4
375	0.11	30.5+	30.5+	NA	NA	NA	
450	0.16	30.5+	30.5+	30.5+	NA	NA	
525	0.22	30.5+	30.5+	30.5+	NA	NA	
600	0.29	30.5+	30.5+	30.5+	NA	NA	
750	0.45	25.9	30.5+	30.5+	NA	NA	
900	0.65	21.6+	26.8	30.5+	30.5+	NA	
1050	0.88	18.3+	23.2	30.5+	30.5+	NA	
1200	1.16	16.1	20.1	28.3	30.5+	30.5+*	
1350	1.47	NS	18.0	25.0	30.5+	30.5+*	
1500	1.80	NS	NS	22.6	29.0	30.5+*	
1650	2.19	NS	NS	NS	26.5	30.5+*	
1800	2.60	NS	NS	NS	24.1	29.6*	
1950	3.05	NS	NS	NS	NS	27.4*	
2100	3.54	NS	NS	NS	NS	25.3*	

ROUND PIPE - 75 x 25 CORRUGATION

D (mm)	Area (m²)	Maximum Height Of Fill (m) — Sheet Thickness In Millimeters (Gage): 1.63 mm (16)	2.01 mm (14)	2.77 mm (12)	3.51 mm (10)	4.27 mm (8)	Min. Cover (m)
900	0.66	24.7	30.5+	30.5+	NA	NA	See Sheet 1 of 4
1050	0.89	21.3	26.5	30.5+	NA	NA	
1200	1.17	18.6	23.2	30.5+	30.5+	NA	
1350	1.48	16.5	20.7	29.0	30.5+	NA	
1500	1.82	14.6	18.6	25.9	30.5+	NA	
1650	2.21	13.4	16.8	23.8	30.5	30.5+*	
1800	2.63	12.2	15.5	21.6	27.7	30.5+*	
1950	3.08	11.3	14.3	20.1	25.6	30.5+*	
2100	3.58	10.7	13.1	18.6	23.8	30.5+*	
2250	4.11	9.8	12.2	17.4	22.3	27.4*	
2400	4.67	NS	11.6	16.2	20.7	25.6*	
2550	5.27	NS	11.0	15.2	19.5	24.1*	
2700	5.91	NS	NS	14.3	18.6	22.9*	
2850	6.59	NS	NS	13.7	17.7	21.6*	
3000	7.20	NS	NS	12.8	16.8	20.4*	
3300	8.83	NS	NS	NS	15.2	18.6*	

ROUND PIPE - 125 x 25 CORRUGATION (3)

D (mm)	Area (m²)	Maximum Height Of Fill (m) — Sheet Thickness In Millimeters (Gage): 1.63 mm (16)	2.01 mm (14)	2.77 mm (12)	3.51 mm (10)	4.27 mm (8)	Min. Cover (m)
900	0.66	21.9	27.4	30.5+	NA	NA	See Sheet 1 of 4
1050	0.89	18.9	23.5	30.5+	NA	NA	
1200	1.17	16.5	20.7	29.0	30.5+	NA	
1350	1.48	14.6	18.3	25.6	30.5+	NA	
1500	1.82	13.1	16.5	23.2	29.9	NA	
1650	2.21	11.9	14.9	21.0	27.1	30.5+*	
1800	2.63	11.0	13.7	19.2	24.7	30.5*	
1950	3.08	10.1	12.5	17.7	22.9	28.0*	
2100	3.58	9.4	11.6	16.5	21.3	25.9*	
2250	4.11	8.8	11.0	15.2	19.8	24.4*	
2400	4.67	NS	10.4	14.3	18.6	22.9*	
2550	5.27	NS	9.8	13.4	17.4	21.3*	
2700	5.91	NS	NS	12.8	16.5	20.1*	
2850	6.59	NS	NS	12.2	15.5	19.2*	
3000	7.20	NS	NS	11.6	14.9	18.3*	
3300	8.83	NS	NS	NS	13.4	16.5*	

Notes:

Increase the minimum cover values shown on Sheet 1 of 4 by 13 mm for gage and size combinations below the heavy lines.

Height of fill (maximum cover) is measured from top of finished grade to outside top of pipe.

*Recorrugated end not available. May be considered for cross drain and side drain applications only.

NA - Not Available

NS - Not Suitable (For Highway H-20 Loadings)

(1) Limited availability of this product. Check availability before specifying (generally limited to 75 mm x 25 mm corrugation pipe arch fabricated from 1500 and smaller diameter round pipe in 12 ga. and thicker material).

(2) 360° perforated pipe arch (french drain pipe) is not recommended. Do not specify without checking suitability and availability.

(3) 125 mm x 25 mm corrugated pipe is currently not manufactured for the Florida market. Check availability before specifying.

(4) 2.77 mm (12 gage) for spiral rib, 2.4 m maximum cover, 19 mm x 25 mm x 292 mm rib spacing (2 rib) only.

PIPE ARCH: SPIRAL RIB: 19 x 19 x 191 RIB SPACING
PIPE ARCH: SPIRAL RIB: 19 x 25 x 292 RIB SPACING
PIPE ARCH - 67 x 13 CORRUGATION

Span (mm)	Rise (mm)	Equiv. Round Pipe (mm)	Area (m²)	Minimum Sheet Thickness Required (mm) (Ga)	Maximum Height Of Fill (m) — Maximum Corner Pressure kg/m²: 19530	29295	Min. Cover (m)
450	340	375	0.10	1.63 (16)	3.7	4.3	See Sheet 1 of 4
510	380	450	0.15	1.63 (16)	3.1	4.3	
560	420	525	0.20	1.63 (16)	2.1	4.0	
680	500	600	0.25	1.63 (16)	1.5	3.4	
910	660	750	0.40	1.63 (16)	NS	2.1	
1030	740	900	0.60	1.63 (16)	NS	2.1	
1150	820	1050	0.80	2.01 (14)	NS	1.8	
1390	970	1200	1.04	2.77 (12)	NS	2.4	
1630	1120	1350	1.30	2.77 (12)	NS	2.7	
1880	1260	1500	1.60	3.51 (10) (4)	NS	3.0 (4)	
1960	1330	1650	2.00	3.51 (8)* (4)	1.5	3.0 (4)	
2130	1400	1800	2.30	3.51 (8)* (4)	1.5	3.0 (4)	

PIPE ARCH-75 x 25 (1)(2)(3) and 125 x 25 (2)(3) CORR.

Span (mm)	Rise (mm)	Equiv. Round Pipe (mm)	Area (m²)	Minimum Sheet Thickness Required (mm) (Ga)	Maximum Height Of Fill (m) — Maximum Corner Pressure kg/m²: 191520	287281	Min. Cover (m)
1000	700	900	0.65	2.01 (14)	2.4	3.7	See Sheet 1 of 4
1100	850	1050	0.87	2.01 (14)	2.4	4.0	
1320	1030	1200	1.14	2.01 (14)	2.4	4.0	
1550	1200	1350	1.44	2.01 (14)	2.4	4.0	
1650	1270	1500	1.78	2.01 (14)	2.7	4.0	
1830	1370	1650	2.13	2.01 (14)	3.4	4.9	
2030	1530	1800	2.52	2.01 (14)	3.4	5.2	
2230	1700	1950	2.95	2.01 (14)	3.1	4.9	
2500	1830	2100	3.40	2.01 (14)	3.4	5.2	
2650	1880	2250	3.90	2.77 (12)	3.1	4.6	
2800	1950	2400	4.42	2.77 (12)	3.1	4.9	
2972	2010	2550	5.00	2.77 (12)	3.1	4.6	
3300	2080	2700	5.57	3.51 (10)	2.7	4.3	
3480	2220	2850	6.20	3.51 (10)	2.4	4.0	
3650	2280	3000	6.85	4.27 (8)	2.1	3.7	

ROUND PIPE - SPIRAL RIB
RIB SPACING (19 x 19 x 190) or (19 x 25 x 292)

D (mm)	Area (m²)	Maximum Height Of Fill (m) — Sheet Thickness In Millimeters (Gage): 1.63 mm (16)	2.01 mm (14)	2.77 mm (12)	3.51 mm (10)	4.27 mm (8)	Min. Cover (m)
300	0.07	NA	NA	NA	NA	NA	See Sheet 1 of 4
375	0.11	NA	NA	NA	NA	NA	
450	0.16	20.7	21.9	NA	NA	NA	
525	0.22	17.6	18.8	30.5+	NA	NA	
600	0.29	15.5	21.9	30.5+	NA	NA	
750	0.45	12.4	17.6	29.5	NA	NA	
900	0.65	10.3	14.6	24.6	NA	NA	
1050	0.88	8.8	12.4	21.0	NA	NA	
1200	1.16	7.9	10.9	18.5	NA	NA	
1350	1.47	7.0	9.7	16.4	NA	NA	
1500	1.80	NS	8.8	14.9	NA	NA	
1650	2.19	NS	7.9	13.4	NA	NA	
1800	2.60	NS	7.3	12.1	NA	NA	
1950	3.05	NS	NS	11.2	NA	NA	
2100	3.54	NS	NS	10.6	NA	NA	
2250	4.07	NS	NS	9.7	NA	NA	
2400	4.63	NS	NS	9.1	NA	NA	
2550	5.22	NS	NS	8.8	NA	NA	
2700	5.85	NS	NS	8.2 (A)	NA	NA	

(A) = 19 x 25 x 292 Only.

MAXIMUM COVER FOR CORRUGATED STEEL PIPE ROUND AND PIPE ARCH

STATE OF FLORIDA DEPARTMENT OF TRANSPORTATION
ROAD DESIGN

COVER HEIGHT

	Names	Dates
Designed By	EGR	09/85
Drawn By	HSD	09/85
Checked By	EGR	09/85

F.H.W.A. Approved:

Approved By: A. A. McCentre, State Drainage Engineer

Revision No.	Sheet No.	Index No.
94	3 of 4	205

ROUND PIPE - 67 x 13 CORRUGATION

D (mm)	Area (m^2)	Maximum Height Of Fill (m) — Sheet Thickness In mm (Gage): 1.524 (16)	1.905 (14)	2.667 (12)	3.429 (10)	4.166 (8)	Min. Cover (m)
300	0.07	27.43	30.48+	NA	NA	NA	See Sheet 1 of 4
375	0.11	21.95	27.43	NA	NA	NA	
450	0.17	17.98	22.86	30.48+	NA	NA	
525	0.22	15.85	19.81	28.04	NA	NA	
600	0.29	13.41	17.07	24.08	NA	NA	
750	0.46	10.67 DR	13.41	19.20	NA	NA	
900	0.66	NS	10.97 DR	15.85	20.73	NA	
1050	0.89	NS	NS	13.41 DR	17.68	NA	
1200	1.17	NS	NS	11.58 DR	15.24 DR	18.59	
1350	1.48	NS	NS	10.36 DR	13.72 DR	16.46 DR	
1500	1.82	NS	NS	NS	11.89 DR	14.94 DR	
1650	2.21	NS	NS	NS	NS	13.41 DR	
1800	2.63	NS	NS	NS	NS	12.19 DR	

ROUND PIPE - 75 x 25 CORRUGATION

D (mm)	Area (m^2)	Maximum Height Of Fill (m) — Sheet Thickness In mm (Gage): 1.524 (16)	1.905 (14)	2.667 (12)	3.425 (10)	4.166 (8)	Min. Cover (m)
900	0.66	10.06	12.80	18.29	NA	NA	See Sheet 1 of 4
1050	0.89	8.53	10.97	15.54	NA	NA	
1200	1.17	7.32	9.45	13.72	17.68	NA	
1350	1.48	6.40	8.53	11.89	15.54	NA	
1500	1.82	5.79	7.32	10.67	14.02	NA	
1650	2.21	4.57 DR	6.71	9.75	12.80	15.54	
1800	2.63	NS	6.10 DR	8.84	11.58	14.33	
1950	3.08	NS	4.57 DR	8.23	10.67	13.11	
2100	3.58	NS	NS	7.32 DR	9.75	12.19	
2250	4.11	NS	NS	7.01 DR	9.14	11.28	
2400	4.67	NS	NS	6.40 DR	8.53 DR	10.36	
2550	5.27	NS	NS	NS	7.92 DR	9.75	
2700	5.91	NS	NS	NS	7.32 DR	9.14 DR	
2850	6.59	NS	NS	NS	NS	8.53 DR	
3000	7.29	NS	NS	NS	NS	8.23 DR	

ROUND PIPE - SPIRAL RIB
RIB SPACING (19 x 19 x 191)

D (mm)	Area (m^2)	Maximum Height Of Fill (m) — Sheet Thickness In mm (Gage): 1.524 (16)	1.905 (14)	2.667 (12)	3.425 (10)	4.166 (8)	Min. Cover (m)
300	0.07	NA	NA	NA	NA	NA	See Sheet 1 of 4
375	0.11	19.02 (1)	87 (1)	NA	NA	NA	
450	0.16	16.76	76	NA	NA	NA	
525	0.22	14.33	65	NA	NA	NA	
600	0.29	12.50	57	NA	NA	NA	
750	0.46	10.06 DR	45	22.25	NA	NA	
900	0.66	8.23 (4)	38 DR	18.59	NA	NA	
1050	0.89	NS	32 (4)	15.85	NA	NA	
1200	1.17	NS	NS	14.02	19.81	NA	
1350	1.49	NS	NS	12.19 DR	17.37	NA	
1500	1.82	NS	NS	10.07 (4)	15.85	NA	
1650	2.21	NS	NS	NS	14.33 DR	NA	
1800	2.63	NS	NS	NS	13.11 (4)	NA	
1950	3.08	NS	NS	NS	11.89 (4)	NA	
2100	3.58	NS	NS	NS	10.86 (4)	NA	
2250	4.11	NS	NS	NS	9.14 (1)(3)(4)	NA	
2400	4.67	NS	NS	NS	8.23 (1)(3)(4)	NA	

- NOTE

Special installation required.
Refer to AASHTO Standard Specifications for Highway Bridges or ASTM B788-88 and manufacturer's recommendations.

PIPE ARCH - 67 x 13 CORRUGATION (2)

Span (mm)	Rise (mm)	Equiv. Round Pipe (mm)	Area (m^2)	Minimum Sheet Thickness Required (mm) (Ga)	Maximum Height Of Fill (m) — Maximum Corner Pressure - kg/m^2: 19530	29295	Min. Cover (m)
450	340	375	0.10	1.524 (16)	3.66	4.57	See Sheet 1 of 4
510	380	450	0.15	1.524 (16)	3.05	4.27	
560	420	525	0.20	1.524 (16)	2.18	3.96	
680	500	600	0.42	1.905 (14)	1.52	3.35	
910	660	750	0.42	1.905 (14)	NS	2.13	
1030	740	900	0.60	2.667 (12)	NS	2.13	
1150	820	1050	0.83	2.667 (12)	NS	1.83	
1390	970	1200	1.08	3.429 (10)	NS	2.44	
1630	1120	1350	1.37	3.429 (10)	NS	2.74	
1880	1260	1500	1.68	4.166 (8)	NS	3.05	
1960	1330	1650	2.03	4.166 (8)	NS	3.05	
2130	1400	1800	2.42	4.166 (8)	NS	3.05	

PIPE ARCH - 75 x 25 CORRUGATION (1)(2)

Span (mm)	Rise (mm)	Equiv. Round Pipe (mm)	Area (m^2)	Minimum Sheet Thickness Required (mm) (Ga)	Maximum Height Of Fill (m) — Maximum Corner Pressure - kg/m^2: 19530	29295	Min. Cover (m)
1000	700	900	0.65	1.524 (16)	2.44	3.66	See Sheet 1 of 4
1100	850	1050	0.87	1.524 (16)	2.44	3.96	
1330	1030	1200	1.14	1.524 (16)	2.44	3.96	
1550	1200	1350	1.45	1.905 (14)	2.44	3.96	
1650	1270	1500	1.79	1.905 (14)	2.44	3.96	
1830	1370	1650	2.16	2.667 (12)	3.35	4.88	
2030	1530	1800	2.55	2.667 (12)	3.35	5.18	
2230	1700	1950	2.98	2.667 (12)	3.05	4.88	
2500	1830	2100	3.44	2.667 (12)	3.35	5.18	
2650	1880	2250	3.94	3.425 (10)	3.05	4.57	
2800	1950	2400	4.46	3.425 (10)	3.05	4.88	
2980	2010	2550	5.04	4.166 (8)	3.05	4.57	

PIPE ARCH - SPIRAL RIB
RIB SPACING (19 x 19 x 191)

Span (mm)	Rise (mm)	Equiv. Round Pipe (mm)	Area (m^2)	Minimum Sheet Thickness Required (mm) (Ga)	Maximum Height Of Fill (m) — Maximum Corner Pressure - kg/m^2: 19530	29295	Min. Cover (m)
405	355	375	0.11	1.524 (16)	3.66	3.96	See Sheet 1 of 4
510	405	450	0.16	1.524 (16)	3.05	3.66	
585	485	525	0.21	1.524 (16)	2.13	3.35	
685	535	600	0.28	1.524 (16)	1.52	3.05	
840	660	750	0.44	1.905 (14)	NS	2.74	
1015	785	900	0.65	1.905 (14)	NS	2.44	
1170	915	1050	0.87	2.667 (12)	NS	2.44	
1345	1040	1200	1.14	2.667 (12)	NS	2.44	
1525	1170	1350	1.45	2.667 (10)	NS	2.44	
1675	1295	1500	1.79	3.425 (10)	NS	2.44	
1855	1395	1650	2.16	3.425 (10)(4)	NS	2.44	
2055	1500	1800	2.55	3.425 (10)(4)	NS	2.44	

Notes:

Increase the minimum cover values shown on Sheet 1 of 4 by 150 mm for gage and size combinations below the heavy lines.

Height of fill (maximum cover) is measured from top of finished grade to outside top of pipe.

NA - Not Available

NS - Not Suitable (For Highway H-20 Loadings)

DR - Design Review is recommended for each specific application. The review should identify any special handling, installation, backfill procedures, and construction load restrictions which may be required. See FDOT Drainage Manual, Chapter 19, Section 19.4, Vol. II, 1987. The specification of the next thicker culvert in lieu of this review is not appropriate. (The review performed by the designer does not relieve the contractor from analyzing and taking any necessasry precautions required to protect partially or completely constructed pipe from the equipment used during construction.)

(1) Limited availability of this product. Check availability before specifying.

(2) 360° perforated pipe (french drain pipe) is not recommended in the pipe arch shape. Do not specify without checking both for suitability and availability.

(3) This size and gage combination must be strutted during installation per manufacturers recommendations. Extra care will be required during handling and installation.

(4) Use of this size and gage combination must be approved by the State Drainage Engineer.

MAXIMUM COVER FOR CORRUGATED ALUMINUM ALLOY ROUND PIPE AND PIPE ARCH

STATE OF FLORIDA DEPARTMENT OF TRANSPORTATION
ROAD DESIGN

COVER HEIGHT

	Names	Dates
Designed By	EGR	09/85
Drawn By	HSD	09/85
Checked By	EGR	09/85

F.H.W.A. Approved:

Approved By: S. A. McLemore, State Drainage Engineer

Revision No.	Sheet No.	Index No.
94	4 of 4	205

APPLICATION GUIDELINES TO CURB INLETS AND GUTTER INLETS

INDEX NO.	INLET TYPE	TYPE CURB/GUTTER	GRADE CONSIDERATION	HYDRAULIC INTAKE (m^3/s) (1)	BICYCLE SAFE / PEDESTRIAN SAFE	UTILITY LOCATION FROM CURB	MAXIMUM PIPE SIZE WITH STANDARD BOTTOMS (5)	COMMENTS
210 (2)	1	E & F	Continuous	0.115	Yes / Limited	Inside	750 mm	
	2 (3)	E & F	Sag	0.255	Yes / Limited	Inside	750 mm	
	3	E & F	Continuous	0.54	Yes / Limited	Inside	750 mm	
	4 (3)	E & F	Sag	0.184	Yes / Limited	Inside	750 mm	
211 (2)	5	E & F	Continuous	0.088	Yes / Limited	Outside	750 mm	
	6 (3)	E & F	Sag	0.125	Yes / Limited	Outside	750 mm	
212 (2)	7	Separator I & II	Continuous or Sag	0.212	Yes / Limited	Inside	600 mm Longitudinal 750 mm Transverse	
213 (2)	8	Separator IV & V	Continuous or Sag	0.125	Yes / Limited	Inside	600 mm Longitudinal 750 mm Transverse	
214 (2)	9	D & F	Continuous or Sag	0.014	Yes / Yes	Outside	750 mm	To be used only where flows are light to moderate and R/W does not permit the use of throated curb inlets. Vanes to be directed to major flow direction.
215 (2)	10	D & F	Continuous or Sag	0.008	Yes / Yes	Outside	750 mm	To be used only where flows are light and R/W does not permit the use of throated curb inlets.
217	1	Median Barrier Wall	Continuous	0.113	No / Yes (4)	NA	375 mm Longitudinal 750 mm Transverse	
	2	Median Barrier Wall	Sag	0.142	No / No (4)	NA	375 mm Longitudinal 750 mm Transverse	
	3 (3)	Median Barrier Wall	Double Inlet Continuous	0.113	No / Yes (4)	NA	1050 mm Longitudinal 750 mm Transverse	
	4 (3)	Median Barrier Wall	Double Inlet Sag	0.142	No / Yes (4)	NA	1050 mm Longitudinal 750 mm Transverse	
	5 (3)	Median Barrier Wall	Double Inlet Sag & Continuous	0.142	No / Yes (4)	NA	1050 mm Longitudinal 750 mm Transverse	
218	—	Barrier Wall	Continuous or Sag	0.147	Yes / Yes	NA	750 mm	
220	S	Shoulder	Continuous	0.113	No / Yes (4)	NA	750 mm Transverse	
221	V	Valley	Continuous or Sag	0.142	Yes / Yes	NA	750 mm Transverse	

(1) Hydraulic intake values do not represent hydraulic capacity but are shown to compare inlets based on a 0.2% longitudinal slope, 0.02 cross slope and a 90% efficiency factor. For other conditions the values shown should be adjusted for bypass flow or debris blockage. Sag inlet intake value is based on flooding the outside lane or shoulder, where spread rather than hydraulic intake may dictate inlet selection or spacing. Full design data and additional information is available in "A Study of Stormwater Inlet Capacities" by University of South Florida, and the Department's 1987 Drainage Manual Vol. 2, Chapter 12 and Vol. 3, Chapter 2.

(2) Curb inlets and transitions should be located outside pedestrian cross walk areas, preferably upgrade from these locations.

(3) Double throated inlets are usually not warranted unless the minor flow is in excess of 15 meters distance or 0.015 cubic meters per Second.

(4) Median Barrier Inlets Types 1, 2, 3, 4, 5 & Shoulder Inlet Type S can be made bicycle safe by specifying the reticuline grate.

(5) Pipe sizes are circular, Class III, B Wall, concrete pipe. Elliptical pipe and corrugated pipe are to be checked for fit in accordance with Index No. 201; metal pipe sizes should be reviewed using 68 mm x 13 mm corrugation up to 750 mm and 76 mm x 25 mm corrugation for larger sizes.

STATE OF FLORIDA DEPARTMENT OF TRANSPORTATION
ROAD DESIGN

CURB INLET & GUTTER INLET APPLICATION GUIDE

	Names	Dates
Designed By	E G R	09/06/84
Drawn By	D A E	09/06/84
Checked By	E G R	09/06/84
F.H.W.A. Approved:		09/21/84

Approved By S A McLenore
State Drainage Engineer

Revision No.	Sheet No.	Index No.
94	1 of 1	209

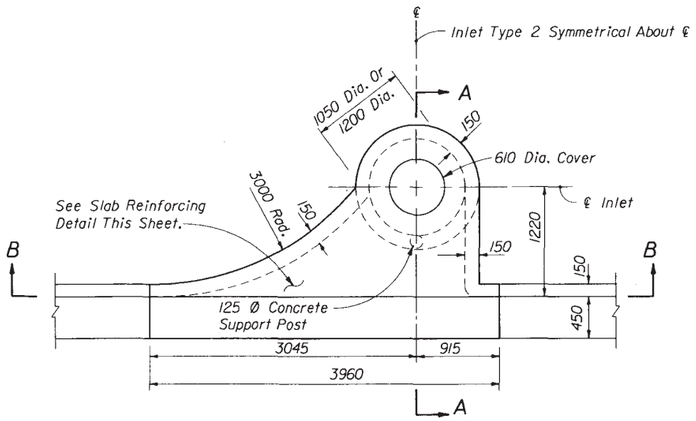

PLAN (INLET TYPE 2 SYMMETRICAL ABOUT ℄)

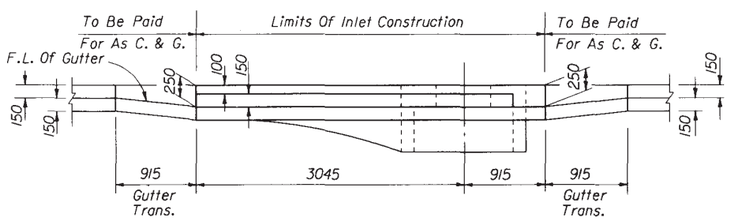

SECTION BB (INLET TYPE 2 SYMMETRICAL ABOUT ℄)

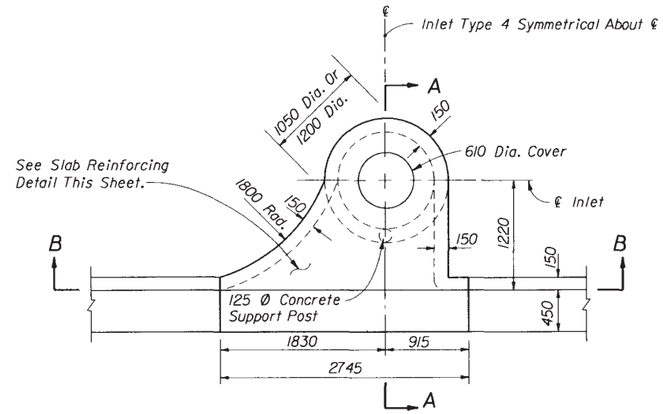

PLAN (INLET TYPE 4 SYMMETRICAL ABOUT ℄)

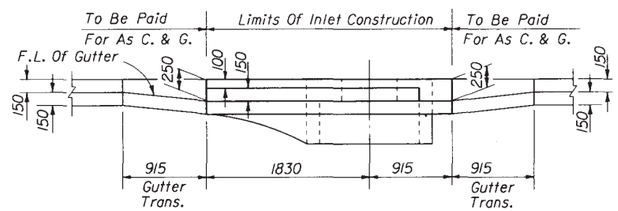

SECTION BB (INLET TYPE 4 SYMMETRICAL ABOUT ℄)

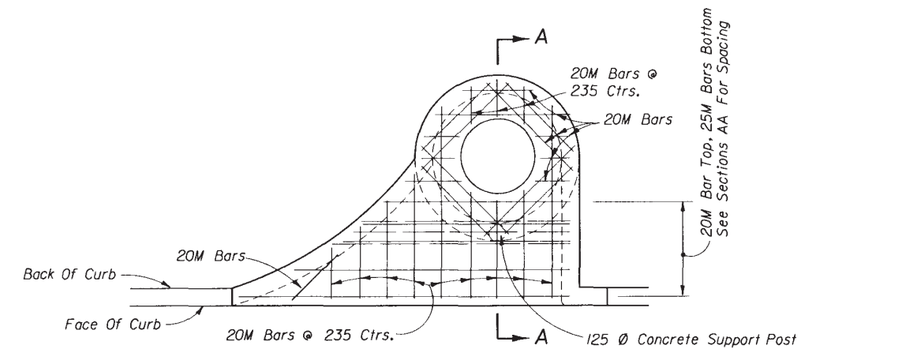

INLETS TYPES 1 AND 3

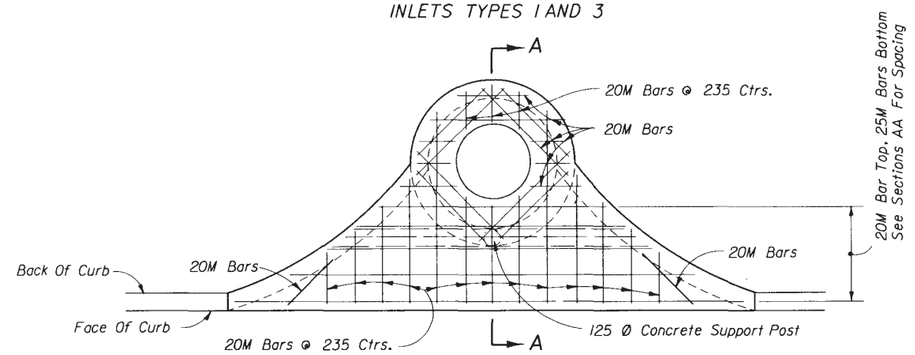

INLETS TYPES 2 AND 4

SLAB REINFORCING

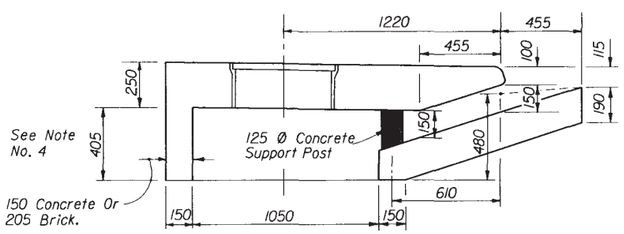

DIMENSIONAL SECTION
CURB TYPE F SHOWN

INLETS TYPES 1 AND 2

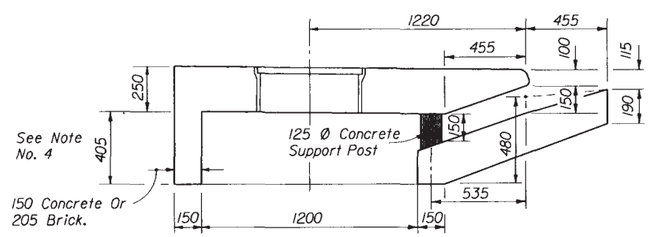

DIMENSIONAL SECTION
CURB TYPE F SHOWN

INLETS TYPES 3 AND 4

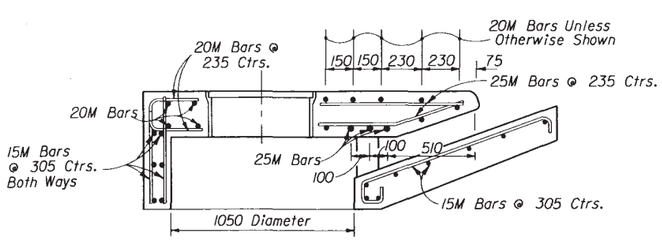

REINFORCING SECTION
1050 DIA. STRUCTURE BOTTOM (SECTION AA)

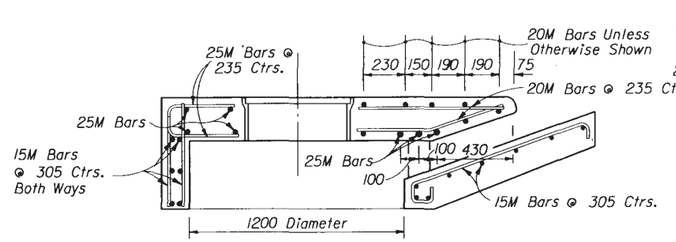

REINFORCING SECTION
1200 DIA. STRUCTURE BOTTOM (SECTION AA)

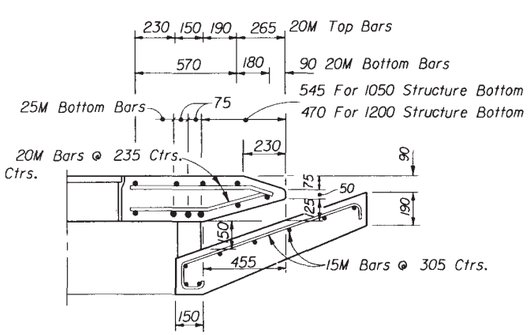

DIMENSION & REINFORCING HALF SECTION
TYPES A & E CURB (HALF SECTION AA)
(TYPE E GUTTER SHOWN)

TRANSVERSE SECTIONS FOR INLETS TYPES 1, 2, 3 & 4

GENERAL NOTES

1. The finished grade and slope of the inlet tops are to conform with the finished cross slope and grade of the proposed sidewalk and/or border.
2. When inlets are to be constructed on a curve, refer to the plans to determine the radius and, where necessary, modify the inlet details accordingly. Bend steel when necessary.
3. All steel in inlet top shall have 30 mm minimum cover unless otherwise shown. Inlet tops shall be either cast-in-place or precast concrete.
4. The rear wall portion of inlet tops Types 1, 2, 3 & 4 may be constructed with brick. Dowels to top slab required.
6. For supplemental details see Index No. 201.
5. Only round concrete support post will be acceptable.
7. These inlets are to be used with Curb and Gutter Types E and F and Curb Type A. Locate outside of pedestrain crosswalk where practical.
8. For structure bottoms see Index No. 200.
9. Inlet to be paid for under the contract unit price for Inlets (Curb) (Type ___), EA.

STATE OF FLORIDA DEPARTMENT OF TRANSPORTATION
ROAD DESIGN

CURB INLET TOPS TYPES 1, 2, 3, & 4

	Names	Dates	Approved By
Designed By			State Drainage Engineer
Drawn By			
Checked By			
F.H.W.A. Approved:		05/01/75	

Revision No.	Sheet No.	Index No.
94	1 of 1	210

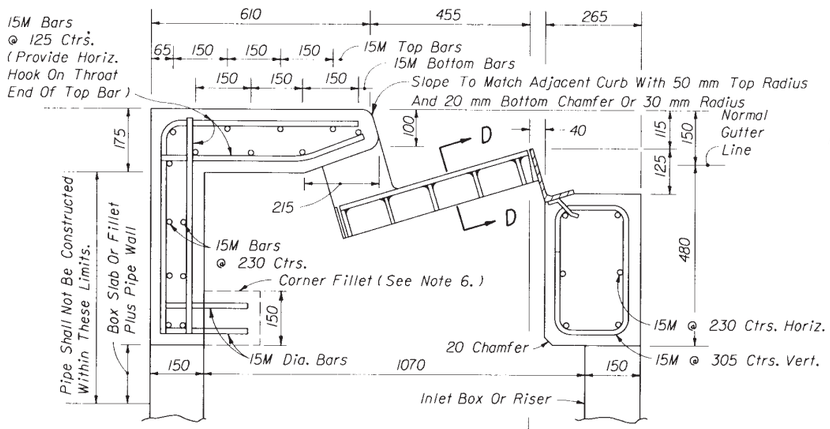

(Steel Cover Shown)

SECTION AA

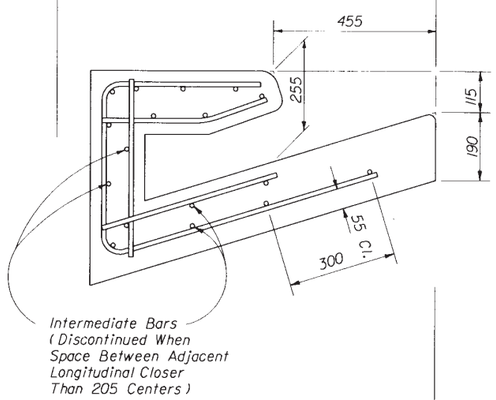

SECTION PP

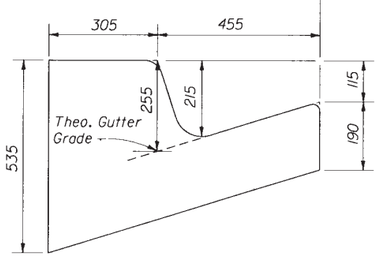

SECTION QQ

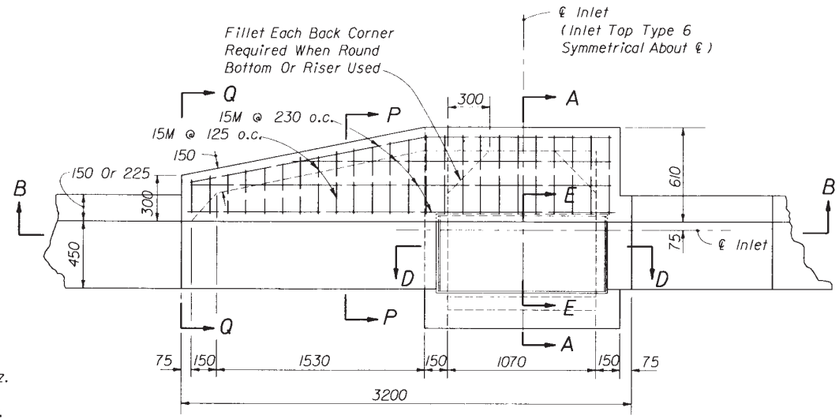

TOP VIEW

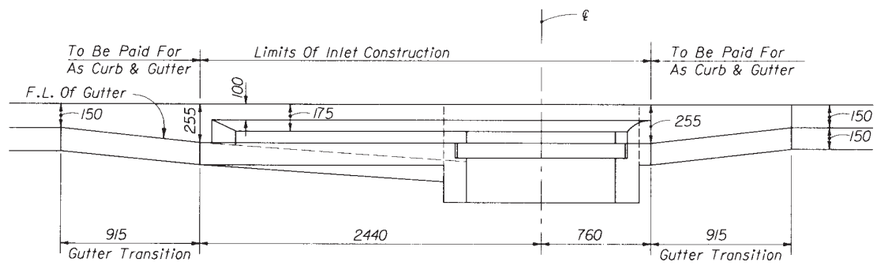

SECTION BB

(Curb Inlet Top Type 6 Symmetrical With Left Half)

INLET TYPE 5

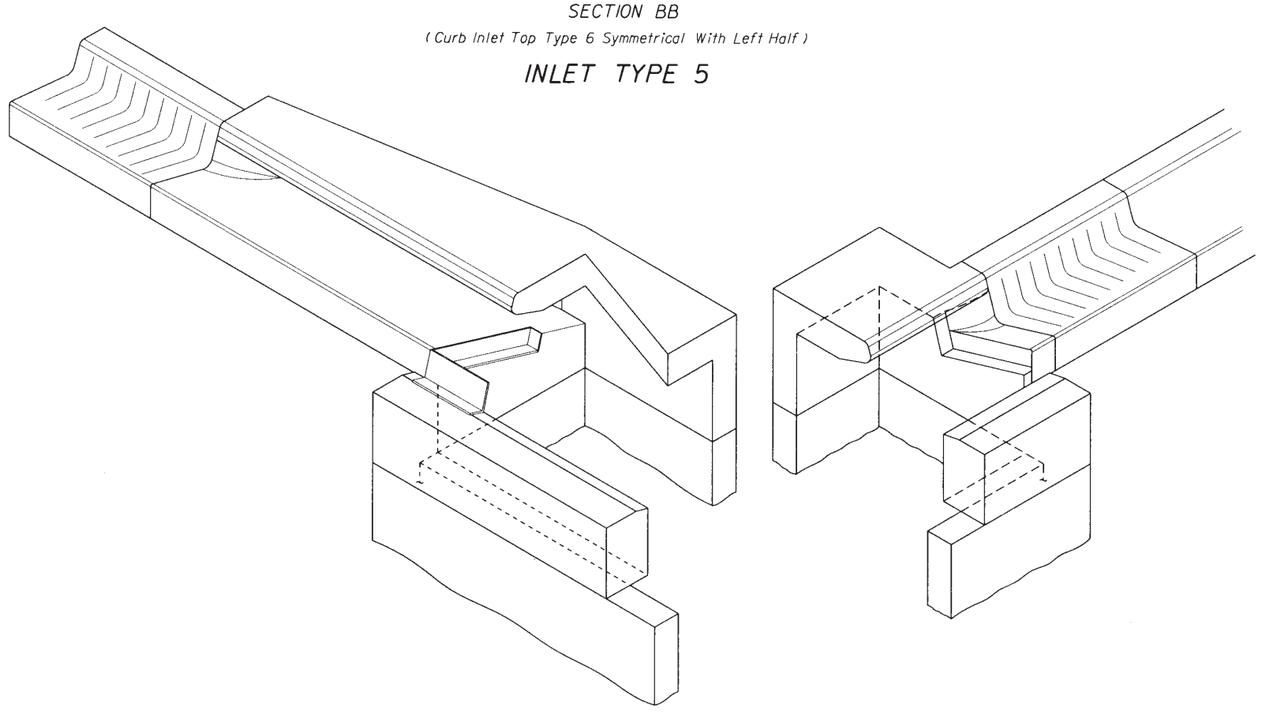

SKETCHS SHOWING FRAME SEAT AND THROAT RECESS

GENERAL NOTES

1. The finished grade and slope of the inlet tops are to conform with the finished cross slope and grade of the proposed sidewalk and/or parkway.
2. When inlets are to be constructed on a curve, refer to the plans to determine the radius and, where necessary, modify the inlet details accordingly. Bend steel when necessary.
3. All reinforcing steel shall have 30 mm minimum cover unless otherwise shown. Inlet tops shall be either cast-in-place or precast concrete.
4. Precasting of this inlet top will be permitted. Precast units shall conform to the dimensions shown or in accordance with approved shop drawings. Request for shop drawing approval shall be directed to the State Drainage Engineer.
5. Concrete meeting the requirements of A.S.T.M. C 478 (27579 kPa) may be used in lieu of Class I concrete for precast units, manufactured in plants which are under the Standard Operating Procedures for the inspection of precast drainage products.
6. The corner fillets shown for rectangular throats are necessary only when throats are to be used in conjunction with circular inlet bottoms or when used on skew with rectangular inlet boxes.
7. For inlet bottoms see Index No. 200.
8. These inlet tops are designed for use with standard curb and gutter Type E and Type F. Locate outside of pedestrian crosswalk where practical.
9. See Index 201 for supplemental details.
10. All steel used for frame and cover shall meet the requirements of ASTM A-36.
11. Either cast iron covers or steel covers may be used. Iron covers shall be Class No. 30 castings in accordance with ASTM A-48.
12. When Alternate "G" Cover is specified in plans either the cast iron cover and galvanized steel frame or the the galvanized steel cover and frame must be used. Covers are to be grouted in accordance with the grouting detail shown on sheet 2 of 2, in lieu of tack welding.
13. Inlet to be paid for under the contract unit price for Inlets (Curb) (Type ___), EA.

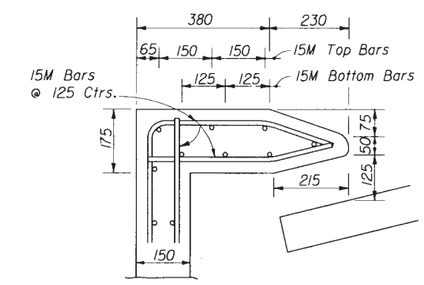

TOP MODIFICATION FOR TYPE E CURB

STATE OF FLORIDA DEPARTMENT OF TRANSPORTATION
ROAD DESIGN

CURB INLET TOPS TYPES 5 & 6

	Names	Dates	Approved By
Designed By			State Drainage Engineer
Drawn By			
Checked By			Revision No. / Sheet No. / Index No.
F.H.W.A. Approved:			94 / 1 of 2 / 211

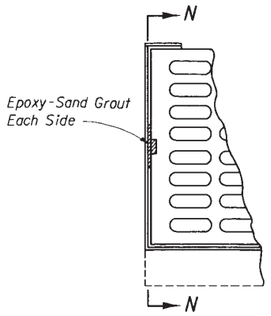

TOP VIEW

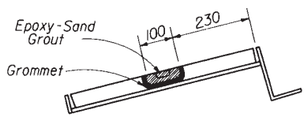

SECTION NN

GROUTING DETAILS

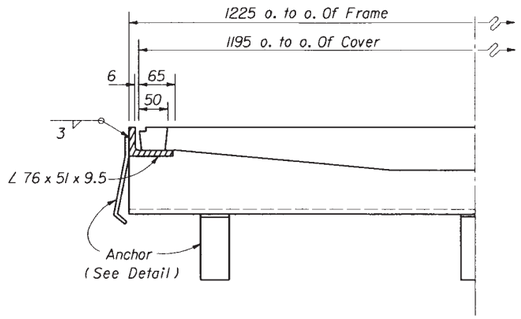

HALF SECTION DD

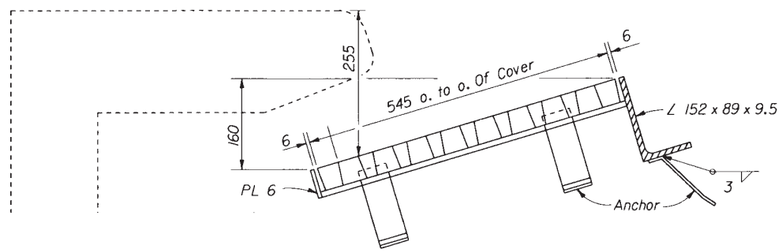

SECTION EE

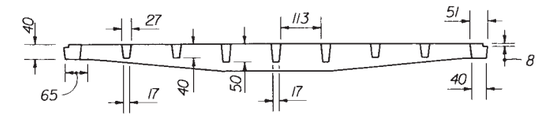

SECTION GG

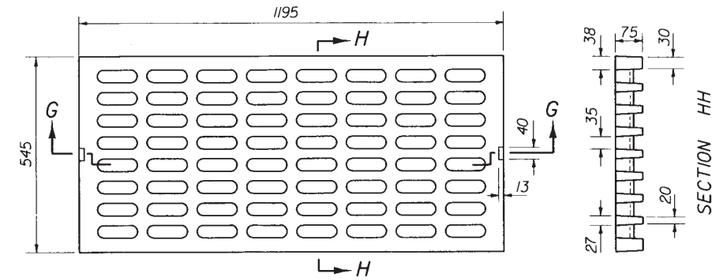

TOP VIEW

SECTION HH

CAST IRON COVER

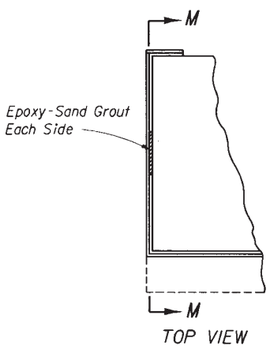

TOP VIEW

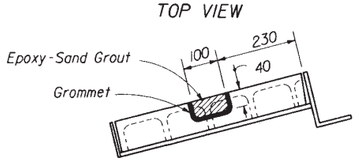

SECTION MM

GROUTING DETAILS

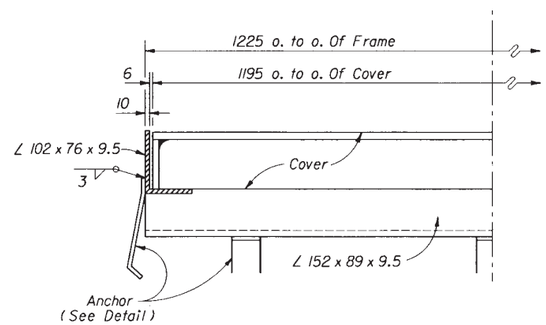

HALF SECTION DD

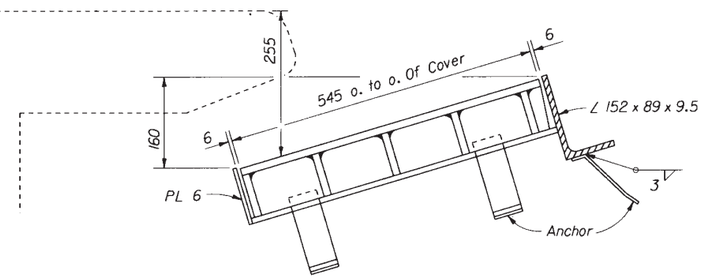

SECTION EE

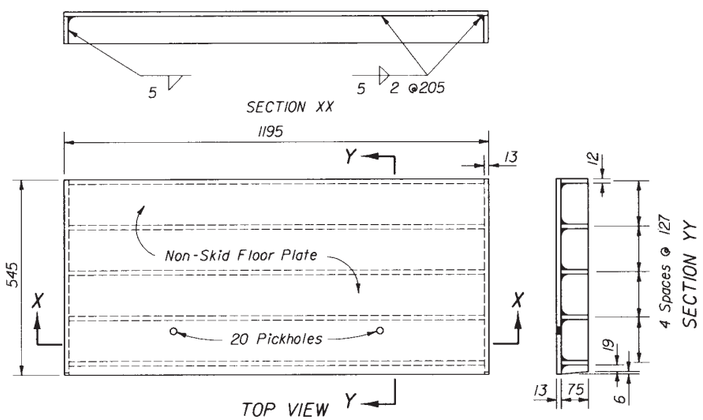

SECTION XX

TOP VIEW

SECTION YY

STEEL COVER

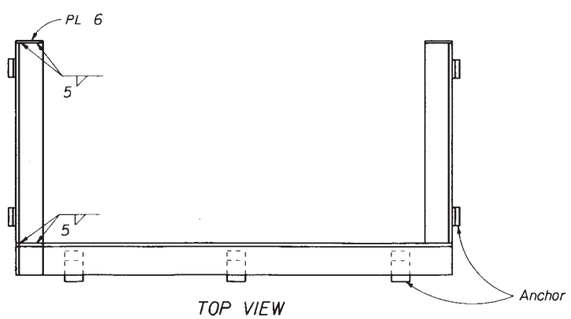

TOP VIEW

FRAME

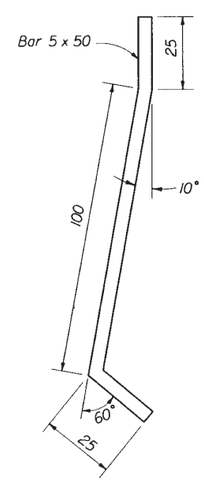

ANCHOR DETAIL

STATE OF FLORIDA DEPARTMENT OF TRANSPORTATION
ROAD DESIGN

CURB INLET TOPS TYPES 5 & 6

	Names	Dates
Designed By		
Drawn By		
Checked By		
F.H.W.A. Approved:		

Approved By: State Drainage Engineer

Revision No.	Sheet No.	Index No.
94	2 of 2	211

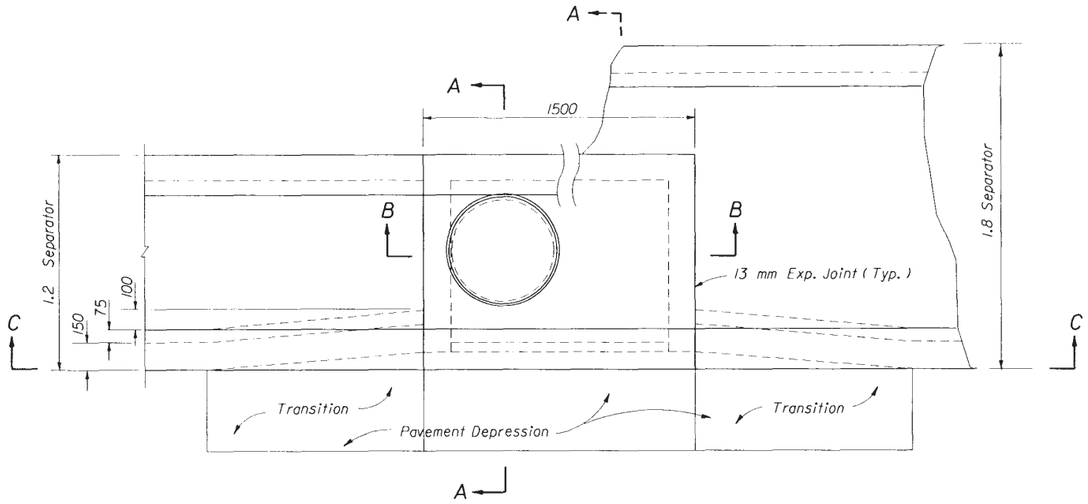

PLAN

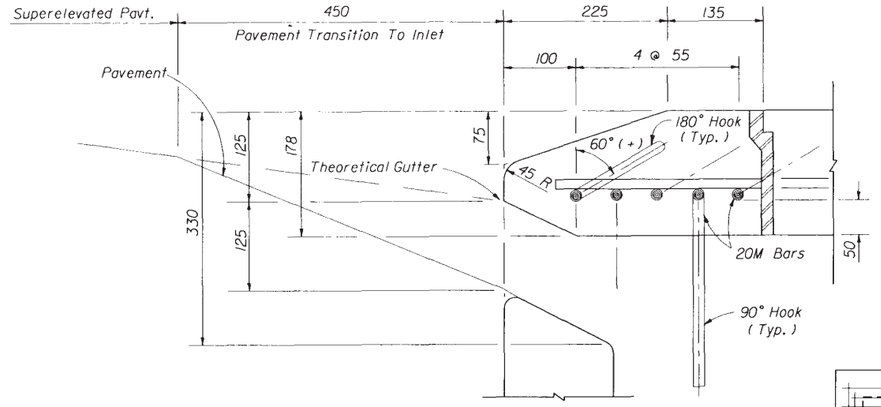

THROAT DETAIL

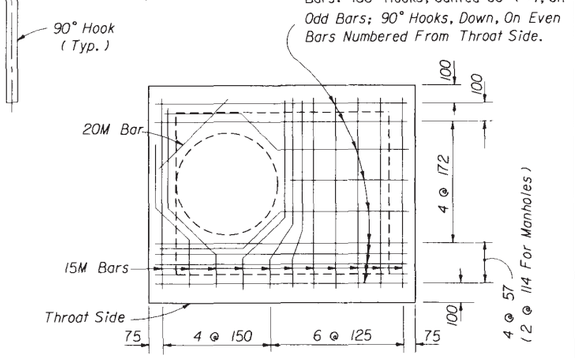

REINFORCING STEEL DIAGRAM
TOP SLAB OF INLETS

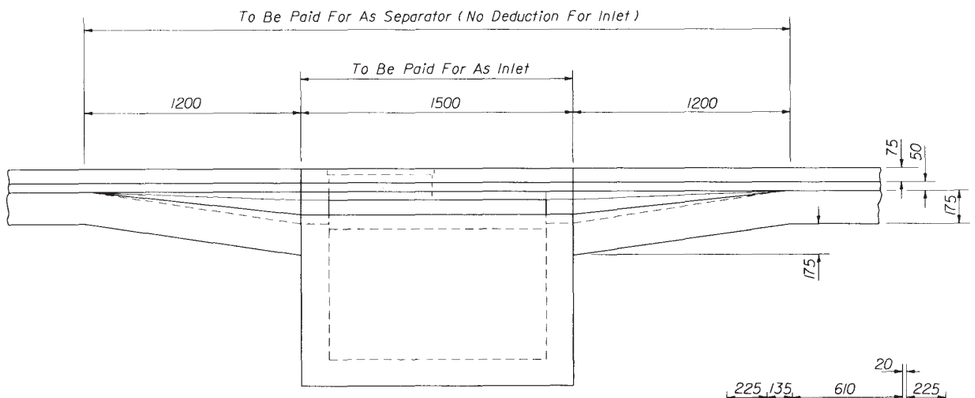

SECTION CC

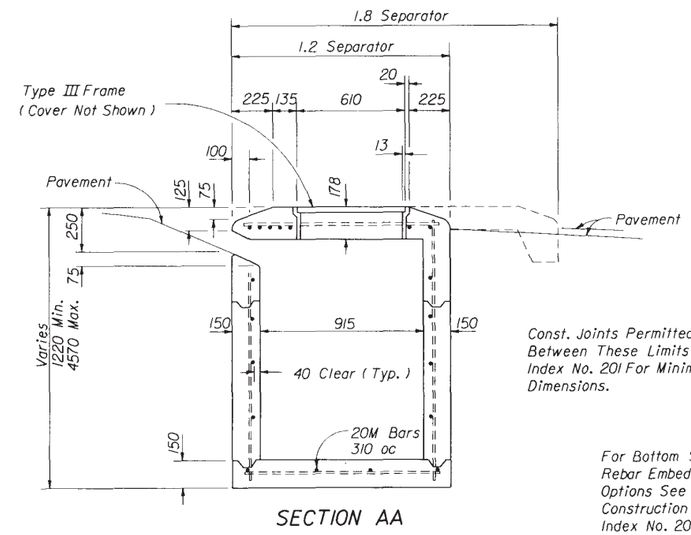

SECTION AA

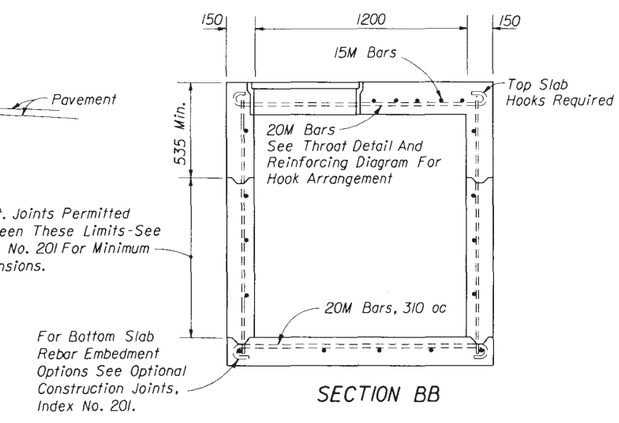

SECTION BB

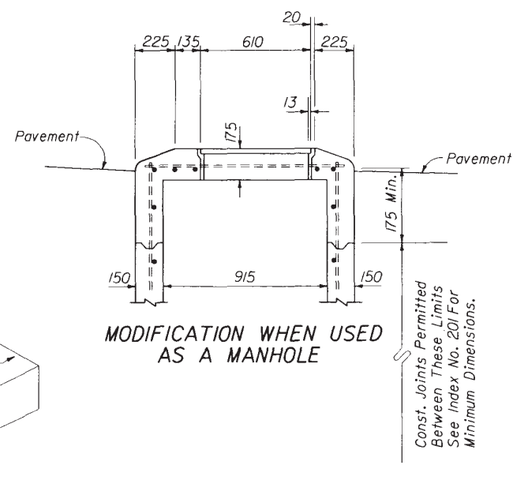

MODIFICATION WHEN USED
AS A MANHOLE

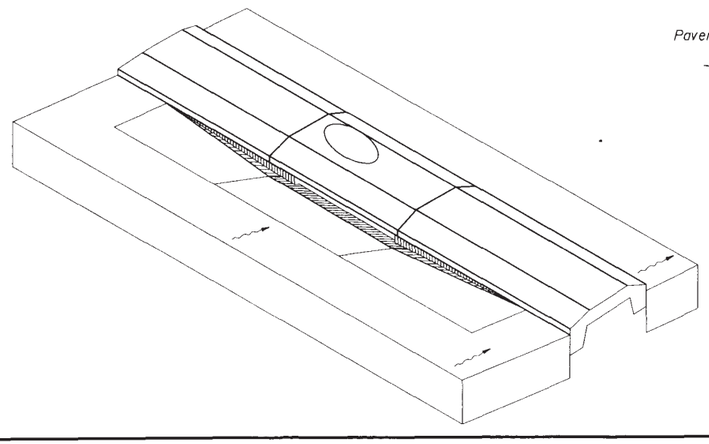

GENERAL NOTES

1. This inlet is used in Traffic Separators Types I and II; or, in separators constructed with Curbs Types A, B and E and sidewalk paving, which cannot accommodate Inlets Types 1, 2, 3, 4, 5 or 6. Use of this Inlet on through traffic side of the separator is not permitted in medians with Curbs Types A and B. Locate inlet outside of pedestrian cross traffic.
2. Reinforcing-15M bars @ 455 mm centers unless otherwise noted. Cut or bend bars out of way of pipe when necessary. Bars to clear pipe by 40 mm.
3. Recommended maximum pipe sizes are 600 mm longitudinal and 750 mm transverse. For larger pipe, inlets with Alt. B bottoms, Index No. 200 are recommended.
4. For supplementary details see Index No. 201.
5. Inlet to be paid for under the contract unit price for Inlets (Curb Type 7), EA.

STATE OF FLORIDA DEPARTMENT OF TRANSPORTATION
ROAD DESIGN

CURB INLET TYPE 7

	Names	Dates	Approved By
Designed By	EGR	08/81	State Drainage Engineer
Drawn By	HSD	08/81	
Checked By	JG	08/81	
F.H.W.A. Approved: 10/08/81			Revision No. 94 · Sheet No. 1 of 1 · Index No. 212

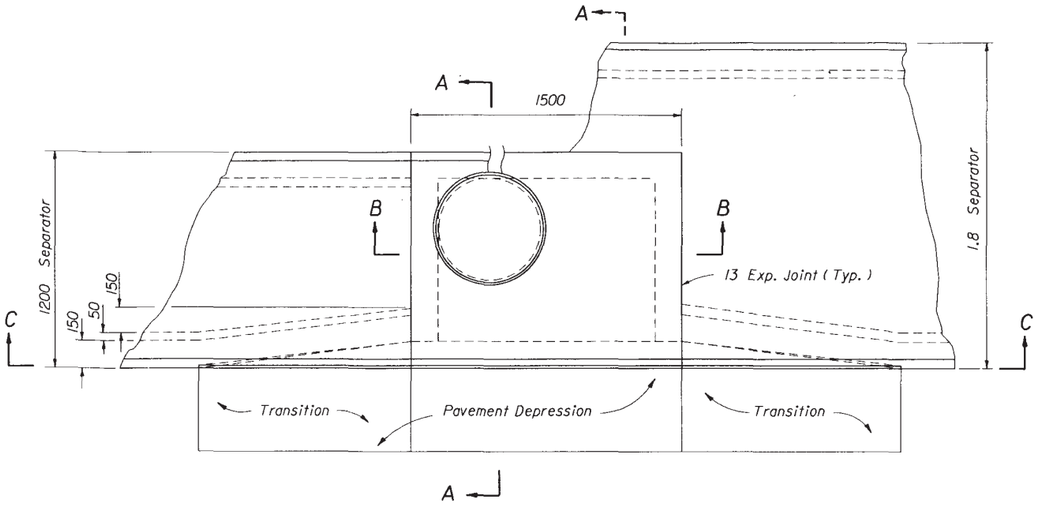

PLAN

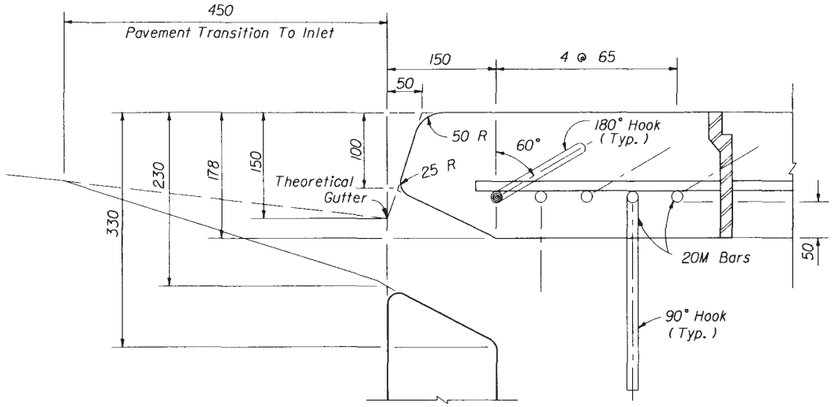

THROAT DETAIL (SECTION AA)

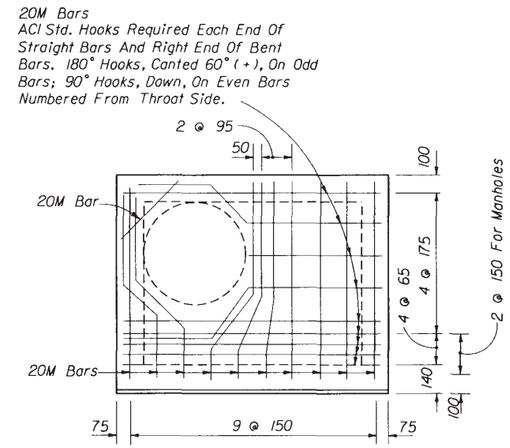

REINFORCING STEEL DIAGRAM
TOP SLAB OF INLET

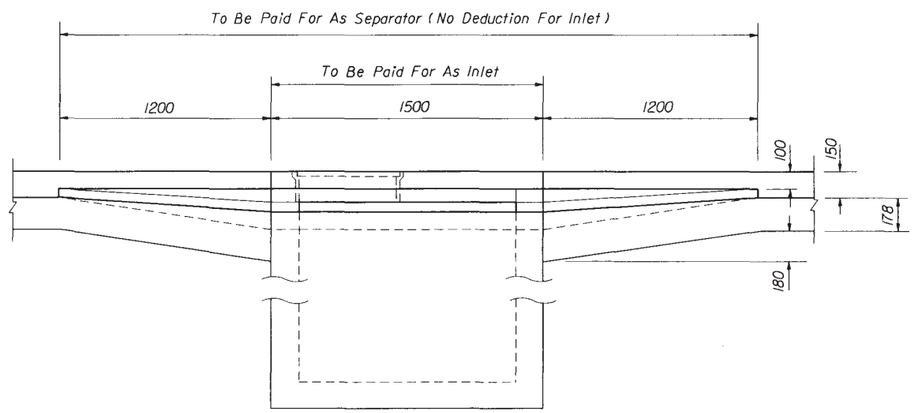

SECTION CC

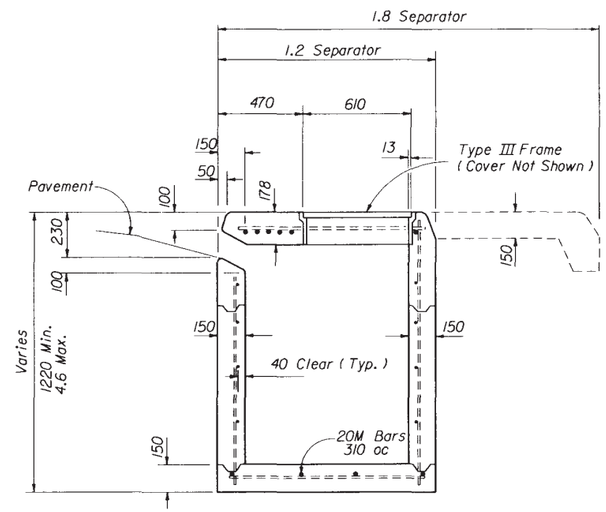

SECTION AA

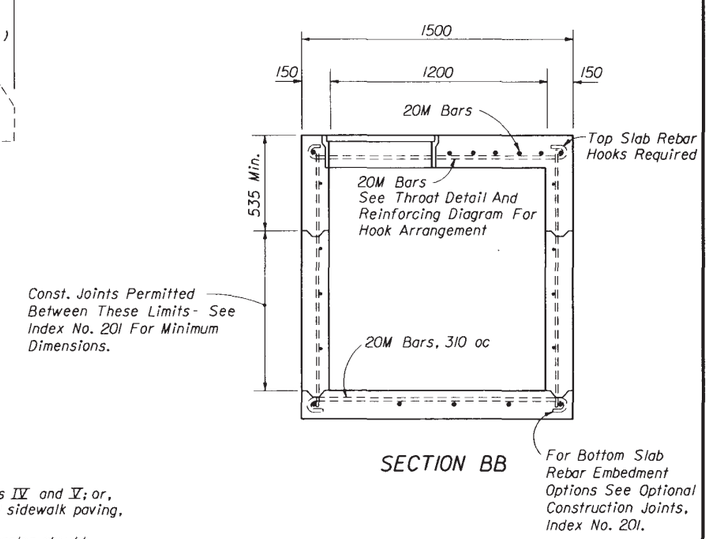

SECTION BB

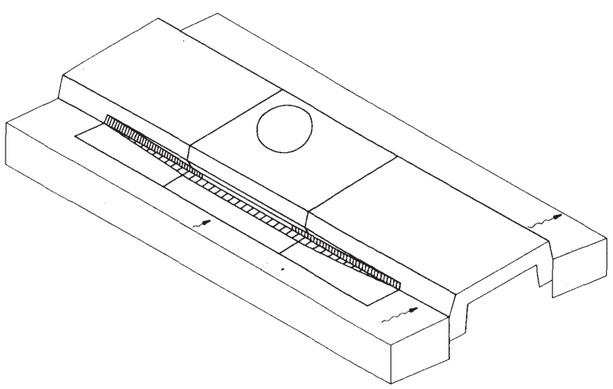

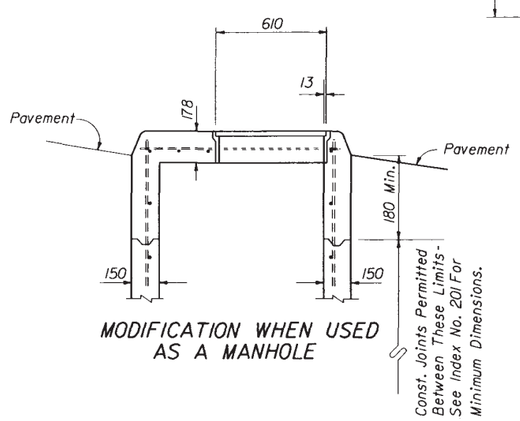

MODIFICATION WHEN USED
AS A MANHOLE

GENERAL NOTES

1. This inlet is to be used only in Traffic Separators Types IV and V; or, in separators constructed with Curbs Types D and F and sidewalk paving, which cannot accommodate Inlets Types 1, 2, 3, 4, 5 or 6. Use of this inlet on the through traffic side of the separator should be avoided in medians constructed with Curb Type D (Curb inlets Types 9 or 10 are recommended). Locate inlet outside of pedestrian cross traffic.
2. Reinforcing- 15M bars at 455 mm centers unless otherwise noted. Cut or bend bars out of way of pipe when necessary. Bars to clear pipe by 40 mm.
3. Recommended maximum pipe sizes are 600 mm longitudinal and 450 mm transverse. For larger pipe, inlets with Alt. B bottoms, Index No. 200 are recommended.
4. For supplemental details see Index No. 201.
5. Inlet to be paid for under the contract unit price for Inlets (Curb Type _), EA.

STATE OF FLORIDA DEPARTMENT OF TRANSPORTATION
ROAD DESIGN

CURB INLET TYPE 8

	Names	Dates
Designed By	EGR	07/81
Drawn By	HSD	07/81
Checked By	JG	07/81
F.H.W.A. Approved:		10/08/81

Approved By S. A. McGenore
State Drainage Engineer

Revision No.	Sheet No.	Index No.
94	1 of 1	213

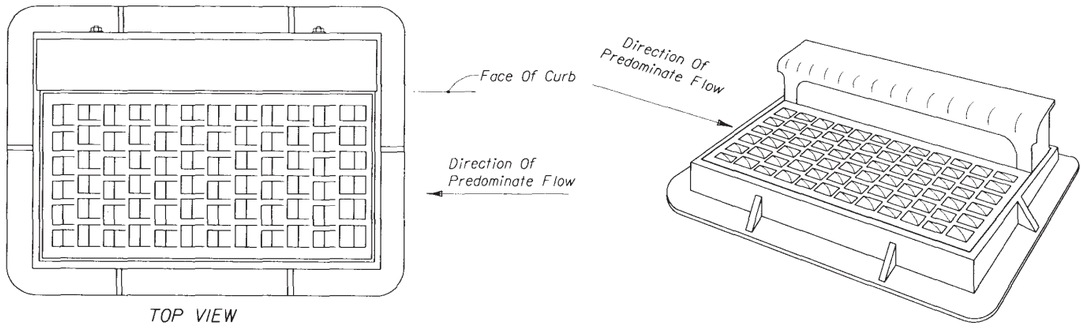

TOP VIEW

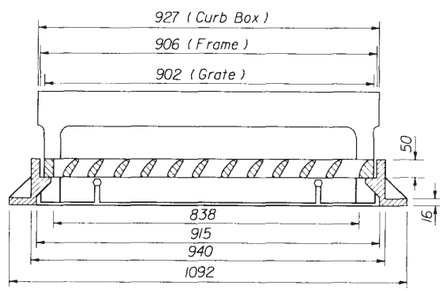

LONGITUDINAL SECTION

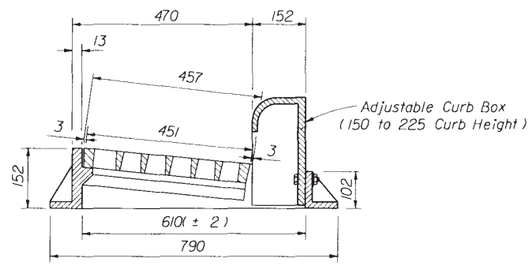

TRANSVERSE SECTION

FRAME AND GRATE

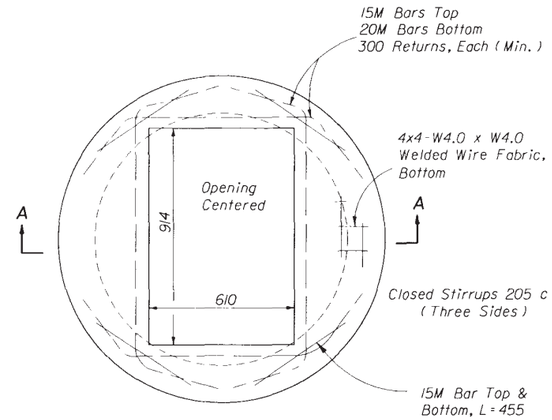

TOP VIEW

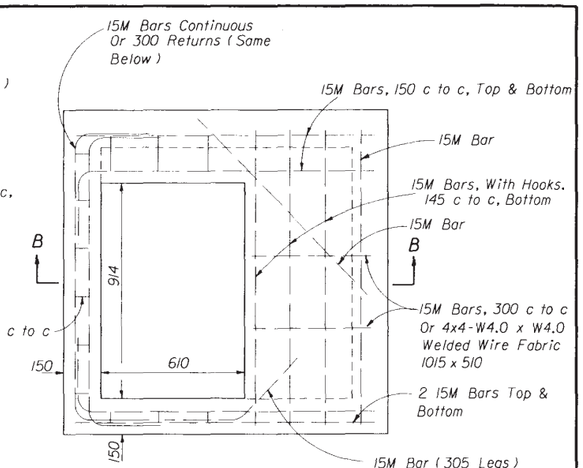

TOP VIEW

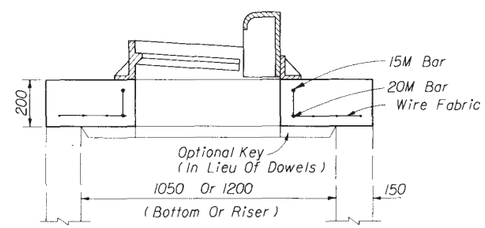

SECTION AA

(SEE NOTE 6 BELOW)

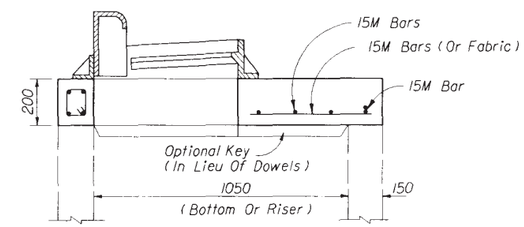

SECTION BB

(SEE NOTE 6 BELOW)

TOP SLABS

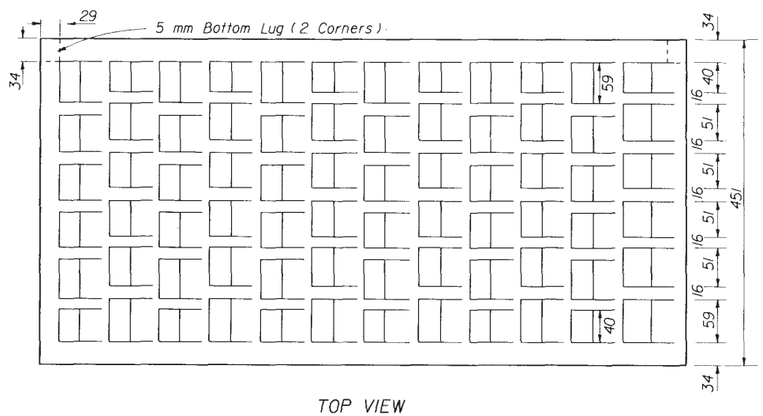

TOP VIEW

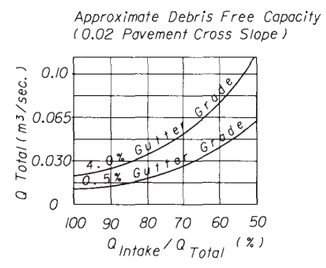

EFFICIENCY CURVE

GENERAL NOTES

1. This inlet is primarily intended for locations with light to moderate flows where right of way does not permit the use of throated Curb Inlets Types 1 through 6. The typical application is on curb returns to city streets. The inlet grate is suitable for pedestrian and bicycle traffic.
2. This inlet to be located in vertical faced curbs such as Curb and Gutter Type F. Grate shall be oriented with vanes directed toward predominate flow. Inlet to be located outside pedestrian crosswalk where practical.
3. For structure bottoms see Index No. 200. For supplemental details see Index No. 201.
4. All steel in slab tops shall have 30 mm minimum cover unless otherwise shown. Tops shall be either cast-in-place or precast concrete.
5. For Alternate B applications, top slab openings shall be placed such that 2 edges of inlet frame will be located directly above bottom wall or riser wall.
6. When used on a structure with dimensions larger than those detailed above and risers are not applied, the top slab shall be constructed using Index 200 with the slab opening adjust to 610 mm x 915 mm. The "Special Top Slab" on Index 200 is not permitted.
7. Frame may be adjusted with one to six courses of brick.
8. Inlet and grate detail shown is U.S. Foundry USF 5130-6016. Vaned grates with approximately equal openings will be permitted that satisfy AASHTO H-20 loading. Inlet and grate shall be Class 30 castings in accordance with ASTM A 48. Grates shall be reversible, right or left.

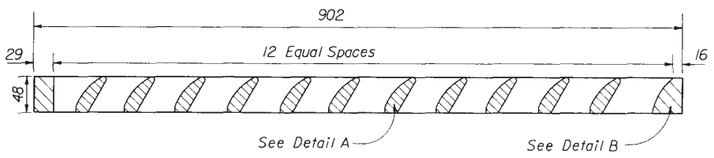

SECTION

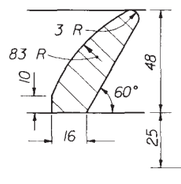

DETAIL A

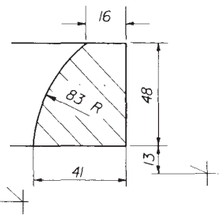

DETAIL B

GRATE DETAIL

STATE OF FLORIDA DEPARTMENT OF TRANSPORTATION
ROAD DESIGN

CURB INLET TOP TYPE 9

	Names	Dates
Designed By	EGR	
Drawn By	HSD	01/81
Checked By	JVG	01/81
F.H.W.A. Approved:		10/08/81

Approved By S. A. McLemore
State Drainage Engineer

Revision No.	Sheet No.	Index No.
94	1 of 1	214

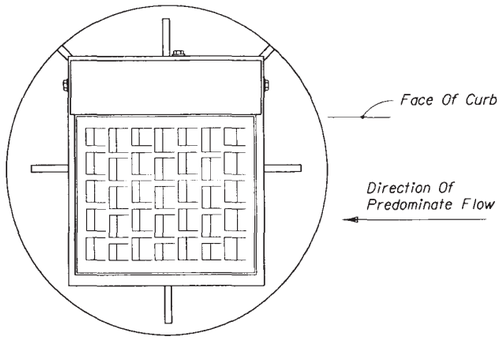

TOP VIEW

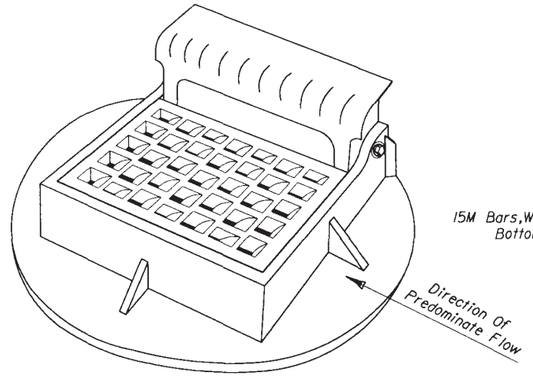

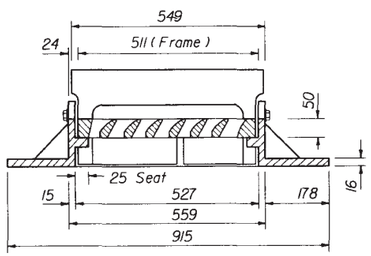

LONGITUDINAL SECTION

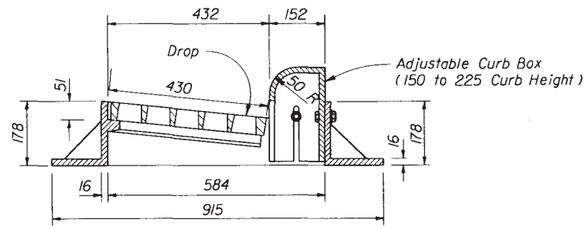

TRANSVERSE SECTION

FRAME AND GRATE

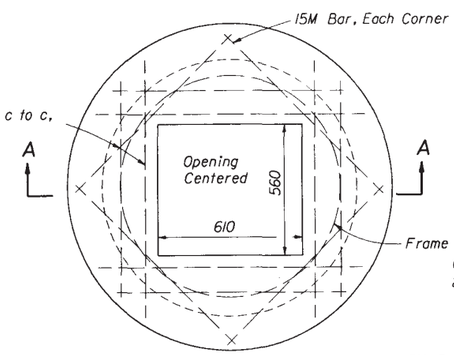

TOP VIEW

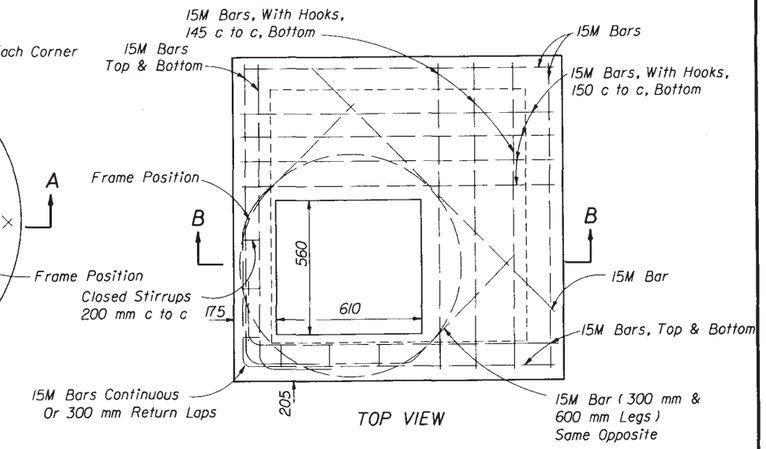

TOP VIEW

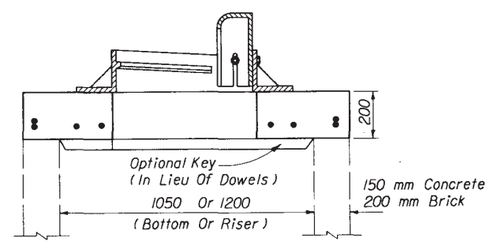

SECTION AA

(SEE NOTE 6 BELOW)

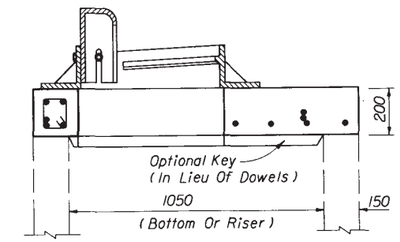

SECTION BB

(SEE NOTE 6 BELOW)

TOP SLABS

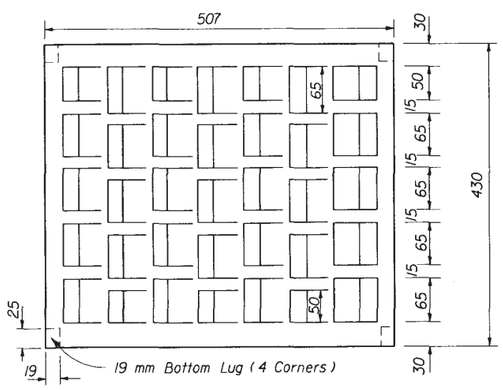

PLAN

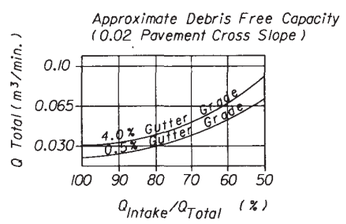

EFFICIENCY CURVE

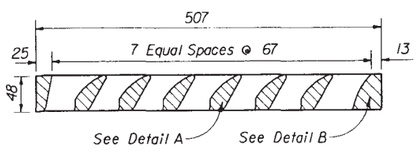

SECTION

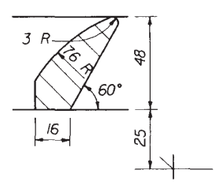

DETAIL A

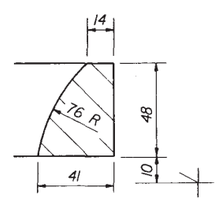

DETAIL B

GRATE DETAIL

GENERAL NOTES

1. This inlet is primarily intended for locations with light flows where right of way does not permit the use of throated Curb Inlets Types 1 through 6. The typical application is on curb returns to city streets. The inlet grate is suitable for pedestrian and bicycle traffic.
2. This inlet to be located in vertical faced curbs such as Curb and Gutter Type F. Grate shall be oriented with vanes directed toward predominate flow. Inlet to be located outside pedestrian crosswalk where practical.
3. For structure bottoms see Index No. 200. For supplemental details see Index No. 201.
4. All steel in slab tops shall have 30 mm minimum cover unless otherwise shown. Tops shall be either cast-in-place or precast concrete.
5. For Alternate B applications, top slab openings shall be placed such that 2 edges of inlet frame will be located directly above bottom or riser walls.
6. When used on a structure with dimensions larger than those detail above and risers are not applied, the top slab shall be constructed using Index 200 with the slab opening adjusted to 610 mm x 915 mm. The "Special Top Slab" on Index 200 is not permitted.
7. Frame may be adjusted with one to six courses of brick.
8. Inlet and grate detail shown is Neenah R-3065-L. Vaned grates with approximately equal openings will be permitted that satisfy AASHTO H-20 loading. Inlet and grate shall be Class 30 castings in accordance with ASTM A 48. Grates shall be reversible, left or right.

STATE OF FLORIDA DEPARTMENT OF TRANSPORTATION
ROAD DESIGN

CURB INLET TOP TYPE 10

	Names	Dates
Designed By	EGR	
Drawn By	HSD	1/81
Checked By	JVG	1/81
F.H.W.A. Approved:		10/ 8/81

Approved By S. A. McFeaters
State Drainage Engineer

Revision No.	Sheet No.	Index No.
94	1 of 1	215

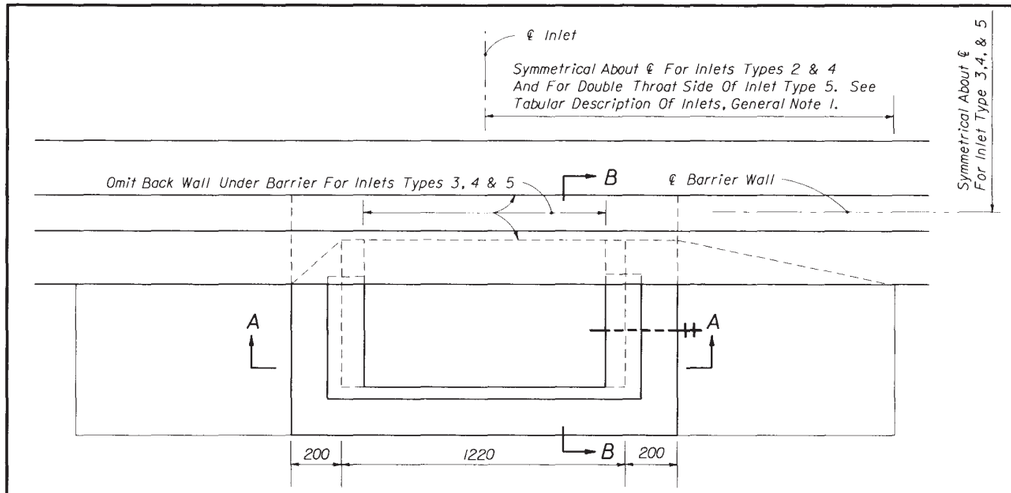

PLAN (INLETS TYPES 1 THRU 5)

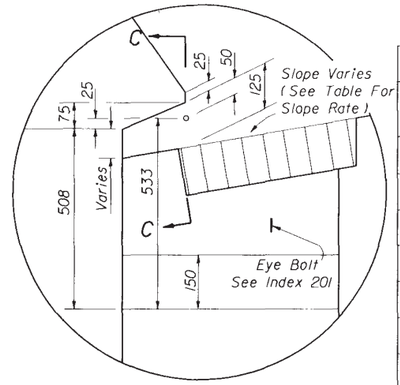

INSET A

GRATE SLOPE		
Shoulder Slope	Grate Slope Rate	Remarks
0.03	1: 6.7	Std. Med. Conc. Shldr.
0.05	1: 6	Std. Med. Flex. Shldr.
0.06	1: 5.6	
0.07	1: 5.2	
0.08	1: 5	
0.09	1: 4.7	
0.10	1: 4.5	e (max)

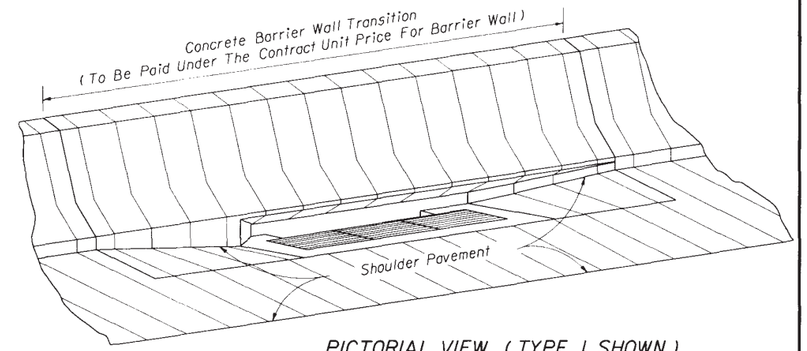

PICTORIAL VIEW (TYPE 1 SHOWN)

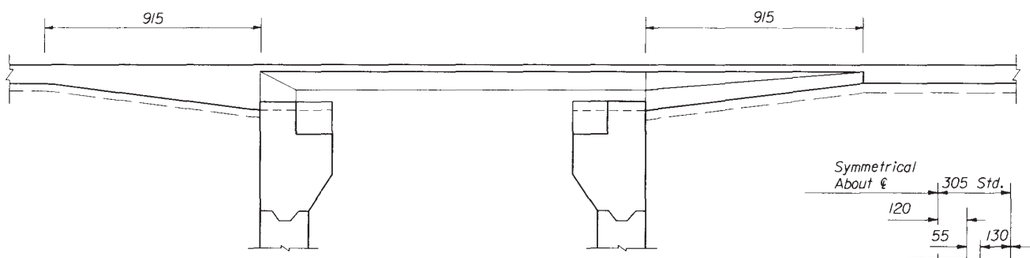

SECTION CC

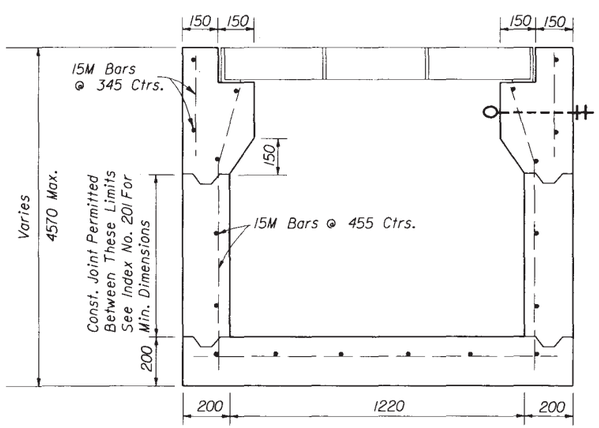

SECTION AA

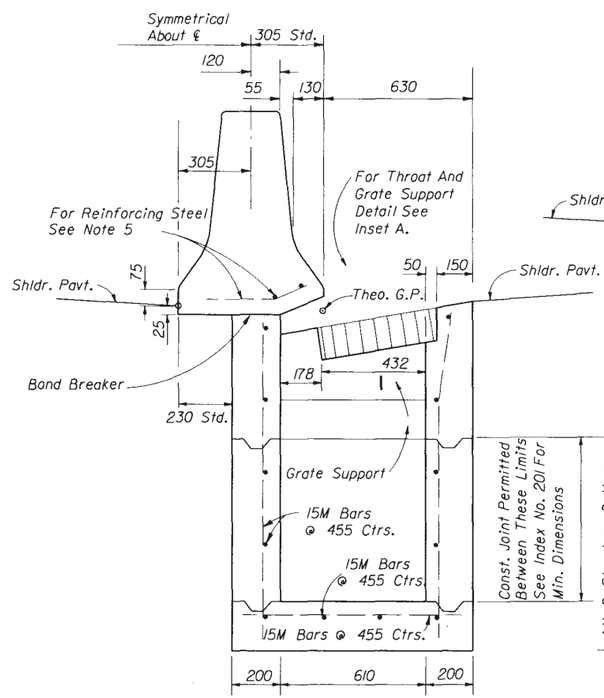

SECTION (INLETS TYPES 1 & 2)

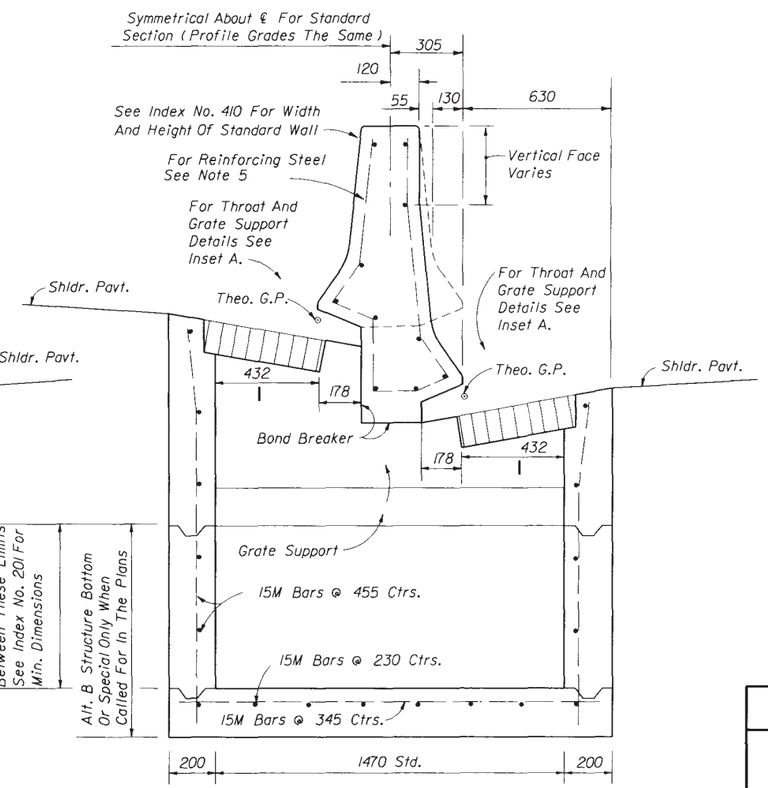

SECTION (INLETS TYPES 3, 4 & 5)
(NON-SYMMETRICAL SECTION SHOWN)

SECTION BB

GENERAL NOTES

1. Inlet Descriptions:
   - Type 1 Single throat, one side of barrier wall.
   - Type 2 Double throats, one side of barrier wall.
   - Type 3 Two single throats, opposite sides of barrier wall.
   - Type 4 Two double throats, opposite sides of barrier wall.
   - Type 5 Double throats, one side of barrier wall, and single throat other side of barrier wall.
2. For grate details see Index No. 220. The parallel bar grate shall be used unless the reticuline grate is called for in the plans. The reticuline grate shall be specified where bicycle traffic is anticipated.
3. For standard concrete barrier wall dimensions, and for dimensions of concrete barrier wall incorporating light standards within the wall, see Index No. 410.
4. Reinforcing steel shall have 50 mm minimum cover.
5. All reinforcing steel 15M bars. Longitudinal steel bars extend over full length of concrete barrier wall transition. Tie bars @ 455 mm ctrs. Reinforcing to be paid for under the contract unit price for Barrier Wall Conc., MI.
6. For supplemental details see Index No. 201.
7. Inlets to be paid for under the contract unit price for Inlets (Median Barrier Type ___) EA. Barrier wall to be paid for under the contract unit price for Barrier Wall Conc., MI.

STATE OF FLORIDA DEPARTMENT OF TRANSPORTATION
ROAD DESIGN

MEDIAN BARRIER INLETS TYPES 1, 2, 3, 4 & 5

	Names	Dates	Approved By
Designed By			S. A. McLemore, State Drainage Engineer
Drawn By	HSD	06/83	
Checked By	JVG/JBW	07/83	
F.H.W.A. Approved: 10/06/83			

Revision No.	Sheet No.	Index No.
94	1 of 1	217

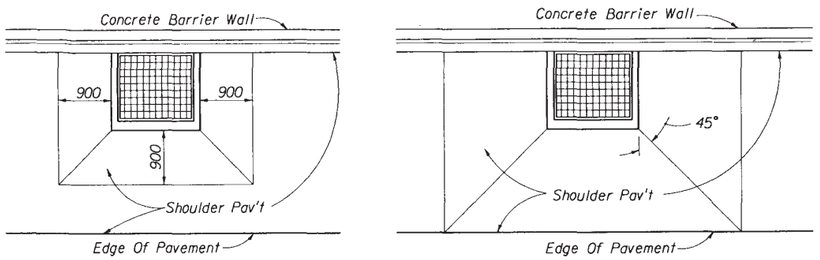

LOW SIDE SUPERELEVATION HIGH SIDE TRANSITION

PAVEMENT WARP FOR SHOULDERS IN SUPERELEVATION

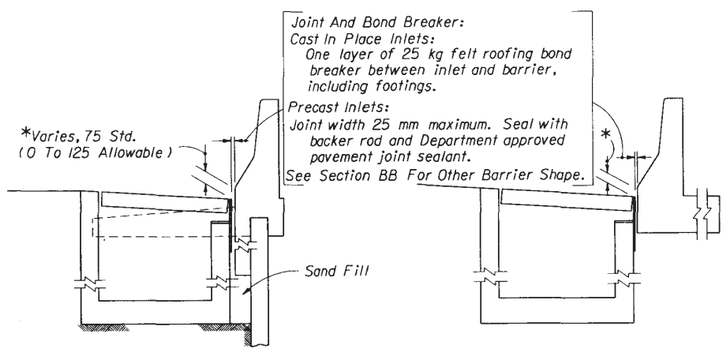

BARRIER WALL / RETAINING WALL SINGLE FACE ROADWAY BARRIER

INLET SECTION AT WALLS

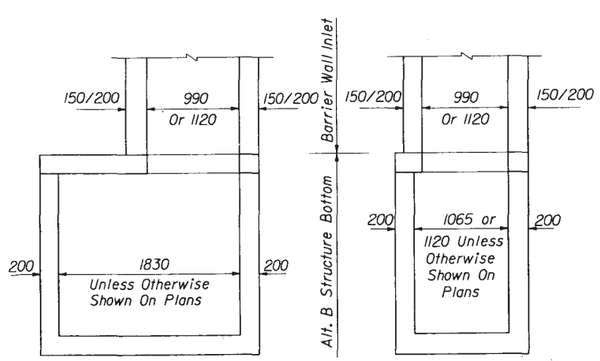

Note: Alt. B Structure Bottom Only. See Index No. 200.

INLET WITH STRUCTURE BOTTOM

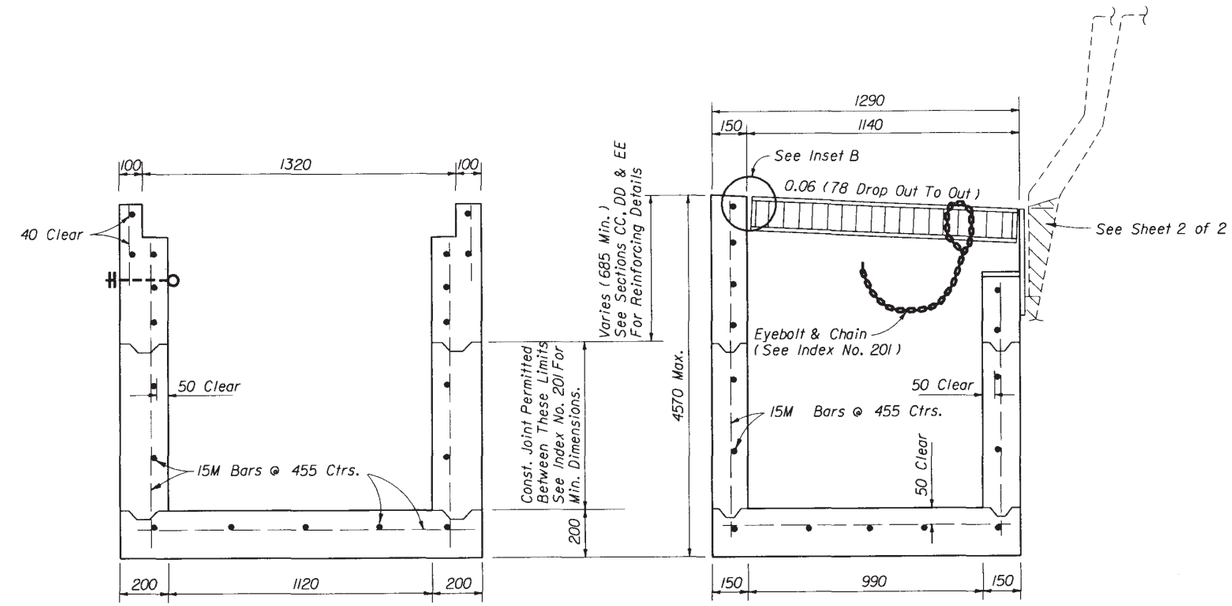

SECTION AA (WITHOUT GRATE) SECTION BB

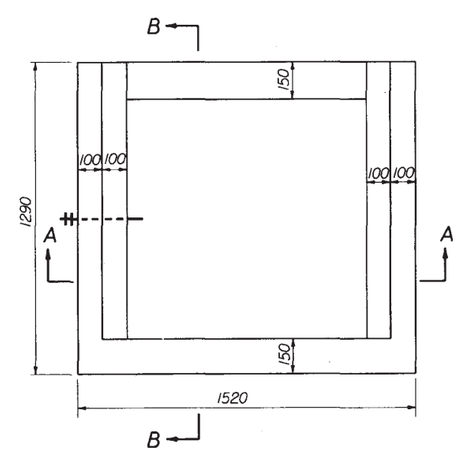

TOP VIEW (WITHOUT GRATE)

GENERAL NOTES

1. This inlet is primarily intended for use adjacent to concrete barrier walls on paved shoulders. Use of the inlet adjacent to other wall types shall be approved by the Drainage Engineer. The inlet is suitable for bicycle and occasional pedestrian traffic. It is not intended for use in curb and gutter or other areas where throated inlets are required, nor areas subject to high debris.
2. Inlets located in embankments constructed with earth anchored retaining wall shall be designed with minimum depths to reduce adverse impact on the anchorage system. Runs of pipe parallel to and near anchored wall shall be avoided wherever practical. Special coordination must be exercised during the design and construction of storm water systems within anchored wall systems.
3. Inlet bottoms and/or tops may be either precast or cast-in-place. Whether cast as a single unit or as multiple segments, and whether precast or cast-in-place, the upper 685 mm of the inlet shall be reinforced in accordance with sections CC, DD and EE.
4. Exposed edges shall be chamfered 20 mm.
5. When Alternate G grate is specified in the plans, the grate is to be hot dipped galvanized after fabrication. Field installation of the filler bar called for in Inset B will not be permitted, thereby requiring tolerance adjustment during fabrication and/or casting, or, matching grate to structure prior to galvanizing.
6. For supplemental details see Index Nos. 200 and 201.
7. Inlets to be paid for under the contract unit price for Inlets (Barrier Wall), EA.

STATE OF FLORIDA DEPARTMENT OF TRANSPORTATION
ROAD DESIGN

BARRIER WALL INLET

	Names	Dates
Designed By	JVG/EGR	09/86
Drawn By	HSD	09/86
Checked By	JVG	09/86
F.H.W.A. Approved: 11/07/86		

Approved By S. D. McGuire
State Drainage Engineer

Revision No.	Sheet No.	Index No.
94	1 of 2	218

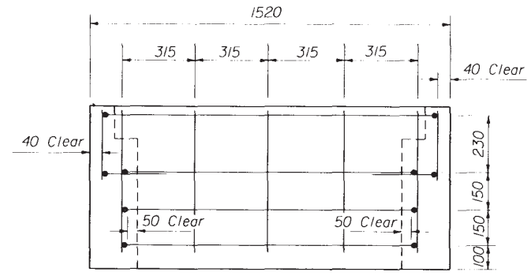

SECTION CC

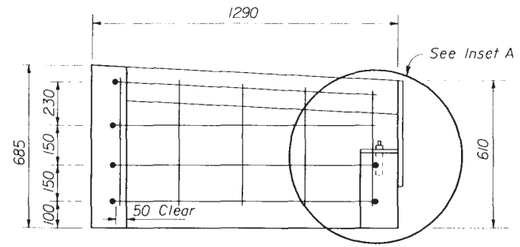

SECTION DD

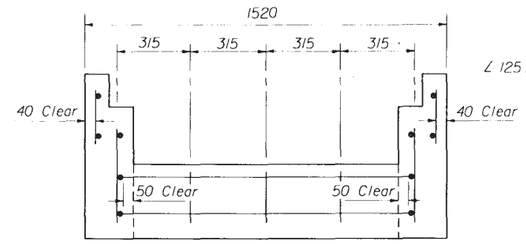

SECTION EE

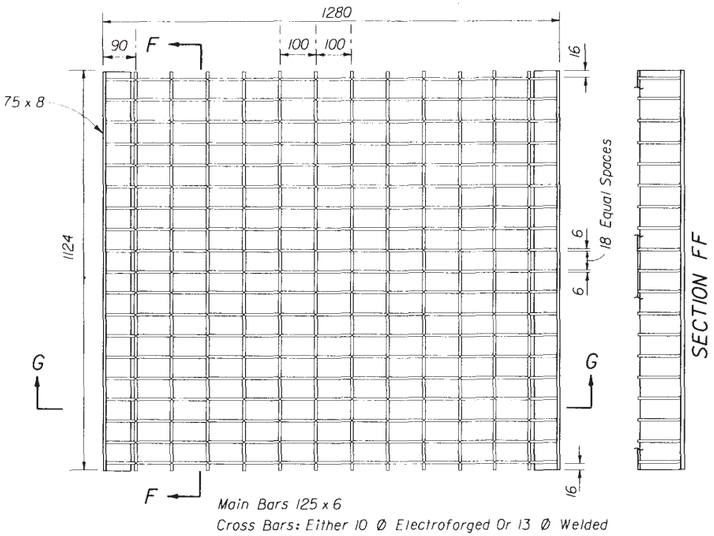

TOP VIEW

SECTION FF

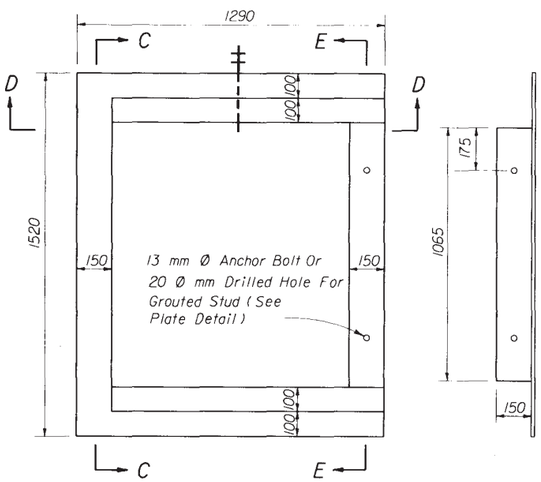

TOP VIEW OF INLET WITHOUT GRATE

TOP VIEW OF METAL PLATE

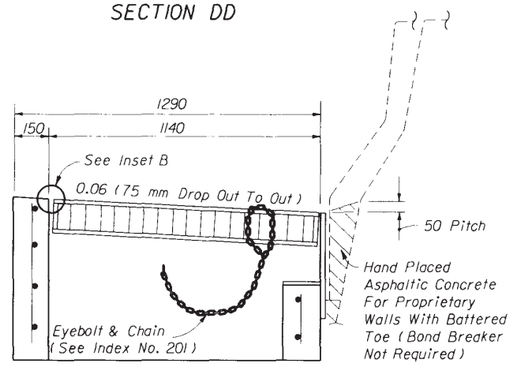

TRANSVERSE SECTION WITH GRATE & PLATE

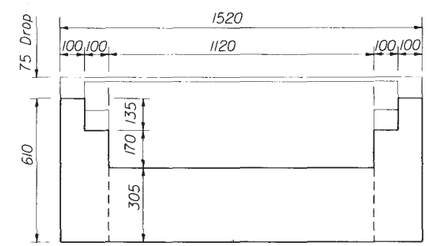

BACK VIEW WITHOUT BACK PLATE

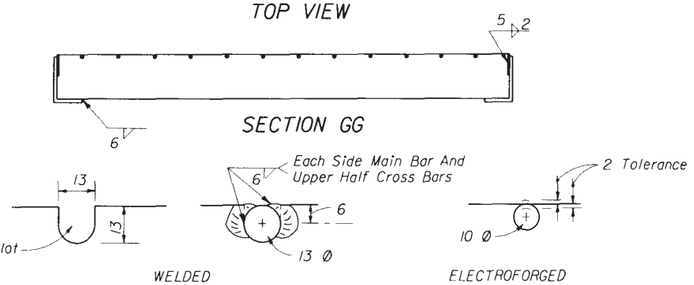

SECTION GG

CROSS BAR OPTIONS

STEEL GRATE

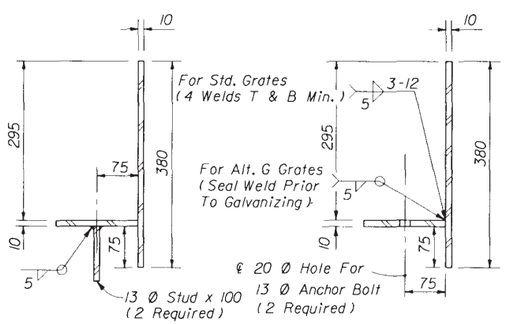

OPTION FOR GROUT STUD

OPTION FOR IMBEDDED ANCHOR

TRANSVERSE SECTIONS THRU BACKWALL PLATE

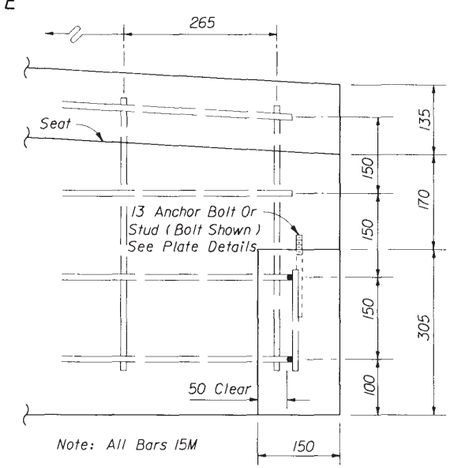

INSET A

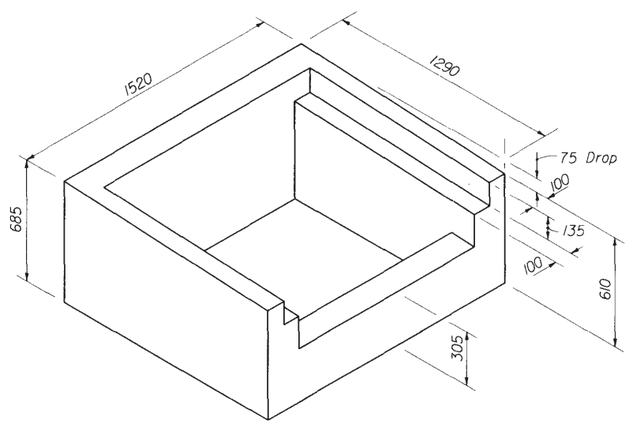

PICTORIAL VIEW

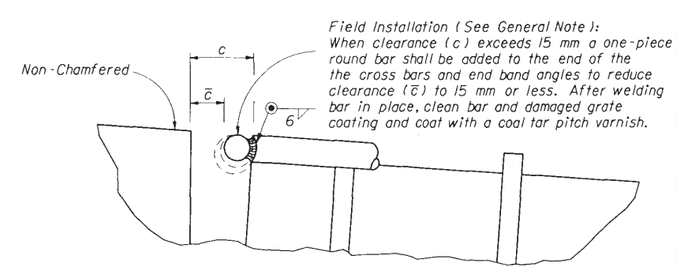

INSET B

STATE OF FLORIDA DEPARTMENT OF TRANSPORTATION
ROAD DESIGN

BARRIER WALL INLET

	Names	Dates
Designed By	JVG/EGR	09/86
Drawn By	HSD	09/86
Checked By	JVG	09/86
F.H.W.A. Approved:		11/07/86

Approved By S. A. McLemore
State Drainage Engineer

Revision No.	Sheet No.	Index No.
94	2 of 2	218

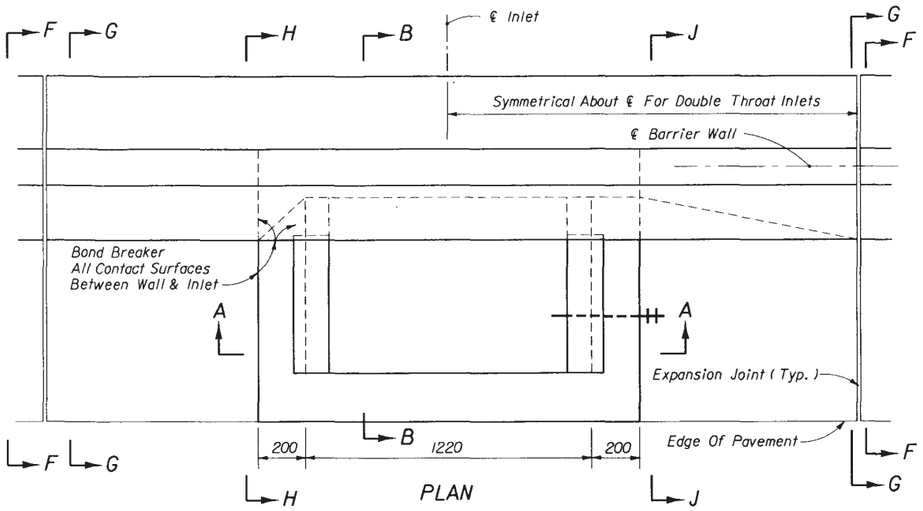

PLAN

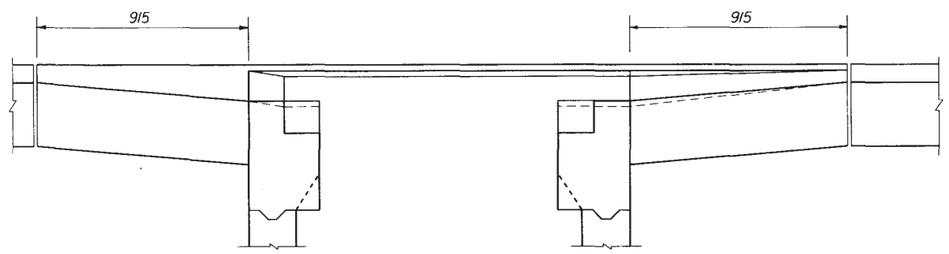

SECTION CC

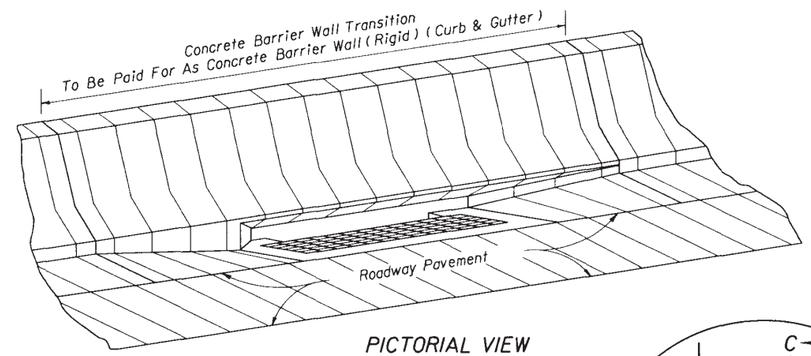

PICTORIAL VIEW

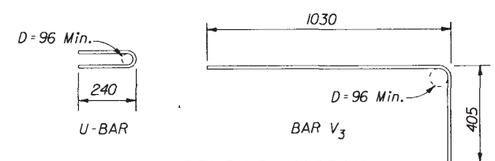

BENDING DIAGRAM

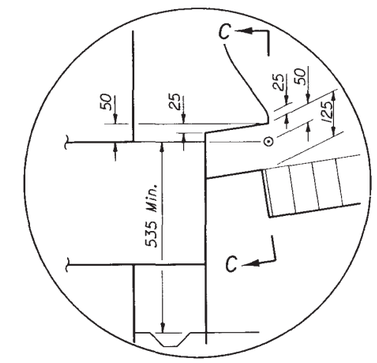

INSET A

GENERAL NOTES

1. This inlet to be used in conjunction with Concrete Barrier Wall (Rigid) (Curb & Gutter), Index No. 410.
2. All Concrete Barrier Wall reinforcing steel 15M bars. Reinforcing shall have 50 mm min. cover unless otherwise shown. Cost to be included in the cost for barrier wall.
3. Barrier wall shall be Class II concrete, finished in accordance with Index No. 410.
4. A flat 455 mm x 65 mm drainage slot shall be constructed at the inlet centerline when the inlet is located in a curb sag. No more than one V_1 bar, one V_3 bar and one U-bar are to be deleted for construction of the drainage slot.
5. For supplemental details see Index Nos. 201, 209 and 410.
6. Recommended maximum pipe sizes are 450 mm longitudinal and 750 mm transverse. For larger pipe, use Alt. B bottoms, Index No. 200.
7. Grates can be fabricated with reticuline bars or with either 10 mm Ø electroforged or 7.3 mm Ø welded cross bars and full depth bars as detailed.
8. When Alternate G grate is specified in plans, the grate is to be hot dipped galvanized after fabrication.
9. For pay item purposes the height of the structure shall be computed using the theoretical gutter elevation, less the flow line elevation of the lowest pipe or to top of sump floor.
10. Inlets to be paid for under the contract unit price for Inlets (Barrier Wall Rigid Curb & Gutter), EA.

    Barrier wall to be paid for under the contract unit price for Barrier Wall Conc. (Rigid-Curb & Gutter), MI.

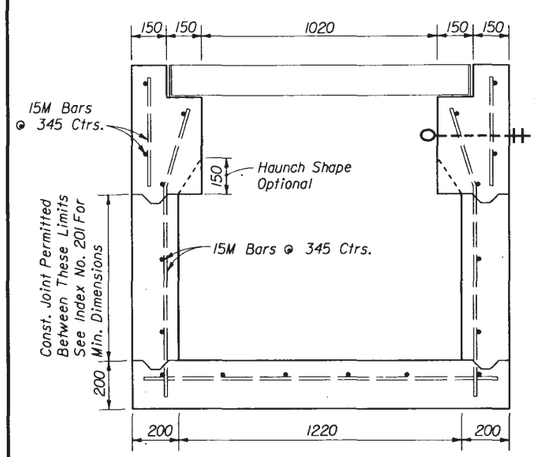

SECTION AA

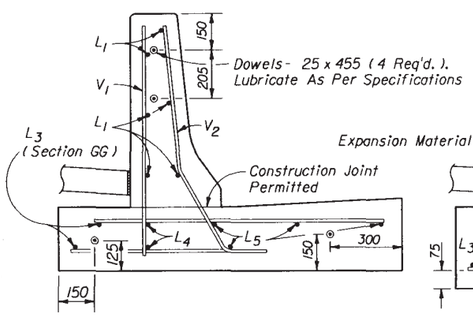

Note: For SECTION FF and additional details see Index No. 410, 'CONCRETE BARRIER WALL (RIGID) (CURB & GUTTER) '

SECTION FF & GG

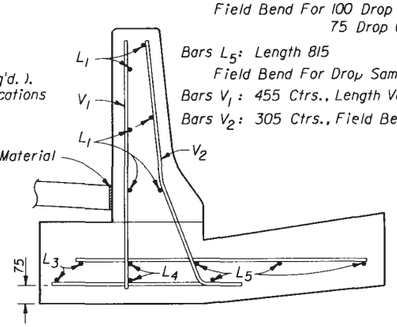

SECTION HH

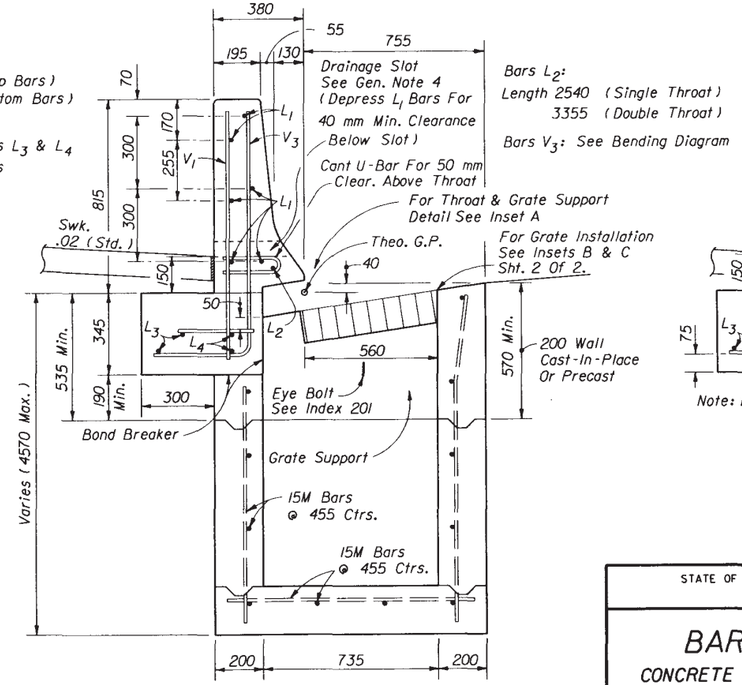

SECTION BB

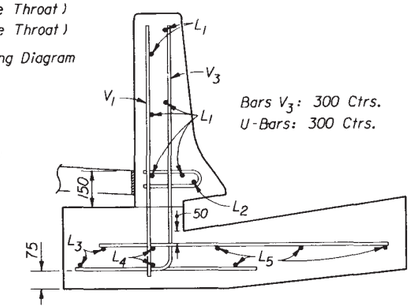

Note: Replaces Section HH for double throat inlet.

SECTION JJ

STATE OF FLORIDA DEPARTMENT OF TRANSPORTATION
ROAD DESIGN

BARRIER WALL INLET

CONCRETE BARRIER WALL (RIGID) (C & G)

	Names	Dates
Designed By	EGR/JVG	9/89
Drawn By	JBW	9/89
Checked By	EGR/JVG	9/89

F.H.W.A. Approved:

Approved By S A McLemore
State Drainage Engineer

Revision No.	Sheet No.	Index No.
94	1 of 2	219

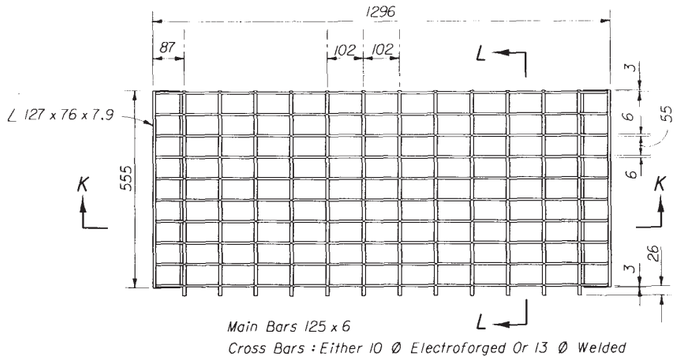

PLAN

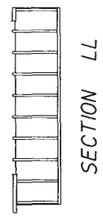

SECTION LL

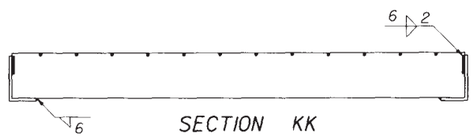

SECTION KK

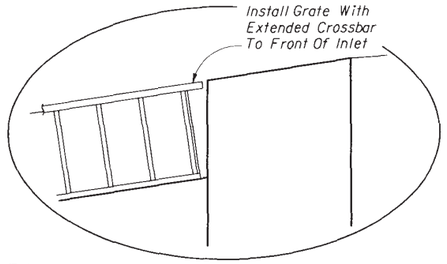

INSET B

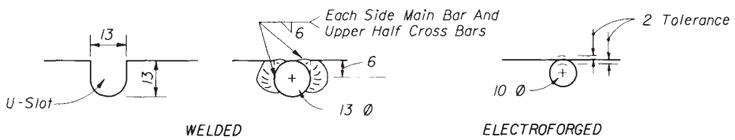

WELDED

ELECTROFORGED

CROSS BAR OPTIONS

CROSS BAR

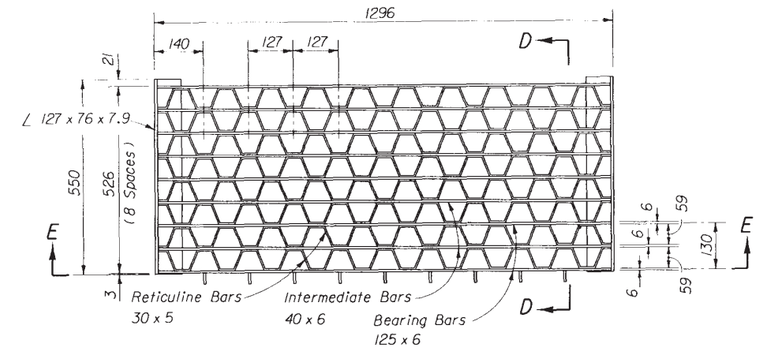

PLAN

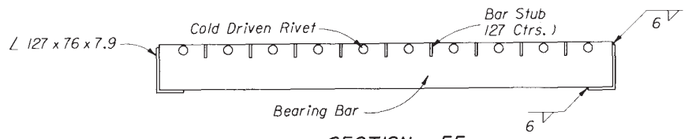

SECTION EE

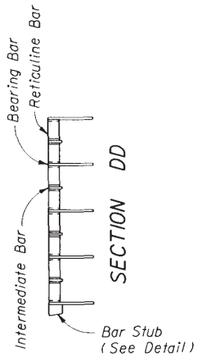

SECTION DD

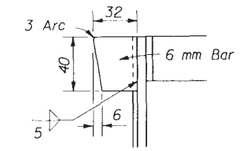

BAR STUB

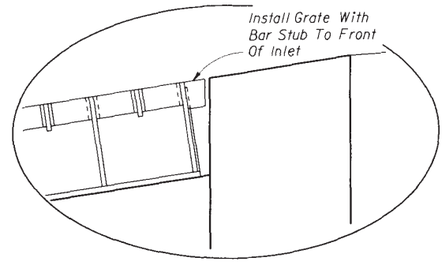

INSET C

RETICULINE

OPTIONAL STEEL GRATES

STATE OF FLORIDA DEPARTMENT OF TRANSPORTATION
ROAD DESIGN

BARRIER WALL INLET

CONCRETE BARRIER WALL (RIGID) (C & G)

	Names	Dates
Designed By	EGR/JVG	9/89
Drawn By	JBW	9/89
Checked By	EGR/JVG	9/89

Approved By _____ State Drainage Engineer

Revision No.	Sheet No.	Index No.
94	2 of 2	219

F.H.W.A. Approved:

RECOMMENDED MAXIMUM PIPE SIZES	
INLET INSIDE WIDTH (mm)	PIPE SIZE (mm)
890	600
1220	900

Note: Recommended sizes are for concrete pipe. Sizes for other types of pipe must be verified for fit in accordance with Index No. 201. For larger pipe see bottom detail right and Index No. 200.

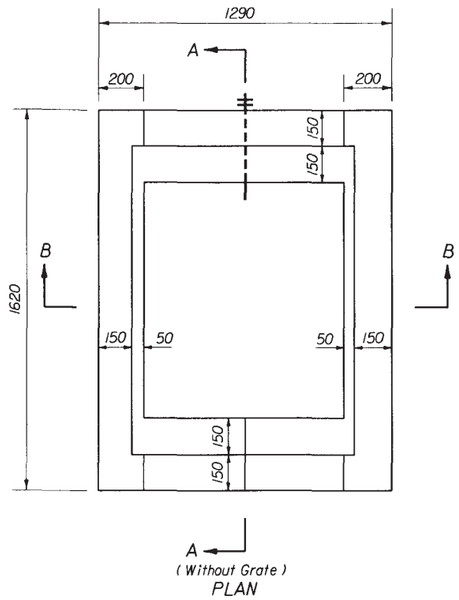

PLAN

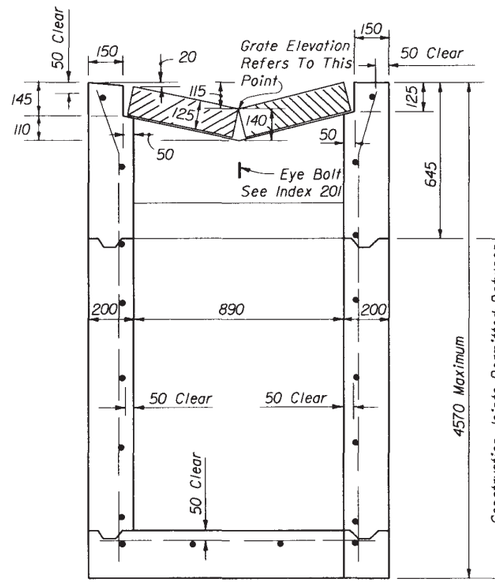

SECTION BB

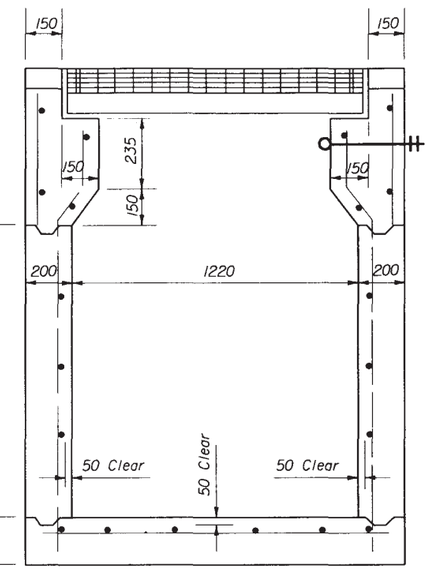

SECTION AA

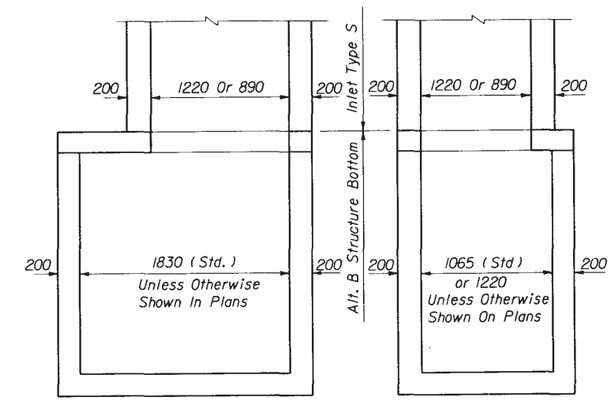

NOTE: Alt. B Structure Bottom Only. See Index No. 200

INLET WITH STRUCTURE BOTTOM

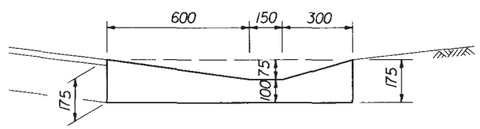

SECTION DD

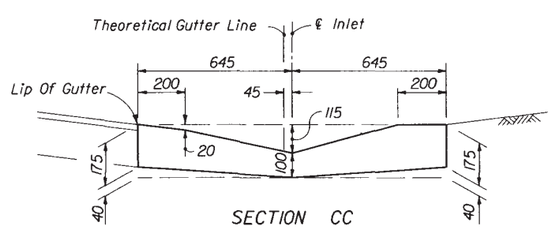

SECTION CC

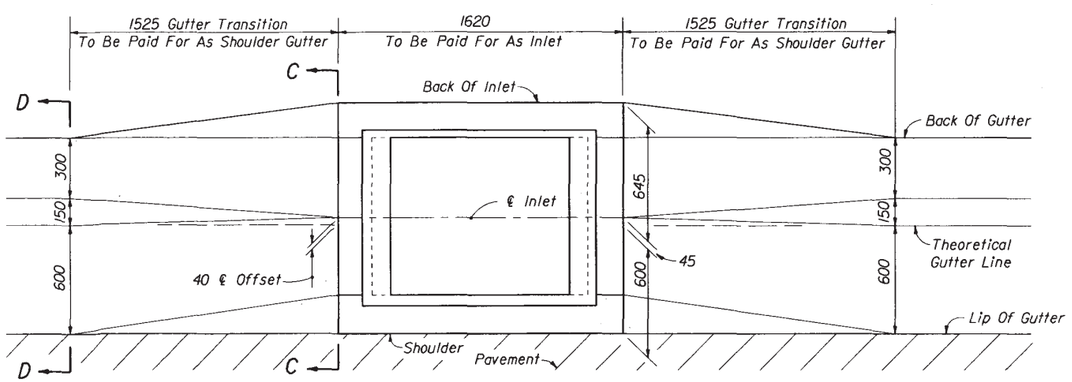

SHOULDER GUTTER TRANSITION

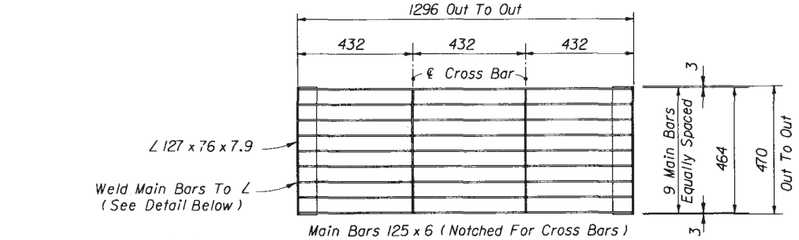

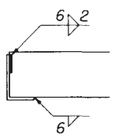

DETAIL

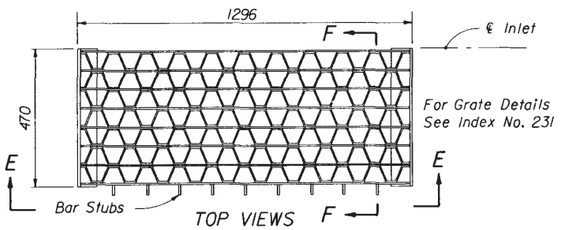

TOP VIEWS

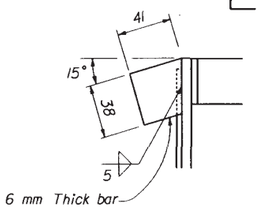

DETAIL OF BAR STUB

SECTION EE

SECTION FF

STEEL GRATE

GENERAL NOTES

1. This inlet with parallel bar grate shall be used for limited access facilities and other bicycle restricted facilities subject to heavy loads; and, may be used in locations where inlets Type A and B, with wide grate openings, are unacceptable. On limited access facilites with designated bicycle access and on all other facilities, including roads overpassing limited access highways, the reticuline grate shall be used.
2. All reinforcing steel 15M bars at 455 mm centers both ways with 50 mm clearance to inside of walls and bottom. Bars to be cut or bent for 40 mm minimum clearance around pipe.
3. All exposed edges and corners shall be tooled to 20 mm radius.
4. When Alternate G grate is specified in plans, the grate is to be hot dipped galvanized after fabrication.
5. For supplementary details see Index Nos. 200 and 201.

STATE OF FLORIDA DEPARTMENT OF TRANSPORTATION
ROAD DESIGN

GUTTER INLET TYPE S

	Names	Dates	Approved By: A. A. McLenore, State Drainage Engineer		
Designed By					
Drawn By					
Checked By			Revision No.	Sheet No.	Index No.
F.H.W.A. Approved:		05/01/75	94	1 of 1	220

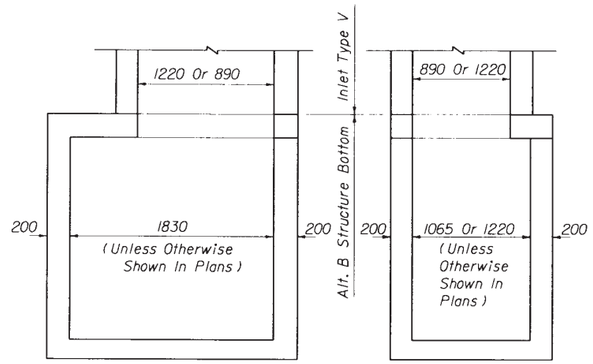

NOTE: Alt. B Structure Bottom Only. See Index No. 200

(For Pipes 750 Dia. And Larger)

INLET WITH STRUCTURE BOTTOM

GENERAL NOTES

1. This inlet is designed for village swales, ditches, or other areas subject to heavy wheel loads, minimum debris and subject to pedestrian and/or bicycle traffic.
2. When alternate "G" grate is specified in plans, the grate is to be hot dipped galvanized after fabrication.
3. Reinforcing - 15M bars at 455 mm ctrs. both ways. Cut or bend bars out of way of pipe to clear pipe 40.
4. All exposed edges and corners shall be tooled to 6 mm radius.
5. Recommended maximum pipe sizes shown are for concrete pipe.
6. For supplementary details see Index No. 201.

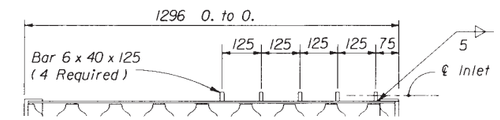

OPTIONAL BAR SPACING

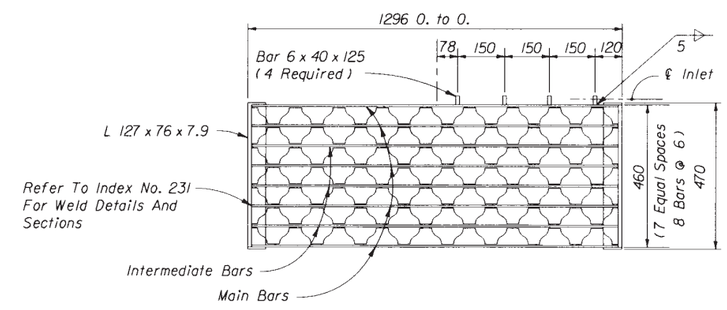

STEEL GRATE

TWO REQUIRED PER INLET

125 mm Steel Grate — Main Bars 125 mm x 6 mm

Intermediate Bars 40 mm x 6 mm — Reticuline Bars 30 mm x 5 mm

Steel Grate : Manufactured By Borden, Florida Steel, U.S. Foundry Irving, Reliance, Greulich (Or Equal).

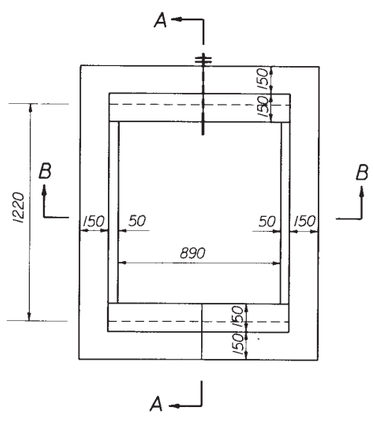

PLAN

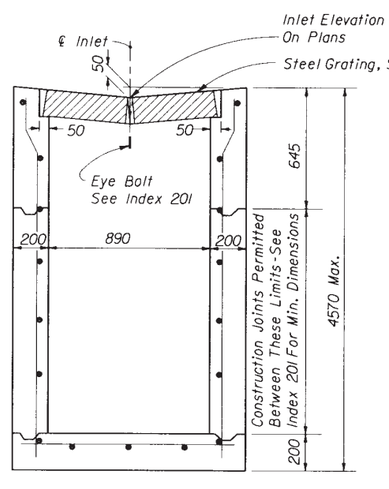

SECTION BB

Recomended Maximum Pipe Size:

890 Wall - 600 Size

1220 Wall - 900 Size

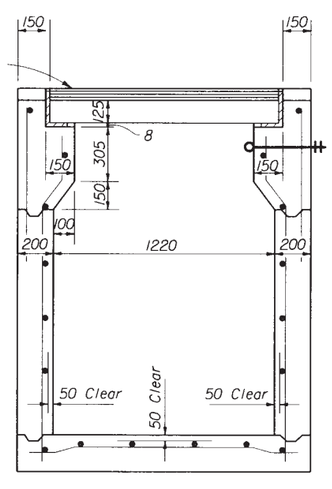

SECTION AA

STATE OF FLORIDA DEPARTMENT OF TRANSPORTATION
ROAD DESIGN

GUTTER INLET TYPE V

	Names	Dates
Designed By		
Drawn By	WHW	4/57
Checked By	RMM	4/57
F.H.W.A. Approved:		5/1/75

Approved By S. A. McLemore
State Drainage Engineer

Revision No.	Sheet No.	Index No.
94	1 of 1	221

APPLICATION GUIDELINES FOR DITCH BOTTOM AND MEDIAN INLETS

INDEX NO.	TYPE	LOCATION	CAPACITY (m^3/m) GRATE ONLY FLOW CONDITION A	GRATE ONLY FLOW CONDITION B	GRATE WITH SINGLE STD. SLOT FLOW CONDITION A	GRATE WITH SINGLE STD. SLOT FLOW CONDITION B	GRATE WITH SINGLE TRAV. SLOT FLOW CONDITION A	GRATE WITH SINGLE TRAV. SLOT FLOW CONDITION B	SAFETY TRAFFIC	SAFETY PEDESTRIAN	SAFETY BICYCLE	DEBRIS TOLERANCE	PIPE SIZE LIMITATION INLET INSIDE WIDTH	PIPE SIZE LIMITATION MAXIMUM PIPE SIZE	OTHER DESIGN CONSIDERATIONS
230	A	Limited Access Facilities	12	7	NA	NA	NA	NA	Heavy Wheel Loads	No	No	Good	610 940	450 600	
231	B	Limited Access Facilities	27	10	NA	NA	NA	NA	Heavy Wheel Loads	No	No	Excellent	1120 1270	750 900	
232	C	*Outside CZ	9	7	19	14	12	9	Infrequent Traffic	Yes	Yes	Poor*	610 940	450 600	* See Note 4. For back of sidewalk location see Index No. 282
	D	*Outside CZ	24	10	46	9	34	14	Infrequent Traffic	Yes	Yes	Poor*	940 1245	600 900	* See Note 4.
	E	*Outside CZ	17	10	32	22	24	12	Infrequent Traffic	Yes	Yes	Poor*	915 1370	600 1050	* See Note 4.
	H	Outside CZ	9	12	41	24	NA	NA	Infrequent Traffic	Yes	Yes	Poor*	915 2340	600 1650 Or 2-750	* See Note 4.
233	F	Inside CZ	15	9	NA	NA	NA	NA	Heavy Wheel Loads	Yes	Yes	Poor	610 1220	450 900	
	G	Inside CZ	39	12	NA	NA	NA	NA	Heavy Wheel Loads	Yes	Yes	Poor	1320 1525	900 1050	
234	J	Inside CZ	15	7	NA	NA	NA	NA	Heavy Wheel Loads	Yes	No	Fair	890 1220	600 900	
235	K	Outside CZ	NA	NA	NA	NA	NA	NA	NA	NA	NA	Good	1120 See Index	900	Debris buildup may occur on Type B fencing.

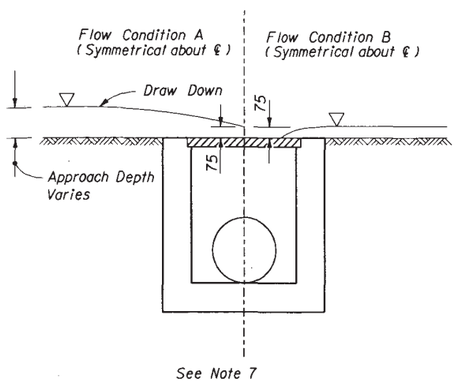

GENERAL NOTES

1. All inlets must be selected to satisfy hydraulic suitability, with proper consideration given to safety and economics.
2. CZ denotes clear zone, formerly CRA denoting clear recovery area.
3. Alternate G grates should be specified when in salt water environment.
4. Inlets without slots or inlets with traversable slots maybe located within the clear zone. Inlets C, D and E capacity and debris tolerance may be increased by the addition of a slot. Slotted inlets located within roadway clear zones and in areas accessible to pedestrians shall have traversable slots. Traversable slots are not adaptable to inlet Type H.
5. Special ditch blocks require plan details.
6. Pipe size limitations are based on circular Class III, B Wall, Concrete Pipe. Elliptical pipe and corrugated pipe are to be checked for fit in accordance with Index No. 201; metal pipe sizes should be reviewed using 67 mm x 13 mm corrugation up through 750 mm and 75 mm x 25 mm corrugation for larger sizes.
7. The capacity values shown are approximate and are intended as a guide to assist in describing relative performance. Inlets are assumed to be in a sag condition (No Bypass Flow). The effects of vortex flow have not been considered. Inlet control is assumed. The Designer must verify the outlet conditions and design assumptions before accepting the capacity values shown; outlet constraints are likely to control with minimum pipe sizes.

Flow condition A - Orifice Flow Conditions

1. Grates are 50% blocked with 75 mm of water depth above the grate.
2. Slots are 25% blocked.
3. Orifice Equation: $Q = 0.67\ A\ \sqrt{2gH}$

Flow Condition B - Weir Flow Conditions

1. A 75 mm head above the top of the inlet is assumed.
2. The effective weir length is assumed to be equal to the inlet perimeter with no deduction for the grate or debris.
3. For inlets with slots, the effective head for the side of the inlet with the slot is 375 mm for standard 300 mm slots and 250 mm for traversable slots. The slot is assumed to be 25% blocked. In some instances the flow will be in orifice conditions into the slot.
4. Weir Equation: $Q = 3.0\ LH^{3/2}$

Note: NA = Not Applicable

STATE OF FLORIDA DEPARTMENT OF TRANSPORTATION
ROAD DESIGN

DITCH BOTTOM AND MEDIAN INLET APPLICATION GUIDE

	Names	Dates
Designed By	EGR	09/06/84
Drawn By	HSD	09/06/84
Checked By	EGR	09/06/84
F.H.W.A. Approved:		09/21/84

Approved By
State Drainage Engineer

Revision No.	Sheet No.	Index No.
94	1 of 1	229

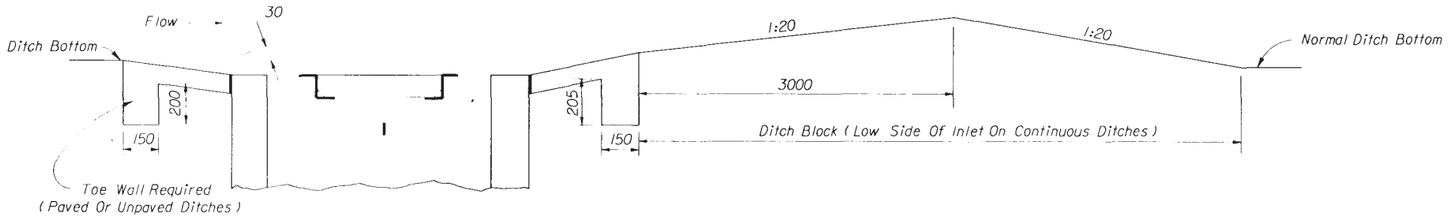

SECTION DD

RECOMMENDED MAXIMUM PIPE SIZES	
INLET INSIDE WIDTH (mm)	PIPE SIZE (mm)
610	450
940	600

Note: Recommended sizes are for concrete pipe. Sizes for other types of pipe must be verified for fit in accordance with Index No. 201. For larger pipe see bottom detail right and Index No. 200.

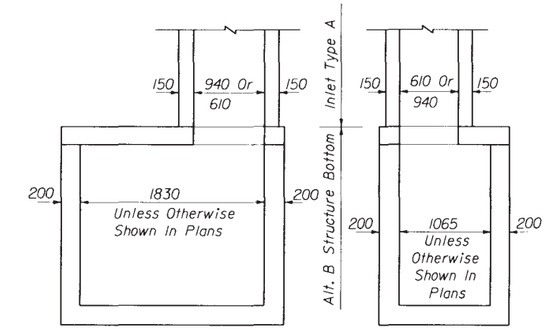

NOTE: Alt. B Structure Bottom Only. See Index No. 200

INLET WITH STRUCTURE BOTTOM

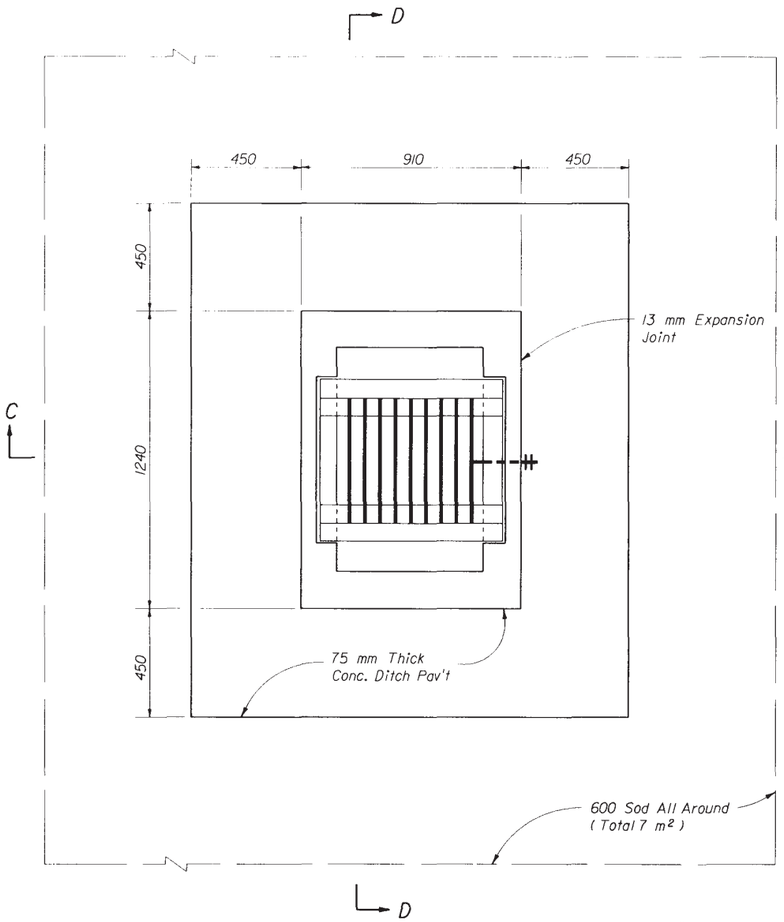

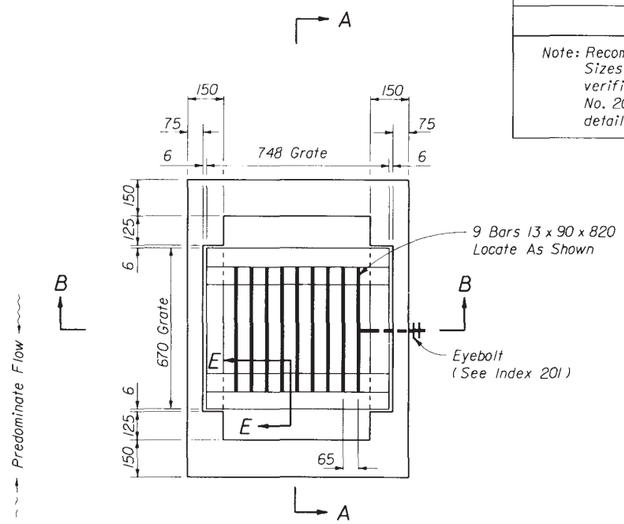

PLAN

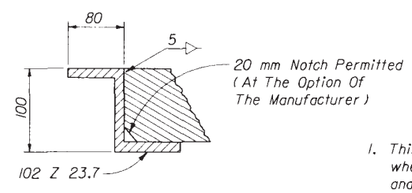

SECTION EE

GENERAL NOTES

1. This inlet is designed for ditches, medians, or other areas subject to heavy wheel loads on limited access facilities where debris may be a problem and flow through this grate is less than 0.200 m³/s. NOTICE: This inlet is not for use in areas subject to pedestrian and/or bicycle traffic.
2. Reinforcing - 50 mm clearance to inside face. Cut or bend bars out of way of pipe to clear pipe by 40 mm.
3. Chamfer exposed edges (20 mm Chamfer).
4. When alternate "G" grate is specified in plans, the grate is to be hot dipped galvanized after fabrication.
5. Cost of ditch paving to be included in the cost of Inlet. Sodding to be paid for under contract unit price for Sodding, M2.
6. For supplemental details see Index No. 201.

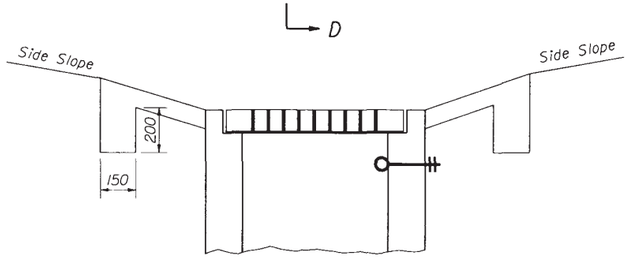

SECTION CC

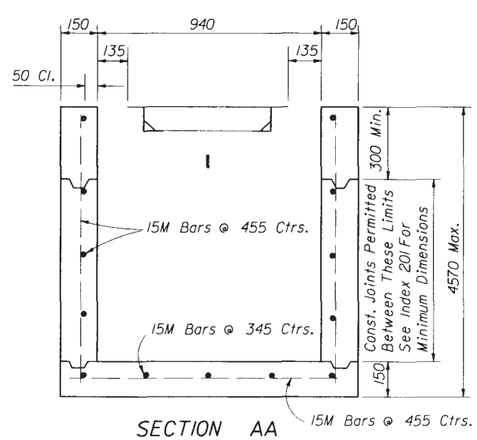

SECTION AA

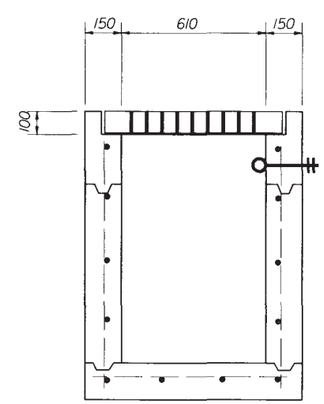

SECTION BB

STATE OF FLORIDA DEPARTMENT OF TRANSPORTATION
ROAD DESIGN

DITCH BOTTOM INLET TYPE A

	Names	Dates
Designed By		
Drawn By		
Checked By		
F.H.W.A. Approved:		7/18/75

Approved By S. A. McGenore
State Drainage Engineer

Revision No.	Sheet No.	Index No.
94	1 of 1	230

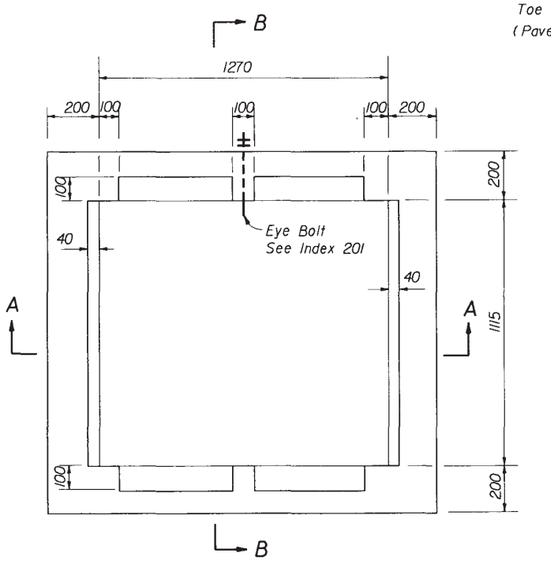

PLAN
(Grate Not Shown)

Predominate Flow (s)

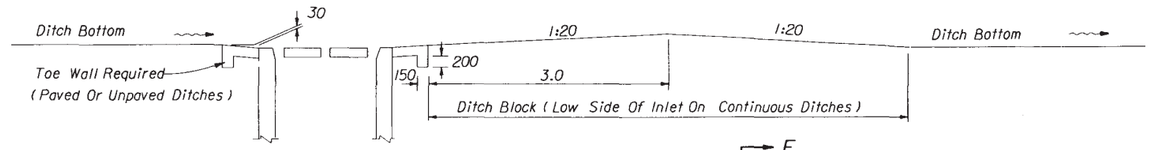

SECTION EE

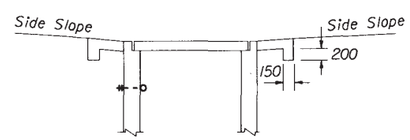

SECTION FF

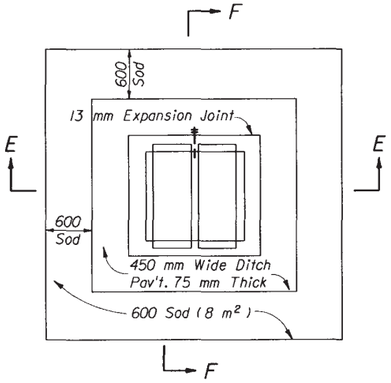

SODDING, PAVEMENT AND DITCH BLOCK

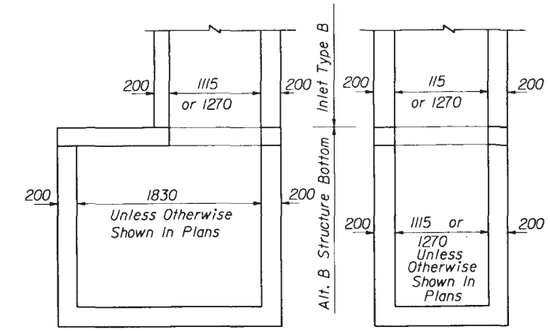

NOTE: Alt. B Structure Bottom Only. See Index No. 200

INLET WITH STRUCTURE BOTTOM

RECOMMENDED MAXIMUM PIPE SIZES	
INLET INSIDE WIDTH	PIPE SIZE
1115	750
1270	900

Note: Recommended sizes are for concrete pipe. Sizes for other types of pipe must be verified for fit in accordance with Index No. 201. For larger pipe see bottom detail above and Index No. 200.

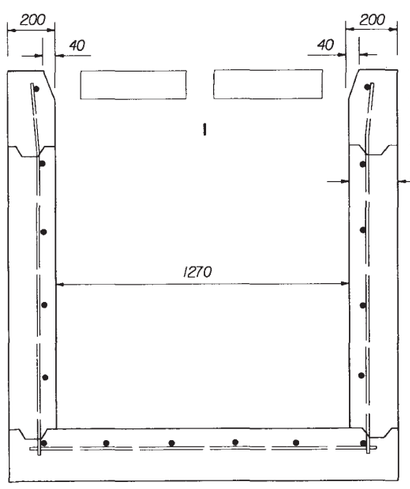

SECTION AA

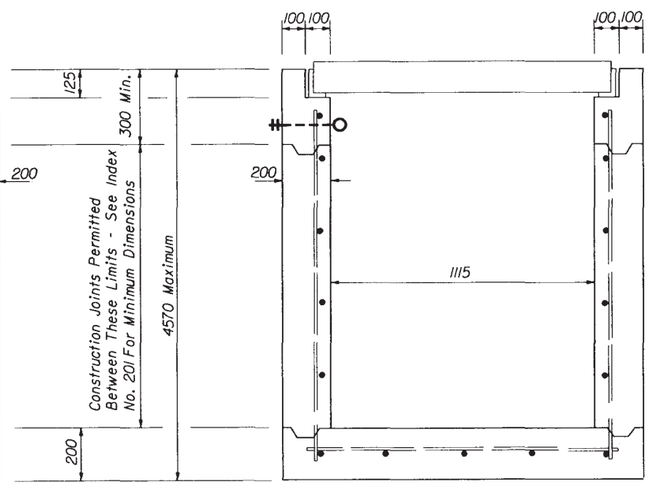

SECTION BB

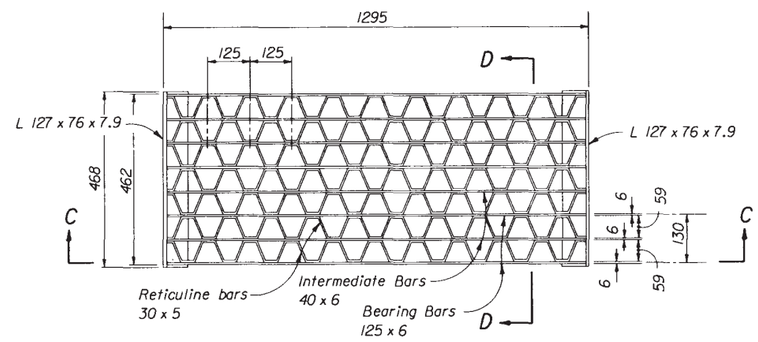

PLAN

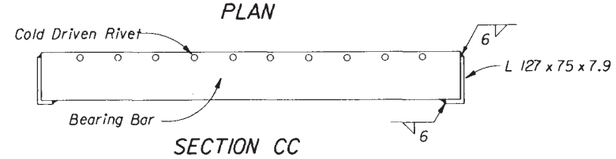

SECTION CC

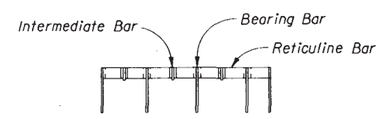

SECTION DD

STEEL GRATE

GENERAL NOTES

1. NOTICE: Inlet intended for use only on that portion of limited access facilities not subject to pedestrian and / or bicycle traffic.
2. Inlet designed for ditches, medians or other areas subject to heavy wheel loads, where debris may be a problem, and inlet intake is 0.2 m^3/s or more.
3. Reinforcing steel all 15M bars at 455 mm centers both ways with 50 mm clearance to inside of walls and bottom. Bars to be cut or bent for 40 mm minimum clearance around pipe.
4. When alternate G grates are specified in the plans, the grates are to be hot-dipped galvanized after fabrication.
5. Ditch paving to be included in cost of inlet. Sodding to be paid for under the contract unit price for Sodding, M2.
6. For supplementary details see Index No. 201.

STATE OF FLORIDA DEPARTMENT OF TRANSPORTATION
ROAD DESIGN

DITCH BOTTOM INLET TYPE B

	Names	Dates
Designed By	HAB	04/67
Drawn By	RWR	05/82
Checked By	JVG	05/82
F.H.W.A. Approved:		07/18/72 09/23/82

Approved By A. A. McLeaure
State Drainage Engineer

Revision No.	Sheet No.	Index No.
94	1 of 1	231

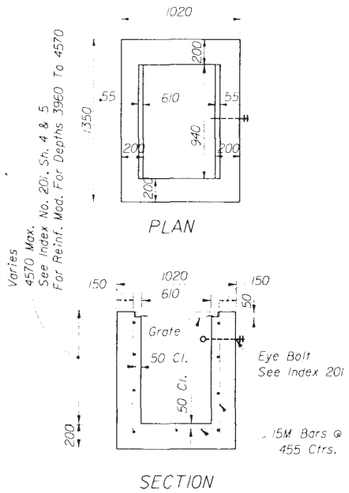

TYPE C

Recommended Maximum Pipe Size:
610 Wall-450 Pipe
940 Wall-600 Pipe

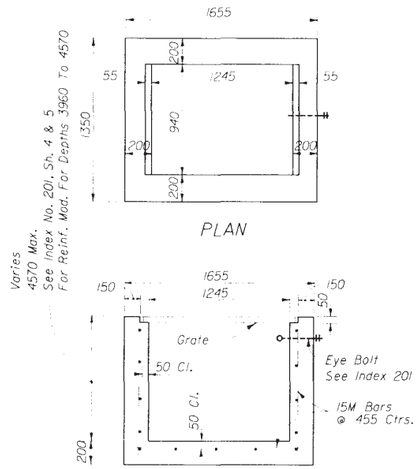

TYPE D

Recommended Maximum Pipe Size:
940 Wall-600 Pipe
1245 Wall-900 Pipe

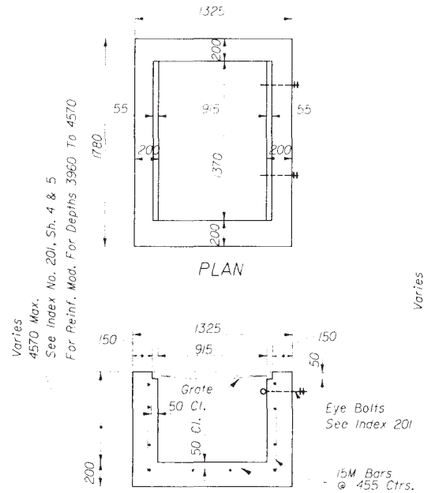

TYPE E

Recommended Maximum Pipe Size:
915 Wall-600 Pipe
1370 Wall-1050 Pipe

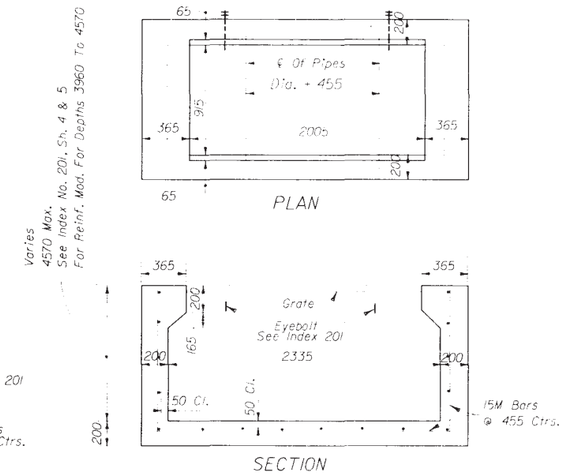

TYPE H

Recommended Maximum Pipe Size:
915 Wall-600 Pipe
2335 Wall-1650 Pipe
2-750 Pipe

INLETS

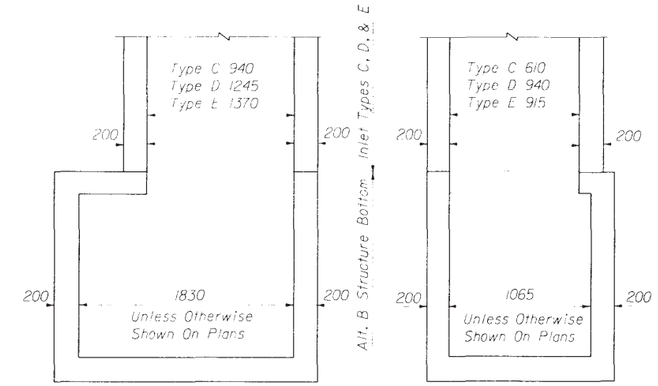

NOTE: Alt. B Structure Bottom Only. See Index No. 200

STRUCTURE BOTTOM FOR INLETS TYPE C, D & E

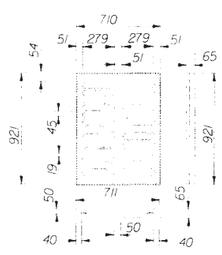

TYPE C
Approx. Weight 107 kg.

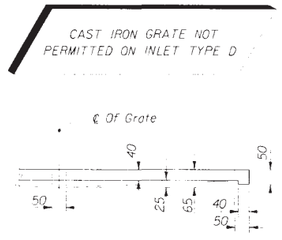

HALF SECTION CAST IRON GRATES

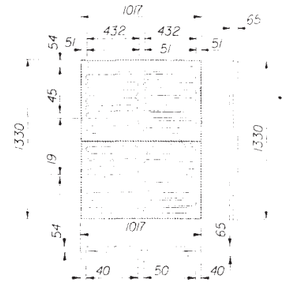

TYPE E
Approx. Weight 211 kg.

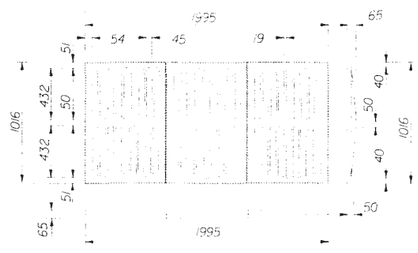

TYPE H
Approx. Weight 329 kg.

CAST IRON GRATES

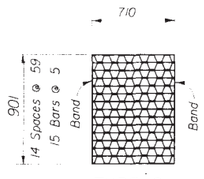

TYPE C
Straight Bars 50 x 5
Reticuline Bars 30 x 5
Bands 40 x 6
Approx. Weight 47 kg.

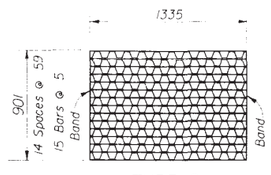

TYPE D
Straight Bars 50 x 5
Reticuline Bars 30 x 5
Bands 40 x 6
Approx. Weight 86 kg.

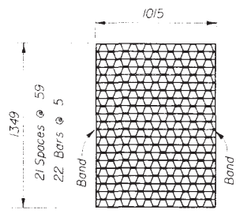

TYPE E
Straight Bars 50 x 5
Reticuline Bars 30 x 5
Bands 40 x 6
Approx. Weight 99 kg.

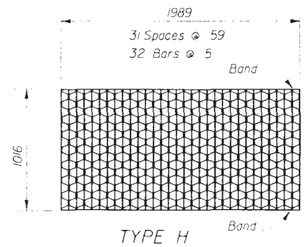

TYPE H
Straight Bars 50 x 5
Reticuline Bars 30 x 5
Bands 40 x 6
Approx. Weight 146 kg.

NOTICE: Steel Grates Are Required On Inlets With Traversable Slots And On Inlets where Bicycle Traffic Is Anticipated.

STEEL GRATES

GENERAL NOTES

1. These inlets are suitable for bicycle and pedestrian areas and are to be used in ditches, medians and other areas subject to infrequent traffic loadings but are not to be placed in areas subject to any heavy wheel loads.

2. Inlets subject to minimal debris should be constructed without slots. Where debris is a problem inlets should be constructed with slots. Slotted inlets located within roadway clear zones and in areas accessible to pedestrians shall have traversable slots. The traversable slot modification is not adaptable to Inlet Type H. Slots may be constructed at either or both ends as shown on plans.

3. Steel grates are to be used on all inlets where bicycle traffic is anticipated. Steel grates are to be used on all inlets with traversable slots. Either cast iron or steel grates may be used on inlets without slots where bicycle traffic is not anticipated. Either cast iron or steel grates may be used on all inlets with non traversable slots. Subject to the selection described above, when Alternate G grate is specified in the plans, either the steel grate, hot dipped galvanized after fabrication, or the cast iron grate may be used, unless the plans stipulate the particular type.

4. Recommended maximum pipe sizes shown are for concrete pipe. Pipe sizes larger than those recommended must be checked for fit.

5. All exposed corners and edges of concrete are to be chamfered 20 mm.

6. Pavement to be used on inlets without slots and inlets with non traversable slots only when called for in the plans; but required on all traversable slot inlets. Cost to be included in contract unit price for inlets. Quantities shown are for information only.

7. Traversable slots constructed in existing inlets shall be paid for as inlets partial, and shall include the cost for slot openings, paving and any required replacement grates.

8. Sodding to be used on all inlets not located in paved areas and paid for under contract unit price for Sodding, M2.

9. For supplementary details see Index No. 201.

STATE OF FLORIDA DEPARTMENT OF TRANSPORTATION
ROAD DESIGN

DITCH BOTTOM INLETS TYPES C, D, E & H

	Names	Dates	Approved By		
Designed By			S.A. McLemore, State Drainage Engineer		
Drawn By					
Checked By	EGR/JG	07/81	Revision No.	Sheet No.	Index No.
F.H.W.A. Approved:		10/07/80	94	1 of 4	232

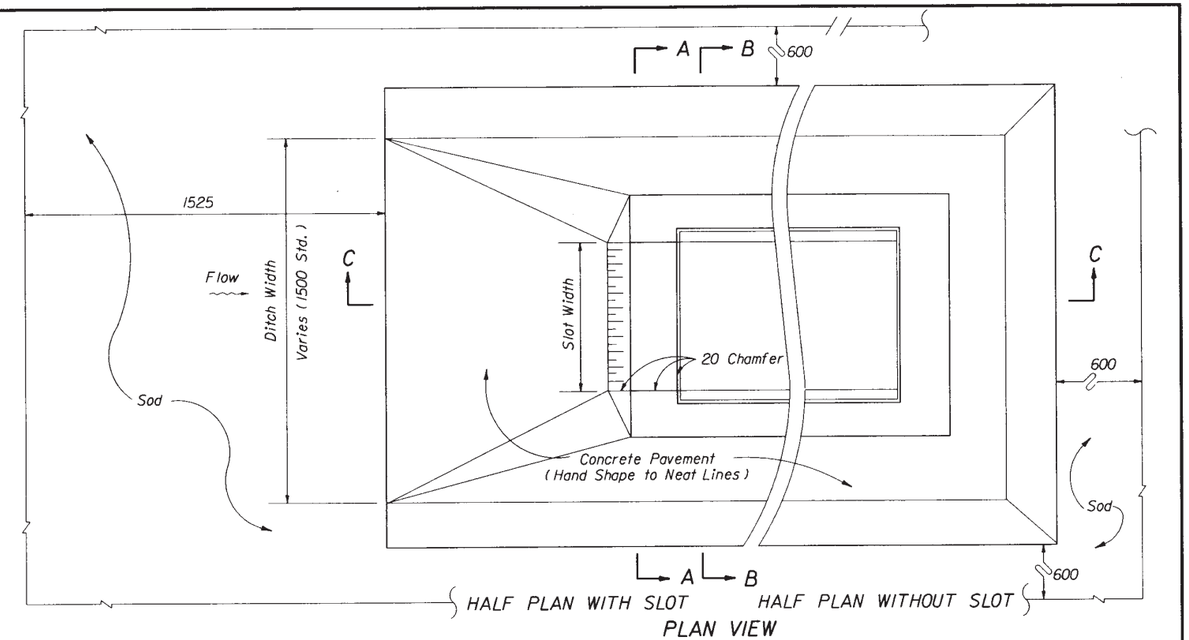

PLAN VIEW

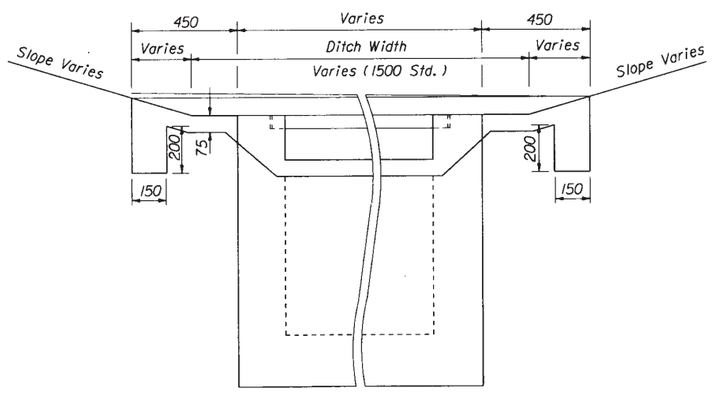

SECTION AA

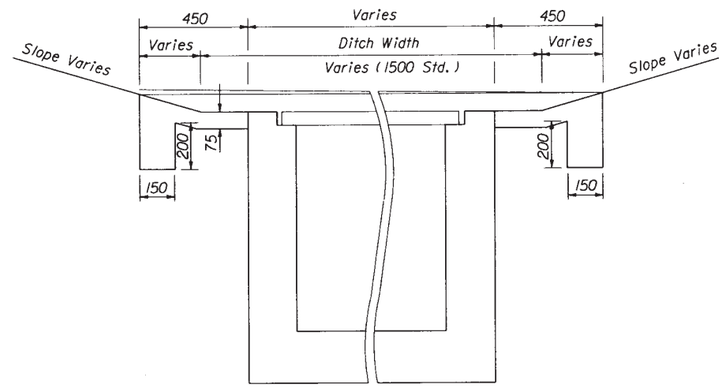

SECTION BB

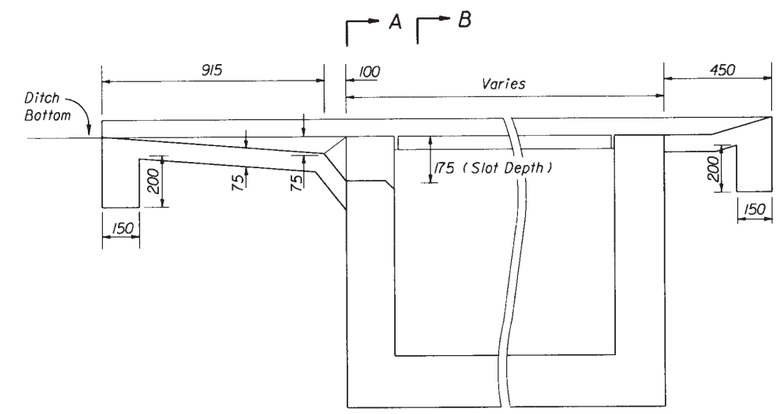

SECTION CC

PAVEMENT AND SODDING QUANTITIES FOR TRAVERSABLE SLOTS						
Inlet	Pavement				Sod	
	Single Slot		Double Slot		Single Slot	Double Slot
	m^2	m^3	m^2	m^3	m^2	m^2
C	4.07	0.59	5.15	0.71	10	14
D	5.01	0.70	6.44	0.84	12	16
E	4.92	0.70	6.16	0.83	12	15

TRAVERSABLE SLOTS

STATE OF FLORIDA DEPARTMENT OF TRANSPORTATION
ROAD DESIGN

DITCH BOTTOM INLETS TYPES C, D, E, & H

	Names	Dates
Designed By	EGR	02/80
Drawn By	JM	02/80
Checked By	JVG	02/80
F.H.W.A. Approved:		10/07/80

Approved By S. A. McLemore
State Drainage Engineer

Revision No.	Sheet No.	Index No.
94	2 of 4	232

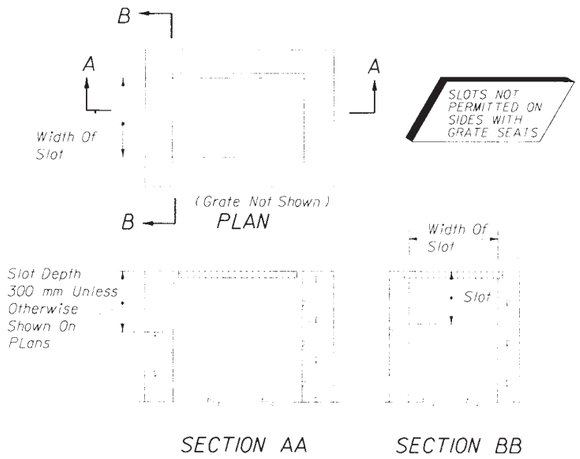

NOTE: See Index No. 229 For Application Guidelines

NON-TRAVERSABLE SLOTS

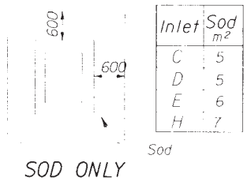

Inlet	Sod m2
C	5
D	5
E	6
H	7

SOD ONLY

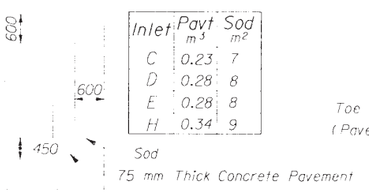

Inlet	Pavt m3	Sod m2
C	0.23	7
D	0.28	8
E	0.28	8
H	0.34	9

PAVT. AND SOD

NOTE: See General Notes Nos. 6 and 7

SODDING AND PAVEMENT FOR INLETS WITHOUT SLOTS AND INLETS WITH NON-TRAVERSABLE SLOTS

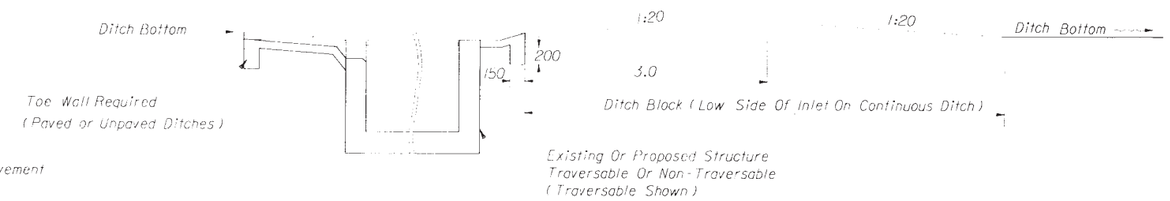

DITCH BLOCK FOR INLETS WITH OR WITHOUT SLOTS

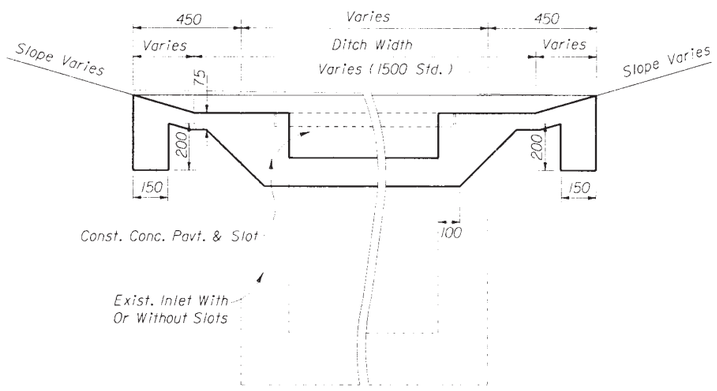

SECTION AA

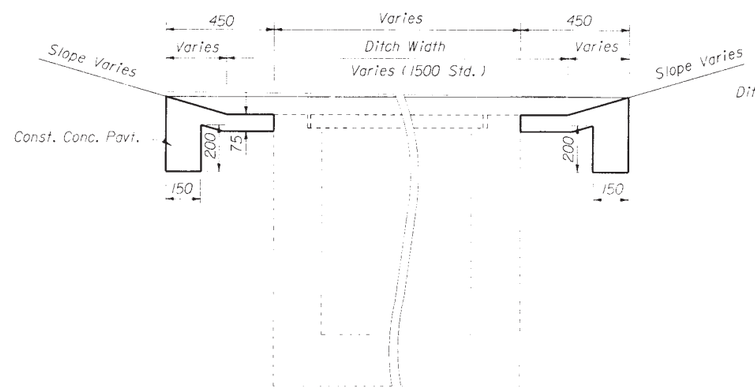

SECTION BB

PAVEMENT AND SODDING QUANTITIES FOR TRAVERSABLE SLOTS						
Inlet	Pavement				Sod	
	Single Slot		Double Slot		Single Slot	Double Slot
	m2	m3	m2	m3	m2	m2
C	4.07	0.59	5	0.71	10	14
D	5.01	0.70	6	0.84	12	16
E	4.92	0.70	6	0.83	12	15

NOTE: For plan view and additional details see sheet 2 of 4.
For payment see General Notes Nos. 6 and 7.

TRAVERSABLE SLOTS FOR EXISTING INLETS

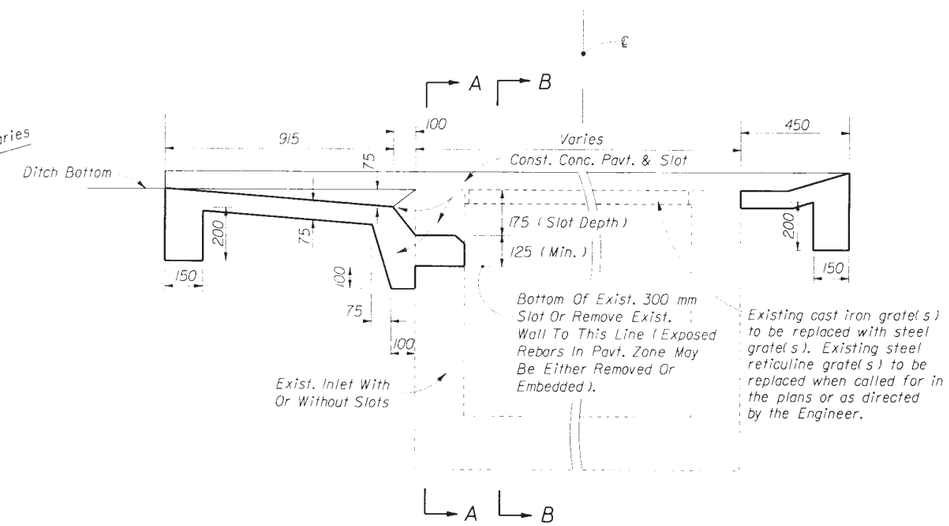

SINGLE SLOT SHOWN (DOUBLE SLOTS SYMMETRICAL ABOUT CENTERLINE)

SECTION CC (CASE I)

STATE OF FLORIDA DEPARTMENT OF TRANSPORTATION
ROAD DESIGN

DITCH BOTTOM INLETS TYPES C,D,E & H

	Names	Dates
Designed By	EGR	07/84
Drawn By	DAE	07/84
Checked By	JBW/JVG	07/84
F.H.W.A. Approved:		09/21/84

Approved By S.D. McLaughlin
State Drainage Engineer

Revision No.	Sheet No.	Index No.
94	3 of 4	232

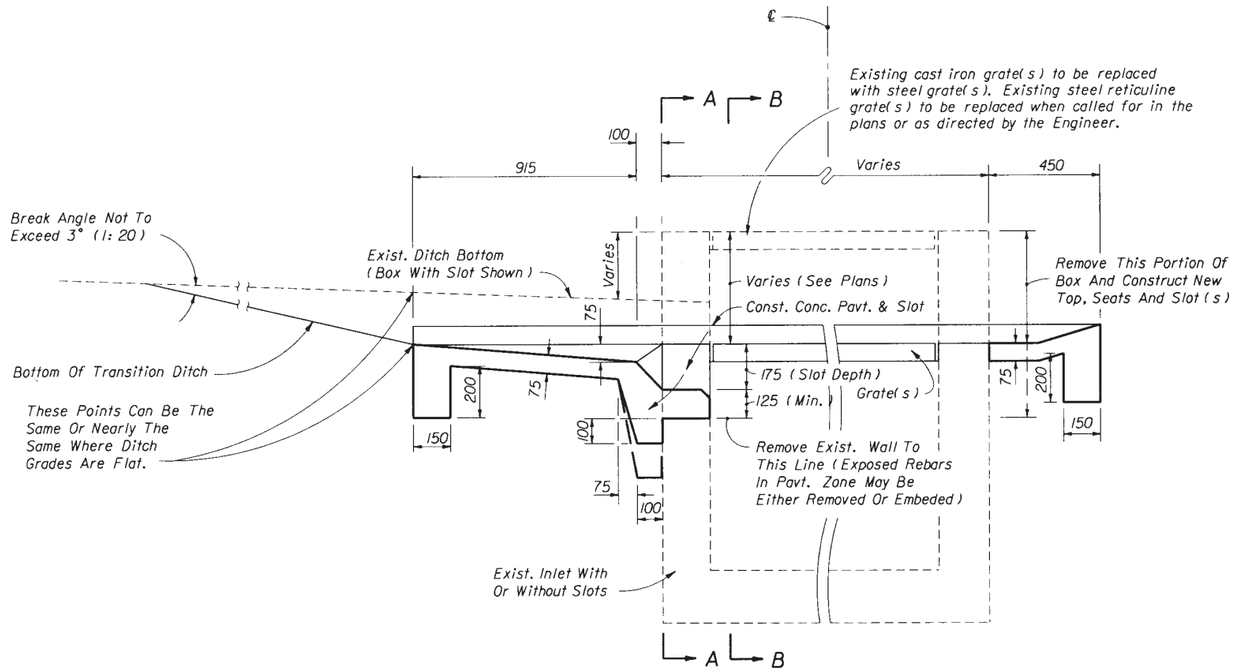

SINGLE SLOT SHOWN (DOUBLE SLOTS SYMMETRICAL ABOUT CENTERLINE)
SECTION CC (CASE 2)

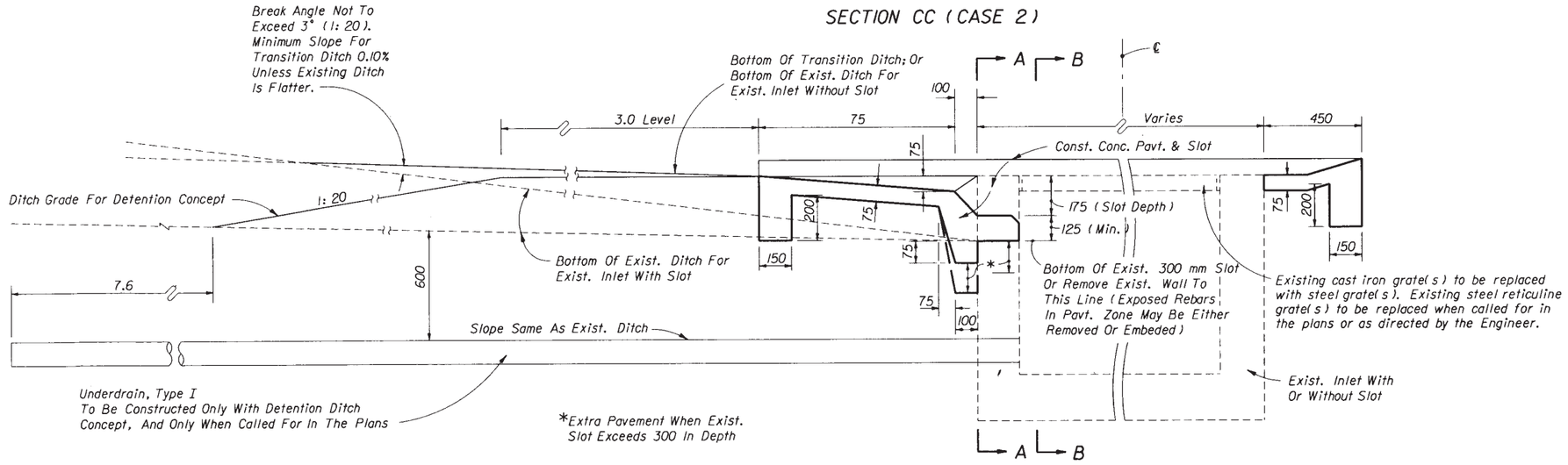

SINGLE SLOT SHOWN (DOUBLE SLOTS SYMMETRICAL ABOUT CENTERLINE)
SECTION CC (CASE 3)

TRAVERSABLE SLOT INLETS (PARTIAL) FOR EXISTING INLETS

DESIGN NOTES FOR TRAVERSABLE SLOT INLETS (PARTIAL) FOR EXISTING INLETS

1. The general purpose of these conversions is to remove the hazard of the protruding inlet top, while not creating a hazard by depressing the top too deeply.

2. The corrective procedure depends on the approach ditch grade and hydraulic requirements of the site. The selection of the appropriate case depends on the relationship between inlet top and ditch elevation, and, on the vertical clearance between the top of the uppermost pipe (s) and the grate. The purpose for the Case I conversion is to add the traversable slot to an existing inlet where top removal, change in grate elevation and ditch transitions are not required. Case 2 will normally be applicable to ditches with flatter grades adjoining the inlet. Case 3 will normally be applicable to ditches with steeper grades adjoining the inlet where buildup of the existing ditch is acceptable.

3. The designer shall stipulate in the plans which case is to be constructed at each individual inlet location.

   Where the existing inlet top is above the existing ditch (Case 2) but borrow material will be required to adjust the ditch (Case 3), and vertical clearance or other conditions do not prevent removal of the inlet top, the designer should call for Case 2. The designer shall determine if ditch reconstruction is required more than 10.7 meters beyond any traversable slot side and shall include separate pay items in the plans to cover the cost for that portion of required ditch reconstruction exceeding the 10.7 meter limit. The designer shall also determine whether ditch pavement is required for ditch restoration within the 10.7 meter limit and include that pavement under a pay item separate from the inlets partial.

   When the detention ditch concept is to be used with Case 3, the designer shall stipulate 'Case 3 (Detention)' in the plans.

   The designer shall determine whether tight soil or other conditions at each individual inlet indicates the need for underdrain in Case 3 conversions and shall call for Underdrain, Type I in the plans.

METHOD OF PAYMENT FOR TRAVERSABLE SLOT INLETS (PARTIAL) FOR EXISTING INLETS

1. Existing inlets converted to traversable slot tops under Cases 1, 2 and 3 shall be paid for as inlets partial, EA. Case shall not be included in the pay item description.

2. All ditch reconstruction work within 10.7 meters of each traversable slot conversion, whether required by these details or as a direct result of the conversion, shall be included as a part of the partial cost. Reconstruction work shall include excavation and removal of surplus materials or borrow materials in place, grading, compaction, shaping and seeding and mulching. Sodding, ditch pavement and underdrain are not included as part of the inlet partial cost and are to be paid for separately.

3. Inlet pavement and sodding shall be in accordance with the sections on this detail and with the Plan on Sheet 2 of 4 and Sections AA, BB and CC (as Case 1) and tabular quantities on Sheet 3 of 4.

4. Unit price and payment shall constitute full compensation for inlet conversion, replacement grate(s) ditch reconstruction, seeding and mulching, and shall be paid for under the contract unit price for Inlets (DT Bot Type ___) (Partial), EA.

   Sodding shall be paid for under the contract unit price for Sodding, M2.

   Ditch pavement shall be paid for separate from the inlet by pavement type(s) and unit(s) as called for in the plans.

   Underdrain called for in the plans for Case 3 conversions shall be paid for as Underdrain, (Type I), MI.

STATE OF FLORIDA DEPARTMENT OF TRANSPORTATION
ROAD DESIGN

DITCH BOTTOM INLETS TYPES C, D, E & H

	Names	Dates	Approved By
Designed By	JVG/EGR	03/10/86	State Drainage Engineer
Drawn By	HSD/dds	05/20/86	
Checked By	JVG/EGR	05/22/86	
F.H.W.A. Approved:		11/07/86	

Revision No.	Sheet No.	Index No.
94	4 of 4	232

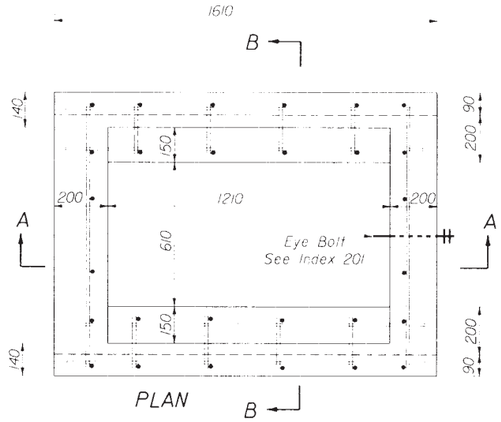

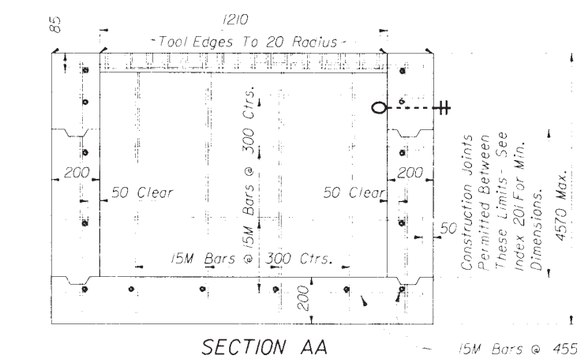

SECTION AA

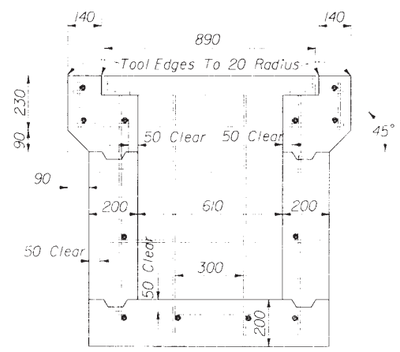

SECTION BB

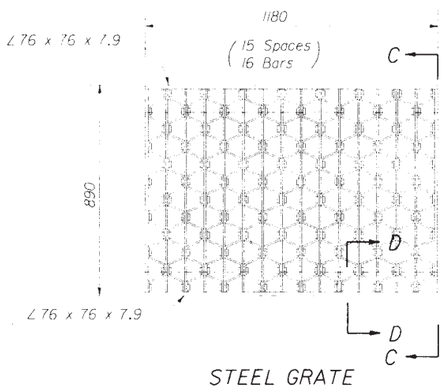

STEEL GRATE

Steel Grating, Straight Bars 75 x 6
Reticuline Bars 50 x 5

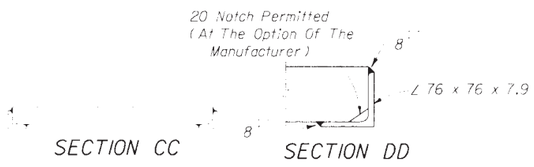

SECTION CC

SECTION DD

TYPE F

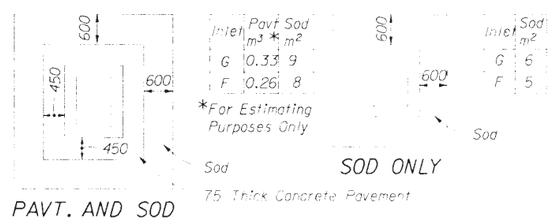

Inlet	Pavt m^3 *	Sod m^2
G	0.33	9
F	0.26	8

*For Estimating Purposes Only

Inlet	Sod m^2
G	6
F	5

PAVT. AND SOD

SOD ONLY

75 Thick Concrete Pavement

Notes: 1. Pavement and/or sod to be used only where called for in the plans.
2. Cost of paving to be included in cost of inlet.

PAVEMENT AND SODDING

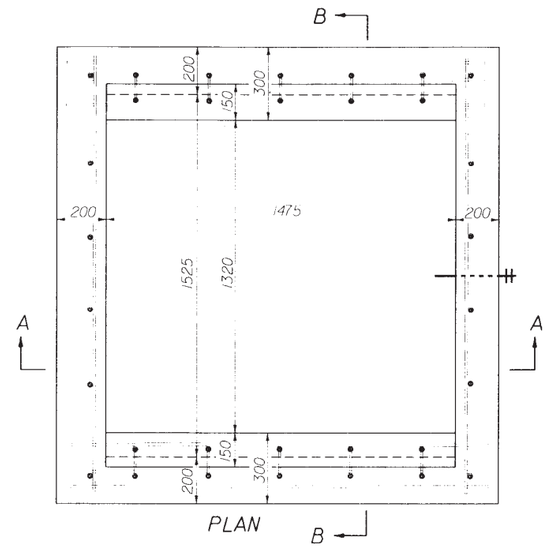

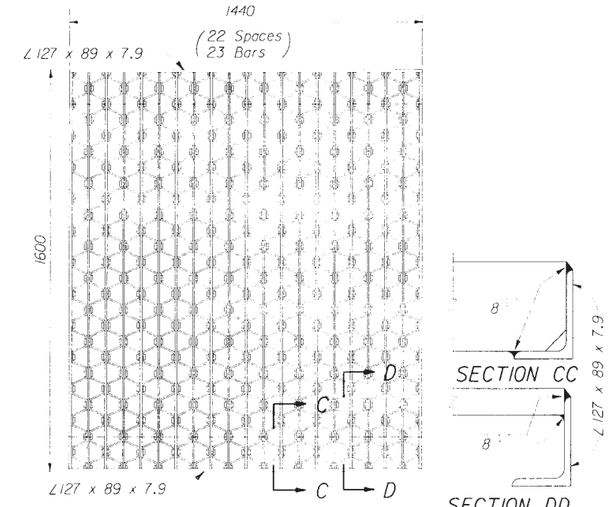

STEEL GRATE

125 mm Steel Decking, Weight 285 kg Main Bars 125 x 6
Intermediate Bars 40 x 6, Reticuline Bars 30 x 5

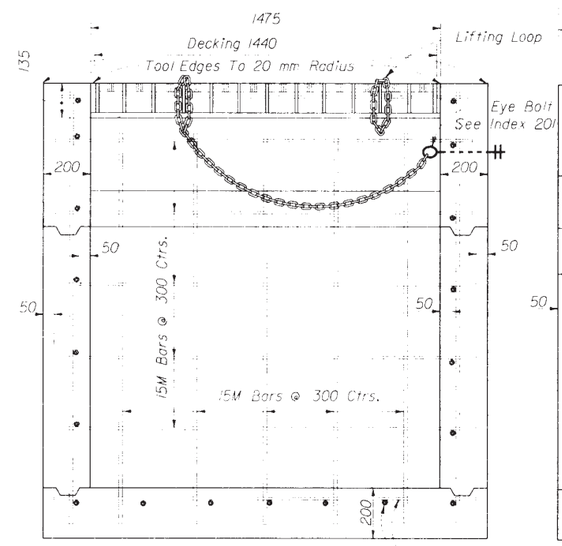

SECTION AA

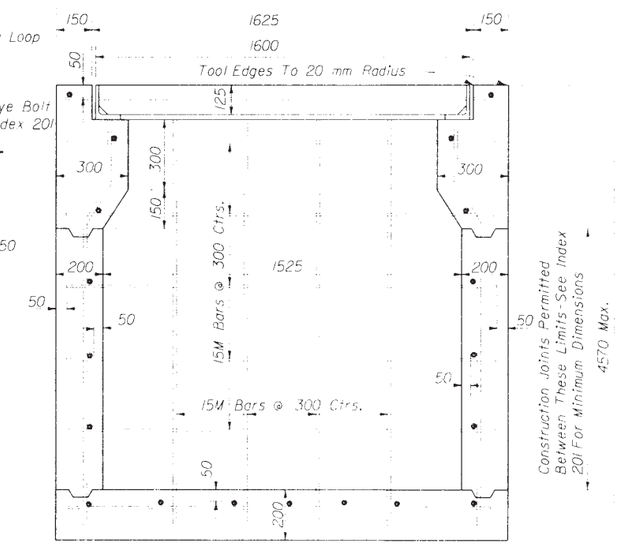

SECTION BB

TYPE G

GENERAL NOTES

1. These inlets are designed for use in ditches, medians, pavement areas, or other areas subject to heavy wheel loads where debris is minimal and is subject to pedestrian and/or bicycle traffic.

2. When alternate G grate is specified in plans, the grate is to be hot dipped galvanized after fabrication.

3. These inlets may be used with Art. B structure bottoms, Index 200. The inlet and bottom combinations are to be paid for under the contract unit price for inlets (DT Bot. Type F (or G)) (J Bot. Depth), EA.

STATE OF FLORIDA DEPARTMENT OF TRANSPORTATION
ROAD DESIGN

DITCH BOTTOM INLETS TYPES F & G

	Names	Dates
Designed By	T.W.	01/50
Drawn By	MEF	01/50
Checked By	WHM	01/50
F.H.W.A. Approved:		05/01/75

Approved By: J. A. McKenzie
State Drainage Engineer

Revision No.	Sheet No.	Index No.
94	1 of 1	233

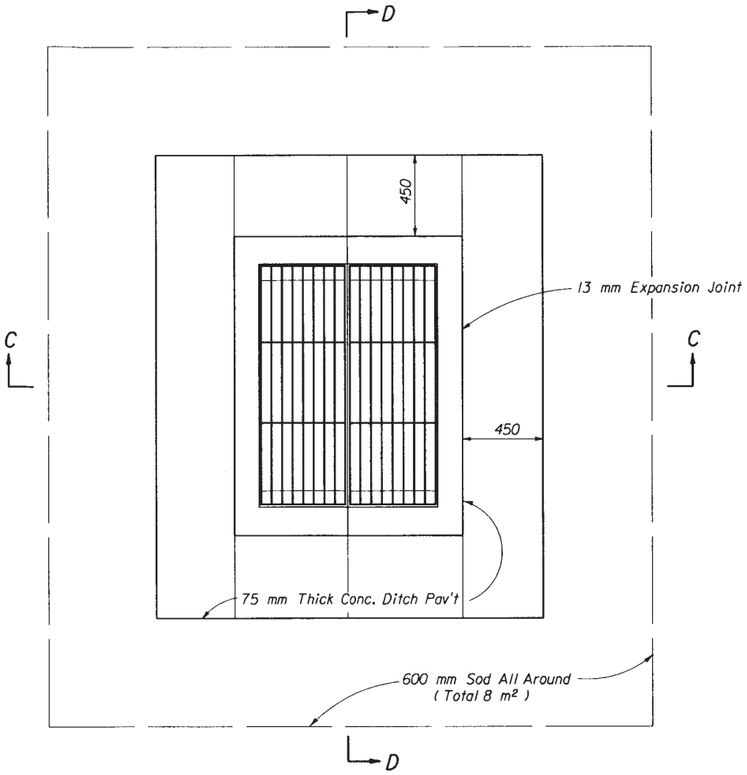

PAVEMENT & SODDING

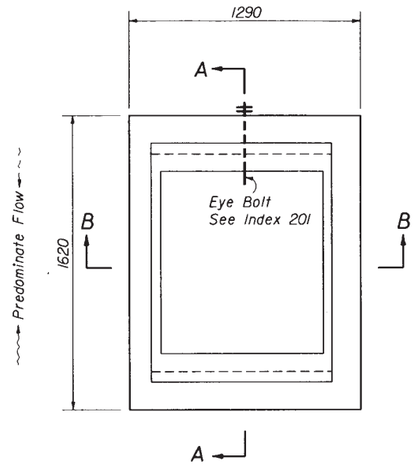

PLAN

RECOMMENDED MAXIMUM PIPE SIZES	
Inlet Inside Width (mm)	Pipe Size (mm)
890	600
1220	900

Note: Recommended sizes are for concrete pipe. Sizes for other types of pipe must be verified for fit in accordance with Index No. 201. For larger pipe see bottom detail right and Index No. 200.

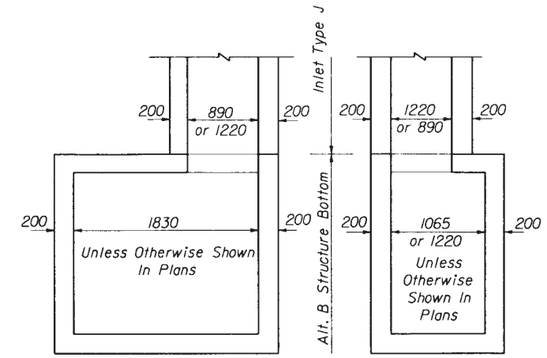

NOTE: Alt. B Structure Bottom Only. See Index 200

INLET WITH STRUCTURE BOTTOM

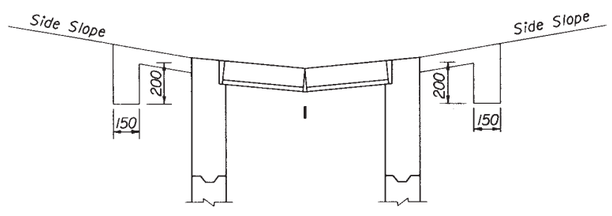

SECTION CC

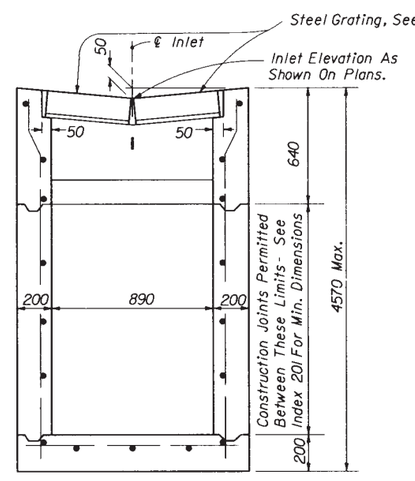

SECTION BB

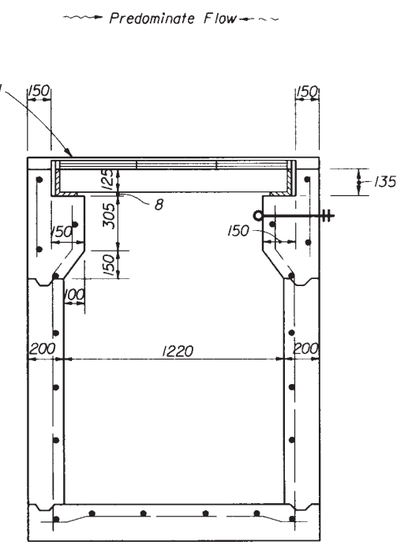

SECTION AA

GENERAL NOTES

1. This inlet is designed for ditches, medians or other areas subject to heavy wheel loads, where only light debris is expected and pedestrian traffic is anticipated.
   NOTICE: Inlet not for use in areas subject to bicycle traffic.
2. Reinforcing - 15M bars at 455 mm centers both ways with 50 mm clearance to inside face. Cut or bend bars out of way of pipe when necessary; bars to clear pipe by 40 mm.
3. When alternate G grate is specified in plans the grate is to be hot dipped galvanized after fabrication.
4. For supplemental details, see Index 201.
5. Cost of ditch paving to be included in cost of inlet. Sodding to be paid for under contract unit price for Sodding, M2.

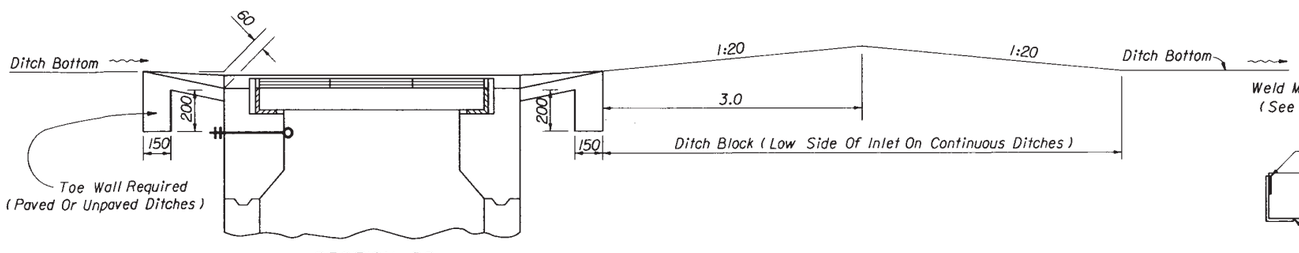

SECTION DD

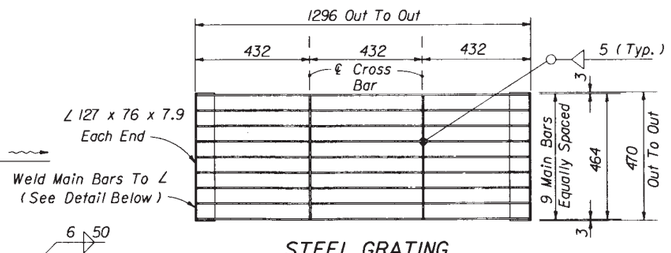

STEEL GRATING

Note: Two Required Per Inlet

Main Bars 125 x 6 (Notched For Cross Bars).

Cross Bars 45 x 6 (Continuously Welded At Main Bar Notches).

Main Bars And Cross Bars Flush On Top.

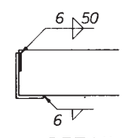

DETAIL

STATE OF FLORIDA DEPARTMENT OF TRANSPORTATION
ROAD DESIGN

DITCH BOTTOM INLET TYPE J

	Names	Dates
Designed By	LMF	08/76
Drawn By		
Checked By	SRL	08/76
F.H.W.A. Approved:		09/03/76

Approved By S. A. McLemore
State Drainage Engineer

Revision No.	Sheet No.	Index No.
94	1 of 1	234

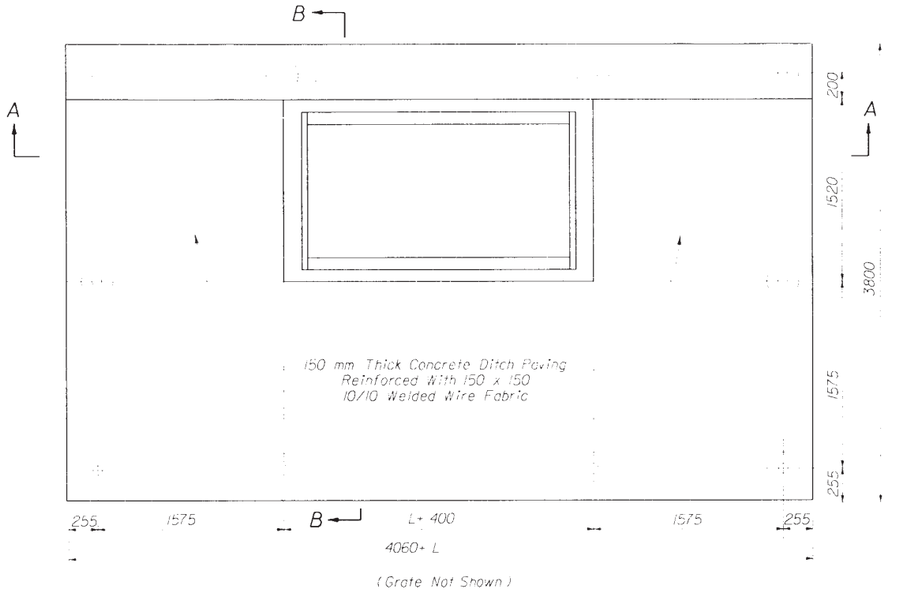

PLAN

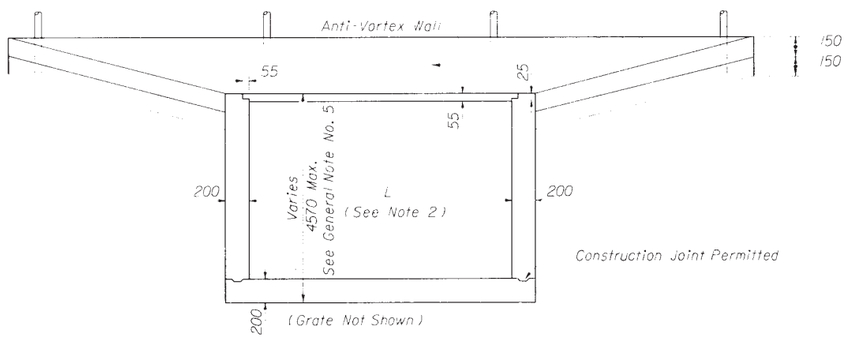

SECTION AA

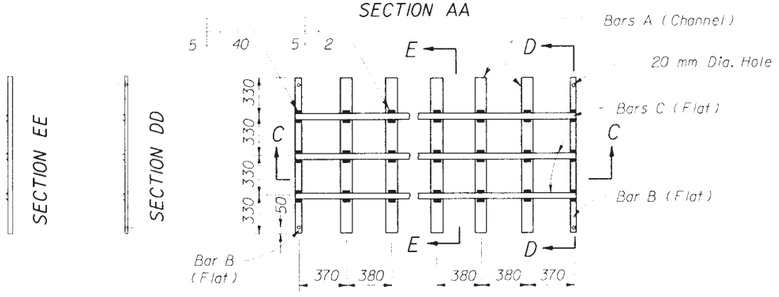

STEEL GRATE

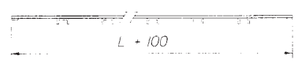

SECTION CC

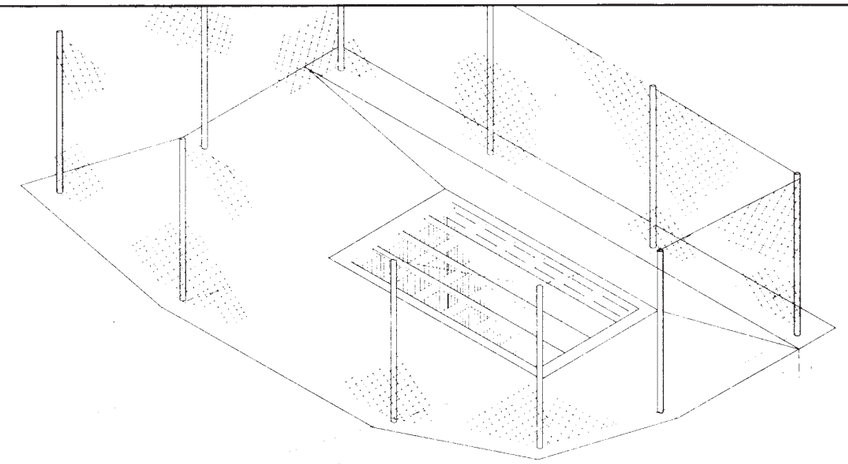

ISOMETRIC
OF
INLET FENCE ENCLOSURE

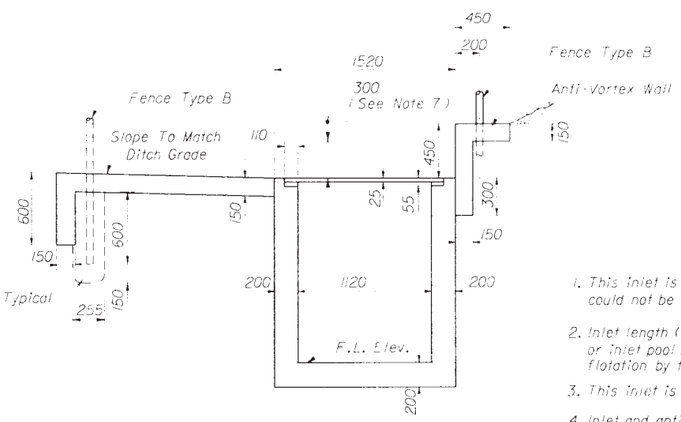

(Grate Not Shown)

SECTION BB

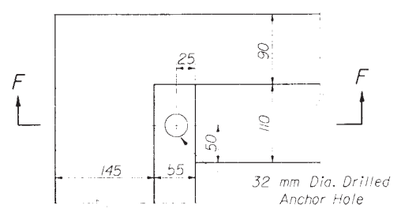

GRATE SEAT AND ANCHOR HOLE PLAN

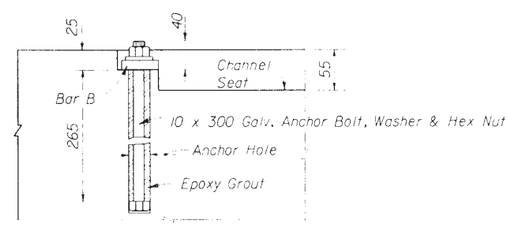

(With Bar B And Anchor Bolt)

SECTION FF

GRATE QUANTITIES						
PIPE SIZE	L	BILL OF STEEL			STEEL WEIGHT	
		BAR	No. REQ'D.	LENGTH	CHANNEL 100 x 8 (kg)	FLAT 50 x 14 (5.5kg)
750 & 900	1450	A	3	1320	32	
		B	2	1320		15
		C	3	1550		26
1050 & 1200	1830	A	4	1320	43	
		B	2	1320		15
		C	3	1930		32
1350 & 1500	2210	A	5	1320	53	
		B	2	1320		15
		C	3	2310		38
1650 & 1800	2590	A	6	1320	64	
		B	2	1320		15
		C	3	2690		45
SPECIAL	2970	A	7	1320	74	
		B	2	1320		15
		C	3	3070		51
SPECIAL	3350	A	8	1320	85	
		B	2	1320		15
		C	3	3450		57
SPECIAL	3730	A	9	1320	96	
		B	2	1320		15
		C	3	3830		63
SPECIAL	4110	A	10	1320	106	
		B	2	1320		15
		C	3	4210		70
SPECIAL	4490	A	11	1320	117	
		B	2	1320		15
		C	3	4590		76
SPECIAL	4870	A	12	1320	127	
		B	2	1320		15
		C	3	4970		82
SPECIAL	5250	A	13	1320	138	
		B	2	1320		15
		C	3	5350		89
SPECIAL	5630	A	14	1320	148	
		B	2	1320		15
		C	3	5730		95

GENERAL NOTES

1. This inlet is to be used at locations having high flow rates, usually where an endwall could not be utilized without hazardous intake.
2. Inlet length (L) shall be set by the designer for the greater of either culvert requirement or inlet pool not to exceed 300 mm depth. Structures over 1830 mm in depth are to be checked for flotation by the designer of project drainage.
3. This inlet is not intended for use with Alternate B structure bottoms.
4. Inlet and anti-vortex wall to be Class I Concrete.
5. Reinforcing - 15M bars at 455 mm centers both ways for pipe sizes up to 1800 mm diameter; 40 mm clearance to inside face and bottom of inlet. See Index No. 201, Sh. 4 & 5 for reinf. steel modification for depths 3960 mm to 4570 mm. Bend top and corner bars to clear anchor holes. Inlets for special size pipe require special reinforcement design and design approval by the project design engineer.
6. Channel section C 75 x 150 may be used as an alternate for the C 100 x 135 channel.
7. Channels and bars shall be ASTM A 242, A 441, A 572 or A 588, 425 MPa steel, and galvanized in accordance with Section 962-7 of the Standard Specifications.
8. Fence enclosure shall be Fence Type B (Index No. 452). All posts to be set in concrete. A minimum of 10 posts required. Corner and approach side posts to be 75 mm nominal diameter.
9. Cost of ditch paving, anti-vortex wall, grate, concrete, reinforcing steel and fence enclosure to be included in the cost of inlet. Inlet to be paid for under the contract unit price for Inlets (DT Bot Type K), EA.

STATE OF FLORIDA DEPARTMENT OF TRANSPORTATION
ROAD DESIGN

DITCH BOTTOM INLET TYPE K

	Names	Dates
Designed By	FHWA	
Drawn By	SM	6/79
Checked By	JG	6/79
F.H.W.A. Approved:		

Approved By S.A. McLemore
State Drainage Engineer

Revision No.	Sheet No.	Index No.
94	1 of 1	235

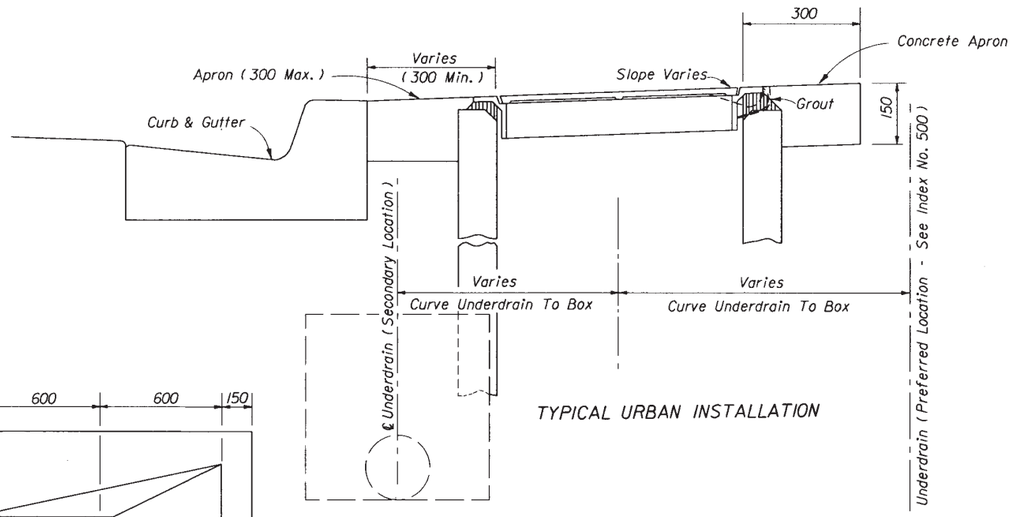

TYPICAL URBAN INSTALLATION

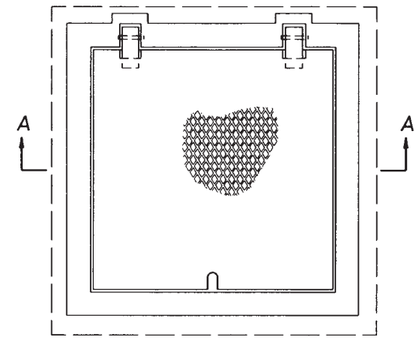

TOP VIEW

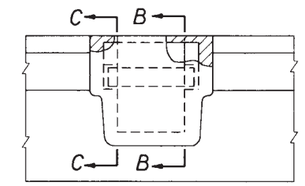

BACK VIEW

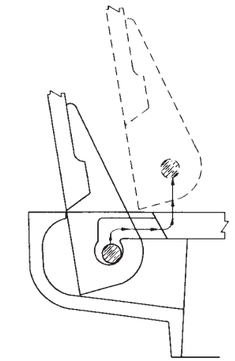

COVER REMOVAL

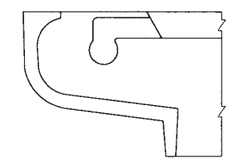

SECTION CC

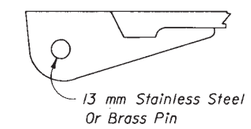

SECTION BB

HINGE DETAIL

GENERAL NOTES

1. Cast iron cover and frame to be Neenah Foundry Company R-6660-JH, U.S. Foundry Manufacturing Corporation No. A-632 or equal. Neenah R-6660-JH detailed this index.
2. Box to be Class I Concrete, reinforced with 15M bars on 555 mm centers both ways, sides and bottom.
3. Concrete apron to be included in the contract unit price for Underdrain Inspection Box, EA.
4. All covers shall be furnished with pick holes. Fitted lifts or handles are not permitted.
5. Manhole Type P Alternate A, Index 200, with Type I Frame and Cover, Index 201, may be used in lieu of the box detailed on this sheet, and is recommended when high ADT increases chance of the repeated vehicle loadings.

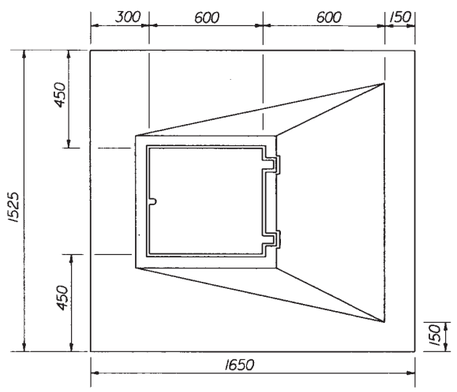

TOP VIEW

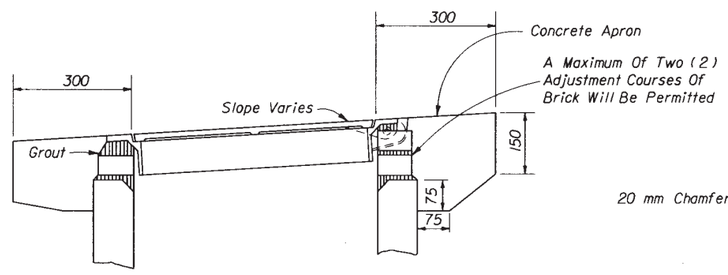

PERMISSIBLE TOP ADJUSTMENT

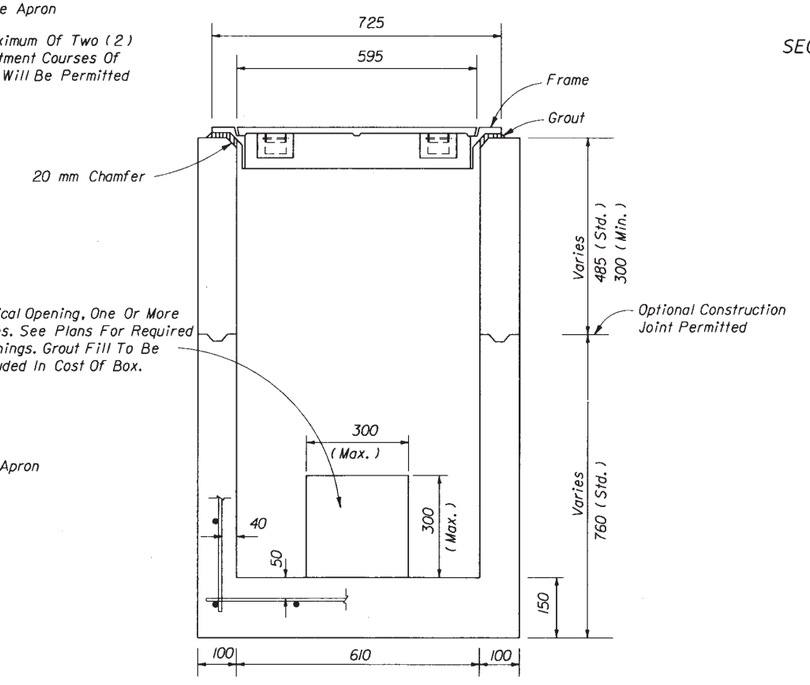

SECTION AA

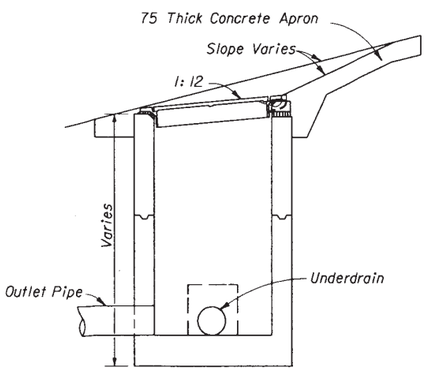

SECTION

TYPICAL INSTALLATION ON SLOPES

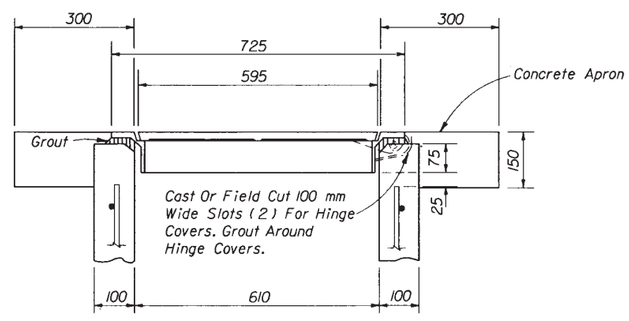

TYPICAL TOP AND APRON

BOX AND TOP

STATE OF FLORIDA DEPARTMENT OF TRANSPORTATION
ROAD DESIGN

UNDERDRAIN INSPECTION BOX

	Names	Dates
Designed By	WS	05/81
Drawn By	JM	05/81
Checked By	JVG	05/81
F.H.W.A. Approved:		10/08/81

Approved By A. A. Molenaar
State Drainage Engineer

Revision No.	Sheet No.	Index No.
94	1 of 1	245

APPLICATION GUIDELINES FOR PIPE END TREATMENTS

INDEX NO.	DESCRIPTION		APPLICATION			INLET END			OUTLET END		SAFETY		ECONOMIC RATING	
	TYPE	PIPE SIZE (mm)	CROSSDRAIN	SIDEDRAIN	MEDIAN	APPLICABLE	HYDRAULIC PERFORMANCE	K_e	APPLICABLE	EROSION TOLERANT	PERMITTED LOCATION	TRAFFIC-SAFE GRATE AVAILABLE		
250	Straight Concrete	Single and Multiple 375 Thru 1350	Yes	No	Limited	Yes	Excellent	0.2	Limited	Good	Outside CZ	No	Fair	For back of sidewalk location see Index No. 282
251	Straight Concrete	Single and Double 1500	Yes	No	Limited	Yes	Excellent	0.2	Limited	Good	Outside CZ	No	Fair	
252	Straight Concrete	Single and Double 1650	Yes	No	Limited	Yes	Excellent	0.2	Limited	Good	Outside CZ	No	Fair	
253	Straight Concrete	Single and Double 1800	Yes	No	Limited	Yes	Excellent	0.2	Limited	Good	Outside CZ	No	Fair	
255	Straight Concrete	Single 2100	Yes	No	Limited	Yes	Excellent	0.2	Limited	Good	Outside CZ	No	Fair	
258	Straight Sand Cement	Single & Multiple 450 Thru 2100	Limited*	No	Limited	Yes	Very Good	0.3	Yes	Good	Outside CZ	No	Good	*For temporary construction or use on a minor facility
260	U Type With Grate Concrete	Single 375 Thru 750	Limited	No	Yes	Yes	Fair	0.7	Yes	Very Good	Inside CZ	Required	Good	
261	U Type Concrete	Single 375 Thru 750	Limited	No	Yes	Limited	Good	0.5-0.7	Yes	Good	Grate Required Inside CZ	Yes	Fair	
264	Concrete Energy Dissipator	Single 750 Thru 1800	Limited	No	No	No	NA	NA	Yes	Excellent	Outside CZ	No	NA	
266	Winged Concrete	Single 300 Thru 1200	Yes	No	Yes	Yes	Very Good	0.3	Yes	Good	Outside CZ	No	Good	
268	U Type Sand Cement	Single & Multiple* 375 Thru 1500	Limited	No	Limited	Yes	Good	0.5	Yes	Very Good	Outside CZ	No	Good	*For temporary construction or use on a minor facility.
270	Flared End Section Concrete	Single 300 Thru 1800	Yes	No	Yes	Yes	Good	0.5	Yes	Very Good*	Outside* CZ	No	Very Good	*Construction of optional toewall and concrete jacket may be necessary. Flared end sections sizes 300 and 375 may be located as close as 2.4 beyond the outside edge of the shoulder.
272	Cross Drain Mitered End Section	Single & Multiple 375 Thru 1800	Yes	No	Yes	Yes	Fair	0.7	Yes	Good	Outside* CZ	No	Very Good	*Mitered end sections sizes 375, 450 and 600 may be located as close as 2.4 beyond the outside edge of the shoulder.
273	Side Drain Mitered End Section	Single & Multiple 375 Thru 1500	No	Yes	No	Yes	Fair	0.7 (w/o grate) 1.0 (with grate)	Yes	Good	Inside* CZ	Yes	Good	*Mitered end section size 750 and larger require use of grate. Grate may be deleted if pipe is located outside CZ and is offset from approach ditch alignment.

1. All end treatments must be selected to satisfy hydraulic suitabilities with proper consideration given to safety and economics.
2. CZ denotes clear zone, formerly CRA denoting clear recovery area.
3. Grates should not be placed on outlet ends unless positive debris protection is provided at inlet end.
4. Additional notes concerning application restrictions may be shown on individual indexes.
5. Economic ratings are based on statewide average costs.
6. End treatments with a K_e of 0.5 or greater should be used only in areas of low design velocities and negligible debris.
7. Pipe sizes are circular, Class III B Wall, concrete pipe. Elliptical pipe and corrugated pipe are to be checked for fit in accordance with Index No. 201; metal pipe sizes should be reviewed using 67 mm x 13 mm corrugation up to 750 mm and 75 mm x 25 mm corrugation for larger sizes.

STATE OF FLORIDA DEPARTMENT OF TRANSPORTATION
ROAD DESIGN

PIPE END TREATMENT APPLICATION GUIDE

	Names	Dates
Designed By	EGR	09/06/84
Drawn By	DAE	09/06/84
Checked By	EGR	09/06/84
F.H.W.A. Approved:		09/21/84

Approved By H. A. McLemore
State Drainage Engineer

Revision No.	Sheet No.	Index No.
94	1 of 1	249

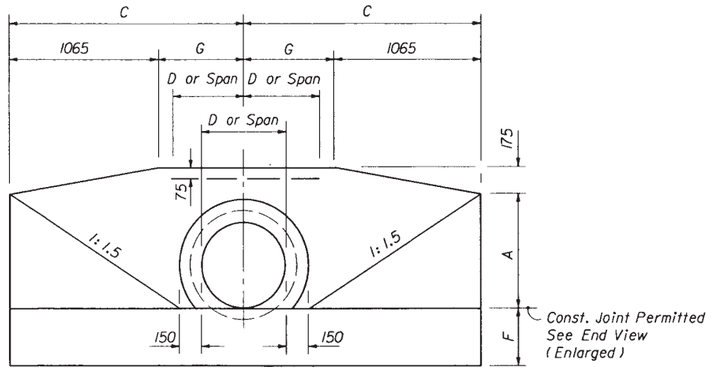

FRONT VIEW

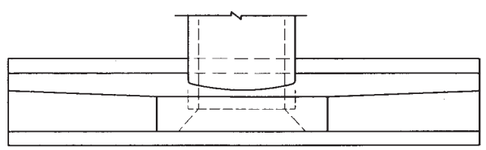

TOP VIEW

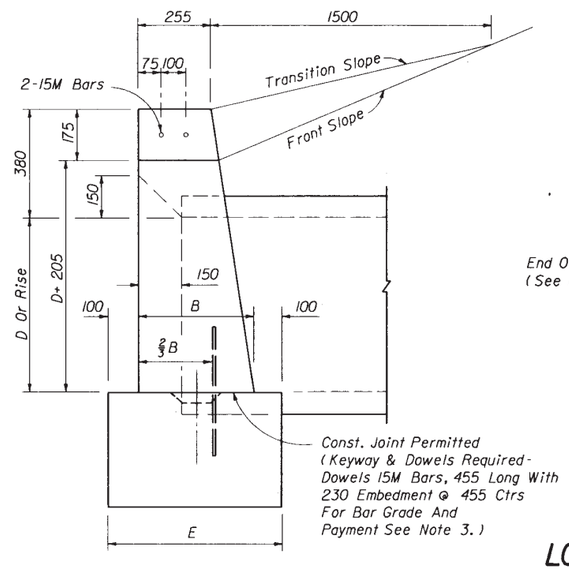

END VIEW (ENLARGED)

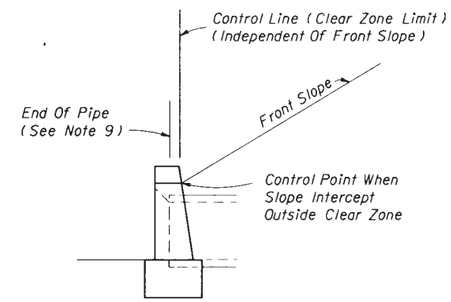

END VIEW

STANDARD LOCATION CONTROL

ENDWALL DIMENSIONS (EXCLUSIVE OF MULTIPLE PIPE SPACING)

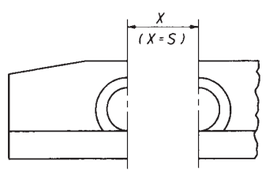

FRONT VIEW

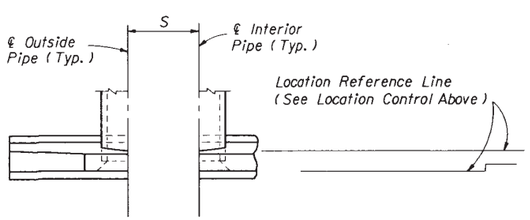

TOP VIEW

NORMAL PIPE

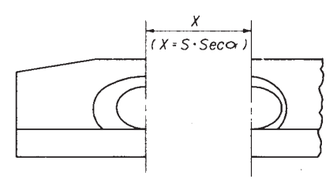

FRONT VIEW

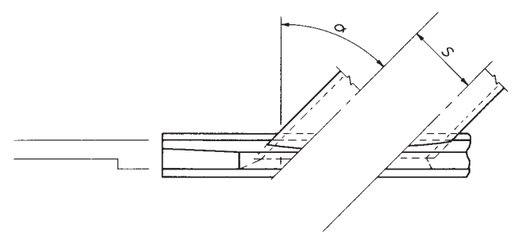

TOP VIEW

SKEWED PIPE

LEGEND

α Pipe Skew
S Center To Center Pipe Spacing
X Centerline To Centerline Dimension At Face Of Headwall

ENDWALL POSITIONS FOR SINGLE AND MULTIPLE PIPE AND SPACING FOR MULTIPLE PIPE

GENERAL NOTES

1. Endwall dimensions, locations and positions are for round and elliptical concrete pipe and for round and pipe-arch corrugated metal pipe. Round concrete pipe shown.
2. Front slope and ditch transitions shall be in accordance with Index No. 280.
3. Endwalls may be cast in place or precast concrete. Reinforcing steel shall be 40 MPa or 60 MPa. Additional reinforcement necessary for handling precast units shall be determined by the Contractor or the supplier. Cost of reinforcement shall be included in the contract unit price for Concrete, (Endwalls).
4. All exposed corners and edges of concrete are to be chamfered 20 mm.
5. Concrete meeting the requirements of ASTM C-478 (27 579 kPa) may be used in lieu of Class I concrete in precast items manufactured in plants which are under the Standard Operating Procedures for the inspection of precast drainage products.
6. On outfall ditches with side slopes flatter than 1:1.5, provide 6.0 m transitions from the endwall to the flatter side slopes, right of way permitting.
7. For sodding around endwalls see Index No. 281.
8. Payment for concrete quantities for endwalls skewed to the pipe shall be made on the following basis:

Endwall Skew To Pipe	Use Tabulated Value
0° to 5°	0°
6° to 15°	15°
16° to 30°	30°
31° or over	45°

9. Pipe length plan quantities shall be based on the pipe end locations shown in the standard location control end view, or lengths based on special endwall locations called for in the plans.
10. Payment for pipe in pipe culverts shall be based on plan quantities, adjusted for endwall locations subsequently established by the Engineer.
11. Endwalls to be paid for under the contract unit price for Concrete Class I (Endwalls), M3.

STATE OF FLORIDA DEPARTMENT OF TRANSPORTATION
ROAD DESIGN

STRAIGHT CONCRETE ENDWALLS SINGLE AND MULTIPLE PIPE

	Names	Dates
Designed By	HAB/EGR	7.3/83
Drawn By	RWR/HSD	83
Checked By	JBW/JVG	83
F.H.W.A. Approved:		10/06/83

Approved By S A McLemore
State Drainage Engineer

Revision No.	Sheet No.	Index No.
94	1 of 2	250

DATA AND ESTIMATED QUANTITIES FOR ONE ENDWALL

ROUND CONCRETE AND CORRUGATED METAL PIPE

D	Opening Area (m^2) Number Of Pipes 1	2	3	4	Dimensions A	B	C	E	F	G	S	X 0°	15°	30°	45°	Class I Concrete (m^3) Number And Type Of Pipe And Skew Angle Of Pipe: Single Concrete 0°	Single Metal 0°	Double Concrete 0°	15°	30°	45°	Double Metal 0°	15°	30°	45°	Triple Concrete 0°	15°	30°	45°	Triple Metal 0°	15°	30°	45°	Quadruple Concrete 0°	15°	30°	45°	Quadruple Metal 0°	15°	30°	45°	D
375	0.11	0.23	0.34	0.46	0.58	0.36	1.22	0.56	0.36	0.15	0.79	0.79	0.81	0.91	1.12	0.94	0.95	1.22	1.22	1.26	1.33	1.24	1.25	1.28	1.36	1.48	1.50	1.57	1.70	1.52	1.54	1.61	1.76	1.76	1.79	1.89	2.09	1.81	1.84	2.10	2.17	375
450	0.16	0.33	0.49	0.66	0.66	0.38	1.37	0.59	0.38	0.31	0.86	0.86	0.89	0.99	1.22	1.19	1.22	1.52	1.54	1.57	1.66	1.56	1.57	1.61	1.70	1.86	1.88	1.96	2.13	1.92	1.94	2.03	2.21	2.19	2.22	2.34	2.60	2.26	2.30	2.42	2.70	450
525	0.22	0.45	0.67	0.90	0.74	0.41	1.52	0.61	0.41	0.46	0.97	0.97	0.99	1.12	1.37	1.51																										525
600	0.29	0.58	0.88	1.17	0.81	0.41	1.68	0.61	0.41	0.61	1.04	1.04	1.07	1.19	1.47	1.71	1.75	2.16	2.17	2.22	2.34	2.23	2.24	2.30	2.42	2.59	2.62	2.73	2.96	2.69	2.72	2.84	3.08	3.04	3.08	3.24	3.59	3.17	3.21	3.39	3.75	600
675	0.37	0.74	1.11	1.42	0.89	0.43	1.83	0.63	0.43	0.76	1.17	1.17	1.22	1.35	1.65	2.09																										675
750	0.46	0.91	1.37	1.82	0.97	0.46	1.98	0.66	0.46	0.91	1.30	1.30	1.35	1.50	1.83	2.49	2.55	3.16	3.18	3.26	2.43	3.27	3.30	3.39	3.55	3.81	3.85	4.01	4.35	3.98	4.03	4.80	4.56	4.47	4.53	4.77	5.28	4.69	4.76	5.02	5.57	750
900	0.66	1.31	1.97	2.63	1.12	0.51	2.29	0.71	0.51	1.22	1.55	1.55	1.60	1.78	2.18	3.46	3.55	4.38	4.41	4.53	4.76	4.59	4.59	4.70	4.96	5.29	5.53	5.57	6.05	5.59	5.61	5.85	6.37	6.22	6.32	6.64	7.36	6.57	6.66	7.02	7.80	900
1050	0.89	1.79	2.68	3.57	1.27	0.56	2.59	0.76	0.61	1.52	1.83	1.83	1.91	2.11	2.59	4.84	4.96	6.20	6.25	6.41	6.77	6.45	6.50	6.67	7.06	7.57	7.66	7.99	8.70	7.94	8.04	8.39	9.17	8.93	9.08	9.56	10.62	9.42	9.57	10.11	11.26	1050
1200	1.17	2.34	3.50	4.67	1.42	0.64	2.90	0.84	0.61	1.83	2.06	2.06	2.13	2.39	2.92	6.23	6.41	7.95	8.01	8.22	8.66	8.30	8.36	8.59	9.08	9.66	9.79	10.20	11.09	10.20	10.33	10.79	11.77	11.38	11.57	12.18	13.52	12.10	12.29	12.97	14.45	1200
1350	1.48	2.95	4.43	5.91	1.58	0.76	3.20	0.97	0.69	2.31	2.34	2.34	2.41	2.69	3.30	8.95	9.00	11.64	11.74	12.06	12.76					14.33	14.54	15.18	16.58					17.04	17.32	18.30	20.39					1350

CORRUGATED METAL PIPE ARCH

Span	Rise	Opening Area (m^2) Number Of Pipes 1	2	3	4	Dimensions A	B	C	E	F	G	S	X 0°	15°	30°	45°	Class I Concrete (m^3) Number Of Pipe And Skew Angle Of Pipe: Single 0°	Double 0°	15°	30°	45°	Triple 0°	15°	30°	45°	Quadruple 0°	15°	30°	45°	Span	Rise	Approx. Equiv. Round Pipe
450	340	0.10	0.20	0.31	0.41	0.53	0.36	1.17	0.56	0.36	0.10	0.76	0.76	0.79	0.89	1.07	0.89	1.12	1.13	1.16	1.22	1.36	1.38	1.44	1.56	1.60	1.62	1.70	1.90	450	340	375
510	380	0.15	0.30	0.45	0.59	0.58	0.36	1.30	0.56	0.36	0.23	0.86	0.86	0.89	0.99	1.22	1.02	1.29	1.30	1.34	1.41	1.56	1.57	1.64	1.78	1.83	1.87	1.96	2.17	510	380	450
680	500	0.26	0.52	0.78	1.04	0.71	0.38	1.58	0.58	0.38	0.51	1.04	1.04	1.07	1.19	1.47	1.36	1.77	1.78	1.83	1.93	2.16	2.19	2.29	2.49	2.57	2.67	2.75	3.07	680	500	600
910	660	0.40	0.80	1.20	1.60	0.81	0.41	1.81	0.61	0.41	0.75	1.22	1.22	1.27	1.40	1.73	1.79	2.32	2.33	2.40	2.54	2.84	2.80	3.00	3.28	3.36	3.42	3.61	4.01	910	660	750
1030	740	0.55	1.10	1.64	2.19	0.94	0.43	2.10	0.64	0.43	1.03	1.45	1.45	1.50	1.68	2.06	2.39	3.10	3.13	3.21	3.40	3.82	3.87	4.04	4.40	4.53	4.61	4.86	5.42	1030	740	900
1150	820	0.78	1.56	2.34	3.12	1.04	0.45	2.34	0.67	0.46	1.27	1.68	1.68	1.73	1.93	2.36	2.93	3.82	3.85	3.96	4.19	4.71	4.77	4.96	5.44	5.60	5.69	6.01	6.70	1150	820	1050
1390	970	0.98	1.97	2.95	3.90	1.17	0.48	2.63	0.69	0.48	1.53	1.93	1.93	2.01	2.23	2.72	3.72	4.82	4.86	4.99	5.28	5.92	5.99	6.25	6.83	7.02	7.13	7.58	8.38	1390	970	1200
1630	1120	1.23	2.45	3.68	4.91	1.29	0.51	2.81	0.71	0.51	1.84	2.16	2.16	2.23	2.49	3.05	4.50	5.84	5.89	6.05	6.40	7.19	7.28	7.60	8.30	8.52	8.66	9.15	10.19	1630	1120	1350
1880	1260	1.57	3.14	4.71	6.28	1.40	0.56	3.15	0.76	0.61	2.09	2.39	2.39	2.46	2.77	3.38	5.96	7.76	7.82	8.04	8.50	9.55	9.67	10.11	11.08	11.35	11.54	12.19	13.59	1880	1260	1500

Note: Use the guidelines of General Note No. 8 for selecting tabular quantities.

CONCRETE ELLIPTICAL PIPE

Rise	Span	Opening Area (m^2) Number Of Pipes 1	2	3	4	Dimensions A	B	C	E	F	G	S	X 0°	15°	30°	45°	Class I Concrete (m^3) Number Of Pipe And Skew Angle Of Pipe: Single 0°	Double 0°	15°	30°	45°	Triple 0°	15°	30°	45°	Quadruple 0°	15°	30°	45°	Rise	Span	Approx. Equiv. Round Pipe
305	460	0.12	0.24	0.36	0.48	0.51	0.36	1.14	0.47	0.36	0.08	0.86	0.86	0.89	0.99	1.22	0.83	1.11	1.12	1.15	1.22	1.38	1.39	1.46	1.60	1.65	1.68	1.78	1.99	305	460	375
365	575	0.17	0.34	0.51	0.68	0.56	0.38	1.29	0.58	0.38	0.21	1.04	1.04	1.07	1.19	1.47	1.04	1.39	1.41	1.45	1.54	1.75	1.77	1.86	2.05	2.10	2.14	2.27	2.55	365	575	450
490	770	0.31	0.61	0.92	1.22	0.69	0.41	1.57	0.61	0.41	0.49	1.27	1.27	1.32	1.47	1.80	1.45	1.95	1.96	2.03	2.16	2.46	2.50	2.62	2.88	2.97	3.02	3.20	3.59	490	770	600
610	960	0.47	0.95	1.42	1.90	0.81	0.43	1.90	0.63	0.43	0.84	1.57	1.57	1.63	1.83	2.23	2.02	2.71	2.74	2.82	3.00	3.43	3.47	3.65	4.01	4.12	4.20	4.45	4.99	610	960	750
730	1150	0.68	1.37	2.05	2.74	0.94	0.46	2.13	0.66	0.45	1.07	1.83	1.83	1.90	2.11	2.59	2.54	3.43	3.46	3.56	3.79	4.31	4.37	4.59	5.05	5.20	5.29	5.61	6.30	730	1150	900
855	1345	0.95	1.90	2.84	3.79	1.07	0.48	2.43	0.69	0.48	1.36	2.16	2.16	2.23	2.49	3.05	3.24	4.40	4.44	4.59	4.89	5.57	5.66	5.93	6.54	6.74	6.86	7.28	8.18	855	1345	1050
975	1535	1.20	2.40	3.60	4.80	1.17	0.51	2.67	0.71	0.51	1.60	2.41	2.41	2.49	2.79	3.40	3.99	5.47	5.53	5.70	6.09	6.96	7.06	7.42	8.19	8.45	8.60	9.14	10.29	975	1535	1200
1095	1730	1.55	3.10	4.65	6.20	1.30	0.56	2.96	0.76	0.56	1.89	2.69	2.69	2.79	3.10	3.81	5.07	6.89	6.95	7.17	7.65	8.71	8.84	9.27	10.21	10.53	10.72	11.38	12.79	1095	1730	1350
1220	1920	1.90	3.80	5.70	7.60	1.42	0.64	3.25	0.84	0.61	2.18	2.97	2.97	3.07	3.43	4.19	6.62	8.98	9.06	9.34	9.95	11.33	11.52	12.06	13.28	13.69	13.94	14.79	16.62	1220	1920	1500
1340	2110	2.30	4.60	6.90	9.20	1.55	0.76	3.53	0.96	0.76	2.46	3.23	3.23	3.33	3.73	4.57	9.56	12.98	12.98	13.51	14.40	16.41	16.65	17.48	19.25	19.86	20.21	21.45	24.12	1340	2110	1650
1465	2305	2.73	5.48	8.19	10.92	1.68	0.86	3.82	1.07	0.86	2.76	3.45	3.45	3.58	3.99	4.88	12.58	17.02	17.17	17.71	18.85	21.45	21.76	22.82	25.12	25.88	26.35	27.94	31.38	1465	2305	1800

STATE OF FLORIDA DEPARTMENT OF TRANSPORTATION
ROAD DESIGN

STRAIGHT CONCRETE ENDWALLS SINGLE AND MULTIPLE PIPE

	Names	Dates
Designed By	HAB/EGR	73/83
Drawn By	RWR/HSD	83
Checked By	JBW/JVG	83
F.H.W.A. Approved:		10/06/83

Approved By S. A. McKenna
State Drainage Engineer

Revision No.	Sheet No.	Index No.
94	2 of 2	250

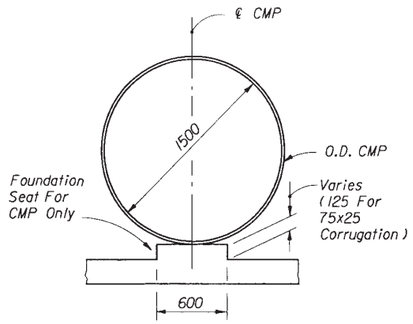

SECTION BB

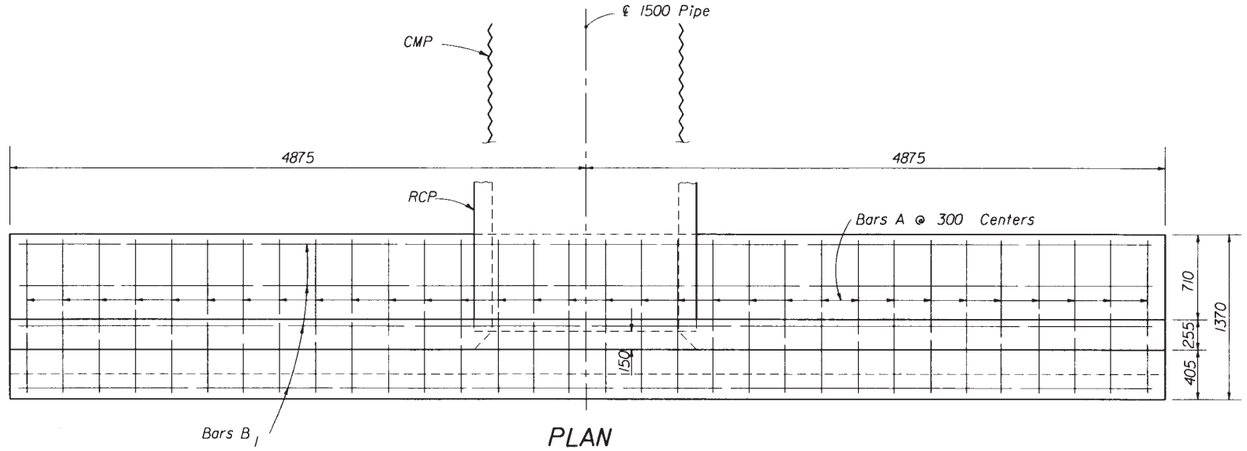

PLAN
(Showing Bar In Footing)

BILL OF REINFORCING STEEL

MARK	SIZE	NO. REQ'D	LENGTH	LOCATION	BENDING
A	15M	32	1270	Footing	Straight
B_1	15M	13	9650	Footing And Wall	Straight
B_2	15M	4	3760	Wall	Straight
B_3	15M	4	4190	Wall	Straight
C	15M	26	2845	Wall	Bend
D	15M	18	2285	Wall	Straight
E	15M	8	510	Footing And Wall	Straight

BENDING DIAGRAM

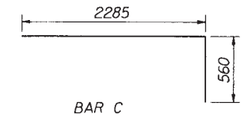

NOTE: All bar dimensions are out to out

ESTIMATED QUANTITIES

ITEM	UNIT	RCP	CMP
Concrete Class II	m^3	8.6	8.7
Reinforcing Steel	kg	495	495

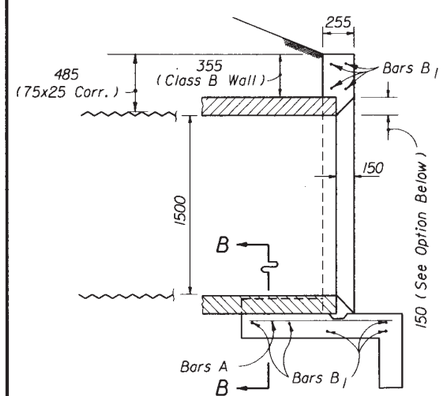

SECTION AA

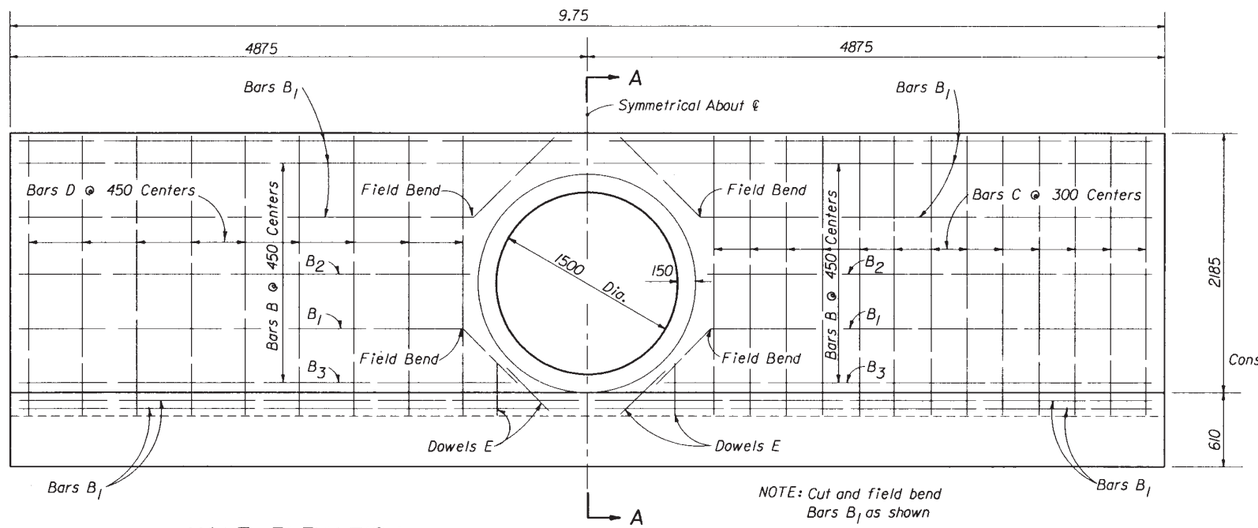

HALF ELEVATION
(Showing Bars In Front Face Of Wall)

NOTE: Cut and field bend Bars B_1 as shown

HALF ELEVATION
(Showing Bars In Back Face Of Wall)

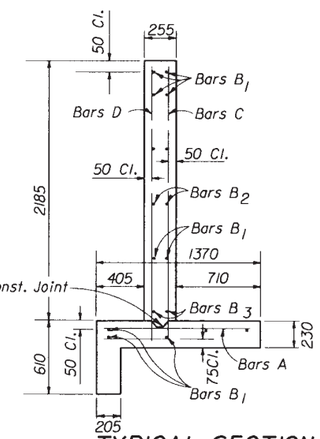

TYPICAL SECTION THRU ENDWALL

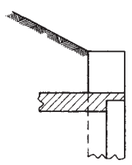

OPTIONAL ENTRANCE FOR CONCRETE PIPE

GENERAL NOTES

1. Endwalls may be cast-in-place or precast construction. Cast-in-place endwalls shall conform to the details on this index, design specifications AASHTO 1989. Precast construction which adheres to this Index, including any additional reinforcement required for handling which shall be determined by the Contractor or supplier, does not require additional approvals. Deviations from this Index, for precast units, shall require the approval of the State Drainage Engineer prior to construction. For precast construction, see Index No. 201 for opening and grouting details.
2. Reinforcing steel shall be either 400 MPa or 450 MPa.
3. Concrete shall be Class II except concrete meeting the requirements of ASTM C 478 (27 579 kPa) may be used in lieu of Class II concrete in precast units manufactured in plants which are under the Standard Operating Procedures for the inspection of precast drainage products.
4. Chamfer: All exposed edges and corners to be chamfered 20 mm unless otherwise shown.
5. Metal pipe shall be bituminous coated on all surfaces in contact with concrete and 300 mm beyond the boundary of contact. Any suitable bituminous material may be field applied.
6. Sodding shall be in accordance with Index No. 281 and paid for under the contract unit price for Sodding, M2.
7. Basis of payment for either cast-in-place or precast construction shall be the estimated quantities tabulated on the Index. Concrete and reinforcing steel shall be paid for under the contract unit prices for Conc. Class II (Endwalls), M3 and Reinf. Steel (Roadway), KG.

STATE OF FLORIDA DEPARTMENT OF TRANSPORTATION
ROAD DESIGN

STRAIGHT CONCRETE ENDWALLS
SINGLE AND DOUBLE 1500 PIPE

	Names	Dates
Designed By		
Drawn By	TWJ	11/49
Checked By	WHM	11/49
F.H.W.A. Approved:		03/20/75

Approved By S. A. McLemore
State Drainage Engineer

Revision No.	Sheet No.	Index No.
94	1 of 2	251

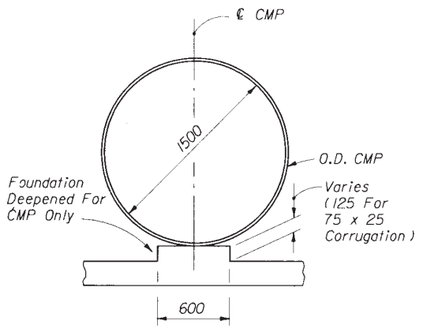

SECTION BB

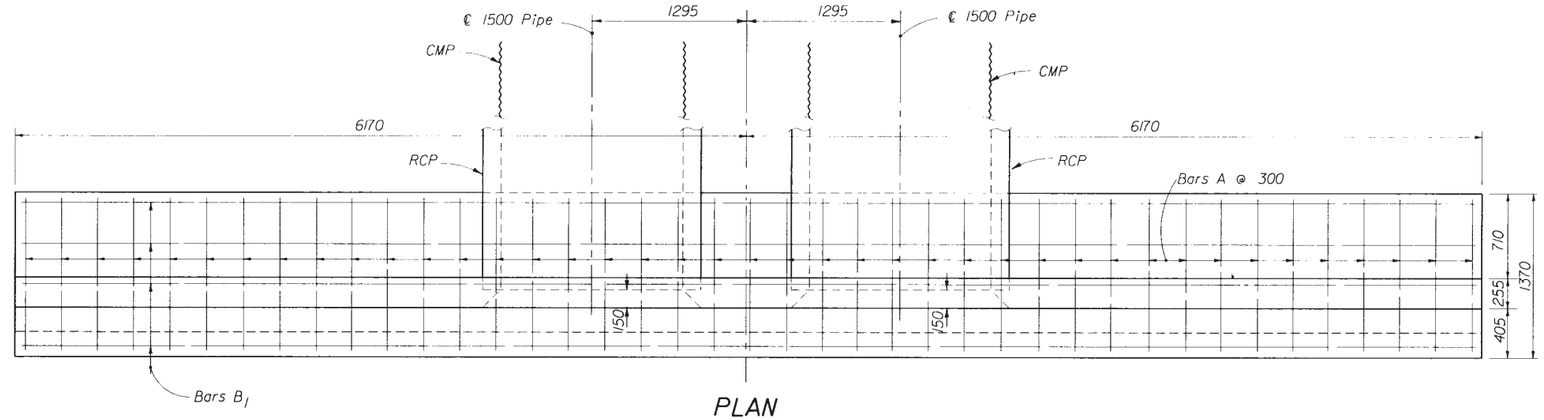

PLAN

(Showing Bar In Footing)

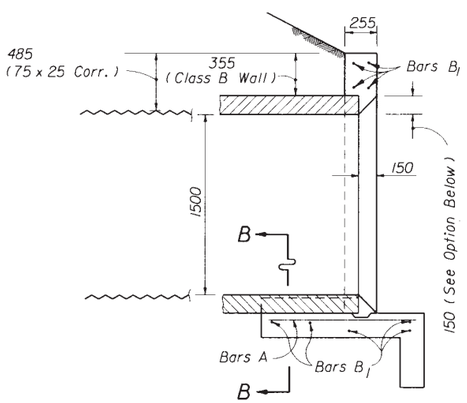

SECTION AA

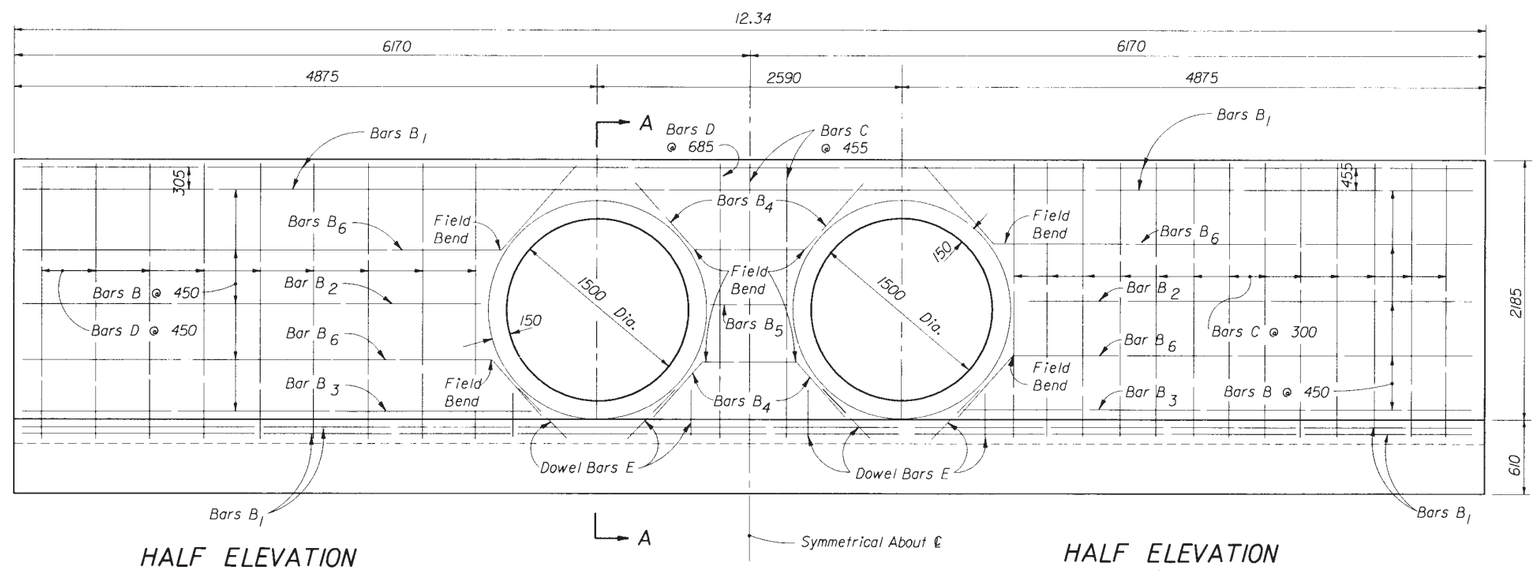

HALF ELEVATION

(Showing Bars In Front Face Of Wall)

HALF ELEVATION

(Showing Bars In Back Face Of Wall)

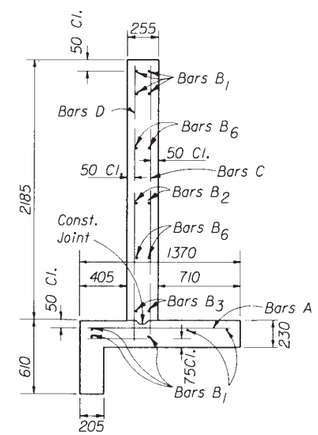

TYPICAL SECTION THRU ENDWALL

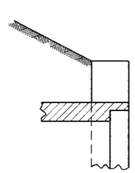

OPTIONAL ENTRANCE FOR CONCRETE PIPE

BILL OF REINFORCING STEEL

MARK	SIZE	NO. REQ'D	LENGTH	LOCATION	BENDING
A	15M	41	1270	Footing	Straight
B_1	15M	9	12240	Footing & Wall	Straight
B_2	15M	4	3810	Wall	Straight
B_3	15M	4	4190	Wall	Straight
B_4	15M	4	1830	Wall	Field Bend
B_5	15M	2	660	Wall	Straight
B_6	15M	8	4570	Wall	Field Bend
C	15M	29	2845	Footing & Wall	Bend
D	15M	20	2285	Footing & Wall	Straight
E	15M	16	510	Footing & Wall	Straight

BENDING DIAGRAM

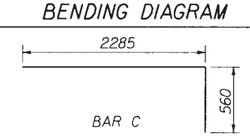

BAR C

NOTE: All bar dimensions are out to out

ESTIMATED QUANTITIES

ITEM	UNIT	RCP	CMP
Concrete Class II	m^3	10.5	10.6
Reinforcing Steel	kg	587	587

NOTE: See Sheet 1 of 2 For General Notes.

STATE OF FLORIDA DEPARTMENT OF TRANSPORTATION
ROAD DESIGN

STRAIGHT CONCRETE ENDWALLS

SINGLE AND DOUBLE 1500 PIPE

	Names	Dates
Designed By		
Drawn By	TWJ	11/49
Checked By	WHM	11/49
F.H.W.A. Approved:		03/20/75

Approved By S.A. McLemore
State Drainage Engineer

Revision No.	Sheet No.	Index No.
94	2 of 2	251

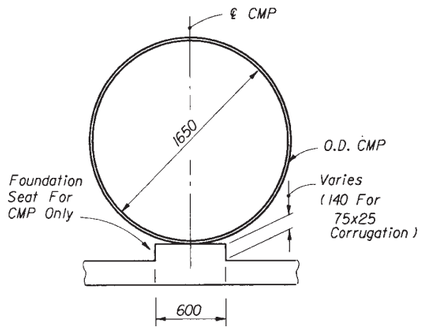

SECTION BB

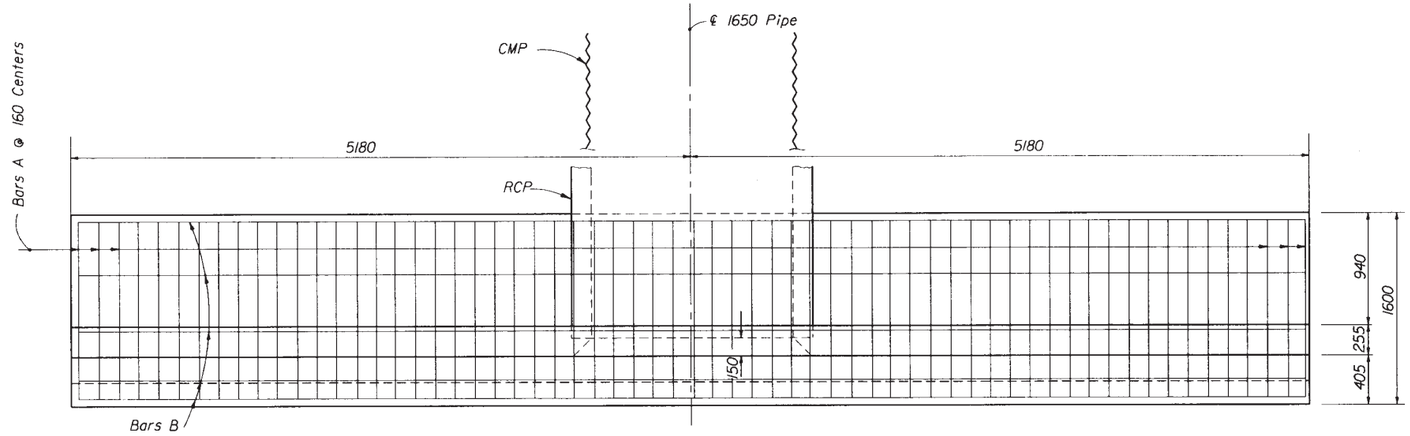

PLAN
(Showing Bars In Footing)

BILL OF REINFORCING STEEL

MARK	SIZE	NO. REQ'D	LENGTH	LOCATION	BENDING
A	15M	63	1500	Footing	Straight
B	15M	17	10260	Footing & Wall	Straight
C	15M	34	3020	Wall	Bend
D	15M	20	2465	Wall	Straight
E	15M	4	510	Wall	Straight

BENDING DIAGRAM

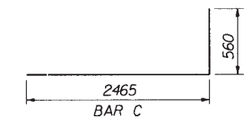

NOTE: All bar dimensions are out to out

ESTIMATED QUANTITIES

ITEM	UNIT	RCP	CMP
Concrete Class II	m^3	10.1	10.2
Reinforcing Steel	kg	660	660

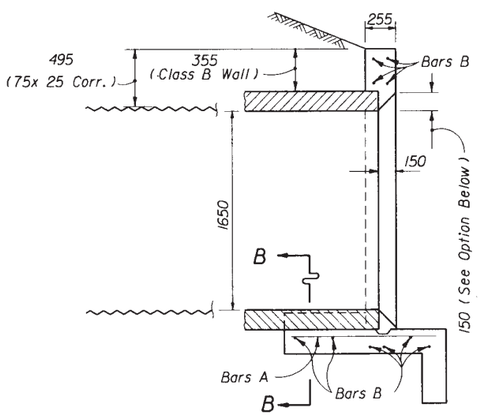

SECTION AA

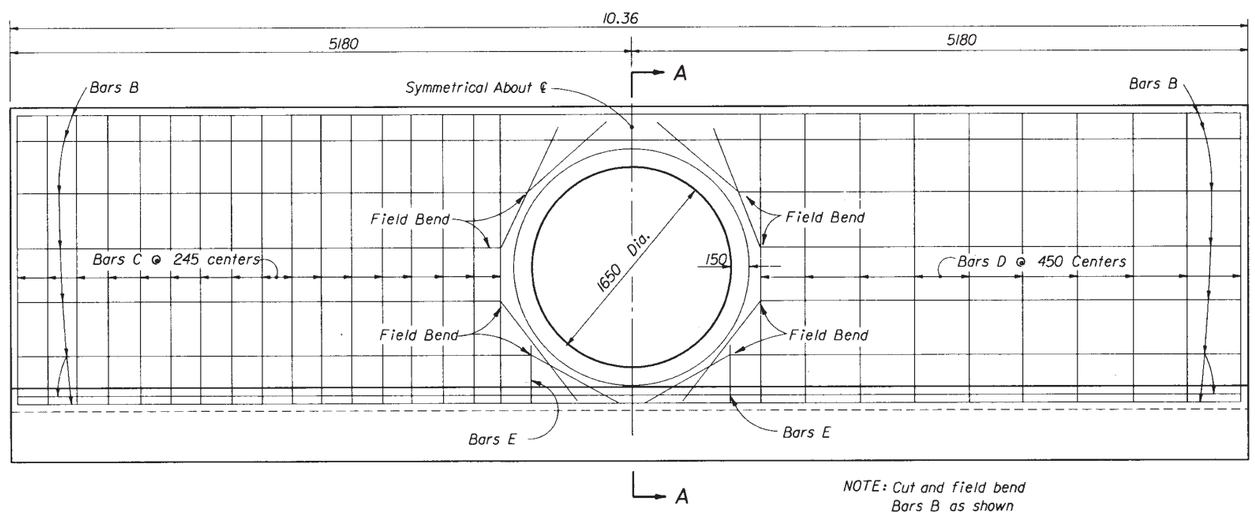

NOTE: Cut and field bend Bars B as shown

HALF ELEVATION
(Showing Bars In Back Face Of Wall)

HALF ELEVATION
(Showing Bars In Front Face Of Wall)

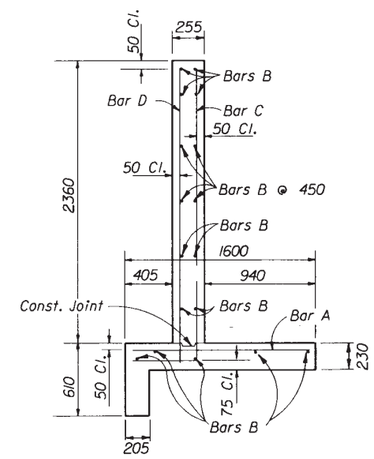

TYPICAL SECTION THRU ENDWALL

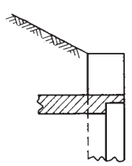

OPTIONAL ENTRANCE FOR CONCRETE PIPE

GENERAL NOTES

1. Endwalls may be cast-in-place or precast construction. Cast-in-place endwalls shall conform to the details on this index, design specifications AASHTO 1989. Precast construction which adheres to this Index, including any additional reinforcement required for handling which shall be determined by the Contractor or supplier, does not require additional approvals. Deviations from this Index, for precast units, shall require the approval of the State Drainage Engineer prior to construction. For precast construction, see Index No. 201 for opening and grouting details.
2. Reinforcing steel shall be either 400 MPa or 450 MPa.
3. Concrete shall be Class II except concrete meeting the requirements of ASTM C 478 (27 579 kPa) may be used in lieu of Class II concrete in precast units manufactured in plants which are under the Standard Operating Procedures for the inspection of precast drainage products.
4. Chamfer: All exposed edges and corners to be chamfered 20 mm unless otherwise shown.
5. Metal pipe shall be bituminous coated on all surfaces in contact with concrete and 300 mm beyond the boundary of contact. Any suitable bituminous material may be field applied.
6. Sodding shall be in accordance with Index No. 281 and paid for under the contract unit price for Sodding, M2.
7. Basis of payment for either cast-in-place or precast construction shall be the estimated quantities tabulated on the index. Concrete and reinforcing steel shall be paid for under the contract unit prices for Conc. Class II (Endwalls), M3 and Reinf. Steel (Roadway), KG.

STATE OF FLORIDA DEPARTMENT OF TRANSPORTATION
ROAD DESIGN

STRAIGHT CONCRETE ENDWALLS
SINGLE AND DOUBLE 1650 PIPE

	Names	Dates
Designed By	JLW	03/54
Drawn By		
Checked By	RCB	03/54
F.H.W.A. Approved:		10/07/80

Approved By S.A. McLemore
State Drainage Engineer

Revision No.	Sheet No.	Index No.
94	1 of 2	252

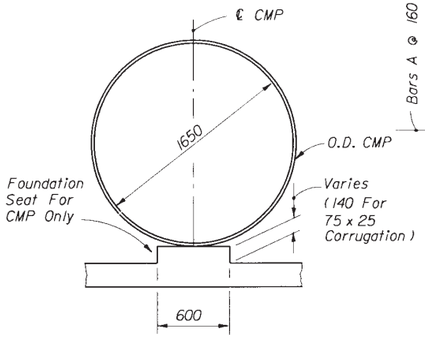

SECTION BB

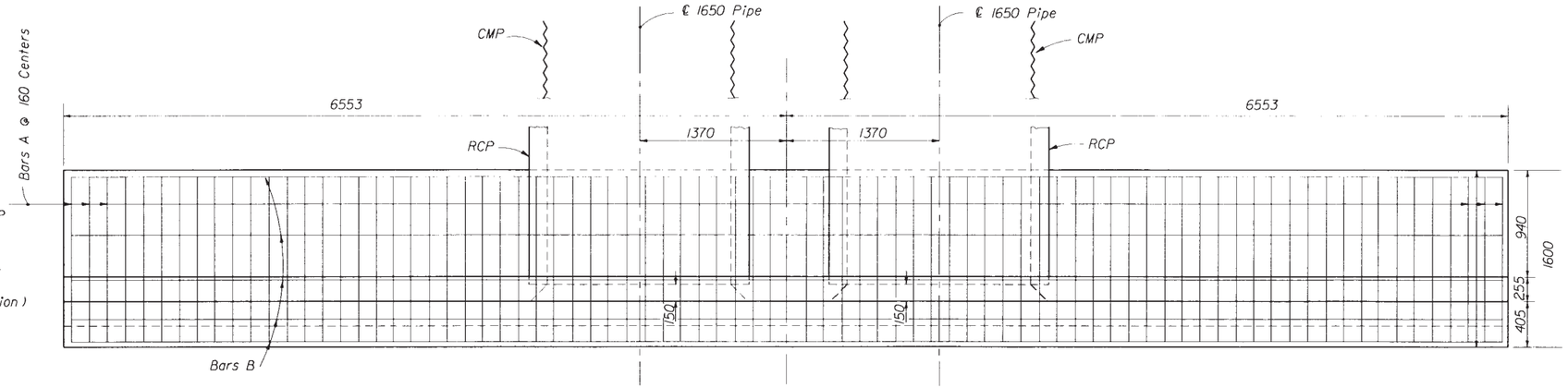

PLAN
(Showing Bars In Footing)

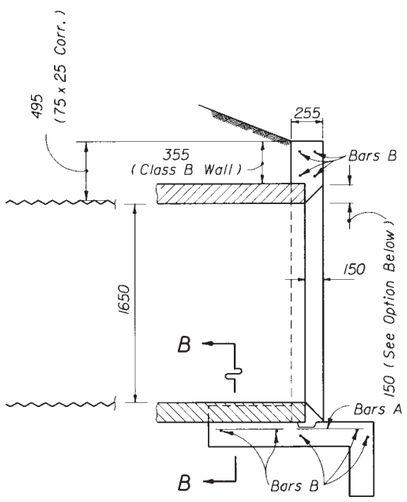

SECTION AA

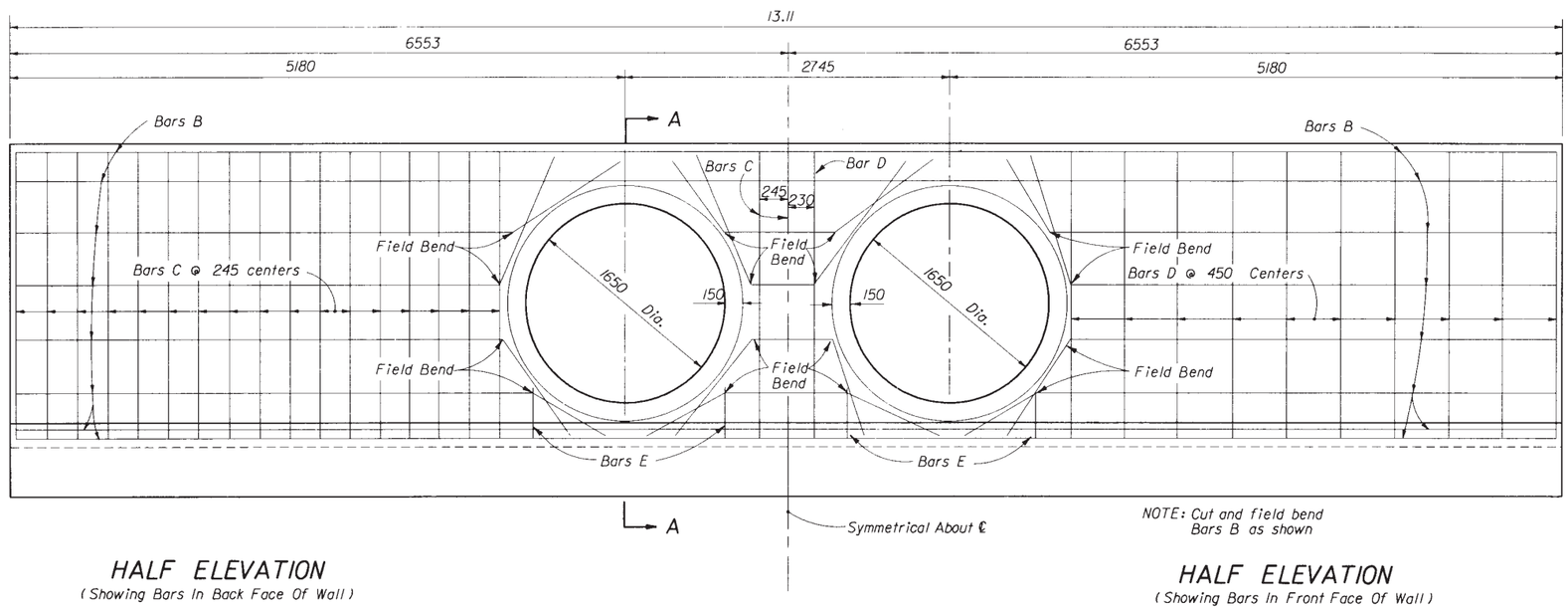

HALF ELEVATION
(Showing Bars In Back Face Of Wall)

HALF ELEVATION
(Showing Bars In Front Face Of Wall)

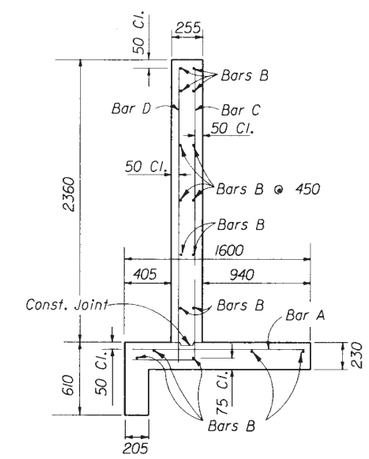

TYPICAL SECTION THRU ENDWALL

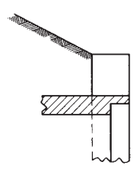

OPTIONAL ENTRANCE FOR CONCRETE PIPE

BILL OF REINFORCING STEEL					
MARK	SIZE	NO. REQ'D	LENGTH	LOCATION	BENDING
A	15M	80	1500	Footing	Straight
B	15M	17	13000	Footing & Wall	Straight
C	15M	37	3020	Wall	Bend
D	15M	22	2465	Wall	Straight
E	15M	8	510	Wall	Straight

BENDING DIAGRAMS

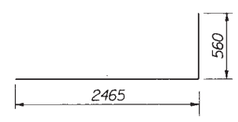

BAR C
NOTE: All bar dimensions are out to out

ESTIMATED QUANTITIES			
ITEM	UNIT	RCP	CMP
Concrete Class II	m^3	5.0	5.1
Reinforcing Steel	kg	797	797

NOTE: See Sheet 1 of 2 for General Notes.

STATE OF FLORIDA DEPARTMENT OF TRANSPORTATION
ROAD DESIGN

STRAIGHT CONCRETE ENDWALLS
SINGLE AND DOUBLE 1650 PIPE

	Names	Dates
Designed By	JSP	11/79
Drawn By	FWT	11/79
Checked By		
F.H.W.A. Approved:		10/07/80

Approved By S A McLemore
State Drainage Engineer

Revision No.	Sheet No.	Index No.
94	2 of 2	252

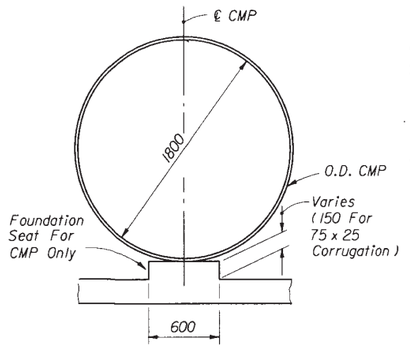

SECTION BB

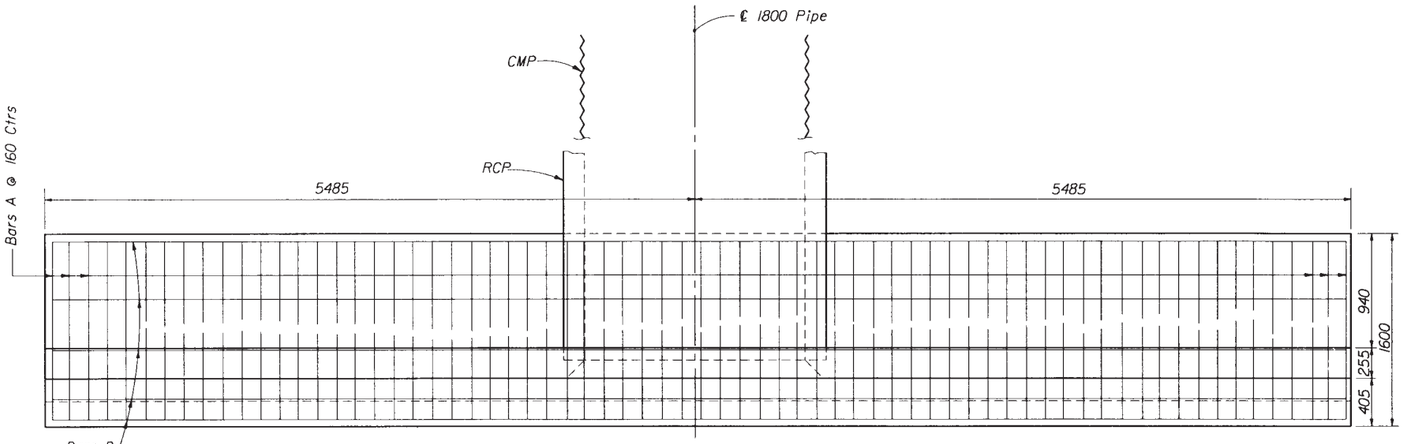

PLAN

(Showing Bars In Footing)

BILL OF REINFORCING STEEL

MARK	SIZE	NO. REQ'D	LENGTH	LOCATION	BENDING
A	15M	68	1.50	Footing	Straight
B	15M	17	10.87	Footing & Wall	Straight
C	15M	34	3.17	Wall	Bend
D	15M	20	2.62	Wall	Straight
E	15M	4	0.76	Wall	Straight
F	15M	4	0.46	Wall	Straight

BENDING DIAGRAM

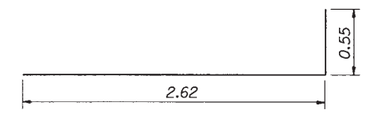

BAR C

NOTE: All bar dimensions are out to out

ESTIMATED QUANTITIES

ITEM	UNIT	RCP	CMP
Concrete Class II	m^3	11.0	11.1
Reinforcing Steel	kg	704	704

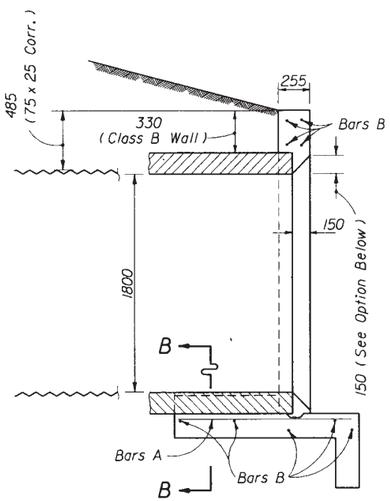

SECTION AA

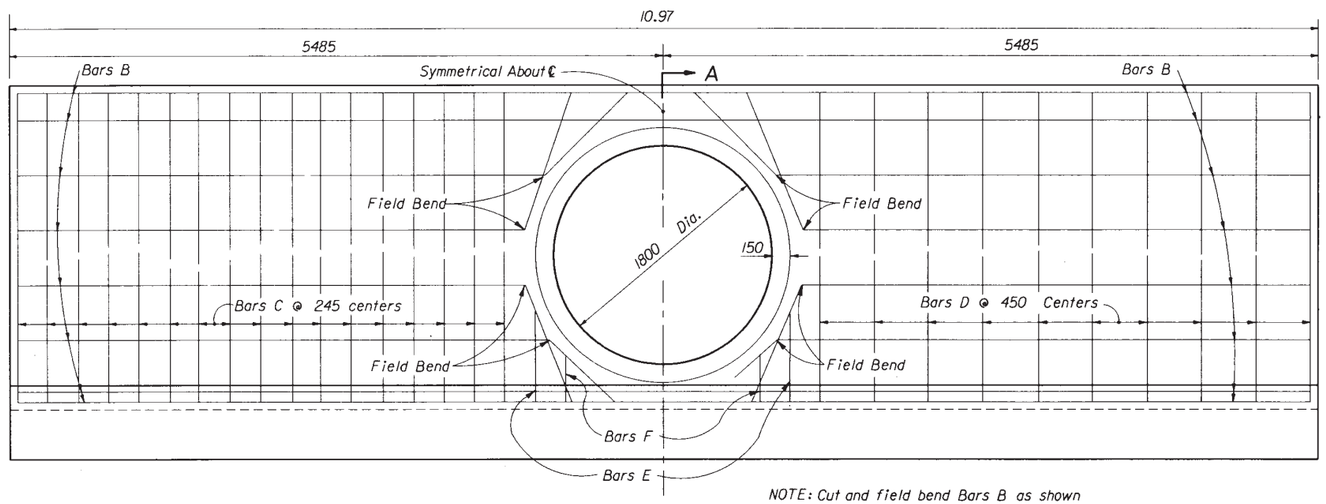

NOTE: Cut and field bend Bars B as shown

HALF ELEVATION

(Showing Bars In Back Face Of Wall)

HALF ELEVATION

(Showing Bars In Front Face Of Wall)

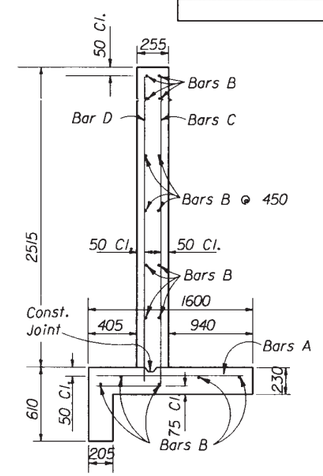

TYPICAL SECTION
THRU ENDWALL

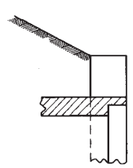

OPTIONAL ENTRANCE
FOR CONCRETE PIPE

GENERAL NOTES

1. Endwalls may be cast-in-place or precast construction. Cast-in-place endwalls shall conform to the details on this index, design specifications AASHTO 1989. Precast construction which adheres to this Index, including any additional reinforcement required for handling which shall be determined by the Contractor or supplier, does not require additional approvals. Deviations from this Index, for precast units, shall require the approval of the State Drainage Engineer prior to construction. For precast construction, see Index No. 201 for opening and grouting details.
2. Reinforcing steel shall be either 400 MPa or 450 MPa.
3. Concrete shall be Class II except concrete meeting the requirements of ASTM C 478 (27579 kPa) may be used in lieu of Class II concrete in precast units manufactured in plants which are under the Standard Operating Procedures for the inspection of precast drainage products.
4. Chamfer: All exposed edges and corners to be chamfered 20 mm unless otherwise shown.
5. Metal pipe shall be bituminous coated on all surfaces in contact with concrete and 300 mm beyond the boundary of contact. Any suitable bituminous material may be field applied.
6. Sodding shall be in accordance with Index No. 281 and paid for under the contract unit price for Sodding, M2.
7. Basis of payment for either cast-in-place or precast construction shall be the estimated quantities tabulated on the Index. Concrete and reinforcing steel shall be paid for under the contract unit prices for Conc. Class II (Endwalls), M3 and Reinf. Steel (Roadway), KG.

STATE OF FLORIDA DEPARTMENT OF TRANSPORTATION
ROAD DESIGN

STRAIGHT CONCRETE ENDWALLS

SINGLE AND DOUBLE 1800 PIPE

	Names	Dates
Designed By	EVC	10/55
Drawn By		
Checked By	WHW	10/55
F.H.W.A. Approved:		03/20/75

Approved By S.A. McLemore
State Drainage Engineer

Revision No.	Sheet No.	Index No.
94	1 of 2	253

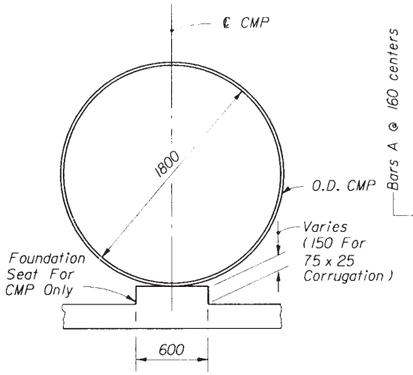

SECTION BB

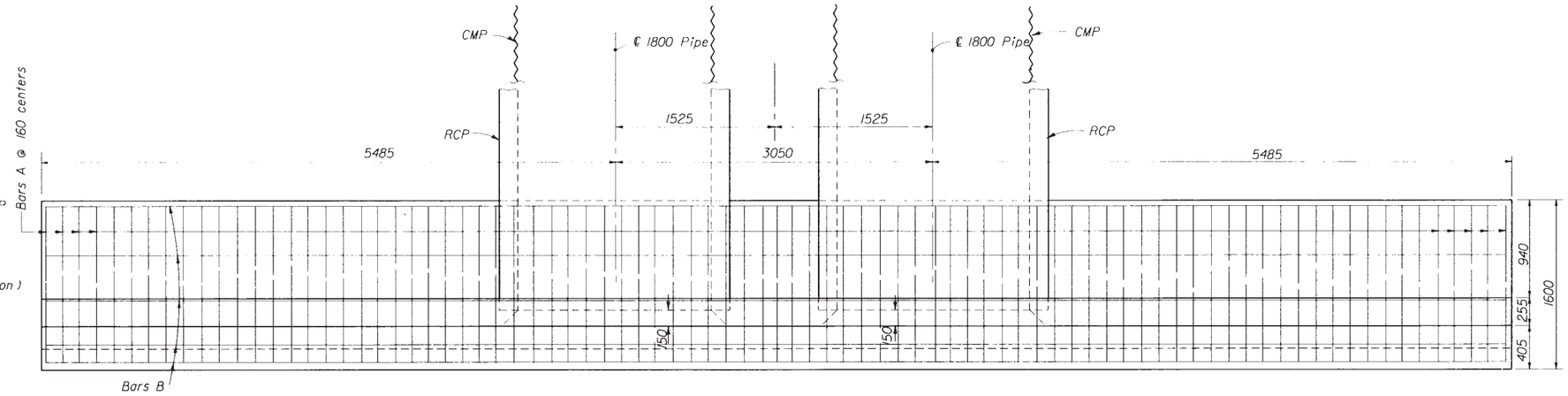

PLAN

(Showing Bars In Footing)

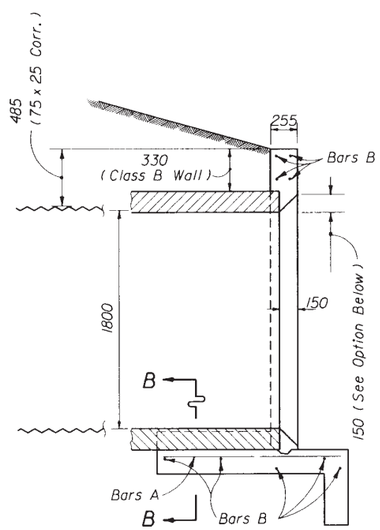

SECTION AA

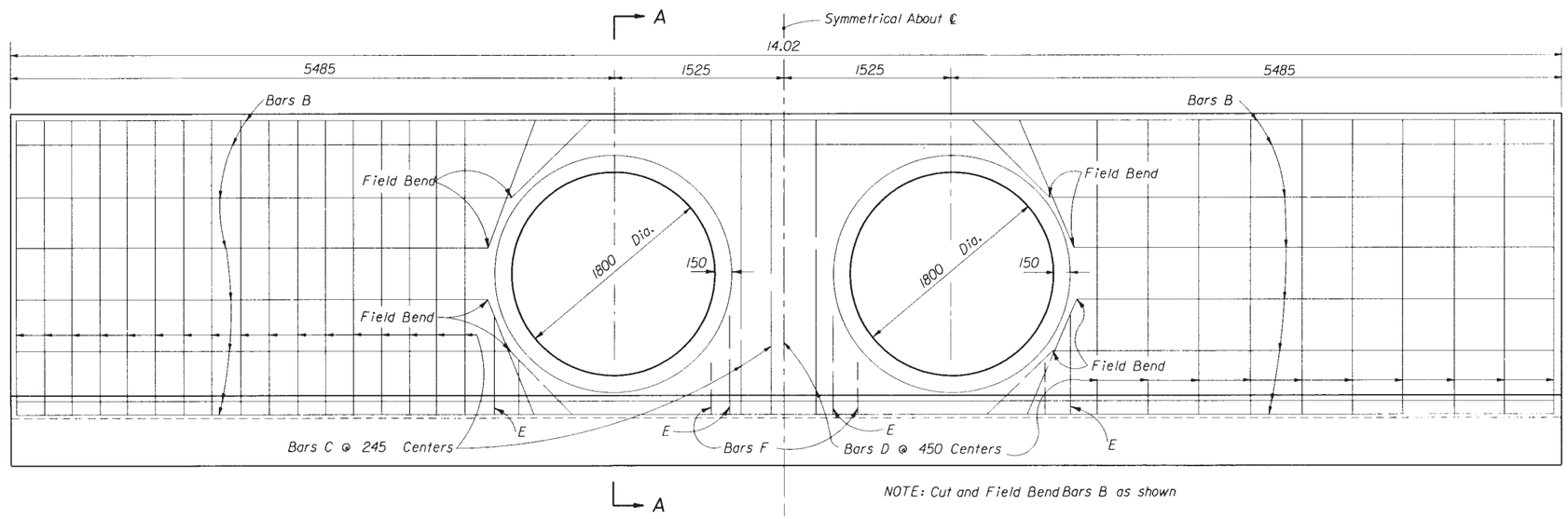

NOTE: Cut and Field Bend Bars B as shown

HALF ELEVATION

(Showing Bars In Back Face Of Wall)

HALF ELEVATION

(Showing Bars In Front Face Of Wall)

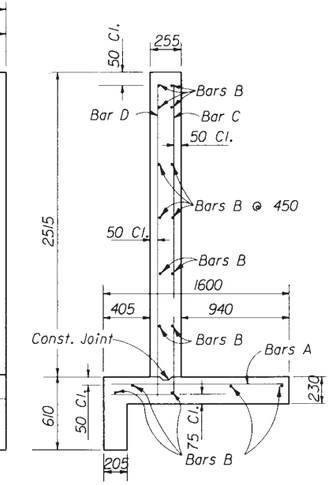

TYPICAL SECTION
THRU ENDWALL

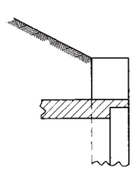

OPTIONAL ENTRANCE
FOR CONCRETE PIPE

BILL OF REINFORCING STEEL

MARK	SIZE	NO. REQ'D	LENGTH	LOCATION	BENDING
A	15M	85	1.50	Footing	Straight
B	15M	17	13.92	Footing & Wall	Straight
C	15M	38	3.17	Wall	Bend
D	15M	23	2.62	Wall	Straight
E	15M	8	0.76	Wall	Straight
F	15M	8	0.46	Wall	Straight

BENDING DIAGRAM

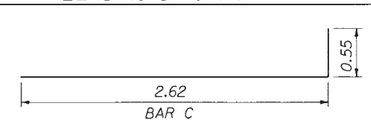

NOTE: All bar dimensions are out to out

ESTIMATED QUANTITIES

ITEM	UNIT	RCP	CMP
Concrete Class II	m^3	13.4	13.6
Reinforcing Steel	kg	864	864

NOTE: See Sheet 1 of 2 for General Notes.

STATE OF FLORIDA DEPARTMENT OF TRANSPORTATION
ROAD DESIGN

STRAIGHT CONCRETE ENDWALLS

SINGLE AND DOUBLE 1800 PIPE

	Names	Dates
Designed By	EVC	10/55
Drawn By		
Checked By	WHW	10/55
F.H.W.A. Approved:		07/07/75

Approved By S. A. McLemore
State Drainage Engineer

Revision No.	Sheet No.	Index No.
94	2 of 2	253

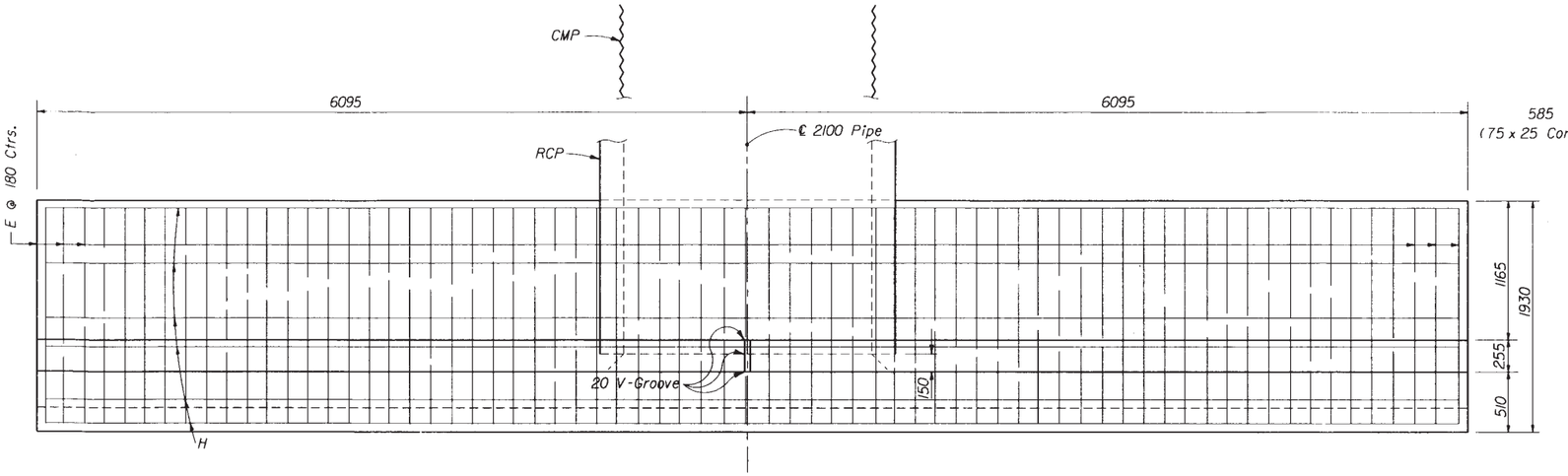

PLAN
(Showing Bars In Footing)

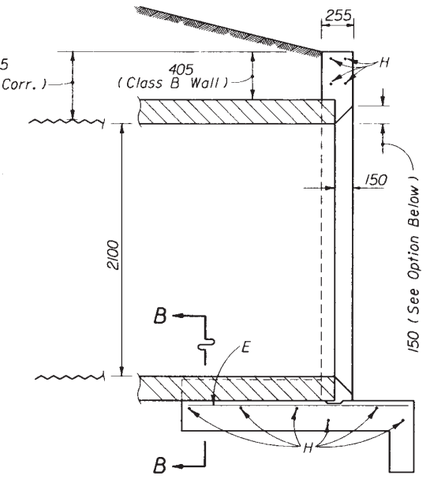

SECTION AA

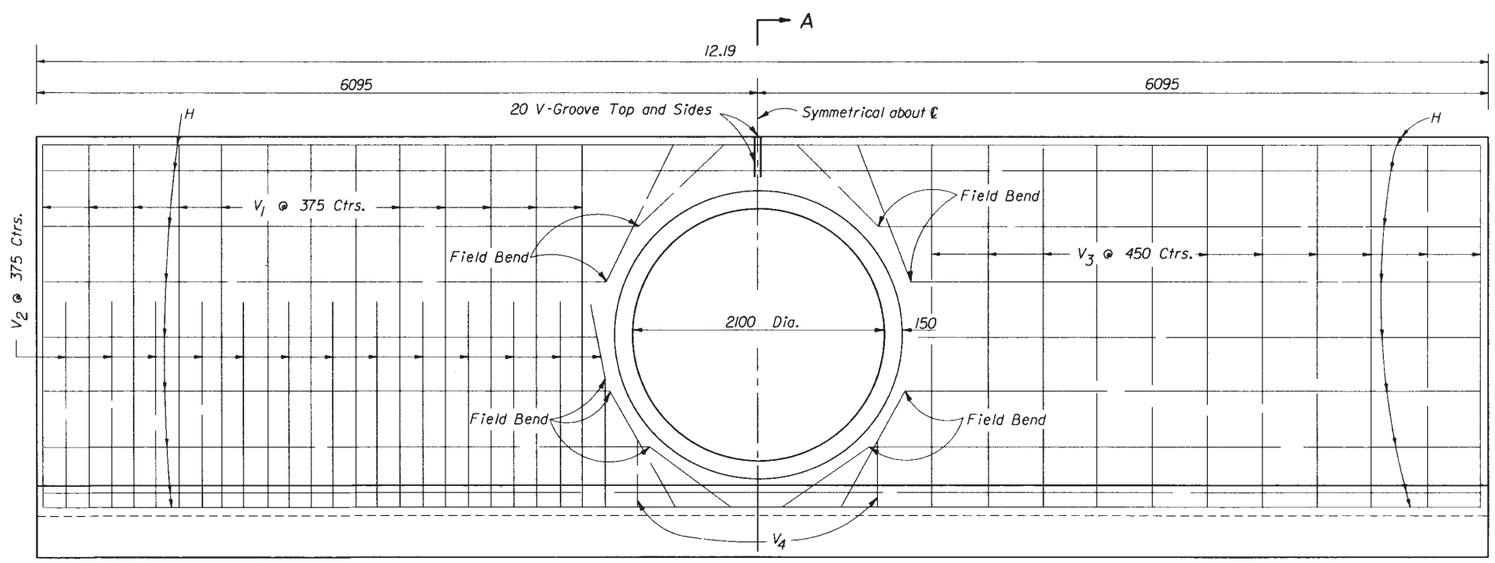

HALF ELEVATION
(Showing Bars In Back Face Of Wall)

NOTE: Cut and field bend Bars H as shown

HALF ELEVATION
(Showing Bars In Front Face Of Wall)

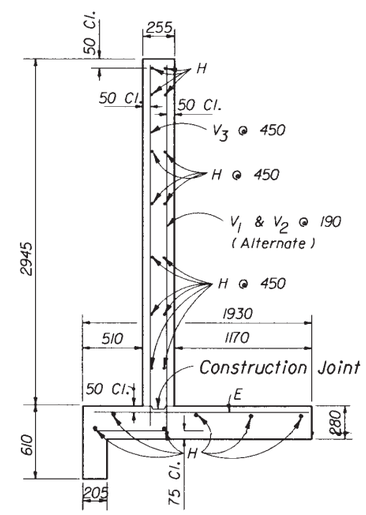

TYPICAL SECTION THRU ENDWALL

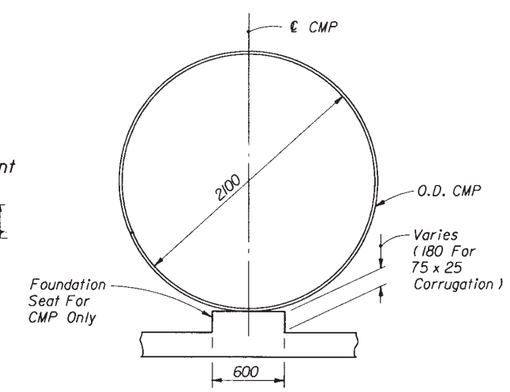

SECTION BB

BILL OF REINFORCING STEEL

MARK	SIZE	NO. REQ'D	LENGTH
E	20M	69	1.83
H	15M	20	12.09
V_1	20M	26	3.76
V_2	20M	26	2.39
V_3	15M	22	3.10
V_4	15M	4	0.61

BENDING DIAGRAM

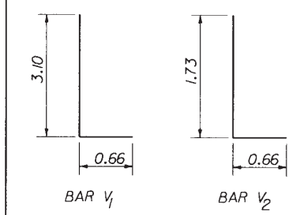

NOTE: All bar dimensions are out to out

ESTIMATED QUANTITIES

ITEM	UNIT	RCP	CMP
Concrete Class II	m^3	15.3	15.5
Reinforcing Steel	kg	1130	1130

GENERAL NOTES

1. Endwalls may be cast-in-place or precast construction. Cast-in-place endwalls shall conform to the details on this index, design specifications AASHTO 1989. Precast construction which adheres to this Index, including any additional reinforcement required for handling which shall be determined by the Contractor or supplier, does not require additional approvals. Deviations from this Index, for precast units, shall require the approval of the State Drainage Engineer prior to construction. For precast construction, see Index No. 201 for opening and grouting details.

2. Reinforcing steel shall be either 400 MPa or 450 MPa.

3. Concrete shall be Class II except concrete meeting the requirements of ASTM C 478 (27 579 028 Pa) may be used in lieu of Class II concrete in precast units manufactured in plants which are under the Standard Operating Procedures for the inspection of precast drainage products.

4. Chamfer: All exposed edges and corners to be chamfered 20 mm unless otherwise shown.

5. Metal pipe shall be bituminous coated on all surfaces in contact with concrete and 300 mm beyond the boundary of contact. Any suitable bituminous material may be field applied.

6. Sodding shall be in accordance with Index No. 281 and paid for under the contract unit price for Sodding, M2.

7. Basis of payment for either cast-in-place or precast construction shall be the estimated quantities tabulated on the Index. Concrete and reinforcing steel shall be paid for under the contract unit prices for Conc. Class II (Endwalls), M3 and Reinf. Steel (Roadway), KG.

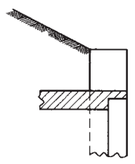

OPTIONAL ENTRANCE FOR CONCRETE PIPE

STATE OF FLORIDA DEPARTMENT OF TRANSPORTATION
ROAD DESIGN

STRAIGHT CONCRETE ENDWALL
SINGLE 2100 PIPE

	Names	Dates
Designed By		
Drawn By	WHW	07/58
Checked By	HCG	07/58
F.H.W.A. Approved:		03/20/75

Approved By: State Drainage Engineer

Revision No.	Sheet No.	Index No.
94	1 of 1	255

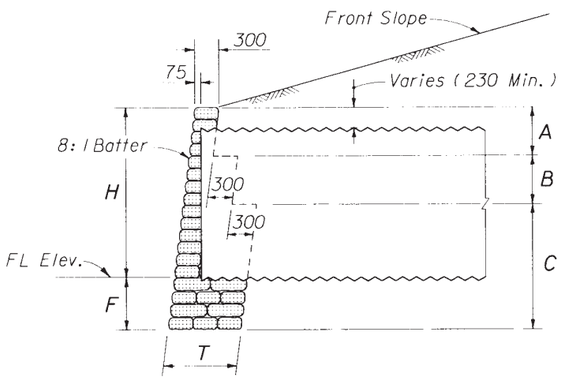

CORRUGATED METAL PIPE

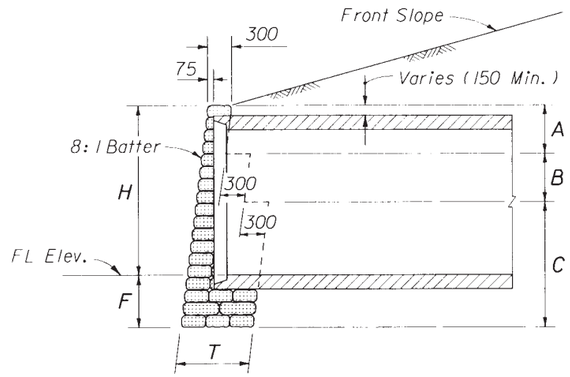

CONCRETE PIPE

SECTION YY

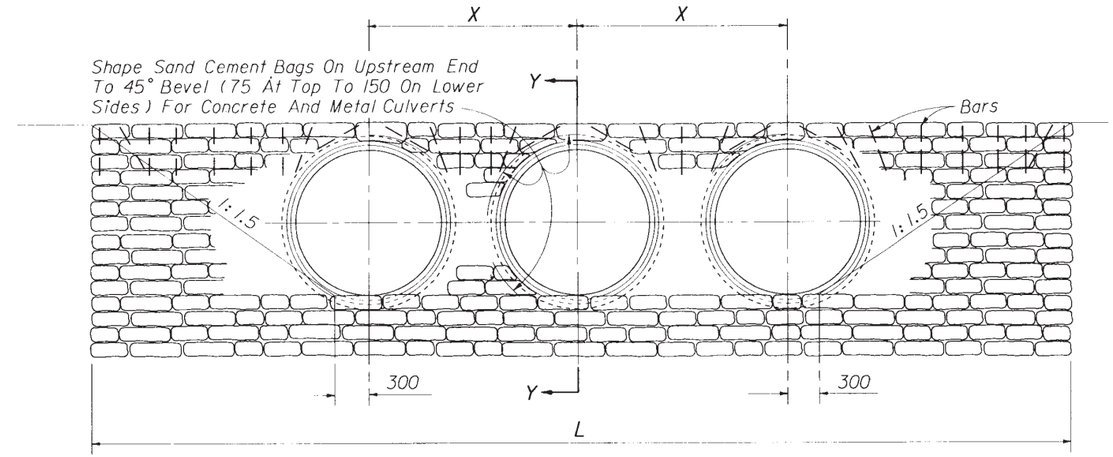

Note: (1) For concrete and corrugated metal pipes. Concrete pipe shown.

(2) The top row of riprap bags shall be secured by pinning, using 15M reinforcing bars 455 mm in length, as follows:

(a) The end bags shall be secured using two bars per bag, one vertical and one diagonal as shown.

(b) The next to last bag on each end shall be secured with two bars vertically.

(c) Bags located over the pipe shall be secured by a bar which is driven diagonally except that for concrete pipe two bars shall be used for single bags above the pipe.

(d) Intermediate bags shall be secured with a single bar.

Bars shall be driven to one inch below the surface of the bag.

The cost of furnishing and installing the bars shall be included in the cost of the riprap.

FRONT ELEVATION

TABLE OF DIMENSIONS AND QUANTITIES FOR ONE ENDWALL

SIZE OF PIPE	H	T	A	B	C	F	X	ONE PIPE CULVERTS			TWO PIPE CULVERTS			THREE PIPE CULVERTS			FOUR PIPE CULVERTS		
								L	RIPRAP m³		L	RIPRAP m³		L	RIPRAP m³		L	RIPRAP m³	
									CP	CMP		CP	CMP		CP	CMP		CP	CMP
450	0.69	0.30	1.22	0	0	0.53	0.86	2.67	0.9	0.9	3.53	1.1	1.2	4.39	1.4	1.5	5.25	1.6	1.8
600	0.84	0.61	0.61	0.76	0	0.53	1.04	3.12	1.8	1.9	4.16	2.3	2.4	5.20	2.8	3.1	6.24	3.3	3.6
750	1.02	0.61	0.61	0.97	0	0.56	1.30	3.66	2.5	2.6	4.96	3.2	3.4	6.26	3.9	4.2	7.56	4.6	5.0
900	1.17	0.61	0.61	1.12	0	0.56	1.55	4.11	3.1	3.2	5.66	4.0	4.4	7.21	4.8	5.3	8.76	5.7	6.3
1050	1.35	0.91	0.61	0.61	0.71	0.58	1.83	4.65	4.9	5.1	6.48	6.3	6.8	8.31	7.8	8.6	10.14	9.4	10.2
1200	1.50	0.91	0.61	0.61	0.86	0.58	2.06	5.10	5.9	6.2	7.16	7.6	8.3	9.22	9.4	10.3	11.28	11.1	12.4
1350	1.68	0.91	0.61	0.61	1.07	0.61	2.34	5.64	7.3	7.7	7.98	9.5	10.3	10.32	11.7	13.0	12.66	13.9	15.6
1500	1.83	0.91	0.61	0.61	1.22	0.61	2.59	6.09	8.4	8.9	8.68	11.0	12.1	11.27	13.6	15.1	13.86	16.1	18.2
1650	2.01	0.91	0.61	0.61	1.43	0.64	2.82	6.63	10.1	10.8	9.45	13.2	14.5	12.27	16.2	18.1	15.09	19.2	21.8
1800	2.16	0.91	0.61	0.61	1.58	0.64	3.05	7.08	11.5	12.2	10.13	14.8	16.4	13.18	18.3	20.5	16.23	21.6	24.7
1950	2.34	0.91	0.61	0.61	1.78	0.66	3.28	7.62	13.4	14.3	10.90	17.3	19.1	14.18	21.3	23.9	17.46	25.2	28.7
2100	2.49	0.91	0.61	0.61	1.93	0.66	3.56	8.07	14.9	16.0	11.63	19.3	21.5	15.19	23.8	26.9	18.75	28.2	32.4

STATE OF FLORIDA DEPARTMENT OF TRANSPORTATION
ROAD DESIGN

STRAIGHT SAND-CEMENT ENDWALLS

	Names	Dates
Designed By		
Drawn By	JBW	07/88
Checked By	JVG/EGR	08/88

Approved By S.A. McLemore
State Drainage Engineer

F.H.W.A. Approved: 12/06/76

Revision No.	Sheet No.	Index No.
94	1 of 1	258

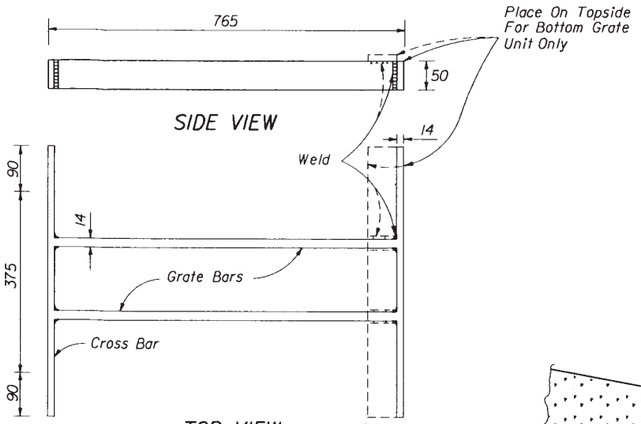

TOP VIEW
GRATE TYPE NO. 1

Pipe Size	Grate Bars Reqd.	Grate Wt.
375	2	14.2

Bars to be evenly spaced across dimension 'D'.
All bars 13 x 25.

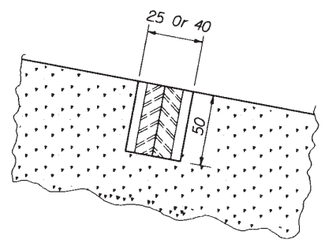

SECTION AA

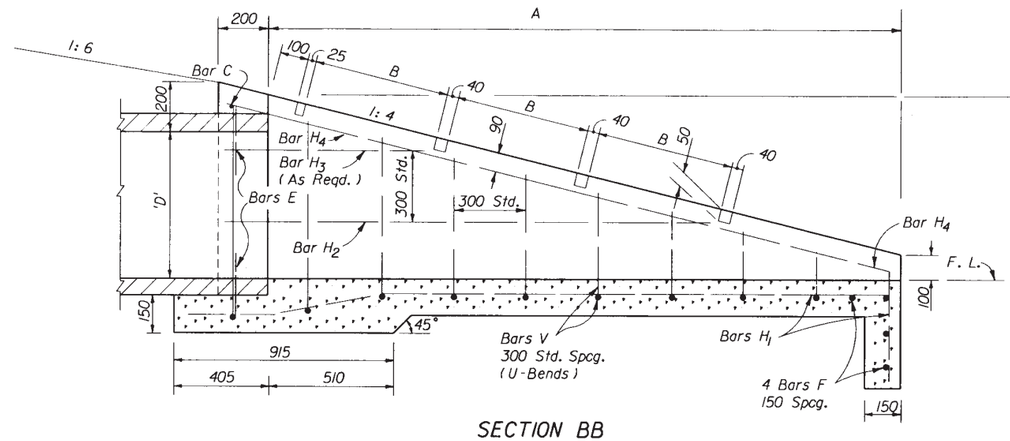

SECTION BB

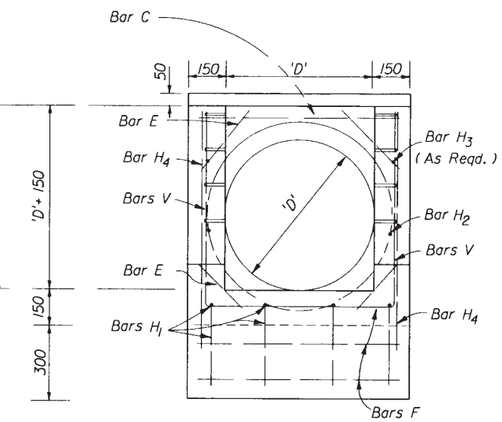

END VIEW

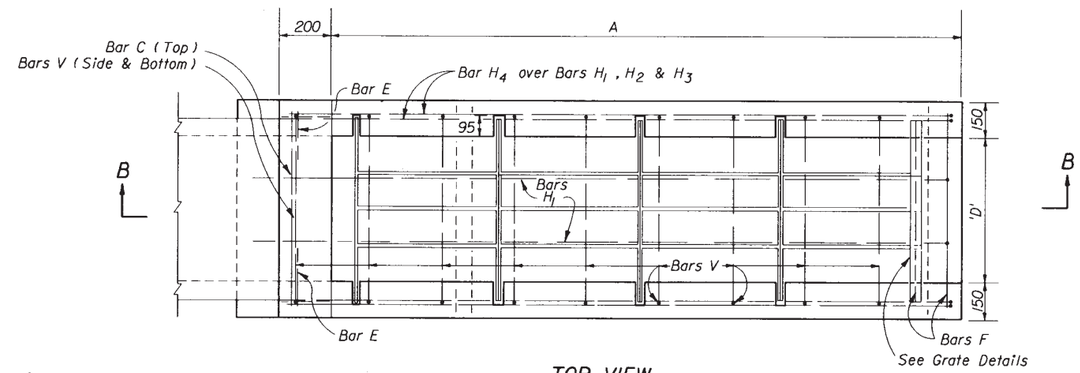

TOP VIEW

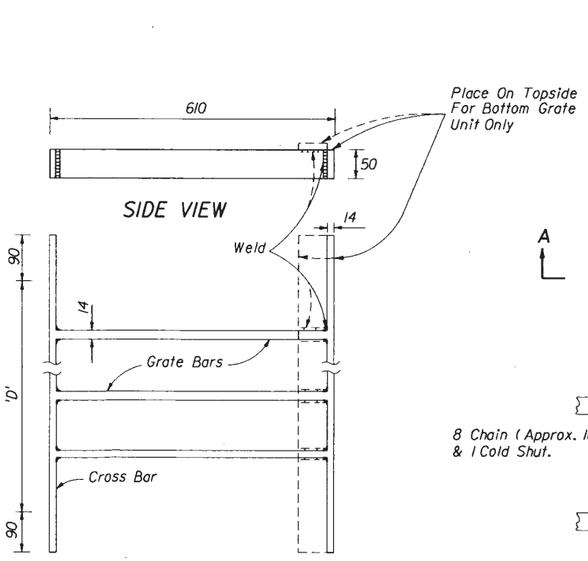

TOP VIEW
GRATE TYPE NO. 2

Pipe Size	Grate Bars Reqd.	Grate Wt. kg
450	3	16.52
600	4	21.37
750	5	26.22

Bars to be evenly spaced across dimension 'D'.
All bars 14 x 50.

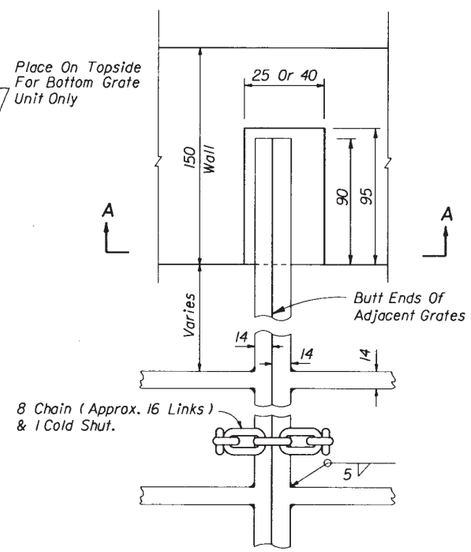

TOP VIEW

GRATE, SEAT, WELD & CHAIN DETAIL

TABLE OF DIMENSIONS AND QUANTITIES

Slope	Pipe Size D	A	B	Conc. Class I (m^3)	Reinf. Steel (kg)	Number Of Grates Req'd Type No. 1	Number Of Grates Req'd Type No. 2	Total Grate Wt. (kg)	Sodding (m^2)	Slope Transition Offset	Slope Transition L (m)
1:4	375	1700	725	0.65	39	2	0	28.40	13	1150	11.5
	450	2000	570	0.77	52	0	3	49.56	14	1300	13.0
	600	2600	570	1.26	69	0	4	85.48	16	1600	16.0
	750	3200	570	1.78	93	0	5	131.10	18	1900	19.0

GENERAL NOTES

1. This endwall is to be used only in the clear zone for the drainage of medians and other areas having low design velocities and negligible debris. Grates exposed to salt water shall be designated in the plan as Alternate G.
2. Reinforcing steel : All bars are size 15M. Spacings shown are center to center. Laps to be 300 mm minimum. Clearance is 50 mm except as noted.

   Square welded wire fabric (two cages max.) having an equivalent cross sectional area (130 mm^2) may be substituted for bar reinforcement.
3. Grates shall be ASTM A 242, A 441, A 572 or A 588, 425 mPa steel, and galvanized in accordance with Section 962-7 of the Standard Specifications.
4. Endwall to be paid for under the contract unit price for U-Endwall With Grate, EA. Payment shall include cost of concrete, reinforcing steel, grate, and accessories. Quantities shown are for estimating purposes only.
5. Sod slopes 1.5 m each side and above endwall. Sodding to be paid for under contract unit price for sodding.
6. Precasting of this endwall will be permitted. Precast units shall conform to the dimensions shown or in accordance with approved shop drawings. Request for shop drawing approval shall be directed to the State Drainage Engineer. Use Index No. 201 for opening and grouting details.
7. Concrete meeting the requirements of A.S.T.M. C 478 (27 579 kPa) may be used in lieu of Class I concrete for precast units manufactured in plants which are under the Standard Operating Procedures for the inspection of precast drainage products.

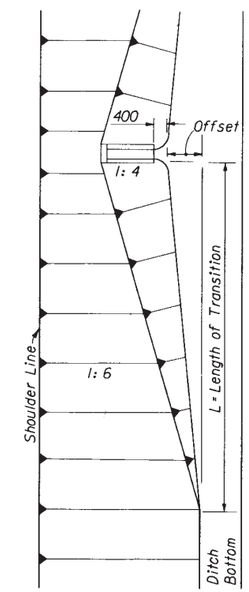

FRONT SLOPE TRANSITION AT ENDWALL

STATE OF FLORIDA DEPARTMENT OF TRANSPORTATION
ROAD DESIGN

U-TYPE CONCRETE ENDWALLS WITH GRATES

375 TO 750 PIPE

	Names	Dates
Designed By	EGR	06/77
Drawn By	HKH	06/77
Checked By	JVG	06/77
F.H.W.A. Approved:		07/15/77

Approved By S. A. McGenore
State Drainage Engineer

Revision No.	Sheet No.	Index No.
94	1 of 1	260

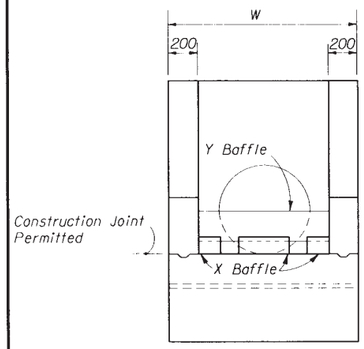

END VIEW

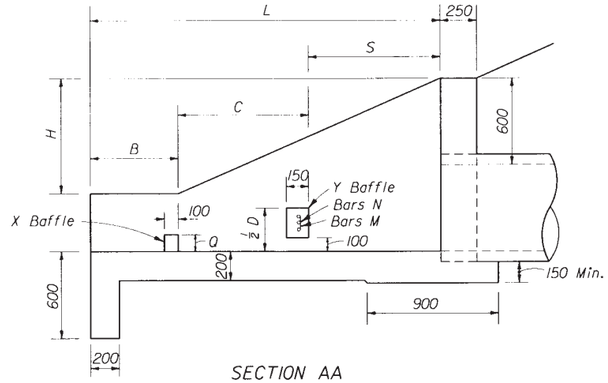

SECTION AA

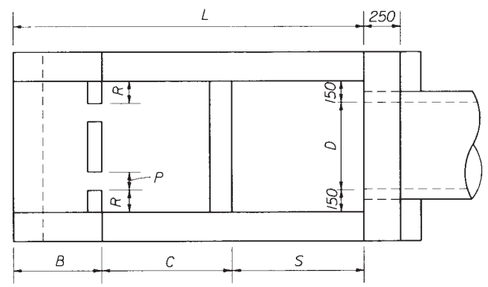

PLAN

DIMENSIONAL DETAILS

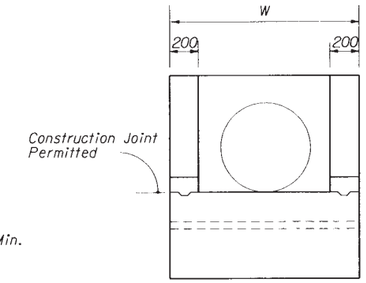

END VIEW

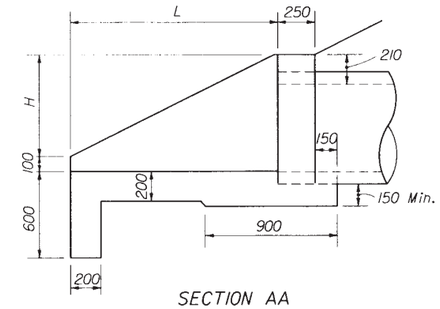

SECTION AA

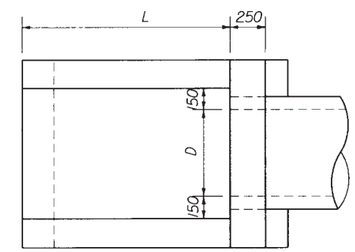

PLAN

DIMENSIONAL DETAILS

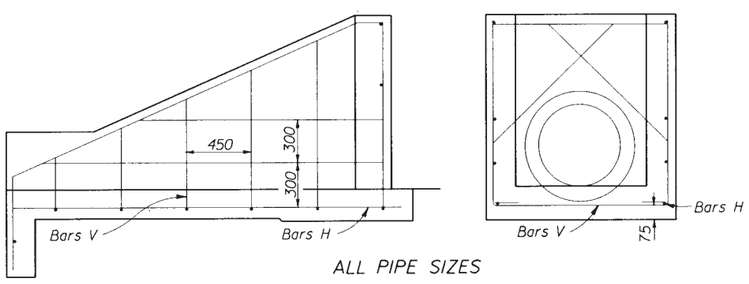

ALL PIPE SIZES

SIDE VIEW AND BACKWALL SECTION

REINFORCING DETAIL

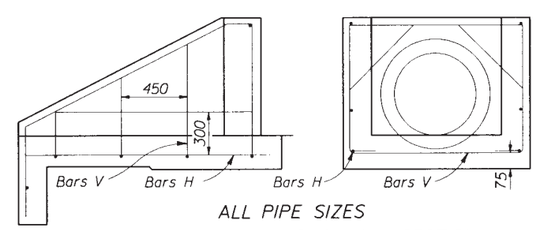

ALL PIPE SIZES

SIDE VIEW AND BACKWALL SECTION

REINFORCING DETAIL

DIMENSIONS AND QUANTITIES FOR ONE U-ENDWALL

Pipe Size								X Baffle			Y Baffle Reinf. Steel		Concrete Class I	Reinf. Steel
D	Area m^2	L	H	W	S	B	C	P	Q	R	Bar M	Bar N	m^3	kg
375	0.11	1740	700	1075	680	380	680	100	100	100	2-15M	1-15M	1.23	50
450	0.16	1975	730	1150	760	455	760	100	100	125	3-15M	2-15M	1.44	61
600	0.29	2400	800	1300	900	600	900	125	125	150	4-15M	3-15M	1.93	77
750	0.46	2880	880	1450	1060	760	1060	125	125	175	4-15M	4-15M	2.55	98

WITH BAFFLES

DIMENSIONS AND QUANTITIES FOR ONE U-ENDWALL

Pipe Size					Concrete Class I	Reinf. Steel
D	Area m^2	L	H	W	m^3	kg
375	0.11	970	485	1075	0.68	28
450	0.16	1120	560	1150	0.80	30
600	0.29	1420	710	1300	1.07	39
750	0.46	1720	860	1450	1.44	46

WITHOUT BAFFLES

GENERAL NOTES

1. Baffles to be constructed only when called for in plans.
2. When steel grating is required on endwall see Sheet 3 of 3 for details.
3. All reinforcing 15M bars with 50 mm clearance except as noted.
4. All angles, channels and bars shall be ASTM A 242, A 441, A 572 or A 588, 425 MPa steel, and galvanized in accordance with Section 962-7 of the Standard Specifications.
5. Channel section C 75 x 8.9 may be substituted for C 100 x 8 channel.
6. Precasting of this endwall will be permitted. Precast units shall conform to the dimensions shown or in accordance with approved shop drawings. Request for shop drawing approval shall be directed to the State Drainage Engineer. Use Index No. 201 for opening and grouting details.
7. Concrete meeting the requirements of ASTM C-478 (27 579 kPa) may be used in lieu of Class I concrete in precast units manufactured in plants which are under the Standard Operating Procedures for the inspection of precast drainage products.
8. Sodding shall be in accordance with Index No. 281, and paid for under the contract unit price for Sodding, M2.
9. Endwall to be paid for under the contract unit price for Conc. Class I (Endwalls), M3 and Reinf. Steel (Roadway), KG. Cost of grates to be paid for under the contract unit price for Endwall Grate, KG, plan quantity. Cost of galvanized bolts and nuts to be included in the bid price for the grate.

ENDWALLS FOR 1:2 SLOPES

STATE OF FLORIDA DEPARTMENT OF TRANSPORTATION
ROAD DESIGN

U-TYPE CONCRETE ENDWALLS
BAFFLES AND GRATE OPTIONAL
375 TO 750 PIPE

	Names	Dates
Designed By		
Drawn By	dds	09/85
Checked By		
F.H.W.A. Approved:		03/20/75

Approved By S. A. McLemore
State Drainage Engineer

Revision No.	Sheet No.	Index No.
94	1 of 3	261

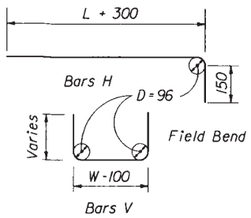

BENDING DIAGRAM

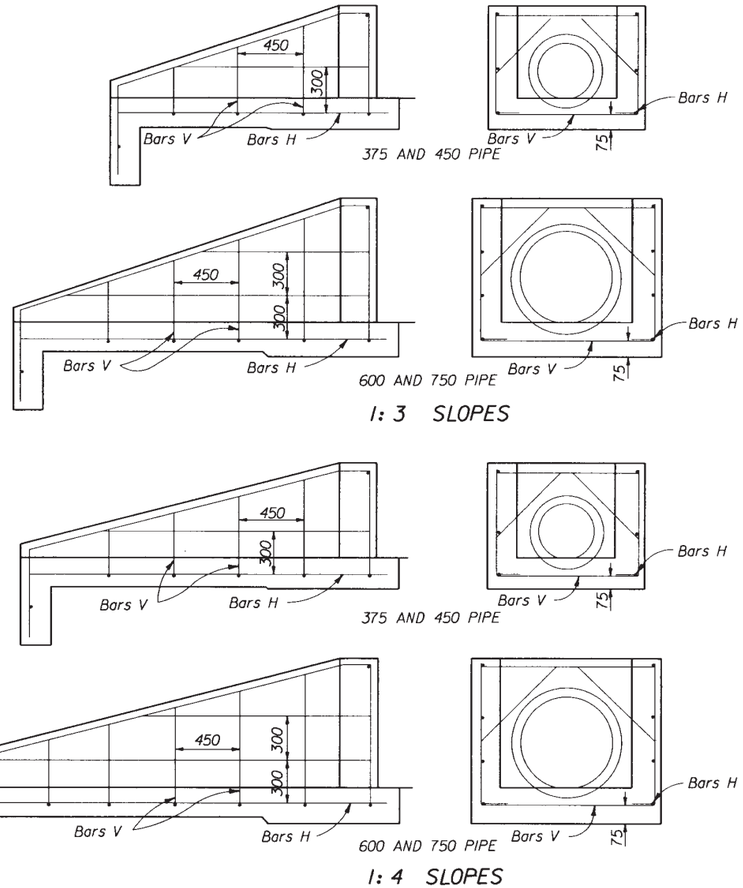

1: 3 SLOPES

1: 4 SLOPES

1: 6 SLOPES

SIDE VIEWS AND BACKWALL SECTIONS
REINFORCING DETAILS

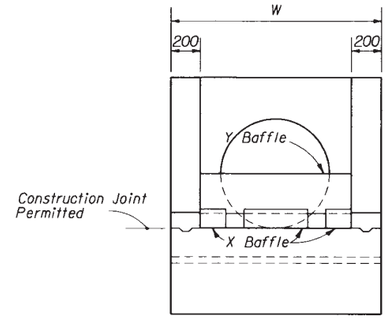

END VIEW

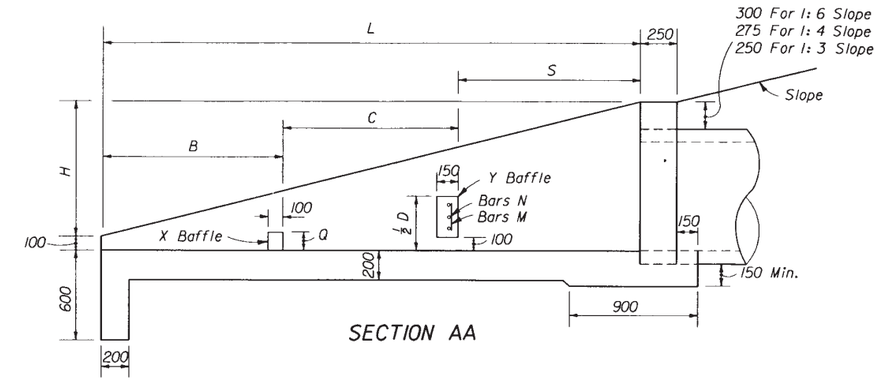

SECTION AA

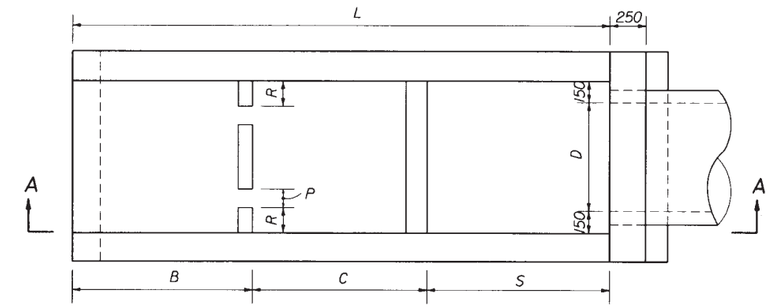

PLAN

DIMENSIONAL DETAILS

DIMENSIONS AND QUANTITIES FOR ONE U-ENDWALL										
Rate Of Slope	Pipe Size					Baffle Locations (When Required)			Concrete Class I	Reinf. Steel
	D	Area m²	L	H	W	S	B	C	m³	kg
1: 3	375	0.11	1746	582	1075	582	582	582	0.91	36
	450	0.16	1992	664	1150	664	664	664	1.08	39
	600	0.29	2478	826	1300	826	826	826	1.47	55
	750	0.46	2967	989	1450	989	989	989	1.93	68
1: 4	375	0.11	2428	607	1075	809	810	809	1.17	46
	450	0.16	2756	689	1150	919	918	919	1.40	50
	600	0.29	3404	851	1300	1135	1134	1135	1.92	64
	750	0.46	4056	1014	1450	1352	1352	1352	2.54	88
1: 6	375	0.11	3792	632	1075	1264	1264	1264	1.66	63
	450	0.16	4284	714	1150	1428	1428	1428	2.00	72
	600	0.29	5256	876	1300	1752	1752	1752	2.73	100
	750	0.46	6234	1039	1450	2078	2078	2078	3.66	127

DIMENSIONS AND QUANTITIES FOR BAFFLES							
Pipe Size D	X Baffle			Y Baffle Reinf. Steel		Concrete Class I	Reinf. Steel
	P Width	Q Height	R Length	Bar M	Bar N	m³	kg
375	100	100	100	2-15M	1-15M	0.014	2.8
450	100	100	125	3-15M	2-15M	0.02	5.7
600	125	125	150	4-15M	3-15M	0.035	8.5
750	125	125	175	4-15M	4-15M	0.066	11.4

ENDWALLS WITH AND WITHOUT BAFFLES FOR 1:3, 1:4 AND 1:6 SLOPES

STATE OF FLORIDA DEPARTMENT OF TRANSPORTATION
ROAD DESIGN

U-TYPE CONCRETE ENDWALLS
BAFFLES AND GRATE OPTIONAL
375 TO 750 PIPE

	Names	Dates
Designed By		
Drawn By	dds	9/85
Checked By		

Approved By S. A. McLemore
State Drainage Engineer

Revision No.	Sheet No.	Index No.
94	2 of 3	261

F.H.W.A. Approved:

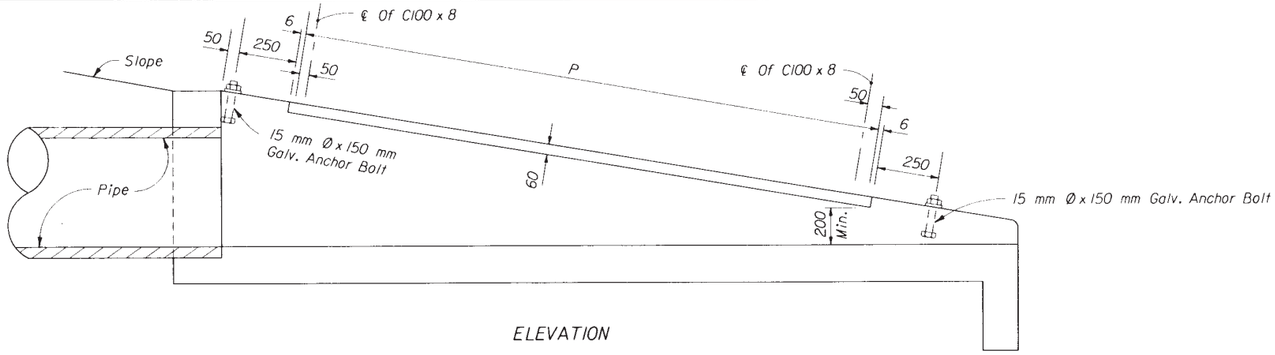

ELEVATION

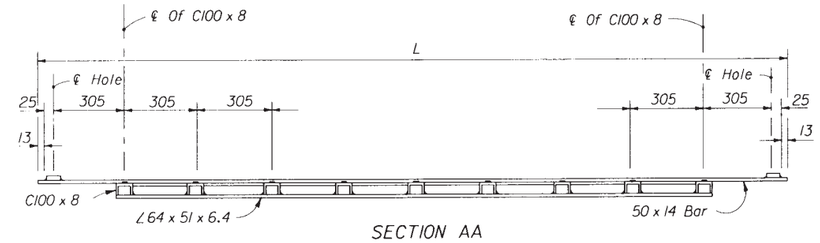

SECTION AA

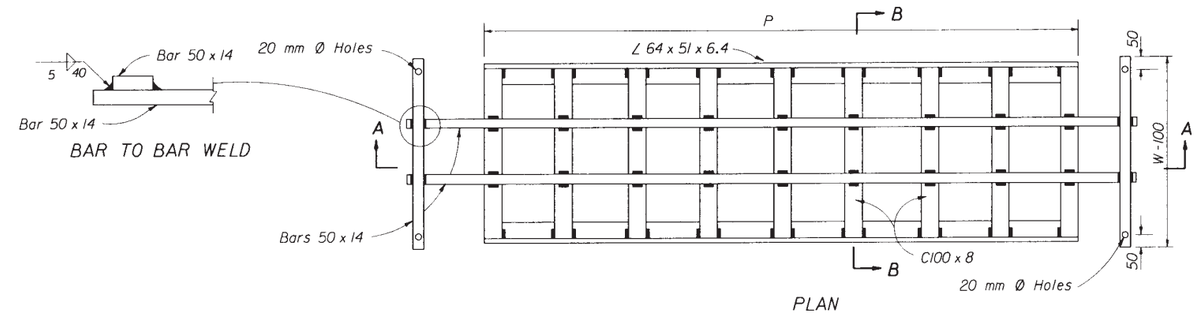

PLAN

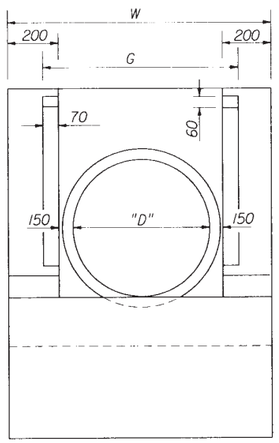

END VIEW

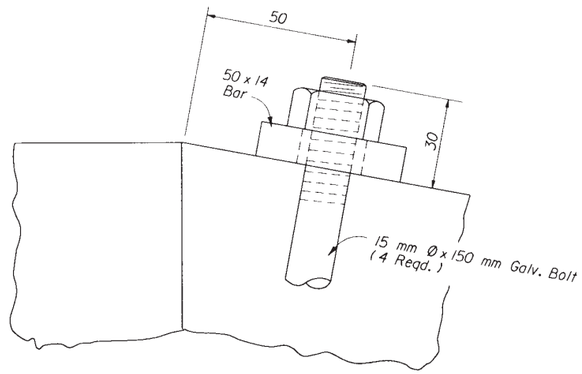

ANCHOR BOLT DETAIL

MOUNTING FOR STEEL GRATE

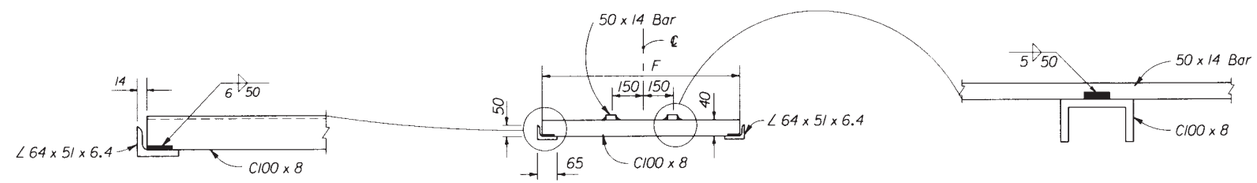

STEEL GRATE

STEEL GRATING USE CRITERIA

1. Grates to be used on pipe culvert endwalls located within the designated clear zone. Positive debris control shall be provided at all upgradient openings. Grates shall not be used unless one or more of the following conditions exist :

   A. Drainage area to culvert consists of median or infield areas or areas where debris and/or drift is negligible.

   B. Runoff to culvert is by sheet flow or in such ill defined channels that debris transport is not considered a major problem.

   C. Runoff to culvert is minor except on an infrequent basis (10 to 15 year frequency); for example a drainage basin in flat sandy terrain with normally low ground water table.

   D. Areas where culvert blockage with resultant backwater would not seriously affect roadway embankment, traffic operation or upland property.

2. Steel grating to be used only where called for in plans.

TABLE OF DIMENSIONS AND QUANTITIES FOR ONE GRATE

Rate Of Slope	Size Pipe " D "	G	2 Each Bars @ 5.5 kg/m			(X) Channels @ 8.0 kg/m			2 Angles @ 5.4 kg/m		Total Weight kg
			L	W-100	kg	(X)	F	kg	P	kg	
1:6	375	815	2821	975	42	8	775	50	2235	25	117
	450	890	3126	1050	46	9	850	62	2540	28	136
	600	1040	4041	1200	58	12	1000	96	3455	38	192
	750	1190	4956	1350	70	15	1150	138	4370	48	256
1:4	375	815	1906	975	36	5	775	31	1320	15	78
	450	890	2211	1050	36	6	850	41	1625	18	95
	600	1040	2821	1200	45	8	1000	64	2235	25	134
	750	1190	3431	1350	53	10	1150	92	2845	31	176
1:3	375	815	1296	975	25	3	775	19	710	8	52
	450	890	1601	1050	30	4	850	28	1015	11	69
	600	1040	1906	1200	35	5	1000	40	1320	15	90
	750	1190	2516	1350	43	7	1150	65	1930	21	129

STATE OF FLORIDA DEPARTMENT OF TRANSPORTATION
ROAD DESIGN

U-TYPE CONCRETE ENDWALLS BAFFLES AND GRATE OPTIONAL

375 TO 750 PIPE

	Names	Dates	Approved By
Designed By			S A McLemore, State Drainage Engineer
Drawn By	CDP	07/71	
Checked By			
F.H.W.A. Approved:		03/20/75	

Revision No.	Sheet No.	Index No.
94	3 of 3	261

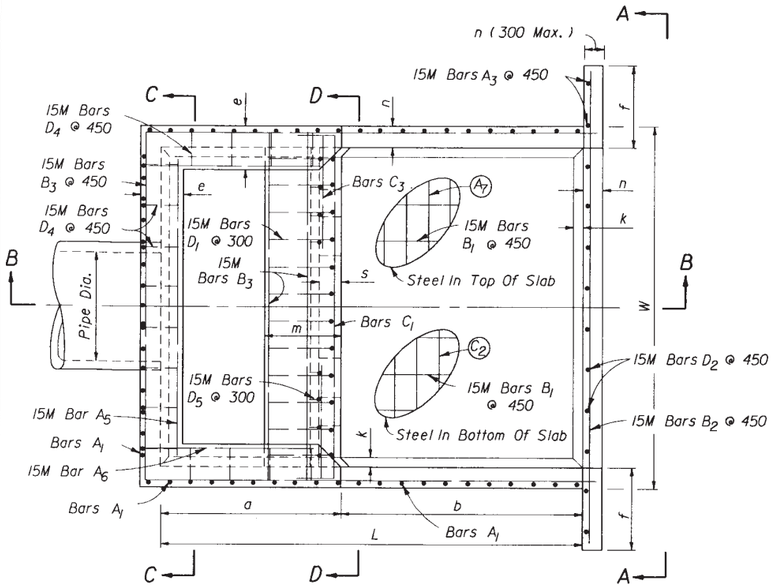

PLAN

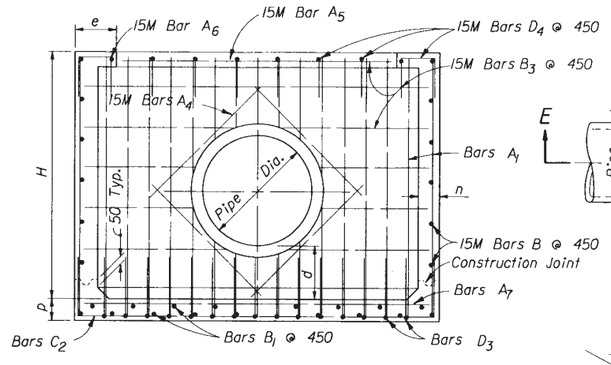

SECTION CC

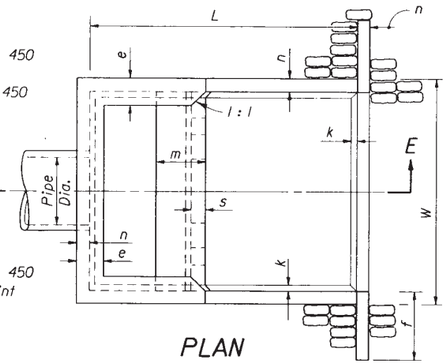

PLAN

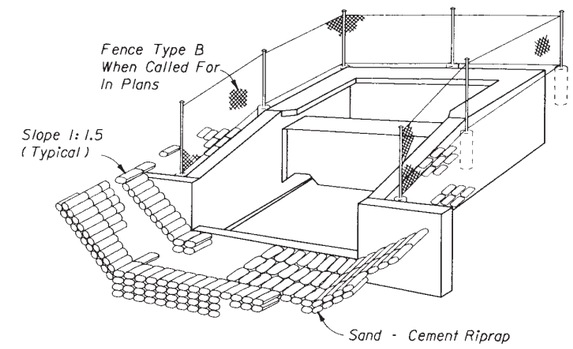

PERSPECTIVE

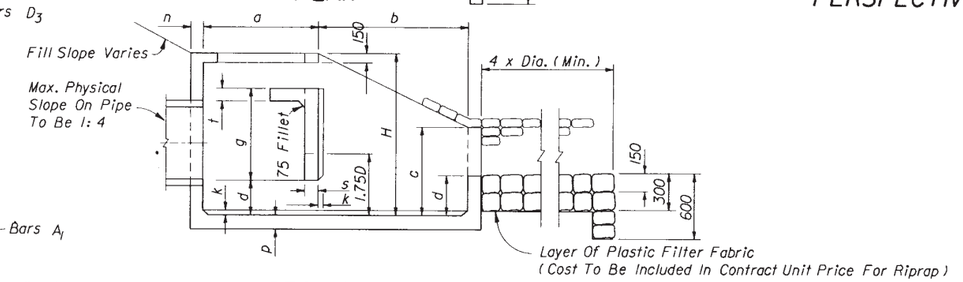

SECTION EE

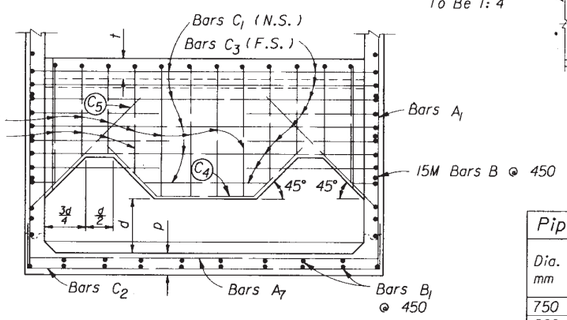

Note: Bars C_4 & C_5 (N.S. & F.S.) equivalent in size to C_3 (cut and bend as required)

SECTION DD

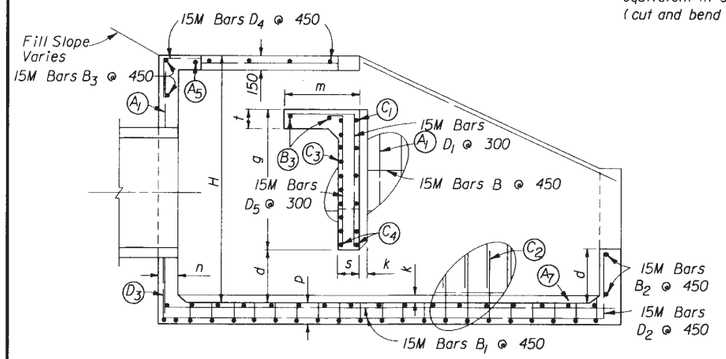

SECTION BB

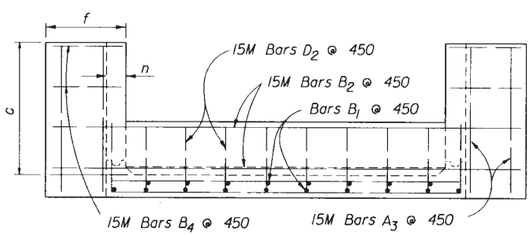

VIEW AA

Pipe Size		Q (Max.)	Dimensions																Concrete Class I	Reinf. Steel	Sand Cement Riprap
			Millimeters																		
Dia. mm	Area m²	(m³/m)	W	H	L	a	b	c	d	e	f	g	m	n	p	s	t	k	m³	kg	m³ (Nom.)
750	0.46	100	2745	1905	3250	1395	1855	1015	405	355	760	915	585	150	190	180	180	75	5.14	400	8.1
900	0.66	145	3175	2210	3760	1600	2160	1070	485	380	915	1065	685	175	190	205	205	75	7.91	580	10.4
1050	0.89	195	3605	2440	4265	1830	2435	1345	535	455	915	1195	760	200	215	230	205	100	11.33	780	13.4
1200	1.17	257	4040	2745	4775	2055	2720	1500	610	485	915	1345	865	225	240	255	205	100	15.57	1090	16.9
1350	1.48	325	4470	2970	5285	2235	3050	1650	660	560	915	1500	915	250	265	255	205	100	20.79	1450	20.8
1500	1.82	401	4900	3275	5790	2440	3350	1805	735	585	915	1625	1015	275	290	280	205	150	26.37	1930	24.9
1650	2.20	484	5260	3505	6250	2640	3610	1955	785	635	915	1750	1090	300	315	305	205	150	32.74	2430	29.3
1800	2.63	576	5640	3735	6705	2820	3885	2110	840	685	915	1880	1145	300	315	305	205	150	38.75	2950	34.0

GENERAL NOTES

1. Chamfer all exposed edges 20 mm.
2. Concrete meeting the requirements of ASTM C-478 (27 579 kPa) may be used in lieu of Class I Concrete in precast items manufactured in plants which are under the Standard Operating Procedures for the inspection of precast drainage products.
3. Reinforcing steel shall have 50 mm min. cover.
4. Endwall to be paid for under the contract unit price for Conc. Class I (Endwalls), M3 and Reinf. Steel (Roadway), KG. Riprap to be paid for under the contract unit price for Riprap (Sand-Cement), M3. Cost of plastic filter fabric to be included in the contract unit price for riprap.
5. Fencing, when called for in the plans, to be paid for under the contract unit price for Fencing, Type B, MI. Corner posts and end posts to be paid for under the contract unit price for Corner Post Assembly (Type B Fence), EA. and End Post Assembly (Type B Fence), EA. respectively. See Index No. 452 for details of Type B fencing.

BARS												
	A_1		A_7		C_1		C_2		C_3		D_3	
Pipe Size	Size (No.)	Spacing (mm)	Size (No.)	Spacing (mm)	Size (No.)	Spacing (mm)	Size (No.)	Spacing (mm)	Size (No.)	Spacing (mm)	Size (No.)	Spacing (mm)
750	15M	360	15M	685	15M	270	15M	360	15M	135	15M	360
900	15M	295	15M	685	15M	245	15M	295	15M	125	15M	295
1050	15M	270	15M	685	20M	335	15M	270	20M	170	15M	270
1200	15M	235	15M	455	20M	310	15M	235	20M	155	15M	235
1350	15M	210	15M	380	25M	410	15M	210	25M	205	15M	210
1500	20M	260	15M	320	25M	380	20M	260	25M	190	20M	260
1650	20M	220	15M	280	25M	350	20M	220	25M	175	20M	220
1800	20M	195	15M	245	25M	315	20M	195	25M	160	20M	195

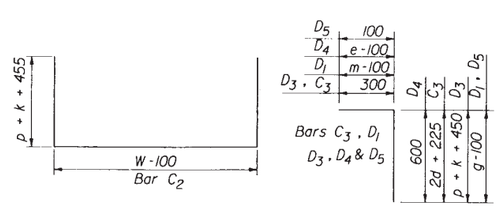

Note : All bar dimensions are out to out.

BENDING DIAGRAM

STATE OF FLORIDA DEPARTMENT OF TRANSPORTATION
ROAD DESIGN

U-TYPE CONCRETE ENDWALL ENERGY DISSIPATOR
750 TO 1800 PIPE

	Names	Dates
Designed By	HAB	10/69
Drawn By	RWR	02/84
Checked By	JVG	02/84
F.H.W.A. Approved:		03/20/75

Approved By S. A. McLemore
State Drainage Engineer

Revision No.	Sheet No.	Index No.
94	1 of 1	264

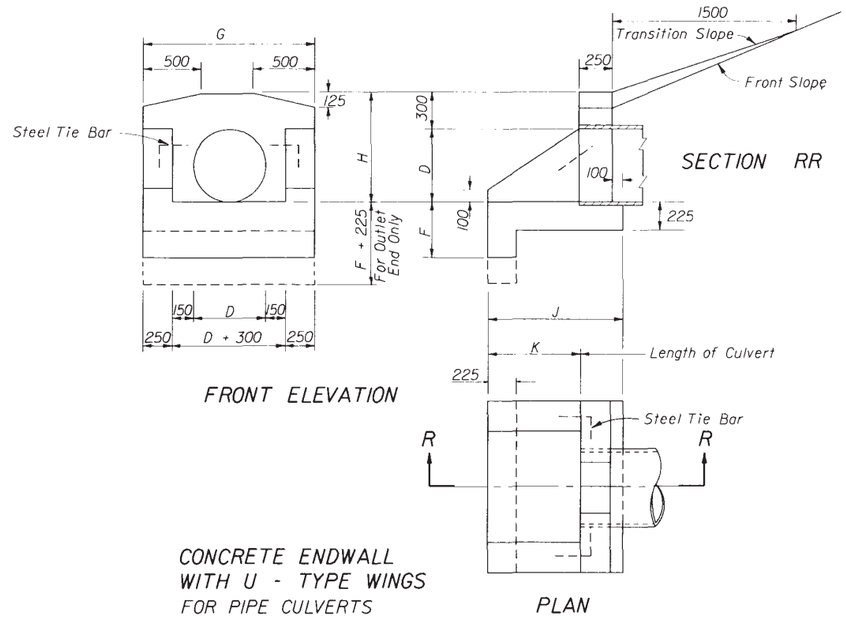

CONCRETE ENDWALL
WITH U - TYPE WINGS
FOR PIPE CULVERTS

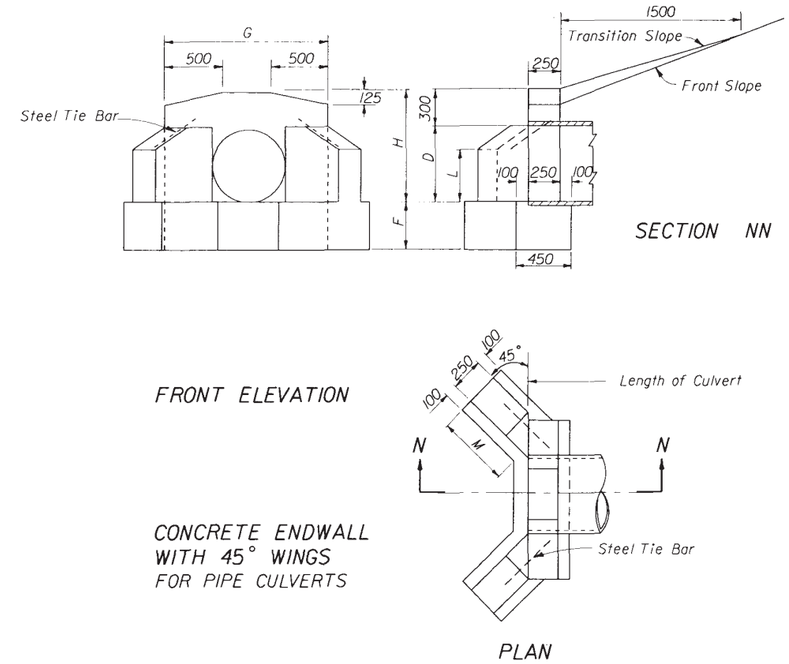

CONCRETE ENDWALL
WITH 45° WINGS
FOR PIPE CULVERTS

TABLE OF DIMENSIONS AND ESTIMATED QUANTITIES
PIPE CULVERT ENDWALLS WITH U - TYPE WINGS

DIMENSIONS							QUANTITIES IN ONE ENDWALL						
Opening		Wall			Footing		Total m³ Concrete, Class I						Steel Tie Bars
							Conc. Pipe		C.M. Pipe		C.I. Pipe		
D	Area m²	G	H	K	F	J	Inlet	Outlet	Inlet	Outlet	Inlet	Outlet	
300	0.07	1100	600	305	380	655	0.37	0.42	0.37	0.44	0.37	0.44	none
375	0.11	1175	975	430	380	780	0.45	0.51	0.47	0.54	0.47	0.54	none
450	0.16	1250	750	535	380	885	0.54	0.60	0.57	0.63	0.57	0.63	none
600	0.28	1400	900	760	455	1110	0.77	0.85	0.81	0.89	0.81	0.89	2 - 20M x 610
750	0.44	1550	1050	990	455	1344	1.02	1.10	1.08	1.15	1.07	1.15	2 - 20M x 610
900	0.64	1700	1200	1220	535	1570	1.32	1.41	1.41	1.50	1.39	1.48	2 - 20M x 760
1050	0.87	1850	1350	1450	610	1800	1.67	1.77	1.77	1.87			2 - 20M x 760
1200	1.13	2000	1500	1675	610	2025	2.02	2.13	2.15	2.26			2 - 20M x 915

TABLE OF DIMENSIONS AND ESTIMATED QUANTITIES
PIPE CULVERT ENDWALLS WITH 45° WINGS

DIMENSIONS							QUANTITIES IN ONE ENDWALL			
Opening		Wall				Footing	Concrete, Class I Total m³			Steel Tie Bars
							Conc. Pipe	C.M. Pipe	C.I. Pipe	
D	Area m²	H	G	L	M	F				
375	0.07	675	1090	305	380	380	0.43	0.45	0.45	none
450	0.16	750	1170	355	485	380	0.57	0.59	0.59	none
600	0.28	900	1320	430	635	405	0.77	0.81	0.81	2 - 20M x 610
750	0.44	1050	1475	535	735	455	1.01	1.07	1.06	2 - 20M x 610
900	0.64	1200	1625	610	890	510	1.32	1.40	1.39	2 - 20M x 915
1050	0.87	1350	1780	685	1065	610	1.79	1.89		2 - 20M x 915
1200	1.13	1500	1930	760	1220	610	2.09	2.22		2 - 20M x 915

GENERAL NOTES

1. Chamfer all exposed edges 20 mm.
2. Concrete meeting the requirements of ASTM C-478 (27 579 kPa) may be used in lieu of Class I concrete in precast units manufactured in plants which are under the Standard Operating Procedures for the inspection of precast drainage products.
3. Endwall to be paid for under the contract unit price for Conc. Class I (Endwalls), M3. Cost of steel tie bars to be included in the contract unit price for Class I Concrete.
4. Sodding to be in accordance with Index No. 281, and paid for under the contract unit price for Sodding, M2.

STATE OF FLORIDA DEPARTMENT OF TRANSPORTATION
ROAD DESIGN

WINGED CONCRETE ENDWALLS SINGLE ROUND PIPE

	Names	Dates
Designed By		
Drawn By	TJK	12/31
Checked By	GEF	03/32
F.H.W.A. Approved:		03/20/75

Approved By
State Drainage Engineer

Revision No.	Sheet No.	Index No.
94	1 of 1	266

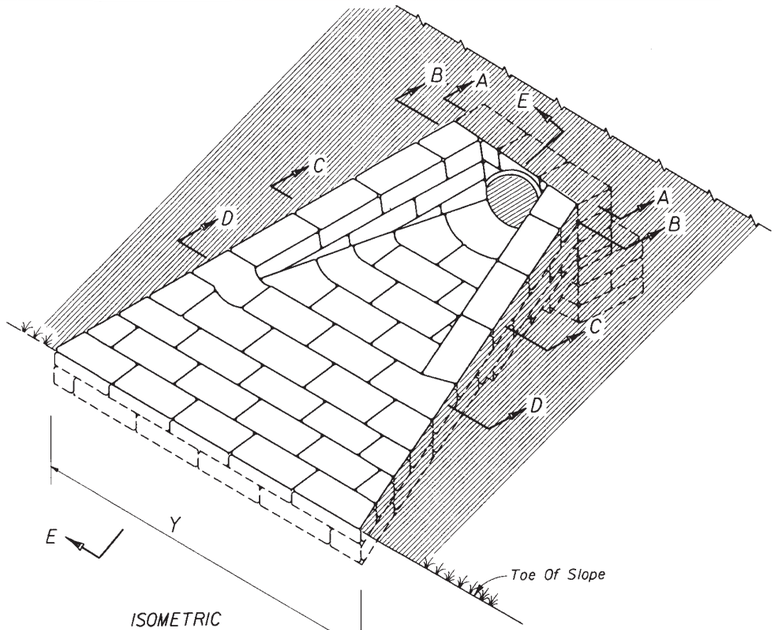

ISOMETRIC

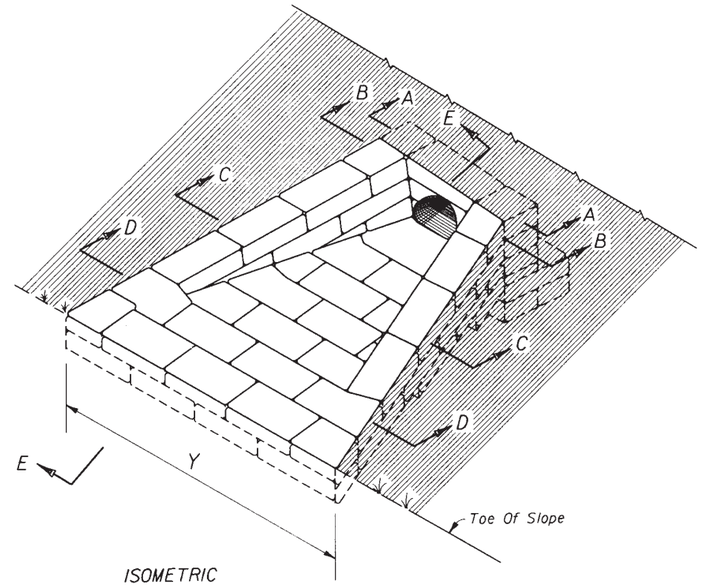

ISOMETRIC

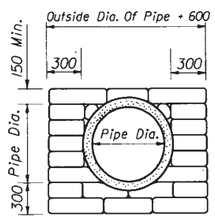

SECTION AA

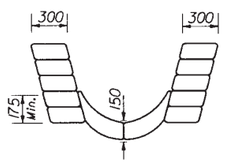

SECTION BB

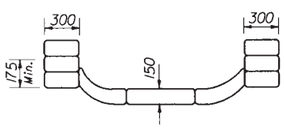

SECTION CC

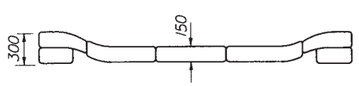

SECTION DD

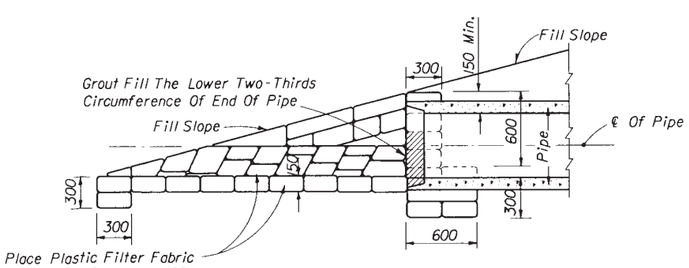

SECTION EE

DETAIL FOR SINGLE PIPE CULVERT

Note: For multiple pipe culverts, spacing between pipe centers = X

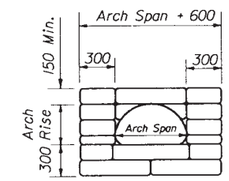

SECTION AA

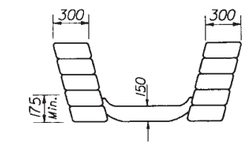

SECTION BB

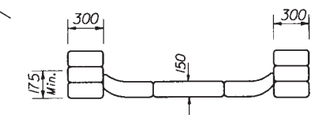

SECTION CC

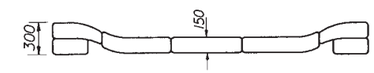

SECTION DD

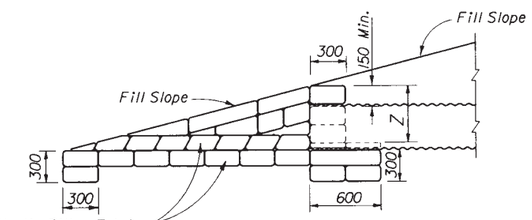

SECTION EE

DETAILS FOR SINGLE METAL PIPE ARCH CULVERTS

NOTE: For multiple metal pipe arch culverts, spacing between arch centers = X

DIMENSIONS AND QUANTITIES FOR METAL PIPE ARCH CULVERTS

Span	Rise	Dimensions						Quantity of Sand-Cement Riprap in m³ for One Endwall											
		X	Y				Z	For 1:2 Slopes				For 1:4 Slopes				For 1:6 Slopes			
			1-Arch	2-Arch	3-Arch	4-Arch		1-Arch	2-Arch	3-Arch	4-Arch	1-Arch	2-Arch	3-Arch	4-Arch	1-Arch	2-Arch	3-Arch	4-Arch
410	310	760	1980	2740	3500	4260	485	0.8	1.1	1.5	1.9	1.1	1.7	2.2	2.8				
510	360	865	2285	3150	4015	4880	535	0.9	1.4	1.8	2.3	1.5	2.1	2.7	3.3				
690	480	1040	2820	3860	4900	5940	610	1.3	1.9	2.5	3.1	2.0	2.8	3.7	4.5				
860	580	1220	3355	4575	5795	7015	610	1.7	2.4	3.1	3.7	2.6	3.6	4.6	5.6				
1040	710	1450	3885	5335	6785	8235	610	2.2	3.1	4.1	5.0	3.4	4.7	5.9	7.1				
1220	810	1675	4420	6095	7770	9445	610	2.7	3.7	4.8	5.9	4.2	5.7	7.1	8.6				
1420	940	1930	5030	6960	8890	10820	610	3.3	4.7	6.0	7.3	5.3	7.0	8.8	10.6				
1600	1060	2160	5565	7725	9885	12045	610	3.9	5.4	6.8	8.3	6.2	8.2	10.2	12.2				
1770	1160	2390	6095	8485	10875	13265	610	4.5	6.2	7.9	9.6	7.3	9.5	11.7	13.9				

DIMENSIONS AND QUANTITIES FOR ROUND PIPE CULVERTS

Pipe Dia.	Dimensions					Quantity of Sand-Cement Riprap in m³ for One Endwall											
	X	Y				For 1:2 Slopes				For 1:4 Slopes				For 1:6 Slopes			
		1-Pipe	2-Pipes	3-Pipes	4-Pipes	1-Pipe	2-Pipes	3-Pipes	4-Pipes	1-Pipe	2-Pipes	3-Pipes	4-Pipes	1-Pipe	2-Pipes	3-Pipes	4-Pipes
375	785	2135	2920	3705	4490	0.9	1.2	1.6	2.0	1.3	1.8	2.3	2.8				
450	865	2440	3305	4170	5035	1.1	1.5	2.0	2.4	1.6	2.2	2.8	3.4				
600	1040	3050	4090	5130	6170	1.5	2.1	2.7	3.3	2.2	3.1	3.9	4.8				
750	1295	3660	4955	6250	7545	1.9	2.8	3.7	4.5	2.9	4.1	5.4	6.6				
900	1550	4265	5815	7365	8915	2.4	3.5	4.7	5.9	3.7	5.4	7.0	8.7				
1050	1830	4875	6705	8535	10365	2.9	4.4	5.9	7.4	4.6	6.7	8.9	11.1				
1200	2055	5485	7540	9595	11650	3.4	5.4	7.2	9.0	5.5	8.3	10.9	13.7				
1350	2335	6095	8430	10765	13100	4.1	6.3	8.6	10.9	6.5	9.9	13.2	16.6				
1500	2590	6705	9295	11885	14475	4.7	7.4	10.2	12.9	7.6	11.7	15.7	19.8				

STATE OF FLORIDA DEPARTMENT OF TRANSPORTATION
ROAD DESIGN

U-TYPE SAND-CEMENT ENDWALLS

	Names	Dates
Designed By	JEP	12/48
Drawn By	HW	03/54
Checked By	CDD	03/54
F.H.W.A. Approved:		08/30/77

Approved By S. A. McGeorge
State Drainage Engineer

Revision No.	Sheet No.	Index No.
94	1 of 1	268

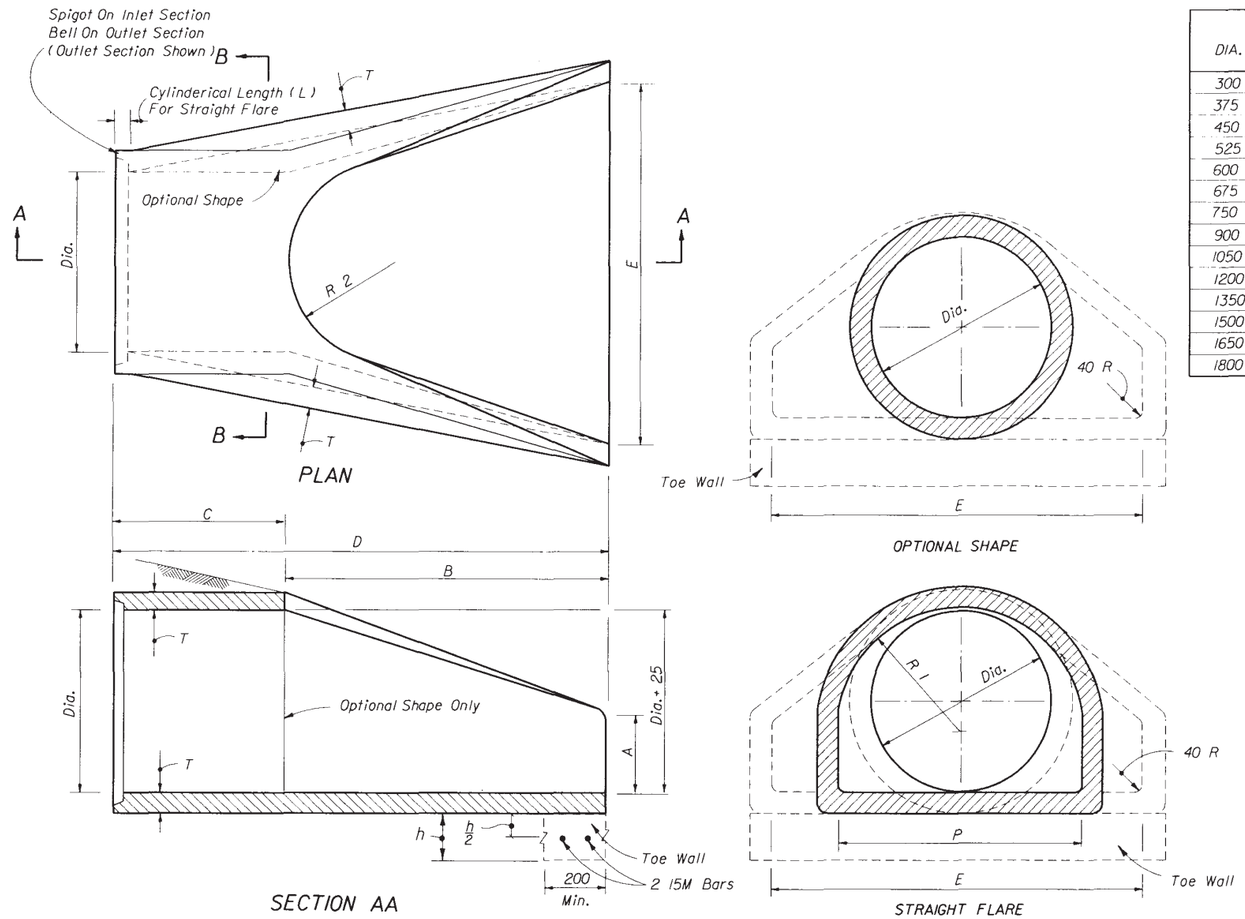

FLARED END SECTION

DIA.	T	REINF. mm²/m	BELL Or SPIGOT	A	B	C	D	E	P	R 1	R 2	L	WEIGHT (kg)	h	TOE WALL CLASS I CONC (Misc.) M³
300	50	148	40	100	610	1240	1850	610	505	255	230	90	240	305	.05
375	55	148	50	150	685	1170	1855	760	615	315	280	90	335	305	.05
450	65	148	65	230	685	1170	1855	915	735	395	305	100	450	380	.08
525	70	148	55	230	890	965	1855	1065	805	410	330	100	580	380	.09
600	75	148	65	240	1105	760	1865	1220	845	425	355	115	690	455	.13
675	80	313	65	265	1220	645	1865	1370	915	470	370	115	875	455	.15
750	90	313	75	305	1370	500	1870	1525	940	470	380	125	993	535	.18
900	100	313	90	380	1600	880	2480	1830	1215	620	510	140	1860	535	.22
1050	115	313	95	535	1600	890	2490	1980	1370	700	560	140	2440	610	.28
1200	125	313	110	610	1830	660	2490	2135	1435	725	560	140	2970	610	.30
1350	140	368	120	685	1650	890	2540	2285	1665	840	610	160	3645	610	.32
1500	150	368	125	760	1525	990	2515	2440	1840	930	610	170	3970	610	.34
1650	165	368	140	610	1980	535	2515	2590	1830	915	610	185	4820	610	.36
1800	180	368	150	610	1980	535	2515	2745	1975	990	610	195	5680	610	.38

GENERAL NOTES

1. Flared end sections shall conform to the requirements of ASTM C-76 with the exception that dimensions and reinforcement shall be as prescribed in the table above. Circumferential reinforcement may consist of either one cage or two cages of steel. Compressive strength of concrete shall be 27 579 kPa. Shop drawings for flared end sections having dimensions other than above must be submitted for approval to the State Drainage Engineer.

2. Connections between the flared end section and the pipe culvert may be any of the following types unless otherwise shown on the plans.
   a. Joints meeting the requirements of Section 941-1.5 of the Standard Specifications (O-Ring Gasket).
      Flared end section joint dimensions and tolerances shall be identical or compatible to those used in the pipe culvert joint. When pipe culvert and flared end section manufacturers are different, the compatibility of joint designs shall be certified to by the manufacturer of the flared end sections.
   b. Joints sealed with preformed plastic gaskets.
      The gaskets shall meet the requirements of Section 942-2 of the Standard Specifications and the minimum sizes for gaskets shall be as that specified for equivalent sizes of elliptical pipe.
   c. Reinforced concrete jackets, as detailed on this drawing.
      Cost of the reinforced concrete jacket to be included in the contract unit price for the flared end section.
      When non-coated corrugated metal pipe is called for in the plans, the pipe shall be bituminous coated in the jacketed area as specified on Index No. 280. Bituminous coating to be included in the contract unit price for the pipe culvert. Concrete jacket shall be as specified on Index No. 280. Cost of concrete and reinforcement shall be included in the contract unit price for the pipe culvert.

3. Toe walls shall be constructed when shown on the plans or at locations designated by the Engineer. Toe walls are to be cast-in-place with Class I Concrete and paid for under the contract unit price for Conc. Class I (Miscellaneous), M3. Reinforcing steel to be included in cost of toe wall.

4. On skewed pipe culverts the flared end sections shall be placed in line with the pipe culvert. Side slopes shall be warped as required to fit the flared end sections.

5. Flared End Section to be paid for under the contract unit price for Flared End Section (Concrete), EA. Sodding shall be in accordance with Index No. 281, and paid for under the contract unit price for Sodding, M2.

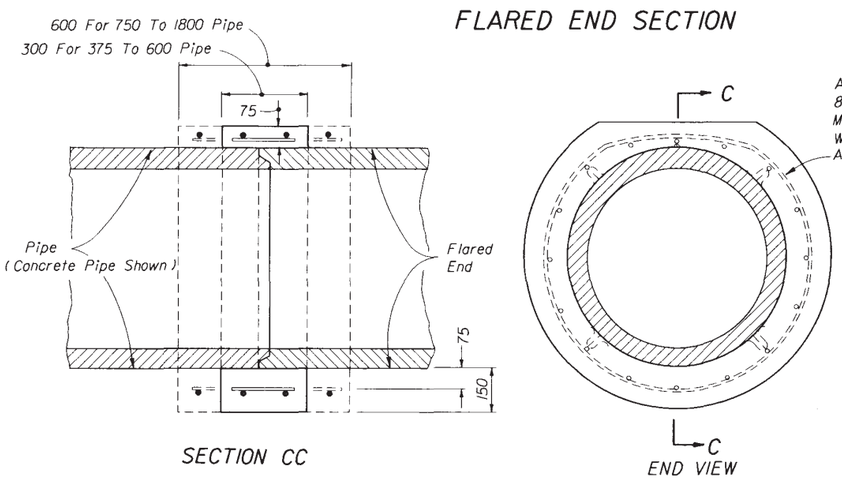

Any Wire Mesh Arrangement Which Provides 81 Square millimeters Of Steel Area Per Linear Meter Both Ways May Be Used; Provided The Wires Are Spaced A Minimum Of 50 mm And/Or A Maximum Of 150 mm On Centers.

REINFORCED CONCRETE JACKET DETAIL

DESIGN NOTES

1. Flared end sections are intended for use outside the clear zone on median drain and cross drain installation, except that flared end sections for pipe sizes 300 mm and 375 mm are permitted within the clear zone. When the slope intersection permits, these flared end sections may be located with the culvert opening as close as 2.4 m beyond the outside edge of the shoulder.

   Flared end sections are not intended for side drain installations.

2. Reinforced concrete jackets shall be used at all locations where high velocities and/or highly erosive soils may cause disjointing. These locations are to be shown on the plans.

3. Toe walls shall be used whenever the anticipated velocity of discharge and soil type are such that erosive action would occur. Toe walls are not required where ditch pavement is provided, except when disjointing would occur if the ditch pavement should fail.

STATE OF FLORIDA DEPARTMENT OF TRANSPORTATION
ROAD DESIGN

FLARED END SECTION

	Names	Dates
Designed By	EGR	09/77
Drawn By	HKH	09/77
Checked By	JVG	09/77
F.H.W.A. Approved:		09/23/77

Approved By S. A. McLemore
State Drainage Engineer

Revision No.	Sheet No.	Index No.
94	1 of 1	270

DIMENSIONS AND QUANTITIES

	D	X	A	B	C	E	F	G	M Single Pipe	M Double Pipe	M Triple Pipe	M Quad. Pipe	N	135 CONCRETE SLAB (m^3) ◪ Single Pipe	135 CONCRETE SLAB (m^3) ◪ Double Pipe	135 CONCRETE SLAB (m^3) ◪ Triple Pipe	135 CONCRETE SLAB (m^3) ◪ Quad. Pipe	SODDING (m^3) Single Pipe	SODDING (m^3) Double Pipe	SODDING (m^3) Triple Pipe	SODDING (m^3) Quad. Pipe
1: 2 Slope	375	0.79	0.59	0.66	1.25	0.63	1.52	0.37	1.41	2.20	2.98	3.77	0.37	0.29	0.44	0.59	0.73	17.56	20.07	22.58	25.08
	450	0.86	0.60	0.84	1.44	0.78	1.83	0.43	1.50	2.36	3.23	4.09	0.37	0.34	0.50	0.67	0.83	18.39	20.40	23.41	25.92
	600	1.04	0.63	1.17	1.80	1.09	2.13	0.53	1.68	2.72	3.76	4.80	0.38	0.41	0.63	0.86	1.09	20.07	23.40	26.76	29.26
	750	1.30	0.66	1.51	2.16	1.39	2.44	0.61	1.85	3.15	4.44	5.74	0.40	0.50	0.83	1.15	1.46	21.74	25.92	29.26	33.45
	900	1.55	0.69	1.85	2.54	1.70	2.74	0.68	2.03	3.58	5.13	6.68	0.41	0.62	1.06	1.50	1.92	23.41	28.43	32.61	37.63
	1050	1.83	0.71	2.20	2.91	2.00	3.05	0.75	2.21	4.04	5.87	7.70	0.42	0.74	1.30	1.87	2.44	25.08	32.61	35.95	41.81
	1200	2.06	0.74	2.94	3.28	2.30	3.35	0.81	2.30	4.44	6.50	8.56	0.44	0.86	1.56	2.24	2.94	26.76	35.12	39.30	45.15
	1350	2.34	0.77	2.88	3.65	2.61	3.66	0.86	2.57	4.90	7.24	9.58	0.45	1.00	1.87	2.74	3.61	28.43	37.63	42.64	49.33
	1500	2.59	0.80	3.22	4.02	2.91	4.27	0.91	2.74	5.33	7.93	10.52	0.46	1.15	2.21	3.27	4.34	30.10	37.68	45.99	53.51
	1650	2.79	0.83	3.56	4.39	3.22	4.57	0.97	2.92	5.72	8.51	11.30	0.47	1.28	2.48	3.70	4.92	31.77	40.13	48.50	56.86
	1800	3.05	0.85	3.90	4.76	3.52	4.88	1.01	3.10	6.15	9.19	12.24	0.48	1.45	2.86	4.27	5.70	33.45	42.64	51.84	61.04
1: 4 Slope	375	0.79	0.69	1.25	1.94	1.23	2.44	0.37	1.41	2.20	2.98	3.77	0.37	0.44	0.67	0.88	1.10	19.23	21.74	24.25	26.76
	450	0.86	0.72	1.56	2.28	1.53	2.74	0.43	1.50	2.36	3.23	4.09	0.37	0.50	0.76	1.00	1.26	20.90	23.41	25.92	29.26
	600	1.04	0.77	2.18 △	2.96	2.14 △	3.35	0.53	1.68	2.72	3.76	4.80	0.38	0.65	0.99	1.34	1.68	23.41	26.76	30.10	33.45
	750	1.30	0.82	2.82	3.64	2.75	3.96	0.61	1.85	3.15	4.44	5.74	0.40	0.84	1.33	1.83	2.33	25.92	30.10	34.28	38.46
	900	1.55	0.88	3.45 ◇	4.32	3.36 ◇	4.57	0.68	2.03	3.58	5.13	6.68	0.41	1.00	1.69	2.35	3.03	28.43	33.45	38.46	43.48
	1050	1.83	0.93	4.08	5.01	3.97	5.18	0.75	2.21	4.04	5.87	7.70	0.42	1.21	2.11	2.99	3.89	31.77	36.79	42.64	48.50
	1200	2.06	0.98	4.70	5.68	4.58	5.79	0.81	2.30	4.44	6.50	8.56	0.44	1.41	2.52	3.62	4.72	34.28	40.13	46.82	52.68
	1350	2.34	1.03	5.33	6.36	5.19	6.40	0.86	2.57	4.90	7.24	9.58	0.45	1.64	3.02	4.41	5.80	36.79	43.48	51.00	57.69
	1500	2.59	1.09	5.96	7.04	5.80	7.01	0.91	2.74	5.33	7.93	10.52	0.46	1.87	3.56	5.25	6.93	39.30	46.82	55.18	62.71
	1650	2.79	1.14	6.59	7.73	6.41	7.62	0.97	2.92	5.72	8.51	11.30	0.47	2.20	4.24	6.25	8.29	40.97	49.33	57.69	66.89
	1800	3.05	1.19	7.22	8.41	7.02	8.23	1.01	3.10	6.15	9.19	12.24	0.48	2.71	5.05	7.55	10.04	43.48	52.68	61.87	71.07

◪ See General Note No. 3.
See Sheet 5 Of 6 For 75 mm Slab Quantities

B	E	
△ 1.95	△ 1.90	Dimensions permitted to allow use of 2.44 standard pipe lengths.
◇ 3.17	◇ 3.10	Dimensions permitted to allow use of 3.66 standard pipe lengths.

△◇ Concrete slab shall be deepened to form bridge across crown of pipe. See section below.

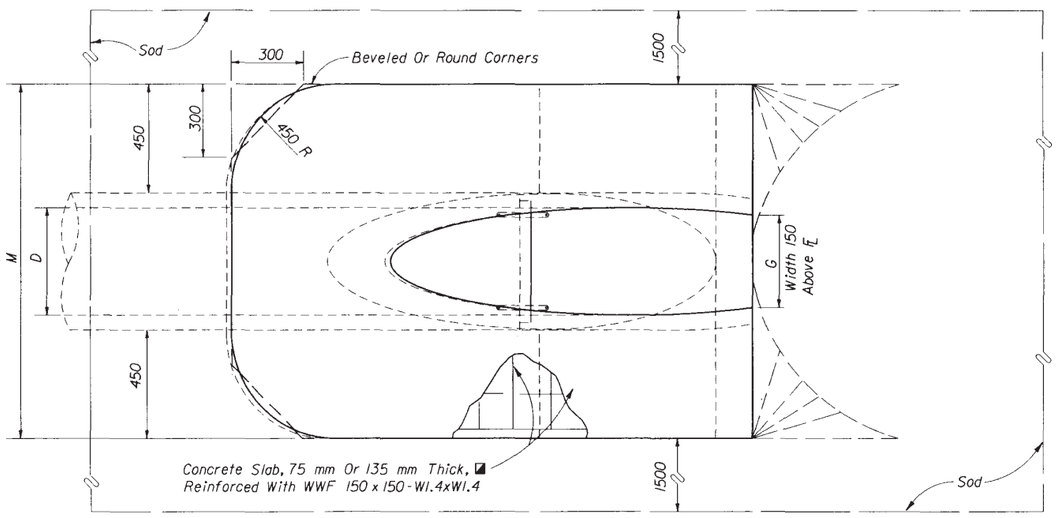

TOP VIEW-SINGLE PIPE

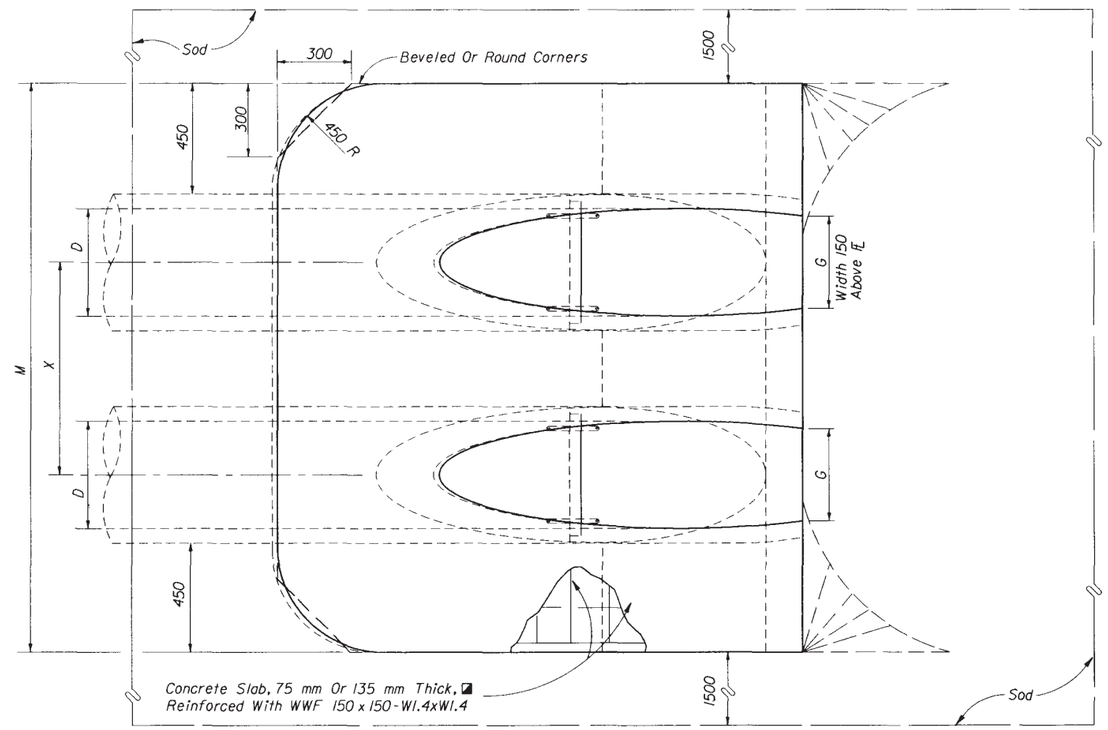

TOP VIEW-MULTIPLE PIPE

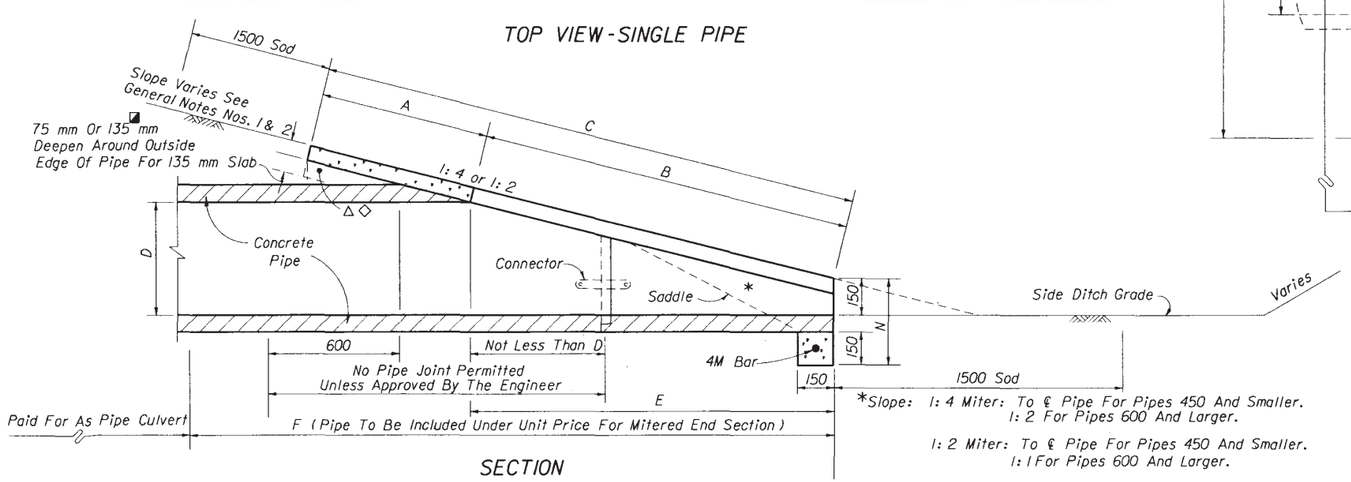

SECTION

*Slope: 1: 4 Miter: To ℄ Pipe For Pipes 450 And Smaller.
1: 2 For Pipes 600 And Larger.

1: 2 Miter: To ℄ Pipe For Pipes 450 And Smaller.
1: 1 For Pipes 600 And Larger.

NOTE: See sheet 6 for details and notes.

STATE OF FLORIDA DEPARTMENT OF TRANSPORTATION
ROAD DESIGN

CROSS DRAIN MITERED END SECTION

SINGLE AND MULTIPLE ROUND CONCRETE PIPE

	Names	Dates	Approved By
Designed By	DCB	06/78	S. A. McLemore, State Drainage Engineer
Drawn By			
Checked By	KNW	06/78	
F.H.W.A. Approved:		07/21/78	

Revision No.	Sheet No.	Index No.
94	1 of 6	272

DIMENSIONS AND QUANTITIES

	D	X	A	B	C	E	F	G	M Single Pipe	M Double Pipe	M Triple Pipe	M Quad. Pipe	N	135 CONCRETE SLAB (m^3) ◪ Single Pipe	Double Pipe	Triple Pipe	Quad. Pipe	SODDING (m^2) Single Pipe	Double Pipe	Triple Pipe	Quad. Pipe
1: 2 Slope	375	0.78	0.76	0.51	1.27	0.45	1.52	0.37	1.31	2.11	2.89	3.68	0.31	0.27	0.41	0.57	0.72	17.56	20.07	22.58	24.25
	450	0.86	0.76	0.68	1.44	0.61	1.83	0.43	1.39	2.26	3.12	3.97	0.31	0.29	0.47	0.67	0.86	18.39	20.90	23.41	25.92
	600	1.04	0.76	1.02	1.78	0.91	2.13	0.52	1.55	2.59	3.63	4.67	0.31	0.36	0.58	0.80	1.02	19.23	22.58	25.92	29.26
	750	1.29	0.76	1.36	2.12	1.22	2.44	0.61	1.70	2.99	4.29	5.59	0.31	0.44	0.73	1.05	1.35	20.90	25.08	29.26	32.61
	900	1.55	0.76	1.70	2.46	1.52	2.74	0.68	1.85	3.40	4.95	6.50	0.31	0.51	0.91	1.32	1.73	22.58	27.59	31.77	36.79
	1050	1.83	0.76	2.04	2.81	1.83	3.05	0.74	2.00	3.83	5.65	7.49	0.31	0.60	1.13	1.66	2.16	24.25	30.10	35.12	40.97
	1200	2.05	0.76	2.38	3.15	2.13	3.35	0.81	2.15	4.21	6.27	8.33	0.31	0.68	1.31	1.94	2.57	25.92	31.77	38.46	44.31
	1350	2.33	0.76	2.72	3.48	2.44	3.66	0.86	2.31	4.64	6.98	9.32	0.31	0.78	1.57	2.37	3.17	27.59	34.28	41.81	48.50
	1500	2.59	0.76	3.07	3.83	2.74	3.96	0.91	2.46	5.05	7.64	10.23	0.31	0.87	1.82	2.78	3.74	28.43	36.79	34.31	52.68
1: 4 Slope	375	0.78	0.76	0.94	1.70	0.91	2.13	0.37	1.32	2.11	2.89	3.68	0.31	0.34	0.52	0.70	0.88	18.39	20.90	23.41	25.92
	450	0.86	0.76	1.25	2.02	1.22	2.44	0.43	1.39	2.26	3.12	3.97	0.31	0.37	0.59	0.79	1.00	20.07	22.58	25.08	27.59
	600	1.04	0.76	1.88	2.64	1.83	3.05	0.52	1.55	2.59	3.63	4.67	0.31	0.50	0.83	1.06	1.35	22.58	25.08	28.43	31.77
	750	1.29	0.76	2.51	3.27	2.44	3.66	0.61	1.70	2.99	4.29	5.59	0.31	0.62	1.02	1.45	1.87	24.25	28.43	32.61	36.79
	900	1.55	0.76	3.14	3.90	3.05	4.26	0.68	1.85	3.40	4.95	6.50	0.31	0.74	1.28	1.84	2.40	26.76	31.77	36.79	40.97
	1050	1.83	0.76	3.77	4.53	3.66	4.87	0.74	2.00	3.83	5.65	7.49	0.31	0.86	1.59	2.34	3.07	29.26	35.12	40.13	45.99
	1200	2.05	0.76	4.40	5.16	4.26	5.48	0.81	2.15	4.21	6.27	8.33	0.31	0.99	1.90	2.82	3.73	31.77	38.46	44.31	50.17
	1350	2.33	0.76	5.02	5.79	4.87	6.09	0.86	2.31	4.64	6.98	9.32	0.31	1.13	2.28	3.42	4.57	34.28	40.97	48.50	55.18
	1500	2.59	0.76	5.65	6.41	5.48	6.70	0.91	2.46	5.05	7.64	10.23	0.31	1.27	2.67	4.06	5.45	36.76	44.31	52.68	60.20

◪ See General Note No. 3.
See Sheet 5 Of 6 For 75 mm Slab Quantities

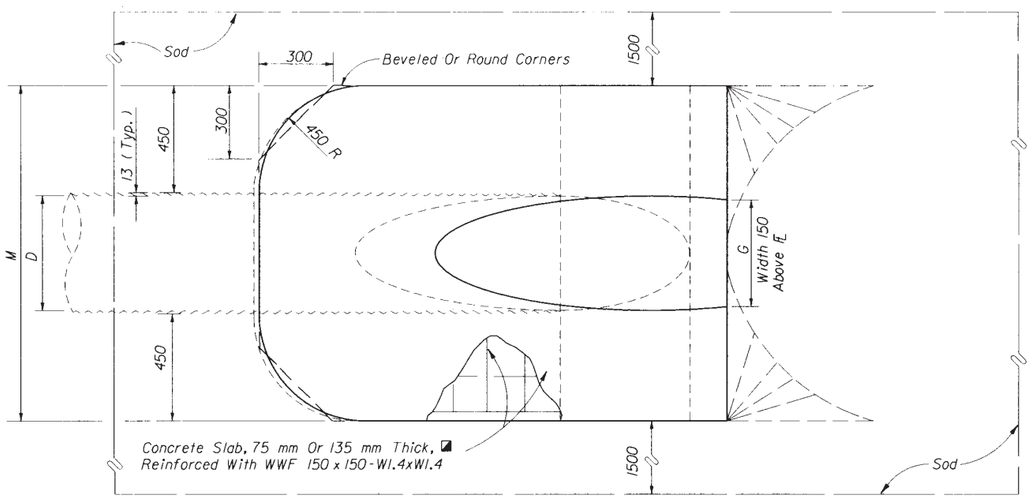

TOP VIEW-SINGLE PIPE

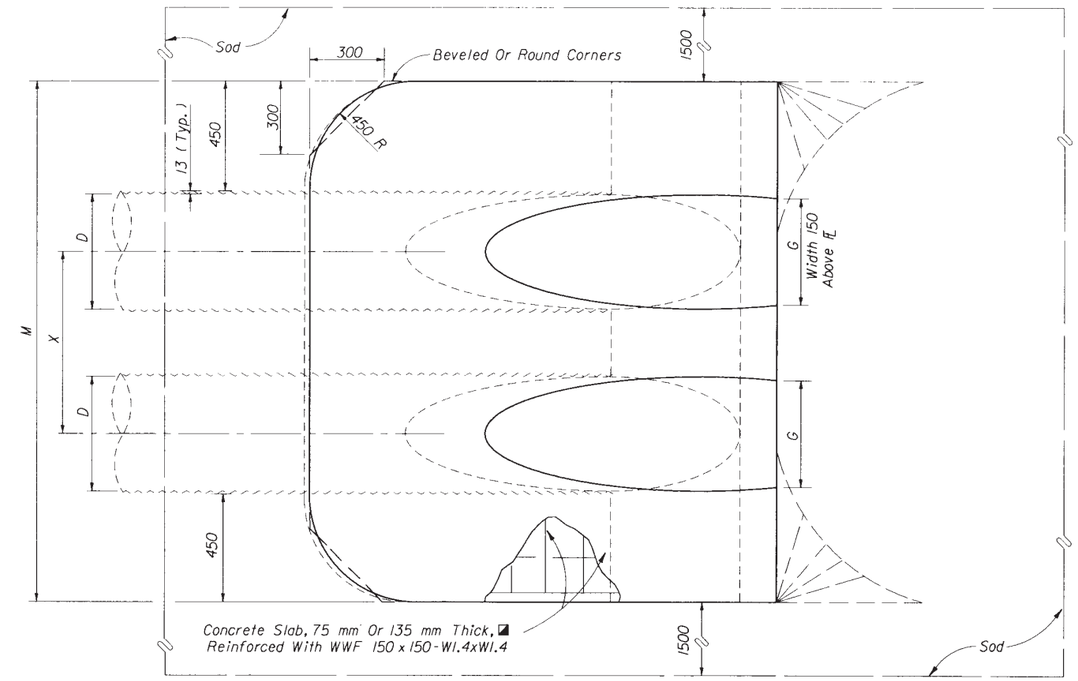

TOP VIEW-MULTIPLE PIPE

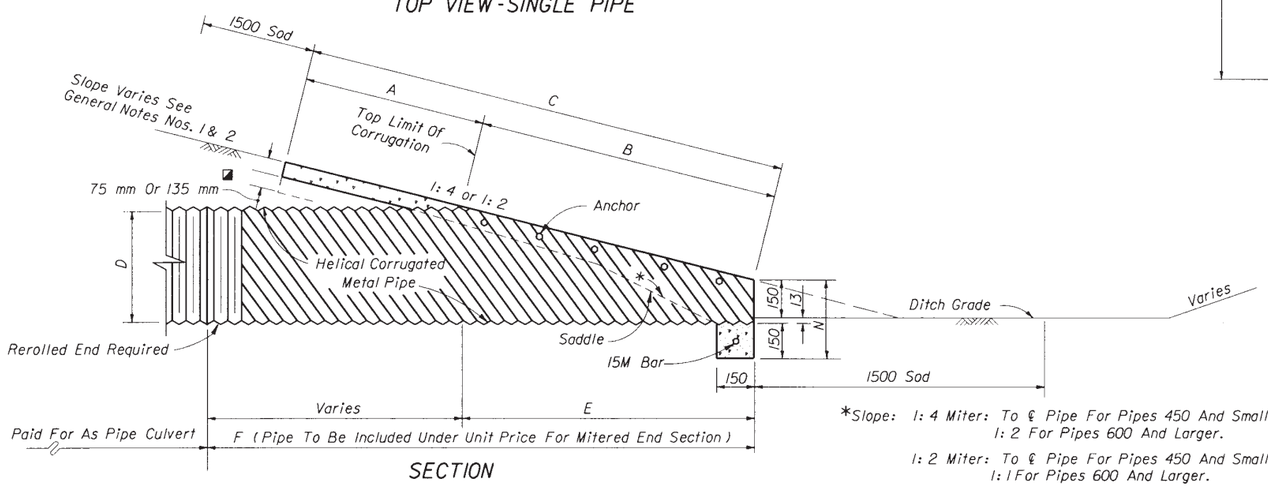

SECTION

*Slope: 1: 4 Miter: To ℄ Pipe For Pipes 450 And Smaller.
1: 2 For Pipes 600 And Larger.

1: 2 Miter: To ℄ Pipe For Pipes 450 And Smaller.
1: 1 For Pipes 600 And Larger.

NOTE: See Sheet 6 For Details And Notes.

STATE OF FLORIDA DEPARTMENT OF TRANSPORTATION
ROAD DESIGN

CROSS DRAIN MITERED END SECTION

SINGLE AND MULTIPLE ROUND CORRUGATED METAL PIPE

	Names	Dates
Designed By	DCB	06/78
Drawn By		
Checked By	KNM	06/78
F.H.W.A. Approved:		07/21/78

Approved By S. A. McLemore
State Drainage Engineer

Revision No.	Sheet No.	Index No.
94	2 of 6	272

1974 AASHTO — DIMENSIONS AND QUANTITIES

	SPAN	RISE	X	A	B	C	E	F	G	M Single Pipe	M Double Pipe	M Triple Pipe	M Quad. Pipe	N	135 CONCRETE SLAB (m^3) ◪ Single Pipe	Double Pipe	Triple Pipe	Quad. Pipe	SODDING (m^2) Single Pipe	Double Pipe	Triple Pipe	Quad. Pipe
1: 2 Slope	410	310	0.76	0.76	0.41	1.17	0.36	1.22	0.42	1.37	2.13	2.90	3.66	0.31	0.31	0.47	0.62	0.78	17.76	19.23	21.74	24.25
	510	360	0.86	0.76	0.53	1.29	0.46	1.52	0.54	1.47	2.34	3.20	4.06	0.31	0.33	0.50	0.67	0.84	18.39	20.90	23.41	25.92
	690	480	1.04	0.76	0.81	1.57	0.71	1.83	0.68	1.65	2.69	3.73	4.78	0.31	0.39	0.60	0.81	1.02	19.23	22.58	25.08	28.43
	860	580	1.22	0.76	1.04	1.80	0.91	2.13	0.78	1.83	3.05	4.27	5.49	0.31	0.44	0.69	0.93	1.19	20.07	24.25	27.59	31.77
	1040	710	1.45	0.76	1.32	2.08	1.17	2.44	0.91	2.01	3.45	4.90	6.35	0.31	0.49	0.80	1.12	1.43	21.74	25.92	30.94	35.12
	1220	810	1.68	0.76	1.55	2.31	1.37	2.74	1.02	2.19	3.86	5.54	7.22	0.31	0.56	0.94	1.32	1.70	23.41	28.43	33.45	38.46
	1420	940	1.93	0.76	1.83	2.59	1.63	3.05	1.11	2.39	4.32	6.25	8.18	0.31	0.63	1.10	1.56	2.02	24.25	30.10	36.79	42.64
	1600	1060	2.16	0.76	2.12	2.88	1.88	3.35	1.19	2.57	4.72	6.88	9.04	0.31	0.73	1.28	1.83	2.38	25.92	32.61	39.30	45.99
	1770	1160	2.39	0.76	2.34	3.10	2.08	3.66	1.26	2.74	5.13	7.52	9.91	0.31	0.80	1.45	2.09	2.73	27.59	34.28	41.81	49.33
1: 4 Slope	410	310	0.76	0.76	0.76	1.52	0.71	2.13	0.42	1.37	2.13	2.90	3.66	0.31	0.37	0.54	0.73	0.90	18.39	20.90	22.58	25.08
	510	360	0.86	0.76	0.96	1.72	0.91	2.44	0.54	1.47	2.34	3.20	4.06	0.31	0.40	0.61	0.83	1.00	19.23	21.74	24.25	26.76
	690	480	1.04	0.76	1.46	2.22	1.42	2.74	0.68	1.65	2.69	3.73	4.78	0.31	0.47	0.70	0.97	1.22	20.90	24.25	27.59	30.94
	860	580	1.22	0.76	1.91	2.67	1.83	3.35	0.78	1.83	3.05	4.27	5.49	0.31	0.56	0.87	1.19	1.51	23.41	26.76	30.94	34.28
	1040	710	1.45	0.76	2.43	3.19	2.34	3.66	0.91	2.01	3.45	4.90	6.35	0.31	0.67	1.06	1.47	1.87	25.08	29.36	34.25	38.46
	1220	810	1.68	0.76	2.85	3.61	2.74	4.27	1.02	2.19	3.86	5.54	7.22	0.31	0.76	1.27	1.76	2.26	26.76	31.77	37.63	42.64
	1420	940	1.93	0.76	3.37	4.13	3.25	4.88	1.11	2.39	4.32	6.25	8.18	0.31	0.90	1.53	2.16	2.78	29.26	35.12	40.97	46.82
	1600	1060	2.16	0.76	3.90	4.66	3.76	5.18	1.19	2.57	4.72	6.88	9.04	0.31	1.04	1.83	2.58	3.32	31.77	37.68	44.31	51.00
	1770	1160	2.39	0.76	4.32	5.08	4.17	5.79	1.26	2.74	5.13	7.52	9.91	0.31	1.15	2.03	2.91	3.80	33.45	40.13	47.66	55.18

◪ See General Note No. 3.
See Sheet 5 Of 6 For 75 mm Slab Quantities

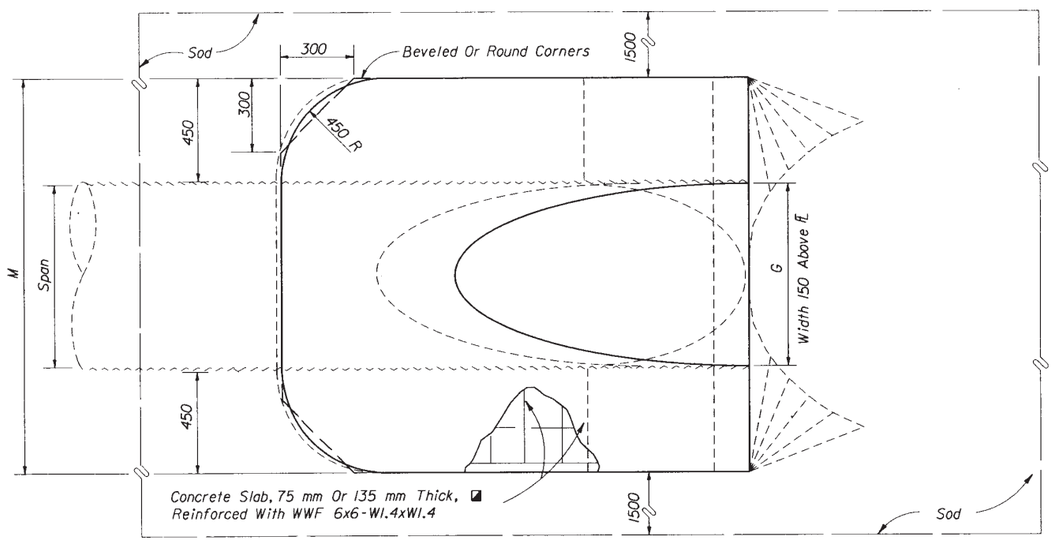

TOP VIEW - SINGLE PIPE

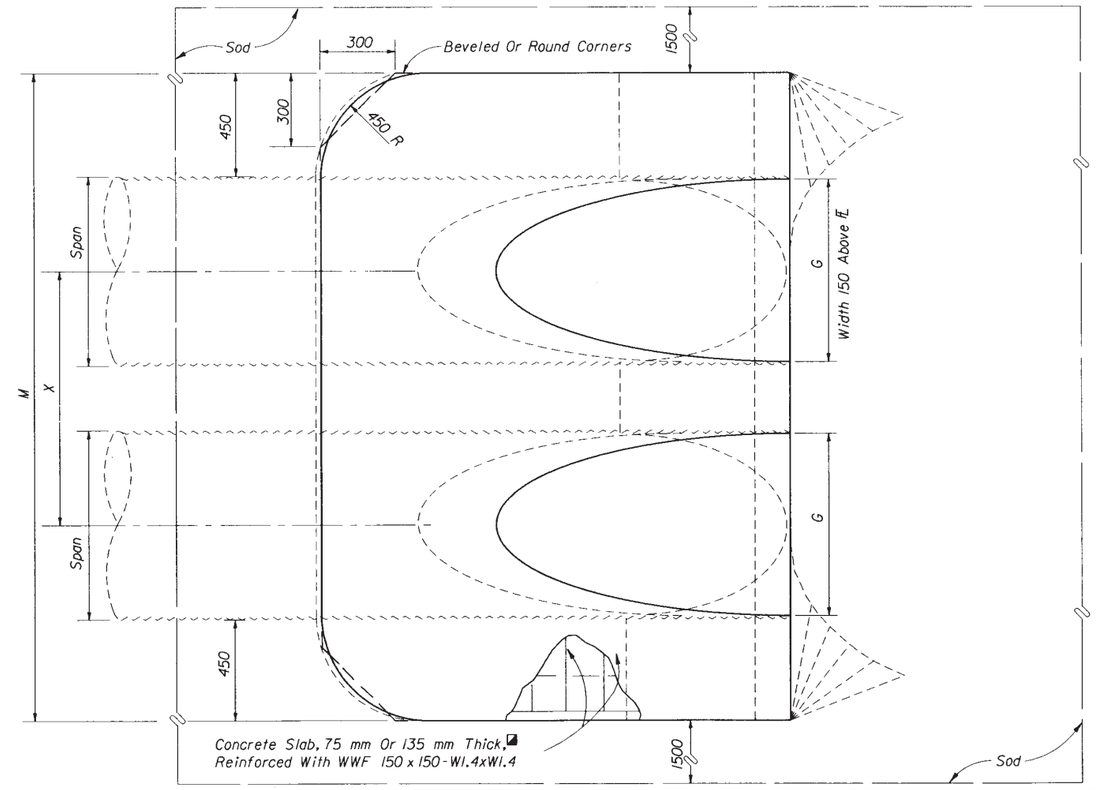

TOP VIEW - MULTIPLE PIPE

NOTE: See Sheet 6 For Details And Notes.

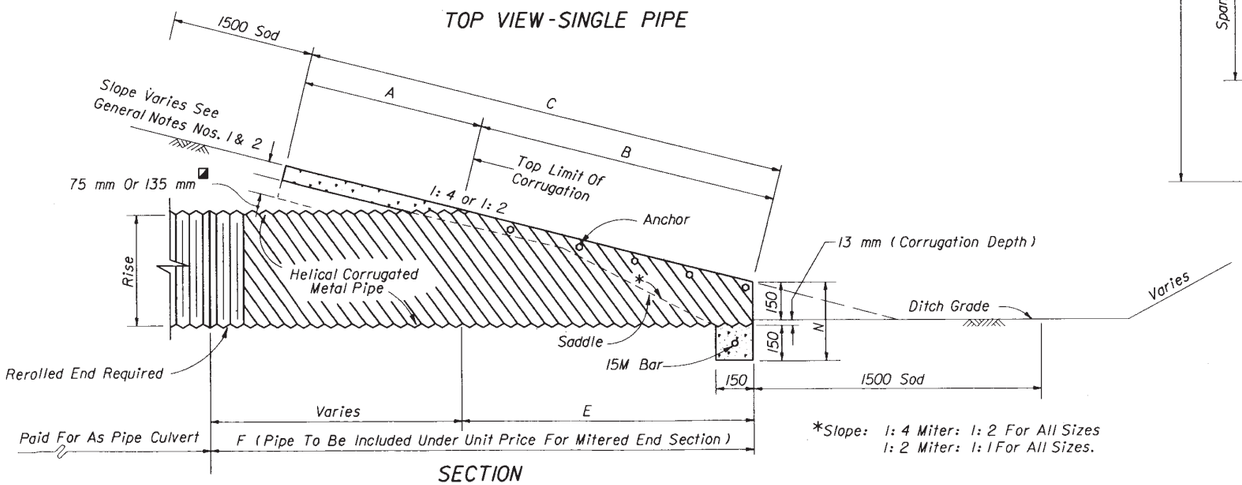

SECTION

*Slope: 1: 4 Miter: 1: 2 For All Sizes
1: 2 Miter: 1: 1 For All Sizes.

STATE OF FLORIDA DEPARTMENT OF TRANSPORTATION
ROAD DESIGN

CROSS DRAIN MITERED END SECTION

SINGLE AND MULTIPLE CORRUGATED METAL PIPE-ARCH

	Names	Dates
Designed By	DCB	06/78
Drawn By		
Checked By	KNM	06/78
F.H.W.A. Approved:		07/21/78

Approved By S. A. McLemore
State Drainage Engineer

Revision No.	Sheet No.	Index No.
94	3 of 6	272

DIMENSIONS & QUANTITIES

	Rise R	Span S	X	A	B	C	E	F	G	M Single Pipe	M Double Pipe	M Triple Pipe	M Quad. Pipe	N	135 mm CONC. SLAB (m³) ◪ Single Pipe	Double Pipe	Triple Pipe	Quad. Pipe	SODDING (m2) Single Pipe	Double Pipe	Triple Pipe	Quad. Pipe
1: 2 Slope	305	460	0.86	0.60	0.49	1.09	0.48	1.22	0.46	1.50	2.36	3.22	4.09	0.37	0.23	0.37	0.51	0.65	17.56	20.07	22.58	25.08
	365	575	1.02	0.61	0.61	1.22	0.58	1.52	0.58	1.64	2.56	3.67	4.69	0.38	0.28	0.45	0.62	0.78	18.39	21.74	24.24	27.59
	490	770	1.22	0.62	0.89	1.53	0.83	1.83	0.72	1.84	3.06	4.28	5.50	0.39	0.38	0.61	0.83	1.06	20.07	23.41	27.59	30.94
	610	960	1.53	0.67	1.18	1.84	1.00	2.13	0.87	2.07	3.59	5.12	6.64	0.40	0.47	0.79	1.11	1.42	21.74	25.92	30.94	35.12
	730	1150	1.80	0.71	1.46	2.17	1.34	2.44	0.97	2.29	4.09	5.86	7.70	0.42	0.57	0.99	1.41	1.83	23.41	28.43	34.28	39.30
	855	1345	2.14	0.74	1.74	2.48	1.59	2.74	1.09	2.51	4.65	6.78	8.92	0.43	0.69	1.23	1.77	2.32	25.08	30.94	37.63	44.31
	975	1535	2.39	0.77	1.97	2.74	1.80	2.74	1.20	2.75	5.11	7.49	9.88	0.45	0.79	1.45	2.09	2.75	25.92	33.45	40.97	47.66
	1095	1730	2.72	0.80	2.25	3.05	2.05	3.05	1.30	2.95	5.66	8.38	11.10	0.46	0.91	1.73	2.55	3.36	27.59	35.95	44.31	52.68
	1220	1920	3.03	0.83	2.54	3.36	2.30	3.35	1.40	3.18	6.20	9.22	12.24	0.47	1.06	2.03	3.00	3.98	29.26	38.46	47.66	56.86
	1340	2110	3.25	0.85	2.82	3.68	2.56	3.66	1.45	3.38	6.63	9.88	13.13	0.48	1.19	2.32	3.44	4.56	30.94	40.97	51.00	61.04
	1465	2305	3.56	0.88	3.11	3.99	2.81	3.96	1.53	3.61	7.16	10.72	14.27	0.50	1.34	2.65	3.98	5.30	32.61	43.48	54.35	65.22
1: 4 Slope	305	460	0.86	0.72	0.92	1.65	0.92	1.52	0.46	1.50	2.36	3.22	4.09	0.37	0.34	0.52	0.70	0.87	19.23	21.74	24.25	26.76
	365	575	1.02	0.74	1.14	1.89	1.13	1.83	0.58	1.64	2.56	3.67	4.69	0.38	0.41	0.63	0.86	1.09	20.07	23.41	26.76	29.26
	490	770	1.22	0.80	1.67	2.47	1.63	2.44	0.72	1.84	3.06	4.28	5.50	0.39	0.57	0.88	1.20	1.51	22.58	26.76	30.10	33.45
	610	960	1.53	0.85	2.19	3.04	2.14	3.05	0.87	2.07	3.59	5.12	6.64	0.40	0.74	1.20	1.67	2.15	25.08	30.10	34.28	39.30
	730	1150	1.80	0.93	2.71	3.64	2.65	3.66	0.97	2.29	4.09	5.86	7.70	0.42	0.93	1.58	2.23	2.88	27.59	33.45	38.46	44.31
	855	1345	2.14	0.98	3.24	4.22	3.16	3.96	1.09	2.51	4.65	6.78	8.92	0.43	1.13	2.00	2.88	3.76	30.10	36.79	43.48	49.33
	975	1535	2.39	1.03	3.65	4.69	3.57	4.57	1.20	2.75	5.11	7.49	9.88	0.45	1.32	2.39	3.46	4.53	31.77	39.30	46.82	54.35
	1095	1730	2.72	1.09	4.18	5.26	4.07	5.18	1.30	2.95	5.66	8.38	11.10	0.46	1.54	2.89	4.25	5.60	34.28	42.64	51.00	59.37
	1220	1920	3.03	1.14	4.70	5.84	4.58	5.79	1.40	3.18	6.20	9.22	12.24	0.47	1.79	3.43	5.08	6.72	36.79	45.99	55.18	64.38
	1340	2110	3.25	1.19	5.23	6.42	5.09	6.10	1.45	3.38	6.63	9.88	13.13	0.48	2.03	3.95	5.86	7.77	39.30	49.33	59.37	69.40
	1465	2305	3.56	1.25	5.75	7.00	5.60	6.71	1.53	3.61	7.16	10.72	14.27	0.50	2.31	4.57	6.84	9.10	41.81	52.68	63.55	74.42

◪ See General Note No. 3.
See Sheet 5 Of 6 For 75 mm Slab Quantities

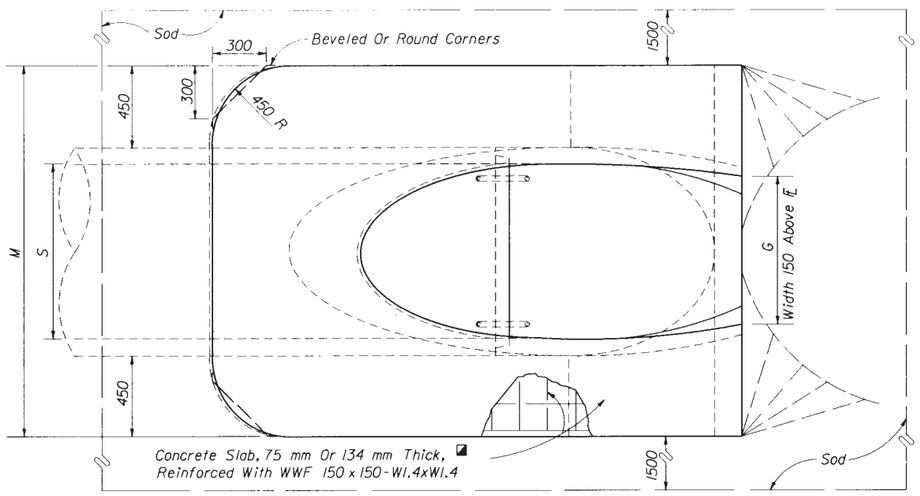

TOP VIEW-SINGLE PIPE

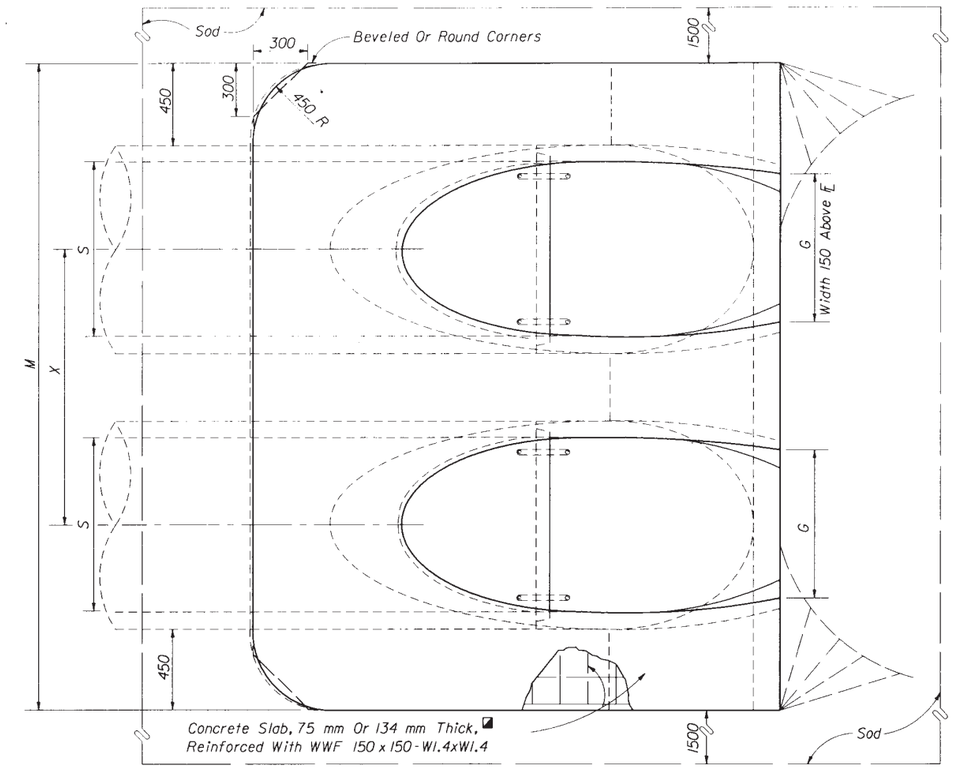

TOP VIEW-MULTIPLE PIPE

NOTE: See Sheet 6 For Details And Notes.

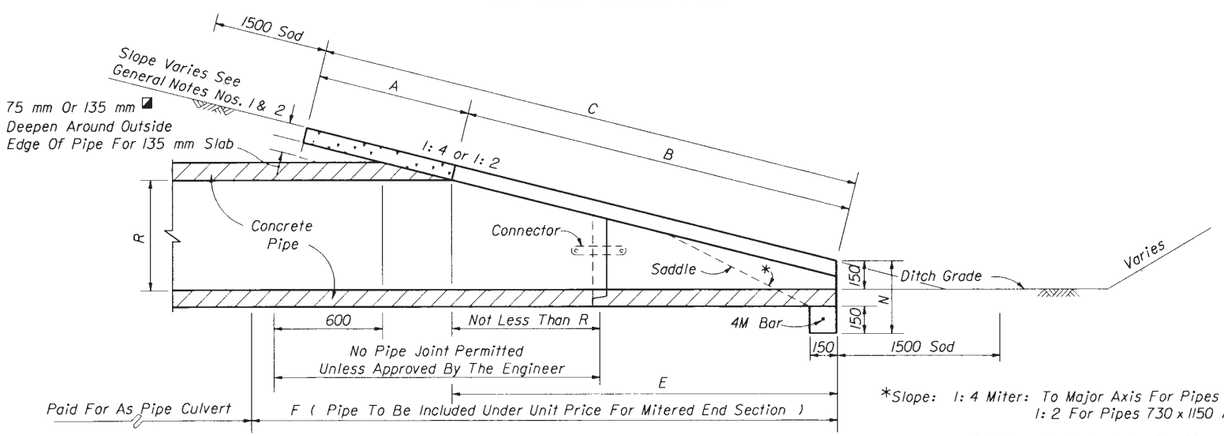

SECTION

*Slope: 1: 4 Miter: To Major Axis For Pipes 610 x 960 And Smaller.
1: 2 For Pipes 730 x 1150 And Larger.

1: 2 Miter: To Major Axis For Pipes 730 x 1150 And Smaller.
1: 1 For Pipes 855 x 1345 And Larger.

STATE OF FLORIDA DEPARTMENT OF TRANSPORTATION
ROAD DESIGN

CROSS DRAIN MITERED END SECTION

SINGLE AND MULTIPLE ELLIPTICAL CONCRETE PIPE

	Names	Dates
Designed By	EGR	06/81
Drawn By	HSD	06/81
Checked By	JVG/JBW	06/81
F.H.W.A. Approved:		10/08/81

Approved By S. A. McLemore
State Drainage Engineer

Revision No.	Sheet No.	Index No.
94	4 of 6	272

QUANTITIES FOR 75 mm THICK CONCRETE SLABS (m^3)

	D	ROUND-CONCRETE			
		Single Pipe	Double Pipe	Triple Pipe	Quad. Pipe
1 : 2 Slope	375	0.21	0.31	0.41	0.51
	450	0.24	0.34	0.46	0.57
	600	0.30	0.45	0.60	0.76
	750	0.35	0.58	0.80	1.01
	900	0.42	0.72	1.02	1.31
	1050	0.50	0.88	1.27	1.64
	1200	0.58	1.05	1.50	1.96
	1350	0.67	1.24	1.82	2.40
	1500	0.76	1.45	2.15	2.85
	1650	0.85	1.64	2.45	3.26
	1800	0.95	1.88	2.81	3.75
1 : 4 Slope	375	0.31	0.47	0.61	0.76
	450	0.36	0.53	0.70	0.87
	600	0.46	0.69	0.93	1.16
	750	0.58	0.91	1.25	1.58
	900	0.68	1.13	1.57	2.01
	1050	0.80	1.39	1.96	2.55
	1200	0.93	1.64	2.35	3.06
	1350	1.06	1.95	2.84	3.73
	1500	1.22	2.31	3.39	4.48
	1650	1.46	2.80	4.13	5.47
	1800	1.62	3.20	4.77	6.35

	D	ROUND-CMP			
		Single Pipe	Double Pipe	Triple Pipe	Quad. Pipe
1 : 2 Slope	375	0.18	0.28	0.39	0.49
	450	0.20	0.33	0.47	0.60
	600	0.24	0.40	0.55	0.70
	750	0.29	0.49	0.70	0.90
	900	0.34	0.60	0.86	1.13
	1050	0.39	0.73	1.08	1.43
	1200	0.44	0.83	1.25	1.64
	1350	0.50	1.01	1.52	2.03
	1500	0.54	1.14	1.74	2.35
1 : 4 Slope	375	0.24	0.36	0.48	0.60
	450	0.26	0.41	0.54	0.69
	600	0.34	0.53	0.70	0.90
	750	0.41	0.67	0.96	1.22
	900	0.47	0.82	1.17	1.53
	1050	0.54	0.99	1.47	1.93
	1200	0.61	1.18	1.75	2.31
	1350	0.70	1.40	2.09	2.81
	1500	0.78	1.64	2.50	3.36

	Span	Rise	CMP-ARCH			
			Single Pipe	Double Pipe	Triple Pipe	Quad. Pipe
1 : 2 Slope	450	340	0.25	0.37	0.50	0.62
	510	380	0.25	0.38	0.51	0.63
	680	500	0.28	0.43	0.58	0.73
	910	660	0.31	0.47	0.64	0.82
	1030	740	0.33	0.54	0.75	0.96
	1150	820	0.37	0.63	0.88	1.13
	1390	970	0.42	0.73	1.03	1.34
	1630	1120	0.47	0.84	1.20	1.57
	1880	1260	0.53	0.95	1.38	1.80
1 : 4 Slope	450	340	0.29	0.43	0.57	0.72
	510	380	0.30	0.45	0.61	0.73
	680	500	0.33	0.49	0.67	0.84
	910	660	0.37	0.59	0.80	1.02
	1030	740	0.44	0.70	0.97	1.24
	1150	820	0.50	0.83	1.15	1.48
	1390	970	0.58	0.99	1.40	1.81
	1630	1120	0.67	1.19	1.67	2.16
	1880	1260	0.73	1.28	1.86	2.42

	Rise	Span	ELLIPTICAL-CONCRETE			
			Single Pipe	Double Pipe	Triple Pipe	Quad. Pipe
1 : 2 Slope	305	460	0.14	0.25	0.34	0.44
	365	575	0.19	0.31	0.42	0.53
	490	770	0.26	0.42	0.57	0.73
	610	960	0.33	0.54	0.76	0.98
	730	1150	0.40	0.69	0.97	1.26
	855	1345	0.47	0.85	1.22	1.60
	975	1535	0.54	0.99	1.43	1.88
	1095	1730	0.62	1.18	1.73	2.29
	1220	1920	0.71	1.37	2.03	2.70
	1340	2110	0.80	1.56	2.32	3.07
	1465	2305	0.89	1.78	2.67	3.56
1 : 4 Slope	305	460	0.23	0.34	0.47	0.58
	365	575	0.28	0.43	0.58	0.73
	490	770	0.39	0.60	0.83	1.04
	610	960	0.52	0.84	1.17	1.50
	730	1150	0.66	1.11	1.56	2.01
	855	1345	0.78	1.38	1.99	2.59
	975	1535	0.90	1.64	2.37	3.10
	1095	1730	1.06	1.97	2.90	3.82
	1220	1920	1.22	2.33	3.45	4.56
	1340	2110	1.38	2.68	3.97	5.26
	1465	2305	1.56	3.09	4.63	6.15

STATE OF FLORIDA DEPARTMENT OF TRANSPORTATION
ROAD DESIGN

CROSS DRAIN MITERED END SECTION

	Names	Dates
Designed By		
Drawn By	dds	05/86
Checked By	JBW	05/86
F.H.W.A. Approved:		11/07/86

Approved By S A McLaughlin
State Drainage Engineer

Revision No.	Sheet No.	Index No.
94	5 of 6	272

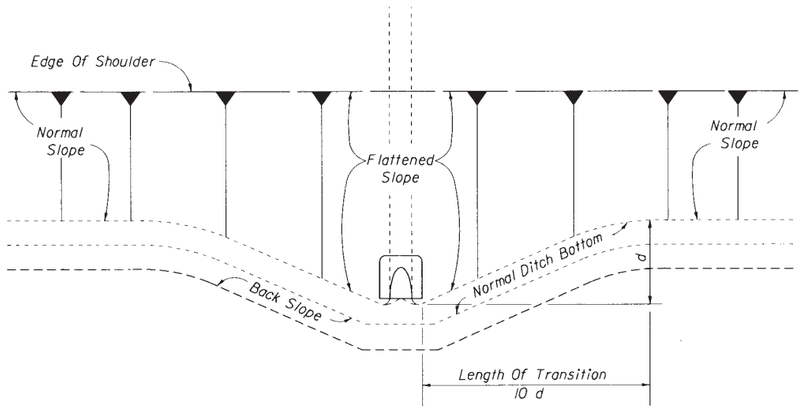

PLAN

NOTE: See General Note 2

SLOPE AND DITCH TRANSITIONS

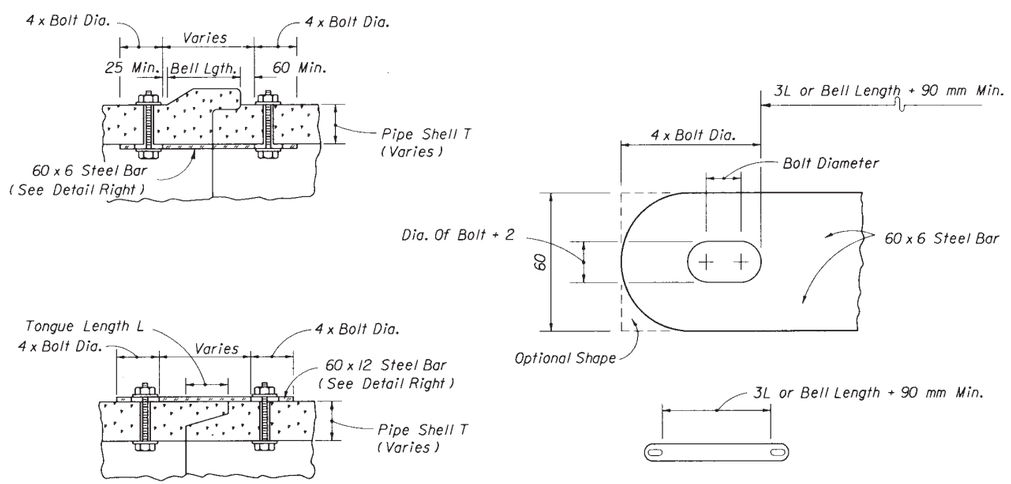

All bars, bolts, nuts and washers are to be galvanized steel.
Bolt diameters shall be 10 mm for 375 mm to 900 mm pipe and 15 mm for 1050 mm to 1800 mm pipe.
Two connectors required per joint, located 60° right and left of bottom center of pipe.
Bolt holes in pipe shell are to be drilled.

CONCRETE PIPE CONNECTOR

GENERAL NOTES

1. Mitered end sections for pipe sizes 375 mm, 450 mm and 600 mm round or equivalent pipe arch or elliptical pipe are permitted within the clear zone. When the slope intersection permits, the mitered end section may be located with the culvert opening as close as 2.5 m beyond the outside edge of the shoulder.
2. Slope and ditch transitions shall be used when the normal roadway slope must be flattened to place end section outside clear zone. See detail left.
3. The reinforced concrete slab shall be constructed for all sizes of cross drain pipe and cast in place with Class I concrete. Slabs shall be 135 mm thick unless 75 mm thickness called for in plans.
4. Concrete pipe used in the assembly of mitered end sections shall be selective lengths to avoid excessive connections.
5. Corrugated metal pipe galvanizing that is damaged during beveling and perforating for mitered end section shall be repaired.
6. That portion of corrugated metal pipe in direct contact with the concrete slab shall be bituminous coated prior to placing of the concrete.
7. Unless otherwise designated in the plans, concrete pipe mitered end sections may be used with any type of cross drain pipe; corrugated steel pipe mitered end sections may be used with any type of cross drain pipe except aluminum pipe; and, corrugated aluminum mitered end sections may be used with any type of cross drain pipe except steel pipe. When bituminous coated metal pipe is specified for cross drain pipe, mitered end sections shall be constructed with like pipe or concrete pipe.
8. When the mitered end section pipe is dissimilar to the cross drain pipe, a concrete jacket shall be constructed in accordance with Standard Index 280.
9. When existing multiple cross drain pipes are spaced other than the dimensions shown in this detail, or have non-parallel axes, or have non-uniform sections, the mitered end sections will be constructed either separately as single pipe mitered end sections or collectively as multiple pipe end sections as directed by the Engineer; however, mitered end sections will be paid for each based on each independent pipe end.
10. The cost of all pipe(s), fasteners, reinforcing, connectors, anchors, concrete, sealants, jackets, and coupling bands shall be included in the cost for the mitered end section. Sodding shall be paid for separately under the contract unit price of Sodding, M2.
11. Mitered end sections shall be paid for under the contract unit price for Mitered End Section (CD), EA, based on each independent pipe end. Mitered end sections used for detention/retention basin outlets are to be paid for under the contract unit price for Mitered End Section (BO), EA.

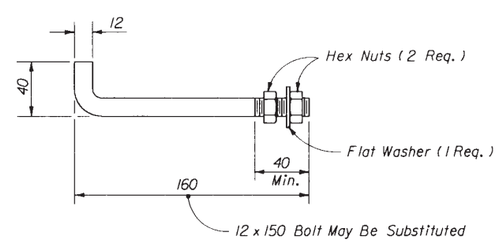

Anchors required for CMP only.

Anchor, washer and nuts to be galvanized steel.

Bend anchor where required to center in concrete slab. Damaged surfaces to be repaired after bending. Anchors are to be spaced a distance equal to four (4) corrugations. Place the anchors in the outside crest of corrugation.

Flat washers to be placed on inside wall of pipe.

Holes in the mitered end pipe are to be drilled or punched; burning not permitted.

ANCHOR DETAIL

STATE OF FLORIDA DEPARTMENT OF TRANSPORTATION
ROAD DESIGN

CROSS DRAIN MITERED END SECTION

SPECIAL DETAILS AND NOTES

	Names	Dates	Approved By
Designed By	DCB	06/78	S.A. McLemore, State Drainage Engineer
Drawn By			
Checked By	KNM	06/78	
F.H.W.A. Approved:		07/21/78	

Revision No.	Sheet No.	Index No.
94	6 of 6	272

DIMENSIONS & QUANTITIES

D	X	A	B	C	E	F	G	M Single Pipe	M Double Pipe	M Triple Pipe	M Quad Pipe	N	GRATE SIZES Standard Weight Pipe	GRATE SIZES Extra Strong Pipe	CONCRETE (m^3) Single Pipe	CONCRETE (m^3) Double Pipe	CONCRETE (m^3) Triple Pipe	CONCRETE (m^3) Quad Pipe	SODDING (m^2) Single Pipe	SODDING (m^2) Double Pipe	SODDING (m^2) Triple Pipe	SODDING (m^2) Quad Pipe
375	0.79	0.67	1.27	1.94	1.23	2.44	0.37	1.41	2.20	2.98	3.77	0.36			0.58	0.89	1.18	1.48	7	8	9	10
450	0.86	0.74	1.54	2.28	1.53	2.74	0.43	1.50	2.36	3.22	4.09	0.37			0.65	0.98	1.31	1.66	8	8	10	11
600	1.04	0.75	2.21 △	2.96	2.14 △	3.35	0.53	1.68	2.72	3.76	4.80	0.38			0.78	1.21	1.64	2.10	8	10	11	13
750	1.30	0.80	2.84	3.64	2.75	3.96	0.61	1.85	3.15	4.44	5.74	0.39	65	75	0.94	1.51	2.09	2.68	10	12	13	14
900	1.55	0.85	3.47 ◇	4.32	3.36 ◇	4.57	0.68	2.03	3.58	5.13	6.68	0.41	65	75	1.07	1.82	2.55	3.24	11	13	14	17
1050	1.83	0.90	4.10	5.00	3.97	5.18	0.75	2.21	4.04	5.87	7.70	0.42	65	87	1.22	2.16	3.09	4.02	12	14	16	18
1200	2.06	0.95	4.73	5.68	4.58	5.79	0.81	2.37	4.44	6.50	8.56	0.43	65	87	1.38	2.49	3.59	4.69	13	15	18	20
1350	2.34	1.00	5.36	6.36	5.19	6.40	0.86	2.57	4.90	7.24	9.58	0.45	75	100	1.55	2.89	4.24	5.57	14	17	19	23
1500	2.59	1.06	5.98	7.04	5.80	7.01	0.91	2.74	5.33	7.92	10.52	0.46	75	100	1.74	3.33	4.92	6.50	15	18	21	24

△ 1.96 m △ 1.91 m Dimensions permitted to allow use of 2.44 m standard pipe lengths.
◇ 3.17 m ◇ 3.08 m Dimensions permitted to allow use of 3.66 m standard pipe lengths.
△ ◇ Concrete slab shall be deepened to form bridge across crown of pipe. See section below.

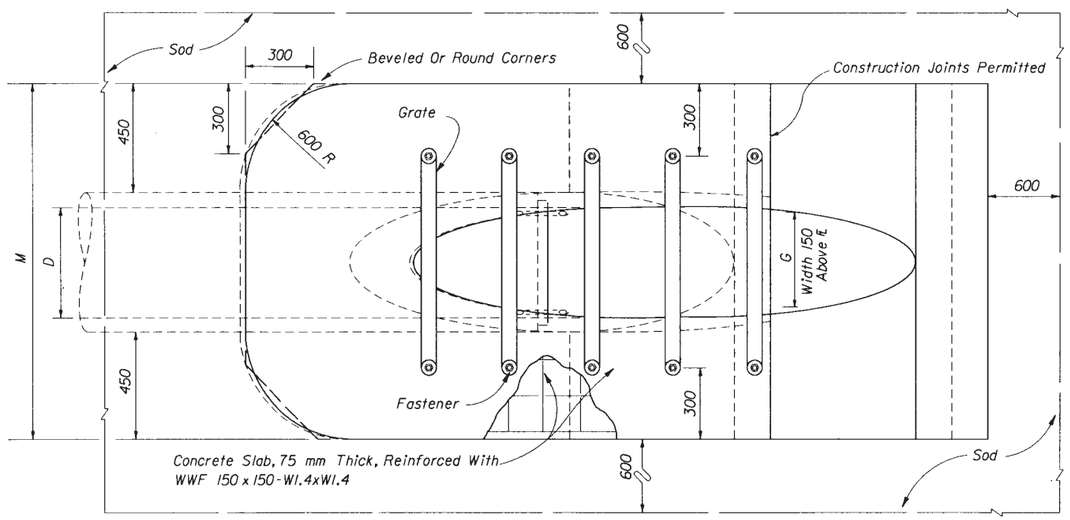

TOP VIEW-SINGLE PIPE

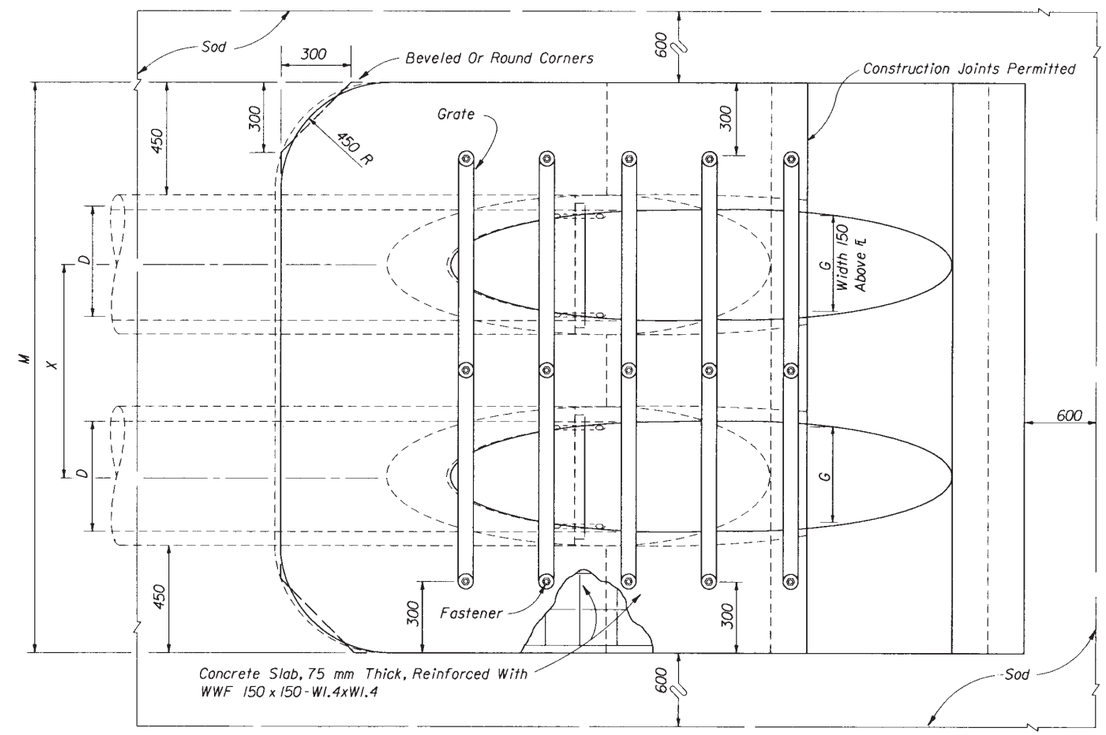

TOP VIEW-MULTIPLE PIPE

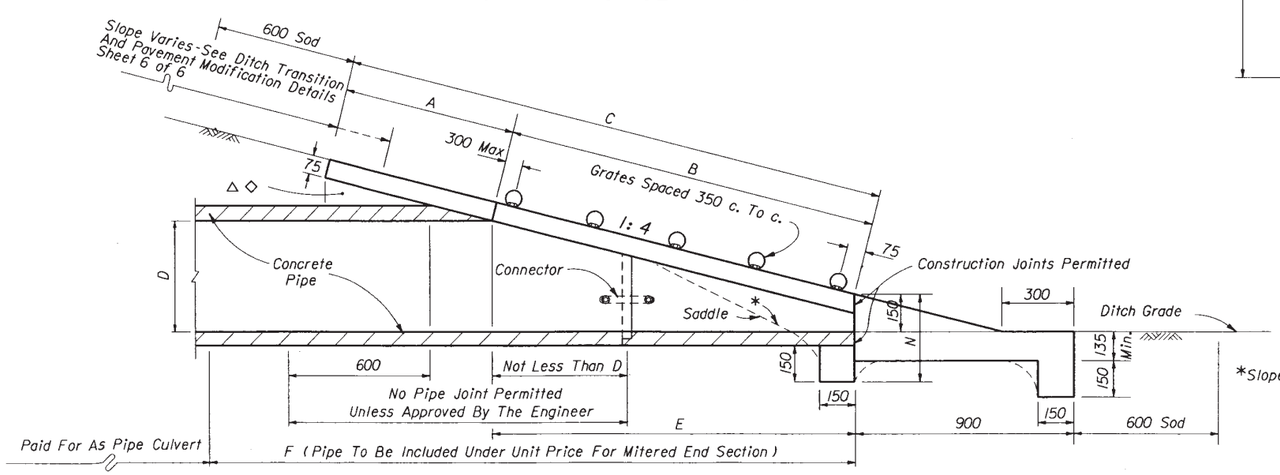

SECTION

*Slope:
To ℄ Pipe For Pipes 450 And Smaller
1: 2 For Pipes 600 And Larger.

Note: See Sheets 5 and 6 for details and general notes.

STATE OF FLORIDA DEPARTMENT OF TRANSPORTATION
ROAD DESIGN

SIDE DRAIN MITERED END SECTION

SINGLE AND MULTIPLE ROUND CONCRETE PIPE

	Names	Dates
Designed By	EGR	06/78
Drawn By	HKH	06/78
Checked By	JVG	06/78
F.H.W.A. Approved:		10/21/77

Approved By S A McLemore
State Drainage Engineer

Revision No.	Sheet No.	Index No.
94	1 of 6	273

DIMENSIONS & QUANTITIES

D	X	A	B	C	E	F	G	M Single Pipe	M Double Pipe	M Triple Pipe	M Quad. Pipe	N	Grate Sizes Standard Weight Pipe	Grate Sizes Extra Strong Pipe	Concrete (m^3) Single Pipe	Concrete (m^3) Double Pipe	Concrete (m^3) Triple Pipe	Concrete (m^3) Quad. Pipe	Sodding (m^2) Single Pipe	Sodding (m^2) Double Pipe	Sodding (m^2) Triple Pipe	Sodding (m^2) Quad. Pipe
200	0.61	0.76	0.22	0.98	0.21	1.22	0.18	1.14	1.75	2.36	2.97	0.32			0.40	0.69	0.93	1.18	6	7	7	8
250	0.66	0.76	0.43	1.19	0.40	1.52	0.25	1.20	1.85	2.52	3.17	0.32			0.49	0.76	1.02	1.30	6	7	8	8
300	0.71	0.76	0.64	1.40	0.61	1.83	0.31	1.24	1.96	2.67	3.38	0.32			0.52	0.83	1.13	1.44	6	7	8	9
375	0.79	0.76	0.95	1.71	0.91	2.13	0.38	1.32	2.11	2.90	3.68	0.32			0.49	0.76	1.03	1.31	7	8	8	9
450	0.86	0.76	1.27	2.03	1.22	2.44	0.43	1.40	2.26	3.12	3.99	0.32			0.53	0.83	1.14	1.45	8	8	9	10
600	1.04	0.76	1.89	2.65	1.83	3.05	0.53	1.55	2.59	3.63	4.67	0.32			0.64	1.02	1.39	1.79	8	9	11	12
750	1.30	0.76	2.52	3.28	2.44	3.66	0.61	1.70	2.30	4.29	5.59	0.32	65	75	0.73	1.25	1.77	2.29	9	11	13	14
900	1.55	0.76	3.15	3.91	3.05	4.27	0.68	1.85	3.41	4.95	6.50	0.32	65	75	0.83	1.47	2.12	2.77	10	12	14	16
1050	1.82	0.76	3.78	4.54	3.66	4.88	0.75	2.01	3.83	5.66	7.49	0.32	65	87	0.92	1.73	2.55	3.52	11	13	15	18
1200	2.06	0.76	4.41	5.17	4.27	5.49	0.81	2.16	4.22	6.27	8.33	0.32	65	87	1.22	2.38	3.53	4.68	12	14	17	19
1350	2.34	0.76	5.04	5.80	4.88	6.10	0.86	2.30	4.65	6.99	9.32	0.32	75	100	1.35	2.72	4.08	5.46	13	14	18	22
1500	2.59	0.76	5.67	6.43	5.49	6.71	0.91	2.46	5.05	7.64	10.24	0.32	75	100	1.48	3.08	4.68	6.27	14	17	20	23

REMARKS

These sizes are restricted to inlet and outlet treatment for water management systems or similar applications.

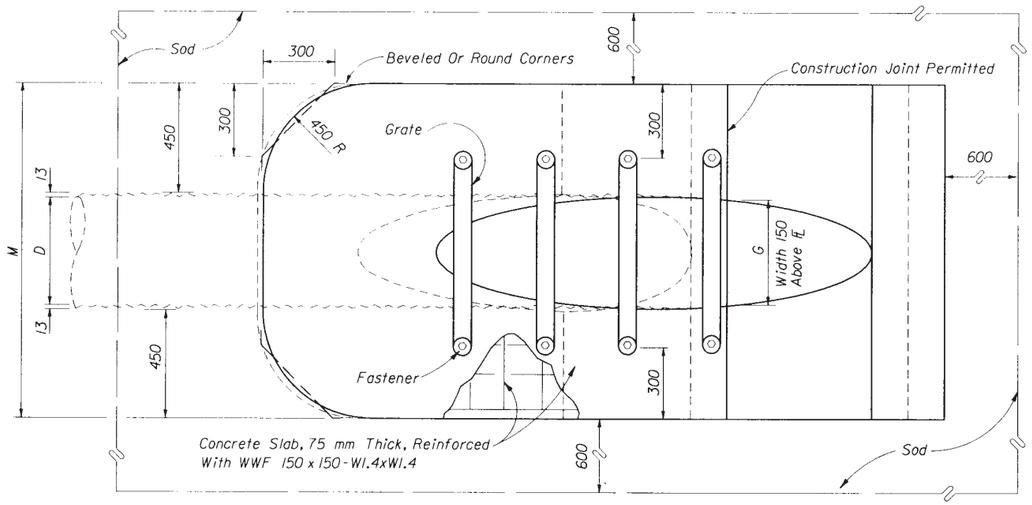

TOP VIEW-SINGLE PIPE

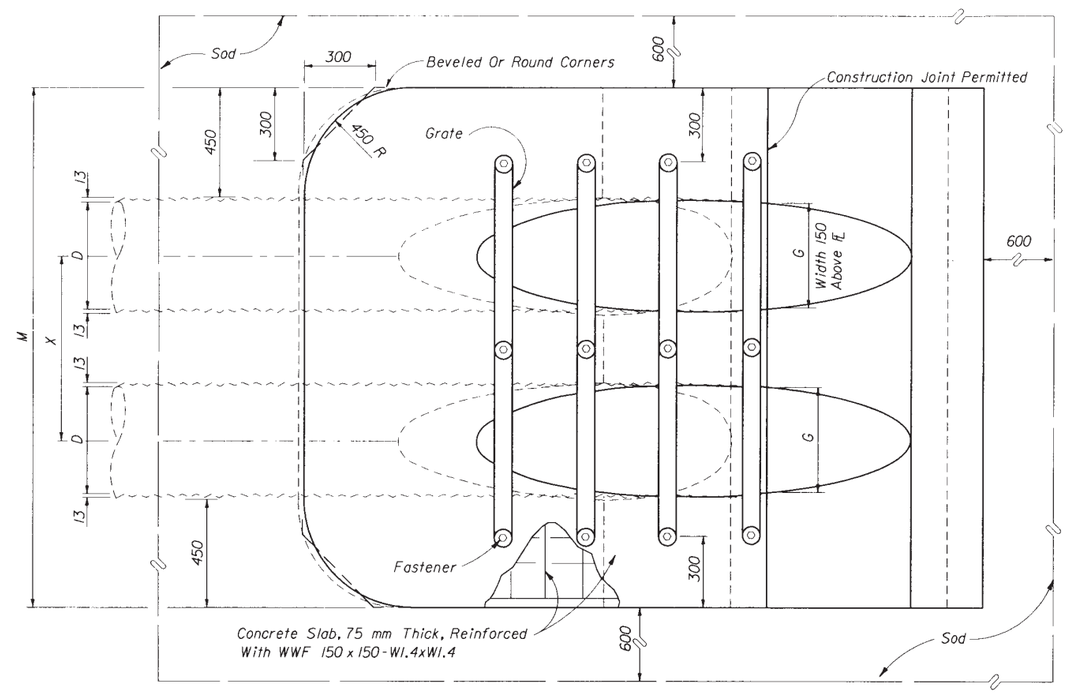

TOP VIEW-MULTIPLE PIPE

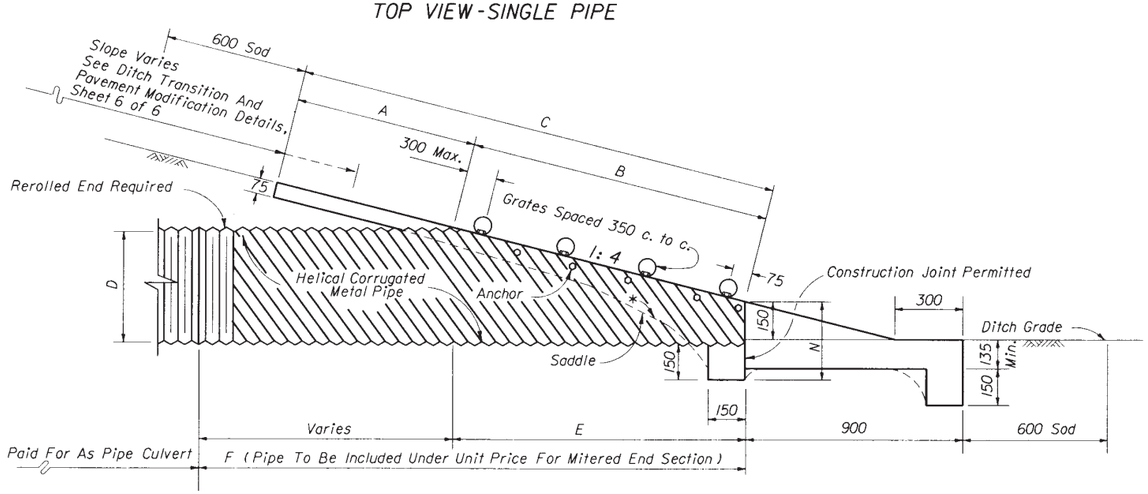

SECTION

NOTE: See Sheets 5 and 6 for details and general notes.

*Slope:

To ℄ Pipe For Pipe 450 And Smaller
1:2 For Pipe 600 And Larger

STATE OF FLORIDA DEPARTMENT OF TRANSPORTATION
ROAD DESIGN

SIDE DRAIN MITERED END SECTION

SINGLE AND MULTIPLE ROUND CORRUGATED METAL PIPE

	Names	Dates
Designed By	EGR	08/77
Drawn By	HKH	08/77
Checked By	JVG	08/77
F.H.W.A. Approved:		10/21/77

Approved By J. A. McLemore
State Drainage Engineer

Revision No.	Sheet No.	Index No.
94	2 of 6	273

DIMENSIONS & QUANTITIES

1974 AASHTO									M					GRATE SIZES		CONCRETE (m³)				SODDING (m²)			
Span	Rise	X	A	B	C	E	F	G	Single Pipe	Double Pipe	Triple Pipe	Quad. Pipe	N	Standard Weight Pipe	Extra Strong Pipe	Single Pipe	Double Pipe	Triple Pipe	Quad. Pipe	Single Pipe	Double Pipe	Triple Pipe	Quad. Pipe
450	340	0.76	0.76	0.74	1.50	0.71	2.13	0.42	1.37	2.13	2.90	3.66	315			0.47	0.73	0.97	1.22	7	8	9	9
510	380	0.86	0.76	0.95	1.71	0.91	2.44	0.54	1.47	2.34	3.20	4.06	315			0.53	0.81	1.10	1.35	7	8	9	10
680	500	1.07	0.76	1.48	2.24	1.42	2.74	0.68	1.65	2.69	3.73	4.78	315			0.62	0.96	1.32	1.67	8	9	10	12
910	660	1.22	0.76	1.89	2.65	1.83	3.35	0.78	1.83	3.05	4.27	5.49	315	65	75	0.72	1.15	1.60	2.03	9	10	12	13
1030	740	1.45	0.76	2.42	3.18	2.33	3.66	0.91	2.01	3.45	4.91	6.35	315	65	87	0.81	1.35	1.88	3.42	9	11	13	14
1150	820	1.68	0.76	2.84	3.60	2.74	4.27	1.02	2.19	3.86	5.54	7.21	315	65	87	0.91	1.54	2.17	2.58	10	12	14	16
1390	970	1.93	0.76	3.36	4.12	3.25	4.88	1.11	2.39	4.32	6.25	8.18	315	75	100	1.03	1.80	2.56	3.33	11	14	16	18
1630	1120	2.16	0.76	3.88	4.64	3.76	5.18	1.19	2.57	4.72	6.88	9.04	315	75	100	1.15	2.06	2.95	3.85	12	14	17	20
1880	1260	2.39	0.76	4.30	5.06	4.17	5.79	1.26	2.74	5.13	7.52	9.91	315	75	100	1.25	2.25	3.26	4.27	13	15	18	21

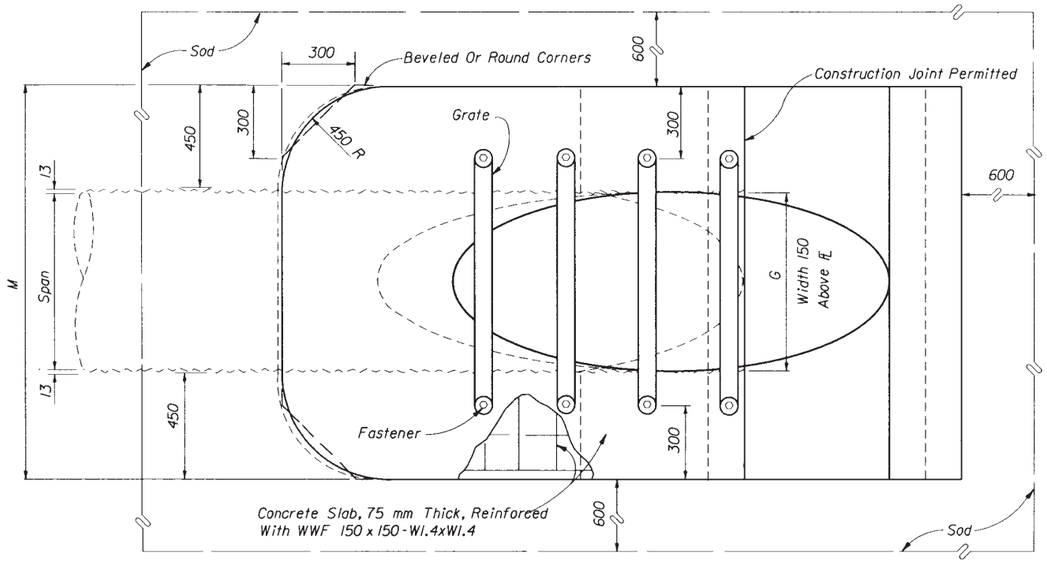

TOP VIEW-SINGLE PIPE

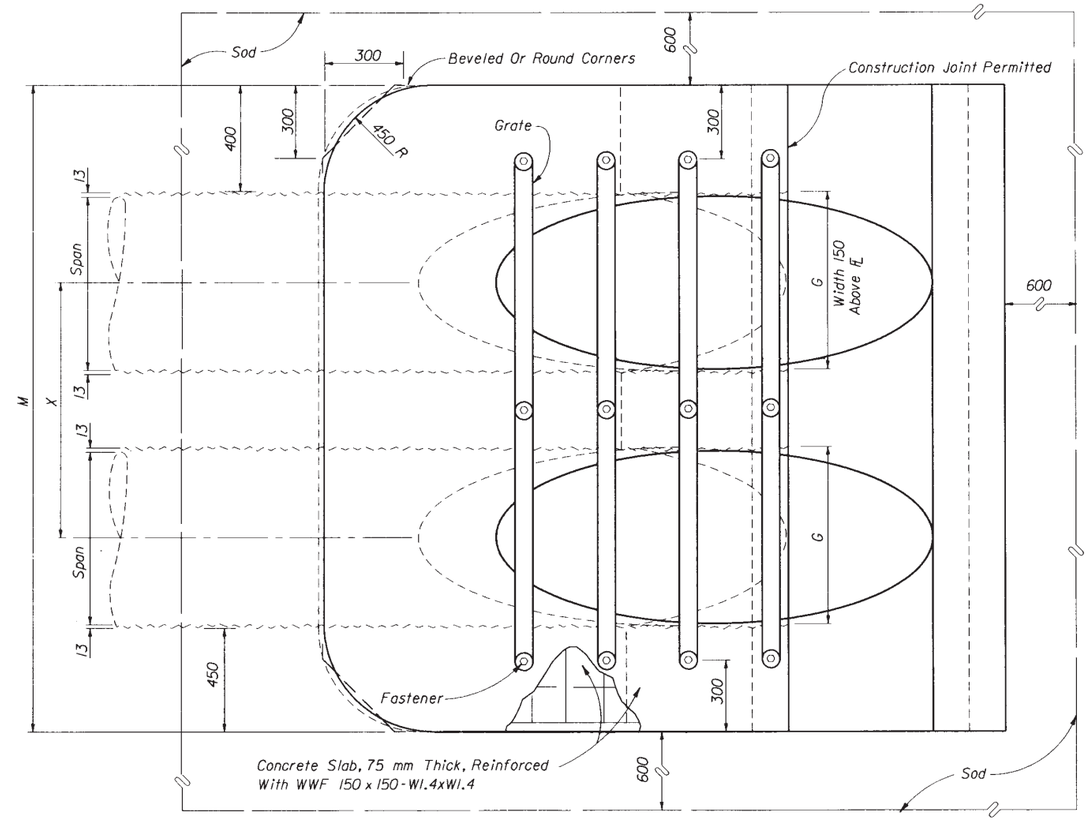

TOP VIEW-MULTIPLE PIPE

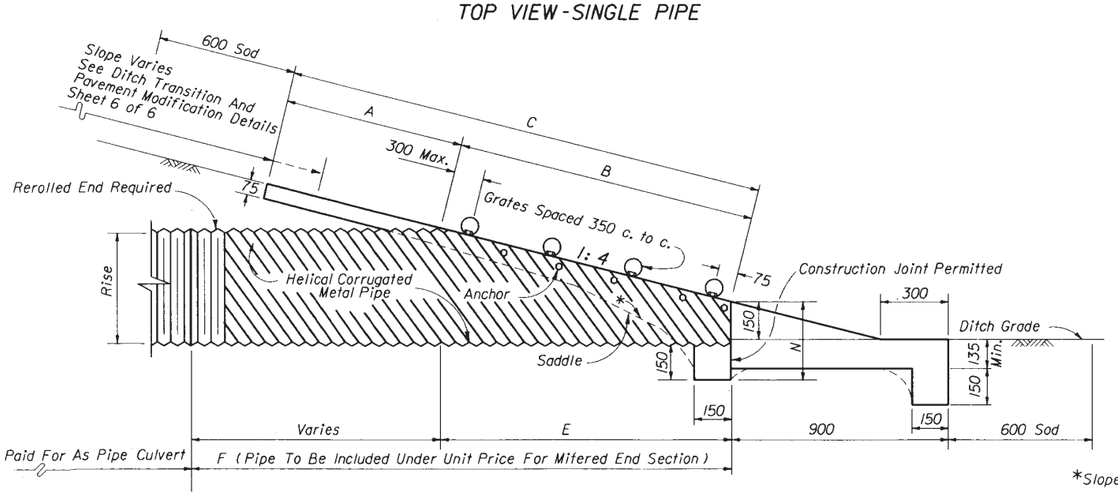

SECTION

NOTE: See Sheets 5 and 6 for details and general notes.

*Slope:
To Span Line For Pipe Arch 680 x 500 And Smaller
1: 2 For Pipe Arch 910 x 660 And Larger

STATE OF FLORIDA DEPARTMENT OF TRANSPORTATION
ROAD DESIGN

SIDE DRAIN MITERED END SECTION

SINGLE AND MULTIPLE CORRUGATED METAL PIPE-ARCH

	Names	Dates
Designed By	EGR	08/77
Drawn By	HKH	08/77
Checked By	JVG	08/77
F.H.W.A. Approved:		10/21/77

Approved By S. A. McLemore
State Drainage Engineer

Revision No.	Sheet No.	Index No.
94	3 of 6	273

DIMENSIONS & QUANTITIES

Rise R	Span S	X	A	B	C	E	F	G	M Single Pipe	M Double Pipe	M Triple Pipe	M Quad. Pipe	N	GRATE SIZES Standard Weight Pipe	GRATE SIZES Extra Strong Pipe	CONCRETE (m^3) Single Pipe	CONCRETE (m^3) Double Pipe	CONCRETE (m^3) Triple Pipe	CONCRETE (m^3) Quad. Pipe	SODDING (m^2) Single Pipe	SODDING (m^2) Double Pipe	SODDING (m^2) Triple Pipe	SODDING (m^2) Quad. Pipe
305	460	0.86	0.69	0.96	1.65	0.92	1.52	0.46	1.50	2.36	3.22	4.09	0.36			0.52	0.80	1.08	1.35	7	8	9	10
365	575	1.02	0.72	1.17	1.89	1.13	1.83	0.58	1.64	2.65	3.67	4.69	0.36			0.58	0.91	1.25	1.57	8	8	10	11
490	770	1.22	0.78	1.69	2.47	1.63	2.44	0.72	1.84	3.06	4.28	5.50	0.38	65	75	0.73	1.16	1.60	2.03	8	10	11	13
610	960	1.52	0.83	2.21	3.04	2.14	3.05	0.87	2.07	3.59	5.12	6.64	0.39	65	75	0.90	1.49	2.09	2.70	9	11	13	15
730	1150	1.80	0.90	2.74	3.64	2.65	3.66	0.97	2.29	4.09	5.89	7.70	0.40	65	87	1.08	1.85	2.63	3.40	10	13	15	17
855	1345	2.13	0.96	3.26	4.22	3.16	3.96	1.09	2.51	4.65	6.78	8.92	0.41	75	87	1.25	2.23	3.23	4.22	11	14	17	19
975	1535	2.39	1.01	3.68	4.69	3.57	4.57	1.20	2.72	5.11	7.49	9.88	0.43	75	100	1.40	2.57	3.74	4.90	12	15	18	21
1095	1730	2.72	1.06	4.20	5.26	4.07	5.18	1.30	2.95	5.66	8.38	11.10	0.44	75	100	1.60	3.02	4.43	5.85	13	17	19	23
1220	1920	3.02	1.11	4.73	5.84	4.58	5.79	1.40	3.18	6.20	9.22	12.24	0.45	Special	Special	1.81	3.47	5.15	6.82	14	18	22	25
1340	2110	3.25	1.17	5.25	6.42	5.09	6.10	1.45	3.38	6.63	9.88	13.13	0.47	Special	Special	2.00	3.89	57.8	7.67	15	19	23	27
1465	2305	3.56	1.23	5.77	7.00	5.60	6.71	1.53	3.61	7.16	10.72	1.427	0.48	Special	Special	2.22	4.41	6.61	8.79	16	20	24	29

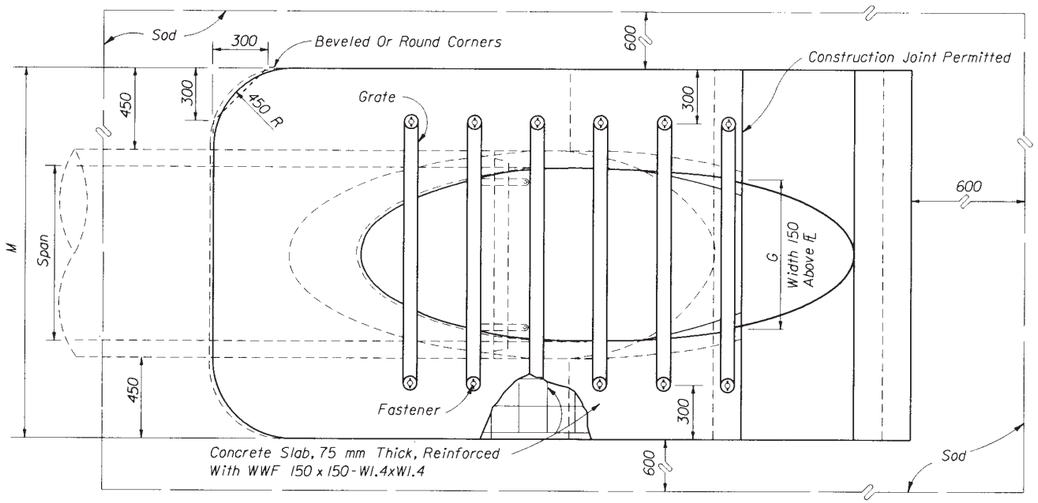

TOP VIEW-SINGLE PIPE

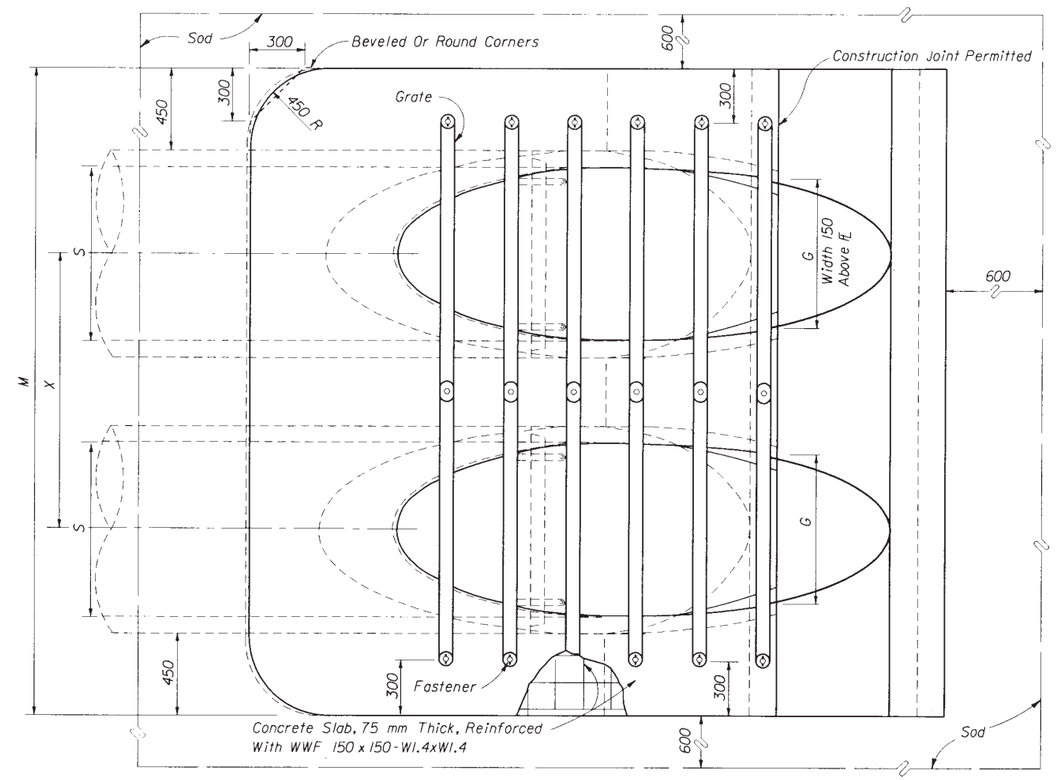

TOP VIEW-MULTIPLE PIPE

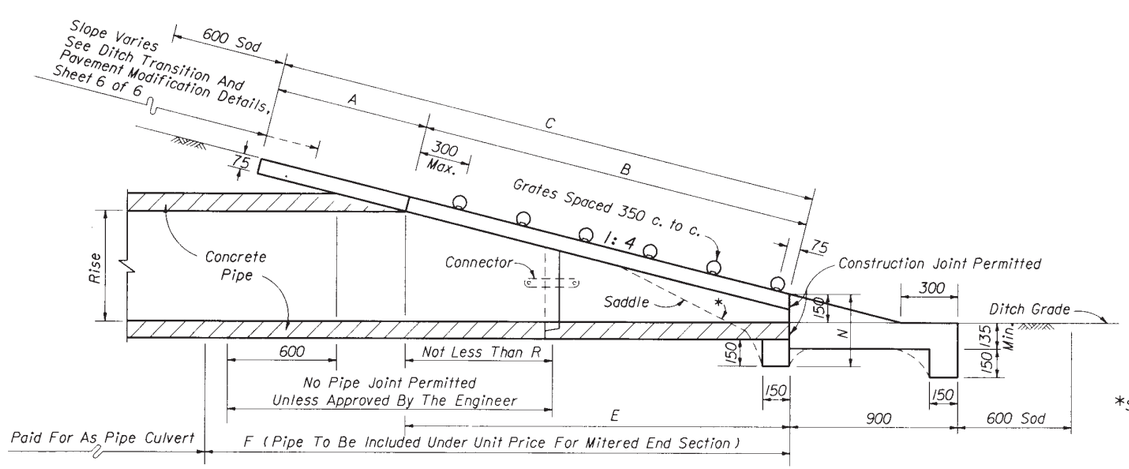

SECTION

NOTE: See Sheets 5 and 6 for details and general notes.

*Slope:
To Major Axis For Pipes 610 x 960 And Smaller.
1: 2 For Pipes 730 x 1150 And Larger.

STATE OF FLORIDA DEPARTMENT OF TRANSPORTATION
ROAD DESIGN

SIDE DRAIN MITERED END SECTION

SINGLE AND MULTIPLE ELLIPTICAL CONCRETE PIPE

	Names	Dates
Designed By	EGR	06/81
Drawn By	HSD	06/81
Checked By	JVG/JBW	06/81
F.H.W.A. Approved:		10/08/81

Approved By S.A. McLemore
State Drainage Engineer

Revision No.	Sheet No.	Index No.
94	4 of 6	273

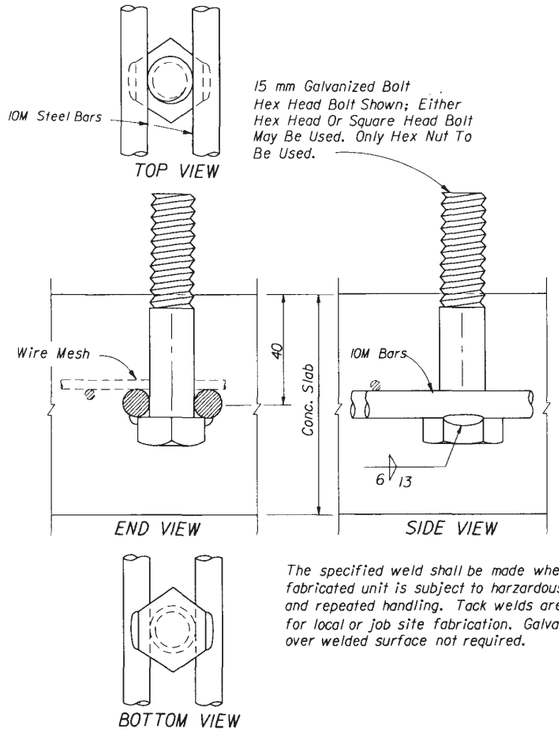

The specified weld shall be made when the fabricated unit is subject to harzardous hauls and repeated handling. Tack welds are permitted for local or job site fabrication. Galvanizing over welded surface not required.

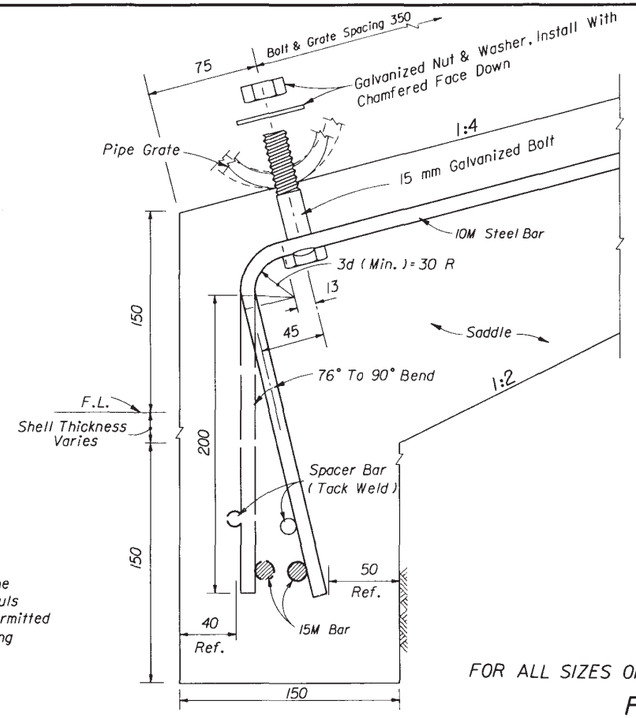

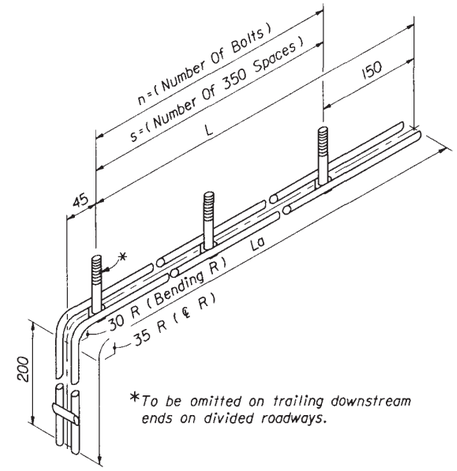

*To be omitted on trailing downstream ends on divided roadways.

FOR ALL SIZES OF SINGLE AND MULTIPLE DRAIN PIPE

FASTENER UNIT

Drain Size	s	n	L	La
CONCRETE PIPE (ROUND)				
375	3	4	1.22	1.52
450	4	5	1.57	1.87
600	6	7	2.29	2.59
750	7	8	2.64	2.94
900	9	10	3.35	3.65
1050	11	12	4.06	4.36
1200	13	14	4.78	5.08
1350	14	15	5.13	5.43
1500	16	17	5.84	6.14
CORRUGATED METAL PIPE (ROUND)				
375	2	3	0.86	1.16
450	3	4	1.22	1.52
600	5	6	1.93	2.23
750	7	8	2.64	2.94
900	8	9	3.00	3.30
1050	10	11	3.71	4.01
1200	12	13	4.42	4.72
1350	14	15	5.13	5.43
1500	15	16	5.49	5.79
CORRUGATED METAL PIPE (ARCH) ***				
450 x 340	1	2	0.51	0.81
510 x 380	2	3	0.86	1.16
680 x 500	4	5	1.57	1.87
910 x 660	5	6	1.93	2.23
1030 x 740	6	7	2.29	2.59
1150 x 820	7	8	2.64	2.94
1390 x 970	9	10	3.35	3.65
1600 x 1060	10	11	3.71	4.01
1880 x 1260	12	13	4.42	4.72

** To be used only when grates are called for in the plans.

*** 1974 AASHTO Pipe Arch Sizes.

Drain Size	s	n	L	La
ELLIPTICAL CONCRETE PIPE				
305 x 460	2	3	0.86	1.16
365 x 575	3	4	1.22	1.52
490 x 770	4	5	1.57	1.87
610 x 960	5	6	1.93	2.23
730 x 1150	7	8	2.64	2.94
855 x 1345	8	9	3.00	3.30
975 x 1535	10	11	3.71	4.01
1095 x 1730	11	12	4.06	4.36
1220 x 1920	13	14	4.78	5.08
1340 x 2110	14	15	5.13	5.43
1465 x 2305	15	16	5.49	5.79

** Note: 15 x 75 bolts are standard for all grate fasteners, except when the contractor elects to use the slotted upper holes for the intermediate fasteners on multiple drain pipe, which will require the following bolt lengths:

Grate Size (Std. & X-Stg.)	Bolt Length
65	140
75	150
90	165
100	180

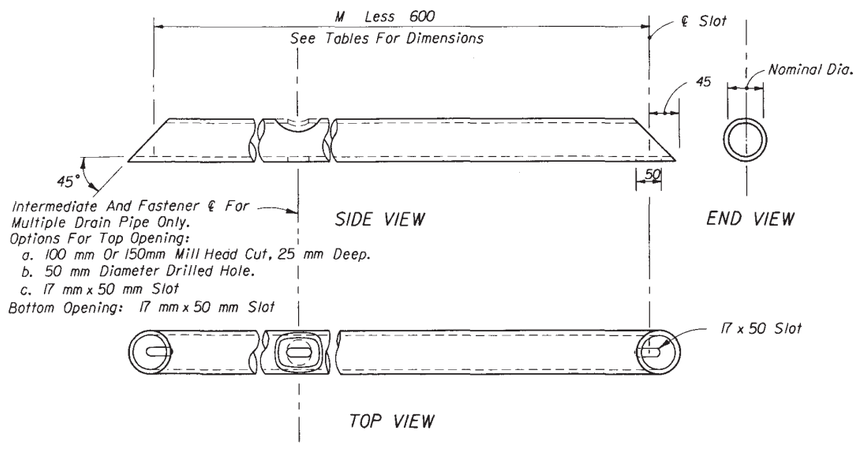

See General Notes, Sheet 6.

GRATE DETAIL

FOR SINGLE & MULTIPLE DRAIN PIPE

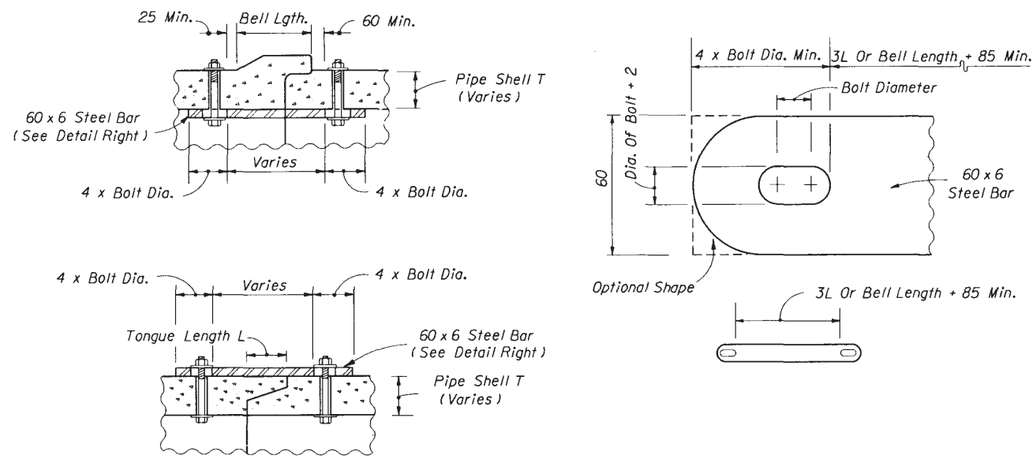

All bars, bolts, nuts and washers are to be galvanized steel.
Bolt diameters shall be 10 mm for 375 mm to 900 mm pipe and 15 mm for 1050 mm to 1500 mm pipe.
Two connectors required per joint, located 60° right and left of bottom center of pipe.
Bolt holes in pipe shell are to be drilled.

CONCRETE PIPE CONNECTOR DETAIL

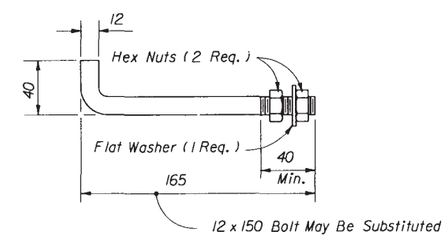

Anchors required for CMP only.
Anchor, washer and nuts to be galvanized steel.
Bend anchor where required to center in concrete slab. Damaged surfaces to be repaired after bending.
Anchors are to be spaced a distance equal to four (4) corrugations. Place the anchors in the outside crest of corrugation.
Flat washer to be placed on inside wall of pipe.

Holes in the mitered end pipe are to be drilled or punched; burning not permitted.

ANCHOR DETAIL

STATE OF FLORIDA DEPARTMENT OF TRANSPORTATION
ROAD DESIGN

SIDE DRAIN MITERED END SECTION

DETAILS FOR CONCRETE & CORRUGATED METAL PIPE

	Names	Dates
Designed By	EGR	08/77
Drawn By	HKH	08/77
Checked By	JVG	08/77
F.H.W.A. Approved:		10/21/77

Approved By S. A. McLemore
State Drainage Engineer

Revision No.	Sheet No.	Index No.
94	5 of 6	273

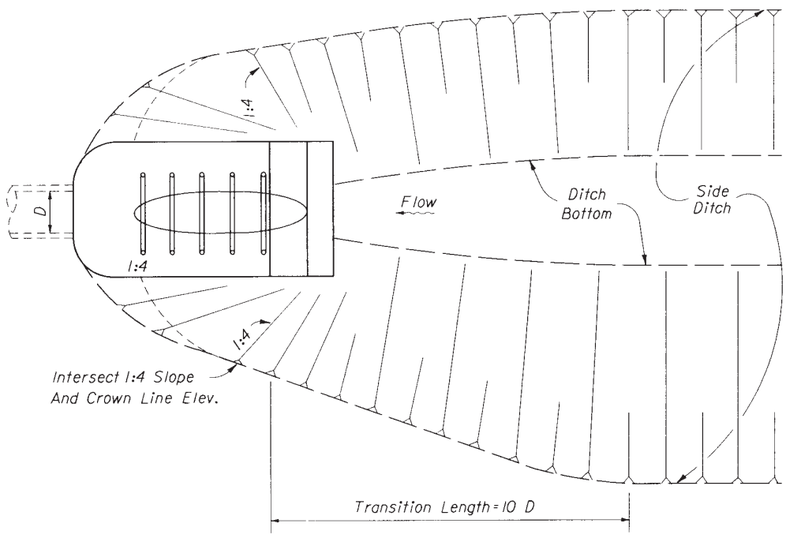

PLAN

DITCH TRANSITION

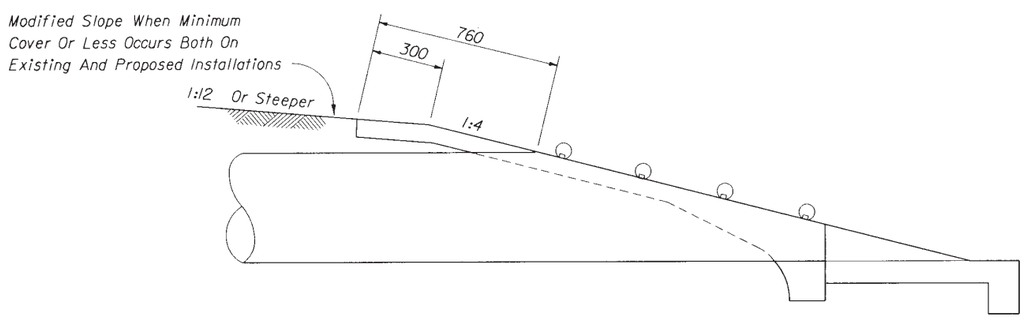

PERMISSIBLE PAVEMENT MODIFICATION

GENERAL NOTES

1. Unless otherwise designated in the plans, concrete pipe mitered end sections may be used with any type of side drain pipe; corrugated steel pipe mitered end sections may be used with any type of side drain pipe except aluminum pipe; and, corrugated aluminum mitered end sections may be used with any type of side drain pipe except steel pipe. When bituminous coated metal pipe is specified for side drain pipe, mitered end sections shall be constructed with like pipe or concrete pipe. When the mitered end section pipe is dissimilar to the side drain pipe, a concrete jacket shall be constructed in accordance with Index No. 280.
2. Concrete pipe used in the assembly of mitered end sections shall be of selective lengths to avoid excessive connections.
3. Corrugated metal pipe galvanizing that is damaged during beveling and perforating for mitered end section shall be repaired.
4. That portion of corrugated metal pipe in direct contact with the concrete slab shall be bituminous coated prior to placing of the concrete.
5. Corrugated polyethylene pipe (CPE) for side drain application of 375 mm, 450 mm or 600 mm diameter shall utilize either corrugated metal or concrete mitered end sections. When used in conjunction with corrugated metal mitered end sections, connection shall be by either a formed metal band specifically designated to join CPE pipe and metal pipe or other coupler approved by the State Drainage Engineer. When used in conjunction with a concrete mitered end section, connection shall be by concrete jacket constructed in accordance with Index No. 280.
6. When existing multiple side drain pipes are spaced other than the dimensions shown in this detail, or have non-parallel axes, or have non-uniform sections, the mitered end sections will be constructed either separately as single pipe mitered end sections or collectively as multiple pipe end sections as directed by the Engineer; however, mitered end sections will be paid for each, based on each independent pipe end.
7. In addition to the requirements of Section 430-4, side drain culverts shall comply with the cover requirements shown on Index No. 205.
8. The reinforced concrete slab shall be constructed for all sizes of side drain pipe and cast in place with Class I concrete.
9. Round pipe size 750 mm or greater, pipe-arch size 910 mm x 660 mm or greater and elliptical pipe 490 mm x 770 mm or greater shall be grated unless excepted in the plans. Smaller sizes of pipe shall be grated only when called for in plans. The lower grate on trailing downstream ends on divided highways shall be omitted.
10. Grates are to be fabricated from steel ASTM A 53, Grade B, pipe. The lower grate on all traffic approach ends shall be Schedule 80 and all remaining grates shall be Schedule 40.
    Grates subject to salt free and corrosive free environment may be fabricated from galvanized pipe, with base metal exposed during fabrication repaired as specified in Section 562, Standard Specifications; or, fabricated from black pipe and hot dipped galvanized after fabrication in accordance with ASTM A 123.
    Grates subject to salt water or highly corrosive environment shall be hot dipped galvanized after fabrication in accordance with ASTM A 123.
11. Ditch transitions shall be used on all grades in excess of 3% as directed by the Engineer.
12. The project engineer shall contact the District Drainage Engineer for possible alternate treatment prior to constructing side drain mitered end sections where a minimum spacing of 9.14 m will not result between the toe points of the mitered end sections.
13. The cost of all pipe (s), grates, fasteners, reinforcing, connectors, anchors, concrete, sealants, jackets and coupling bands shall be included in the cost for the mitered end section. Sodding shall be paid for separately under the contract unit price for Sodding, M2.
14. Mitered end sections shall be paid for under the contract unit price for Mitered End Section (SD), EA., based on each independent pipe end.

DESIGN NOTES

1. In critical hydraulic locations, grates shall not be used until potential debris transport has been evaluated by the drainage engineer and appropiate adjustments made. Ditch grades in excess of 3% or pipe with less than 450 mm of cover and grades in excess of 1% will require such an evaluation (General Note 9).
2. The design engineer shall determine highly corrosive locations and specify in the plans when the grates shall be hot-dipped galvanized after fabrication (General Note 10).
3. The design engineer shall determine and designate in the plans which alternate types of mitered end section will not be permitted. The restriction shall be based on corrosive or structural requirements.

STATE OF FLORIDA DEPARTMENT OF TRANSPORTATION
ROAD DESIGN

SIDE DRAIN MITERED END SECTION

NOTES & INFORMATION

	Names	Dates
Designed By	EGR	08/77
Drawn By	HKH	08/77
Checked By	JVK	08/77
F.H.W.A. Approved:		10/21/77

Approved By J A McLemore
State Drainage Engineer

Revision No.	Sheet No.	Index No.
94	6 of 6	273

SCHEDULE OF BELL REINFORCEMENT Classes II, III, IV, V; Wall A, B, C		
Nominal Pipe Diameter	Design Bell Reinforcement	Maximum Reinforcement Under Tolerance
	mm^2/m	mm^2/m
375	148	21
450	148	21
600	190	21
750	254	21
900	296	21
1050	338	21
1200	402	23
1350	444	25
1500	487	29
1650	550	32
1800	593	35
1950	635	38
2100	698	41
2250	741	44
2400	783	48
2550	847	51
2700	889	54

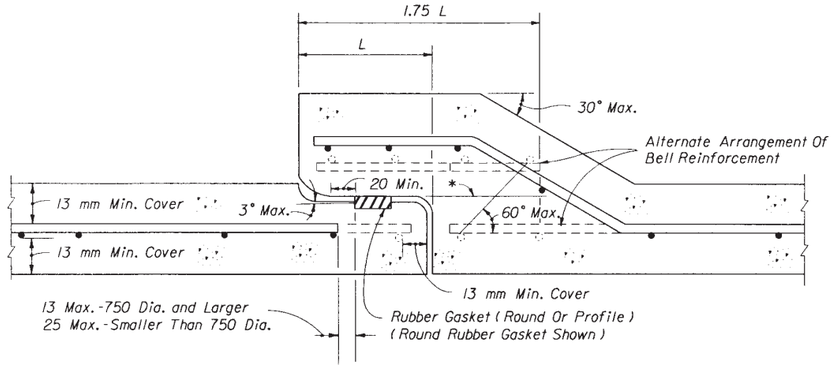

*All circumferential steel located above this line within 1.75 L is defined as bell reinforcement.

ROUND RUBBER GASKET SHOWN

DETAIL OF BELL & SPIGOT CONCRETE PIPE JOINT USING ROUND OR PROFILE RUBBER GASKET

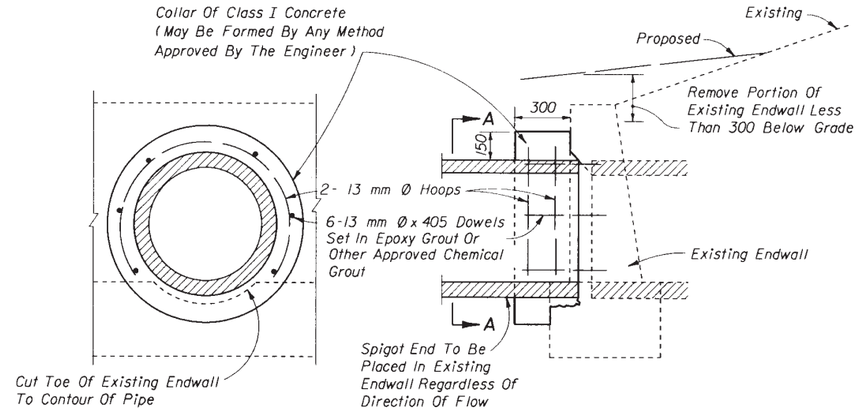

SECTION AA LONGITUDINAL SECTION

Note: Cost for removal and disposal of portions of top and toe of existing endwall and cost of concrete, reinforcing steel and construction of collar to be included in the contract unit price for pipe culvert.

CONCRETE COLLAR FOR EXTENSION OF EXISTING PIPE CULVERTS

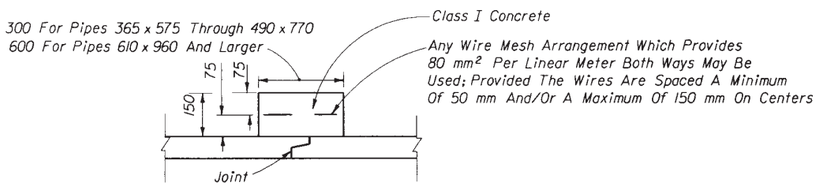

CONCRETE JACKET

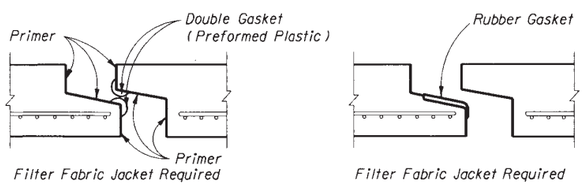

PREFORMED PLASTIC JOINT (BEFORE PULL-UP) PROFILE RUBBER GASKET (BEFORE PULL-UP)

Cost of concrete jacket or filter fabric jacket to be included in cost of elliptical concrete pipe culverts.

ELLIPTICAL CONCRETE PIPE JOINTS

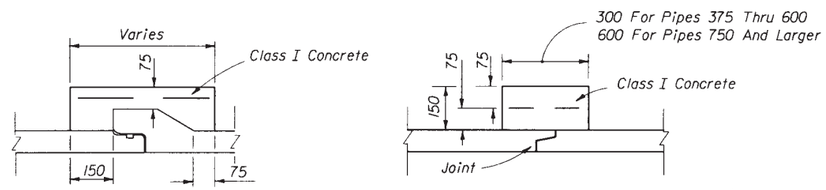

(All Pipe Sizes) BELL AND SPIGOT

Note: For reinforcement see ellipital pipe concrete jacket.

TONGUE & GROOVE

DISSIMILAR JOINTS

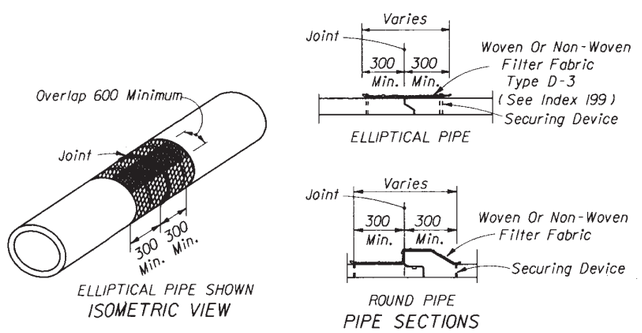

ELLIPTICAL PIPE SHOWN ISOMETRIC VIEW

ELLIPTICAL PIPE

ROUND PIPE PIPE SECTIONS

Cost of filter fabric jacket to be included in cost of pipe culverts.

FOR ALL PIPE TYPES - CONCRETE PIPE SHOWN

FILTER FABRIC JACKET

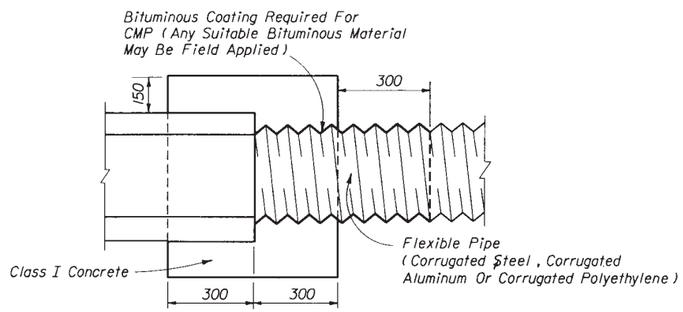

Note: Cost of concrete and bituminous coating to be included in contract unit price for either new pipe or Mitered End Section.
A concrete jacket shall not be used to join:
(a) metal pipe of dissimilar materials
(b) flexible pipe when the minimum cover required in accordance with Index No. 205 cannot be obtained.

DISSIMILAR TYPES

CONCRETE JACKET FOR CONNECTING DISSIMILAR TYPES OF PIPE AND CONCRETE PIPES WITH DISSIMILAR JOINTS

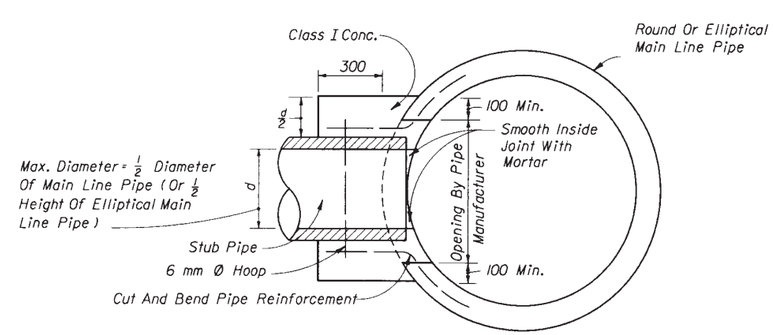

Cost of concrete and steel to be included in contract unit price for pipe culvert.

CONCRETE COLLAR FOR JOINING MAINLINE PIPE AND STUB PIPE

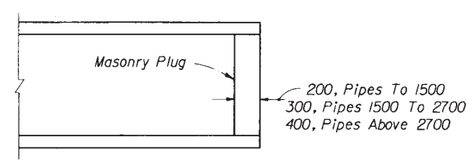

Note: Unless otherwise called for in the plans, the cost of plugging pipes to be included in contract unit price for new pipe.

PIPE PLUG

STATE OF FLORIDA DEPARTMENT OF TRANSPORTATION
ROAD DESIGN

MISCELLANEOUS DRAINAGE DETAILS

	Names	Dates
Designed By		
Drawn By	HSD	01/85
Checked By	JBW/JVG	09/85
F.H.W.A. Approved:		

Approved By S.A. McKenzie
State Drainage Engineer

Revision No.	Sheet No.	Index No.
94	1 of 4	280

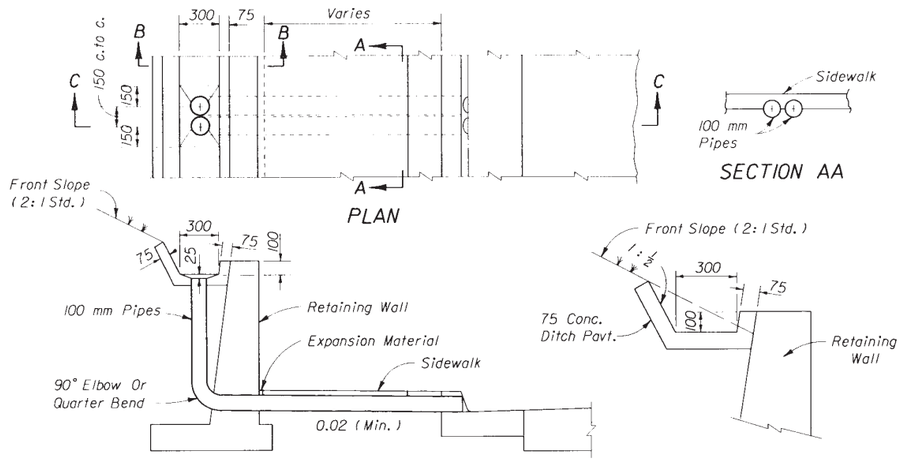

Note: Either cast iron pipe or PVC pipe, Schedule 40, may be used. Pipe to be paid for under the contract unit price for either Cast Iron Pipe For Roof Drains (100 mm), MI, or Polyvinyl Chloride Pipe Culvert (100 mm), MI.

CONCRETE GUTTER AND DRAINS AT RETAINING WALLS

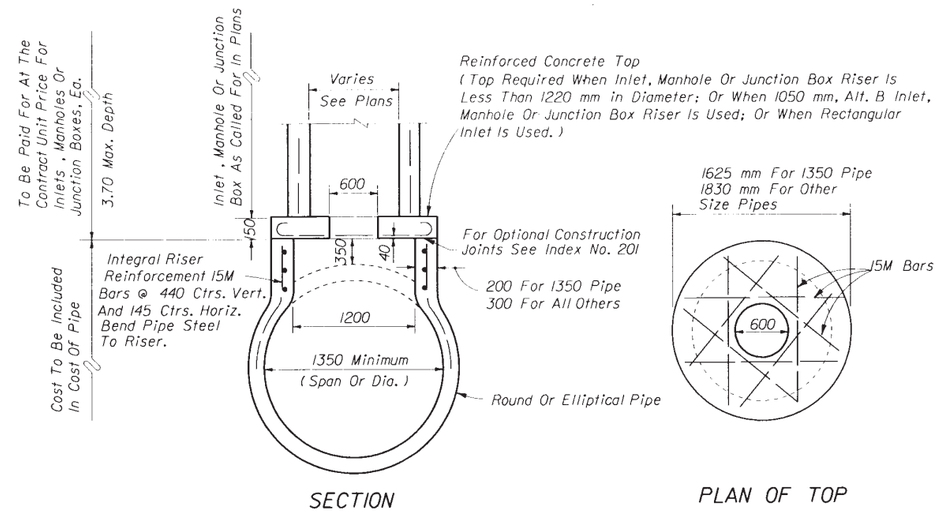

INLETS, MANHOLES OR JUNCTION BOXES ON INTEGRAL PRECAST CONCRETE RISER FOR CONCRETE PIPE

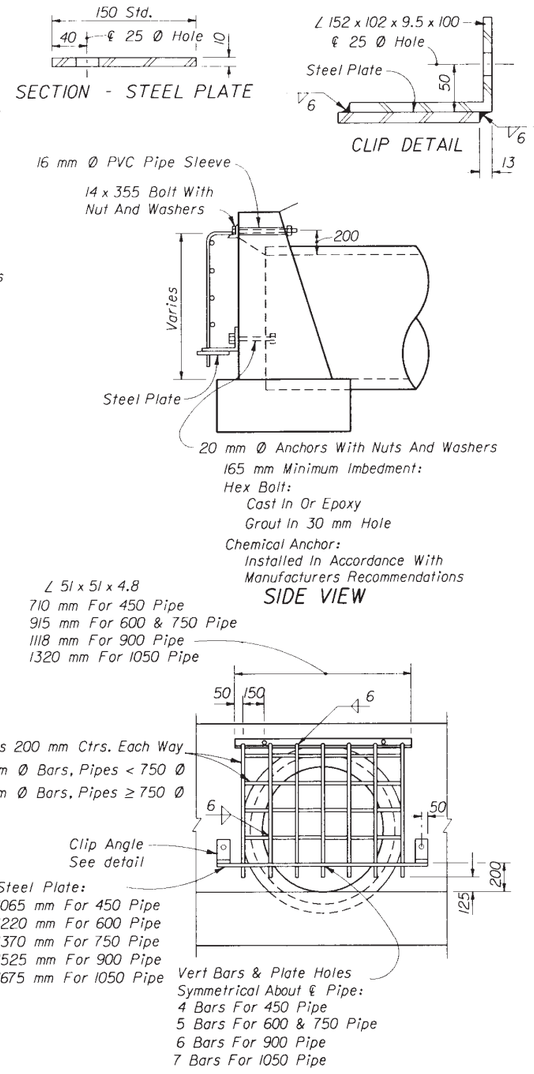

Pipe Dia.	450	600	750	900	1050
Grate (kg)	22	26	34	41	50

FRONT VIEW

Note: Guards to be constructed only at locations specifically called for in plans. Guard, plate & clips, bolts, nuts and sleeves to be included in the contract unit price for Endwall Grate, KG.

GUARD AT PIPE ENDS

RAILROAD COMPANY	CLEARANCE BELOW BOTTOM OF RAIL (mm)	STRENGTH ASTM (C76) CLASS
Apalachicola Northern	1200	IV
Atlanta And St. Andrews Bay	1200	IV
Florida East Coast	1650*	IV
Burlington Northern Railroad	S-TRK M/L 1350 1650	IV
CSX Transportation, Inc.	1650	IV
Southern Railway System		
Georgia Southern And Florida	1650	V
Live Oak Perry And South Georgia	1650	V
St. Johns River Terminal	1650	V

*Clearance is for casing pipe. All subgrade carrier pipelines and wirelines will be installed within a casing pipe which will extend from Right-of-Way line to Right-of-Way line.

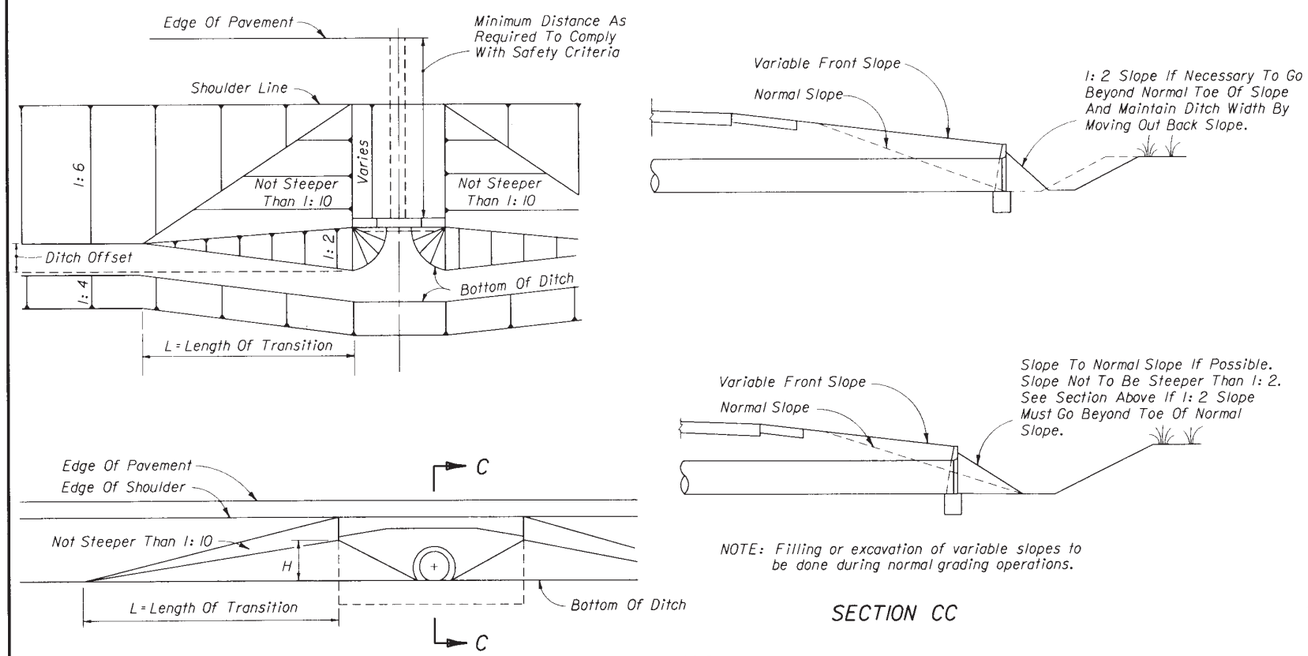

NOTE: Filling or excavation of variable slopes to be done during normal grading operations.

SECTION CC

Use Larger Value Of Either:
1. L = 10 x H (No Maximum)
2. L = 10 x Ditch Offset (Maximum L = 30.00)

METHOD FOR SETTING LIMITS OF VARIABLE FRONT SLOPES AT DRAINAGE STRUCTURES

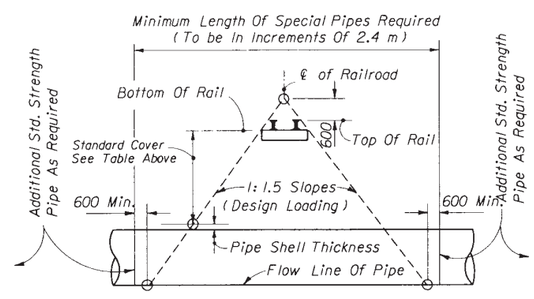

METHOD FOR DETERMINING THE LENGTH OF SPECIAL PIPE REQUIRED UNDER RAILROADS

STATE OF FLORIDA DEPARTMENT OF TRANSPORTATION
ROAD DESIGN

MISCELLANEOUS DRAINAGE DETAILS

	Names	Dates
Designed By		
Drawn By		
Checked By		
F.H.W.A. Approved: 11/16/78		

Approved By S.A. McLemore
State Drainage Engineer

Revision No.	Sheet No.	Index No.
94	2 of 4	280

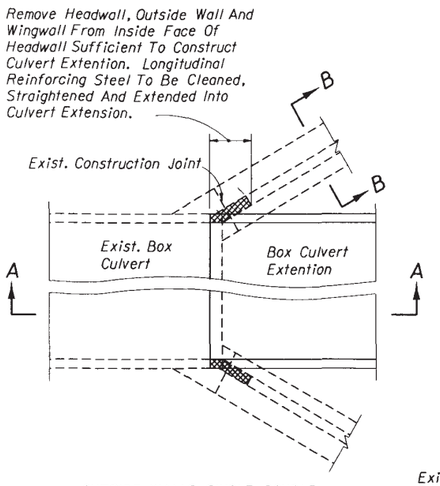

OUTSIDE WALLS-SINGLE, DOUBLE, TRIPLES, & QUADRUPLE BOXES

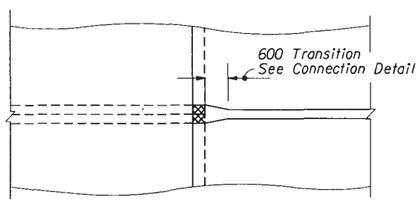

CENTER WALL- QUADRUPLE BOXES

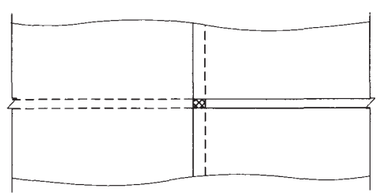

INTERIOR WALLS-DOUBLE & TRIPLE BOXES
INTERMEDIATE WALLS-QUADRUPLE BOXES

PLAN VIEWS

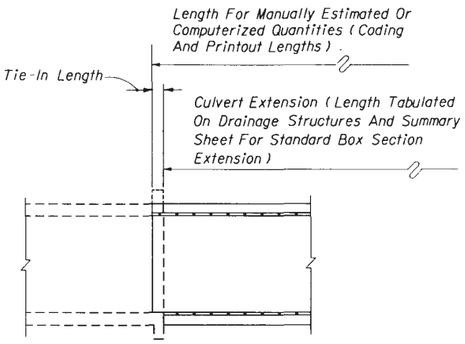

SECTION AA

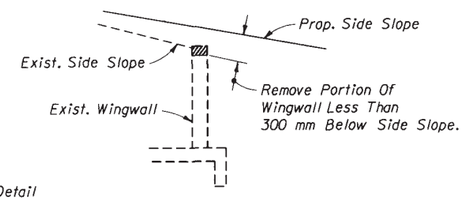

SECTION BB

FLARED ENDWALL

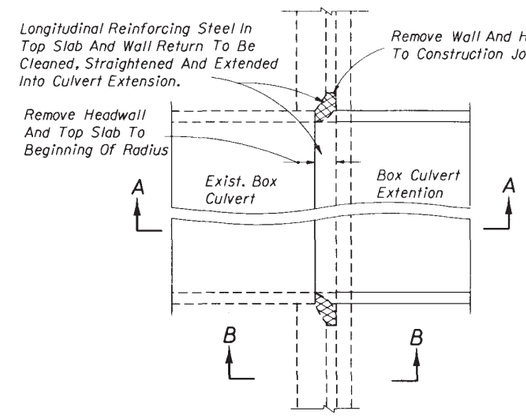

OUTSIDE WALLS-SINGLE, DOUBLE, TRIPLES, & QUADRUPLE BOXES

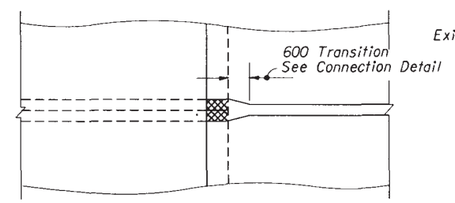

CENTER WALL- QUADRUPLE BOXES

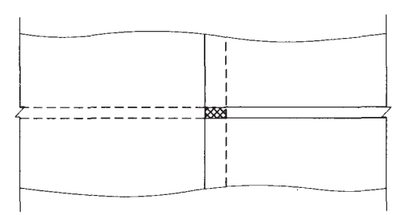

INTERIOR WALLS-DOUBLE & TRIPLE BOXES
INTERMEDIATE WALLS-QUADRUPLE BOXES

PLAN VIEWS

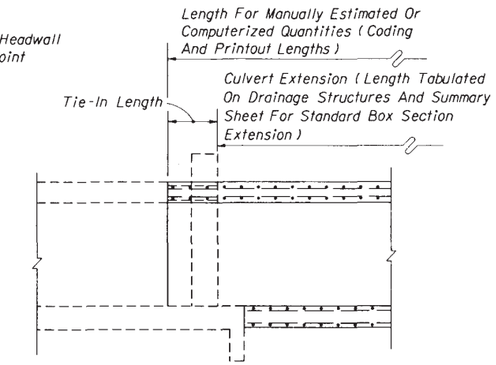

SECTION AA

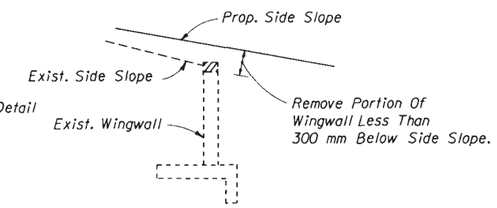

SECTION BB

STRAIGHT ENDWALL

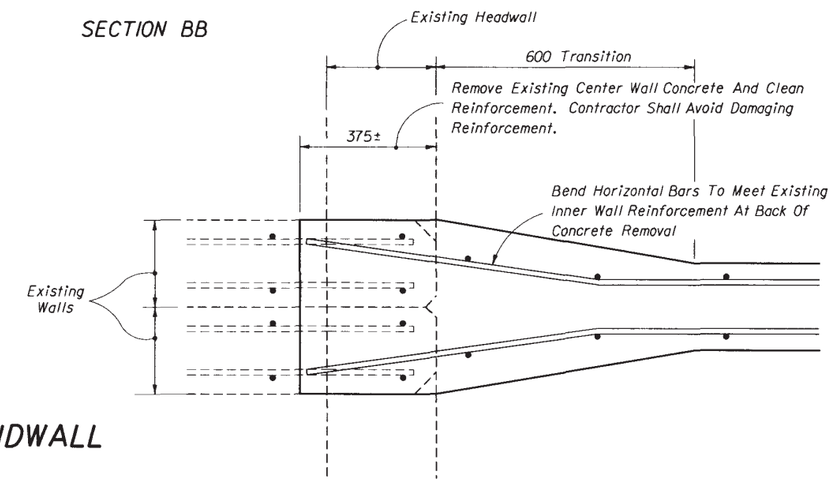

CONNECTION AT CENTER WALL OF QUADRUPLE CULVERTS

NOTE: The computerized printout for reinforcing steel does not include the additional lengths needed for extension and overlaps or connections to the horizontal reinforcement in the interior walls of double, triple and quadruple existing concrete box culverts; the cost for additional reinforcement and the thickened concrete wall in the transitional area shall be included in the costs for constructing the tie-in.

Cost for removal and disposal of material from existing headwalls, wingwalls and the top slab, and cost of cleaning, straightening and extending longitudinal reinforcing steel shall be included in the cost for concrete and steel of the culvert extension.

For concrete box culvert details, see Index No. 290.

CONNECTION DETAILS FOR CONCRETE BOX CULVERT EXTENSIONS

STATE OF FLORIDA DEPARTMENT OF TRANSPORTATION
ROAD DESIGN

MISCELLANEOUS DRAINAGE DETAILS

	Names	Dates	Approved By S. A. McLemore, State Drainage Engineer
Designed By			
Drawn By			
Checked By			
F.H.W.A. Approved:		11/16/78	

Revision No.	Sheet No.	Index No.
94	3 of 4	280

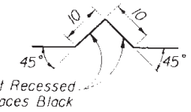

Black Plastic Figures 75 mm in height as approved by the Engineer may be used in liew of numbers formed by 10 mm "V" Grooves. "V" Grooves shall be formed by preformed figures.

SECTION THRU RECESSED "V" GROOVE TO FORM INSCRIBED FIGURES

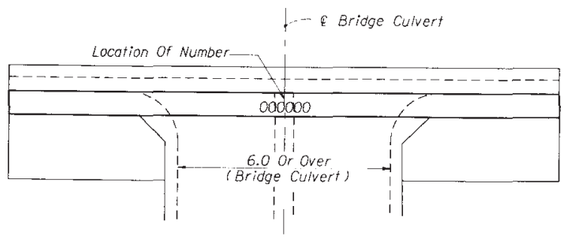

The number is to be placed in the center of the top surface of all bridge culvert headwalls.

For Bridge Number See Plan-Profile Sheet(s).

TOP VIEW OF HEADWALL

BRIDGE CULVERT NUMBER LOCATION

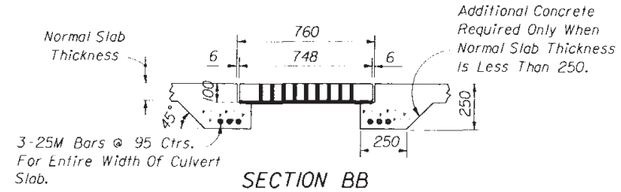

SECTION BB

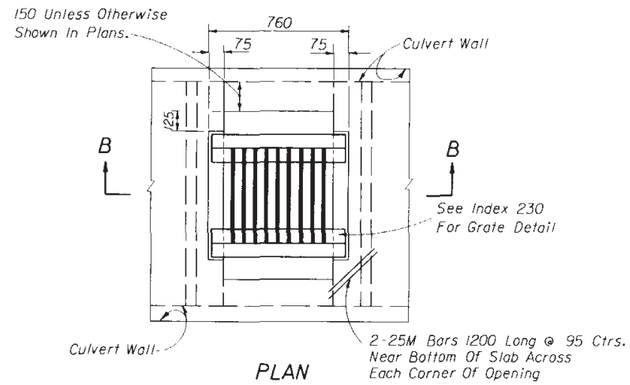

PLAN

INLET TYPE A GRATE

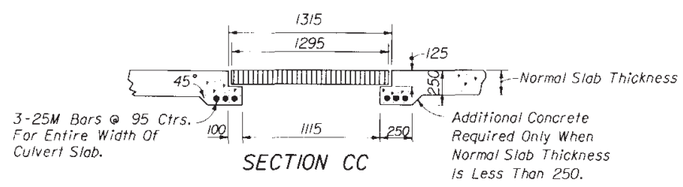

SECTION CC

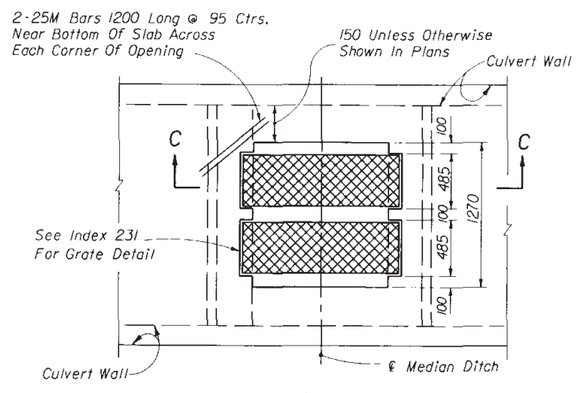

PLAN

INLET TYPE B GRATE

NOTE: 1. Cost of Steel Grating to be included in cost of Box Culvert.
2. All steel shall be 30 mm clear.

INLET IN TOP OF BOX CULVERT

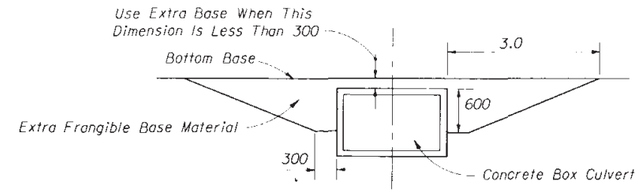

The cost of furnishing and installing extra frangible base material shall be included in the cost of the Box Culvert.

FRANGIBLE BASE

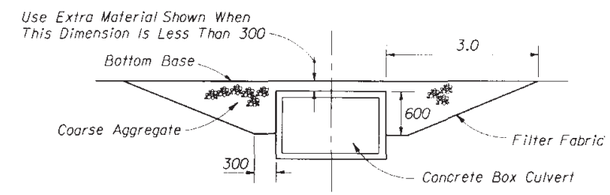

The Contractor shall furnish and install coarse aggregate on filter fabric. The coarse aggregate shall be placed in 150 mm lifts and compacted sufficiently as to be firm and unyielding. The coarse aggregate shall be gravel or stone meeting the requirements of Section 901-2 or 901-3 respectively. The gradation shall meet Section 901-6, Grades 4, 467, 5, 56 or 57 unless restricted in the plans. The filter fabric shall be Type D-3 (See Index 199). The cost of furnishing and installing the coarse aggregate and filter fabric shall be included in the cost of the Box Culvert.

ASPHALTIC CONCRETE BASE

NOTE: Extra base is required when cross box culverts are located on facilities subject to high speed traffic (>80 km/h) or high traffic volumes (>1600 ADT) and the cover is within the range specified in the notation above.

EXTRA BASE FOR CROSS BOX CULVERTS UNDER FLEXIBLE PAVEMENT

STATE OF FLORIDA DEPARTMENT OF TRANSPORTATION
ROAD DESIGN

MISCELLANEOUS DRAINAGE DETAILS

	Names	Dates
Designed By		
Drawn By		
Checked By		
F.H.W.A. Approved:		

Approved By S.A. McLemore
State Drainage Engineer

Revision No.	Sheet No.	Index No.
94	4 of 4	280

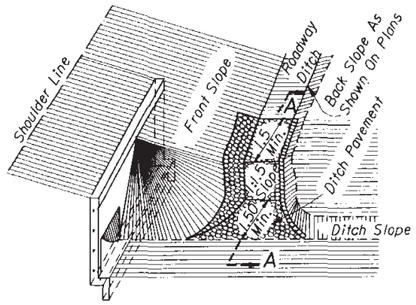

JUNCTION OF ROADWAY DITCH * AND LATERAL DITCH

* Soil cement or misc. asphalt will not be permitted for this type of construction

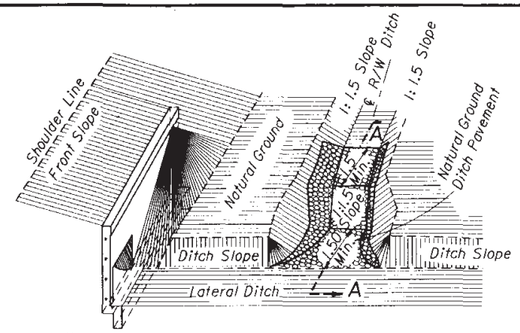

JUNCTION OF R/W DITCH * AND LATERAL DITCH

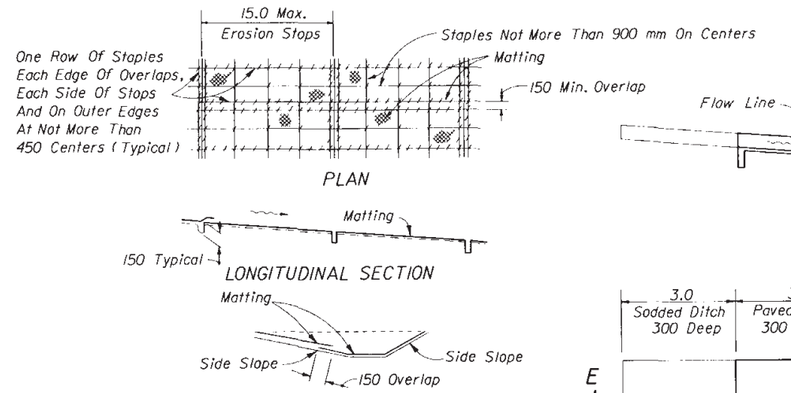

MATTING FOR DITCH

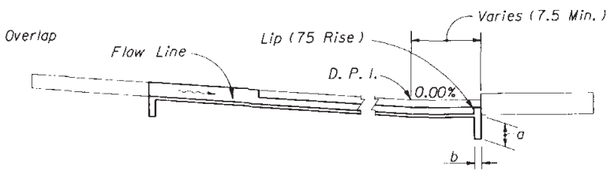

SECTION EE

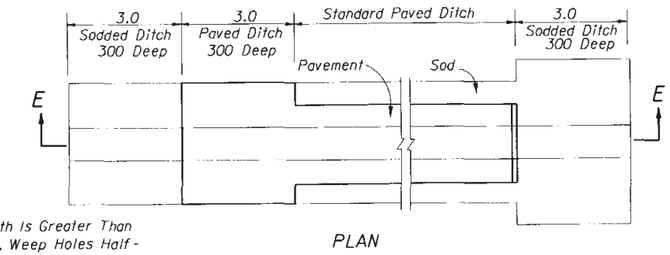

PLAN

PAVED DITCH END TREATMENT

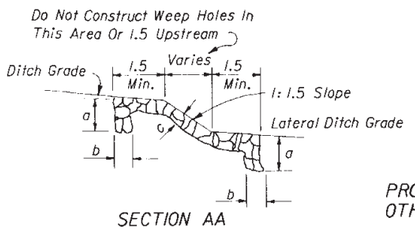

SECTION AA

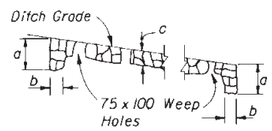

PROFILE OF DITCH PAV'T AT LOCATIONS OTHER THAN JUNCTION WITH LATERAL DITCH

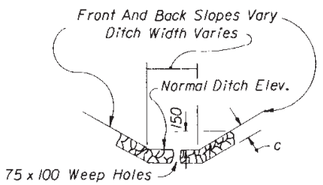

TYPICAL SECTION

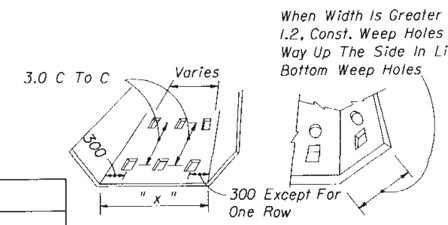

When "X" = 0.3 To <1.5 Const. 1 Row (Centered)
"X" = 1.5 To <2.4 Const. 2 Rows
"X" = 2.4 To <4.0 Const. 3 Rows
"X" = 4.0 To <5.5 Const. 4 Rows
"X" = 5.5 To 6.7 Const. 5 Rows

DITCH PAVEMENT

Pavement Type	Dimensions a	Dimensions b	Dimensions c	Payment Unit	Basis Of Estimate	Filter Fabric Type	Velocity Range	References & Remarks
Concrete	600	150	75	M2	m²	D-6	Low-High	Section 524 of the Standard Specifications.
Miscellaneous Asphalt	600	300	100	MT	217 kg/m²	None	Low-Moderate	Section 339.
Soil-Cement	600	300	100	M2	m²	None	Low	Section 170.
Riprap (Sand-Cement)	600	300	100	M3	0.10 m³/m²	D-4	Low-Moderate	Section 530. Grouting of joints required.
Riprap (Concrete Block)	390	190	190	M3	0.20 m³/m²	D-2	Low	Subsection 530.-2.2. Hole side up, closed staggered joints (no grout), swaled section only.
Riprap (Broken Concrete Or Stone) + Slurry	600	300	225	M2	m²	D-2	Moderate-High	Section 530 (Expanded).

Notes: All weep holes to be 75 x 100 rectangle or 100 or 125 dia. circular hole. 0.014 m³ (300 x 300 x 150) of No. 6 aggregate to be placed under each hole. 0.10 m² of galvanized wire mesh (6 mm openings) shall be placed between the aggregate and the concrete. Cost of holes, aggregate and wire mesh to be included in the cost of ditch pavement.

WEEP HOLE ARRANGEMENT

GENERAL NOTES

1. Type of ditch pavement shall be as shown on plans.
2. In concrete ditch pavement, contraction joints are to be spaced at 7.5 meters maximum intervals, or as directed by the Engineer. Contraction joints may be either formed (construction joint) or tooled. No open joints will be permitted.

   Expansion joints with 13 mm preformed joint filler shall be constructed at all inlets, endwalls, and at intervals of not more than 60.0 meters.
3. Lip at end of ditch pavement shall normally be located downstream of D.P.I. or on flatter grades where there is a decrease in ditch velocity.
4. Toewalls are to be used with all ditch paving. A toewall is not required adjacent to drainage structures.
5. When directed by the Engineer, weep hole spacing may be reduced to 1.5 meters minimum.
6. For junction of R/W ditch spillway and lateral ditch, sides of paving to be 300 mm high minimum.
7. For ditch pavements requiring filter fabric the fabric shall be placed directly beneath the pavement for the entire length and width of the pavement. When weep holes with aggregate are used the filter fabric shall be placed below the aggregate to form a mat continuous with or underlapping the pavement fabric. (See Index 199 for fabric type and application).
8. Cost of plastic filter fabric to be included in the contract unit price. for ditch pavement.

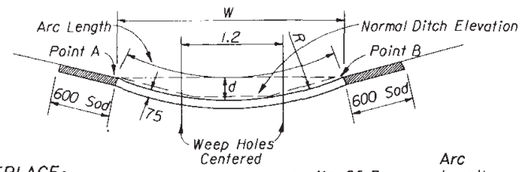

TO REPLACE:

	W (m)	d (mm)	R (m)	No. Of Rows Of Weep Holes	Arc Length (m)
1.8 Median Swale	1.8	70	5.8	0	1.81
1:6 Front Slopes; 1:4 Back Slope					
1.5 B.W. Ditch	3.0	200	5.8	2	3.03
1.2 B.W. Ditch	2.7	160	5.8	2	2.72
1:4 Front Slopes & Back Slope					
1.5 B.W. Ditch	2.7	220	4.25	2	2.75
1.2 B.W. Ditch	2.4	175	4.25	1 (in center)	2.43

ALTERNATE DITCH PAVEMENT

For use only where side slopes are 1:4 or flatter. Point "A" and "B" are to be the same elevation and should be used to locate the paved section.

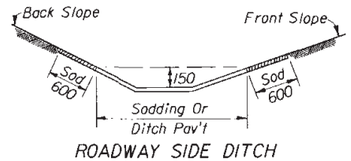

ROADWAY SIDE DITCH

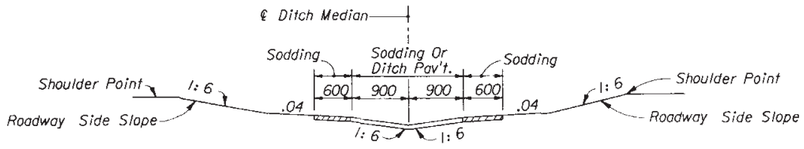

SWALED MEDIAN (No Weep Holes)

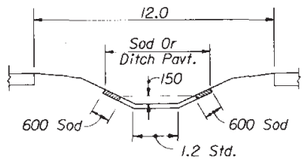

12.0 MEDIAN

STATE OF FLORIDA DEPARTMENT OF TRANSPORTATION
ROAD DESIGN

DITCH PAVEMENT & SODDING

	Names	Dates
Designed By		
Drawn By		
Checked By		

Approved By: S. A. McLemore, State Drainage Engineer

Revision No.	Sheet No.	Index No.
94	1 of 2	281

F.H.W.A. Approved: 05/01/75

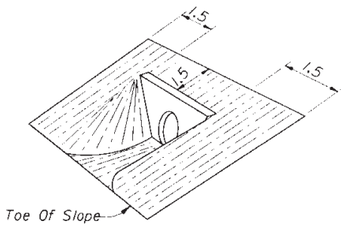

Note: Sodding quantities for each endwall to be determined by the designer from this detail.

(EXCEPT INDEX 250)
STRAIGHT ENDWALL

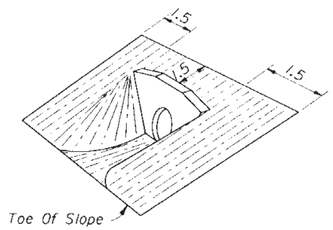

STRAIGHT ENDWALL
INDEX 250

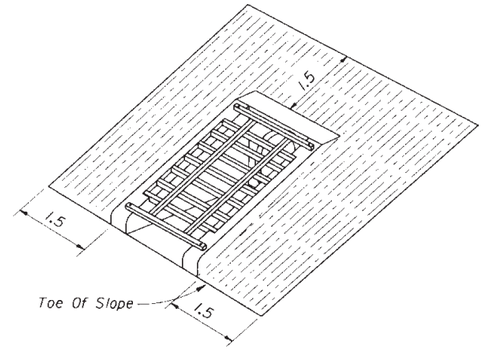

U - TYPE ENDWALL
INDEX 261

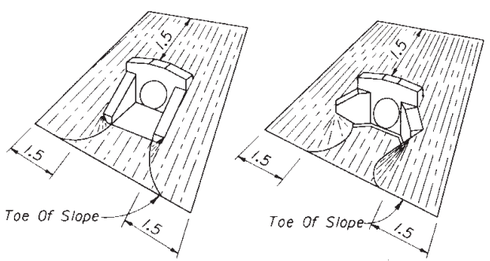

U - TYPE WINGS 45° WINGS

WINGED ENDWALLS
INDEX 266

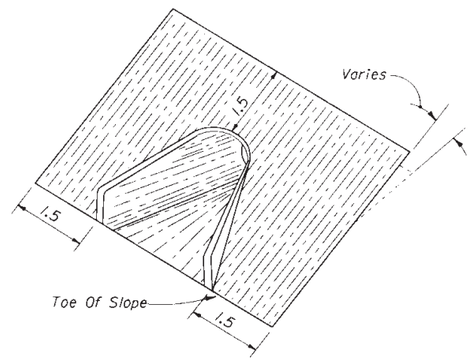

FLARED END SECTION
INDEX 270

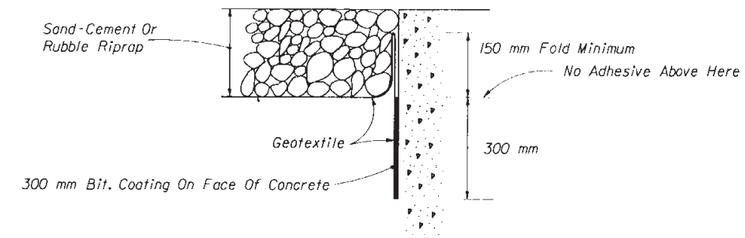

BONDED OPTION

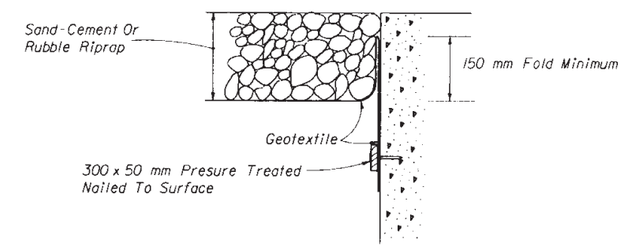

NAILED OPTION

Note: Either option may be used unless otherwise called for in the plans.

GEOTEXTILE PLACEMENT AT CONCRETE STRUCTURE

SODDING QUANTITIES (m^2)

PIPE SIZE	INDEX 250												INDEX 261				INDEX 266				INDEX 270
	SLOPE												SLOPE				SLOPE				ALL SLOPES
	1:2			1:3			1:4			1:6			1:2	1:3	1:4	1:6	1:2	1:3	1:4	1:6	
	PIPES												PIPES				PIPES				PIPES
	1	2	3	1	2	3	1	2	3	1	2	3	1	1	1	1	1	1	1	1	1
300																	12	13	15	19	9
375	16	18	20	19	22	25	22	25	28	29	32	36	11 (13)	14	15	20	13	15	17	21	10
450	18	20	23	21	25	28	25	29	32	33	37	42	12 (14)	15	16	21	14	15	19	24	10
525																					10
600	22	25	29	27	31	36	32	37	42	42	49	56	13 (15)	16	18	24	16	19	22	29	12
675																					13
750	26	31	36	33	39	45	39	46	53	52	62	71	15 (15)	18	20	27	18	21	25	34	14
900	31	37	44	39	47	55	47	56	66	64	76	90					20	25	30	40	15
1050	36	45	52	46	56	66	56	69	81	76	93	111					23	27	33	46	16
1200	42	52	61	54	66	78	66	82	97	91	112	133					25	30	37	51	18
1350	48	60	71	62	77	92	76	95	114	106	132	158									18
1500																					19
1650																					21
1800																					22
													( ) Endwall With Baffles								

SODDING

STATE OF FLORIDA DEPARTMENT OF TRANSPORTATION
ROAD DESIGN

DITCH PAVEMENT & SODDING

	Names	Dates
Designed By		
Drawn By	HSD	08/85
Checked By	JBW/JVG	09/85
F.H.W.A. Approved:		07/07/75

Approved By
State Drainage Engineer

Revision No.	Sheet No.	Index No.
94	2 of 2	281

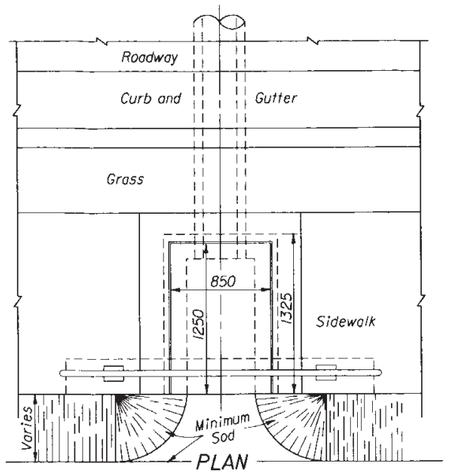

PLAN

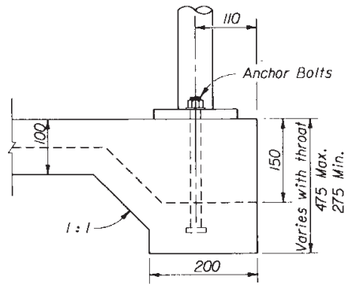

SECTION BB

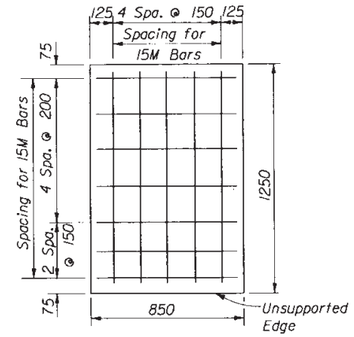

SLAB REINFORCEMENT

SLAB SECTION

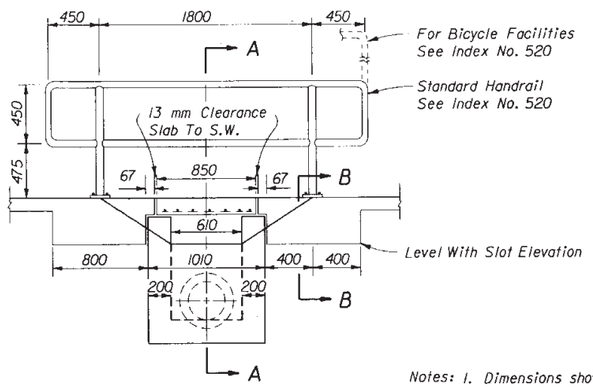

FRONT ELEVATION

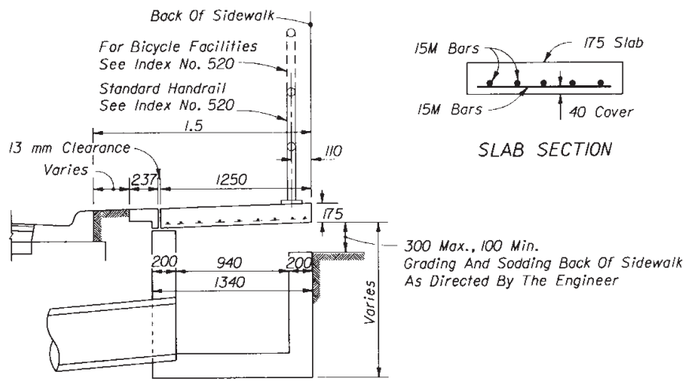

SECTION AA

Notes: 1. Dimensions shown are for a 1.5 sidewalk with utility strip.
2. For additional details see Index No. 232.
3. Inlet to be paid for under the contract unit price for Inlets (Ditch Bottom Type C Modified), EA. Handrail to be paid for under the contract unit price for Pipe Handrail, (Material), Ml.

INLET TYPE C (MODIFIED)

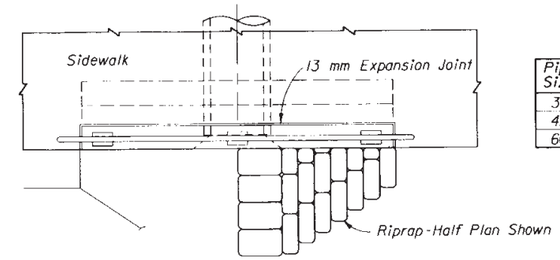

PLAN

Pipe Size	C	Conc.-m³	Riprap-m³ (Sand-Cement)
375	1450	1.74	0.84
450	1600	1.98	1.00
600	1905	2.49	1.38

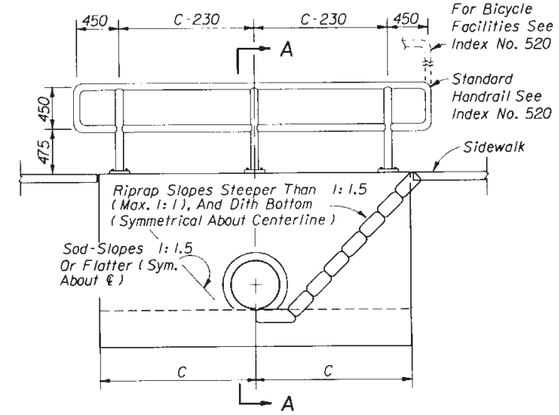

FRONT ELEVATION

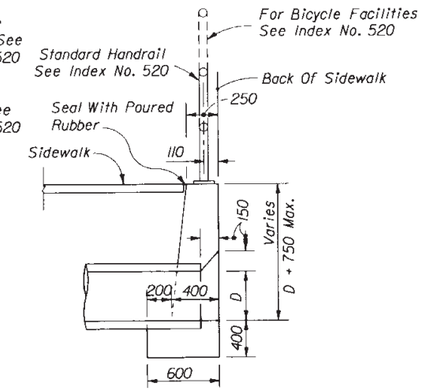

SECTION AA

Notes: 1. Maximum pipe size shall be 600 mm diameter.
2. Grading back of sidewalk varies and shall be done as directed by the Engineer.
3. Concrete quantities shown are for maximum wall heights, and shall be basis for estimate and payment.
4. Riprap quantities shown are for estimate purposes only. Cost of riprap to be included in cost of the endwall.
5. Endwalls to be paid for under the contract unit price for Conc. Class I (Endwalls), M3. Handrail to be paid for under the contract unit price for Pipe Handrail, (Material), Ml.

SPECIAL CONCRETE ENDWALL

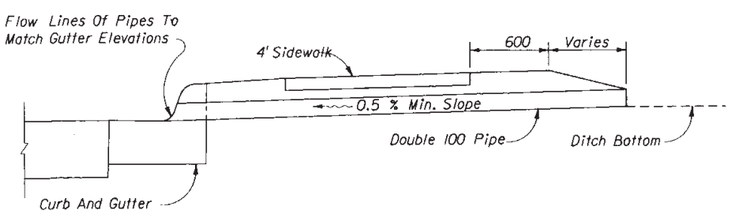

Notes: 1. To be constructed at locations as directed by the Engineer.
2. Either cast iron pipe or PVC rigid conduit, U.L. listed for direct sunlight exposure, Schedule 40, may be used.
3. Pipe to be paid for under the contract unit price for either Cast Iron Soil Pipe (Standard) (100 mm), Ml or Polyvinyl Chloride Pipe Culvert (100 mm), Ml.

SHALLOW DITCHES

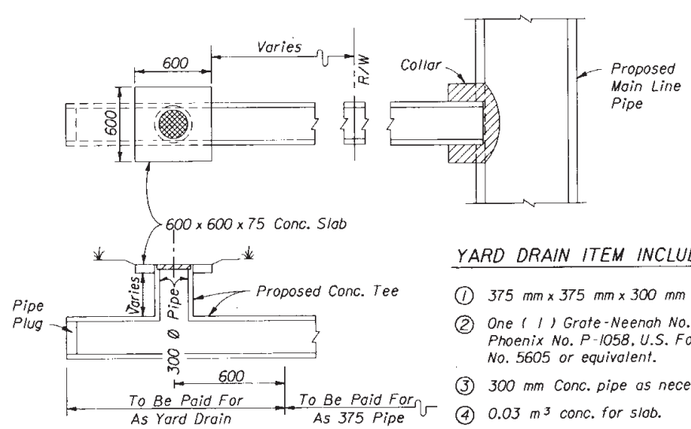

YARD DRAIN ITEM INCLUDES :

1. 375 mm x 375 mm x 300 mm Conc. Tee 1220 mm long.
2. One (1) Grate-Neenah No. R-4030, Phoenix No. P-1058, U.S. Foundry No. 5605 or equivalent.
3. 300 mm Conc. pipe as necessary.
4. 0.03 m³ conc. for slab.

Notes: 1. Yard drains to be located outside the R/W. Drainage area should not exceed 70 m² (grate flow 0.003 m³/s).
2. Yard drains may be constructed at the option of the property owner as shown on the plans.
3. Cost of plugs and collars to be included in the cost for 375 mm concrete pipe. For collar and plug details see Index No. 280.
4. Yard drains to be paid for under the contract unit price for Yard Drains, Each.

YARD DRAINS

STATE OF FLORIDA DEPARTMENT OF TRANSPORTATION
ROAD DESIGN

BACK OF SIDEWALK DRAINAGE

	Names	Dates			
Designed By			Approved By		
Drawn By			State Drainage Engineer		
Checked By			Revision No.	Sheet No.	Index No.
F.H.W.A. Approved:		05/01/75	94	1 of 1	282

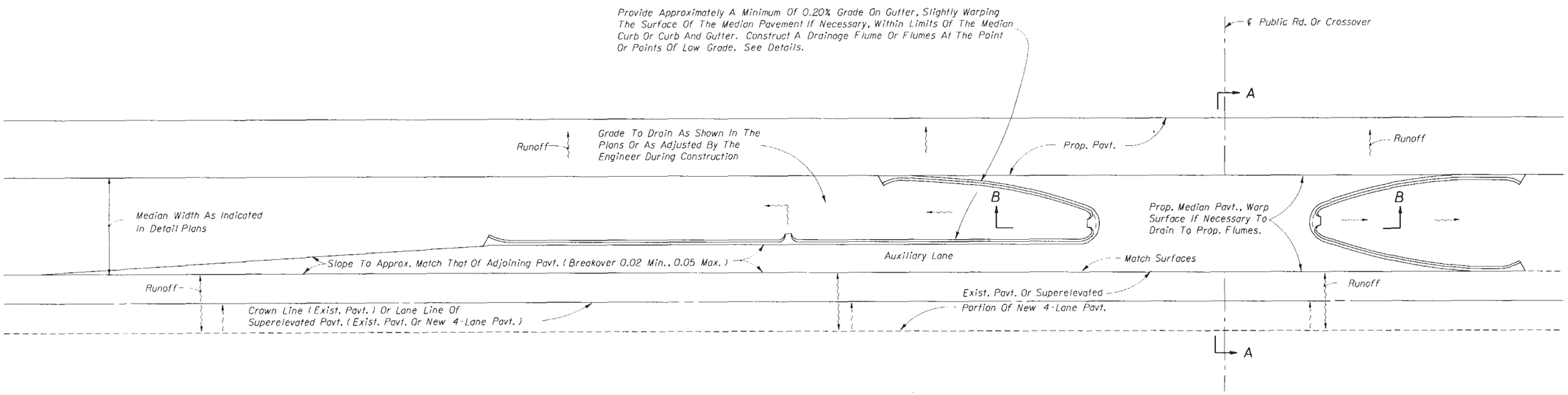

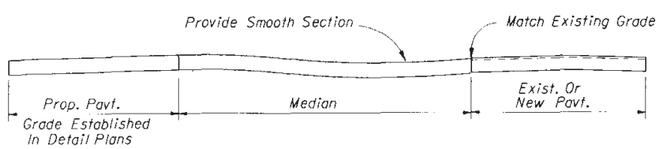

SECTION AA

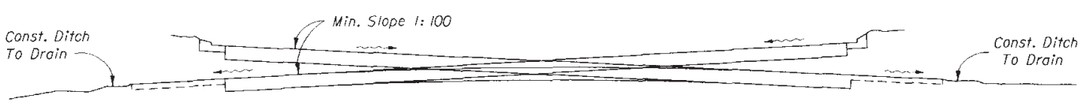

SECTION BB

(May Drain From Any Point Designated In the Plans Or As Adjusted By The Engineer During Construction)

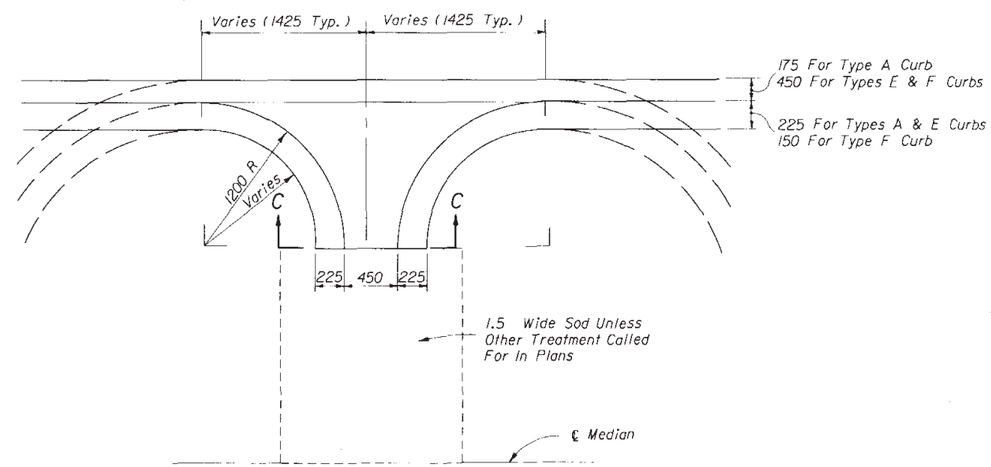

FLUME DETAIL

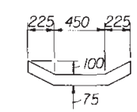

SECTION CC

GENERAL NOTES

1. These details are to apply to projects which provide for the conversion of 2-lane sections to 4-lane divided highway sections and for superelevated sections of new 4-lane divided highways. Layout above is illustration only. Cost of flumes to be included in the contract price for Curb or Curb and Gutter. Sod to be paid for under the contract unit price for Sodding, M2.

2. Flumes to be located in low point of noses and at other points as designated in the plans. The locations may be adjusted by the Engineer during construction.

STATE OF FLORIDA DEPARTMENT OF TRANSPORTATION
ROAD DESIGN

MEDIAN OPENING FLUME

	Names	Dates
Designed By	CHR	03/59
Drawn By		
Checked By	CDD	03/59
F.H.W.A. Approved:		03/20/75

Approved By L.A. McLemore
State Design Engineer, Roadways

Revision No.	Sheet No.	Index No.
94	1 of 1	283

SECTION AA

Note: Set reflector plates on right hand curb at bridge ends as shown. Plates to be furnished by D.O.T. and installed by the contractor. Cost of installing plates to be included in the contract unit price for concrete ditch pavement (75 mm thick).

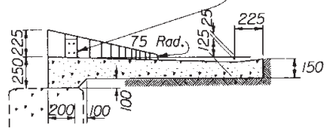

SECTION BB

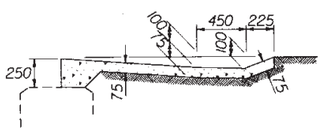

SECTION CC

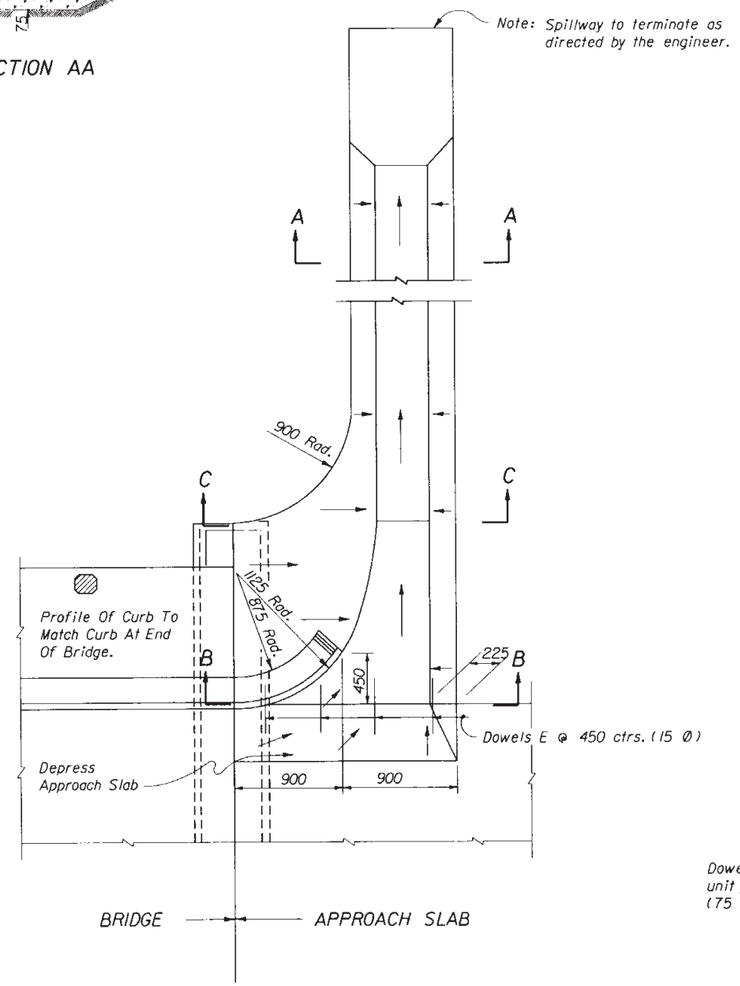

PLAN

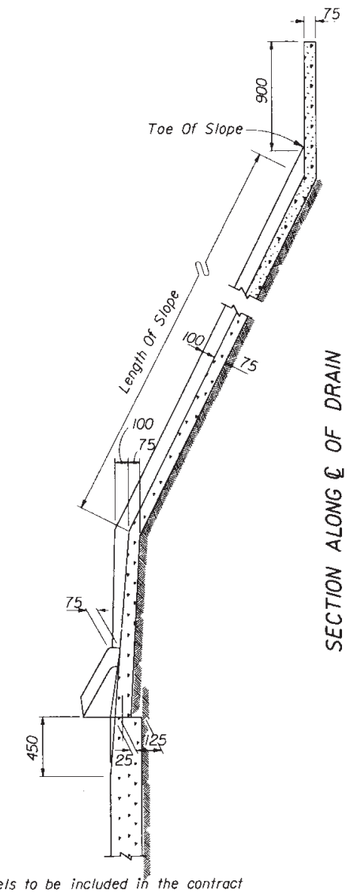

SECTION ALONG ℄ OF DRAIN

Dowels to be included in the contract unit price for concrete ditch pavement (75 mm thick).

GENERAL NOTES

1. This detail not recommended for grades greater than 0.5% or discharges exceeding 0.85 m^3m.

ESTIMATED QUANTITIES		
ITEM	UNIT	QUANTITY
Concrete Ditch Pavement (75 mm Thick)	m^2	* 9.09

* Quantity shown above includes pavement for 3.0 m "Length of Slope". For each additional meter of slope length add 0.96 m^2.

STATE OF FLORIDA DEPARTMENT OF TRANSPORTATION
ROAD DESIGN

CONCRETE SPILLWAYS
BRIDGE END SPILLWAY

	Names	Dates
Designed By	CES	12/51
Drawn By		
Checked By	HLF	12/51
F.H.W.A. Approved:		03/20/75

Approved By: State Drainage Engineer

Revision No.	Sheet No.	Index No.
94	1 of 2	284

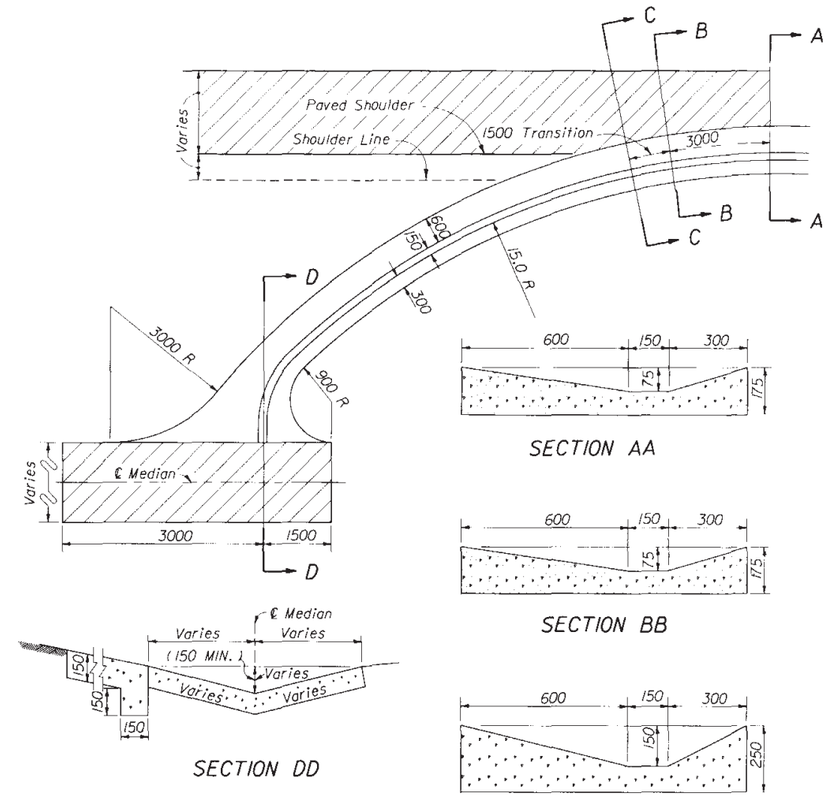

1. Spillway to be paid for as shoulder gutter.
2. If spillway empties into a shallow or median ditch, the detail should be modified as necessary.

DETAIL OF CONC. SPILLWAY AT END OF SHOULDER GUTTER

(TO BE USED WHERE INLETS, PIPES & ENDWALLS ARE IMPRACTICAL)

STATE OF FLORIDA DEPARTMENT OF TRANSPORTATION
ROAD DESIGN

CONCRETE SPILLWAYS
SHOULDER GUTTER SPILLWAY

	Names	Dates	Approved By
Designed By			S.A. McLemore, State Drainage Engineer
Drawn By			
Checked By			
F.H.W.A. Approved:		11/16/78	

Revision No.	Sheet No.	Index No.
94	2 of 2	284

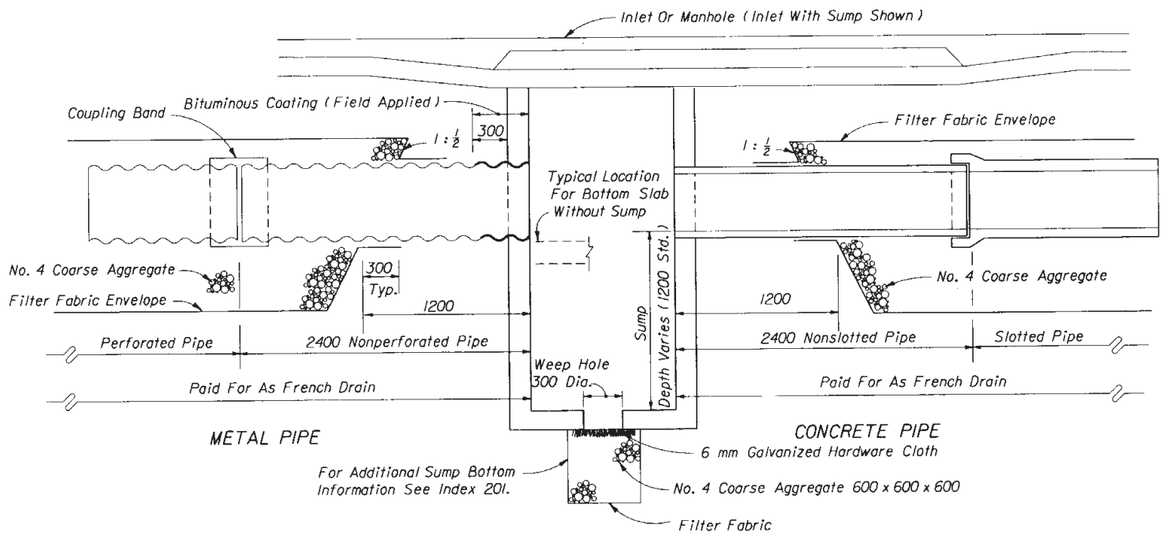

LONGITUDINAL SECTION

GENERAL NOTES

1. Pipe shall be any of the optional types permitted in Section 443 of the Specifications unless otherwise restricted in the plans. Dissimilar types of pipe will not be permitted in a continuous run of pipe.
2. Concrete pipe shall be placed with the slots positioned on sides.
3. Alignment joints are standard (gaskets not required). Recorrugation of metal pipe ends not required.
4. The contractor may submit other methods of providing slots having equal or greater area of opening, for approval by the Engineer.
5. Filter fabric shall be Subsurface Drainage type meeting the requirements of Section 985. All filter fabric joints shall lap a minimum of 300 millimeters.
6. The standard cross section shall be constructed unless other section(s) described or detailed in the plans.
7. For supplemental details see Index No. 280.
8. The contractor shall take the necessary precautions to prevent contamination of the trench with sand, silt and foreign materials.
9. The 300 mm diameter weep hole shall be eliminated, when the bottom of the inlet is below the normal water table, unless otherwise shown in the plans.
10. French drains following the typical cross section shall be paid for under the contract unit price for French Drains, Ml. The unit price shall include the cost of pipe, pipe plugs, pipe fittings, coarse aggregate and filter fabric in place, and the cost for trench excavation, backfill and compaction. The unit price shall also include the cost for disposal of surplus excavated materials and cost for restoration of pavement removed or damaged by french drain construction, but shall not include payments for items paid for elsewhere.

    French drains with a significantly different cross section shall be paid for under the contract unit prices for separate items as follows:

    (a) Slotted or Perforated Pipe Culvert, Ml. Unit price shall include cost for pipe, pipe plugs and fittings in place.

    (b) Ballast Rock (French Drain Aggregate), M3. Unit price shall include cost for coarse aggregate in place, and cost for trench excavation, backfill and compaction. The unit price shall also include the cost for disposal of surplus excavated materials and cost for restoration of pavement removed or damaged by french drain construction, but shall not include payment for items paid for elsewhere.

    (c) Plastic Filter Fabric (Subsurface), M2. Unit price shall be for cost of fabric in place. Quantity shall be determined by plan neat dimensions of the fabric envelope.

DESIGN NOTES

1. Pipe invert should be at or above the water table whenever possible.
2. French drains with minor dimensional changes or otherwise different from the standard cross-section shall be either described or detailed in the plans.

   French drains with significantly different cross-sections shall be detailed in the plans.

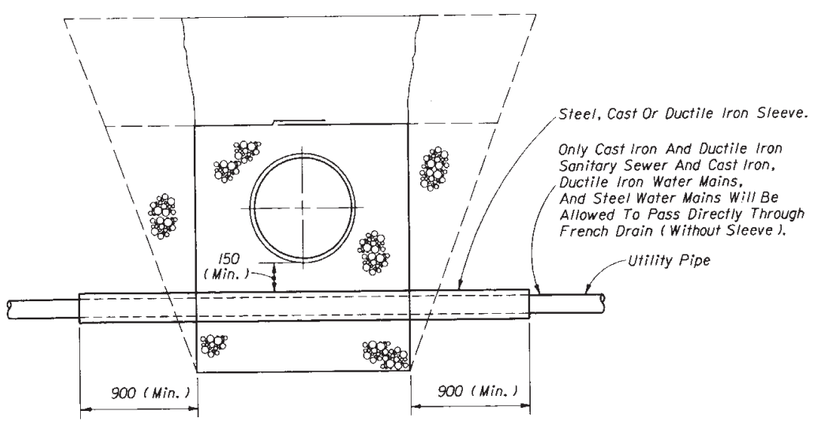

ROUND PIPE SHOWN

UTILIITY PIPES THRU FRENCH DRAIN

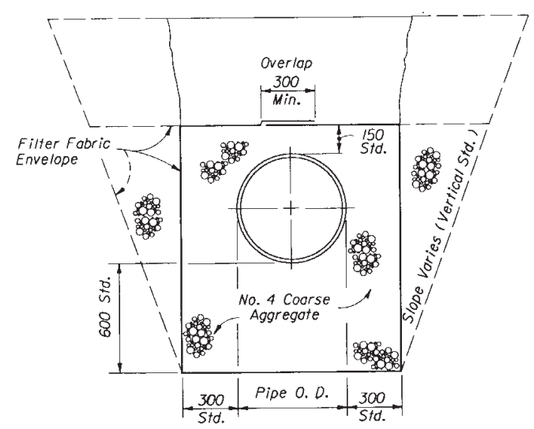

ROUND PIPE SHOWN

STANDARD CROSS SECTION (ENLARGED)

FRENCH DRAIN SYSTEM

STATE OF FLORIDA DEPARTMENT OF TRANSPORTATION
ROAD DESIGN

FRENCH DRAIN

	Names	Dates
Designed By	MPS	09/83
Drawn By	RWR	09/83
Checked By	EGR	09/83
F.H.W.A. Approved:		10/06/83

Approved By S.A. McLemore
State Drainage Engineer

Revision No.	Sheet No.	Index No.
94	1 of 2	285

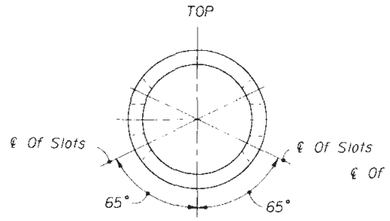

375-750

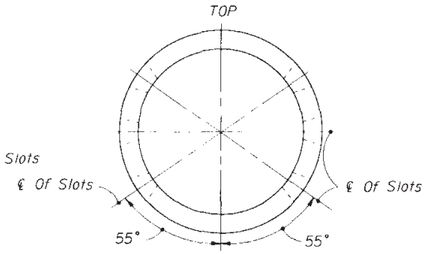

900-1800

ELLIPTICAL PIPE		
Pipe Size	Slot Cut Opening c	
	Min.	Max.
365 x 575	250	300
490 x 770	350	400
610 x 960	350	400
730 x 1150	500	550
855 x 1345	500	550
975 x 1535	500	550

ROUND PIPE		
Pipe Size	Slot Cut Opening c	
	Min.	Max.
375	300	350
450	300	350
600	400	450
750	400	450
900	550	600
1050	550	600
1200	550	600
1350	600	650
1500	600	650
1650	600	650
1800	600	650

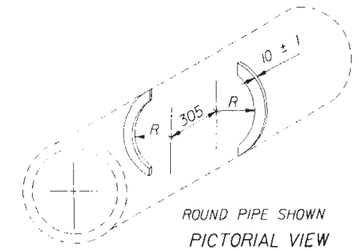

ROUND PIPE SHOWN

PICTORIAL VIEW

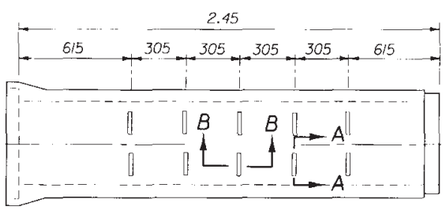

SIDE VIEW

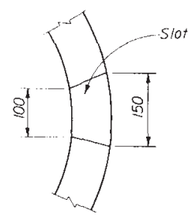

SECTION AA

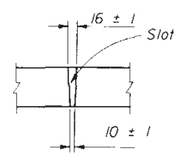

SECTION BB

OPTION A - ROUND PIPE

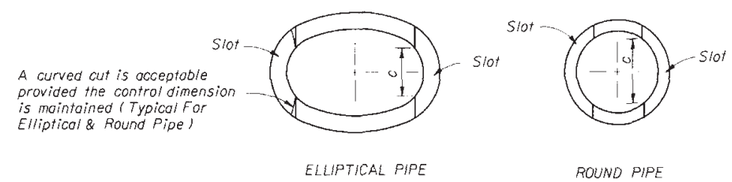

ELLIPTICAL PIPE

ROUND PIPE

SECTION AA

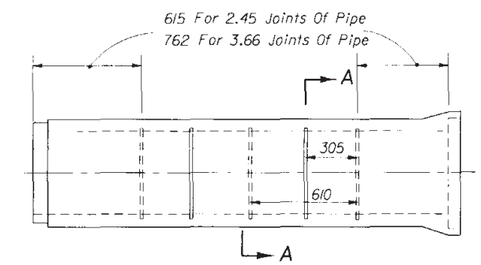

SIDE VIEW

OPTION B - ROUND OR ELLIPTICAL PIPE

SLOTTED PIPE OPTIONS

STATE OF FLORIDA DEPARTMENT OF TRANSPORTATION
ROAD DESIGN

FRENCH DRAIN

	Names	Dates
Designed By		
Drawn By		
Checked By		
F.H.W.A. Approved:		

Approved By S.A. McLemore
State Drainage Engineer

Revision No.	Sheet No.	Index No.
94	2 of 2	285

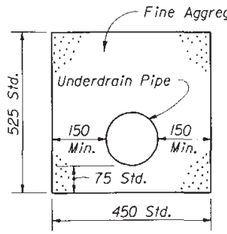

TYPE I

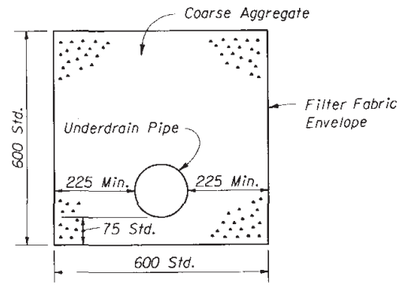

TYPE II

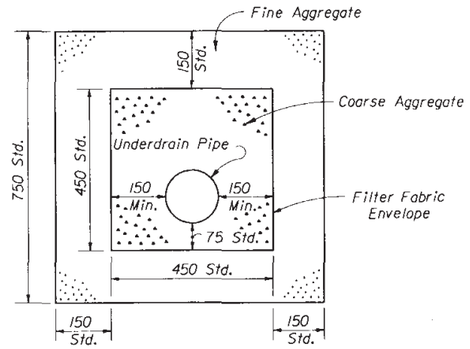

TYPE III

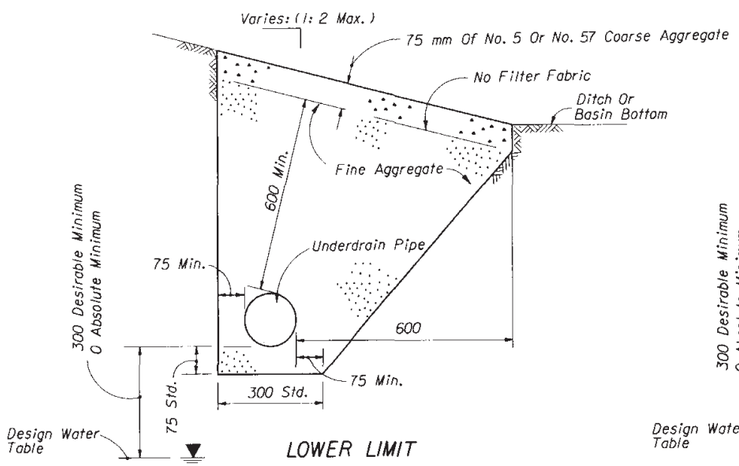

LOWER LIMIT

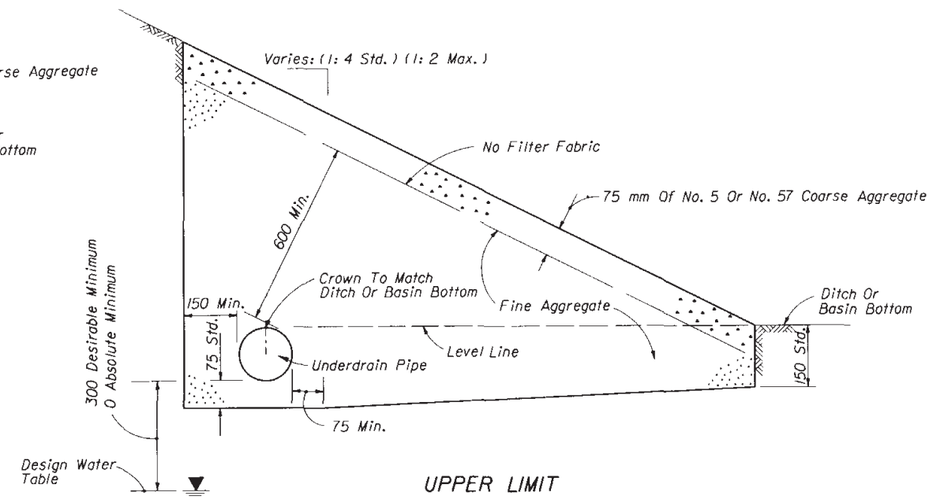

UPPER LIMIT

TYPE V a

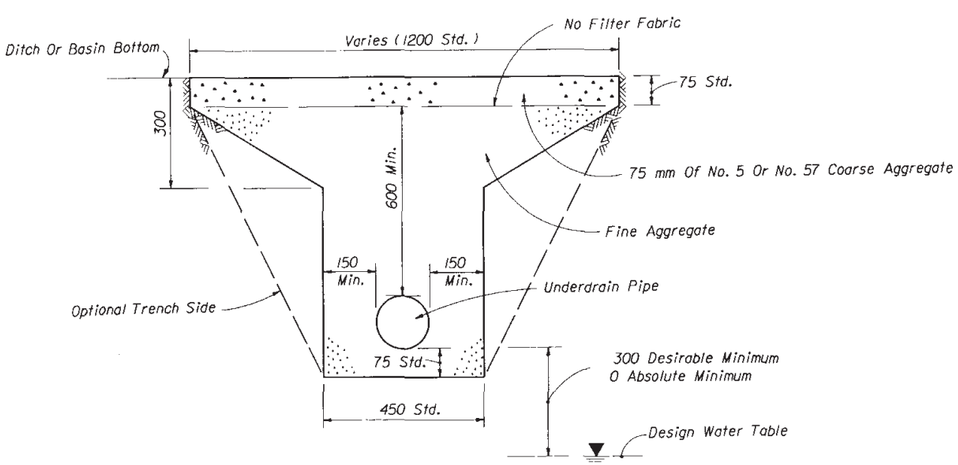

TYPE V b

UNDERDRAIN

DESIGN NOTES FOR UNDERDRAIN

1. The type of underdrain should be selected to meet design water removal rate and soil conditions. Caution is prescribed in the use of these typical sections since special designs may be required to satisfy project conditions.
2. Type I underdrain is intended for minimum water removal conditions.
3. Type II underdrain is intended for moderate water removal conditions. Where reactive conditions may create chemical clogging, the use of an inert material and/or elimination of the filter fabric may be necessary.
4. Type III underdrain is intended for maximum water removal conditions. The filter fabric separation is required between the coarse aggregate or fine aggregate including those described in general notes 2 and 3. Design note 3 applies for reactive conditions.
5. Type V underdrain is intended for use in detention basins and other locations which require a filtration system. Type Va is recommended and Type Vb should be used only when Type Va is inappropriate. The standard fine aggregate specified for Type V underdrain conforms to filtration gradation requirements of Chapter 17-25.025 F.A.C..
6. The designer should evaluate whether a filter fabric envelope is required around underdrain Types I, III, and Va. When required, fabric shall be specified in the plans. Fabric to be paid for separately.

GENERAL NOTES FOR UNDERDRAIN

1. The underdrain pipe shall be either 100 mm smooth or 125 mm corrugated tubing unless otherwise shown in the plans. The size to be furnished will be based on the nominal internal diameter of a pipe with a smooth interior wall. Except when prohibited by the plans, the special provisions or this standard, pipe with a corrugated interior wall may be provided based on the following size equivalency.

   100 mm smooth interior equivalent to 125 mm corrugated interior
   125 mm smooth interior equivalent to 150 mm corrugated interior
   150 mm smooth interior equivalent to 200 mm corrugated interior
   200 mm smooth interior equivalent to 250 mm corrugated interior

2. Fine aggregate shall be quartz sand meeting the requirements of Sections 902-4 of the Standard Specifications.
3. Coarse aggregate shall be gravel or stone meeting the requirements of Sections 901-2 or 901-3 respectively. The gradation shall meet Section 901-6, Grades 4, 467, 5, 56 or 57 stone unless restricted in the plans.
4. Underdrain Type I, II, III and V shall be in accordance with Section 440.
5. Filter fabric shall be Type D-3 (See Index No. 199).
6. When corrugated polyethylene tubing with slots or 360° perforations is used in conjunction with fine aggregate, a filter fabric sock meeting Section 948-5 is required.
7. For standard location details, see Index No. 500. Special locations require location details in the plans.
8. All Filter fabric joints shall overlap a minimum of 300 millimeters.
9. Underdrain outlet pipes shall be constructed in accordance with the outlet pipe details and general notes for Edgedrain, Index No. 287. Outlet pipes are to be 100 mm diameter unless larger pipe sizes are specified in the plans.
10. Pay Item shall be based on the size of the smooth interior products. The contract unit price for Underdrain, MI, shall include the following components for each underdrain type as follows:

    Type I: Pipe, sock and aggregate.
    Type II: Pipe, aggregate and filter fabric envelope.
    Type III: Pipe, aggregates and internal filter fabric envelope.
    Type Va & Vb: Pipe, sock and aggregates.

    External filter fabric envelopes, when specified for underdrain Types I, III, and Va, shall be paid for separately under the contract unit price for Plastic Filter Fabric (M2).

    The contract unit price for Underdrain Outlet Pipe (100 mm) MI, shall be full compensation for removal of existing shoulder pavement, trench excavation, pipe and fittings, hardware cloth, stubbing into existing inlets and paved ditches, restoration of ditch pavement, backfill in place and disposal of excess materials.

    Concrete apron shall be paid for under the contract unit price for Conc. Class I (Miscellaneous), M3.

    Sodding shall be paid for under the contract unit price for Sodding, M2.

    Shoulder pavement shall be paid for under the contract unit price for Asphatic Concrete Type S, MT.

    Tack coat shall be paid for under the contract unit price for Bituminous Material (Tack Coat), LI.

STATE OF FLORIDA DEPARTMENT OF TRANSPORTATION
ROAD DESIGN

UNDERDRAIN

	Names	Dates
Designed By	EGR	10/85
Drawn By	HSD	10/85
Checked By	EGR	10/85

Approved By S. A. McLemore
State Drainage Engineer

Revision No.	Sheet No.	Index No.
94	1 of 1	286

F.H.W.A. Approved:

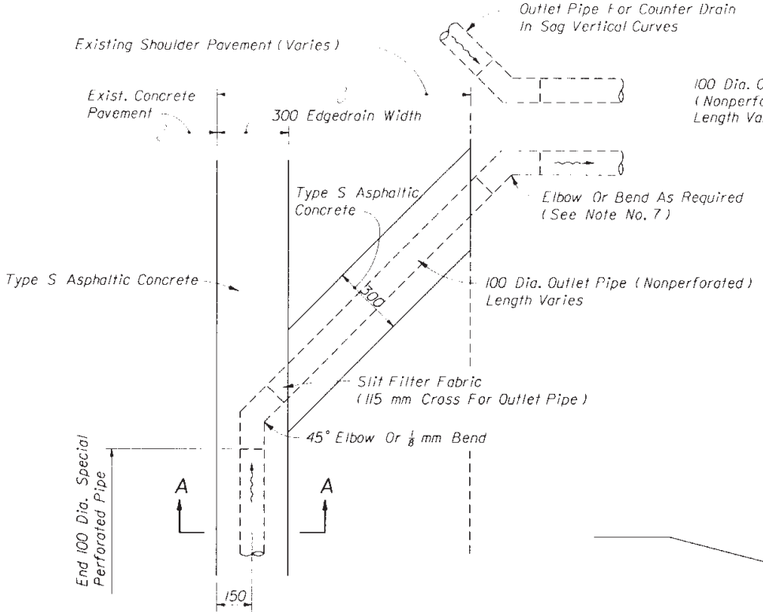

ALIGNMENT OF OUTLET PIPE

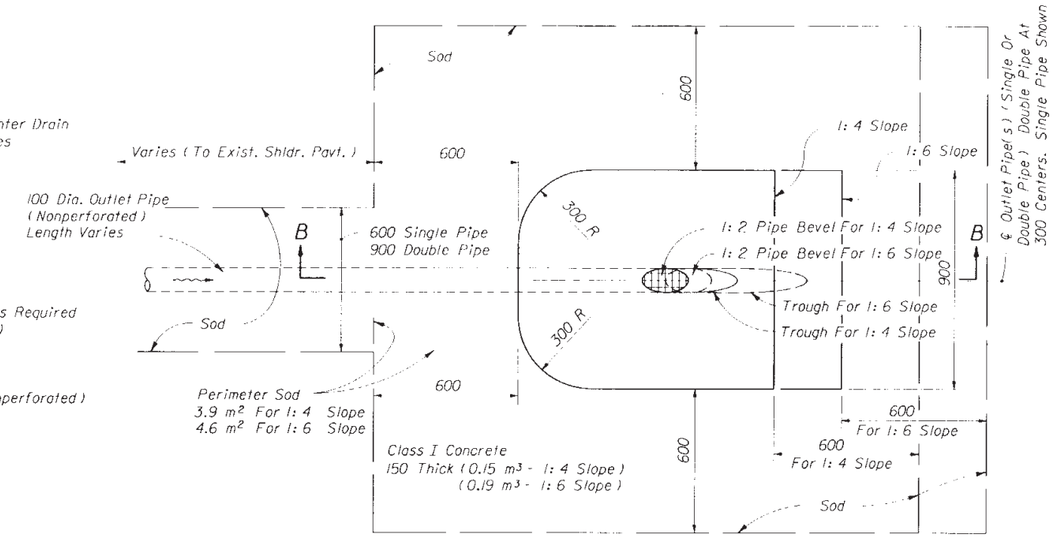

PLAN - OUTLET PIPE APRON

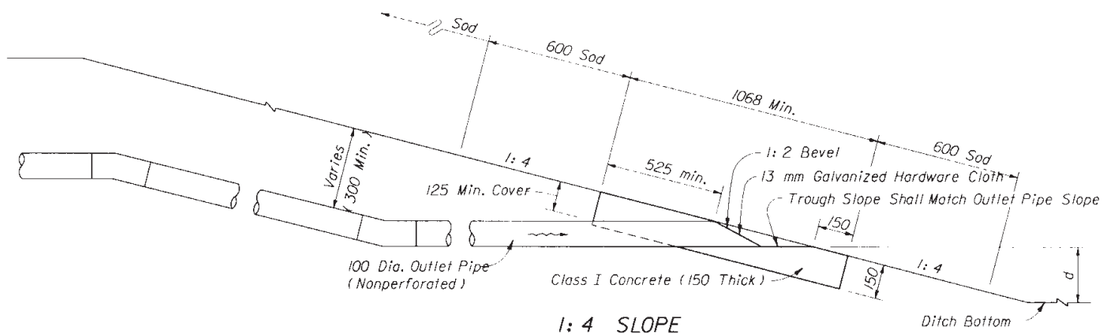

1: 4 SLOPE

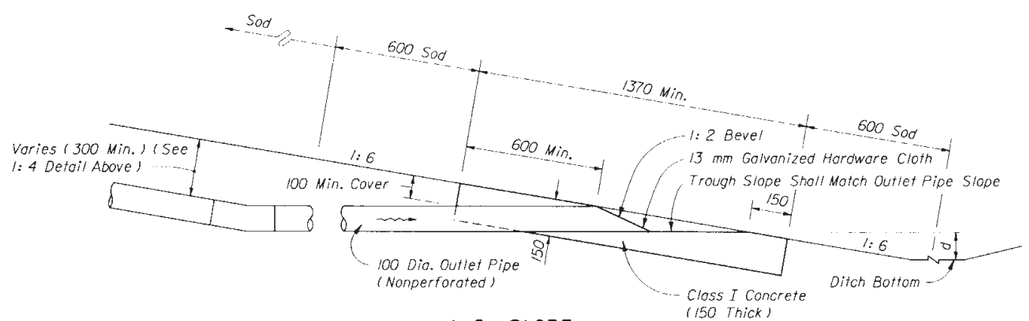

1: 6 SLOPE

SECTIONS BB

d : 535 mm std. for grassed ditches
150 mm std. for paved ditches

[less is acceptable to provide minimum 0.1% outlet pipe slope]

100mm EDGEDRAIN

EDGEDRAIN OUTLET

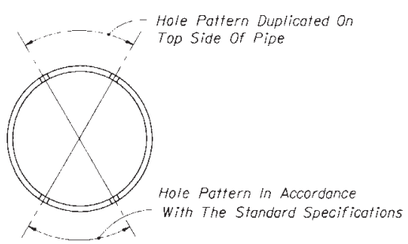

HOLE PATTERN
SUBDRAINAGE PIPE

GENERAL NOTES FOR CONCRETE PAVEMENT SUBDRAINAGE

1. No trench greater than 610 mm in depth will be allowed overnight. Trenches shall be barricaded at all times.
2. Concrete pavement subdrainage shall be constructed adjacent to the low edge of the roadway pavement and under travel lanes, auxillary pavement and shoulders, as called for in the plans. When the low edge shifts between outside and inside edges of pavement the concrete pavement subdrainage shall extend 15.0 m beyond and begin 15.0 m before the flat point (30.0 m overlap).

   Concrete pavement subdrainage shall be placed on the low side of ramps of crossroad terminals.
3. Concrete pavement subdrainage shall be constructed on a grade parallel with the edge of pavement profile, except on profiles flatter than one-tenth percent (0. 10%) the concrete pavement subdrainage shall be constructed on a grade of one-tenth percent (0. 10%).
4. Immediately prior to placing the filter fabric the entire vertical face of the concrete pavement shall be cleaned to remove adhering base material and soil.
5. The Contractor shall devise a procedure for holding the filter fabric in position on the vertical face of the trench. The procedure must be approved by the Engineer prior to placement of the draincrete.
6. The upper end of each separate run of the concrete pavement subdrainage pipe shall be capped.
7. Outlet pipes shall be constructed at a maximum of 150.0 m intervals. Elbows or 1/8 bends shall be used to connect the outlet pipe to the concrete pavement subdrain pipe. The elbows or bends shall be of the same material as the outlet pipe but compatible with the pipe.

   When directed by the Engineer, outlet pipes shall be stubbed into existing inlets or into existing ditch pavements at an elevation 150 mm above the inlet flowline or ditch bottom. Concrete apron and bordering sod are not required for stubbed outlets, but replacement sodding will be required at trenches for pipes stubbed into paved ditches.

   In sag vertical curves separate outlet pipes for concrete pavement subdrains from opposite directions shall use a single apron unless otherwise shown in the plans or otherwise directed by the Engineer.

   Backfill around outlet pipes shall be of cohesive soils, draincrete will not be permitted.
8. Existing paved shoulder that is removed for the construction of outlet pipes shall be replaced with Type S asphaltic concrete at the rate of 271 kg per square meter.
9. The contract unit price for Edgedrain Outlet Pipe (100 mm) MI, shall be full compensation for removal of existing shoulder pavement, trench excavation, pipe and fittings, hardware cloth, stubbing into existing inlets and paved ditches, restoration of ditch pavement, backfill in place and disposal of excess materials.

STATE OF FLORIDA DEPARTMENT OF TRANSPORTATION
ROAD DESIGN

CONCRETE PAVEMENT SUBDRAINAGE

	Names	Dates
Designed By	HMD	10/94
Drawn By	DLD	10/94
Checked By	HMD/WPH	10/94
F.H.W.A. Approved:		

Approved By: State Drainage Engineer

Revision No.	Sheet No.	Index No.
94	1 of 3	287

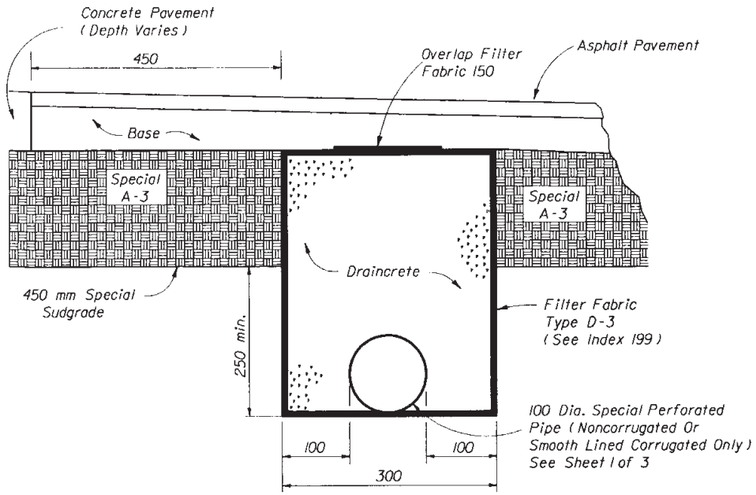

ASPHALT SHOULDERS

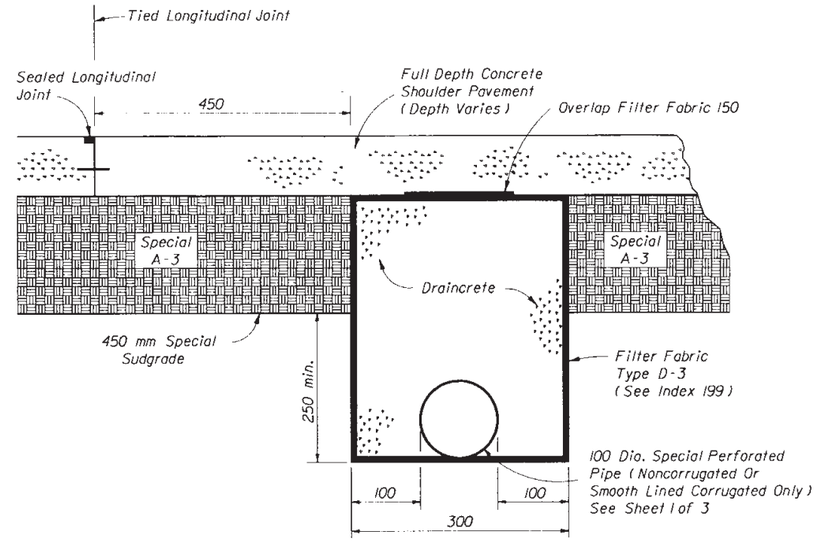

CONCRETE TRAVEL LANES,
SHOULDERS AND AUXILIARY PAVEMENT

NOTES FOR DRAINCRETE PAVEMENT SUBDRAINAGE

1. The contractor shall confine the construction of draincrete edgedrain to an area in which the entire operation can be carried out in five (5) work days, unless another construction period is called for in the plans, with sufficient time allowed for the draincrete to set before placement of the pavement.

METHOD OF PAYMENT

NEW CONSTRUCTION:

1. Payment shall be full compensation for trench excavation, disposal of excess materials, filter fabric, pipe and fittings, and barricades necessary for concrete pavement subdrainage construction. Payment shall be included in the cost for Base Asphalt Treated Permeable, M3, Concrete Treated Permeable Base, M3.

   Payment for outlet pipe shall be in accordance with General Note 9, Sheet 1 of 3.

FOR REHABILITATION:

1. The contract unit price for Edgedrain (Draincrete) (100) MI, shall be full compensation for removal of existing shoulder pavement, trench excavation, disposal of excess materials, filter fabric, draincrete edgedrain pipe and fittings, draincrete, and barricades necessary for edgedrain construction.

   Payment for outlet pipe shall be in accordance with General Note 9, Sheet 1 of 3.

   Concrete apron shall be paid for under the contract unit price for Class I Concrete (Miscellaneous), M3.

   Sodding shall be paid for under the contract unit price for Sodding, M2.

   Shoulder pavement shall be paid for under the contract unit price for Asph Conc Type S, KG.

   Tack coat shall be paid for under the contract unit price for Bit Matl (Tack Coat), LI.

   Shoulder joint seal shall be paid for under the contract unit price for Pavt Joint Seal, MI.

NEW CONSTRUCTION

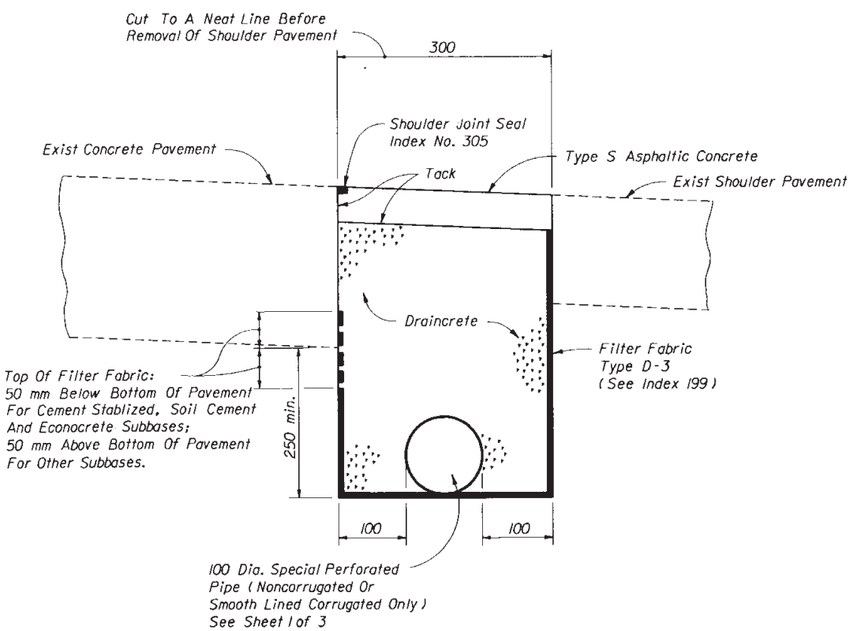

REHABILITATION

DRAINCRETE SUBDRAINAGE

STATE OF FLORIDA DEPARTMENT OF TRANSPORTATION
ROAD DESIGN

CONCRETE PAVEMENT SUBDRAINAGE

	Names	Dates
Designed By	HMD	10/94
Drawn By	DLD	10/94
Checked By	HMD/WPH	10/94

Approved By A. M. Lemore
State Drainage Engineer

Revision No.	Sheet No.	Index No.
94	2 of 3	287

F.H.W.A. Approved:

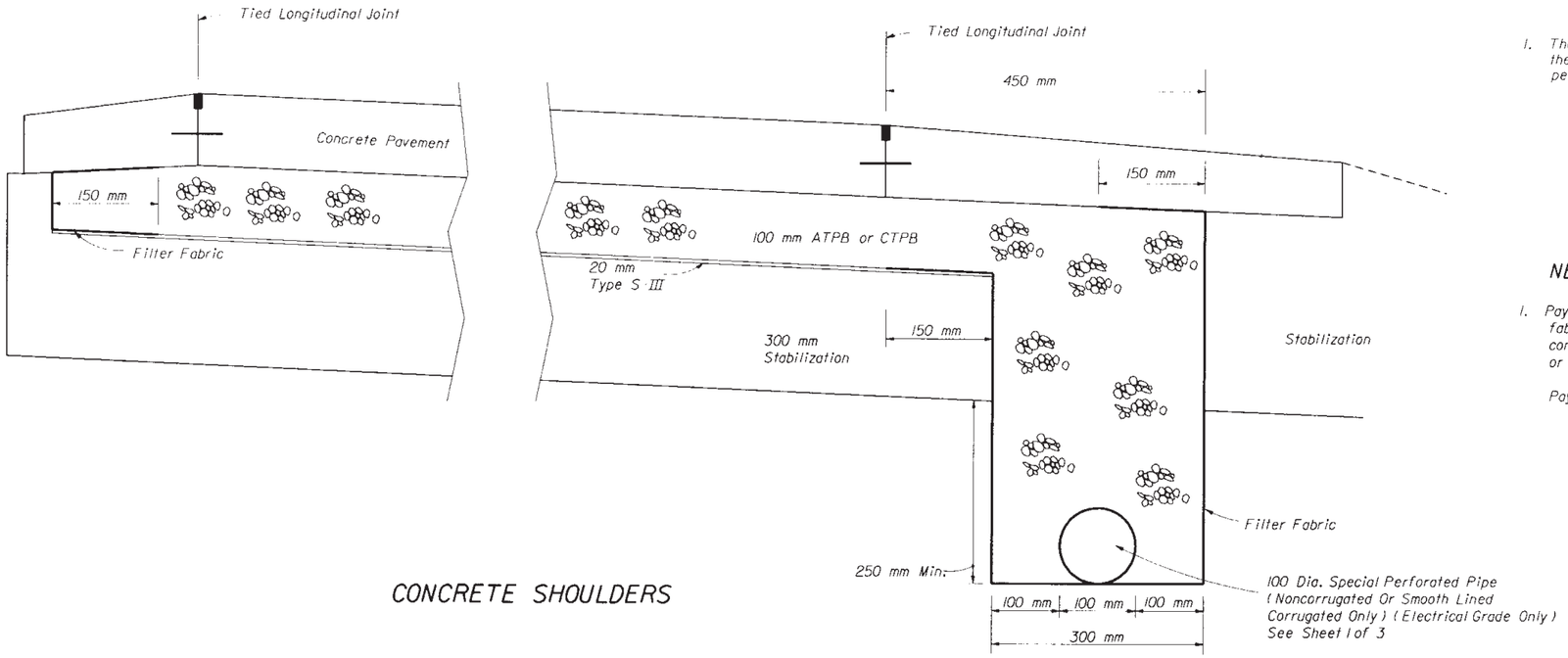

CONCRETE SHOULDERS

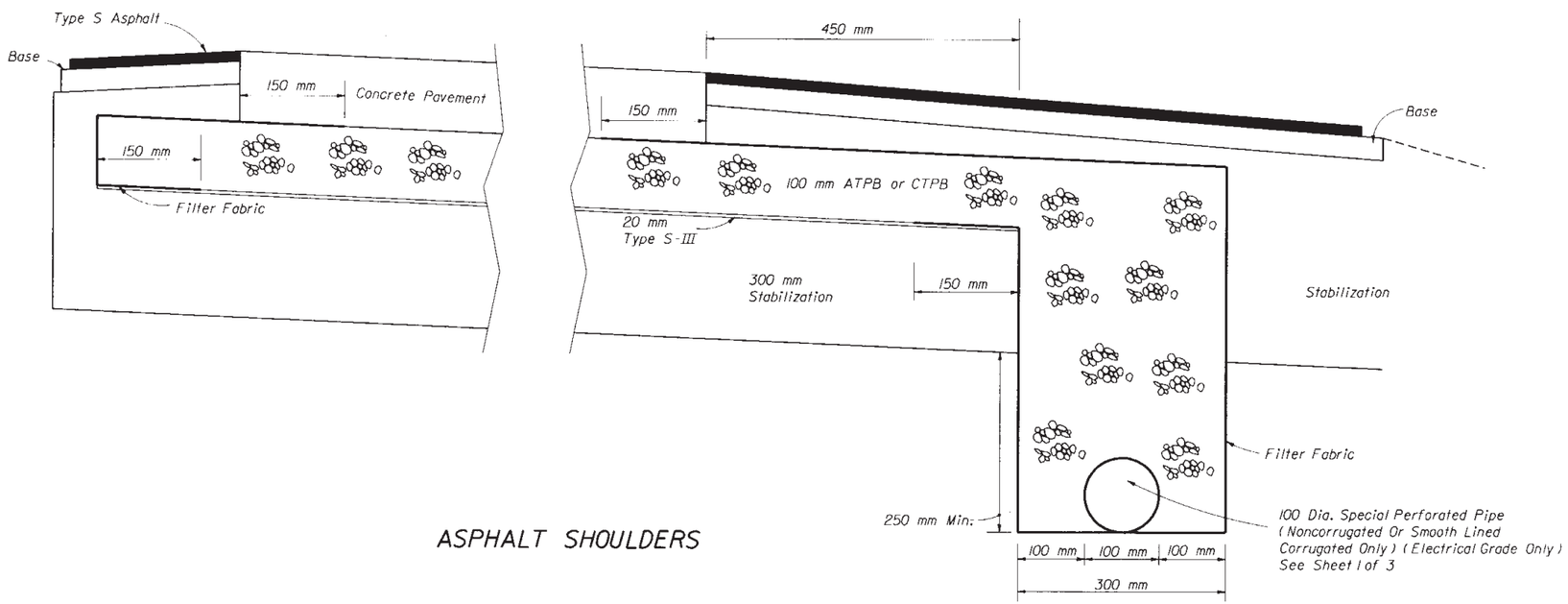

ASPHALT SHOULDERS

MONOLITHIC SUBDRAINAGE

GENERAL NOTES FOR MONOLITHIC EDGEDRAIN (NEW CONSTRUCTION)

1. The contractor shall confine the construction of monolithic edgedrain to an area in which the entire operation can be carried out in five (5) work days, unless another construction period is called for in the plans, with sufficient time allowed for the permeable base to set.

METHOD OF PAYMENT

NEW CONSTRUCTION

1. Payment shall be full compensation for trench excavation, disposal of excess materials, filter fabric, pipe and fittings, and fittings, and barricades necessary for concrete pavement subdrainage construction. Payment shall be included in the cost for Base Asphalt Treated Permeable, M3 or Concrete Treated Permeable Base M3.

   Payment for outlet pipe shall be in accordance with General Note 9, Sheet 1 of 3.

STATE OF FLORIDA DEPARTMENT OF TRANSPORTATION
ROAD DESIGN

CONCRETE PAVEMENT SUBDRAINAGE

	Names	Dates
Designed By	HMD	10/94
Drawn By	DLD	10/94
Checked By	HMD/WPH	10/94
F.H.W.A. Approved:		

Approved By S. A. McLemore
State Drainage Engineer

Revision No.	Sheet No.	Index No.
94	3 of 3	287

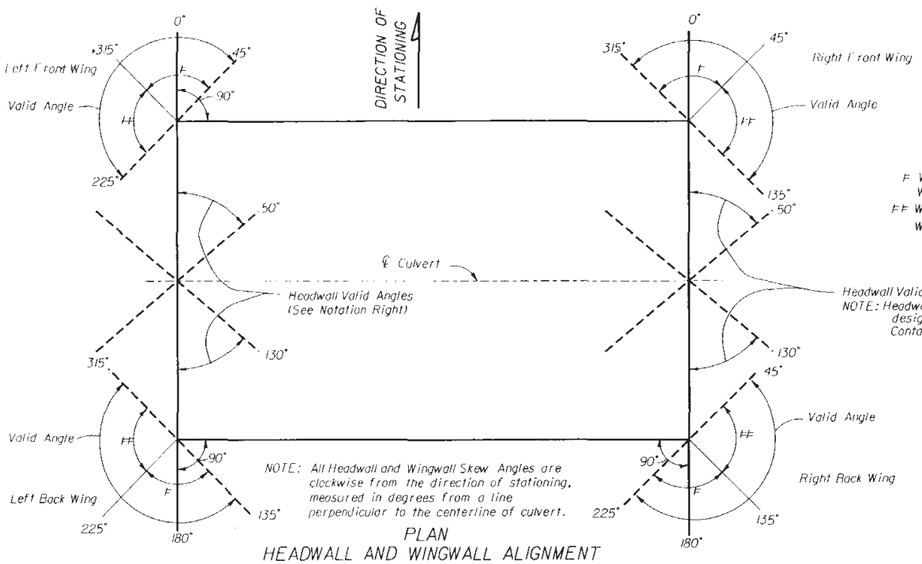

F Within these limits the top surface of the Wingwalls shall be level.

FF Within these limits the top surface of the Wingwalls shall be sloped.

NOTE: Headwalls with skew angles between 51° and 129° require special design authorization. Other design options should be considered. Contact the District Drainage Engineer to obtain authorization.

NOTE: All Headwall and Wingwall Skew Angles are clockwise from the direction of stationing, measured in degrees from a line perpendicular to the centerline of culvert.

PLAN
HEADWALL AND WINGWALL ALIGNMENT

NOTE: Designs for box culverts under this index are to be produced only by computer analysis, utilizing the program named PSTDN55. Designs under this index are to be limited to the live loads and dimensional restraints shown in the General Notes of this index and to the fill on the barrel(s) as shown in the roadway plans. It is the construction Contractors responsibility to provide for suppporting construction loads that exceed the above loadings.

GENERAL NOTES

DESIGN SPECIFICATIONS: A.A.S.H.T.O. 1983.

LOADING: HS20-44, Modified for Military Loading as Required

SURFACE FINISH: The Class Surface Finish for all concrete surfaces shall be a general surface finish.

SKEWED CONSTRUCTION JOINTS: Construction joints in barrels of culverts with skewed wingwalls may be placed parallel to the headwalls and the reinforcing steel, in the slabs may be cut provided that the cut reinforcing steel extends beyond the construction joint enough for splices to be made in accordance with the table (lower right) this sheet. The cost of construction joints shall be at the expense of the contractor.

CULVERT EXTENTIONS: For cut backs and ties into existing concrete box culverts see Index No. 280

* REINFORCING BAR SCHEDULE:

A. When the depth is less than or equal to 600 mm, Bars C2 are utilized in the bottom of the top slab. In all other cases, Bars C2 are replaced with Bars C1 spaced at 450 mm on centers.

B. When the skew angle for a headwall equals 0 degrees plus or minus 11 degrees the respective S Bars (S2 or S3) will not be utilized.

C. When the barrel height is less than 1.8 m, Bars B2 will be eliminated as shown in Detail J.

D. If the span is less than 1.5 m, Bars A1 and A2 will be Type II Bars.

E. The portions of Bars "N" that extend thru Construction Joints into wingwalls above footings shall be wrapped with one layer of 2666 g/m² smooth roofing.

F. For culvert extensions Bar C1 is redesignated Bar C3 in the bottom slab.

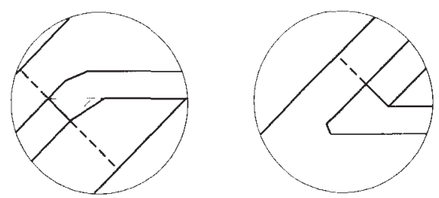

DETAIL "G"

DETAIL "H"

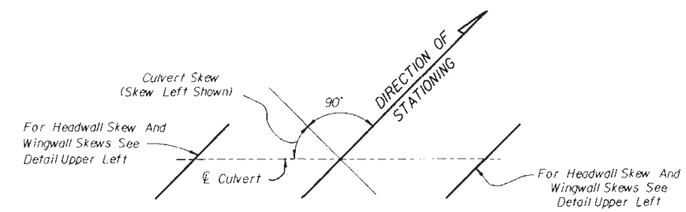

SKETCH "A"

NOTE: For Culvert Skew see Roadway Plans.

CULVERT ALIGNMENT

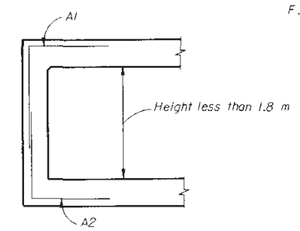

DETAIL "J"

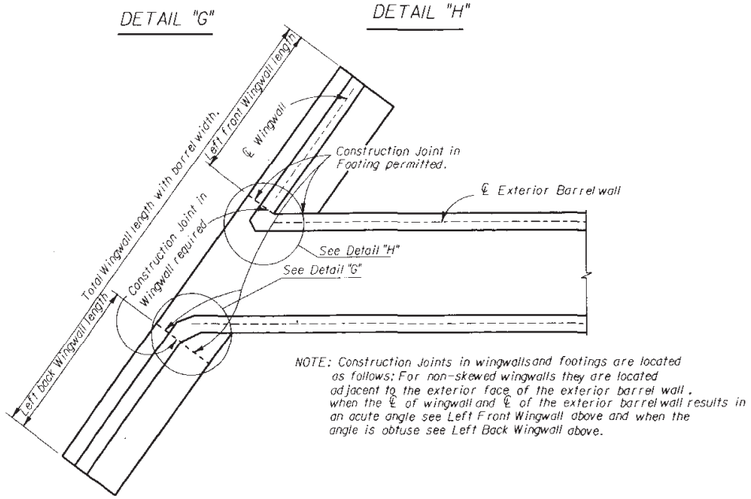

NOTE: Construction Joints in wingwalls and footings are located as follows: For non-skewed wingwalls they are located adjacent to the exterior face of the exterior barrel wall. when the ℄ of wingwall and ℄ of the exterior barrel wall results in an acute angle see Left Front Wingwall above and when the angle is obtuse see Left Back Wingwall above.

PART PLAN SHOWING WINGWALLS AND THE LOCATION OF CONSTRUCTION JOINTS

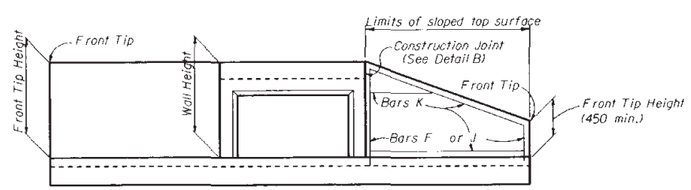

END ELEVATION OF CULVERT

NOTE: Cut the vertical bars F as required for the longest bar and use the remainder for the shortest bar in the wingwall. The vertical bars J and the horzontal bars K shall be constructed likewise. The lengths shown in the reinforcing steel bar schedule for bars F, J and K require cutting for sloped top wingwalls only.

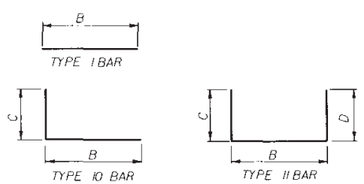

TABLE OF MINIMUM BAR SPLICE LENGTHS

BAR SIZE	SPLICE	BAR SIZE	SPLICE
15M	650	30M	1.55
20M	830	35M	2.23
25M	1.17	45M	3.35

STATE OF FLORIDA DEPARTMENT OF TRANSPORTATION
ROAD DESIGN

CONCRETE BOX CULVERT
CULVERT DETAILS

	Names	Dates
Designed By		
Drawn By	GFG	1-86
Checked By	RCB	1-86

F.H.W.A. Approved:

Approved By S. A. McLenore
State Drainage Engineer

Revision No.	Sheet No.	Index No.
94	1 of 5	290

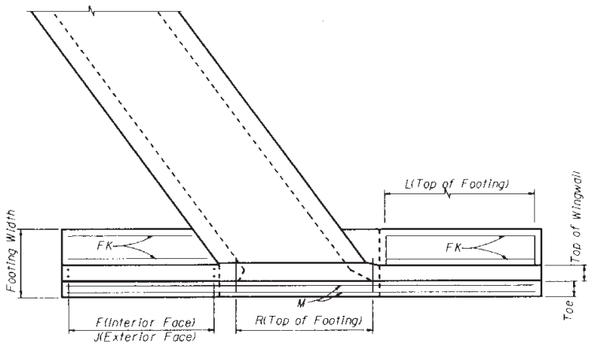

PART PLAN AT END OF CULVERT

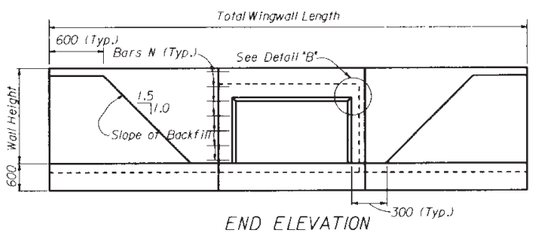

END ELEVATION

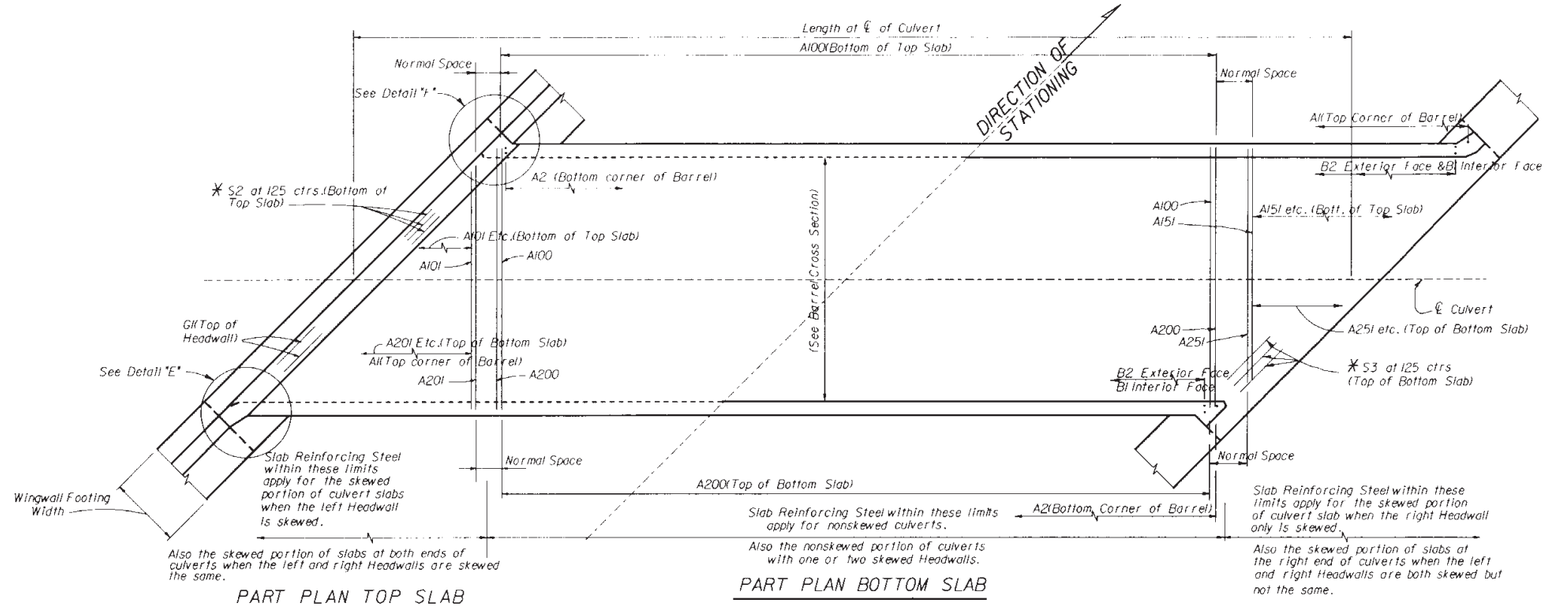

PART PLAN TOP SLAB

PART PLAN BOTTOM SLAB

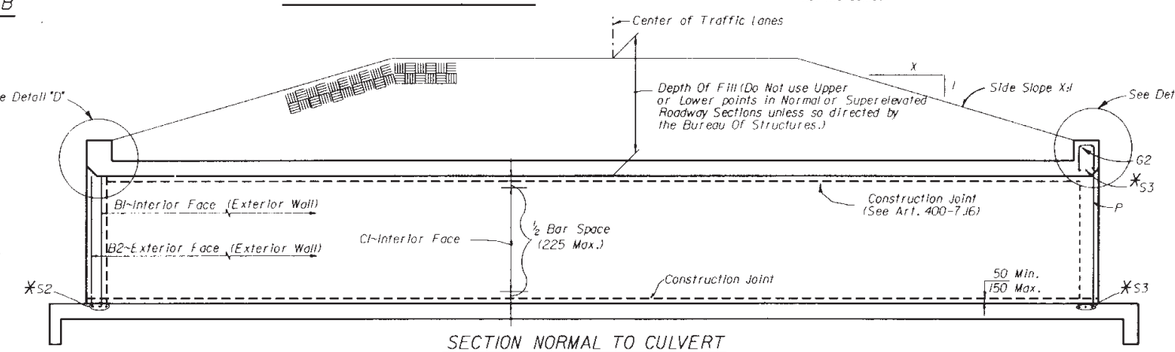

SECTION NORMAL TO CULVERT

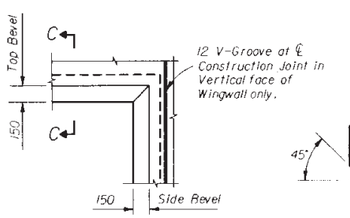

DETAIL "B"

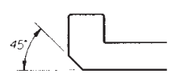

SECTION C-C

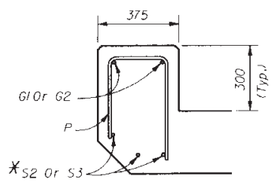

DETAIL "D"

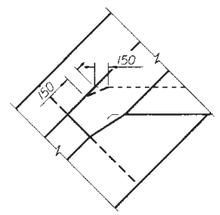

DETAIL "E"

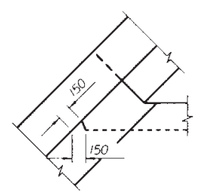

DETAIL "F"

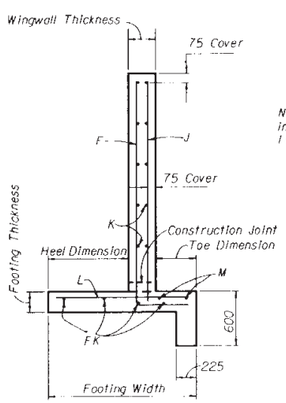

NOTE: For Bars F, J, K, L and or FK in the Wingwalls, the subscripts 1 thru 4 apply as follows:
1-Left Front
2-Left Back
3-Right Front
4-Right Back

SECTION THRU WINGWALL

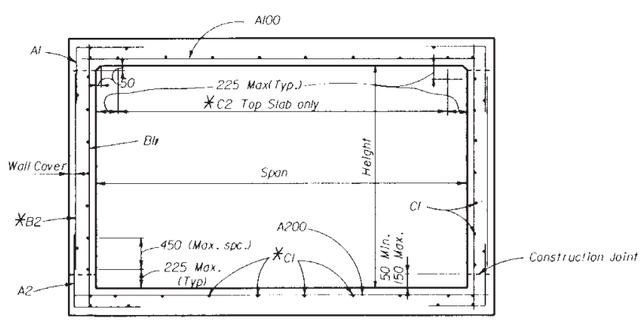

SECTION THRU BARREL

NOTE: The location of the first bar from the ends of the culvert shall not be less than 75, but not greater than one half the bar spacing.

* See Culvert Details and Reinforcing Bar Schedule, Sheet 1 of 5

STATE OF FLORIDA DEPARTMENT OF TRANSPORTATION
ROAD DESIGN

CONCRETE BOX CULVERT
SINGLE BARREL

	Names	Dates
Designed By		
Drawn By	GFG	1-86
Checked By	RCB	1-86

Approved By S. A. McLemore
State Drainage Engineer

Revision No.	Sheet No.	Index No.
94	2 of 5	290

F.H.W.A. Approved:

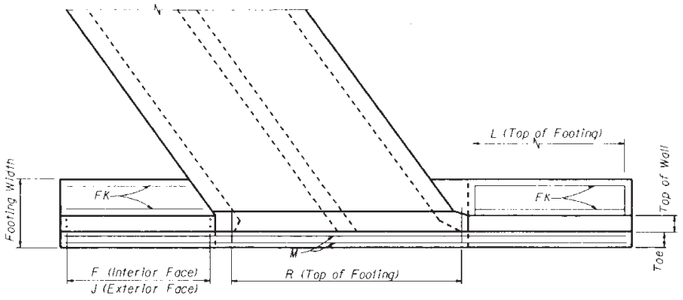

PART PLAN AT END OF CULVERT

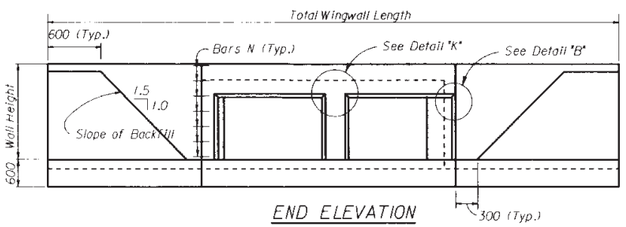

END ELEVATION

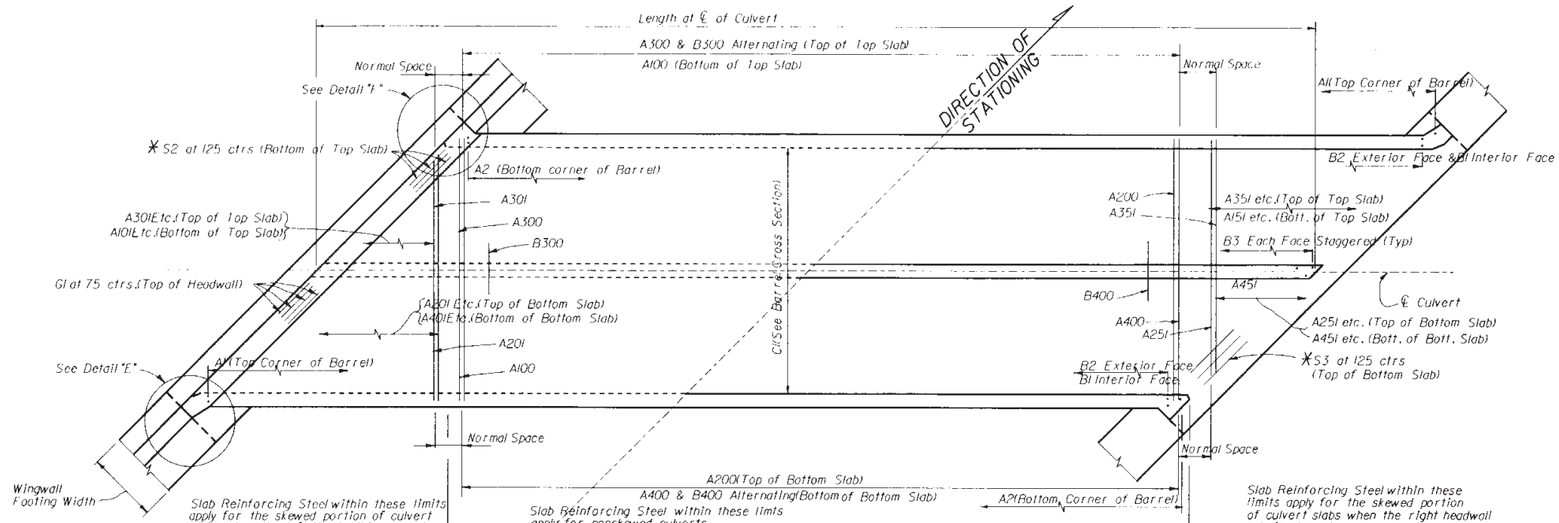

PART PLAN TOP SLAB

PART PLAN BOTTOM SLAB

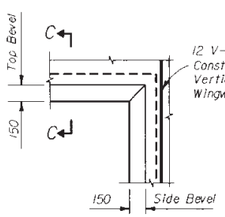

DETAIL "B"

SECTION C-C

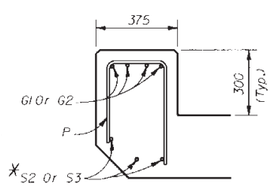

DETAIL "D"

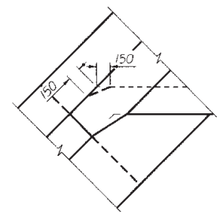

DETAIL "E"

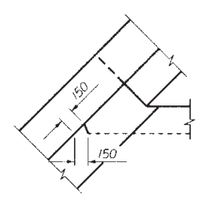

DETAIL "F"

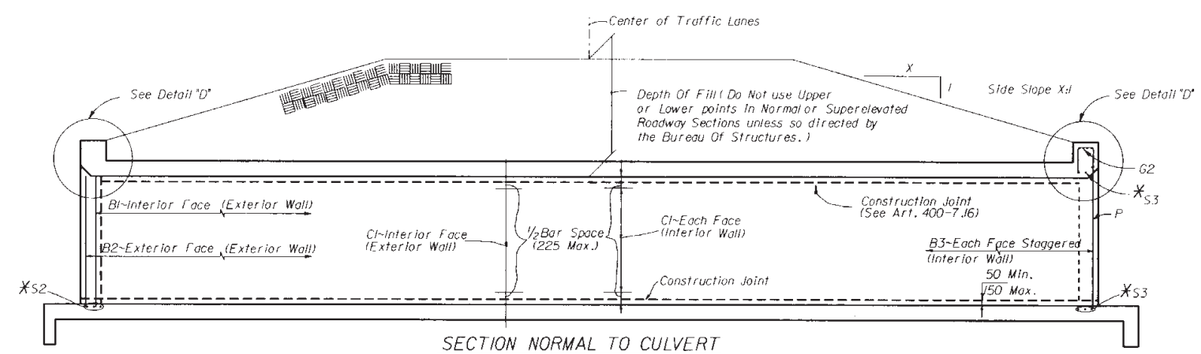

SECTION NORMAL TO CULVERT

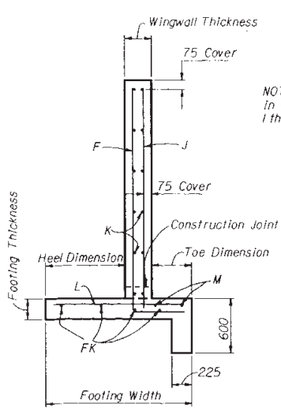

NOTE: For Bars F,J,K,L and or FK in the Wingwalls, the subscripts 1 thru 4 apply as follows:
1-Left Front
2-Left Back
3-Right Front
4-Right Back

SECTION THRU WINGWALL

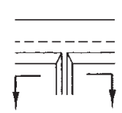

CULVERT NORMAL TO ROADWAY SHOWN

DETAIL K

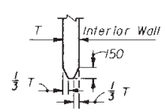

SECTION LL

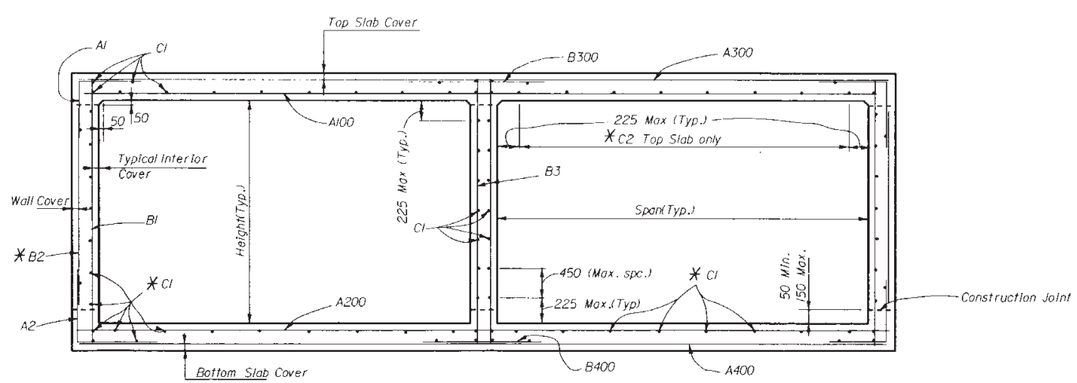

SECTION THRU BARREL

NOTE: The location of the first bar from the ends of the culvert shall not be less than 75, but not greater than one half the bar spacing.

* See Culvert Details and Reinforcing Bar Schedule, Sheet 1 of 5

STATE OF FLORIDA DEPARTMENT OF TRANSPORTATION
ROAD DESIGN

CONCRETE BOX CULVERT
DOUBLE BARREL

	Names	Dates
Designed By		
Drawn By	GFG	1-86
Checked By	RCB	1-86

Approved By S.A. McLemore
State Drainage Engineer

Revision No.	Sheet No.	Index No.
94	3 of 5	290

F.H.W.A. Approved:

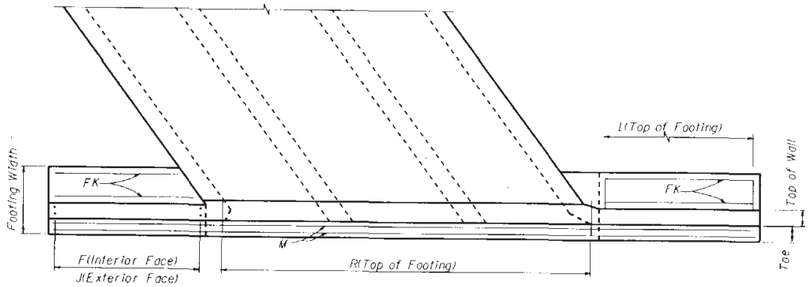

PART PLAN AT END OF CULVERT

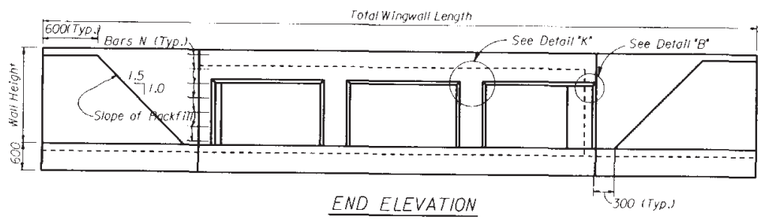

END ELEVATION

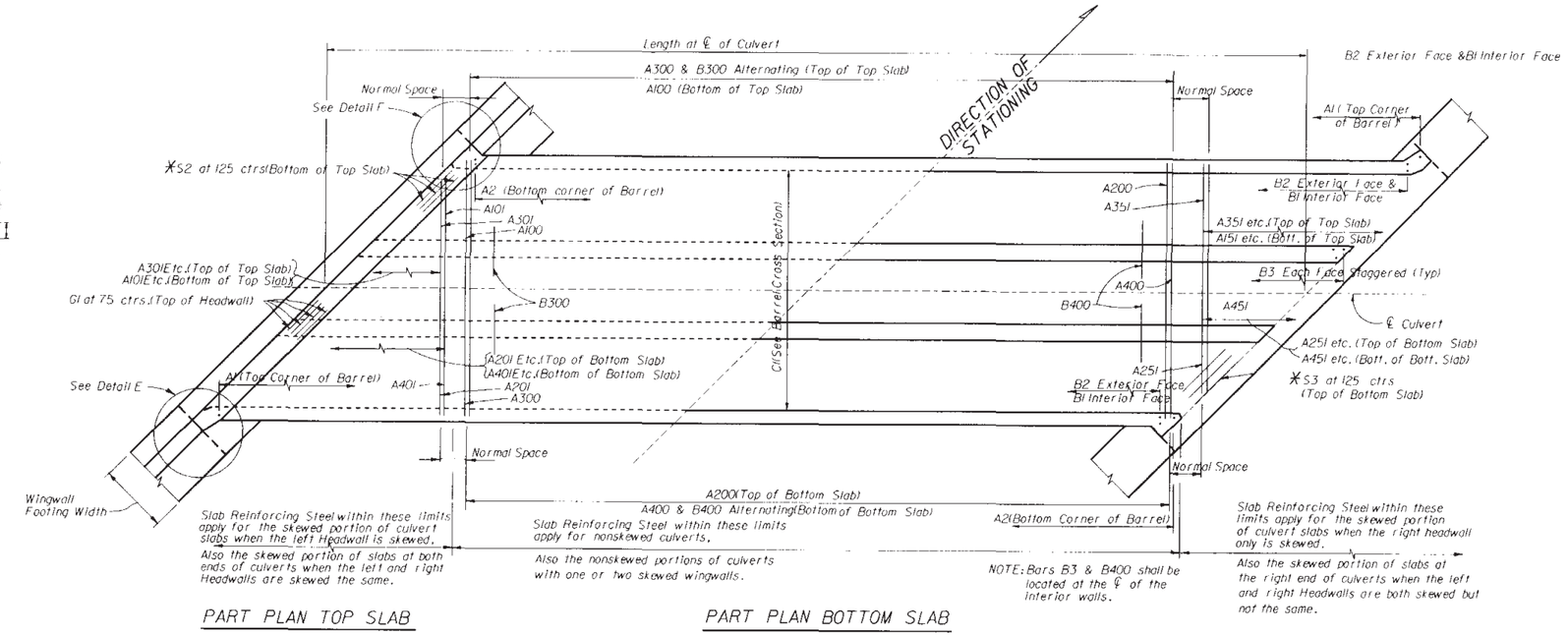

PART PLAN TOP SLAB

PART PLAN BOTTOM SLAB

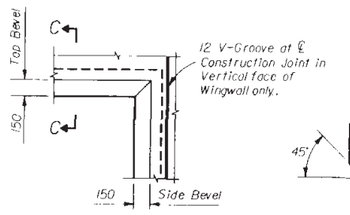

DETAIL "B"

SECTION C-C

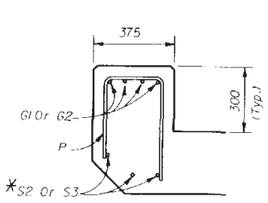

DETAIL "D"

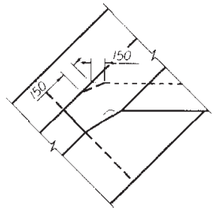

DETAIL "E"

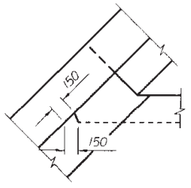

DETAIL "F"

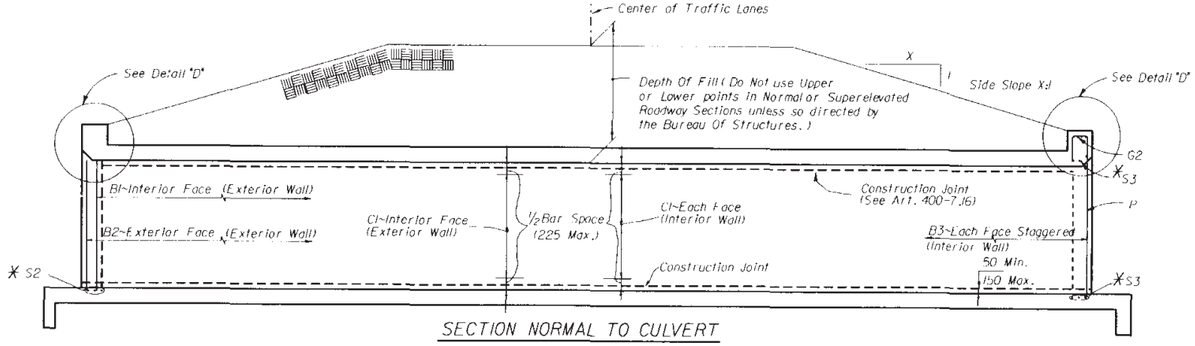

SECTION NORMAL TO CULVERT

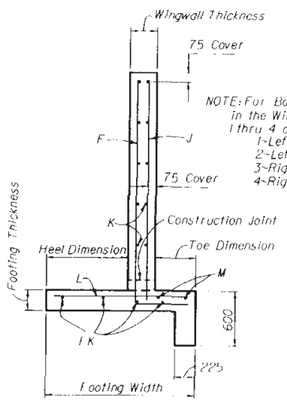

SECTION THRU WINGWALL

DETAIL K

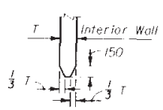

SECTION LL

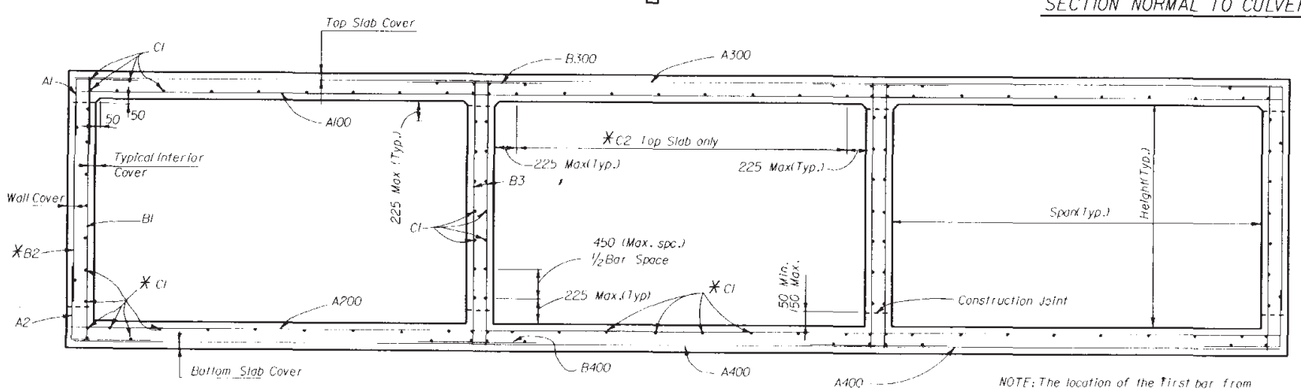

SECTION THRU BARREL

NOTE: The location of the first bar from the ends of the culvert shall not be less than 75, but not greater than one half the bar spacing.

*See Culvert Details and Reinforcing Bar Schedule, Sheet 1 of 5

STATE OF FLORIDA DEPARTMENT OF TRANSPORTATION
ROAD DESIGN

CONCRETE BOX CULVERT
TRIPLE BARREL

	Names	Dates
Designed By		
Drawn By	GFG	1-86
Checked By	RCB	1-86

Approved By S.A. McLemore
State Drainage Engineer

Revision No.	Sheet No.	Index No.
94	4 of 5	290

F.H.W.A. Approved:

m:\dtl file\88400\art\00290s04.snp

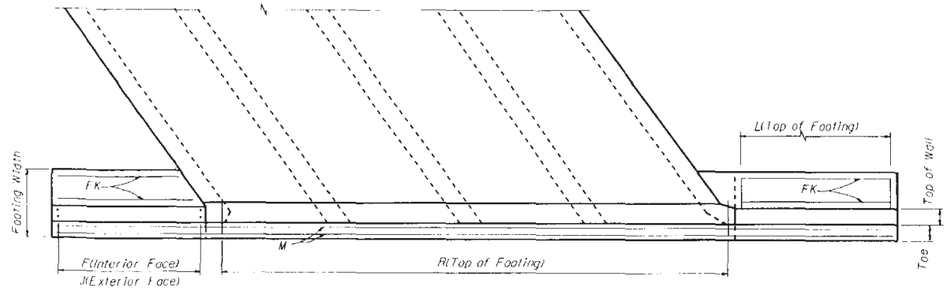

PART PLAN AT END OF CULVERT

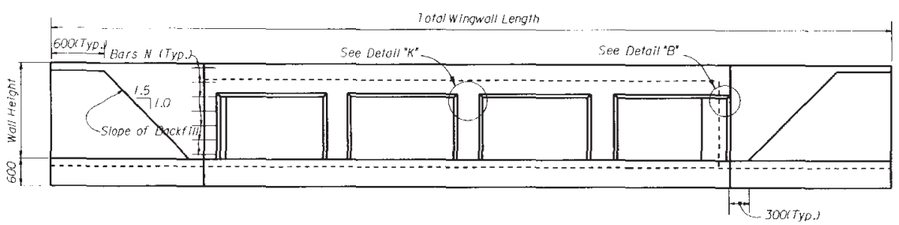

END ELEVATION

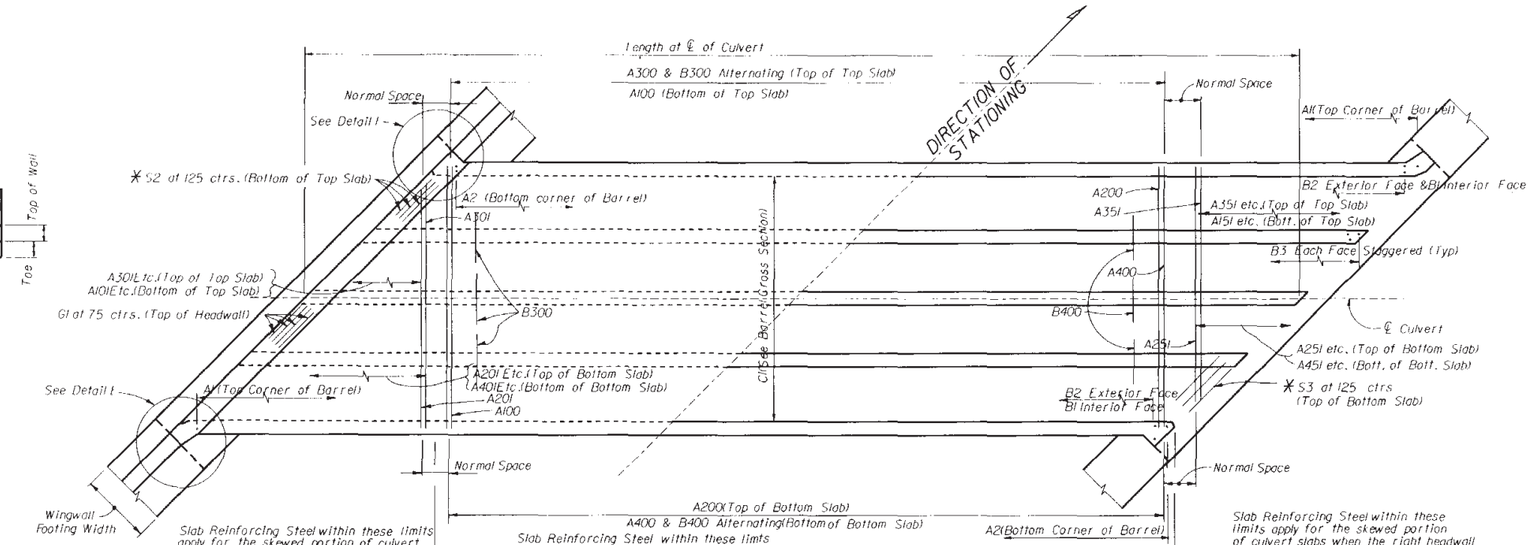

PART PLAN TOP SLAB

PART PLAN BOTTOM SLAB

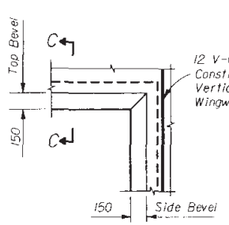

DETAIL "B"

SECTION C-C

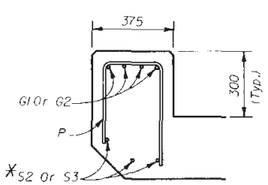

DETAIL "D"

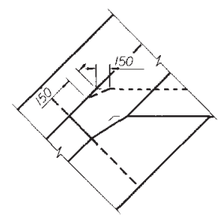

DETAIL "E"

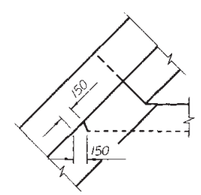

DETAIL "F"

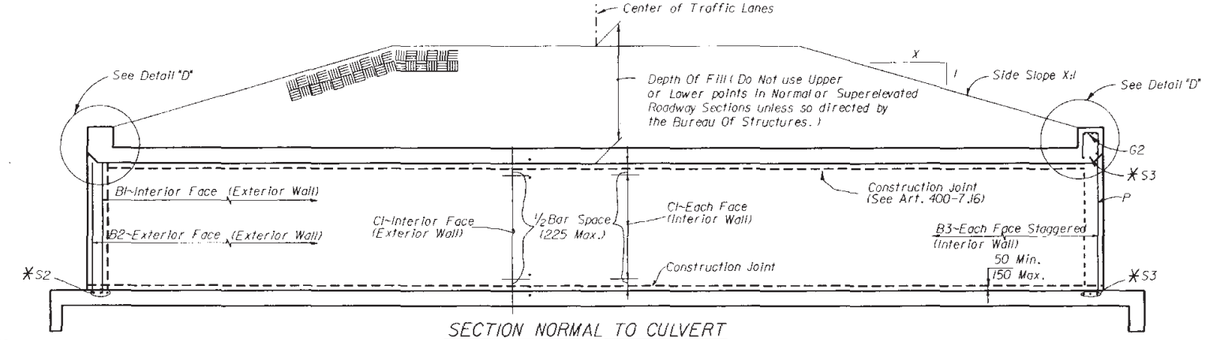

SECTION NORMAL TO CULVERT

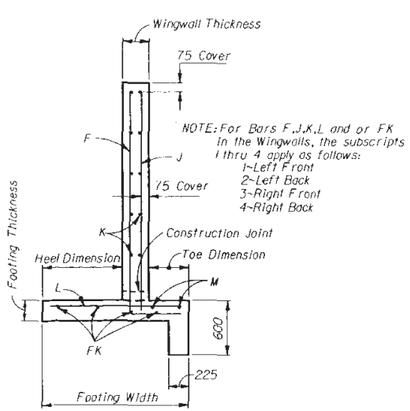

NOTE: For Bars F, J, K, L and or FK in the Wingwalls, the subscripts 1 thru 4 apply as follows:
1-Left Front
2-Left Back
3-Right Front
4-Right Back

SECTION THRU WINGWALL

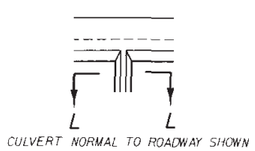

DETAIL K

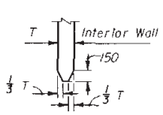

SECTION LL

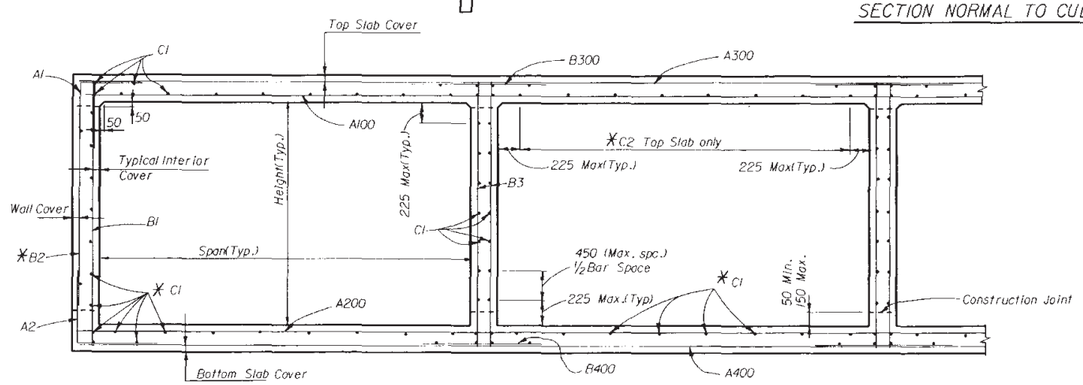

SECTION THRU BARREL

NOTE: The location of the first bar from the ends of the culvert shall not be less than 75, but not greater than one half the bar spacing.

* See Culvert Details and Reinforcing Bar Schedule, Sheet 1 of 5

STATE OF FLORIDA DEPARTMENT OF TRANSPORTATION
ROAD DESIGN

CONCRETE BOX CULVERT

QUADRUPLE BARREL

	Names	Dates
Designed By		
Drawn By	GFG	1-86
Checked By	RCB	1-86

Approved By A. A. McIlvaine
State Drainage Engineer

Revision No.	Sheet No.	Index No.
94	5 of 5	290

F.H.W.A. Approved:

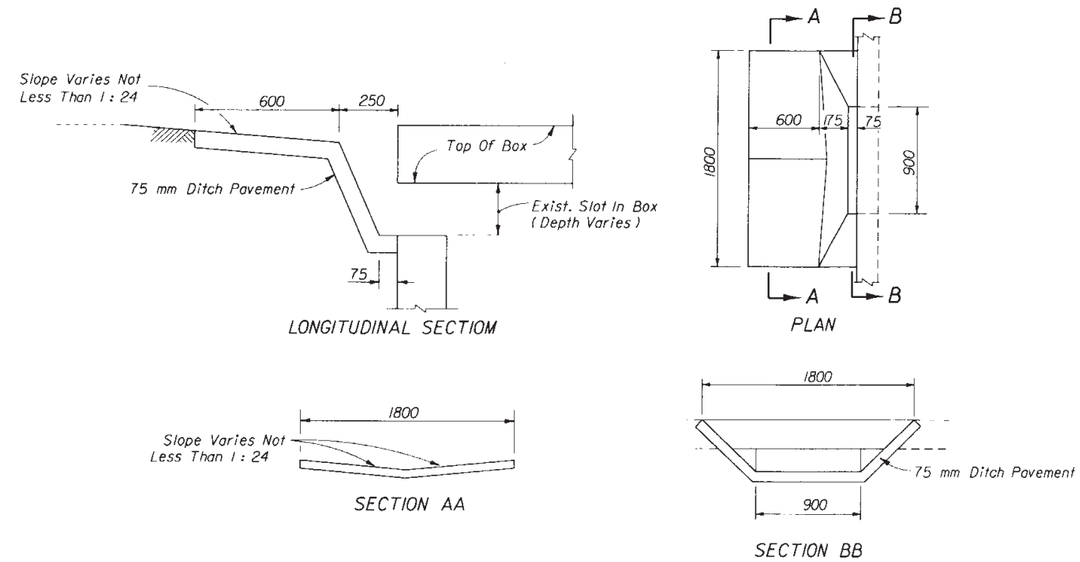

SAFETY MODIFICATION FOR INLETS IN BOX CULVERTS

STATE OF FLORIDA DEPARTMENT OF TRANSPORTATION
ROAD DESIGN

SAFETY MODIFICATIONS
FOR INLETS IN BOX CULVERTS

	Names	Dates
Designed By	HAB	07/67
Drawn By	MJT	07/67
Checked By	DWS	07/67
F.H.W.A. Approved:		03/20/75

Approved By A.D. Moore
State Drainage Engineer

Revision No.	Sheet No.	Index No.
94	1 of 1	293

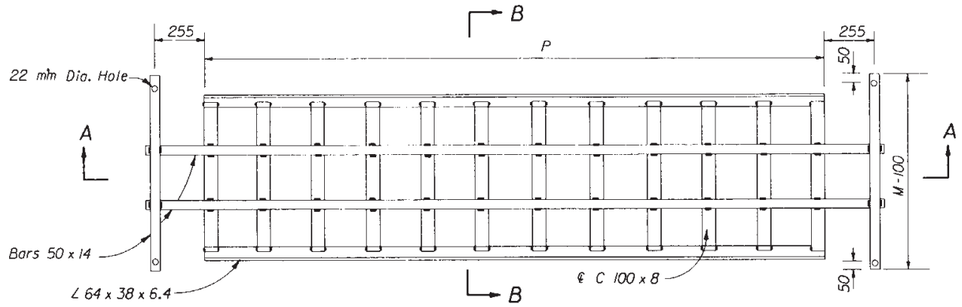

PLAN

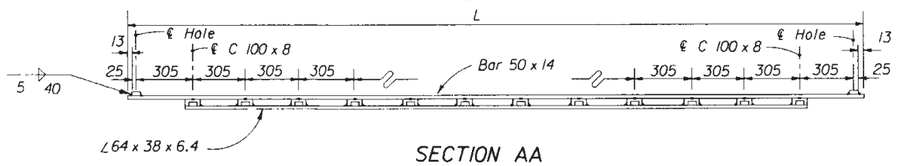

SECTION AA

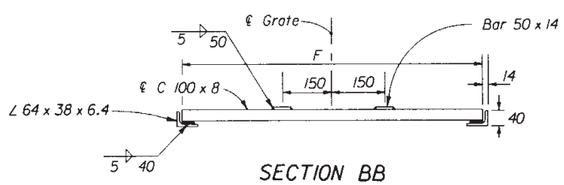

SECTION BB

GRATE DETAIL

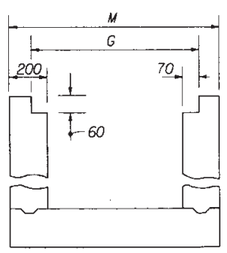

GRATE SEAT DETAIL

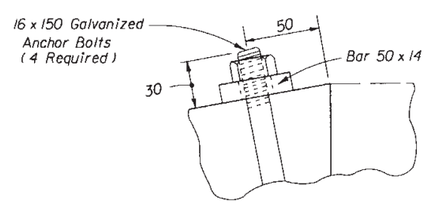

ANCHOR BOLT DETAIL

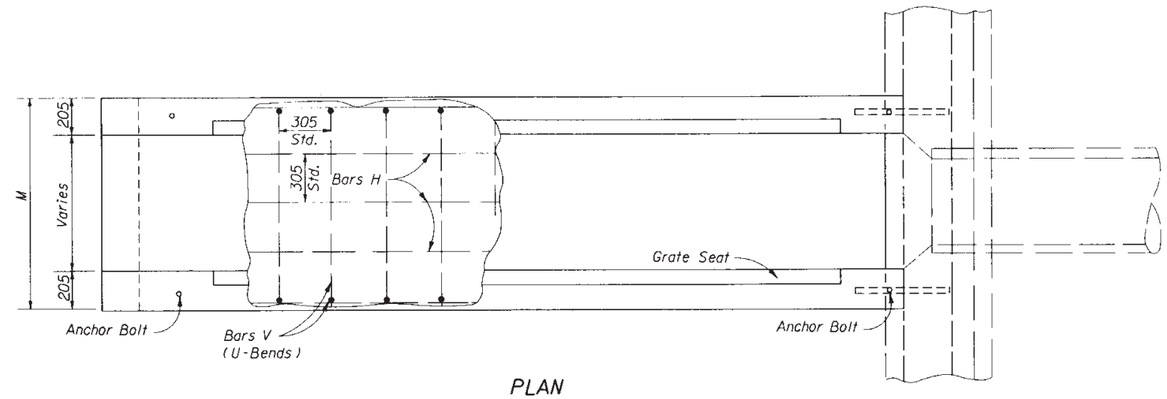

PLAN

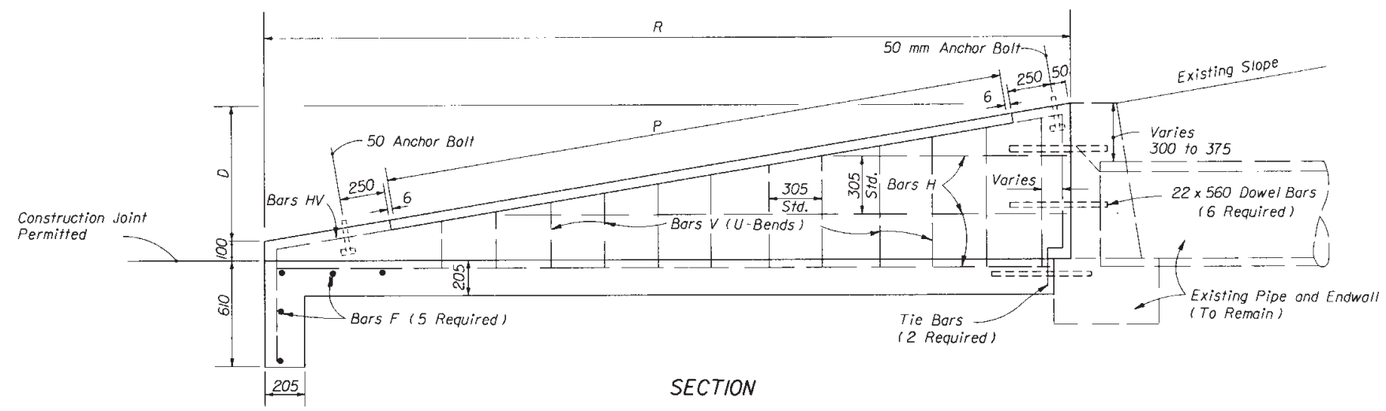

SECTION

GENERAL NOTES

1. For use criteria see "Steel Grating Use Criteria" Index No. 261.
2. Grates shall be ASTM A 242, A 441, A 572 or A 588, 425 MPa steel, and galvanized in accordance with Section 962-7 of the Standard Specifications.
3. Channel section C 75 x 8.9 may be substituted for the C 100 x 8 channel.
4. All reinforcing 15M bars with 50 mm clearance except as noted. Spacings shown are center to center. Laps to be 400 mm minimum. Welded wire fabric (two cages max.) having an equivalent cross section area (130 mm²) may be substituted for bar reinforcement.
5. Drill 45 mm holes 200 mm deep with a rotary drill in existing endwall for dowel bars. Holes shall be thoroughly cleaned prior to placing dowel bars and epoxy.
6. Endwall to be paid for under the contract unit price for Conc. Class I (Endwalls), M3 and Reinforcing Steel (Roadway), KG. Cost of dowel bars and epoxy mortar to be included in the contract unit price for reinforcing steel. Cost of grates to be paid for under the contract unit price for Endwall Grate, KG, plan quantity. Cost of galvanized bolts and nuts to be included in the contract unit price for the grate.
7. Sod slopes 1.5 mm each side and above endwall. Sodding to be paid for under the contract unit price for Sodding, M2.

DIMENSIONS AND QUANTITIES PER GRATE

Slope	Pipe Size	Channels @ 8.00 kg/m			Bars @ 5.50 kg/m (2 ea.)			Angles @ 5.40 kg/m (2)		Total Weight-kg
		Quantity	F	kg	L	M-0.10	kg	P	kg	
1: 6	375	10	0.78	62.40	3.431	0.98	48.52	2.85	30.73	141.65
	450	12	0.86	82.56	4.041	1.06	56.11	3.45	37.31	175.98
	600	15	1.01	121.20	4.956	1.21	67.83	4.37	47.20	236.23
	750	18	1.16	167.04	5.871	1.36	79.54	5.29	57.08	303.66
1: 4	375	6	0.78	37.44	2.211	0.98	35.10	1.62	17.55	90.09
	450	7	0.86	48.16	2.516	1.06	39.34	1.93	20.84	108.34
	600	9	1.01	72.72	3.126	1.21	47.70	2.54	27.43	147.85
	750	11	1.16	102.08	3.736	1.36	56.06	3.15	34.02	192.16

DIMENSIONS AND QUANTITIES PER U-ENDWALL

Pipe Size	G	M	D	R	P	Class I Concrete-m³	Reinforcing Steel-kg	Sodding m²
375	0.82	1.08	0.66	3.96	2.85	1.62	75.75	19.23
450	0.90	1.16	0.74	4.44	3.45	1.93	78.47	20.90
600	1.05	1.31	0.89	5.34	4.37	2.66	107.96	24.25
750	1.20	1.46	1.04	6.24	5.29	3.49	142.88	26.76
375	0.82	1.08	0.66	2.64	1.62	1.10	54.43	15.89
450	0.90	1.16	0.74	2.96	1.93	1.32	58.97	16.72
600	1.05	1.31	0.89	3.56	2.54	1.80	75.75	18.39
750	1.20	1.46	1.04	4.16	3.15	2.36	102.06	20.90

STATE OF FLORIDA DEPARTMENT OF TRANSPORTATION
ROAD DESIGN

SAFETY MODIFICATIONS FOR ENDWALLS

	Names	Dates
Designed By		
Drawn By		
Checked By		

Approved By S. D. McLemore
State Drainage Engineer

F.H.W.A. Approved:

Revision No.	Sheet No.	Index No.
94	1 of 1	295

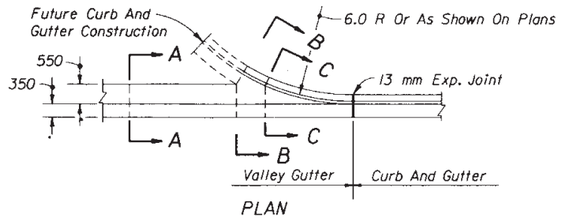

PLAN

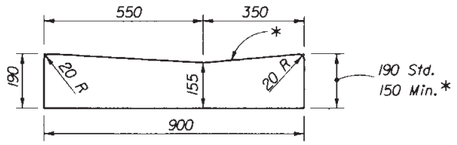

SECTION AA

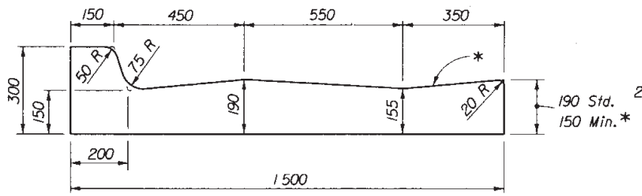

SECTION BB

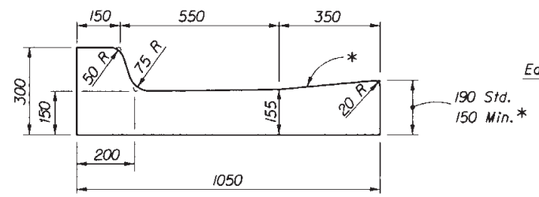

SECTION CC

VALLEY GUTTER

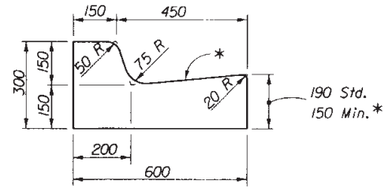

TYPE F

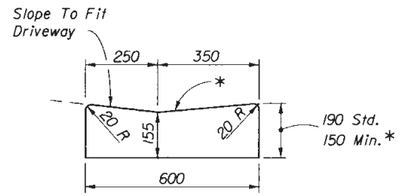

Note: To be paid for as parent curb.

DROP CURB

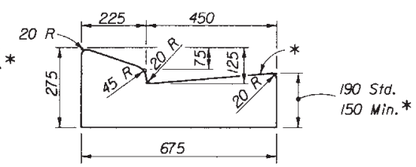

TYPE E

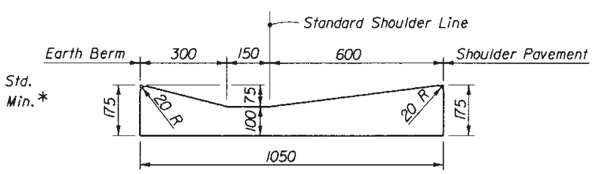

SHOULDER GUTTER

* When used on high side of roadways, the cross slope of the gutter shall match the cross slope of the adjacent pavement. The thickness of the lip shall be 150 mm, unless otherwise shown on plans.

Note: For use adjacent to concrete or flexible pavement.
For details depicting usage adjacent to flexible pavement, see diagram right.
Expansion joint, preformed joint filler and joint seal are required between curb & gutter and concrete pavement only, see diagram right.

CONCRETE CURB AND GUTTER

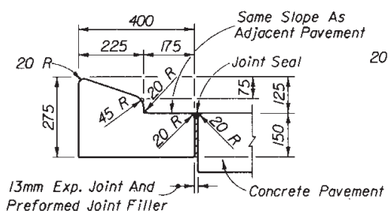

For details depicting usage adjacent to flexible pavement, see diagram right.

TYPE A

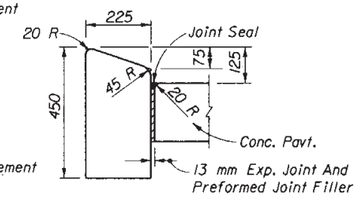

TYPE B

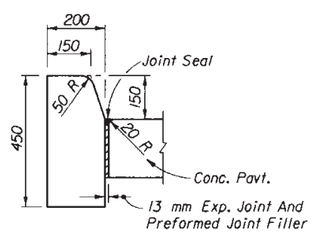

TYPE D

Note: For use adjacent to concrete or flexible pavement, concrete shown.
Expansion joint, preformed joint filler and joint seal are required between curbs and concrete pavement only, see diagram right.

CONCRETE CURB

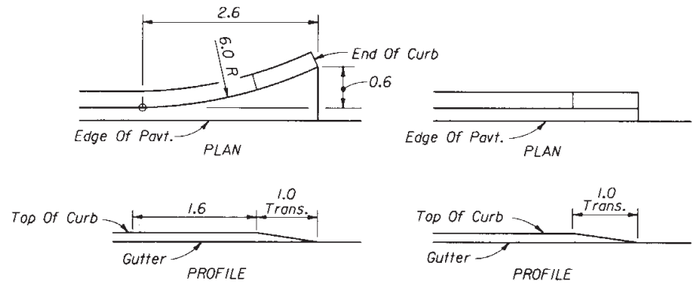

FLARED END

STRAIGHT END

CURB TYPE A

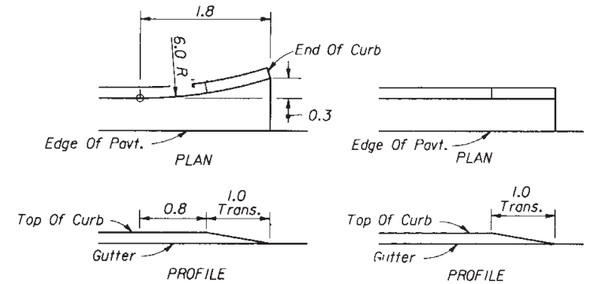

FLARED END

STRAIGHT END

CURB AND GUTTER TYPES E & F

CURB AND GUTTER ENDINGS

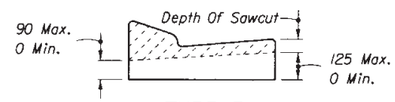

TYPE E

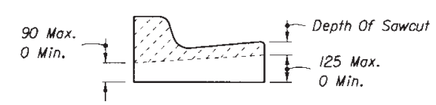

TYPE F

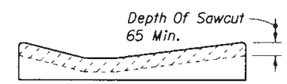

SHOULDER GUTTER

Sawcuts should be avoided within valley gutter and within curb and gutter endings.

CONTRACTION JOINT IN CURB AND GUTTER

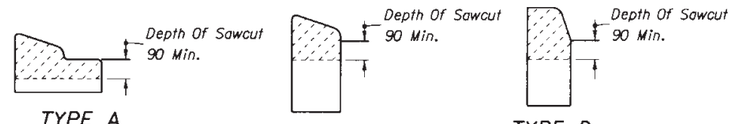

TYPE A

TYPE B

TYPE D

CONTRACTION JOINT IN CURB

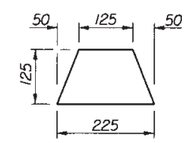

ASPHALTIC CONCRETE CURB

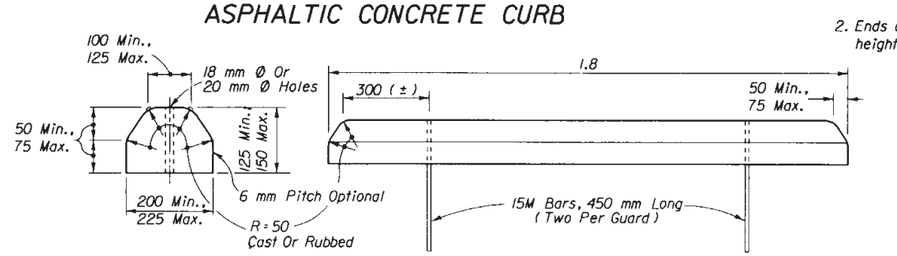

CONCRETE BUMPER GUARD

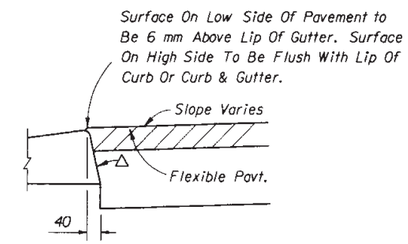

△ Applies to both high and low sides of pavement, low side shown.
Applies to shoulder gutter only where adjoining traffic lanes.

CURB AND GUTTER AND TYPE A CURB ADJACENT TO FLEXIBLE PAVEMENT

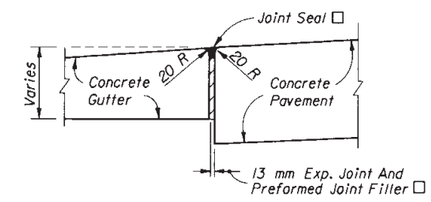

□ Applies to both high and low sides of pavement, low side shown.

EXPANSION JOINT BETWEEN GUTTER AND CONCRETE PAVEMENT

GENERAL NOTES

1. For curb, gutter and curb and gutter provide 3 mm-6 mm contraction joints at 3.0 m centers (max.). Contraction joints adjacent to concrete pavement on tangents and flat curves are to match the pavement joints, with intermediate joints not to exceed 3.0 m centers. Curb, gutter and curb & gutter expansion joints shall be located in accordance with Section 520 of the standard specifications.
2. Ends of Curbs Types B and D shall transition from full to zero heights in 1.0 m.

STATE OF FLORIDA DEPARTMENT OF TRANSPORTATION
ROAD DESIGN

CURB & CURB AND GUTTER

	Names	Dates
Designed By		
Drawn By		
Checked By		
F.H.W.A. Approved:		07/07/75

Approved By Freddie Simmons
State Roadway Design Engineer

Revision No.	Sheet No.	Index No.
94	1 of 1	300

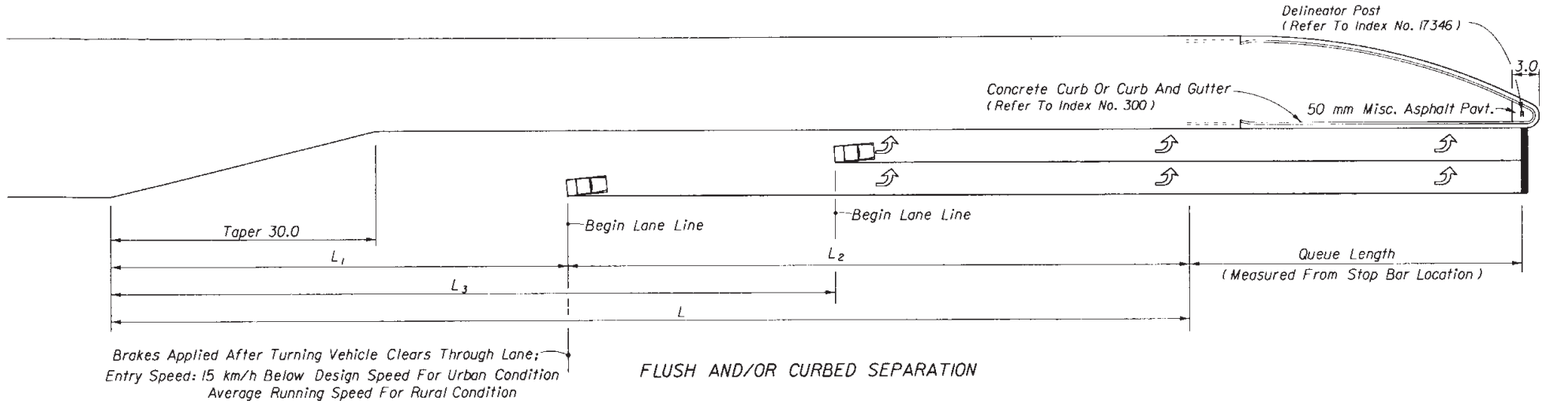

FLUSH AND/OR CURBED SEPARATION

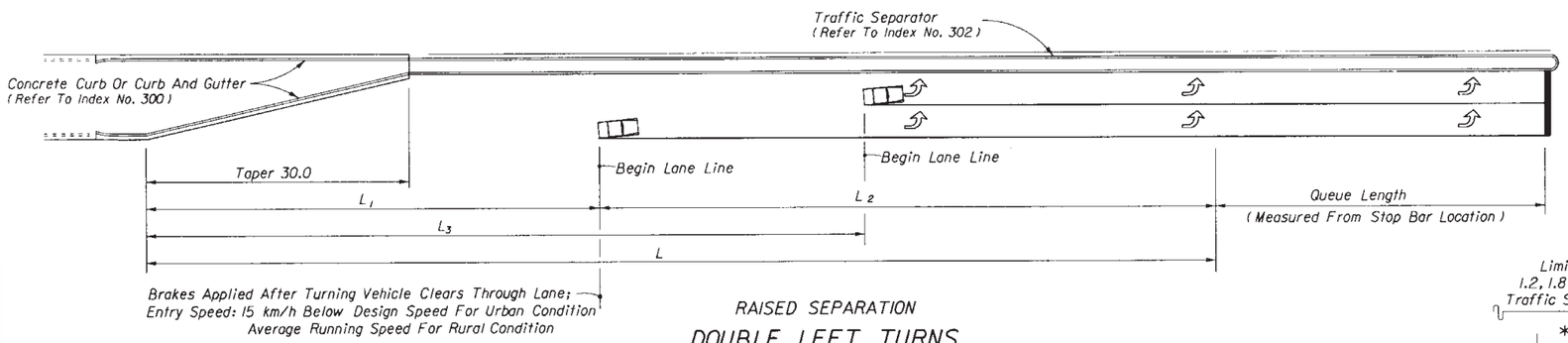

RAISED SEPARATION

DOUBLE LEFT TURNS

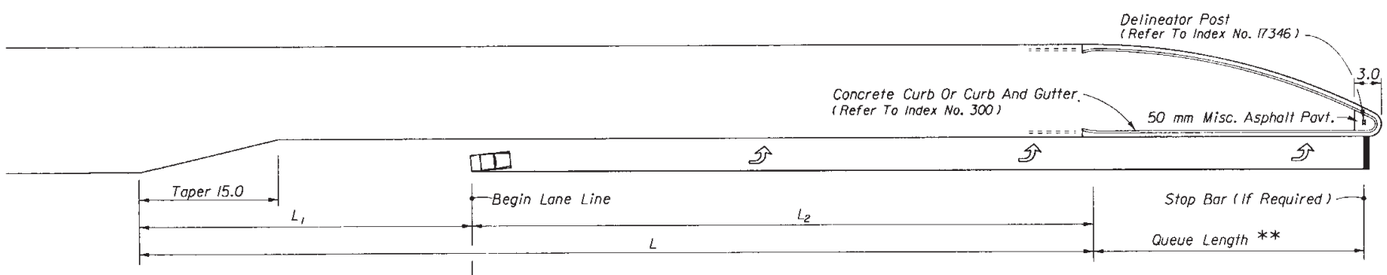

FLUSH AND/OR CURBED SEPARATION

** Queue Length Is Measured From The Median Nose Radial Point Or, When A Stop Bar Is Required, From The Stop Bar.

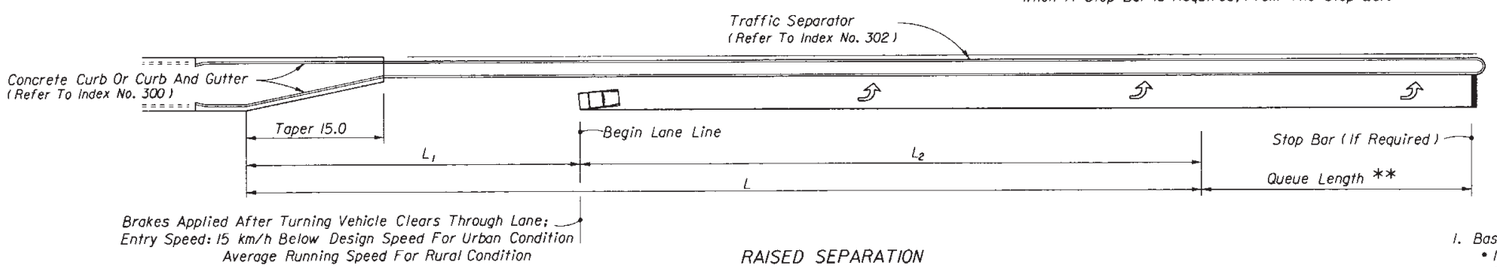

RAISED SEPARATION

SINGLE LEFT TURNS

TURN LANES

TURN LANES • CURBED AND UNCURBED MEDIANS								
			URBAN CONDITIONS			RURAL CONDITIONS		
Design Speed (km/h)	Entry Speed (km/h)	Clearance Distance L_1 (m)	Brake To Stop Distance L_2 (m)	Total Decel. Distance L (m)	Clearance Distance L_3 (m)	Brake To Stop Distance L_2 (m)	Total Decel. Distance L (m)	Clearance Distance L_3 (m)
50	35	21.0	23.0	44.0	34.0	----	----	----
60	45	24.0	23.0	47.0	37.0	----	----	----
70	55	26.0	29.0	55.0	41.0	----	----	----
80	65/70	32.0	42.0	74.0	49.0	64.0	96.0	49.0
90	77	38.0	----	----	----	78.0	116.0	59.0
100	85	44.0	----	----	----	98.0	142.0	70.0
110	91	52.0	----	----	----	116.0	168.0	82.0

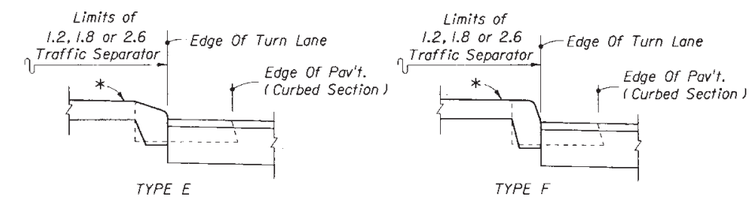

CURB AND GUTTER

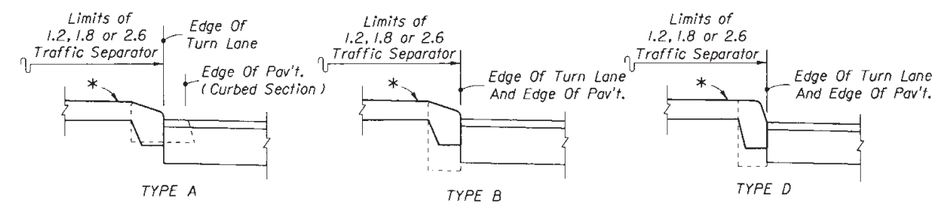

CURB

For Curb And Curb & Gutter Types, See Index No. 300

* Option I Separators Shown (Refer To Index No. 302)

MEDIAN CURB AND TRAFFIC SEPARATOR JUNCTURE DETAILS

GENERAL NOTES

1. The plan views shown are for turn lane taper shapes and dimensional purposes only, they do not prescribe the use of curb, curb and gutter, shoulders nor separators specifically to either rural or urban conditions.
2. Total deceleration distances must not be reduced except where lesser values are imposed by unrelocatable control points.
3. Right turn lane tapers and distances identical to left turn lanes under stop control conditions. Right turn lane tapers and/or distances are site specific under free flow or yield conditions.
4. These left turn configurations apply to continuous left turn lanes only where specifically called for in the plans.
5. For pavement markings see Index No. 17346.

DESIGN NOTES

1. Basis for turn lane configurations:
   - Informed Driver.
   - Stop condition (With Or Without Stop Control).
   - Wet Pavement.
   - Reaction preceeding entry point.
   - Maximum safe decelerarion rates for urban conditions.
   - Comfortable deceleration rates for rural conditions.

STATE OF FLORIDA DEPARTMENT OF TRANSPORTATION
ROAD DESIGN

TURN LANES

	Names	Dates
Designed By	RER	05/91
Drawn By	HSD/HKH	05/91
Checked By	JVG/RER	05/91

Approved By Freddie Simmons
State Roadway Design Engineer

Revision No.	Sheet No.	Index No.
94	1 of 1	301

F.H.W.A. Approved:

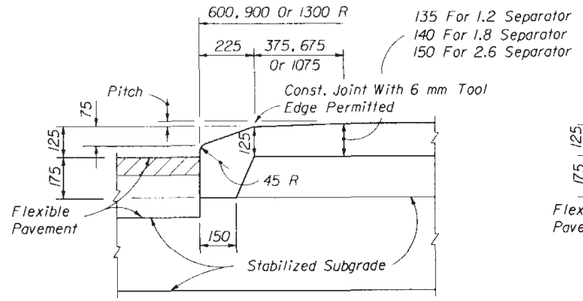

LONGITUDINAL SECTION (NOSE)

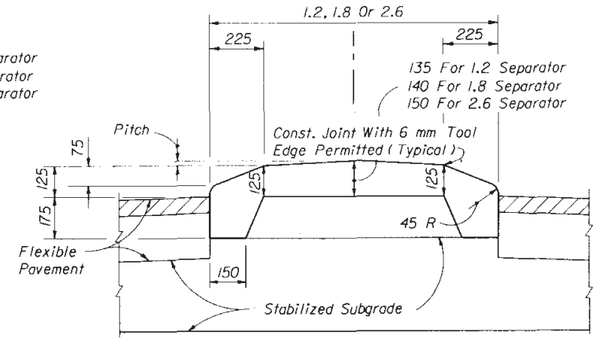

TRANSVERSE SECTION

OPTION I

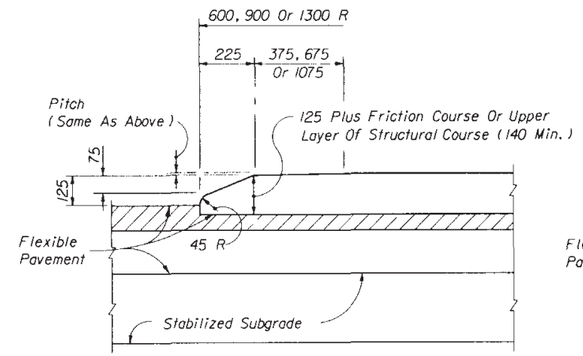

LONGITUDINAL SECTION (NOSE)

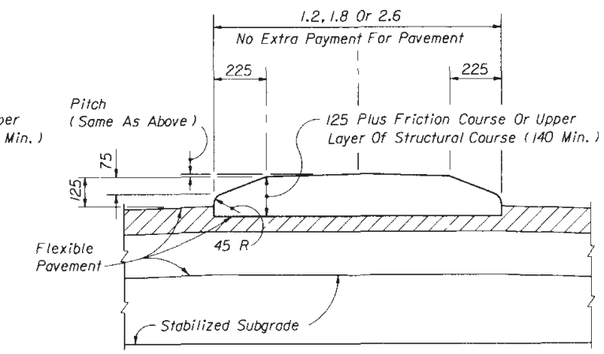

TRANSVERSE SECTION

OPTION II

TYPE I CONCRETE TRAFFIC SEPARATOR

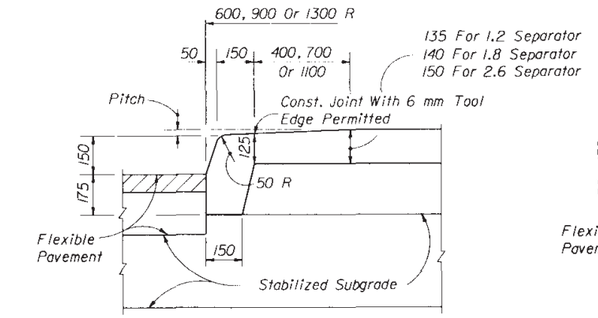

LONGITUDINAL SECTION (NOSE)

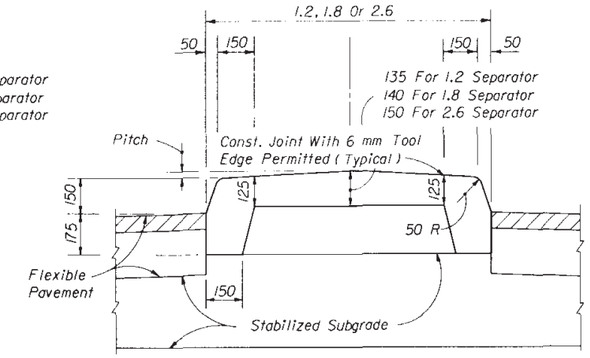

TRANSVERSE SECTION

OPTION I

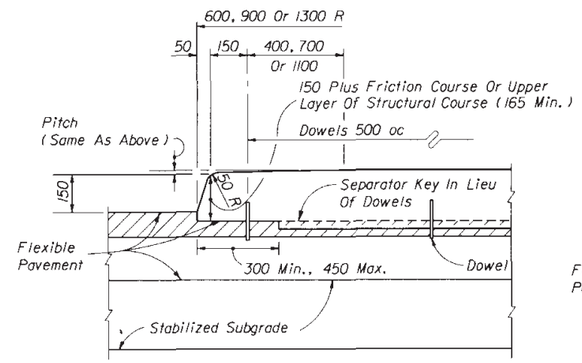

LONGITUDINAL SECTION (NOSE)

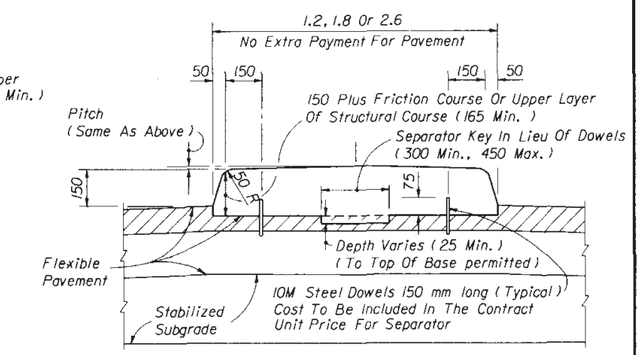

TRANSVERSE SECTION

OPTION II

TYPE IV CONCRETE TRAFFIC SEPARATOR

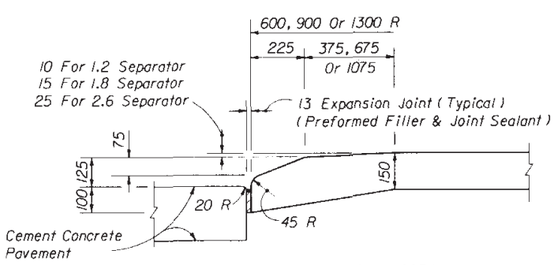

LONGITUDINAL SECTION (NOSE)

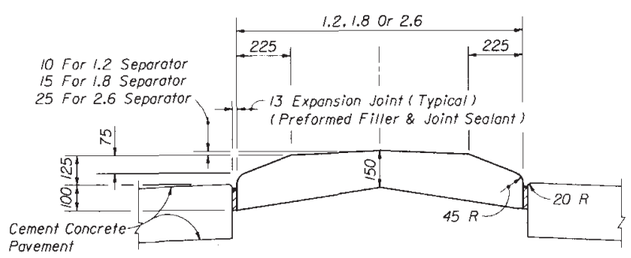

TRANSVERSE SECTION

TYPE II CONCRETE TRAFFIC SEPARATOR

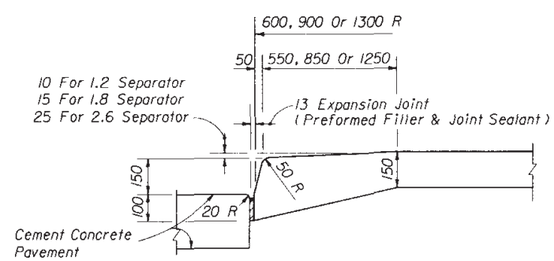

LONGITUDINAL SECTION (NOSE)

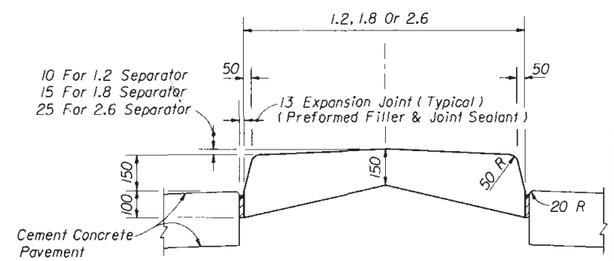

TRANSVERSE SECTION

TYPE V CONCRETE TRAFFIC SEPARATOR

NOTES

1. Separators Type I and IV are to be used with flexible pavement. Separators Types II and V are to be used with rigid pavement.
2. Either Option I or Option II may be used for Types I and IV separators except when a specific option is called for in the plans.
3. For all separators provide 3 mm - 6 mm contraction joints at 3.0 m centers (max.). Contraction joints adjacent to concrete pavement on tangents and flat curves are to match the pavement joints, with intermediate joints not to exceed 3.0 m centers.
4. Separators having widths of 1.2 m, 1.8 m or 2.6 m shall be paid for under the contract unit price for Traffic Separator Concrete (Type __) (__ m Wide), MI. Separators having widths other than 1.2 m, 1.8 m or 2.6 m shall be detailed in the plans as special separators and paid for under the contract unit price for Traffic Separator Concrete (Special), M2.

STATE OF FLORIDA DEPARTMENT OF TRANSPORTATION
ROAD DESIGN

TRAFFIC SEPARATORS

	Names	Dates
Designed By		
Drawn By	HSD	09/81
Checked By	JVG	09/81
F.H.W.A. Approved:		09/23/82

Approved By Freddie Simmons
State Roadway Design Engineer

Revision No.	Sheet No.	Index No.
94	1 of 1	302

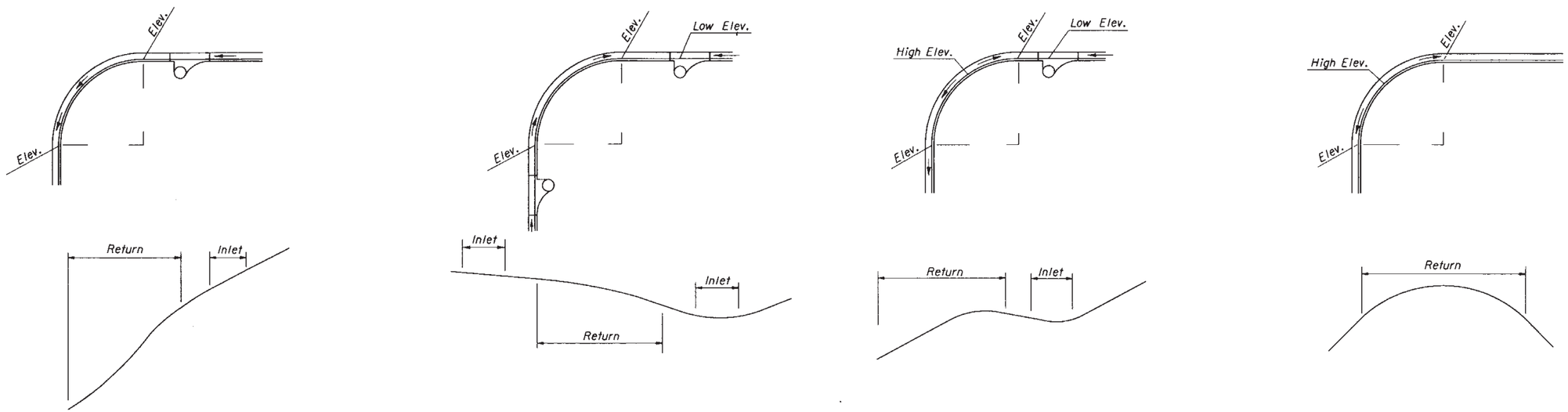

Note:

Profile grades should be established that will allow inlets to be located outside the return whenever practical. Inlets should be located to avoid conflict with pedestrian movement. Special care must be exercised to prevent conflict with public sidewalk curbed ramps for the disabled. For information on public sidewalk curbed ramps refer to Index No. 304.

SHOWING LOCATION OF INLETS ON RETURN

TYPICAL RETURN PROFILES

STATE OF FLORIDA DEPARTMENT OF TRANSPORTATION
ROAD DESIGN

CURB RETURN PROFILES

	Names	Dates	Approved By Freddie Simmons Staff Design Engineer, Roadways		
Designed By					
Drawn By					
Checked By			Revision No.	Sheet No.	Index No.
F.H.W.A. Approved:		07/07/75	94	1 of 1	303

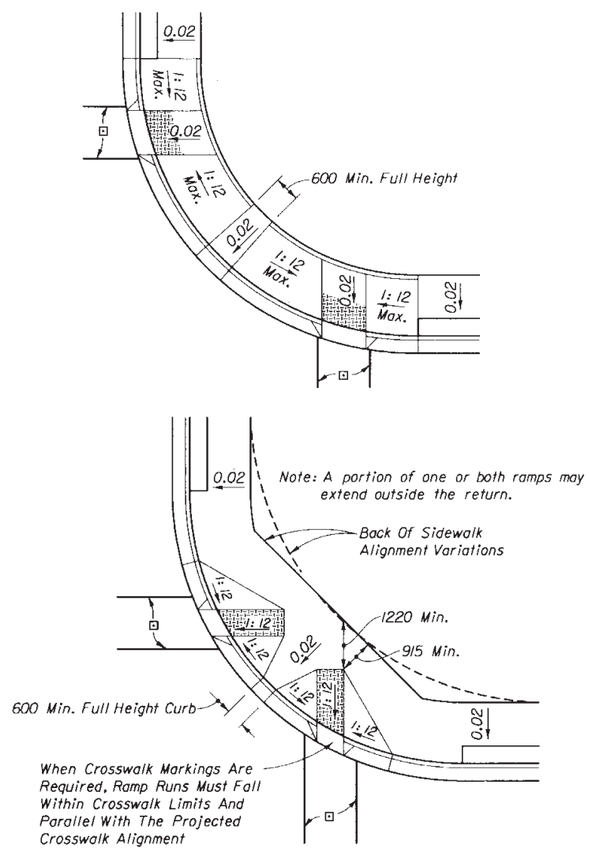

⊡ Crosswalk widths and configuration vary; must conform to Traffic Design Standards.

TYPICAL PLACEMENT OF PUBLIC SIDEWALK CURB RAMPS AT CURBED RETURNS

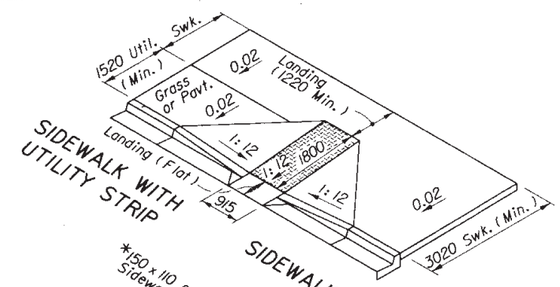

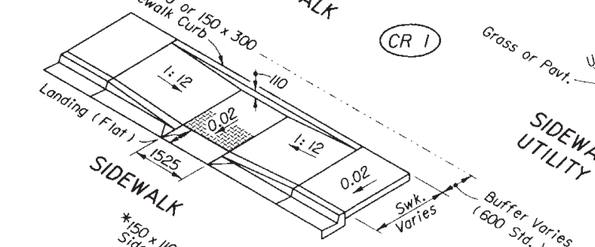

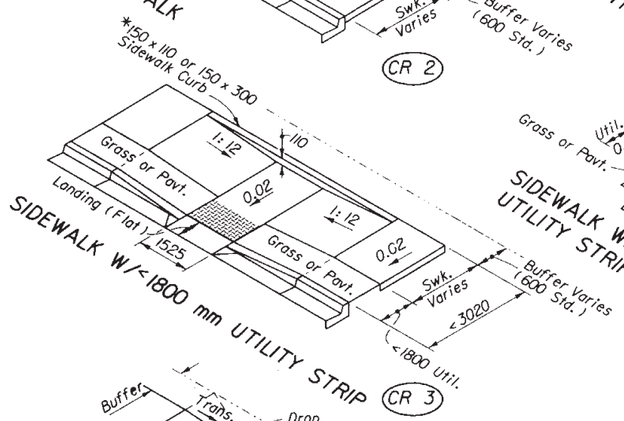

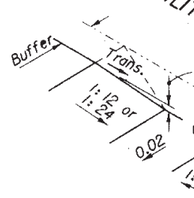

*BACK OF SIDEWALK CURB IN ABSENCE OF ADEQUATE BUFFER OR ABUTTING STRUCTURE

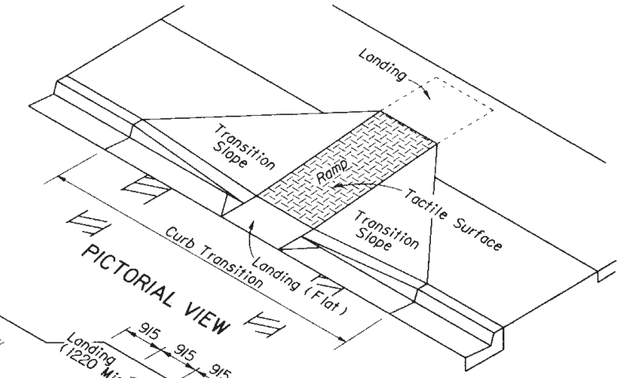

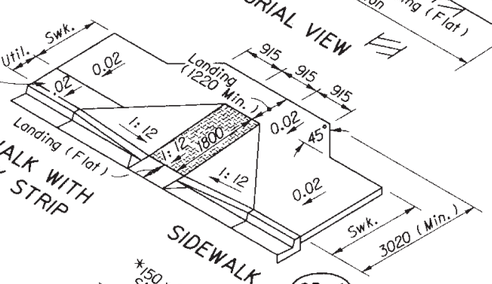

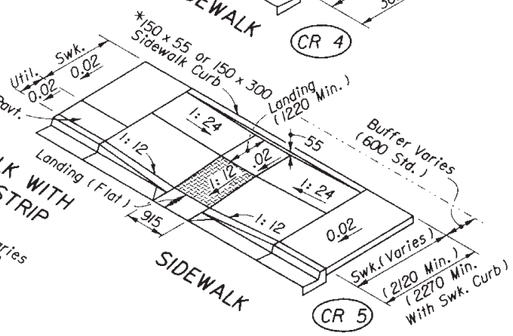

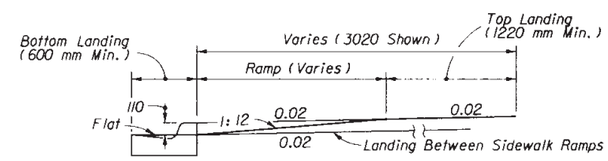

SECTION THROUGH RAMP RUN AND LANDINGS

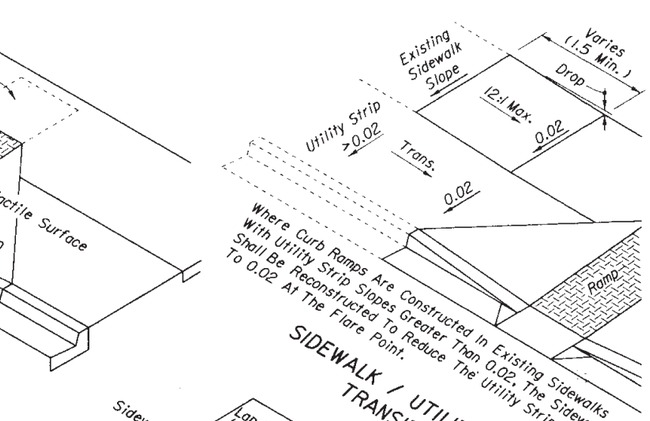

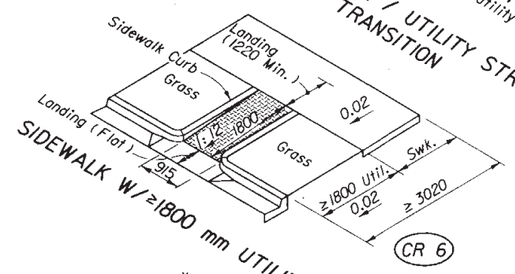

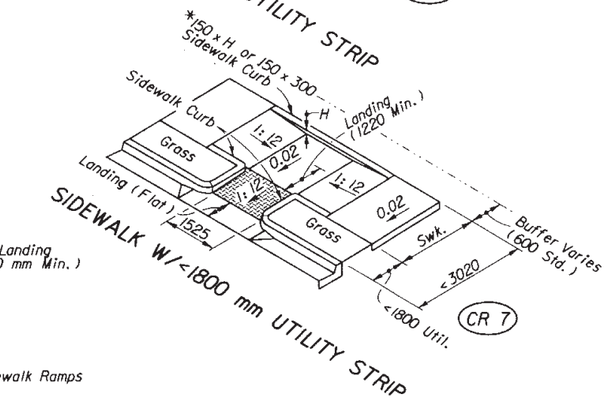

DIMENSIONAL FEATURES FOR PUBLIC SIDEWALK CURB RAMPS

GENERAL NOTES

1. Public sidewalk curb ramps shall be constructed in the public right of way at locations that will provide continuous unobstructed pedestrian circulation paths to pedestrian areas, elements and facilities in the public right of way and to accessible pedestrian routes on adjacent sites. Curbed facilities with sidewalks and those without sidewalks are to have curb ramps contructed at all street intersections and at turnouts that have curbed returns. Partial curb returns shall extend to the limit prescribed by Index No. 515 to accommodate curb ramps. Ramps constructed at locations without sidewalks shall have a landing constructed at the top of each ramp, see Sheet 3 of 3.

2. The location and orientation of curb ramps shall be as shown in the plans.

3. Curb ramp running slopes shall not exceed 1:12 and cross slope shall not exceed 0.02.

   When altering existing pedestrian facilities where existing site development precludes the accomodation of a ramp slope of 1:12, a running slope between 1:12 and 1:10 is permitted for a rise of 150 mm maximum and a running slope of between 1:10 and 1:8 is permitted for a rise of 75 mm maximum. Where compliance with the requirements for cross slope cannot be fully met, the minimum feasable cross slope shall be provided.

4. If a curb ramp is located where pedestrians must walk across the ramp, then the walk shall have transition slopes to the ramp; the maximum slope of the transitions shall be 1:12. Curb ramps with returned curbs may be used where pedestrians would not normally walk across the ramp, see Sheet 2 of 3.

5. When curb ramps abut the back of curb a tactile surface shall be applied to the full width and length of the ramp. When landings abut the back of curb the tactile surface shall extend full width and 915 mm back of the curb. Tactile surfaces shall be constructed by texturing to a depth not exceeding 3 mm by use of a tamp or roller fabricated with an imprinting surface of either 25 mm mesh 6 mm wire cloth (plain weave, conventional crimp), #6 expanded metal (standard) or 1.4 kg expanded metal grating. Transition slopes are not to have tactile surfaces. Detectable surface requirements have been suspended. If reinstated the detectable surface requirements will replace the tactile surface requirements and notice will be by special provision.

6. Where a curb ramp is constructed within existing curb, curb and gutter and/or sidewalk, the existing curb or curb and gutter shall be removed to the nearest joint beyond the curb transitions or to the extent that no remaining section of curb or curb and gutter is less than 1.5 m long. The existing sidewalk shall be removed to the neareast joint beyond the transition slope or walk around or to the extent that no remaining section of sidewalk is less than 1.5 m long.

7. Alpha-numeric identifications are for reference (plans, permits, etc.).

8. Public sidewalk curb ramps are to be paid for as follows:
   Ramps, reconstructed sidewalks, walk around sidewalks, sidewalk landings and sidewalk curbs are to be paid for under the contract unit price for Sidewalk Concrete, (__ mm), M2. Curb transitions and reconstructed curbs are to be paid for under the contract unit price for the parent curb, i.e., Curb Conc., (Type __), M1 or Curb and Gutter Conc., (Type __), M1.

   When a seperate pay item for the removal and disposal of existing curb, curb and gutter, and/or sidewalk is not provided in the plans, the cost of removal and disposal of these features shall be included in the contract unit price for new curb, curb and gutter and/or sidewalk respectively.

DESIGN NOTE

1. Special attention must be directed to lower landing drainage (return profiles; number of inlets; inlet types and inlet locations).

STATE OF FLORIDA DEPARTMENT OF TRANSPORTATION
ROAD DESIGN

PUBLIC SIDEWALK CURB RAMPS

	Names	Dates
Designed By	STAFF	10/94
Drawn By	HKH	10/94
Checked By	JVG	10/94

Approved By Freddie Simmons
State Roadway Design Engineer

F.H.W.A. Approved:	Revision No.	Sheet No.	Index No.
	94	1 of 3	304

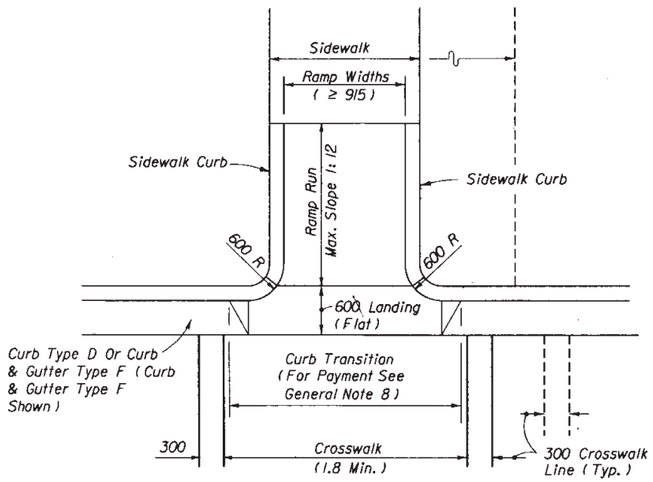

CR 8

PLAN VIEW

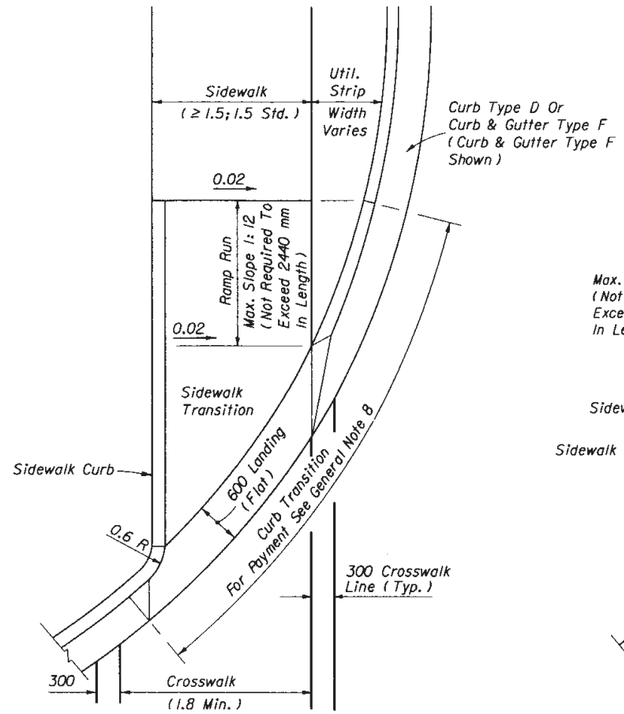

CR 9

PLAN VIEW

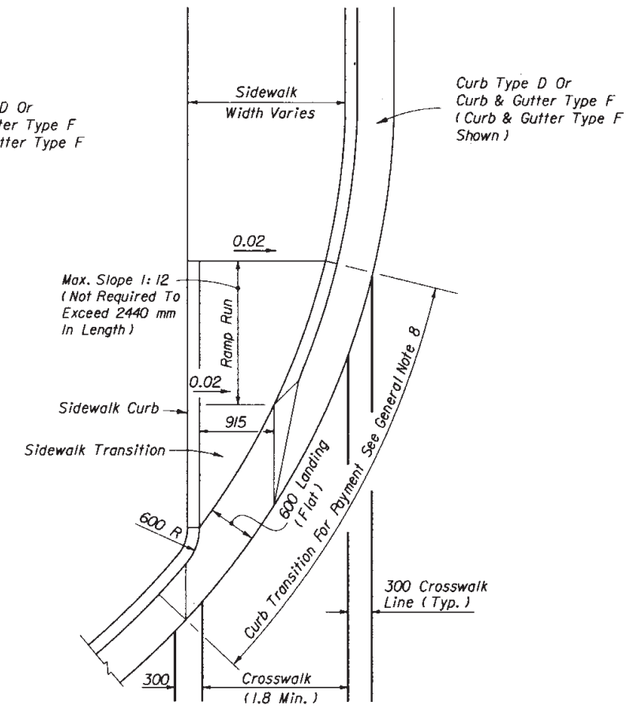

CR 10

PLAN VIEW

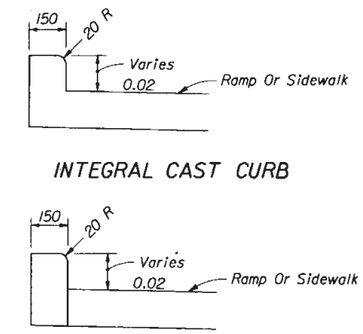

RAMP AND SIDEWALK CURB OPTIONS

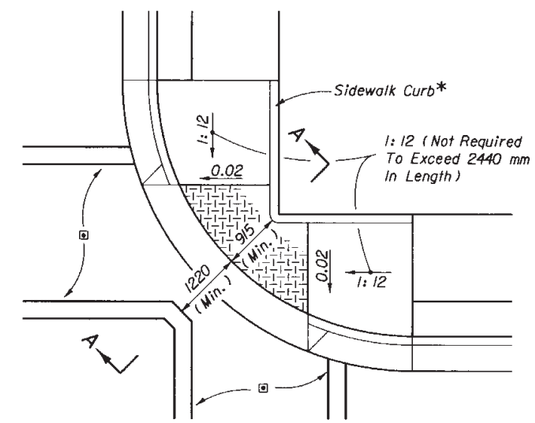

PLAN

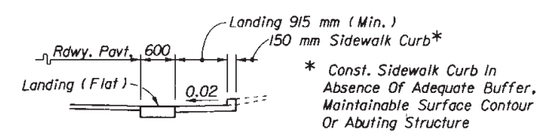

SECTION AA

CR 11

DIAGONAL RAMPS FOR CONDITION OF INFEASIBILITY

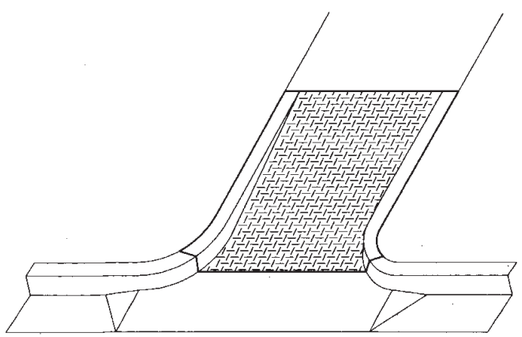

PICTORIAL VIEW

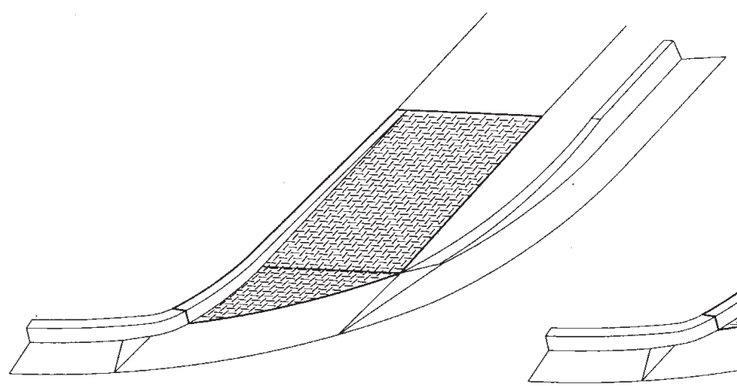

PICTORIAL VIEW

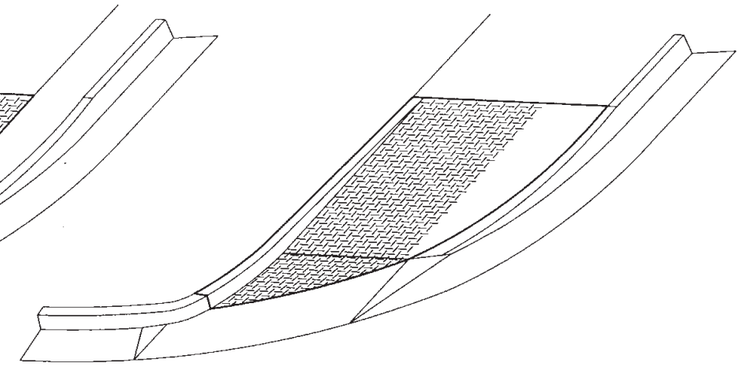

PICTORIAL VIEW

RAMPS FOR LINEAR PEDESTRIAN TRAFFIC

STATE OF FLORIDA DEPARTMENT OF TRANSPORTATION
ROAD DESIGN

PUBLIC SIDEWALK CURB RAMPS

	Names	Dates
Designed By	STAFF	10/94
Drawn By	HKH	10/94
Checked By	JVG	10/94
F.H.W.A. Approved:		02/08/79

Approved By Freddie Simmons
State Roadway Design Engineer

Revision No.	Sheet No.	Index No.
94	2 of 3	304

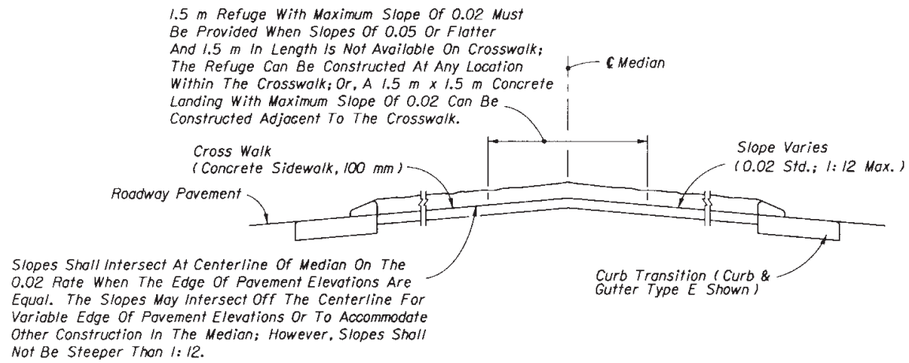

SECTION CC

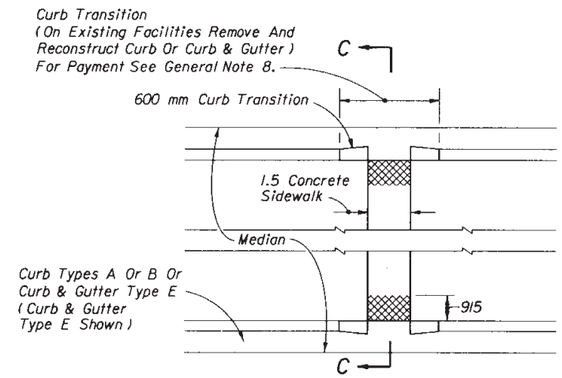

PLAN

MEDIAN CROSSWALKS

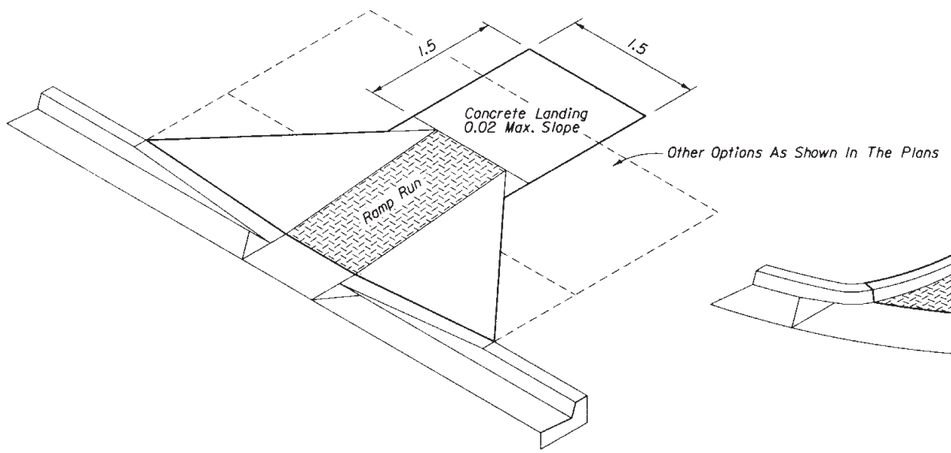

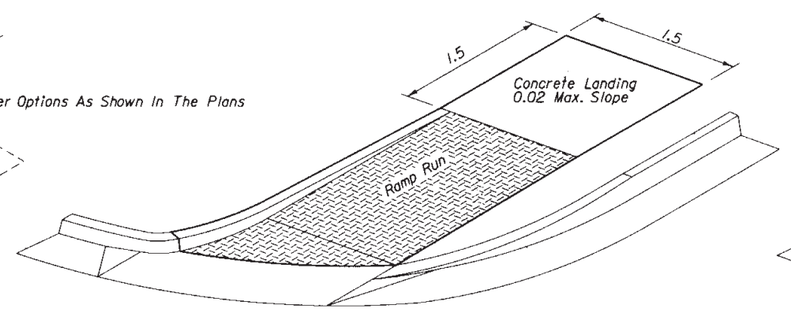

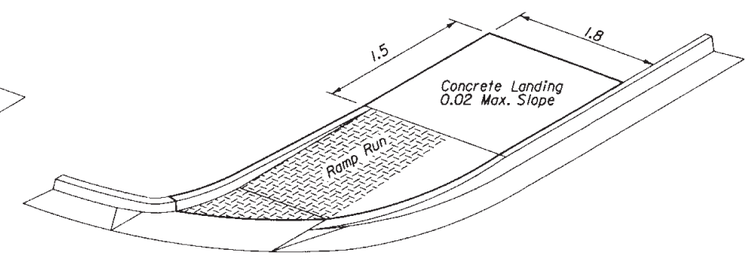

LANDINGS FOR RAMPS WITHIN PUBLIC RIGHT OF WAY CONSTRUCTED AT LOCATIONS WHERE FUTURE SIDEWALKS ARE PROPOSED, WHERE STABLE SURFACES OTHER THAN SIDEWALKS ARE PART OF A CONTINUOUS PASSAGE OR WHERE A CURB FALLS ALONG THE CIRCULATION PATH TO PEDESTRIAN ROUTES ON ADJACENT SITES

STATE OF FLORIDA DEPARTMENT OF TRANSPORTATION
ROAD DESIGN

PUBLIC SIDEWALK CURB RAMPS

	Names	Dates
Designed By	STAFF	10/94
Drawn By	HKH	10/94
Checked By	JVG	10/94
F.H.W.A. Approved:		

Approved By Freddie Simmons
State Roadway Design Engineer

Revision No.	Sheet No.	Index No.
94	3 of 3	304

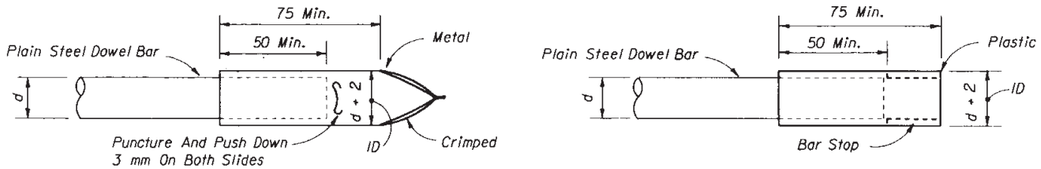

METAL OR PLASTIC CAPS FOR DOWEL BARS

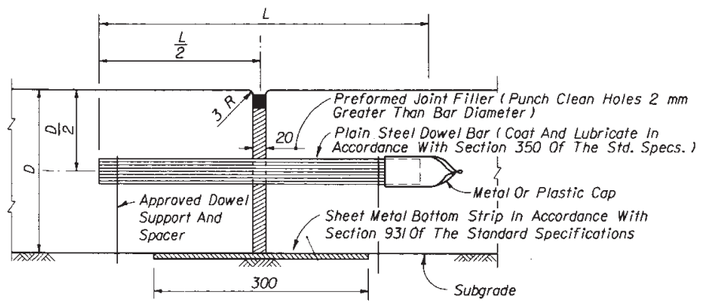

Note: Expansion joints to be placed on approaches to bridges, at street intersections and other locations indicated in detail plans.

TRANSVERSE EXPANSION JOINT

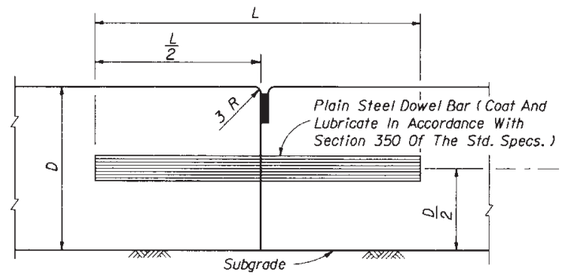

BUTT CONSTRUCTION JOINT TO BE USED AT DISCONTINUANCES OF WORK

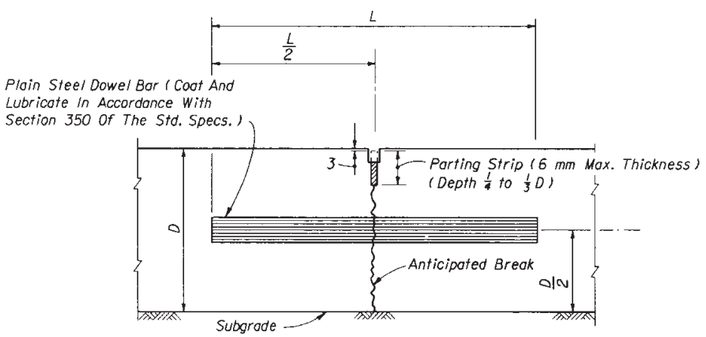

TRANSVERSE CONTRACTION JOINT, VIBRO CAST METHOD

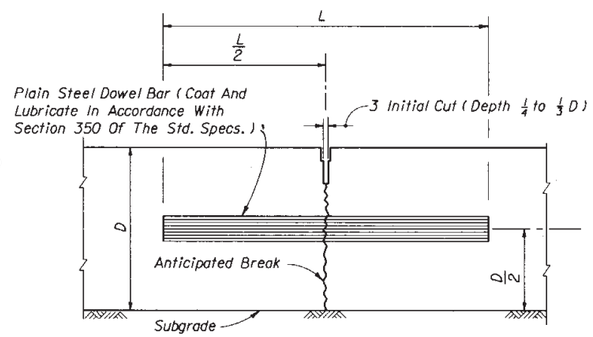

TRANSVERSE CONTRACTION JOINT, SAWED METHOD

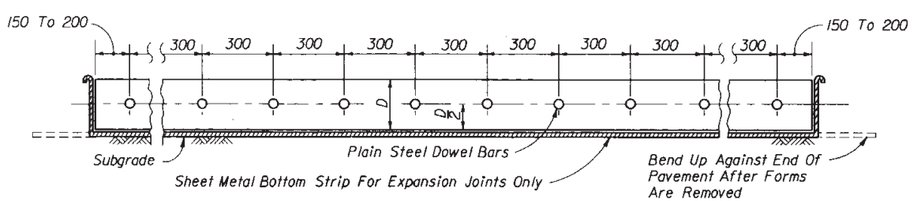

DOWEL BAR LAYOUT

DOWELS (LENGTH 450 mm)	
Pavement Thickness "D" (mm)	Diameter (mm)
150 to 170	20
180, 190	25
200+	30

TRANSVERSE JOINTS ARE TO BE SPACED AT A MAXIMUM OF 6.0 m. DOWELS ARE REQUIRED AT ALL TRANSVERSE JOINTS UNLESS OTHERWISE NOTED IN PLANS.

TRANSVERSE JOINTS

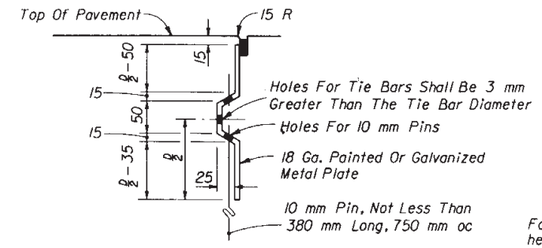

DEFORMED METAL PLATE

TIE BAR SPACING WITH MAXIMUM DISTANCE TO FREE EDGE 3.6 m		
Pavement Thickness "D" (mm)	Maximum Spacing	
	10M Bars Length 600 mm	15M Bars Length 850 mm
	Meters	
150	1.2	1.2
160	1.1	1.2
170, 180	1.0	1.2
190, 200	0.9	1.2
210 To 230	0.8	1.2
240 To 270	0.7	1.2
280 To 300	0.6	1.2
310 To 330	0.6	1.1
340 To 350	0.5	1.0

For pavement thickness or for joint spacings not covered herein refer to FDOT Jointed Plain Concrete Pavement Design Manual or Rigid Pavement Rehabilitation Manual.

Tie bars are deformed 10M or 15M reinforcing steel bars meeting the requirements of Section 931 of the Standard Specifications.

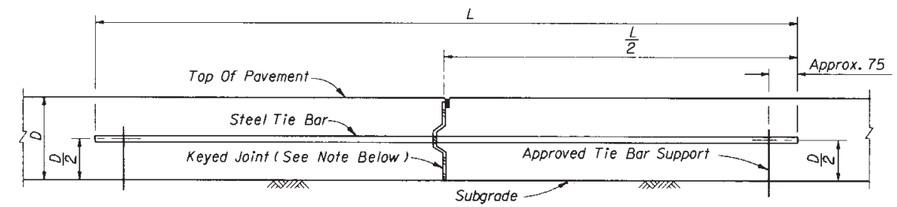

Note: Keyed longitudinal joints are required on all concrete pavement 220 mm thick or greater. The keyed joint may be formed by either the metal plate detailed above; by bolting shaped timber to the side form; or, by extrusion from slip-form paver. Alternate keyway shape and tie bar details may be approved by the Engineer.

LONGITUDINAL CONSTRUCTION JOINT

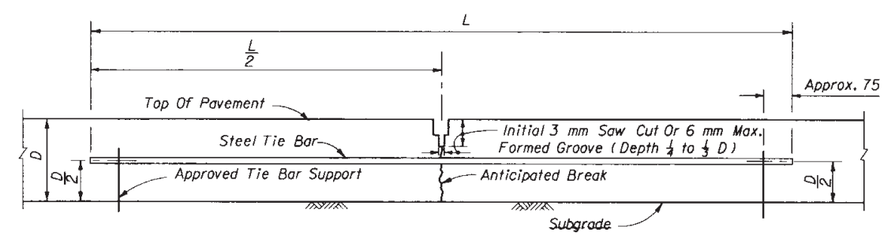

Note: Slabs poured simultaneously. Tie bars may be inserted in the plastic concrete by means approved by the Engineer.

LONGITUDINAL LANE-TIE JOINT

LONGITUDINAL JOINTS

Note: For joint seal dimensions see Sheet 2 of 5.

STATE OF FLORIDA DEPARTMENT OF TRANSPORTATION
ROAD DESIGN

CONCRETE PAVEMENT JOINTS

	Names	Dates	Approved By Bruce Dietrich, State Pavement Design Engineer		
Designed By					
Drawn By	HW	08/57			
Checked By	HEC	08/57	Revision No.	Sheet No.	Index No.
F.H.W.A. Approved:		10/01/80	94	1 of 5	305

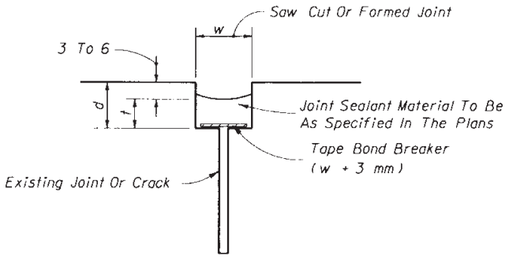

Note: Dimension w will be shown in the plans or established by the Engineer based on field conditions. Dimension d will be constructed so that the shape factor $\frac{w}{d}$ has a maximum value of 2 and a mimimum value of 1.

FOR REHABILITATION OF EXISTING JOINTS

TAPE BOND BREAKER

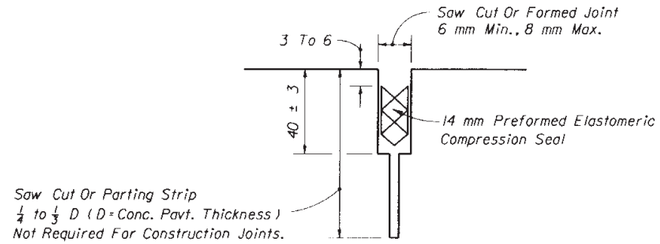

FOR NEW JOINTS

PREFORMED ELASTOMERIC COMPRESSION SEAL

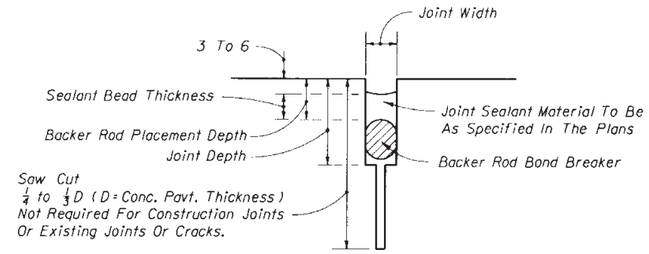

FOR NEW JOINTS AND REHABILITATION OF EXISTING JOINTS

BACKER ROD BOND BREAKER

BACKER ROD BOND BREAKER (CONCRETE-CONCRETE JOINTS)				
JOINT DIMENSIONS (mm)				
JOINT WIDTH	SEALANT BEAD THICKNESS	BACKER ROD DIAMETER	MINIMUM JOINT DEPTH	BACKER ROD PLACEMENT DEPTH
6	6	10	25	13
10	6	13	31	13
13	6	16	31	13
16	8	20	38	14
20	10	25	45	16
23	12	28	45	17
25	12	31	50	20
>25	12	31+	50+	20

Unless otherwise indicated on the plans the joint width for new construction will be 6 mm for construction joints, 10 mm for all other joints.

For rehabilitaion projects the joint width will be shown on the plans or established by the Engineer based on field conditions.

CONCRETE-CONCRETE JOINTS

d = w = 20 mm Unless Specified Otherwise In The Plans

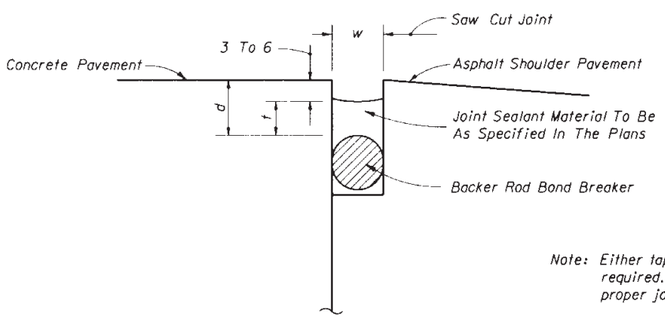

Note: Either tape or backer rod bond breaker required. Shoulder must be repaired if proper joint shape can not be attained.

BACKER ROD BOND BREAKER

d = w = 20 mm Unless Specified Otherwise In The Plans

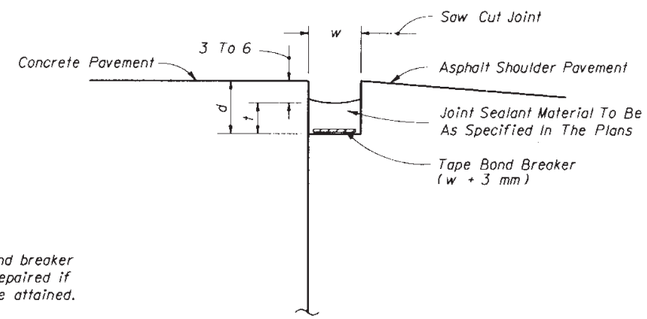

TAPE BOND BREAKER

FOR NEW JOINTS AND REHABILITATION OF EXISTING JOINTS

CONCRETE-ASPHALT SHOULDER JOINTS

JOINT SEAL DIMENSIONS

STATE OF FLORIDA DEPARTMENT OF TRANSPORTATION
ROAD DESIGN

CONCRETE PAVEMENT JOINTS

	Names	Dates
Designed By	WNL	05/86
Drawn By	HSD	05/86
Checked By	JVG	05/86
F.H.W.A. Approved:		11/07/86

Approved By Bruce Dietrich
State Pavement Design Engineer

Revision No.	Sheet No.	Index No.
94	2 of 5	305

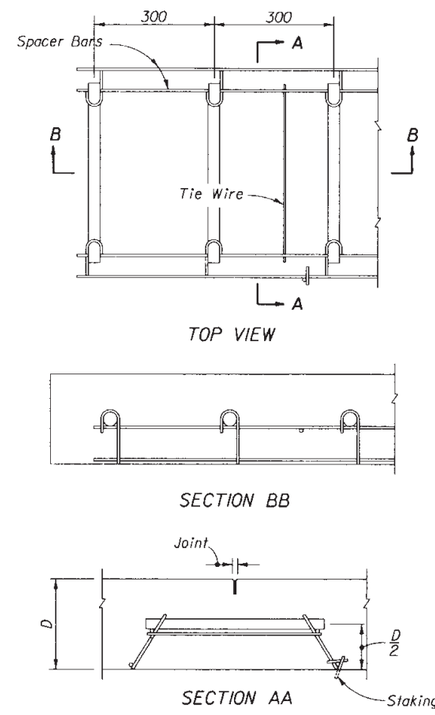

CONTRACTION ASSEMBLY

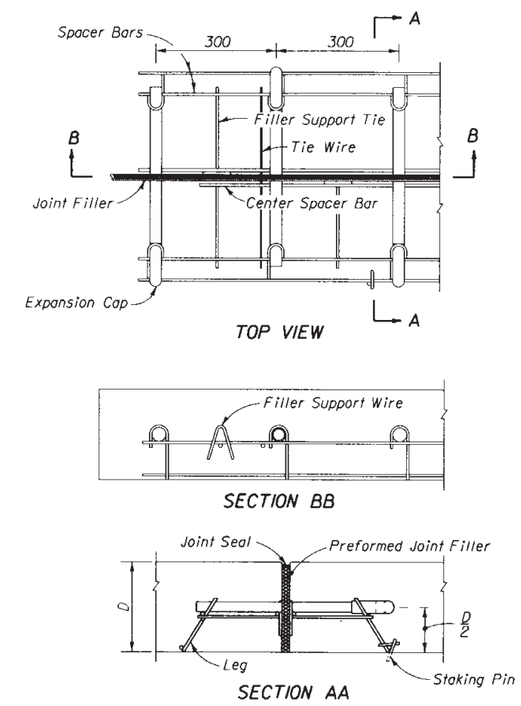

EXPANSION ASSEMBLY

Note:
Proprietary contraction and expansion assemblies may be used. Shop drawings must be submitted to the Office Of Construction, Products Evaluation Section for approval.

STATE OF FLORIDA DEPARTMENT OF TRANSPORTATION
ROAD DESIGN

CONCRETE PAVEMENT JOINTS

	Names	Dates
Designed By	HMD	07/97
Drawn By	HSD	07/94
Checked By	HMD	07/97

Approved By Bruce Dietrich
State Pavement Design Engineer

F.H.W.A. Approved:	Revision No.	Sheet No.	Index No.
	94	3 of 5	305

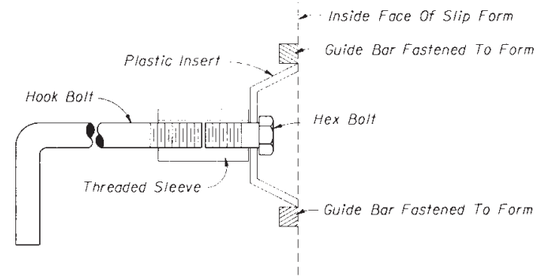

NOTE: After the concrete has set to the extent that the Keyway will retain its shape, the hex bolt and plastic insert shall be removed. The remaining portion of the hook bolt assembly shall be installed immediately prior to placing of concrete in the adjacent lane.

ALTERNATE KEYWAY AND HOOK BOLT

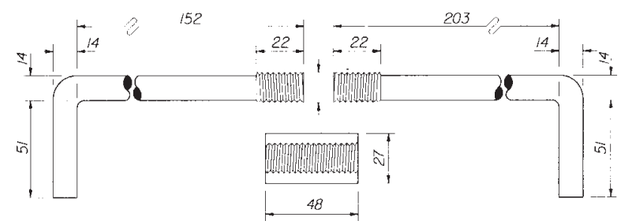

Anchor bolts shall be Grade C in accordance with ASTM A 307.

Threaded sleeves shall develop the full strength of the bolt and meet the material and thread requirements of ASTM A 563.

STEEL HOOK BOLT ASSEMBLY

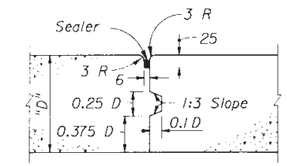

DETAIL OF KEYED JOINT

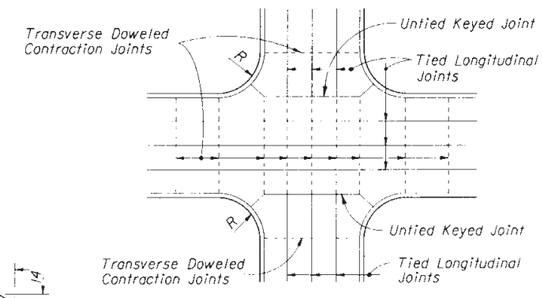

JOINT LAYOUT AT THRU INTERSECTION

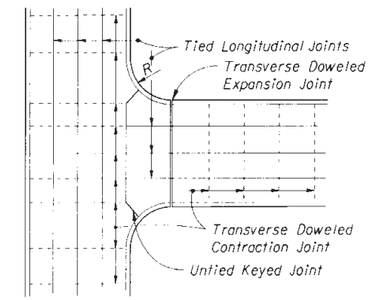

JOINT LAYOUT AT 'T' INTERSECTIONS

NOTES

1. Longitudinal joints will not be required for single lane pavement 4.2 m or less in width. For entrance and exit ramp joint details, see sheet 5 of 5.
2. When pavement width necessitates five or more longitudinal joints which would normally be tied, provide one or more untied but keyed joints. No joint shall be tied that is more than 7.2 m from a free edge or free joint including tied rigid shoulders.
3. Arrangement of longitudinal joints are to be as directed by the Engineer.
4. All manholes, meter boxes and other projections into the pavement shall be boxed-in with 13 mm preformed expansion joint material.

DETAIL OF JOINT ARRANGEMENT

STATE OF FLORIDA DEPARTMENT OF TRANSPORTATION
ROAD DESIGN

CONCRETE PAVEMENT JOINTS

	Names	Dates
Designed By	HMD	07/94
Drawn By	HSD	07/94
Checked By	HMD	07/94
F.H.W.A. Approved:		10/07/80

Approved By Bruce Dietrich
State Pavement Design Engineer

Revision No.	Sheet No.	Index No.
94	4 of 5	305

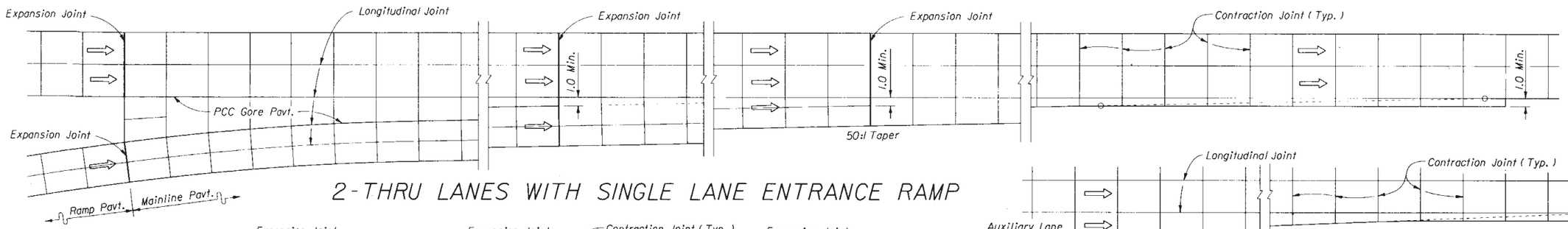

2-THRU LANES WITH SINGLE LANE ENTRANCE RAMP

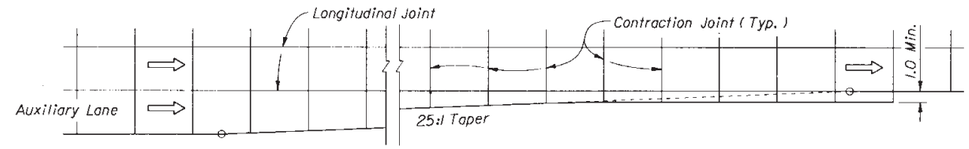

ENTRANCE TAPER WITH AUXILIARY LANE

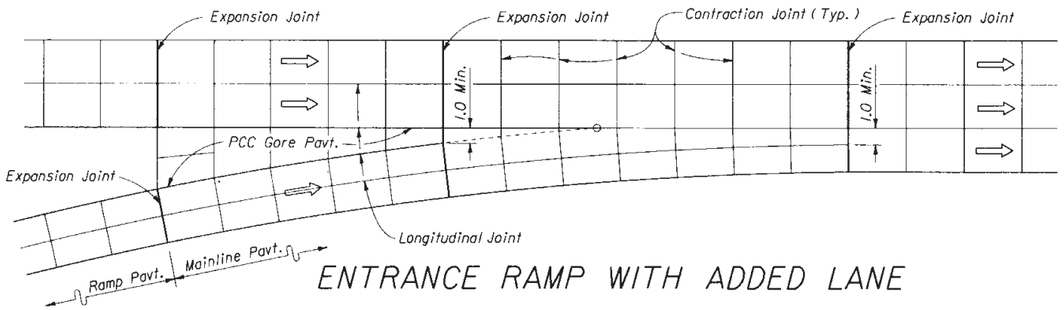

ENTRANCE RAMP WITH ADDED LANE

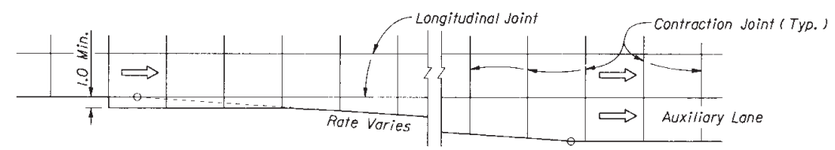

EXIT TAPER WITH AUXILIARY LANE

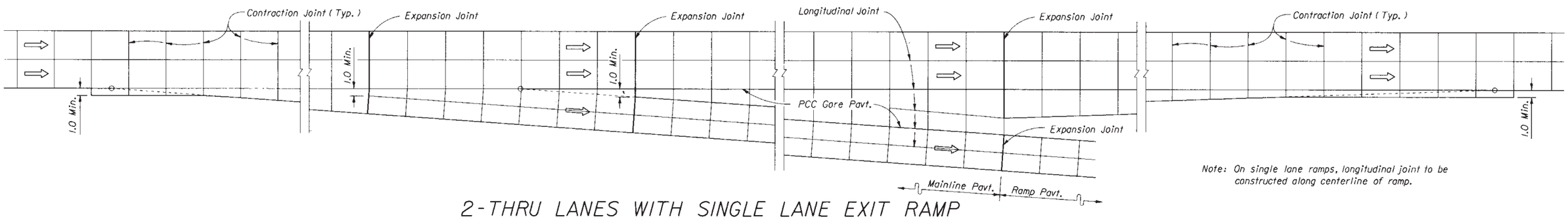

Note: On single lane ramps, longitudinal joint to be constructed along centerline of ramp.

2-THRU LANES WITH SINGLE LANE EXIT RAMP

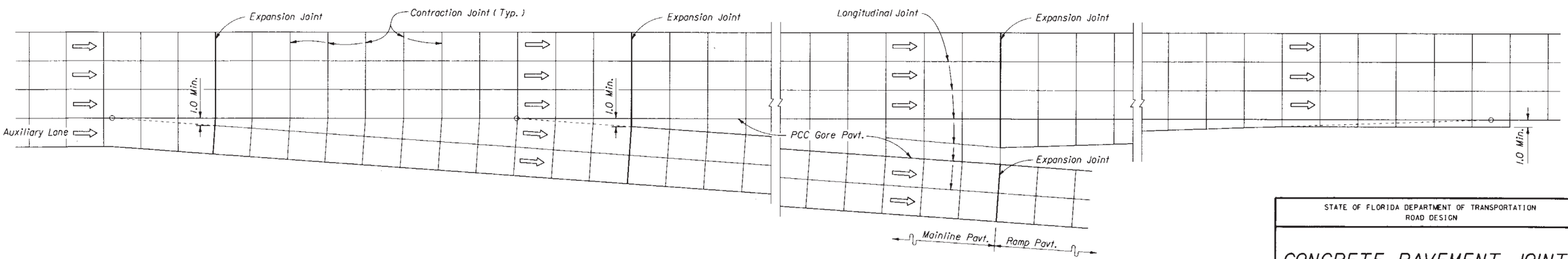

3-THRU LANES WITH AUXILIARY LANE AND 2-LANE EXIT RAMP

JOINT LAYOUT AT ENTRANCE AND EXIT RAMP TERMINALS

STATE OF FLORIDA DEPARTMENT OF TRANSPORTATION
ROAD DESIGN

CONCRETE PAVEMENT JOINTS

	Names	Dates
Designed By	HKH/BTD	11/91
Drawn By	HKH	11/91
Checked By	WNL	11/91

Approved By: Bruce Dietrich
State Pavement Design Engineer

F.H.W.A. Approved:	Revision No.	Sheet No.	Index No.
	94	5 of 5	305

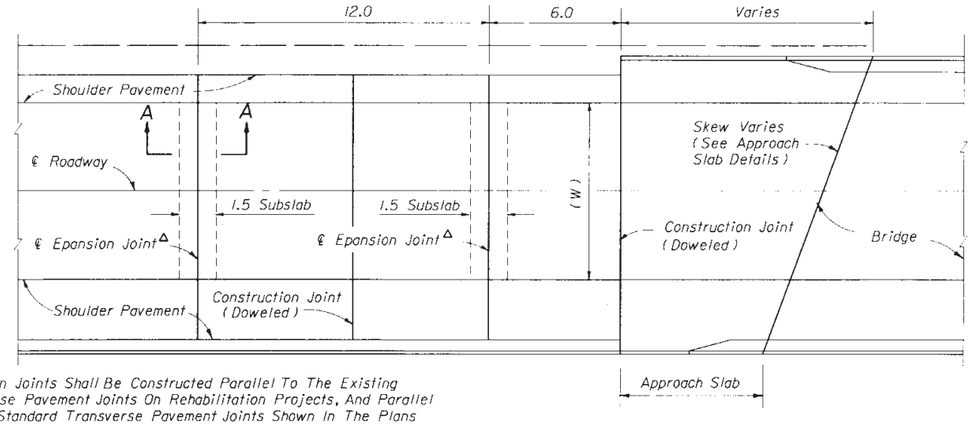

△Expansion Joints Shall Be Constructed Parallel To The Existing Transverse Pavement Joints On Rehabilitation Projects, And Parallel To The Standard Transverse Pavement Joints Shown In The Plans For New Construction.

PLAN

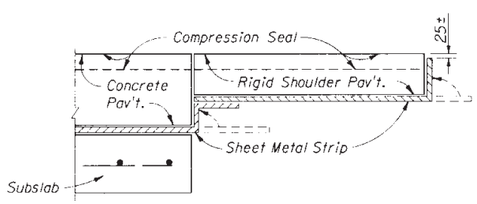

WITH RIGID SHOULDER PAVEMENT

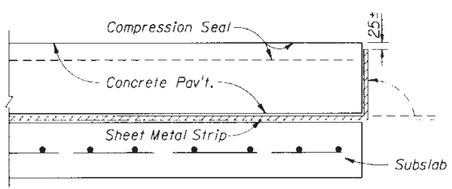

WITH GRASSED SHOULDER OR FLEXIBLE SHOULDER PAVEMENT

Note: Immediately prior to placing the seal, the joint shall be thoroughly cleaned of all foreign material. Immediately after the seal is placed, sheet metal strip shall be bent up against the pavement edge.

The sheet metal strip shall be a minimum 16 gage steel, 0.3 m wide and shall be galvanized in accordance with ASTM A-526, Coating Designation G90.

Rigid shoulder pavement shall be concrete or econcrete as called for in the plans.

DETAIL SHOWING SHEET METAL STRIP

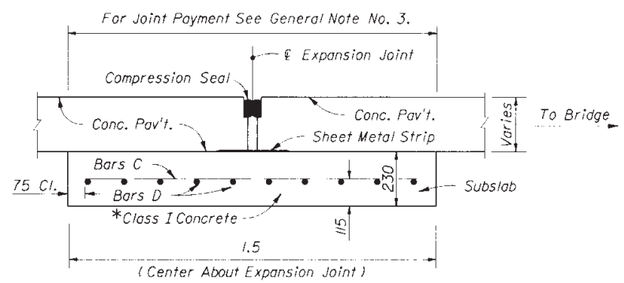

REINFORCING STEEL				
Mark	Size	Spac.	No. Req.	Lgth.
C	15M	150	Varies	1.35 m
D	15M	150	10	W Minus 75 mm

*Finish surface smooth. Cure with heavy coating of wax base white pigmented curing compound. Apply second application immediately prior to placing pavement.

SECTION AA

EXPANSION JOINT

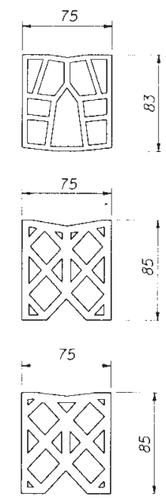

OPTIONAL SEALS

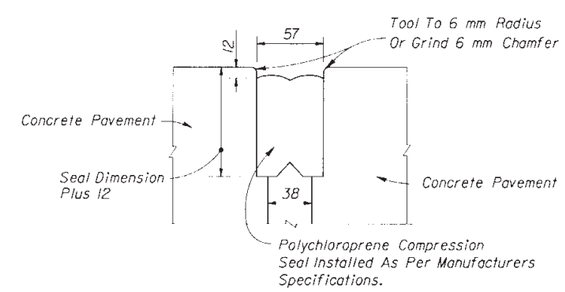

Note: All contacting surfaces between the compression seal and concrete shall be thoroughly coated with a lubricant-adhesive.

JOINT DIMENSIONS

COMPRESSION SEAL DETAIL

DESIGN NOTES

1. For rehabilitation projects, the designer must indicate in the plans the number of slabs to be removed, the number of sub slabs to be constructed/reconstructed, and the location of expansion joints.

2. Pay quantity of expansion joint to be calculated across pavement at right angles to the centerline of the roadway pavement. Shoulder pavement joint included.

GENERAL NOTES

1. The centerline of roadway and the centerline of bridge do not necessarily coincide. Prior to the placement of the expansion joint, the centerline of the roadway pavement shall be determined.

2. For information on other types of concrete pavement joints see Index No. 305.

3. Pay quantity for expansion joint is the length of joint to be constructed across the roadway and shoulder pavements, measured at right angles to the centerline of the roadway.

   Payment for expansion joint shall be full compensation for joint construction, including reinforced concrete subslab, sheet metal strip and compression seal, but, not including roadway pavement reconstruction associated with joint replacement or reconstruction.

   Expansion joint to be paid for under the contract unit price for Bridge Approach Expansion Joint, MI.

STATE OF FLORIDA DEPARTMENT OF TRANSPORTATION
ROAD DESIGN

BRIDGE APPROACH EXPANSION JOINT-CONCRETE PAVEMENT

	Names	Dates	Approved By
Designed By			Bruce Dietrich
Drawn By	LMF	06/75	State Pavement Design Engineer
Checked By	SFA	06/75	
F.H.W.A. Approved:		08/16/77	

Revision No.	Sheet No.	Index No.
94	1 of 1	306

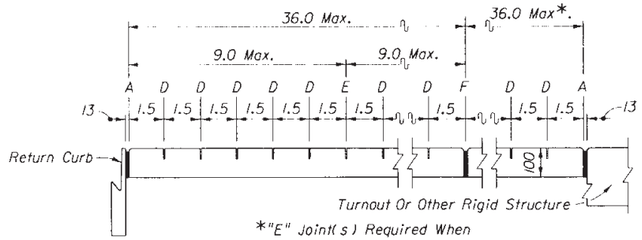

*"E" Joint(s) Required When Length Exceeds 9.0 m

SAWED JOINTS

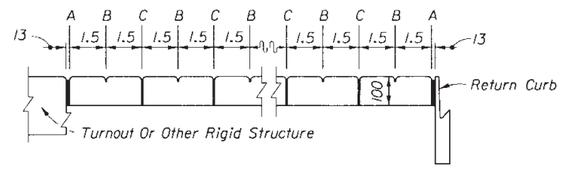

OPEN JOINTS

EXAGGERATED SCALE

LONGITUDINAL SECTION

SIDEWALK JOINTS

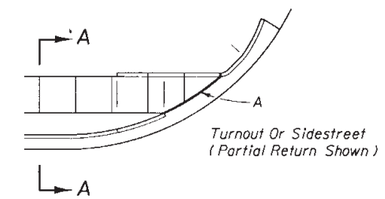

JOINT LEGEND

A - 13 mm Expansion Joints (Preformed Joint Filler)
B - 3 mm Dummy Joints, Tooled
C - 3 mm Formed Open Joints
D - 5 mm Saw Cut Joints, 40 mm Deep (96th Hour) Max. 1.5 m Centers
E - 5 mm Saw Cut Joints, 40 mm Deep (12th Hour) Max. 9.0 m Centers
F - 13 mm Expansion Joint When Run Of Sidewalk Exceeds 36.0 m
G - Cold Joint With Bond Breaker, Tooled

SECTION AA

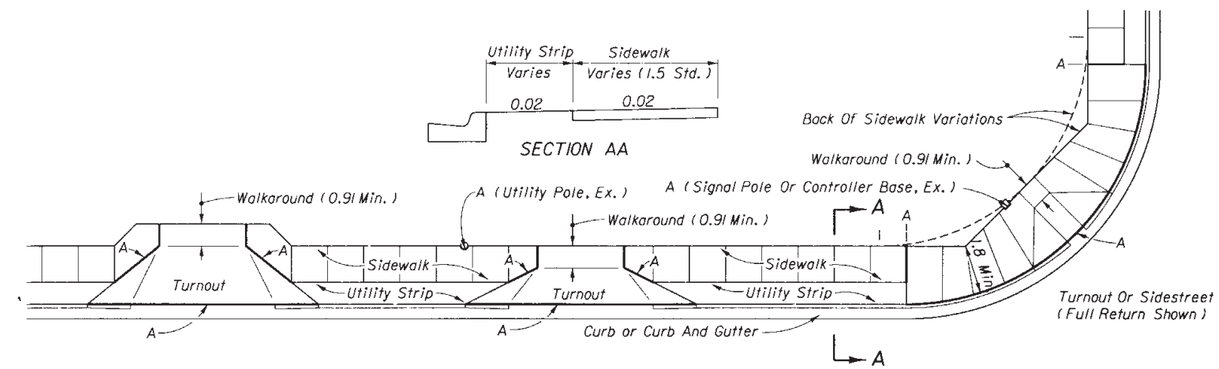

SIDEWALK WITH UTILITY STRIP

GENERAL NOTES

1. Sidewalks shall be constructed in accordance with FDOT Standard Specification No. 522 except for puplic sidewalk curb ramp runs which shall be finished in accordance with Index No. 304.
2. Bond breaker material can be any impermeable coated or sheet membrane or preformed material having a thickness of not less than 6 mils nor more than 13 mm.
3. For public sidewalk curb ramps see Index No. 304.
4. For turnouts see Index No. 515.
5. Sidewalk shall be paid for under the contract unit price for Sidewalk Concrete (100 mm Thick), M2 .

SECTION BB

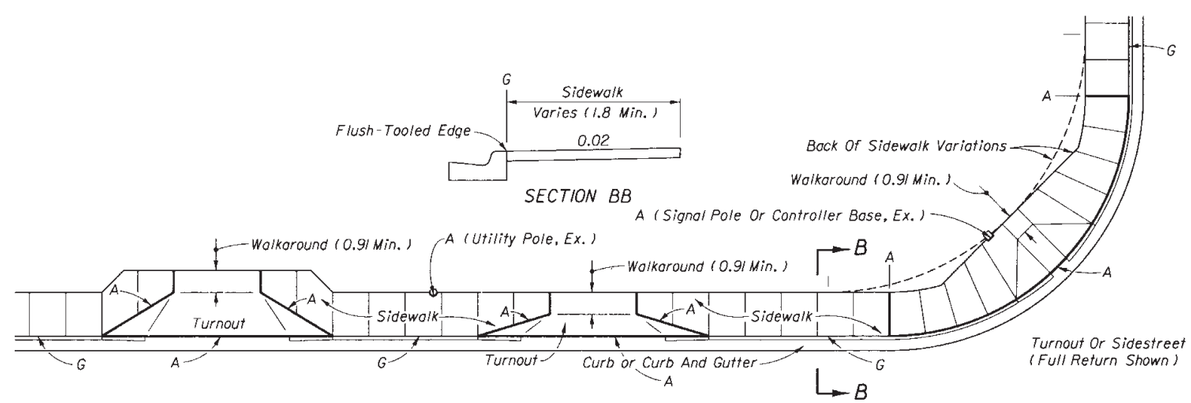

SIDEWALK WITHOUT UTILITY STRIP

CONCRETE SIDEWALK FOR CURBED ROADWAYS

STATE OF FLORIDA DEPARTMENT OF TRANSPORTATION
ROAD DESIGN

CONCRETE SIDEWALK

	Names	Dates
Designed By	SPECS	
Drawn By	HKH	11/93
Checked By	JVG	11/93
F.H.W.A. Approved:		

Approved By Freddie Simmons
State Roadway Design Engineer

Revision No.	Sheet No.	Index No.
94	1 of 1	310

GENERAL NOTES

1. The illustrated applications for guardrail are standard requirements.

   The beginning of guardrail need shall be at the greatest of the upstream distances from the hazard, as determined from Figure 1, other applicaation details of this index and the lengths described below for bridges.

   Bridges generally have associated lateral hazards, whereby the length of advancement is established by the intersect of the hazard boundary and the clear zone limit as shown in Figure 1. For bridges that extend in advance of the lateral hazard a distance sufficient to shield the hazard, and the ends of their traffic rails or handrail are the only hazards that require shielding, then the length of guardrail will be either 19.05 m or 26.67 m in accordance with Details H, I, S & T of this index; however, when Schemes 11, 12, 13 & 14 of Index No. 401 apply, these lengths must be increased to achieve the reverse bridge connections in those Schemes.

2. One Panel equals 3.810 m. Guardrail shall be constructed with rail elements 3.810 m in length except where 7.620 m elements are called for by this and other standards (indexes) or specifically called for in the plans.

   Post spacings shall be 1.905 m except that reduced spacings shall be used for (a) transitions to anchorages at rigid structures such as bridges (See Detail J), (b) the conditions in Note No. 3 below, (c) special post applications, (d) the specific posts spacing shown in Index No. 401, and, (e) specific spacings called for in the plans.

3. At above ground rigid hazards where the face of guardrail is offset from the hazard less than the desirable 1.2 m minimum, a 0.9 m minimum offset may be used with post spacing of 0.9 m extending over the length of the hazard plus one panel of approach rail. For an offset less than 0.9 m, the concrete safety shape shall be used unless other shielding is approved by the Engineer of record. See Index No. 410, detail "Shoulder Barrier At Rigid Above Ground Hazards" for typical safety shape, and the plans for special shapes and applications.

4. In addition to use at conventional roadside hazards, guardrail will be required where fill slopes within the clear zones exceed 1: 3, except that where fill heights are less than 1.8 m guardrail may be omitted (regardless of fill slope) unless in the opinion of the Engineer its use is deemed necessary due to other roadside features.

5. Straight rail sections may be used for all radii of 38.0 m or greater. For radii less than 38.0 m the rail must be fabricated to fit.

6. Corrugated sheet steel beams, end shoes, end sections and back-up plates shall conform to the current requirements of AASHTO M180, Class A (12 ga.), Type II (zinc) coating. Aluminum guardrail elements will not be permitted unless specifically called for in the plans. All other metallic components, hardware and accessories shall be in conformance with the appropriate current AASHTO requirements.

   Recycled beams: Used Class A guardrail beams that have been refurbished to condition new (AASHTO M180) may be used for both maintenance and construction of new guardrail. Refurbishing shall include stripping of the existing galvanizing, restoration of the base metal in section and straightness free of warp and deformation, and, regalvanizing to AASHTO Type II specifications. Refurbished beams that retain ruptured holes, gashes or tears will not be accepted.

7. Permissible post and offset block combinations are tabulated on sheet 11 of 15.

8. Where necessary to enlarge or add holes to galvanized guardrail, the work will be done by drilling or reaming. Damaged galvanized guardrail will be metalized in accordance with Sections 562 and 971 of the Standard Specifications. No burning of holes will be permitted.

9. Guardrail reflector color (white or yellow) shall conform to the color of the near lane edgeline.

10. Crash cushions may be required in lieu of or in conjunction with guardrail at locations where space does not permit development of sufficient guardrail length, offset or crashworthiness at terminals. On high speed facilities (90 km/h or greater) crash cushins shall be constructed at Type II end anchorages located in the median within the clear zone.

11. Median guardrail for bridges located on divided roadways shall be constructed the same as outer roadway guardrail under the following conditions:

    (a) Medians of uniform width that are occupied by other transportation and joint use facilities.

    (b) Medians of uniform or variable widths with independent vertical alignments not suited to normal median guardrail installations.

    (c) Medians of bifurcated roadways.

12. Any guardrail with existing concrete posts that is being reset under a construction contract shall be reset using wood or steel posts.

13. All guardrail panels, end sections and special end shoes shall be lapped in the direction of adjacent traffic.

14. Guardrail mounting height of 0.53 m to center of W beam and 0.46 m to lower post bolt in thrie beam is critical and shall be attained in all cases.

15. Guardrail connections to existing bridges shall be in accordance with this index and Index No. 401. Connections to concrete barrier walls shall be in accordance with this index and Index No. 410.

Design Speed (km/h)	X (Length Of Advancement) m ◪
90-110	= 13 (D-d)
80 Or Less	= 16 (D-d)

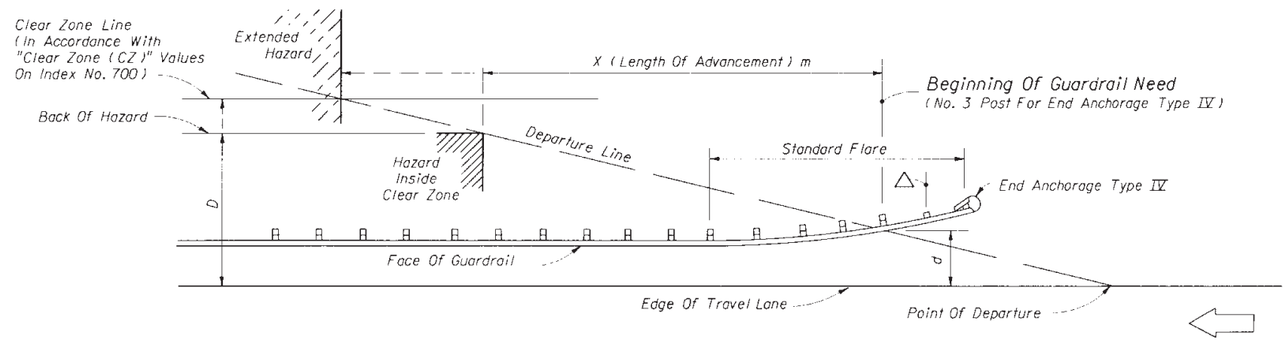

◪ Length of advancement determined from the diagram and equations above establishes the location of the upstream beginning of need for guardrail, however, the length of advancement can be no less than that required by other details of this index, and by the minimum lengths described by General Note No. 1.

The Standard Flare with End Anchorage Type IV is shown in the diagram above, however, the diagram applies to other configurations that may occur at the beginning of need, such as, other flare designs; upstream returns; and, other upstream deflected, tangent and curvilinear conditions.

△ Type IV End Anchorages constructed prior to July 1, 1990, which were located by the line of departure passing through the face of rail at the second breakaway post, will not require relocation except under the following conditions: (a) the plans call for resetting or relocation (b) so directed by the Engineer. Reset or relocated guardrail is to be set with the line of departure passing through the face of rail at the third post as shown.

Equation Variables:

D = Distance in meters from near edge of the near approach travel lane to either (a) the back of hazard, when the hazard is located inside the clear zone or (b) the clear zone line, when the hazard extends to or goes beyond the clear zone line. For left side hazards and clear zones on two-way undivided facilities, D is measured from the inside edge of the near approach travel lane.

d = Distance in meters from the near edge of the near approach travel lane to the face of guardrail at its intersection with the departure line (No. 3 post where End Anchorage Type IV used). For left side hazards and clear zones on two-way undivided facilities, d is measured from the inside edge of the near approach travel lane. See Standard Flare-Detail P for additional information.

LENGTH OF ADVANCEMENT

Figure 1

STATE OF FLORIDA DEPARTMENT OF TRANSPORTATION
ROAD DESIGN

GUARDRAIL

	Names	Dates
Designed By		
Drawn By	HSD	8/83
Checked By	JVG	8/83
F.H.W.A. Approved:		10/06/83

Approved By Freddie Simmons
State Roadway Design Engineer

Revision No.	Sheet No.	Index No.
94	1 of 15	400

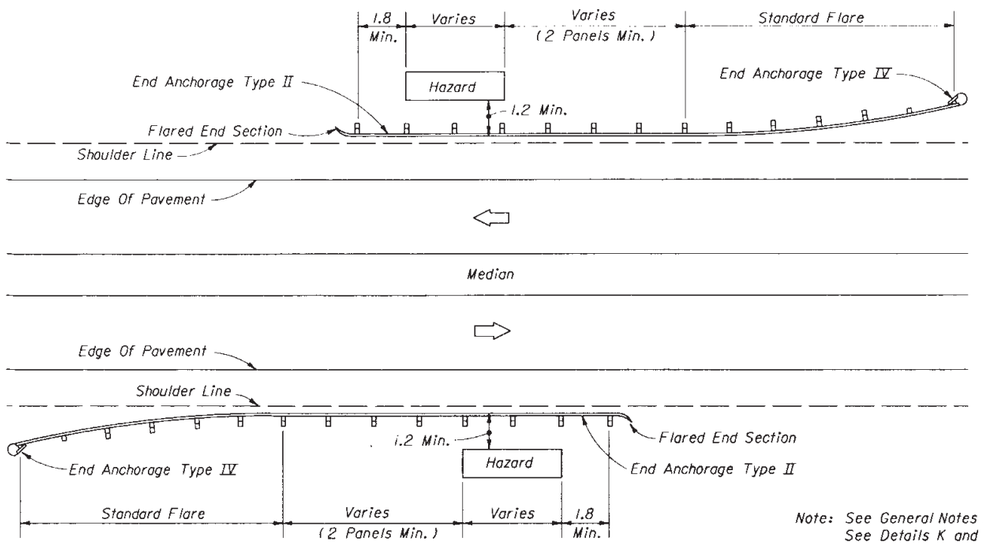

DIVIDED ROADWAY - DETAIL B

Note: See General Notes Nos. 1, 2, 3, and 4.
See Details K and L for guardrail offsets.
See Detail P for standard flare.
For urban curb and gutter sections that require shielding from hazards see concrete barrier wall Index No. 410.

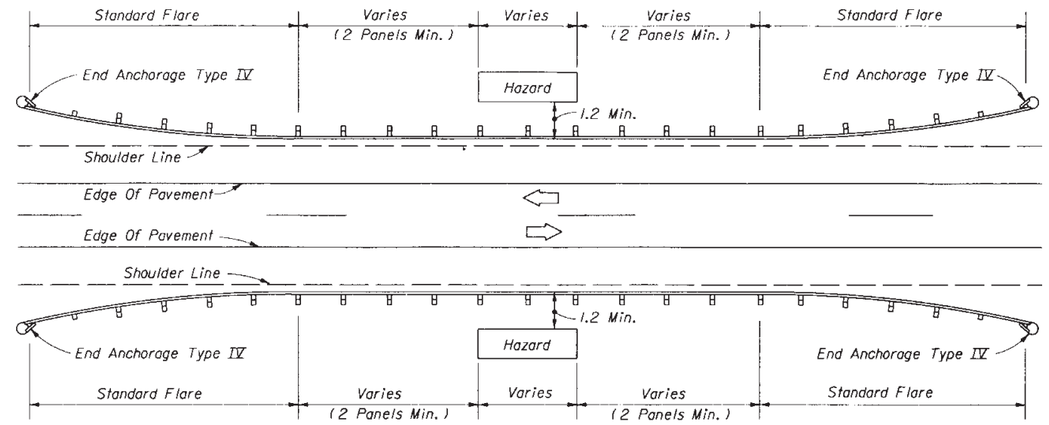

UNDIVIDED ROADWAY - DETAIL C

GUARDRAIL APPLICATION FOR ROADSIDE HAZARDS

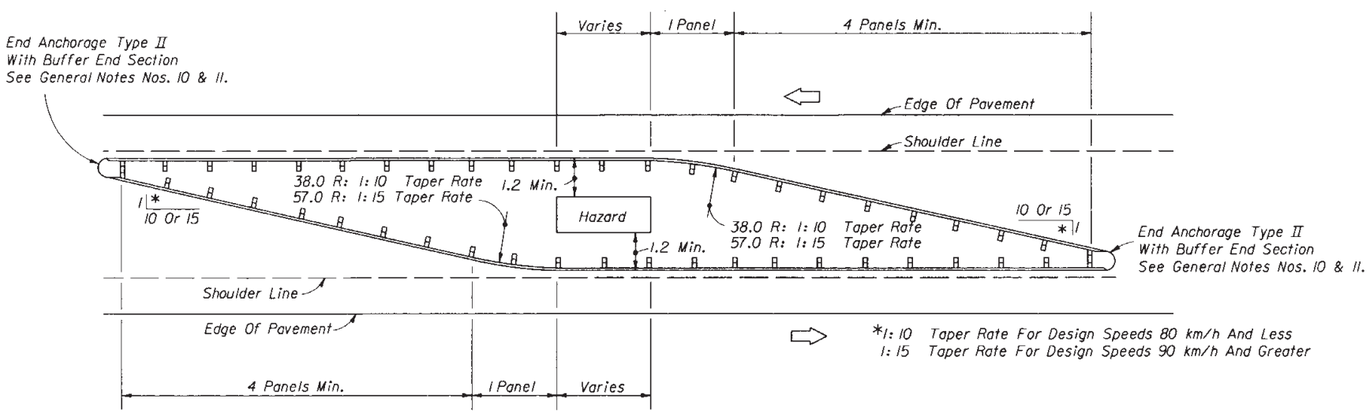

*1: 10 Taper Rate For Design Speeds 80 km/h And Less
1: 15 Taper Rate For Design Speeds 90 km/h And Greater

OPPOSING TRAFFIC - DETAIL D

Note: See General Notes Nos. 1, 2, 3 and 11.
See Details K and L for guardrail offsets.
For urban curb and gutter sections that require shielding from hazards see concrete barrier wall Index No. 410.

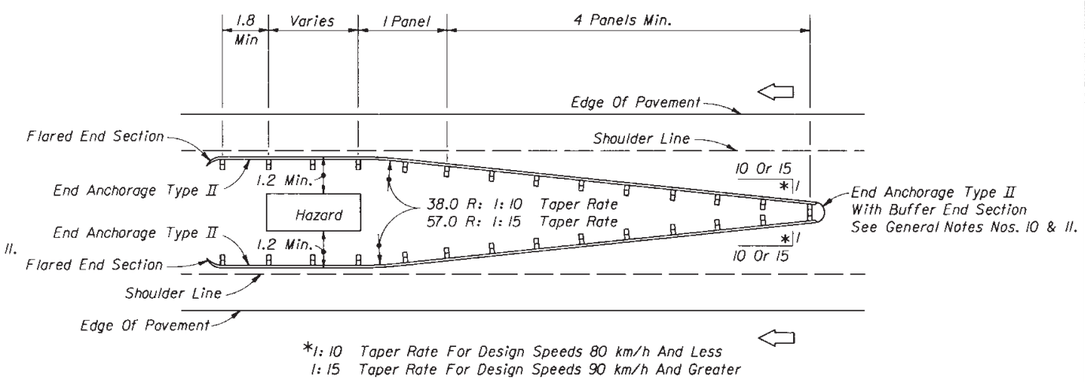

*1: 10 Taper Rate For Design Speeds 80 km/h And Less
1: 15 Taper Rate For Design Speeds 90 km/h And Greater

ONE-WAY TRAFFIC - DETAIL G

GUARDRAIL APPLICATION FOR MEDIAN AND GORE HAZARDS

STATE OF FLORIDA DEPARTMENT OF TRANSPORTATION
ROAD DESIGN

GUARDRAIL

	Names	Dates	Approved By Freddie Simmons State Roadway Design Engineer
Designed By			
Drawn By	HSD	09/81	
Checked By	JBW/JVG	09/81	Revision No. 94 / Sheet No. 2 of 15 / Index No. 400
F.H.W.A. Approved:		10/08/81	

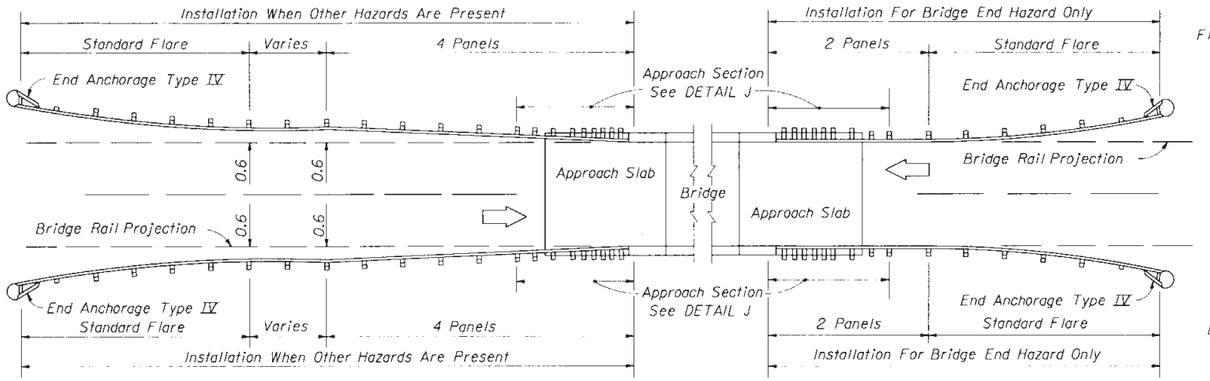

UNDIVIDED ROADWAY - DETAIL H

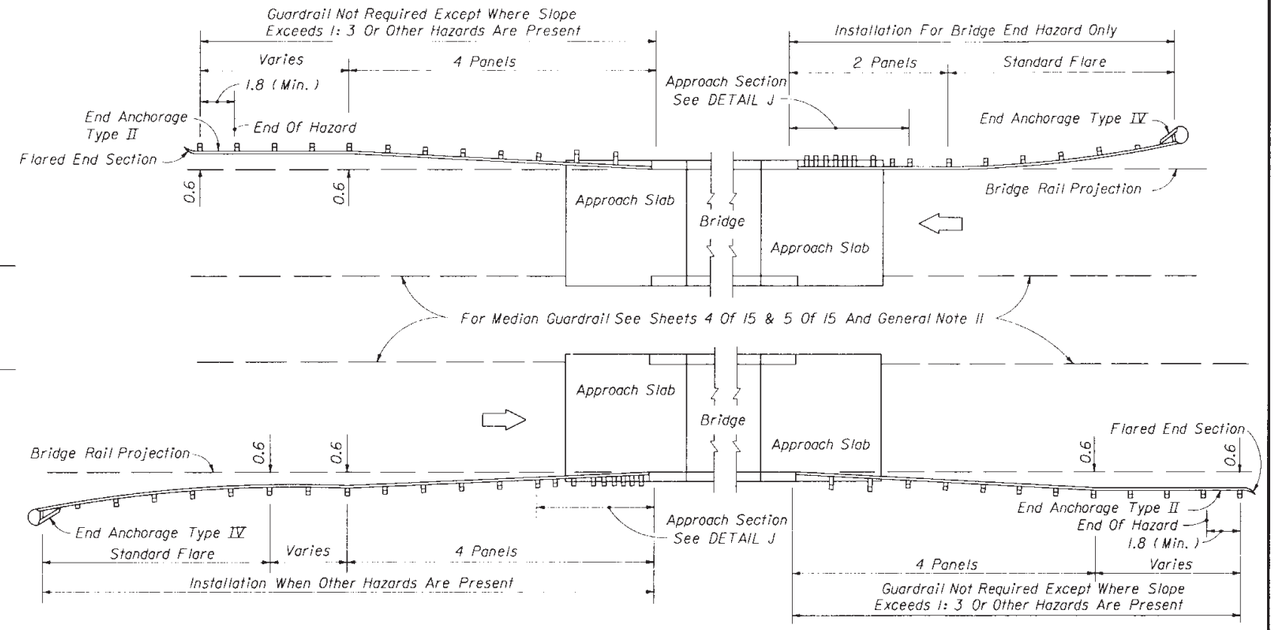

DIVIDED ROADWAY - DETAIL I

Note: See General Notes Nos. 1 and 2. See Details J and N For Connections To Bridges

GUARDRAIL APPLICATIONS FOR BRIDGES WITH FULL WIDTH SHOULDERS

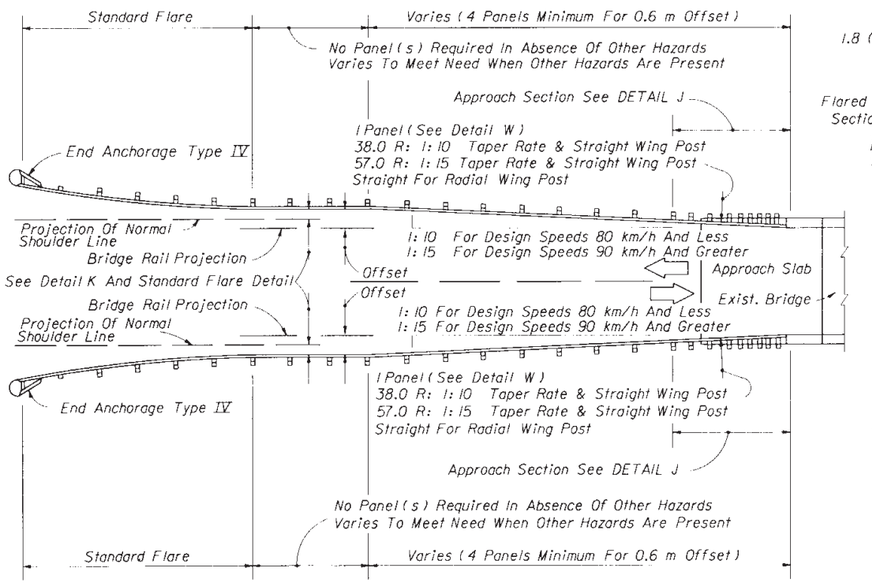

UNDIVIDED ROADWAY - DETAIL S

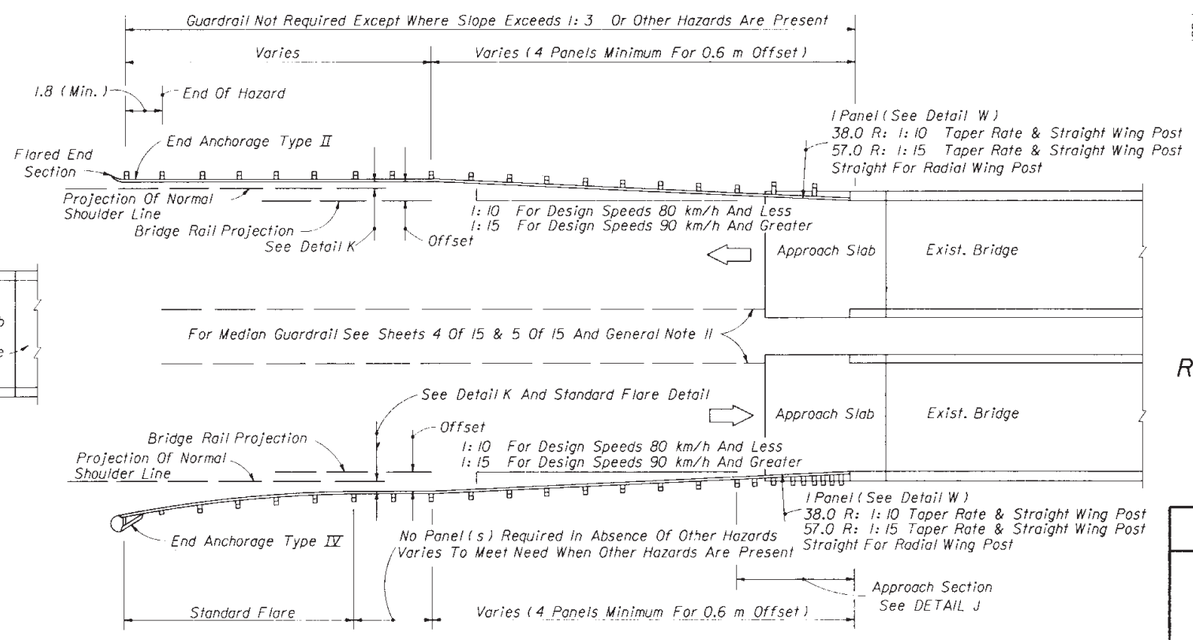

DIVIDED ROADWAY - DETAIL T

Note: See General Note No. 2. See Details J And N And Index No. 401 For Connections To Bridges.

GUARDRAIL APPLICATIONS FOR EXISTING BRIDGES WITH LESS THAN FULL WIDTH SHOULDERS

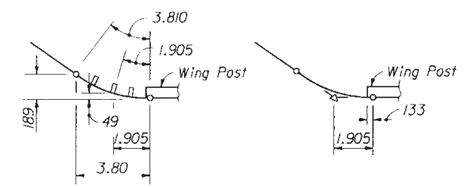

38.0 m RADIAL PANEL

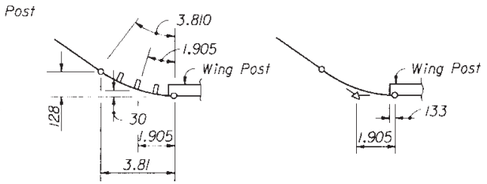

57.0 m RADIAL PANEL

RADIAL PANELS ADJOINING BRIDGE
DETAIL W

STATE OF FLORIDA DEPARTMENT OF TRANSPORTATION
ROAD DESIGN

GUARDRAIL

	Names	Dates	Approved By Freddie Simmons State Roadway Design Engineer		
Designed By					
Drawn By	HSD	08/83			
Checked By	JBW/JVG	08/83	Revision No.	Sheet No.	Index No.
F.H.W.A. Approved:		10/06/83	94	3 of 15	400

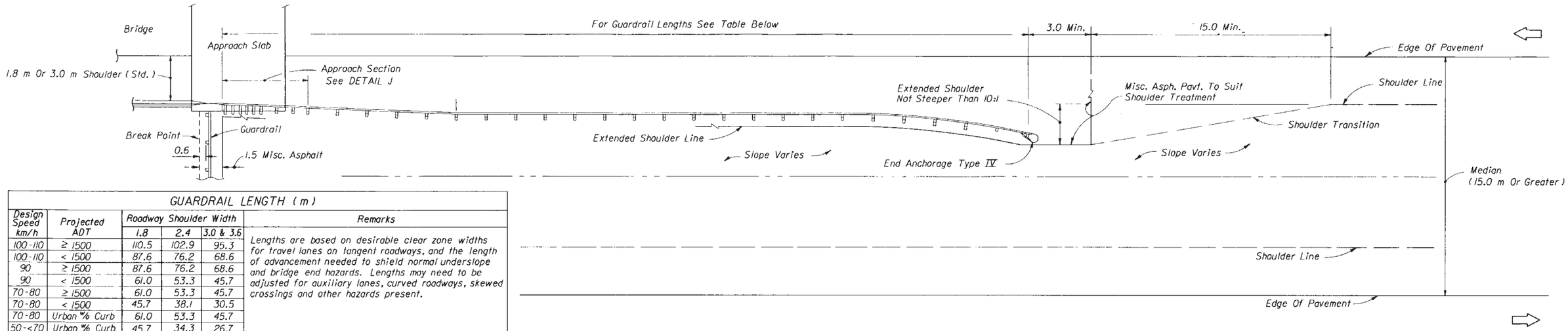

GUARDRAIL LENGTH (m)					
Design Speed km/h	Projected ADT	Roadway Shoulder Width 1.8	2.4	3.0 & 3.6	Remarks
100-110	≥ 1500	110.5	102.9	95.3	Lengths are based on desirable clear zone widths for travel lanes on tangent roadways, and the length of advancement needed to shield normal underslope and bridge end hazards. Lengths may need to be adjusted for auxiliary lanes, curved roadways, skewed crossings and other hazards present.
100-110	< 1500	87.6	76.2	68.6	
90	≥ 1500	87.6	76.2	68.6	
90	< 1500	61.0	53.3	45.7	
70-80	≥ 1500	61.0	53.3	45.7	
70-80	< 1500	45.7	38.1	30.5	
70-80	Urban ⅋ Curb	61.0	53.3	45.7	
50-<70	Urban ⅋ Curb	45.7	34.3	26.7	

GUARDRAIL APPLICATIONS FOR MEDIANS 15.0 m OR GREATER

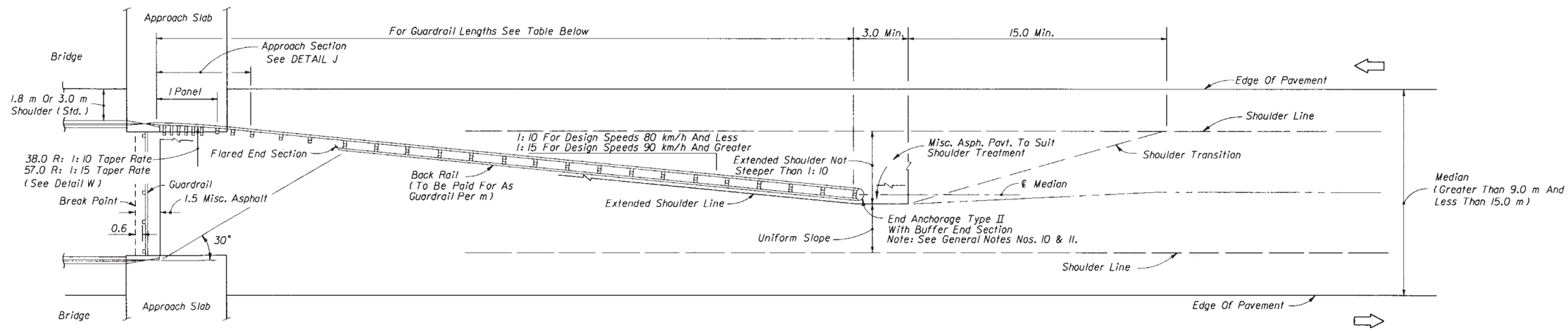

GUARDRAIL LENGTHS																								
Median Width (m)	1: 10 TAPER RATE												1: 15 TAPER RATE											
	1.8 m Bridge Shoulder						3.0 m Bridge Shoulder						1.8 m Bridge Shoulder						3.0 m Bridge Shoulder					
	Panels (No.)			Length (m)			Panels (No.)			Length (m)			Panels (No.)			Length (m)			Panels (No.)			Length (m)		
	Front	Back	Total	Front	Back	Total	Front	Back	Total	Front	Back	Total	Front	Back	Total	Front	Back	Total	Front	Back	Total	Front	Back	Total
NEW																								
12.0	11	8	19	41.9	30.5	72.4	8	6	14	30.5	22.9	53.3	16	13	29	61.0	49.5	110.5	11	9	20	41.9	34.3	76.2
NEW OR EXISTING																								
9.8 & 10.0	8	6	14	30.5	22.9	53.3	5	4	9	19.1	15.2	34.3	11	9	20	41.9	34.3	76.2	6	5	11	22.9	19.1	41.9
10.4	8	6	14	30.5	22.9	53.3	5	4	9	19.1	15.2	34.3	12	10	22	45.7	38.1	83.8	7	6	13	26.7	22.9	49.5
11.0	9	7	16	34.3	26.7	61.0	6	5	11	22.9	19.1	41.9	13	11	24	49.5	41.9	91.4	8	7	15	30.5	26.7	57.2
11.6	10	8	18	38.1	30.5	68.6	7	6	13	26.7	22.9	49.5	14	11	25	53.3	41.9	95.3	10	8	18	38.1	30.5	68.6
12.2	11	8	19	41.9	30.5	72.4	8	6	14	30.5	22.9	53.3	16	13	29	61.0	49.5	110.5	11	9	20	41.9	34.3	76.2
12.8	12	9	21	45.7	34.3	80.0	8	7	15	30.5	26.7	57.2	17	14	31	64.8	53.3	118.1	12	10	22	45.7	38.1	83.8
13.4	12	9	21	45.7	34.3	80.0	9	7	16	34.3	26.7	61.0	18	15	33	68.6	57.2	125.7	13	11	24	49.5	41.9	91.4
14.0	13	10	23	49.5	38.1	87.6	10	8	18	38.1	30.5	68.6	19	15	34	72.4	57.2	129.5	14	12	26	53.3	45.7	99.0
14.6	14	10	24	53.3	38.1	91.4	11	8	19	41.9	30.5	72.4	20	16	36	76.2	61.0	137.2	16	12	28	61.0	45.7	106.7

GUARDRAIL APPLICATIONS FOR MEDIANS GREATER THAN 9.0 m AND LESS THAN 15.0 m

STATE OF FLORIDA DEPARTMENT OF TRANSPORTATION
ROAD DESIGN

GUARDRAIL

	Names	Dates
Designed By		
Drawn By	HSD	09/81
Checked By	JBW/JVG	09/81
F.H.W.A. Approved:		10/08/81

Approved By Freddie Simmons
State Roadway Design Engineer

Revision No.	Sheet No.	Index No.
94	4 of 15	400

GUARDRAIL LENGTHS				
MEDIAN WIDTH (m)	1: 10 TAPER RATE		1: 15 TAPER RATE	
	PANELS (No.)	LENGTH (m)	PANELS (No.)	LENGTH (m)
NEW OR EXISTING				
9.0	6	22.9	9	34.3
EXISTING				
8.5	5	19.1	6	22.9
7.9	Attenuator		Attenuator	
7.3	Attenuator		Attenuator	

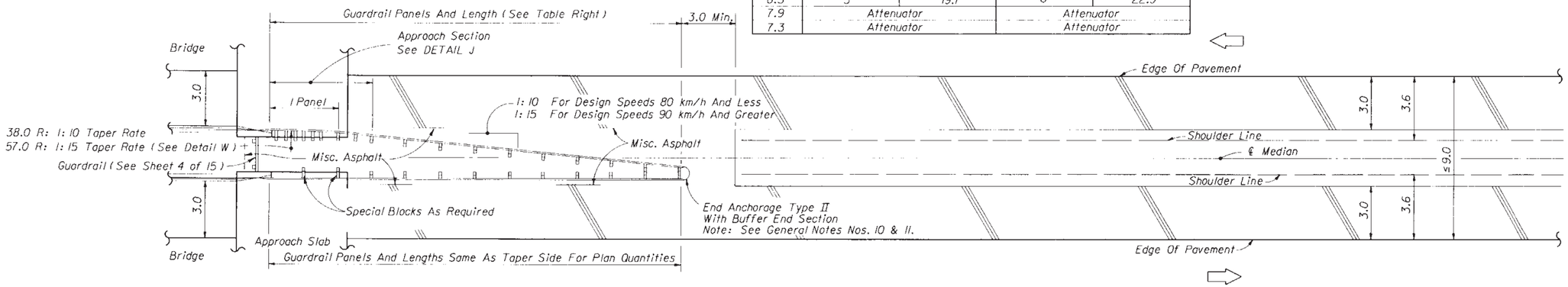

GUARDRAIL APPLICATIONS FOR MEDIANS 9.0 m OR LESS WITH 3.0 m BRIDGE SHOULDERS

GUARDRAIL LENGTHS				
MEDIAN WIDTH (m)	1: 10 TAPER RATE		1: 15 TAPER RATE	
	PANELS (No.)	LENGTH (m)	PANELS (No.)	LENGTH (m)
NEW OR EXISTING				
9.0	12	45.7	18	68.6
EXISTING				
8.5	11	41.9	15	57.2
7.9	9	34.3	13	49.5
7.3	8	30.5	11	41.9

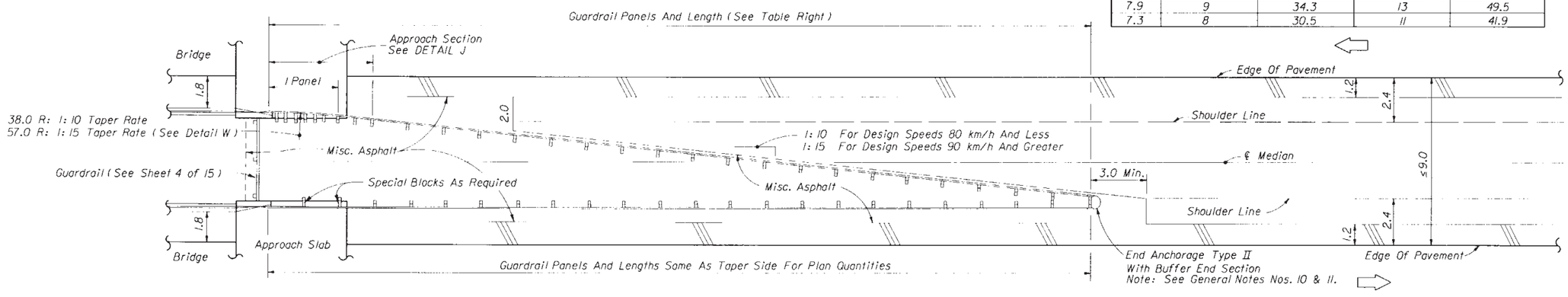

GUARDRAIL APPLICATIONS FOR MEDIANS 9.0 m OR LESS WITH 1.8 m BRIDGE SHOULDERS

NOTE:
The guardrail configurations shown apply only to parallel or near parallel bridges with open medians 9.0 m or less in width. When medians 9.0 m or less in width are closed by continuous decking between the bridge travel ways, traffic separation shall be attained by appropriate treatments such as, but not limited to, raised separators, curbs, guardrail, concrete barrier walls and special barriers.

STATE OF FLORIDA DEPARTMENT OF TRANSPORTATION
ROAD DESIGN

GUARDRAIL

	Names	Dates
Designed By		
Drawn By	RWR	08/82
Checked By	JVG/JBW	08/82
F.H.W.A. Approved:		09/23/82

Approved By Freddie Simmons
State Roadway Design Engineer

Revision No.	Sheet No.	Index No.
94	5 of 15	400

RADIAL GUARDRAIL

R_1 (m)	Normal Turnouts: Taper R_2 (m)	Taper Panels Required	Taper △	Simple Curve R_2 (m)	Simple Curve Panels Required	Simple Curve △
5	7.5	3	87° 19'	7.5	3	87° 19'
6	7.5	3	87° 19'	7.5	3	87° 19'
8	7.5	3	87° 19'	7.5	3	87° 19'
9	7.5	3	87° 19'	7.5	3	87° 19'
11	7.5	3	87° 19'	7.5	3	87° 19'
12	12.0	5	90° 57'	12.0	5	90° 57'
14	12.0	5	90° 57'	12.0	5	90° 57'
15	12.0	5	90° 57'	12.0	5	90° 57'

Note: Only 7.5 m and 12.0 m radius panels are to be used for return guardrail on normal turnouts. On skewed turnouts the number of panels used and their arrangement with straight panels will be as shown in the plans or as directed by the Engineer.

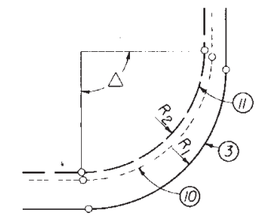

RADIAL GUARDRAIL

LEGEND

1. Edge of roadway pavement.
2. Taper
3. Pavement return (radius R_1).
4. Standard flare to be installed except when existing guardrail on intersecting drive or side road adjoins the project.
5. Post for locating standard flare, proximate to PC or PT:
   No. 2 post-Radii 8.0 m or less.
   No. 3 post-Radii >8.0 m thru ≤ 15 m.
   No. 4 post-Radii >15 m or greater.
6. Post for locating standard flare, proximate to PC or PT:
   No. 3 post-Radii 8.0 m or less.
   No. 4 post-Radii greater than 8.0 m.
7. Expanded shoulder for standard flare.
8. Shoulder transition.
9. Type IV end anchorage, (standard flare only).
10. Shoulder for radial guardrail returns.
11. Radial guardrail to be installed when guardrail required on the intersecting drive or side road (radius R_2).
12. Type II end anchorage (radial return only).
13. Guardrail installation limited to roadway right of way unless otherwise called for in the plans.

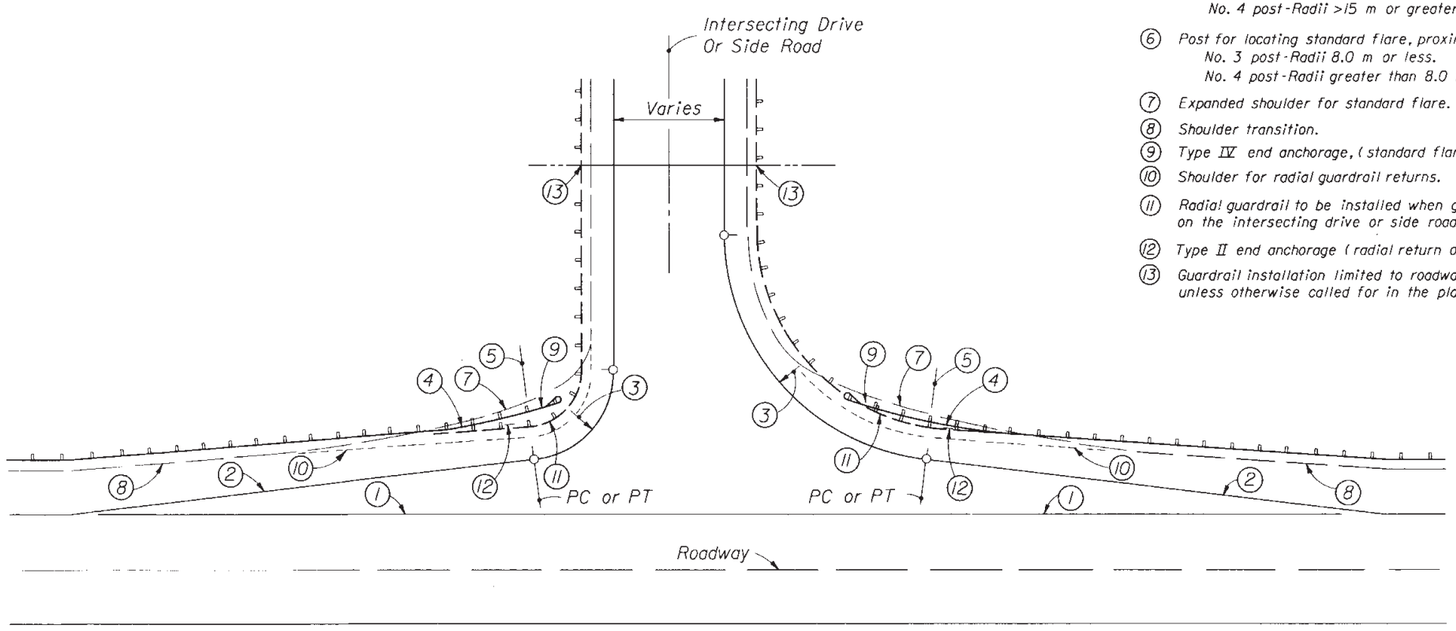

TAPER TURNOUTS

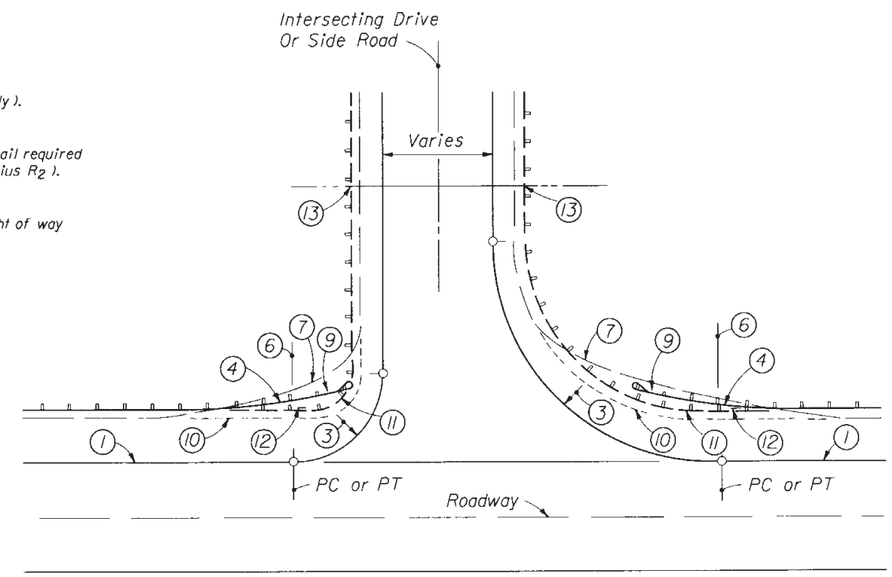

SIMPLE CURVE TURNOUTS

Note: The guardrail application shown on this sheet are for highways with flush shoulders and no restraints for constructing standard flares, anchorages and minimum lengths of guardrail.

Where openings in guardrail are required in close proximity to bridge traffic rails and concrete barrier walls and standard flares with minimum or greater lengths of guardrail can not be applied, either controlled release returns or energy absorbing terminals are to be applied.

GUARDRAIL APPLICATIONS FOR INTERSECTING DRIVES AND SIDE ROADS ON RURAL FACILITIES

STATE OF FLORIDA DEPARTMENT OF TRANSPORTATION
ROAD DESIGN

GUARDRAIL

	Names	Dates
Designed By		
Drawn By	HSD	09/83
Checked By	JVG	09/83
F.H.W.A. Approved:		10/06/83

Approved By Freddie Simmons
State Roadway Design Engineer

Revision No.	Sheet No.	Index No.
94	6 of 15	400

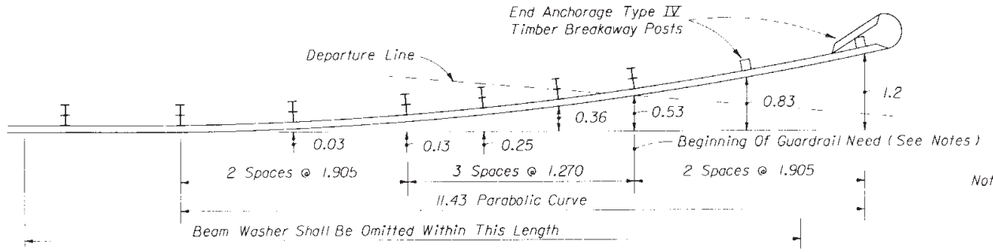

STEEL POSTS

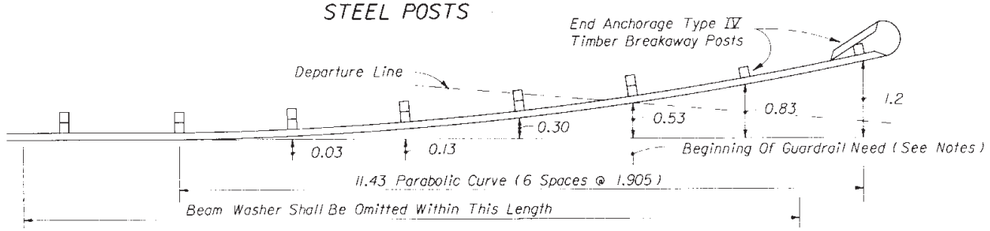

WOOD POSTS

STANDARD FLARE-DETAIL P

Notes:

All posts in flare except breakaway posts to be standard length posts.

All posts except breakaway post will have offset blocks. For post and offset block combinations see Sheet 11 of 15.

The beginning of guardrail need to be determined by Figure 1 (Length Of Advancement), Sheet 1 of 15.

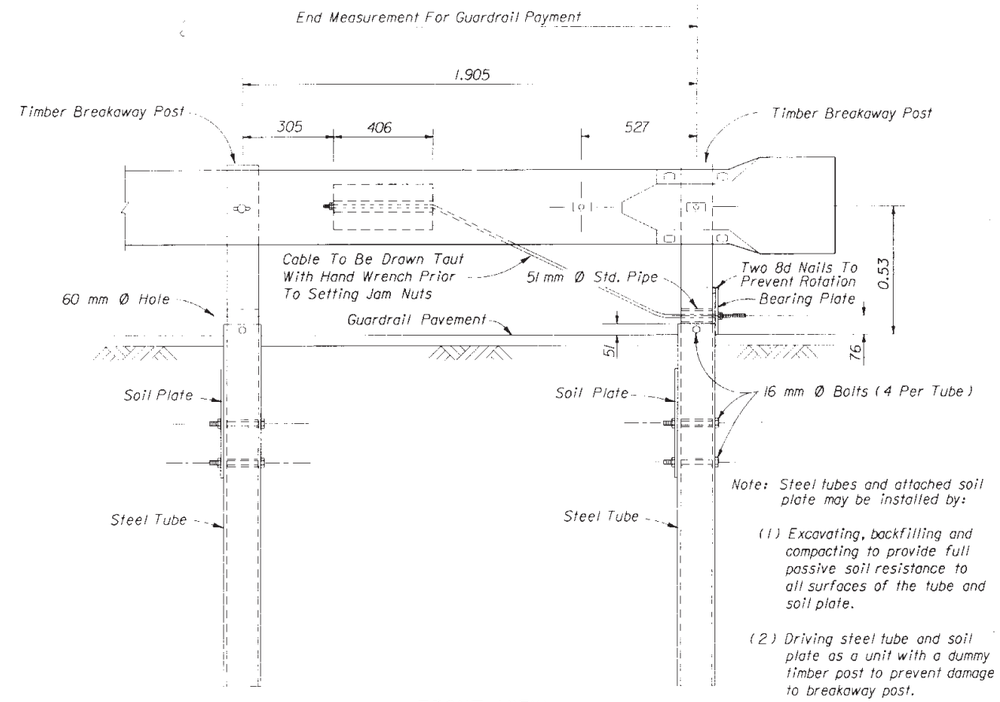

Note: Steel tubes and attached soil plate may be installed by:

(1) Excavating, backfilling and compacting to provide full passive soil resistance to all surfaces of the tube and soil plate.

(2) Driving steel tube and soil plate as a unit with a dummy timber post to prevent damage to breakaway post.

FRONT VIEW

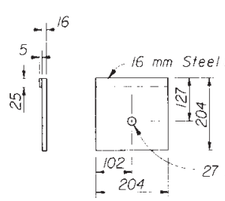

Note: Seal weld before galvanizing.

BEARING PLATE

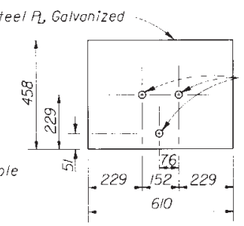

SOIL PLATE

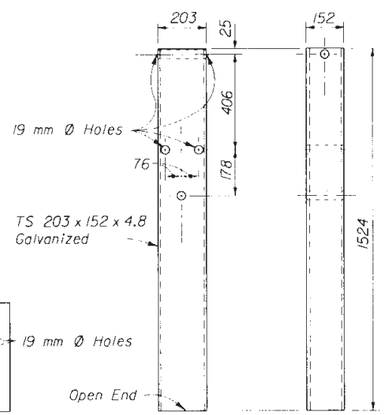

STEEL TUBE

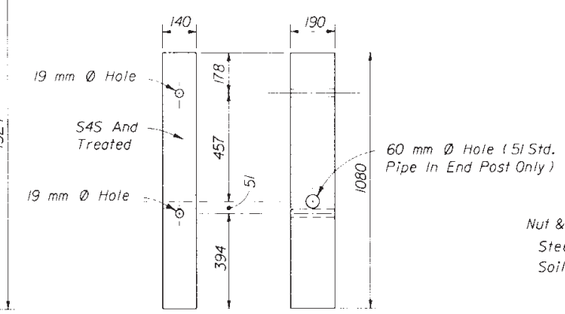

TIMBER BREAKAWAY POST

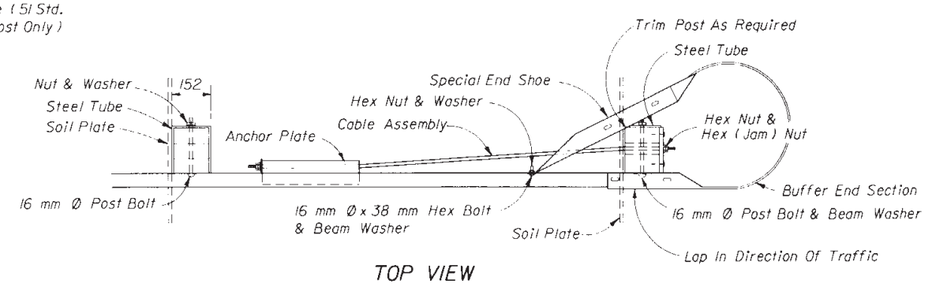

TOP VIEW

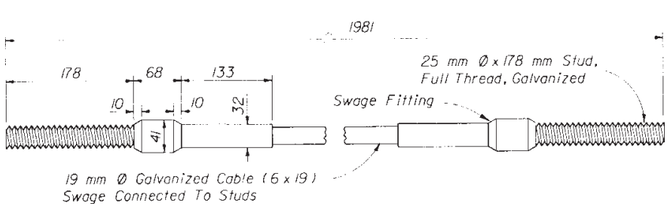

Note: BCT Cable Assembly to be in accordance with the specifications of Standard F-37-76, ARTBA Technical Bulletin No. 268-B, June 1979.

CABLE ASSEMBLY

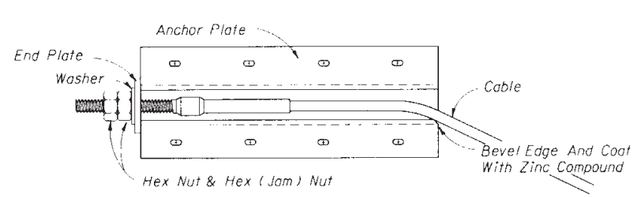

Note: For additional information see Anchor Plate detail.

INSIDE VIEW

CABLE CONNECTION TO BEAM

Note: The payment for the items of End Anchorage Assemblies Type IV shall include furnishing and installing the Buffer End Section, Special End Shoe, One-Piece Anchor Plate, Cable Assembly, Pipe Sleeve, Soil Plates, Steel Tubes, Bearing Plate, two Treated Timber Break-Away Posts, and the necessary hardware.

END ANCHORAGE TYPE IV

STATE OF FLORIDA DEPARTMENT OF TRANSPORTATION
ROAD DESIGN

GUARDRAIL

	Names	Dates	Approved By Freddie Simmons, State Roadway Design Engineer		
Designed By					
Drawn By	JM	01/81			
Checked By	JGV	01/81	Revision No.	Sheet No.	Index No.
F.H.W.A. Approved:		10/08/81	94	7 of 15	400

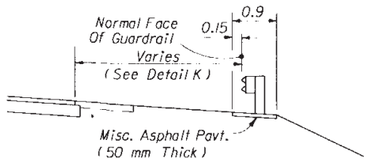

SHOULDER WITH OR WITHOUT 1.5 PAVEMENT

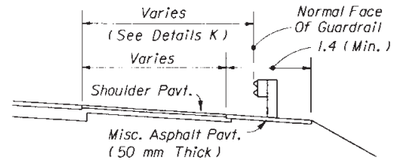

PAVED SHOULDERS

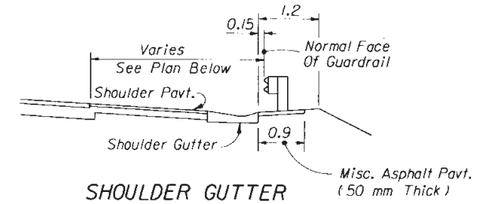

SHOULDER GUTTER

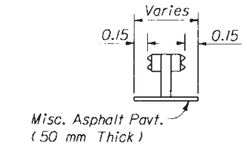

DOUBLE FACE RAIL

MISCELLANEOUS PAVEMENT FOR STANDARD SECTIONS

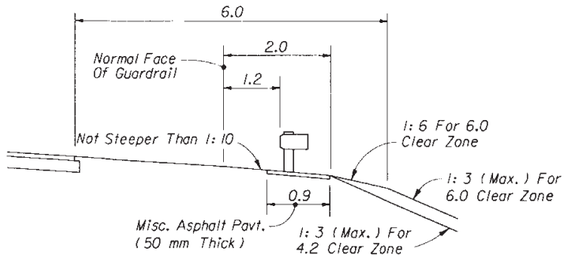

SECTION AA (EXAMPLE FOR 6.0 CLEAR ZONE)

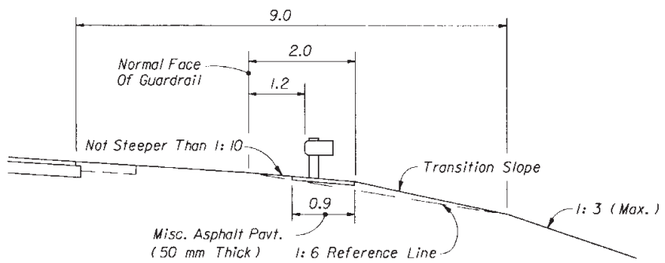

SECTION AA (EXAMPLE FOR 9.0 CLEAR ZONE)

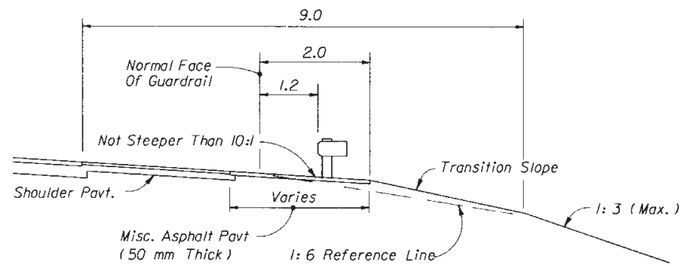

SECTION BB (EXAMPLE FOR 9.0 CLEAR ZONE)

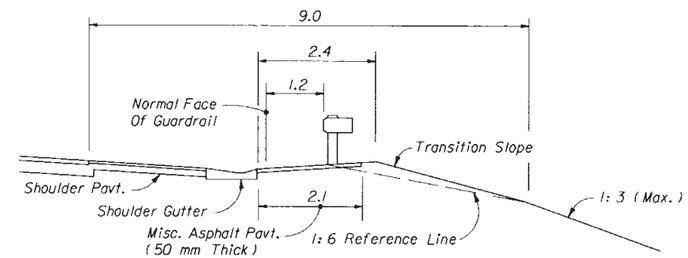

SECTION CC (EXAMPLE FOR 9.0 CLEAR ZONE)

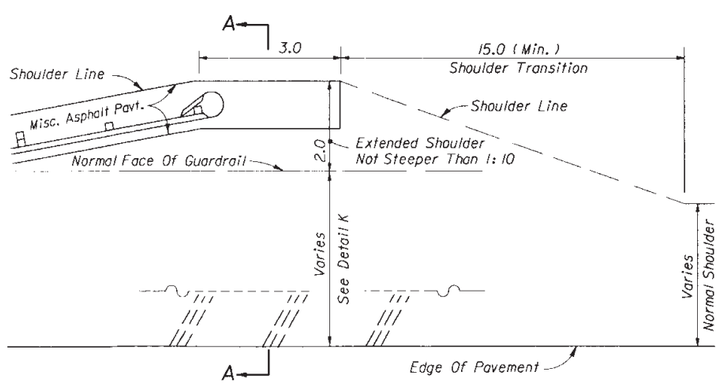

SHOULDER WITH OR WITHOUT 1.5 PAVEMENT

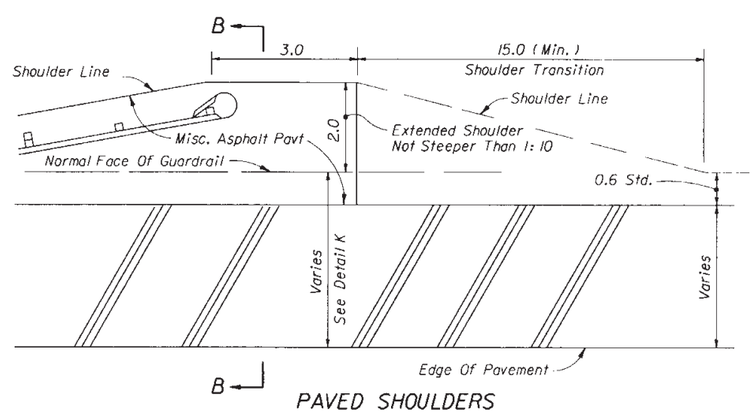

PAVED SHOULDERS

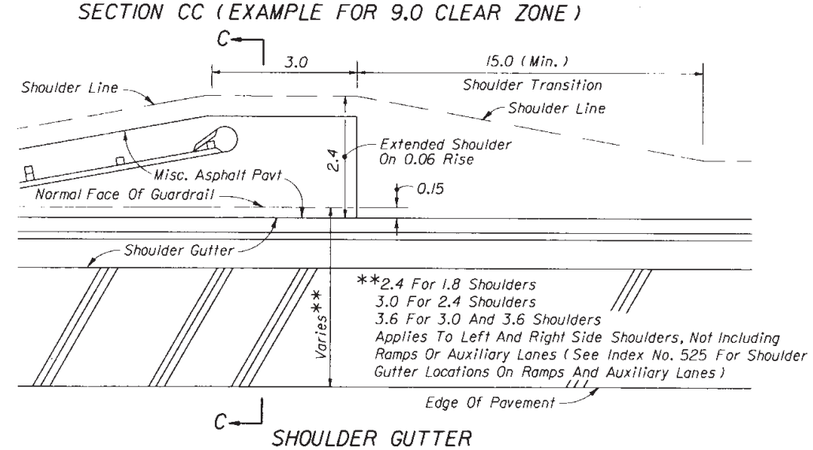

SHOULDER GUTTER

SHOULDERS, SLOPES AND MISCELLANEOUS PAVING FOR THE STANDARD FLARE

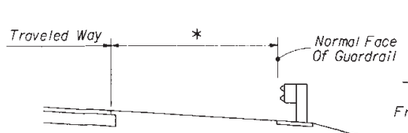

* 3.6 For Shoulders 3.0 And Wider;
2.4 For Median Shoulders 2.4 Or Less In Width; and,
Shoulder Width Plus 0.6 For All Others Shoulders.

STANDARD LOCATIONS

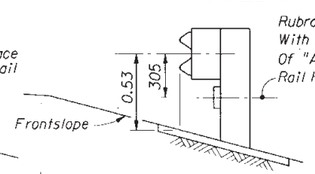

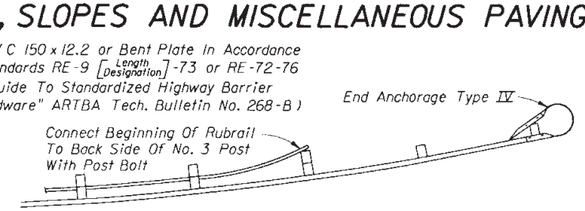

LOCATIONS ON FRONT SLOPES

LATERAL PLACEMENT(m) ON FRONTSLOPES (FROM EDGE OF TRAVELED WAY)

SLOPE	NOT RECOMMENDED	ACCEPTABLE WITH RUBRAIL
1: 4	4.3 to 8.2	8.5 to 13.7
1: 5	4.6 to 7.6	7.9 to 13.7
1: 6	5.2 to 6.7	7.0 to 13.7
1: 7	6.4 to 7.3	7.6 to 13.7
1: 8	Acceptable to 7.6	7.9 to 13.7
1: 9	Acceptable to 7.9	8.2 to 13.7
1: 10	Acceptable to 8.2	8.5 to 13.7

Notes:
For shoulders less than 3.6 m in width the tabulated values will be reduced by the difference between 3.6 m and the shoulder width.

Placement of guardrail on frontslopes steeper than 1: 4 not recommended.

Cost of rubrail to be included in the contract unit price for guardrail.

GUARDRAIL LOCATION - DETAIL K

STATE OF FLORIDA DEPARTMENT OF TRANSPORTATION
ROAD DESIGN

GUARDRAIL

	Names	Dates
Designed By		
Drawn By	JM	07/81
Checked By	JBW/JNG	07/81
F.H.W.A. Approved:		10/08/81

Approved By Freddie Simmons
State Roadway Design Engineer

Revision No.	Sheet No.	Index No.
94	8 of 15	400

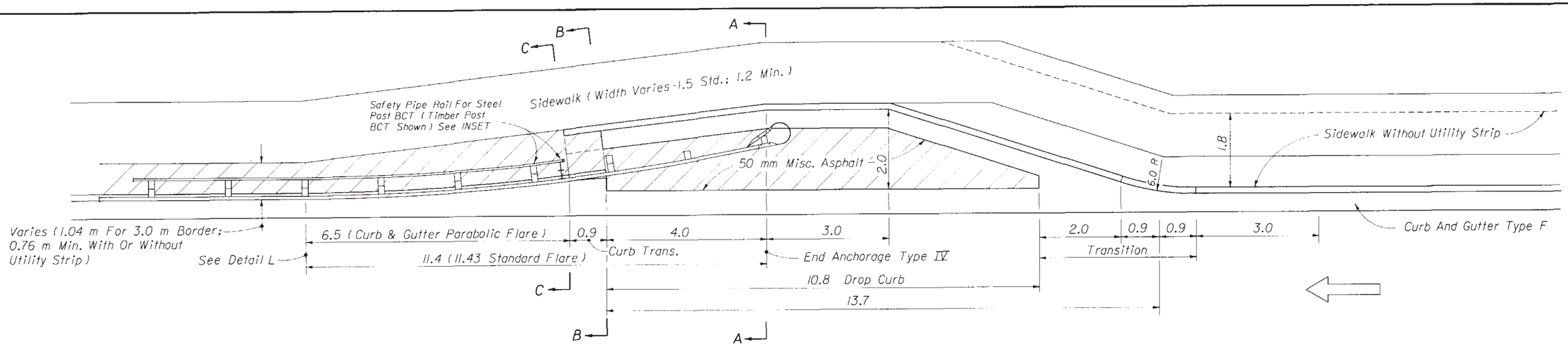

PLAN

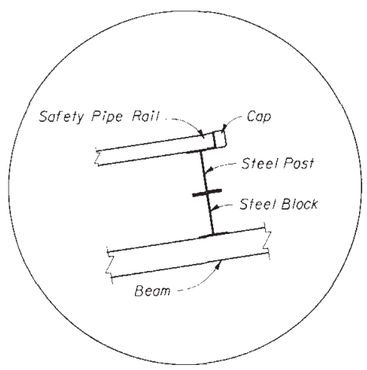

Safety Pipe Rail For Steel Post BCT

INSET

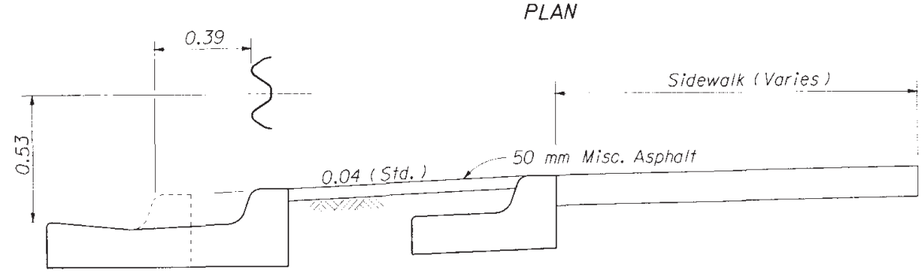

SECTION CC

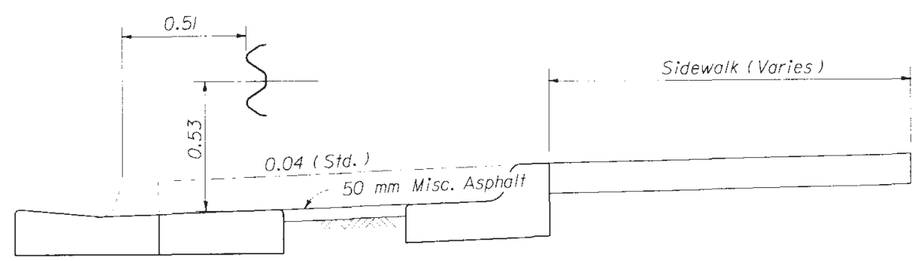

SECTION BB

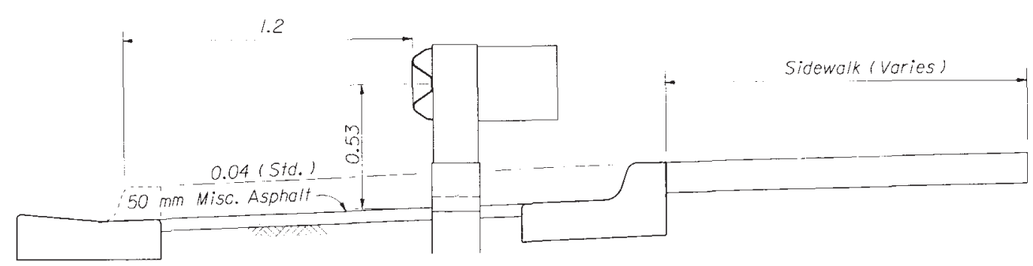

SECTION AA

APPROACH TREATMENT FOR STANDARD FLARE FOR CURB AND GUTTER

DETAIL Q

STATE OF FLORIDA DEPARTMENT OF TRANSPORTATION
ROAD DESIGN

GUARDRAIL

	Names	Dates
Designed By	JVG/JBW	10/87
Drawn By	JBW	10/87
Checked By	JVG	10/87
F.H.W.A. Approved:		

Approved By Freddie Simmons
State Roadway Design Engineer

Revision No.	Sheet No.	Index No.
94	9 of 15	400

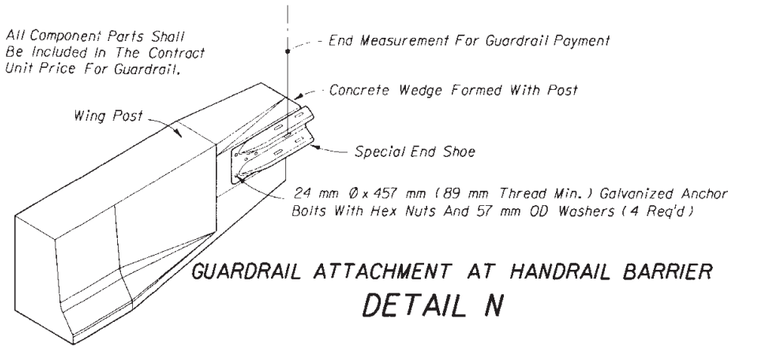

GUARDRAIL ATTACHMENT AT HANDRAIL BARRIER
DETAIL N

APPROACH POSTS AND SPECIAL OFFSET BLOCKS	
OFFSET BLOCK DIMENSIONS	Dimensions shown are suited to standard approach slabs with parallel curb configurations and typical guardrail lateral transitions. For other approach slab configurations and guardrail alignments, the approach posts are to be adjusted and the depth of the offset blocks adjusted for a snug fit against the back of the rail. Offset blocks can be no deeper than one special block plus one standard block. The nested rails shall not be bolted to the blocks and posts at blocks (a), (c) and (e). One 16d galvanized nail is to be used between timber blocks and posts (a) through (h) to prevent incidental rotation of blocks. All posts are standard posts except where approach slab configurations require the use of special steel posts. Where applicable, normal offset blocks are to be used with special steel posts. When steel offset blocks are used, rail back-up plates are not to be used at offset blocks (a) through (f).
(a)	152 x 432 x 350
(b)	152 x 419 x 350
(c)	152 x 406 x 350
(d)	152 x 394 x 350
(e)	152 x 381 x 350
(f)	152 x 356 x 350
(g)	152 x 330 x 350
(h)	152 x 279 x 350

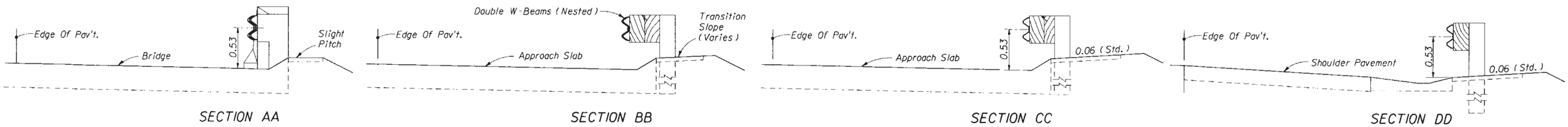

SECTION AA SECTION BB SECTION CC SECTION DD

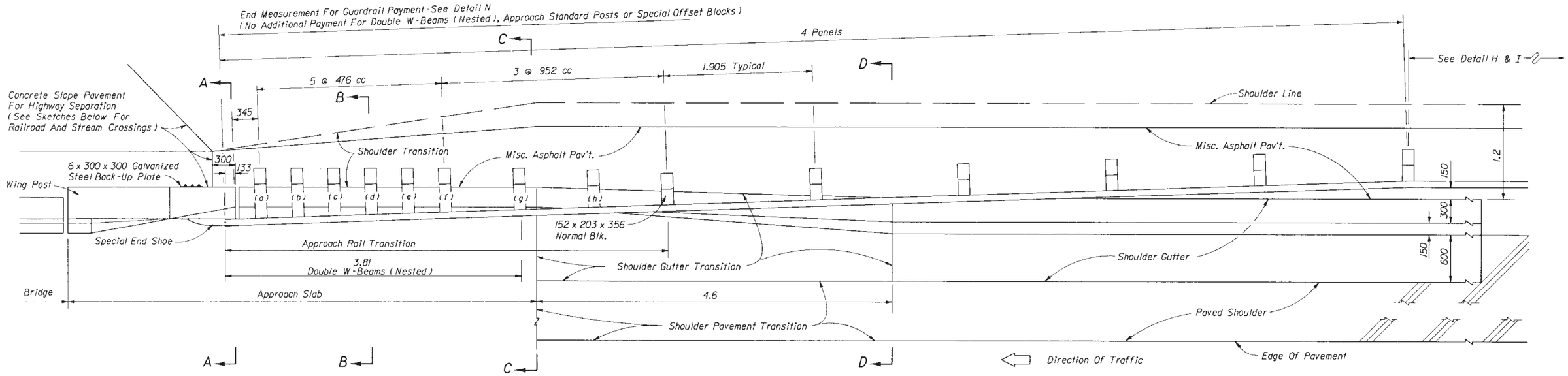

APPROACH GUARDRAIL FOR BRIDGE CONNECTIONS • GUARDRAIL, SHOULDER GUTTER AND SHOULDER TRANSITIONS AT BRIDGE APPROACHES

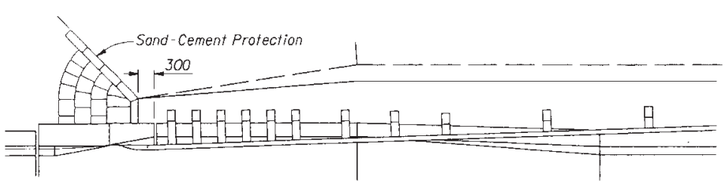

SKETCH - BRIDGES OVER RAILROADS*

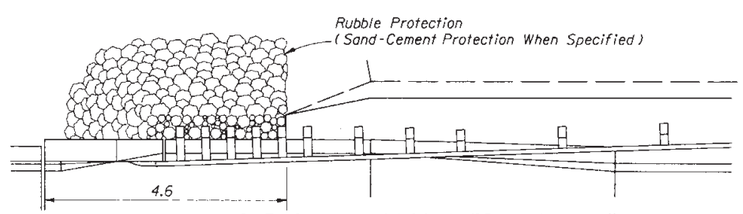

SKETCH - BRIDGES OVER STREAMS*

*For Additional Information See FDOT Structures Design Office "Detailing Manual" and "Design Guidelines".

DETAIL J

STATE OF FLORIDA DEPARTMENT OF TRANSPORTATION
ROAD DESIGN

GUARDRAIL

	Names	Dates
Designed By		
Drawn By	JBW/HSD	04/91
Checked By	JVG/JBW	04/91
F.H.W.A. Approved:		

Approved By Freddie Simmons
State Roadway Design Engineer

Revision No.	Sheet No.	Index No.
94	10 of 15	400

REFLECTOR NOTES

1. Reflectors shall conform to Section 993-5 of the Standard Specifications.
2. Reflector color (white or yellow) shall conform to the color of the near lane edgeline.
3. Face of rail bolt, screw, rivet or bracket mounted reflectors shall not be used in lieu of adhesive mounted reflectors.
4. Post mounted reflectors approved on the 'Qualified Products List' may be used by FDOT Maintenance to replace damaged or missing reflectors in a continuous run of existing post mounted reflectors. Adhesive and post mounted reflectors shall not be intermixed in a continuous run of guardrail.
5. The cost for reflectors shall be included in the contract unit price for Guardrail.

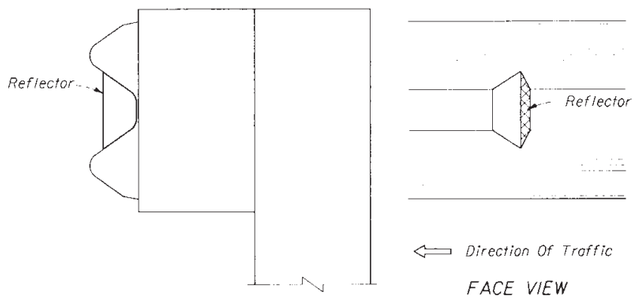

SECTIONAL VIEW

FACE VIEW

REFLECTOR MOUNTING

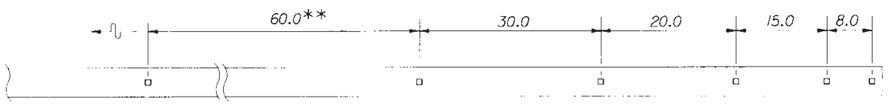

Note: Adjustment in spacing may be required to fit exact guardrail lengths as directed by the Engineer. For minimum installations (length 19.05) provide one reflector at each end and at approximate center.

**For curves with radii less than 875.0 the spacing shall be reduced to 30.0 through the curve.

REFLECTOR SPACING

ADHESIVE REFLECTORS-DETAIL M

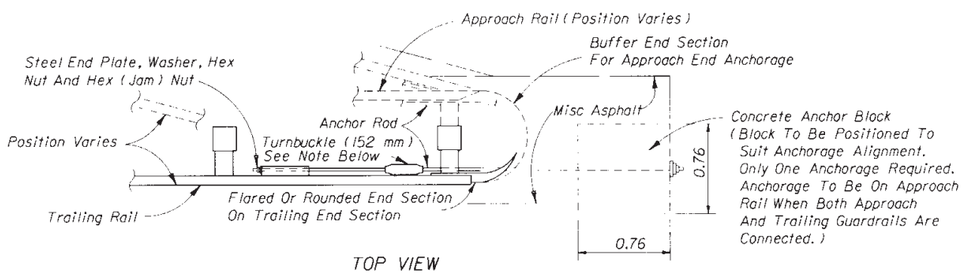

TOP VIEW

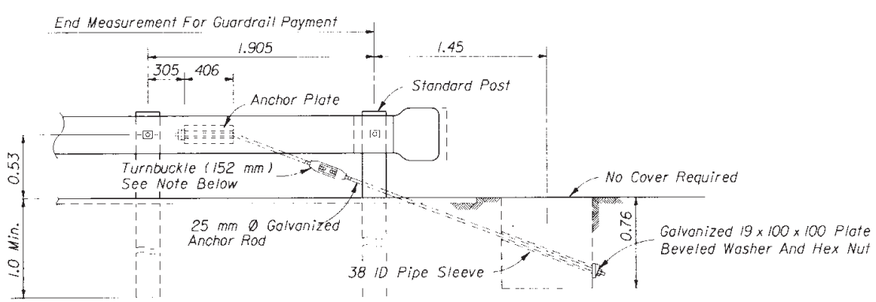

FRONT VIEW

Note:
The payment for the items of End Anchorage Assemblies Type II shall include furnishing and installing anchor plate, anchor rod, pipe sleeve, anchor block, either flared, rounded or buffer end section, and the necessary hardware.

Turnbuckle to be used only for guardrail that is reset vertically. The existing anchor rod (25 or 32 Dia.) shall be field cut, threaded 100 mm on each end, and, metalized in accordance with Sections 562 and 971 of the Standard Specifications. The cost for cutting, threading, metalizing and the turnbuckle shall be included in the contract unit price for Reset Guardrail, Ml.

END ANCHORAGE TYPE II-DETAIL R

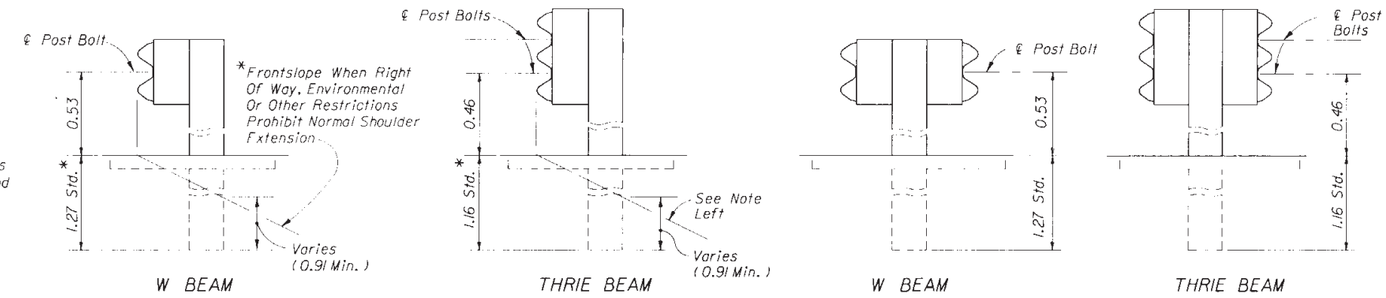

SINGLE FACED GUARDRAIL

DOUBLE FACED GUARDRAIL

MOUNTING HEIGHTS ON SHOULDERS AND IN MEDIANS

POST	OFFSET BLOCK	Remarks
Timber	152 x 203 x 350 Timber or 127 x 203 (Nominal) x 350 Timber	Post bolt hole in timber block to be centered (±6 mm). All timber offset blocks shall be dressed on all four sides (S4S). See note 1 below.
Steel W150 x 13.5 or 152 C	152 x 203 x 350 Timber or 127 x 203 (Nominal) x 350 Timber or W150 x 13.5 x 350 or 152 C x 350 Steel To Match Post	Same as above 16 mm Ø x 38 mm galv. hex head bolts with full length thread and nuts (2 Req'd.) and washers (4 Req'd.) for mounting steel block to post. Bolts are to be installed in opposite holes, top and bottom. See note 2 below.

Notes: 1. Thrie beam blocks are 560 in length.
2. Other offset blocks may be used in accordance with the Qualified Products List unless specified otherwise in the plans.

PERMISSIBLE POST AND OFFSET BLOCK COMBINATIONS

51 mm Ø Galv. Pipe Rail Required For Steel Posts; Begin Pipe 50 mm Before First Post With Threaded Cap. (Pipe Rail To Be Used With Wood Posts Only When Called For In Plans; See Plans For Mounting Details. Bolts To Be Cut Off Flush With Nut And Metalized.)

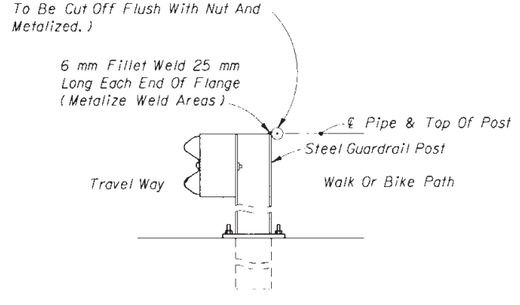

SECTION

Note: Cost of pipe to be included in the contract unit price for Guardrail.

FOR LOCATIONS USED BY SUBSTANTIAL NUMBERS OF PEDESTRIANS, CYCLISTS OR FISHERMEN

SPECIAL SAFETY PIPE RAIL

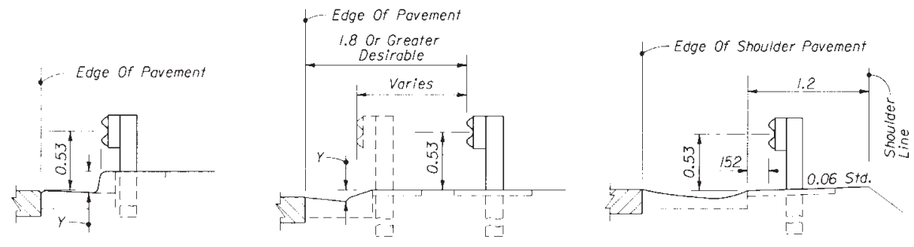

(Maximum Speed 80 km/h) Y = 150 Or Greater

Y = Less Than 150

Shoulder Gutter

LOCATION AT CURB & GUTTER SECTIONS-DETAIL L

STATE OF FLORIDA DEPARTMENT OF TRANSPORTATION
ROAD DESIGN

GUARDRAIL

	Names	Dates
Designed By		
Drawn By	HSD	09/81
Checked By	JBV/JVG	09/81
F.H.W.A. Approved:		10/08/81

Approved By Freddie Simmons
State Roadway Design Engineer

Revision No.	Sheet No.	Index No.
94	11 of 15	400

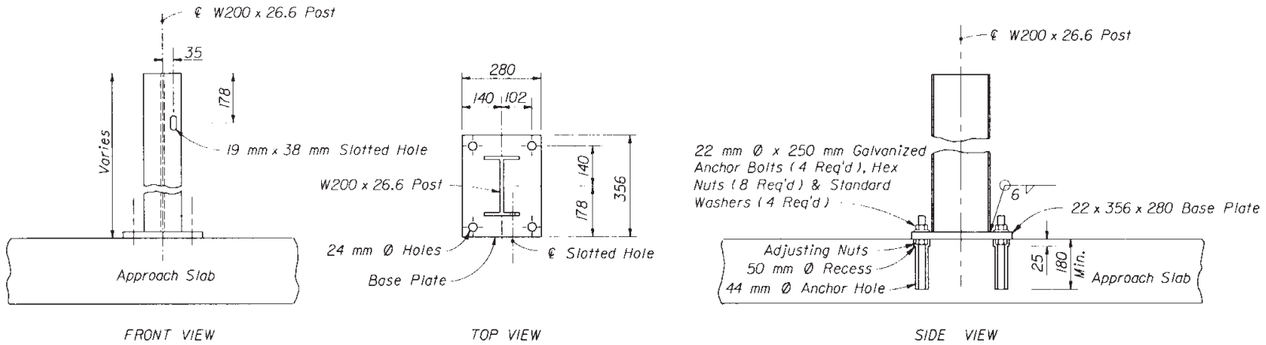

FOR MOUNTING GUARDRAIL ON EXISTING APPROACH SLABS

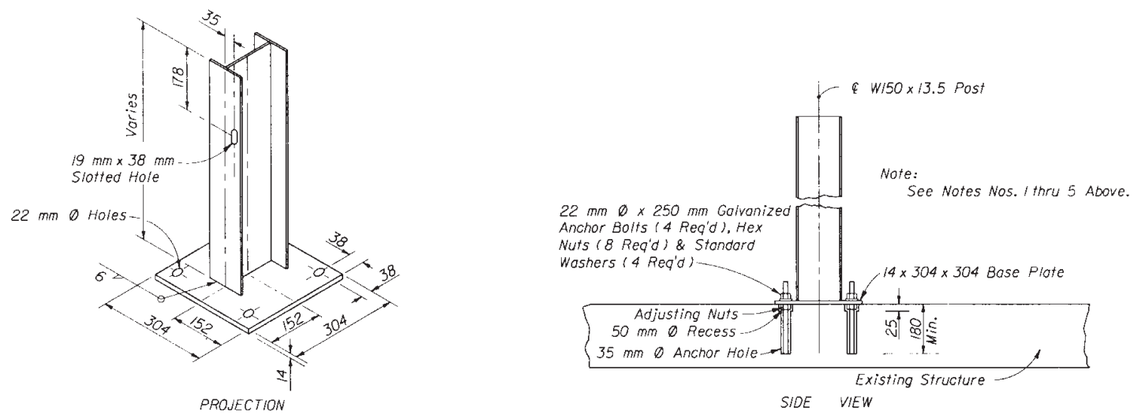

FOR CONSTRUCTION OF GUARDRAIL WHERE CULVERT, PIER FOOTING OR OTHER STRUCTURE PRECLUDES NORMAL POST INSTALLATION

SPECIAL STEEL GUARDRAIL POSTS

NOTES: (SPECIAL STEEL POST)

1. Either anchor bolts, concrete wedge anchors or approved concrete adhesive (chemical) anchors may be used.

   Anchor bolts, wedge anchors and adhesive anchors shall have a minimum tensile strength of 400 MPa and galvanized in accordance with ASTM A153 (stainless steel components may be substituted but components plated in accordance with ASTM B-633 are not acceptable). Adhesive anchor rods shall be equal in diameter to that detailed for anchor bolts. Wedge anchors are to be installed in accordance with the manufacturers recommendations, assuming 21 MPa compressive strength for concrete. Wedge anchors shall also meet the following requirements: (a) tensile load each anchor: approach slabs 62.3 kN; other structures 35.6 kN (b) shear load each anchor: approach slabs 66.7 kN; other structures 34.7 kN.

2. Posts are to be plumbed by adjusting nuts or mortar seating. Posts installed using anchor bolts and adhesive anchors are to be set with adjusting nuts as detailed, unless the Engineer approves the use of mortar seating in lieu of adjusting nuts. Posts installed using wedge anchors are to be set with mortar seating. Base plates shall be grouted with neat finish.

3. Anchor bolts shall be set in approved epoxy mortar. Adhesive anchors shall be set in accordance with the manufacturers recommended adhesive as approved by the Qualified Product List, or as approved by the Engineer.

4. Anchor holes and recesses shall be drilled; wedge anchor holes are to be drilled in accordance with the manufacturers specifications. Encountered reinforcing steel shall be drilled through. Holes shall be thoroughly cleaned when setting bolts and anchors and dry when setting wedge anchors.

5. Steel post and base units shall be galvanized in accordance with ASTM A123. Any damaged galvanized areas are to be metalized in accordance with Section 562 of the Standard Specifications.

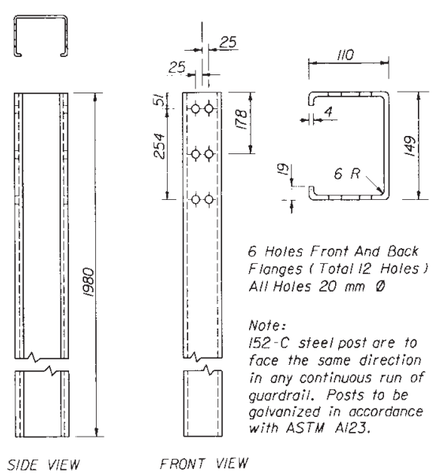

152-C STEEL POST

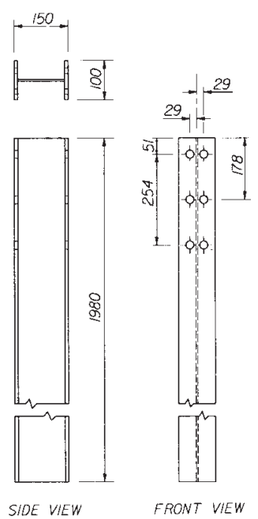

6 Holes Front And Back Flanges (Total 12 Holes) All Holes 20 mm Ø

Note:
W150 x 13.5 steel posts may be either rolled or welded structural shapes conforming to or exceeding the design properties of ASTM A6/A6M. Welding shall be in accordance with the requirements of ASTM A769/A769M. Posts shall be cut to length and the ends seal welded between web and flange before galvanizing. Posts to be galvanized in accordance with ASTM A123.

W150 X 13.5 STEEL POST

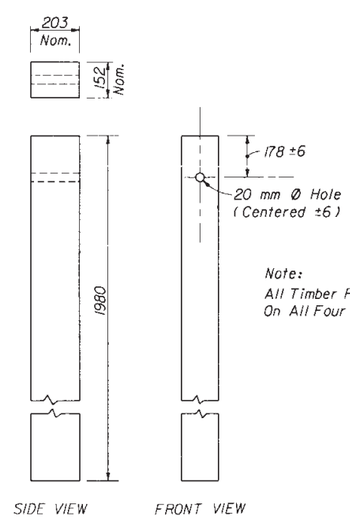

Note:
All Timber Posts Shall Be Dressed On All Four Sides (S4S)

TIMBER POST

STANDARD TIMBER AND STEEL GUARDRAIL POST

STATE OF FLORIDA DEPARTMENT OF TRANSPORTATION
ROAD DESIGN

GUARDRAIL

	Names	Dates
Designed By		
Drawn By	JM	08/81
Checked By	JVG/JBW	08/81
F.H.W.A. Approved:		10/08/81

Approved By Freddie Simmons
State Roadway Design Engineer

Revision No.	Sheet No.	Index No.
94	12 of 15	400

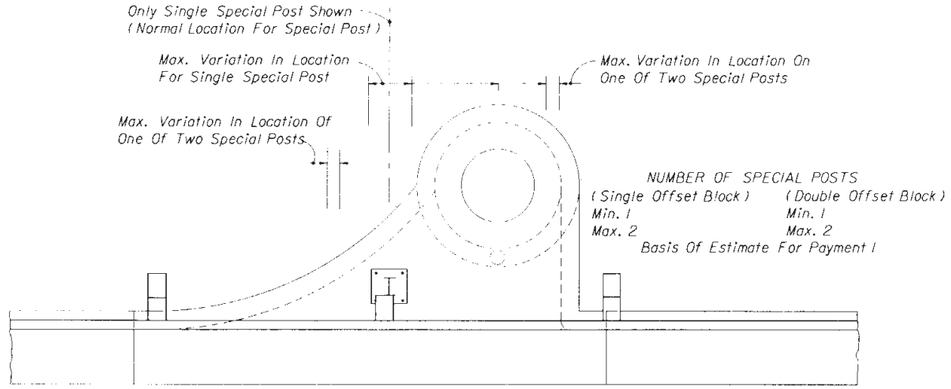

CURB INLET TYPE 1

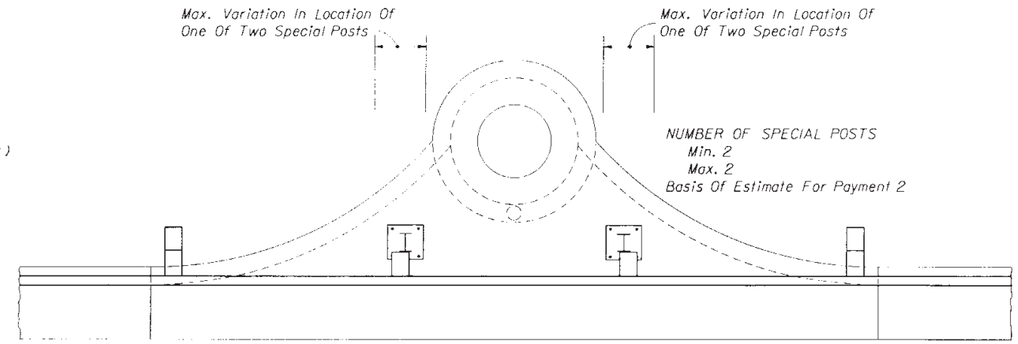

CURB INLET TYPE 2

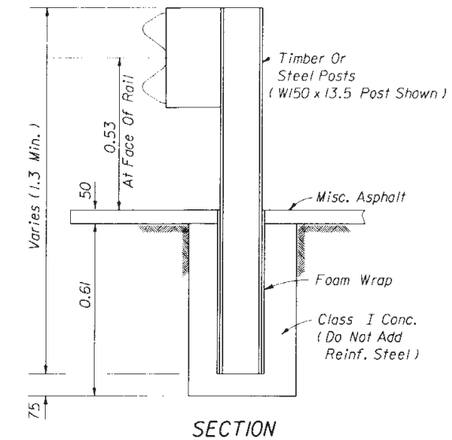

SECTION

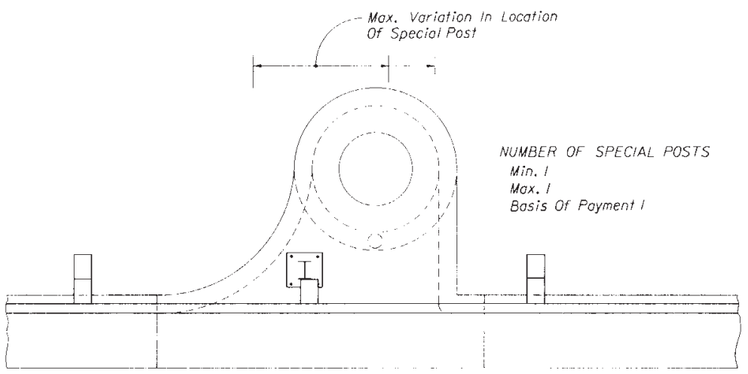

CURB INLET TYPE 3

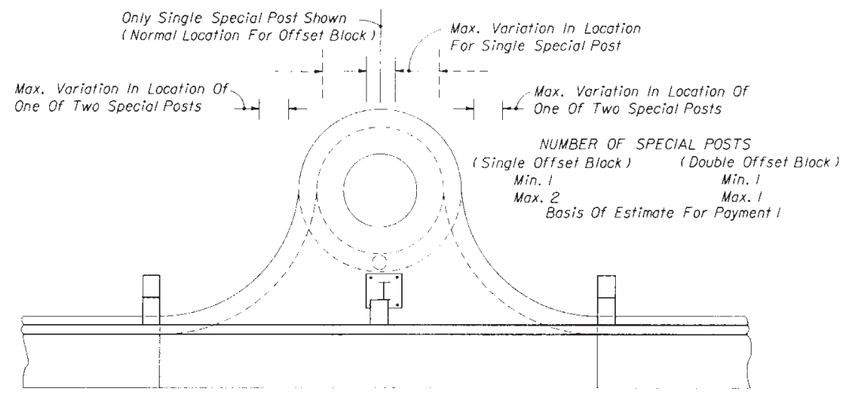

CURB INLET TYPE 4

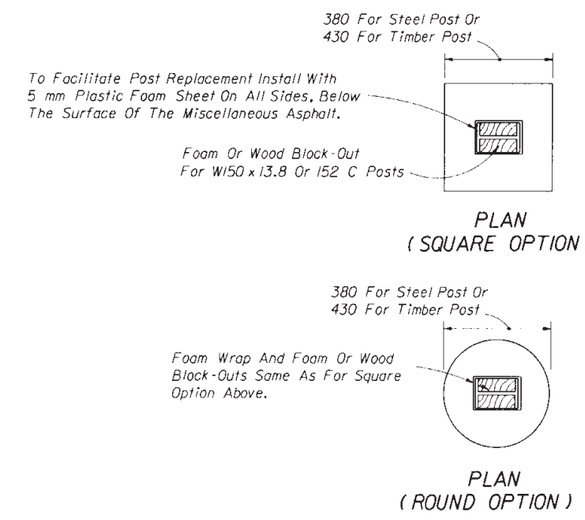

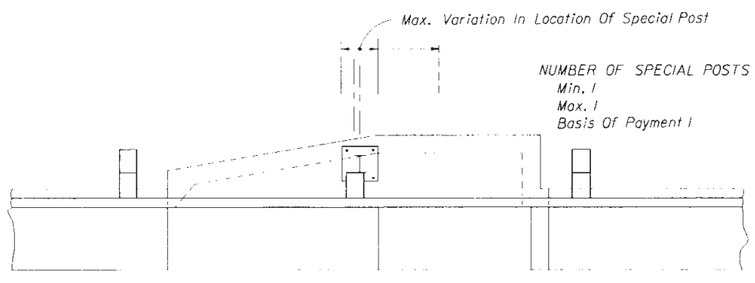

CURB INLET TYPE 5

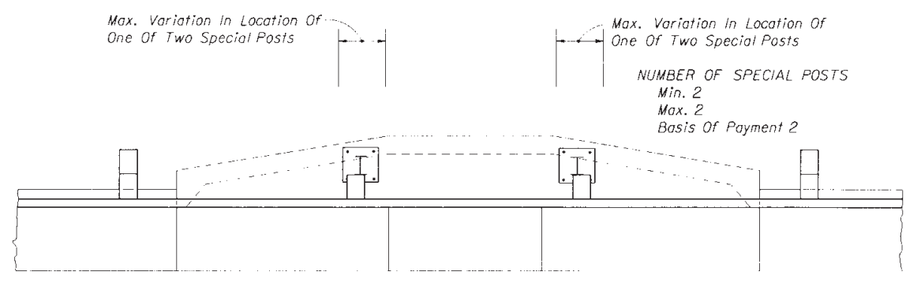

CURB INLET TYPE 6

TO BE USED PRINCIPALLY OVER SHALLOW UTILITIES

ENCASED GUARDRAIL POST

Notes:

1. The locations shown for special posts mounted on inlets are to be used as guidelines for positioning the posts and for estimating the number of required posts.
2. Special posts and their anchorages mounted on curb inlets shall be in accordance with special steel guardrail posts Sheet 12 of 15, and paid for under the contract unit price for Special Guardrail Post, each.
3. Variations shown for the locations of special posts mounted on inlets are established from standard post spacing (1.905 m); clearance of standard posts from inlets (100 mm min.); use of single and double offset blocks on standard posts adjacent to the inlets; optional flange mountings; and, concrete anchor edge distances (50 mm for grouted and 95 mm for expansion anchors). The number of posts and their locations may vary by reducing post spacing and adjusting the length of rail panel (s).
4. Encased guardrail posts shall conform in section to standard timber and steel posts, and be paid for under the contract unit price for Special Guardrail Post, each. Payment shall include cost of foam wrap and concrete encasement.

LEGEND

Variation In Location Of Special Post:

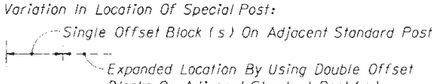

SPECIAL POST LOCATIONS ON CURB INLETS

STATE OF FLORIDA DEPARTMENT OF TRANSPORTATION
ROAD DESIGN

GUARDRAIL

	Names	Dates
Designed By		
Drawn By	HSD	08/83
Checked By	JVG	08/83
F.H.W.A. Approved:		10/06/83

Approved By Freddie Simmons
State Roadway Design Engineer

Revision No.	Sheet No.	Index No.
94	13 of 15	400

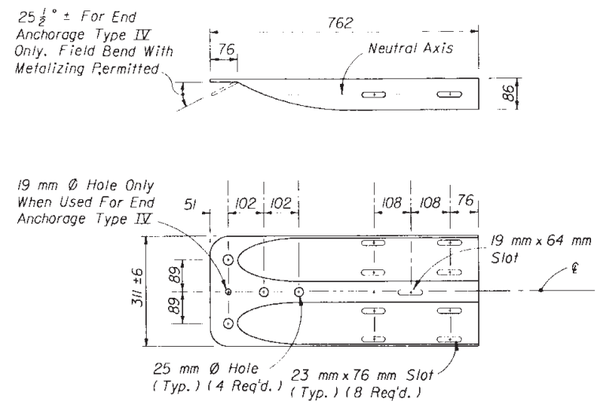

Note: 16 mm Ø Steel washer required with splice bolts

SPECIAL END SHOE

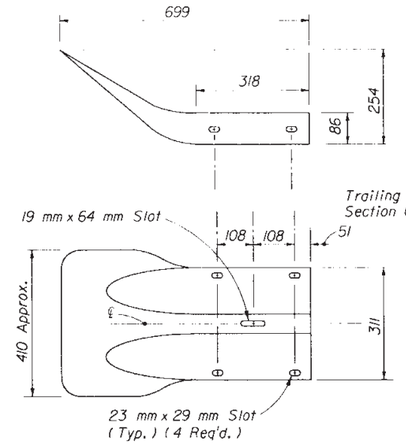

FLARED END SECTION

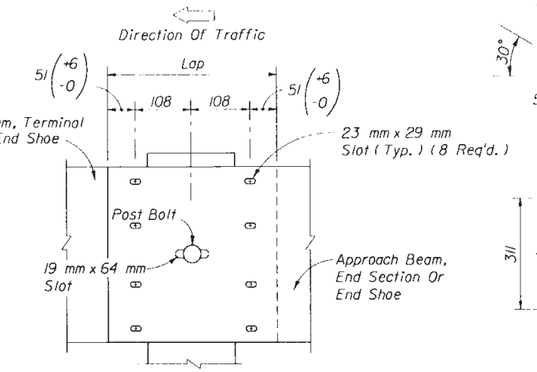

RAIL SPLICE

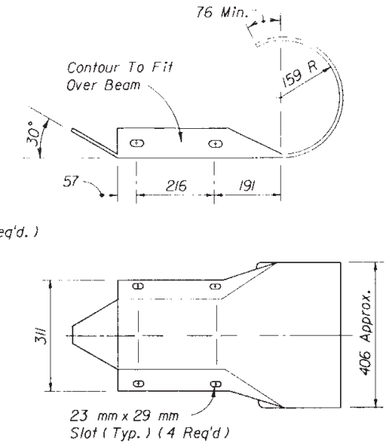

ROUNDED END SECTION

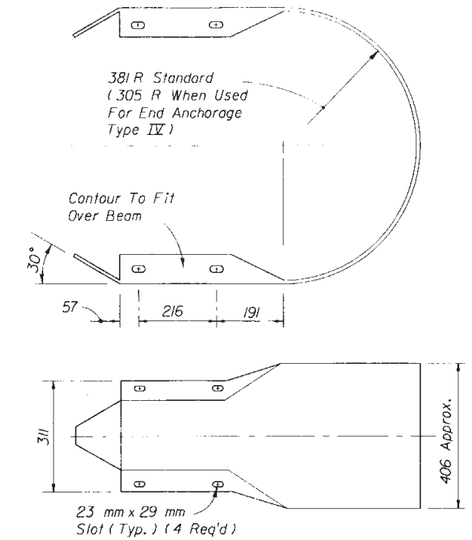

BUFFER END SECTION

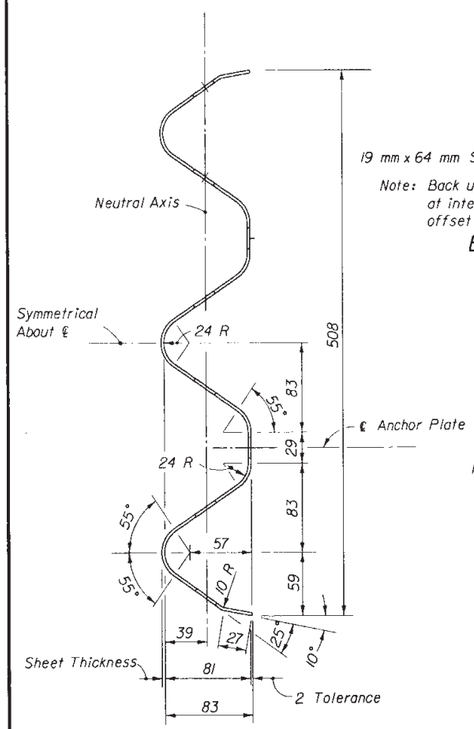

Use of thrie beam is subject to the approval of the State Roadway Design Engineer.

THRIE BEAM

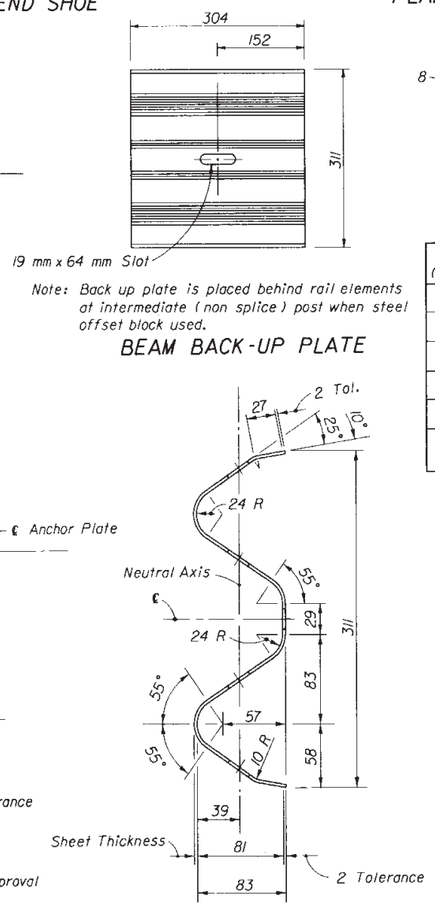

W BEAM

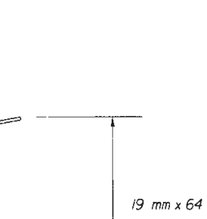

Note: Back up plate is placed behind rail elements at intermediate (non splice) post when steel offset block used.

BEAM BACK-UP PLATE

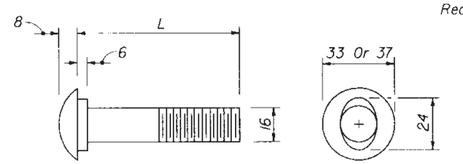

L (mm)	Thread Length (mm)	Application
32	Full Length	Rail Splice Bolt
51	38 Min.	Rail To Steel Offset Block Bolt
241	44 Min.	Post Bolt - Single Or Double Faced Guardrail Timber Block(s) On Steel Post
457	64 Min.	Post Bolt - Single Faced Guardrail Timber Posts
610	51 Min.	Post Bolt - Double Faced Guardrail Timber Posts
Special bolts having lengths of 254 mm or greater shall have a thread length of not less than 51 mm.		

Note: Specifications same as for hex bolts.

16 mm Ø BUTTON HEAD BOLT

Hex bolts shall conform to the requirements of ASTM A307 and hex nuts to the requirements of ASTM A563, Grade A or better. Heavy hex nuts may be used in lieu of hex nuts and hex nuts used for jam nuts.

HEX BOLTS AND NUTS

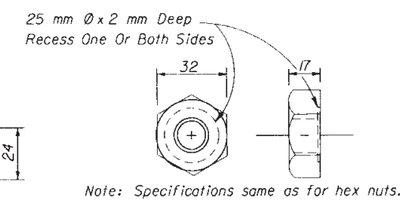

Note: Specifications same as for hex nuts.

16 mm Ø RECESS NUT

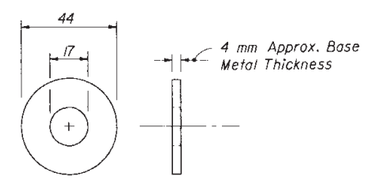

Note: The round washer is not intended for use under the recess nut for the beam to beam rail splice nor intended for use under the recess nut when connecting the rail to steel offset blocks. The washer is required under the recess nut for connecting the rail to the special end shoe; under the post bolt nut for connecting the rail to the timber post and offset block or connecting the rail to steel posts with timber offset blocks; under the hex bolt head for securing the beam anchor plate to the rail; and, for general guardrail connections by 16 mm Ø hex bolts and nuts. For supplemental information see Beam Anchor Plate, Steel Offset Block, Type IV End Anchorage, Special Steel Guardrail Post and Special End Shoe details.

16 mm Ø STEEL WASHER

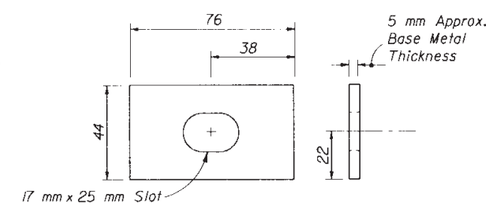

Note: Beam washers are required on the first post and buffer end section of End Anchorages Type IV and at the last two posts of End Anchorages Type II. Washers are to be used where necessary to accomplish alignment or where the post bolt head shows tendency to pull through the rail slot. Washers installed on guardrail, between end anchorages, prior to July 1, 1990 may remain in place until the guardrail is relocated or until repairs require removal and reinstallment of a post bolt.

(RECTANGULAR PLATE WASHER)

BEAM WASHER

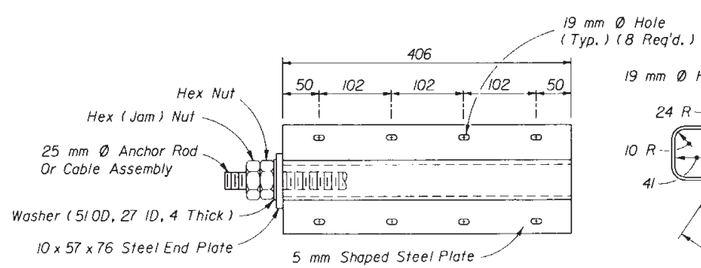

BACK VIEW

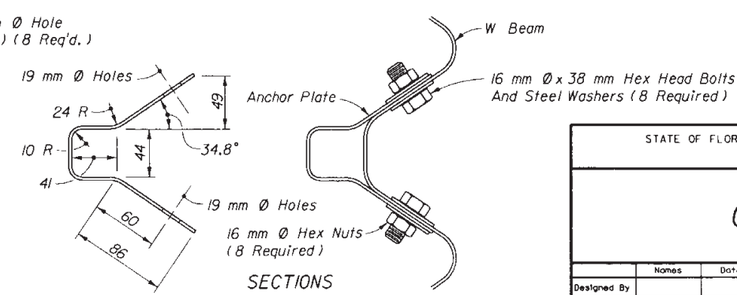

SECTIONS

BEAM ANCHOR PLATE

STATE OF FLORIDA DEPARTMENT OF TRANSPORTATION
ROAD DESIGN

GUARDRAIL

	Names	Dates
Designed By		
Drawn By	HSD	8/81
Checked By	JBW/JVG	8/81
F.H.W.A. Approved:		10/8/81

Approved By Freddie Simmons
State Roadway Design Engineer

Revision No.	Sheet No.	Index No.
94	14 of 15	400

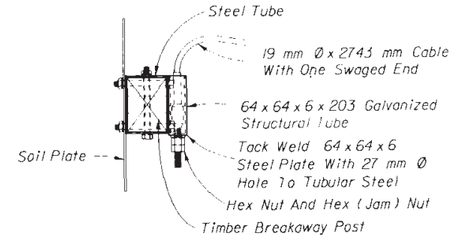

TOP VIEW

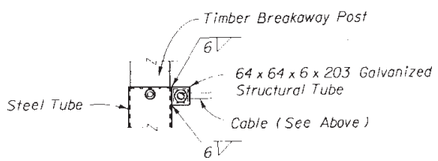

FRONT VIEW

LOWER CABLE ATTACHMENT

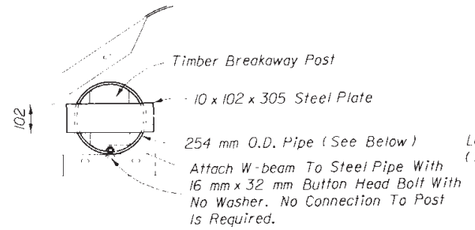

TOP VIEW

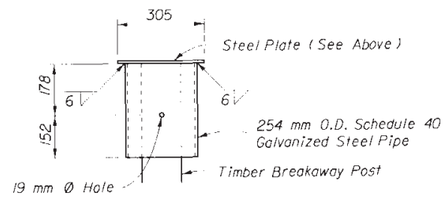

FRONT VIEW

SPECIAL GUARDRAIL PIPE ATTACHMENT

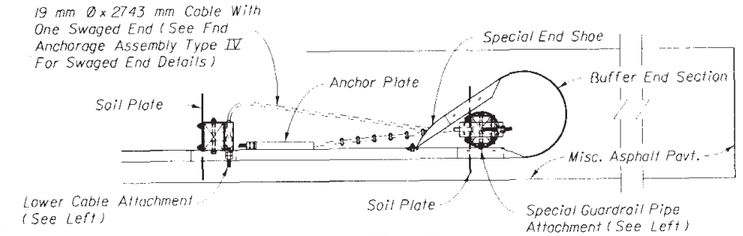

TOP VIEW

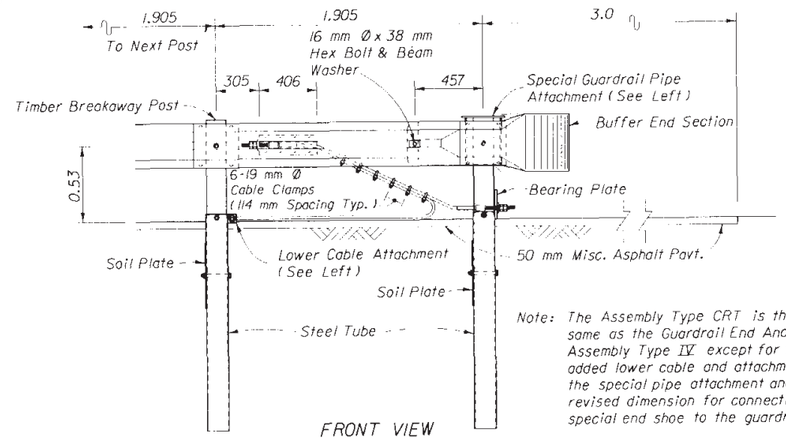

Note: The Assembly Type CRT is the same as the Guardrail End Anchorage Assembly Type IV except for the added lower cable and attachment, the special pipe attachment and the revised dimension for connecting the special end shoe to the guardrail beam.

FRONT VIEW

GUARDRAIL END ANCHORAGE ASSEMBLY TYPE CRT

CONTROLLED RELEASE RETURN NOTES

1. Controlled release returns are intended for use in openings in continuous guardrail for driveway and side road access, and, for shielding the ends of bridge traffic rails and barrier walls where the driveway and sideroad access is in close proximity to the structure and space does not permit the proper use of Guardrail End Anchorage Assemblies Types II and IV.

2. Controlled release returns are not intended as a substitute or replacement for the appropriate use of approved vehicle impact attenuators.

3. Controlled release returns with either 2.44, 4.88 or 7.32 radii are designed for highway speeds of 100 km/h or less; the 9.75 radius return is to be used only for highway speeds of 80 km/h or less.

4. The controlled release returns shown are designed as full returns based on an intersection angle of 90°. The return can be terminated with the Guardrail End Anchorage Assembly Type CRT or connected to standard guardrail as shown or as otherwise detailed in the plans.

5. The Guardrail End Anchorage Assembly Type CRT is to be used only for the controlled release returns with 2.44, 4.88, 7.32 and 9.75 radii as shown; the assembly is not to be used in any tangent rail or flared rail applications. Other types of end anchorage assemblies are not to be used in the controlled release returns.

6. The area immediately behind the control release return shall have slopes not steeper than 1:2 and be maintained free of fixed objects in accordance with the area limits tabulated in the plan below.

7. The surface approaching the controlled release return shall have a transverse slope not exceeding 1:10. The effective width of the transverse surface is to be based on standard vehicle departure, return radii and preceding shielding; the width (beyond shoulder) shall be not greater than the corresponding 5.0 m and 6.0 m 'W' values tabulated below.

8. The curved guardrail portion of the controlled release return shall be full section shop bent panels (3.81 m or 7.62 m panels).

9. Washers are not to be used between the guardrail beam and the head of the button head post bolts at any controlled release terminal (CRT) post or at any Guardrail End Anchorage Terminal Type CRT breakaway timber post.

10. The guardrail beam of the 2.44 radius return is not bolted to the center control release post.

11. Curved W-beam Guardrail systems shall be paid for under the contract unit prices for Guardrail (Roadway), MI, Guardrail (Shop-bent Panels), MI, and Guardrail End Anchorage Assembly Type CRT, EA. and shall include furnishing and installing all components in accordance with this index. CRT posts are included in the cost for guardrail.

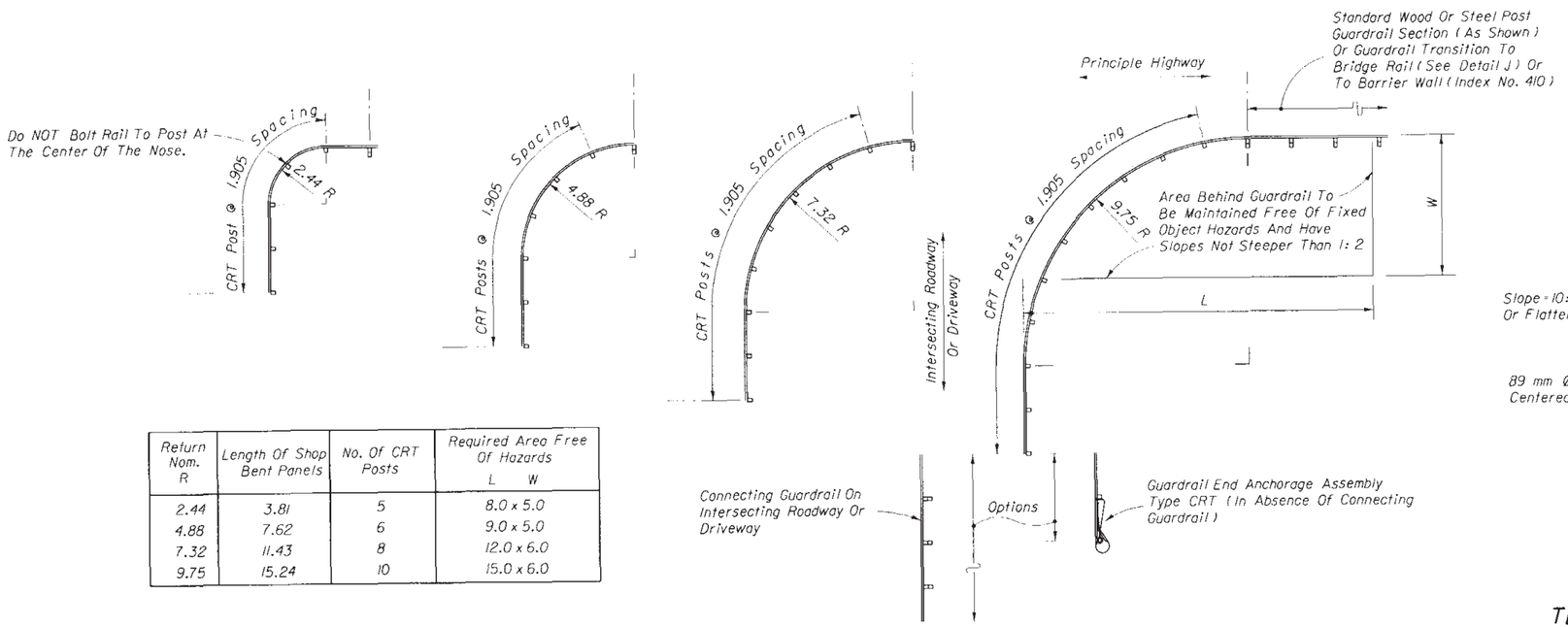

Return Nom. R	Length Of Shop Bent Panels	No. Of CRT Posts	Required Area Free Of Hazards L W
2.44	3.81	5	8.0 x 5.0
4.88	7.62	6	9.0 x 5.0
7.32	11.43	8	12.0 x 6.0
9.75	15.24	10	15.0 x 6.0

PLAN (OPTIONAL RADII)

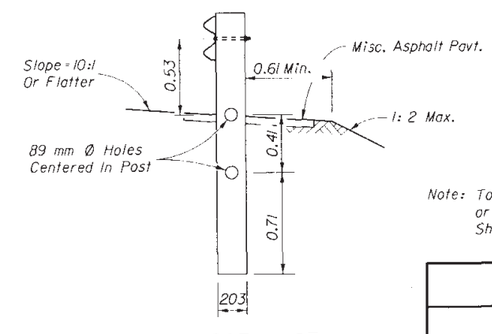

152 x 203 x 1.83
CONTROLLED RELEASING TERMINAL (CRT) WOOD POST

Note: To be constructed when standard flares and transitions or standard radial returns can not be applied. See Sheet 6.

CONTROLLED RELEASE RETURN FOR SIDE ROAD AND DRIVEWAY ACCESS

STATE OF FLORIDA DEPARTMENT OF TRANSPORTATION
ROAD DESIGN

GUARDRAIL

	Names	Dates
Designed By	FHWA	
Drawn By	HSD	1/93
Checked By	JVG	1/93
F.H.W.A. Approved:		

Approved By: Freddie Simmons
State Roadway Design Engineer

Revision No.	Sheet No.	Index No.
94	15 of 15	400

GENERAL NOTES

1. Whether an existing bridge handrail is to remain in place, be retrofitted or be replaced, is a determination that must be made independent of any information contained on this index.

   Only after it has been established that an existing bridge handrail is to remain in place is this index to be used to analyze guardrail to bridge connections.

2. The schemes on this index are not to be used for new bridge construction, bridge widening, bridge barrier wall or handrail replacement, or, for existing bridges that have wing posts for guardrail connection that conform with configurations shown in current Roadway Design Standards and Bridge Design Standards.

3. The schemes on this index are divided into two general categories, representing curbed and uncurbed roadway approaches. A scheme selection guide is provided under 'Designer Notes' for curbed and uncurbed roadway approaches. Approach slabs with curbs or wing walls with radial safety curbs will be treated as curbed roadway approaches.

4. Existing bridge features shown in these schemes are example configurations only. The principle key to scheme selection is bridge curb or sidewalk width. Location control is keyed to bridge face of curb, except for certain trailing conditions.

5. Details that are repetitive on the schemes and features that are detailed on Index No. 400 have been purposely deleted to produce clarity and simplification in the schemes, and to emphasize proper location and positioning of the anchorage and connecting guardrail.

6. All schemes are right side or right hand details for traffic flow right to left. Left side applications are opposite hand.

7. For undivided two-way bridges 'trailing end', as used in this index, is in relation to the direction of travel of near lane traffic, but it is always considered as an approach for opposing lane traffic.

8. All connections of guardrail special end shoes to concrete anchorage posts, panels and walls shall have a 6 x 300 x 300 galvanized steel back-up plate for gang tightening of hex nuts on 22 mm diameter galvanized anchor bolts. Special end shoe anchor bolts shall have a nominal length equal to the thickness of the concrete anchorage plus 40 mm.

   When thru bolts would penetrate existing bridge rails, 22 mm diameter bolt clusters and chemical anchor bolts meeting the manufacturers recommendation may be substituted as approved by the Engineer.

9. Unless otherwise called for in the plans exposed concrete surfaces shall have a Class 3 surface finish and Class 5 Applied Finish Coating in accordance with Sections 521 and 400 respectively of the Standard Specifications.

10. The guardrail end anchorage schemes on this index do not include cost for payment of guardrail. See Index 400 Detail N for limit of guardrail measurement.

    Each independent anchorage described in these schemes shall be paid for as a bridge end anchorage assembly under the contract unit price for Bridge Anchorage Assembly, Each. The unit price shall be full compensation for the following :
    - (a) Each concrete anchor post, panel or transition wall including reinforcing steel, existing rail or rail and post removal, socket filling, bond breaker, post beveling, drilling, dowels, grouting, excavation, backfill, special end shoe and accessory items.
    - (b) Each guardrail steel terminal post, including flared end section, anchorage and accessory items (optional use not included).
    - (c) Each special end shoe anchored directly to an existing bridge end post or wing post, including back-up plate and accessory items.

    Continuous concrete safety barrier (Schemes 1 & 19) shall be paid for as a roadway item under the contract unit price for Concrete Handrail (Retrofit Barrier) (Vert Face), MI.

    Continuous guardrail across bridges shall be paid for as a roadway item under the contract unit price for Guardrail (Bridge) MI, and Special Guardrail Post, Each. The unit price for guardrail shall include the cost for all accessories prescribed under Index No. 400 and the unit price for special posts shall include the cost for all accessories and anchorage prescribed in Index 400 and in Scheme 16 of this Index.

DESIGN NOTES

1. The details in this index are intended to be used for existing bridges that have end and approach slab configurations constructed under former Department standards; and, are not intended to preclude special design details more suited to bridges with unusual handrail or wingpost configurations, or, when there is conflict with drainage structures or other features that can not be adjusted.

2. The schemes provide the designer with a convenient method of providing standardized information on the plans. In the selection and assignment of schemes the designer must predetermine existing bridge handrail, curb, sidewalk and approach slab conditions, particularly the location of embedded conduit. Special attention must be directed to the presence or absence of curbed approaches on each independent corner of the bridge.

3. Each corner of the bridge that requires a guardrail connection should be labeled independently by scheme number, and, where continuous barrier is required across a bridge the scheme number should be labeled independently on the side(s) of the bridge. When continuous guardrail is called for, bridge end anchorage assemblies will be omitted, but, when continuous concrete safety barrier is called for, one or more bridge end anchorage assemblies will be labeled on the plans.

4. The scheme selection guide below is to be used as a quick reference for determining anchorages and continuous barriers that are applicable to specific conditions for existing bridges. When appropriate, special details are to be used in lieu of schemes or to supplement or complement the scheme details. In selecting schemes the width of curb, safety curb and sidewalk is the distance from face of curb to the nearest face of post, rail or parapet.

SCHEME SELECTION GUIDE (NUMBERS)

	WITH ROADWAY CURBS APPROACHING BRIDGES Sheets 2 thru 6		WITHOUT ROADWAY CURBS APPROACHING BRIDGES Sheets 7 thru 9	
ONE-WAY BRIDGES	APPROACH END	TRAILING END	APPROACH END	TRAILING END
Handrail Curb	3, 4, 18	3, 4, 18	21, 22, 27, 30	23, 27, 30
Narrow Curb	2, 3, 8, 9, 10, 11, 12, 13, 14	2, 3, 8, 15	20, 21, 27, 29	23, 27, 29
Wide Safety Curb	1, 2, 8, 11, 12, 13, 14, 15, 16, 17	1, 2, 8, 11, 12, 13, 14, 15, 16	19, 20, 28, 29	19, 23, 29
Sidewalks	1, 16	1, 16	19	19
TWO-WAY BRIDGES	APPROACH AND TRAILING ENDS		APPROACH AND TRAILING ENDS	
Handrail Curb	3, 4, 9, 10, 18		21, 22, 26, 30	
Narrow Curb	2, 3, 6, 7, 9, 10, 11, 12, 13, 14		20, 21, 25, 29	
Wide Safety Curb	1, 2, 5, 6, 9, 10, 11, 12, 13, 14, 16		19, 20, 24, 25, 29	
Sidewalks	1, 16		19	

STATE OF FLORIDA DEPARTMENT OF TRANSPORTATION
ROAD DESIGN

GUARDRAIL ANCHORAGE AND CONTINUOUS BARRIER FOR EXISTING BRIDGES

	Names	Dates
Designed By	JVG	09/86
Drawn By	HSD	09/86
Checked By	JVG	09/86

Approved By Freddie Simmons
State Roadway Design Engineer

F.H.W.A. Approved:

Revision No.	Sheet No.	Index No.
94	1 of 9	401

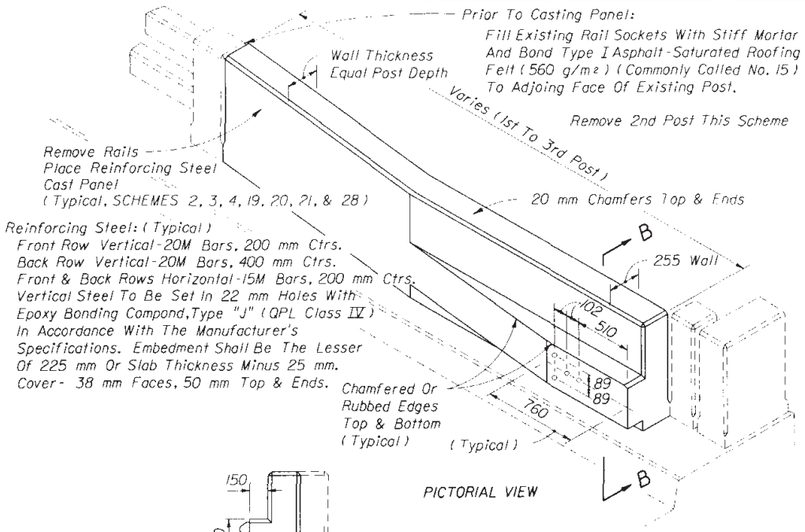

APPLICATIONS

SAFETY CURB 330 mm TO 610 mm WIDE
POST AND DISCOUNTINUOUS BEAM RAILING
APPROACH AND TRAILING ENDS OF TWO-WAY BRIDGES
APPROACH END OF ONE-WAY BRIDGES
TRAILING END OF ONE-WAY BRIDGES WHEN OTHER HAZARDS PRESENT

SCHEME 2

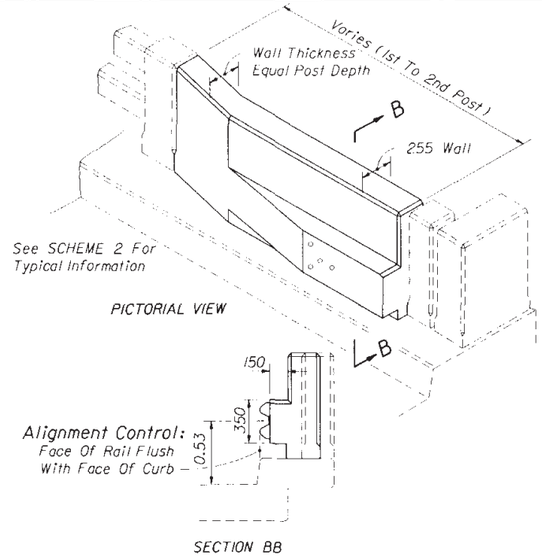

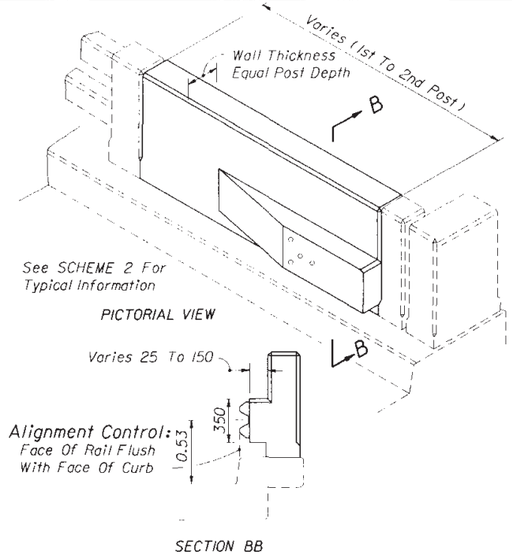

CURBS 100 mm TO 305 mm WIDE-DEPICTIONS ARE FOR 230 mm AND 305 mm WIDTHS

APPLICATIONS

SAFETY CURB 305 mm OR LESS IN WIDTH
POST AND DISCOUNTINUOUS BEAM RAILING
APPROACH AND TRAILING ENDS OF TWO-WAY BRIDGES-WAY BRIDGES
APPROACH END OF ONE-WAY BRIDGES
TRAILING END OF ONE-WAY BRIDGES WHEN OTHER HAZARDS PRESENT

SCHEME 3

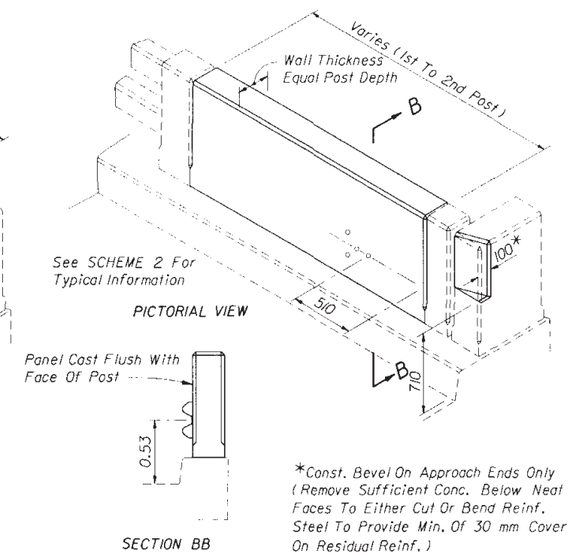

*Const. Bevel On Approach Ends Only (Remove Sufficient Conc. Below Neat Faces To Either Cut Or Bend Reinf. Steel To Provide Min. Of 30 mm Cover On Residual Reinf.)

APPLICATIONS

HANDRAIL CURB
POST AND DISCOUNTINUOUS BEAM RAILING
APPROACH AND TRAILING ENDS OF TWO-WAY BRIDGES
APPROACH END OF ONE-WAY BRIDGES
TRAILING END OF ONE-WAY BRIDGES WHEN OTHER HAZARDS PRESENT

SCHEME 4

CAST IN PLACE PANELS

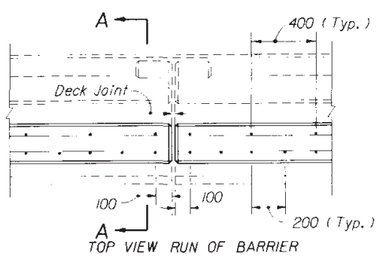

TOP VIEW RUN OF BARRIER

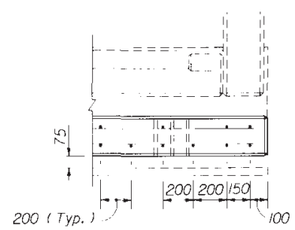

TOP VIEW

Estimated Quantities (Per Ml)
Class II Concrete 0.17 m³
Reinforcing Steel 20 kg

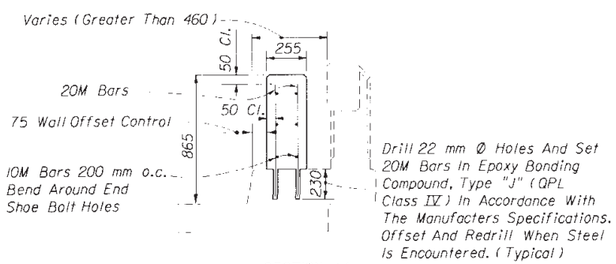

SECTION AA

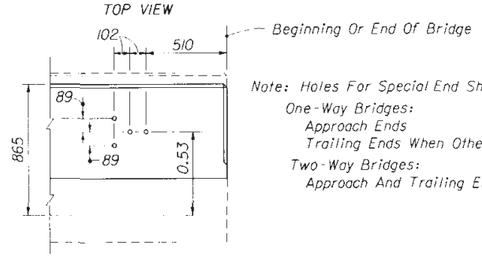

FRONT VIEW

Note: Holes For Special End Shoe Required:
One-Way Bridges:
Approach Ends
Trailing Ends When Other Hazards Present
Two-Way Bridges:
Approach And Trailing Ends

APPLICATIONS

SAFETY CURB WIDER THAN 460 mm AND SIDEWALKS CONTINUOUS BARRIER ACROSS BRIDGE

SCHEME 1

CONCRETE SAFETY BARRIER

BRIDGES WITH APPROACHING ROADWAY CURB

STATE OF FLORIDA DEPARTMENT OF TRANSPORTATION
ROAD DESIGN

GUARDRAIL ANCHORAGE AND CONTINUOUS BARRIER FOR EXISTING BRIDGES

	Names	Dates
Designed By	JVG	09/86
Drawn By	HSD	09/86
Checked By	JVG	09/86

Approved By Freddie Simmons
State Roadway Design Engineer

F.H.W.A. Approved:	Revision No.	Sheet No.	Index No.
	94	2 of 9	401

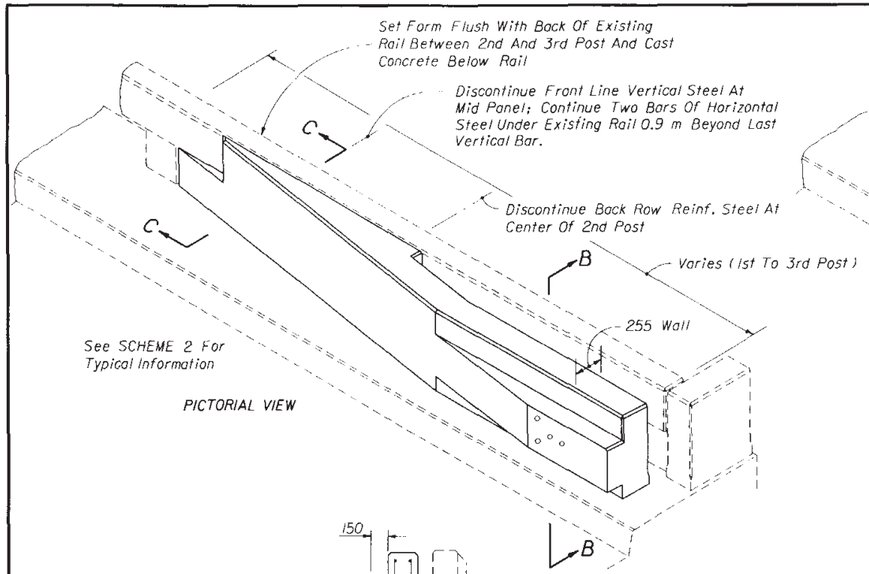

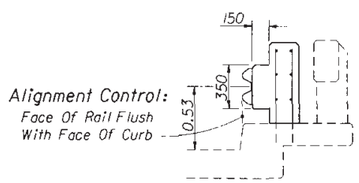

APPLICATIONS

SAFETY CURB 610 mm WIDE
CONCRETE CONTINUOUS BEAM RAILING
APPROACH AND TRAILING ENDS OF TWO-WAY BRIDGES
TRAILING END OF ONE-WAY BRIDGES WHEN OTHER HAZARDS PRESENT

SCHEME 5

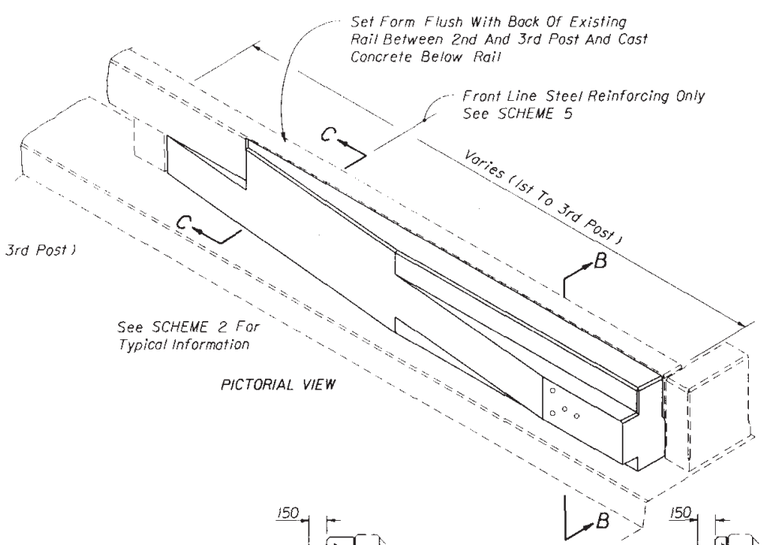

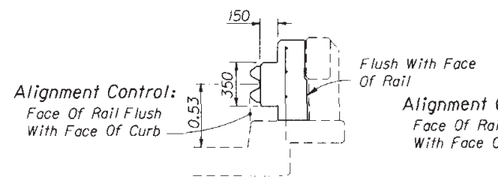

CURBS 460 mm TO 585 mm WIDE (460 mm SHOWN)

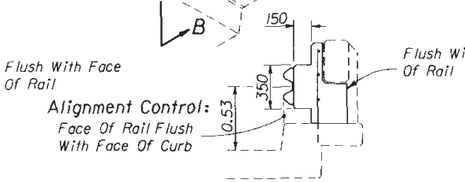

CURBS 330 mm TO 430 mm WIDE (330 mm SHOWN)

APPLICATIONS

SAFETY CURB 330 mm TO 585 mm WIDE
CONCRETE CONTINUOUS BEAM RAILING
APPROACH AND TRAILING ENDS OF TWO-WAY BRIDGES (CURBS 330 mm TO 585 mm WIDE)
TRAILING END OF ONE-WAY BRIDGES WHEN OTHER HAZARDS PRESENT (CURBS 510 mm TO 585 mm WIDE)

SCHEME 6

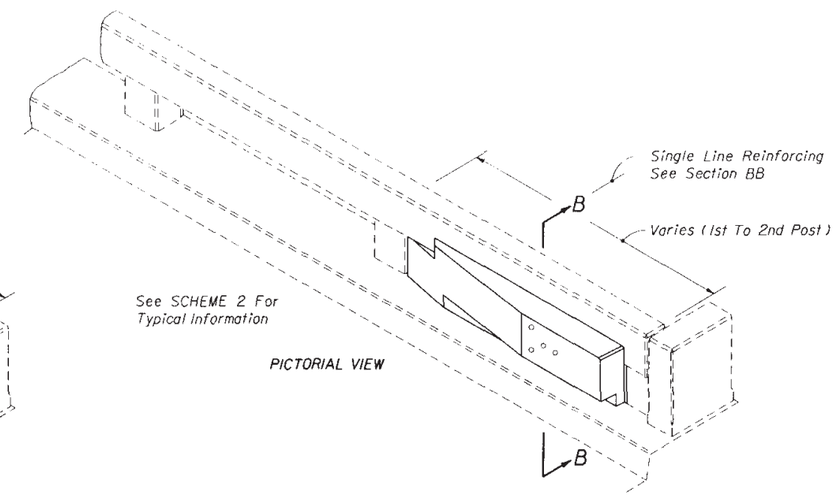

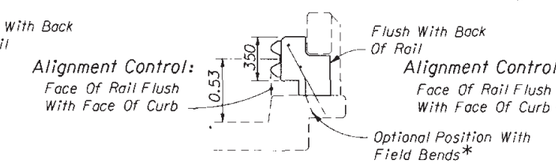

(305 mm CURBS SHOWN)

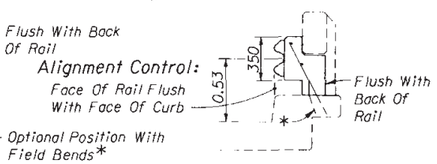

(230 mm CURBS SHOWN)

APPLICATIONS

SAFETY CURB 230 mm TO 305 mm WIDE
CONCRETE CONTINUOUS BEAM RAILING
APPROACH AND TRAILING ENDS OF TWO-WAY BRIDGES

SCHEME 7

CAST IN PLACE PANELS

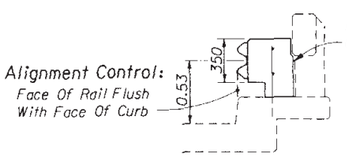

CURBS 430 mm TO 480 mm WIDE (480 mm SHOWN)

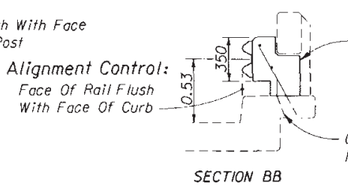

CURBS 230 mm TO 405 mm WIDE (305 mm SHOWN)

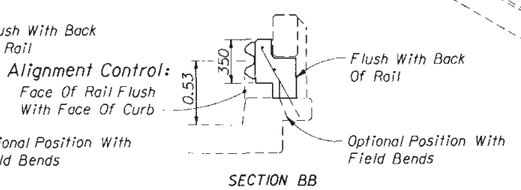

CURBS 230 mm TO 405 mm WIDE (230 mm SHOWN)

APPLICATIONS

SAFETY CURB 230 mm TO 480 mm WIDE
CONCRETE CONTINUOUS BEAM RAILING
APPROACH END OF ONE-WAY BRIDGES
TRAILING END OF ONE-WAY BRIDGES WHEN OTHER HAZARDS PRESENT

SCHEME 8

CAST IN PLACE PANELS

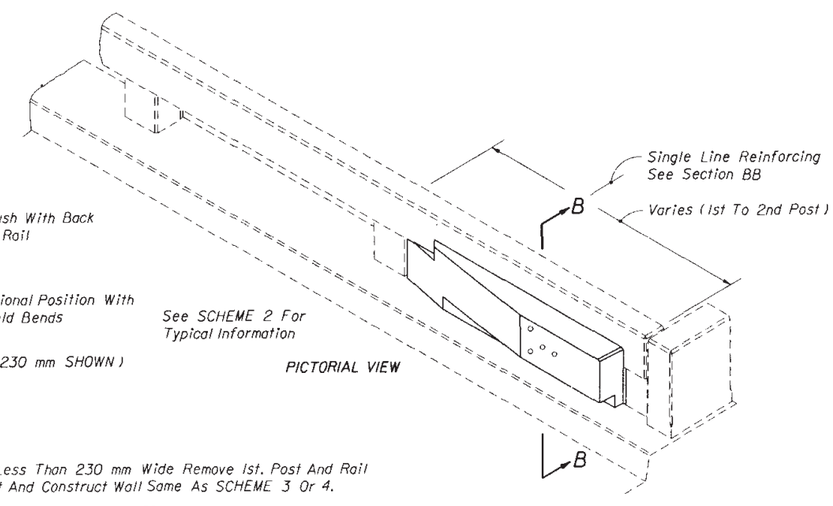

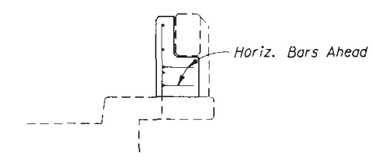

SECTION CC (SCHEMES 5, 6 & 8)

Note: For Curbs Less Than 230 mm Wide Remove 1st. Post And Rail To 2nd Post And Construct Wall Same As SCHEME 3 Or 4.

For Safety Curbs Wider Than 480 mm See SCHEME 5, 6 & 9.

BRIDGES WITH APPROACHING ROADWAY CURB

STATE OF FLORIDA DEPARTMENT OF TRANSPORTATION
ROAD DESIGN

GUARDRAIL ANCHORAGE AND CONTINUOUS BARRIER FOR EXISTING BRIDGES

	Names	Dates
Designed By	JVG	09/86
Drawn By	HSD	09/86
Checked By	JVG	09/86
F.H.W.A. Approved:		

Approved By Freddie Simmons
State Roadway Design Engineer

Revision No.	Sheet No.	Index No.
94	3 of 9	401

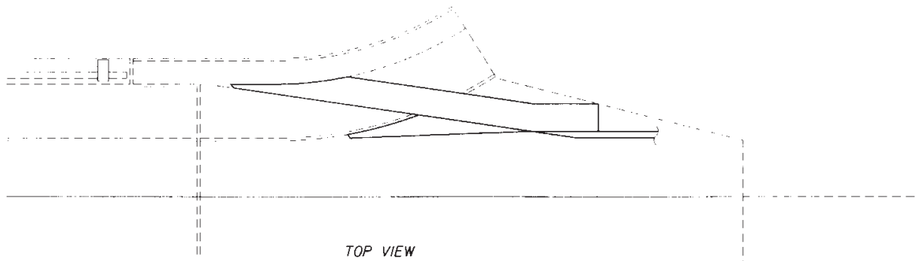

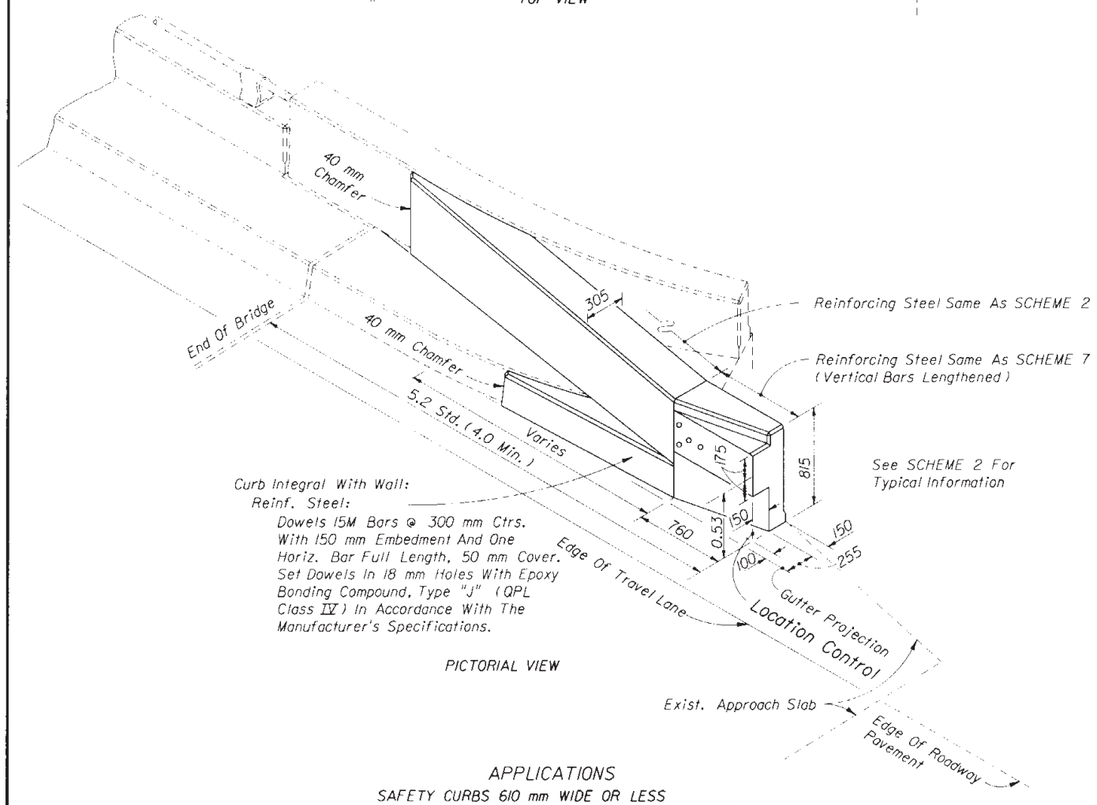

PICTORIAL VIEW

APPLICATIONS

SAFETY CURBS 610 mm WIDE OR LESS
CONCRETE PARAPET WITH METAL PIPE RAILING
APPROACH AND TRAILING ENDS OF TWO-WAY BRIDGES
APPROACH END OF ONE-WAY BRIDGES
APPROACH SLAB FOUNDATION

SCHEME 9

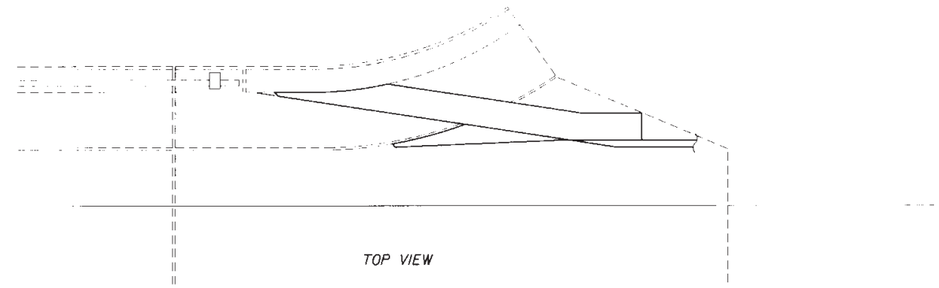

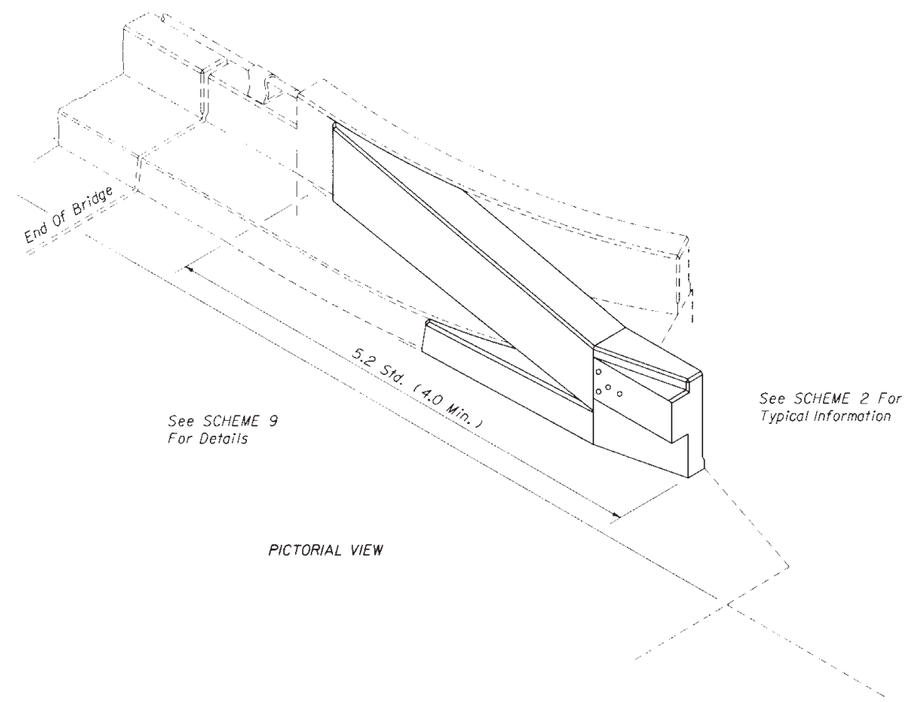

PICTORIAL VIEW

APPLICATIONS

SAFETY CURBS 610 mm WIDE OR LESS
CONCRETE PARAPET WITH METAL PIPE RAILING
APPROACH AND TRAILING ENDS OF TWO-WAY BRIDGES
APPROACH END OF ONE-WAY BRIDGES
APPROACH SLAB FOUNDATION

SCHEME 10

CAST IN PLACE TRANSITION WALL

BRIDGE WITH APPROACHING ROADWAY CURB

STATE OF FLORIDA DEPARTMENT OF TRANSPORTATION
ROAD DESIGN

GUARDRAIL ANCHORAGE AND CONTINUOUS BARRIER FOR EXISTING BRIDGES

	Names	Dates
Designed By	JVG	09/86
Drawn By	HSD	09/86
Checked By	JVG	09/86

Approved By: Freddie Simmons
State Roadway Design Engineer

Revision No.	Sheet No.	Index No.
94	4 of 9	401

F.H.W.A. Approved:

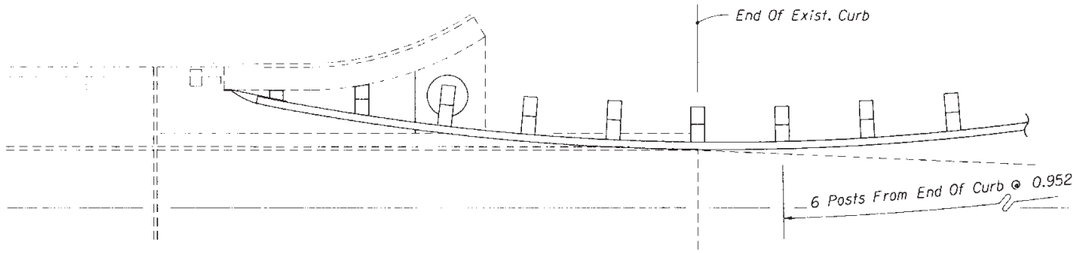

See SCHEME 11 For Additional Information

APPLICATIONS

SAFETY CURB 610 mm WIDE OR LESS
APPROACH AND TRAILING ENDS OF TWO-WAY BRIDGES
APPROACH END OF ONE-WAY BRIDGES
TRAILING END OF ONE-WAY BRIDGES WHEN OTHER HAZARDS PRESENT

SCHEME 12

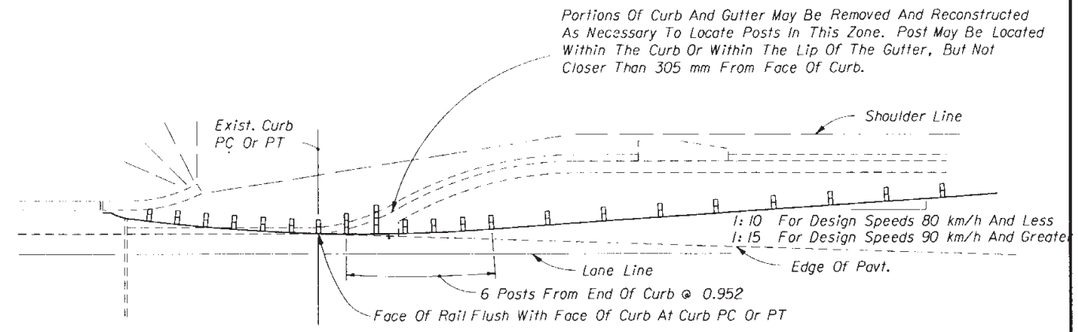

See SCHEMES 11 & 12 For Additional Information

APPLICATIONS

SAFETY CURB 610 mm WIDE OR LESS
APPROACH AND TRAILING ENDS OF TWO-WAY BRIDGES
APPROACH END OF ONE-WAY BRIDGES
TRAILING END OF ONE-WAY BRIDGES WHEN OTHER HAZARDS PRESENT

SCHEME 13

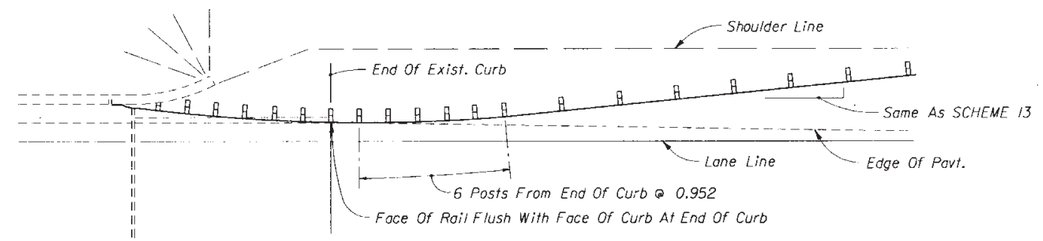

See SCHEMES 11 & 12 For Additional Information

APPLICATIONS

SAFETY CURB 610 mm WIDE OR LESS
APPROACH AND TRAILING ENDS OF TWO-WAY BRIDGES
APPROACH END OF ONE-WAY BRIDGES
TRAILING END OF ONE-WAY BRIDGES WHEN OTHER HAZARDS PRESENT

SCHEME 14

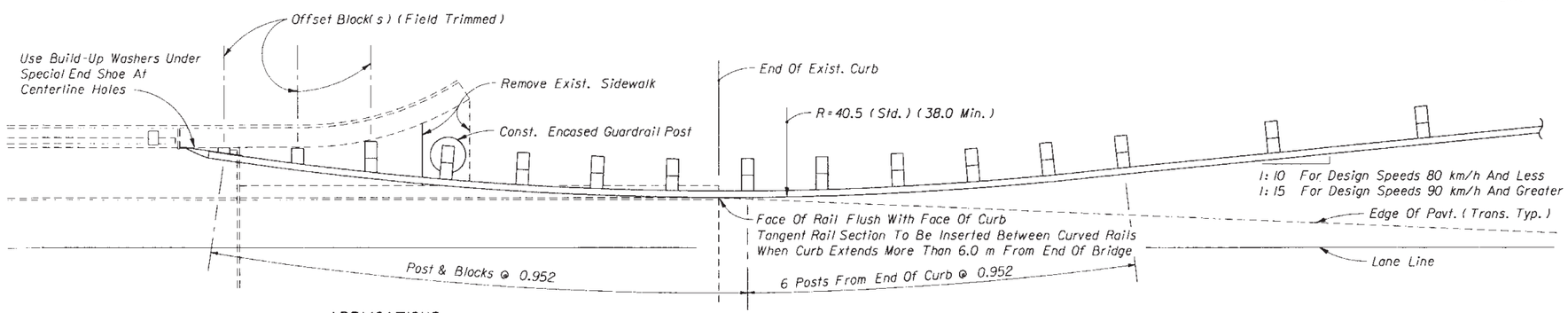

APPLICATIONS

SAFETY CURB 610 mm WIDE OR LESS
APPROACH AND TRAILING ENDS OF TWO-WAY BRIDGES
APPROACH END OF ONE-WAY BRIDGES
TRAILING END OF ONE-WAY BRIDGES WHEN OTHER HAZARDS PRESENT

SCHEME 11

CURVILINEAR GUARDRAIL

BRIDGES WITH APPROACHING ROADWAY CURB

STATE OF FLORIDA DEPARTMENT OF TRANSPORTATION
ROAD DESIGN

GUARDRAIL ANCHORAGE AND CONTINUOUS BARRIER FOR EXISTING BRIDGES

	Names	Dates
Designed By	JVG	09/86
Drawn By	HSD	09/86
Checked By	JVG	09/86

Approved By Freddie Simmons
State Roadway Design Engineer

Revision No.	Sheet No.	Index No.
94	5 of 9	401

F.H.W.A. Approved:

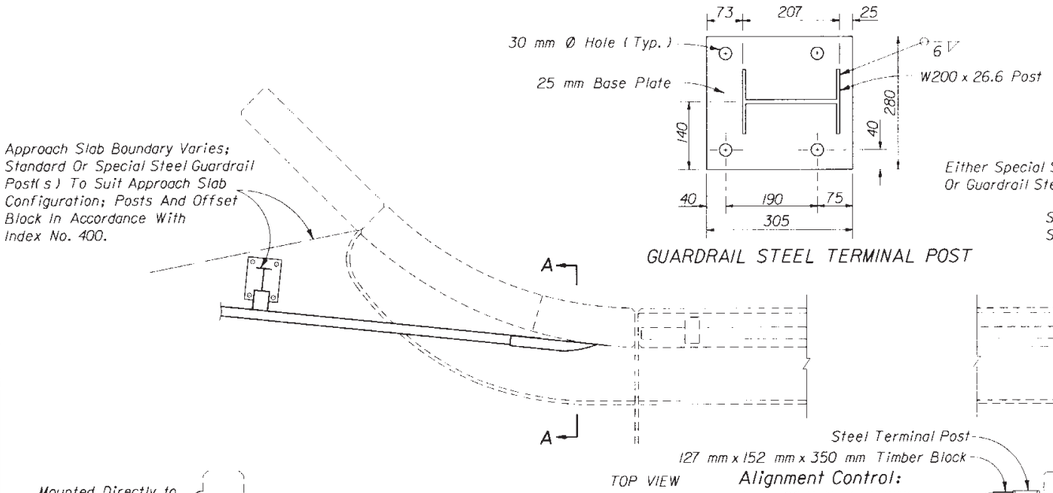

TRAILING END:
SAFETY CURB 610 mm OR LESS IN WIDTH

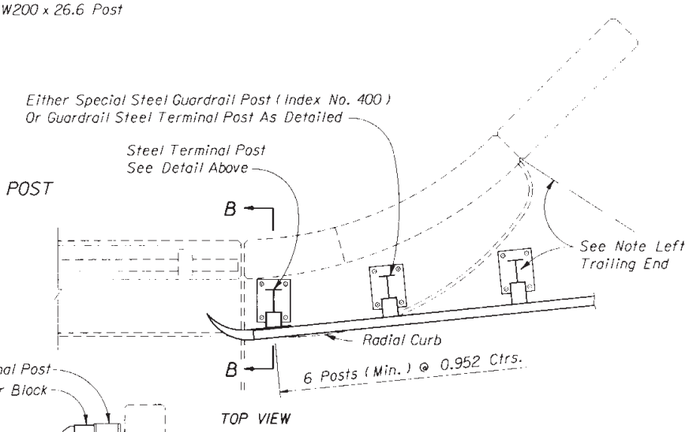

APPROACH END:
SAFETY CURBS 460 mm TO 610 mm WIDE

APPLICATIONS
SAFETY CURB 610 mm OR LESS IN WIDTH
APPROACH END OF ONE-WAY BRIDGES
TRAILING END OF ONE-WAY BRIDGES WHEN OTHER HAZARDS PRESENT

*Optional Anchor Bolt:
27 mm Ø Molly Chemical Anchor (Parabond) (Polyester Resin/Aggregate Capsule);
27 mm Ø Hilti Chemical Anchor (HVA) (Polyester Resin/Aggregate Capsule);
Or Equal 27 mm Ø Chemical Anchor As Approved By The Engineer.
Anchors Shall Be Installed In Accordance With Manufacturers Recommendations.

SCHEME 15

STEEL ANCHOR POST AT RADIAL WING WALL

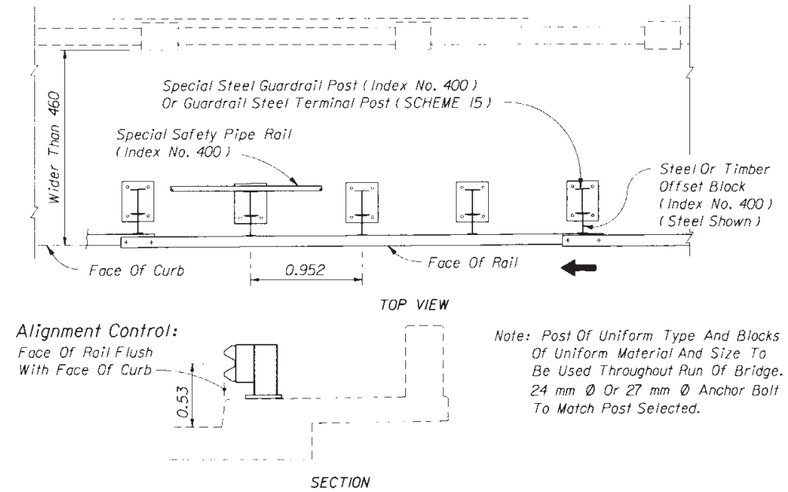

Note: Post Of Uniform Type And Blocks Of Uniform Material And Size To Be Used Throughout Run Of Bridge. 24 mm Ø Or 27 mm Ø Anchor Bolt To Match Post Selected.

APPLICATION
SAFETY CURB WIDER THAN 460 mm AND SIDEWALK

SCHEME 16

GUARDRAIL CONTINUOUS ACROSS BRIDGE

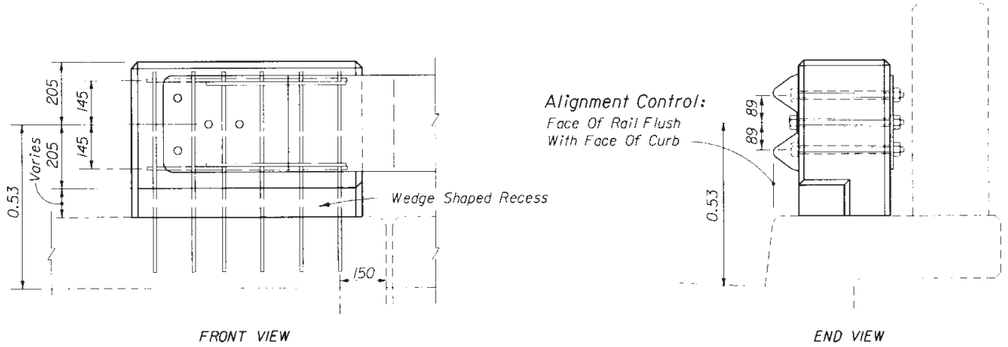

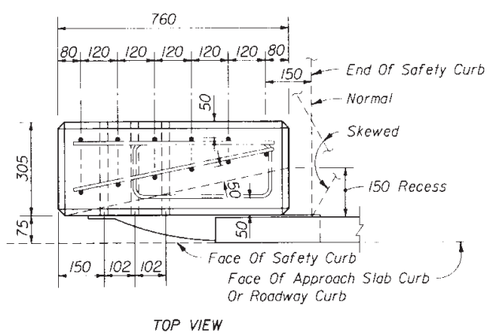

Reinforcing Steel:
All 15M Bars (10M Bars Permitted For Hoops).
Vertical Bars Shall Be Set In 18 mm Ø Holes With Epoxy Bonding Compound, Type "J" (QPL Class IV) In Accordance With The Manufacturer's Specifications.
Embed 150 mm.

Note: Scheme comparatively enlarged to facilitate reinforcement detailing.

APPLICATIONS
SAFETY CURB 460 mm TO 610 mm WIDE
APPROACH END OF ONE-WAY BRIDGES ONLY

SCHEME 17

CONCRETE ANCHOR POST

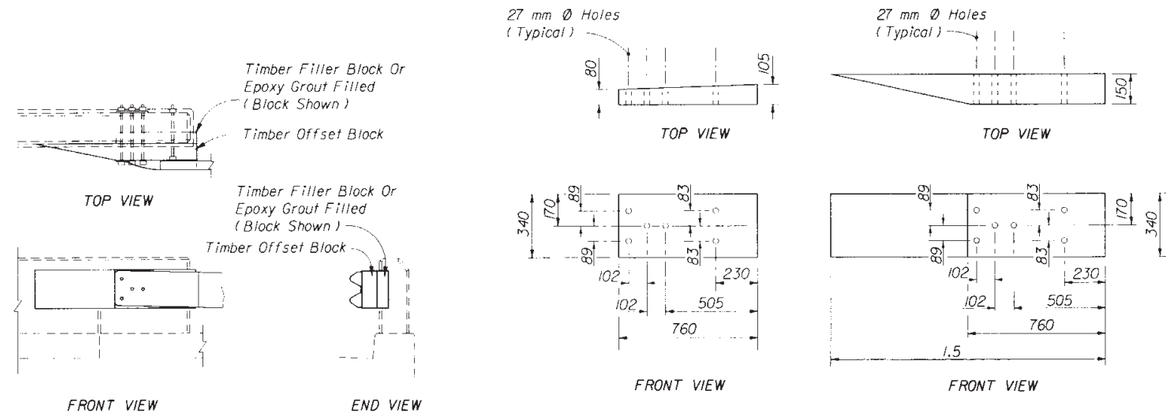

TIMBER FILLER BLOCK

TIMBER OFFSET BLOCK

APPLICATIONS
HANDRAIL CURB
SPECIAL END SHOE RECESS (EXISTING)
APPROACH AND TRAILING END OF TWO-WAY BRIDGES
APPROACH END OF ONE-WAY BRIDGES (NOTES: SPECIAL END SHOE TO REMAIN IN THE RECESS ON TRAILING END)

SCHEME 18

END POST WITH SPECIAL END SHOE RECESS

BRIDGES WITH APPROACHING ROADWAY CURB

STATE OF FLORIDA DEPARTMENT OF TRANSPORTATION
ROAD DESIGN

GUARDRAIL ANCHORAGE AND CONTINUOUS BARRIER FOR EXISTING BRIDGES

	Names	Dates	Approved By
Designed By	JVG	09/86	Freddie Simmons, State Roadway Design Engineer
Drawn By	HSD	09/86	
Checked By	JVG	09/86	

F.H.W.A. Approved:	Revision No.	Sheet No.	Index No.
	94	6 of 9	401

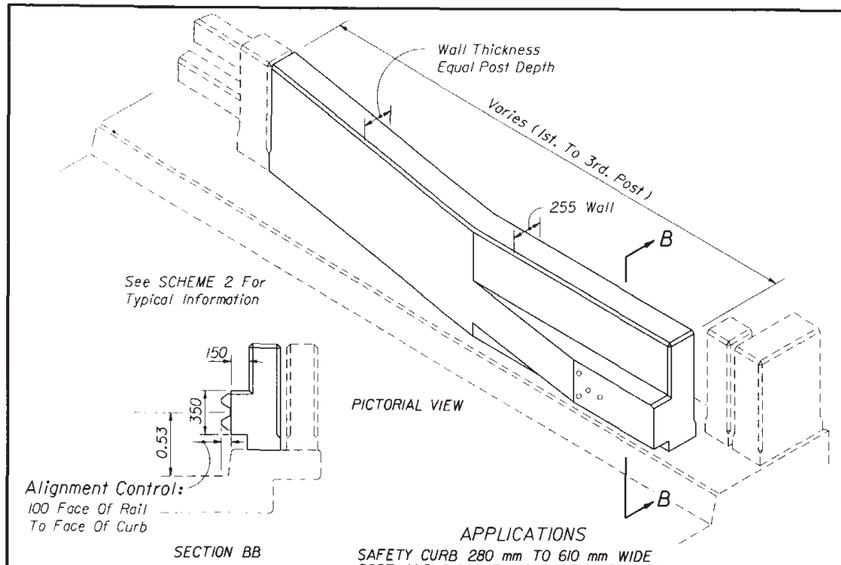

APPLICATIONS
SAFETY CURB 280 mm TO 610 mm WIDE
POST AND DISCONTINUOUS BEAM RAILING
APPROACH ENDS OF ONE-WAY BRIDGE
APPROACH AND TRAILING ENDS OF TWO-WAY BRIDGES

SCHEME 20

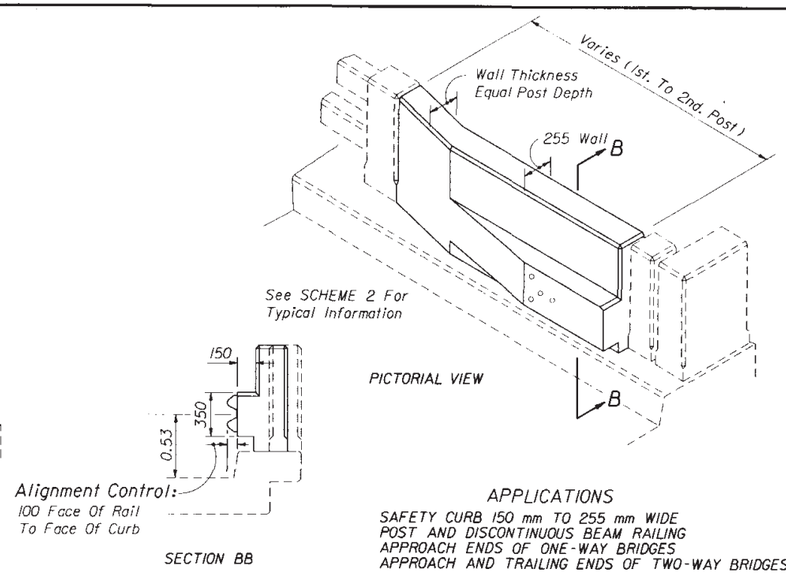

APPLICATIONS
SAFETY CURB 150 mm TO 255 mm WIDE
POST AND DISCONTINUOUS BEAM RAILING
APPROACH ENDS OF ONE-WAY BRIDGES
APPROACH AND TRAILING ENDS OF TWO-WAY BRIDGES

SCHEME 21

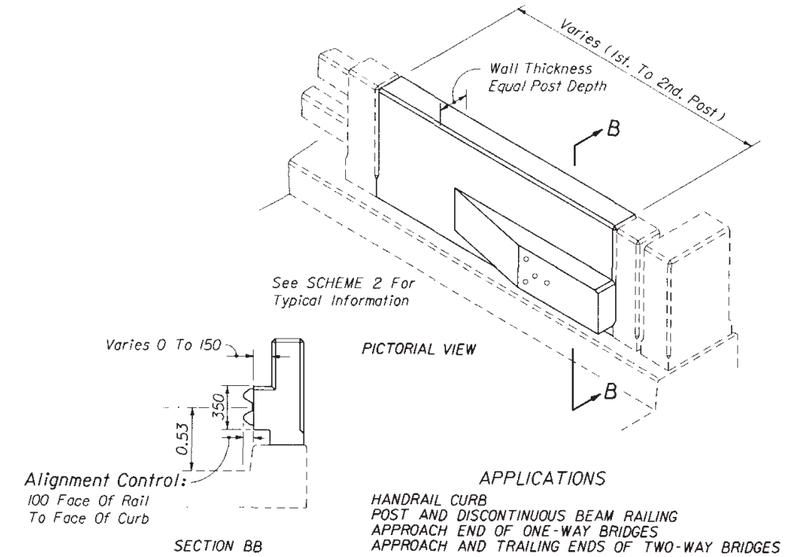

APPLICATIONS
HANDRAIL CURB
POST AND DISCONTINUOUS BEAM RAILING
APPROACH END OF ONE-WAY BRIDGES
APPROACH AND TRAILING ENDS OF TWO-WAY BRIDGES

SCHEME 22

CAST IN PLACE PANELS

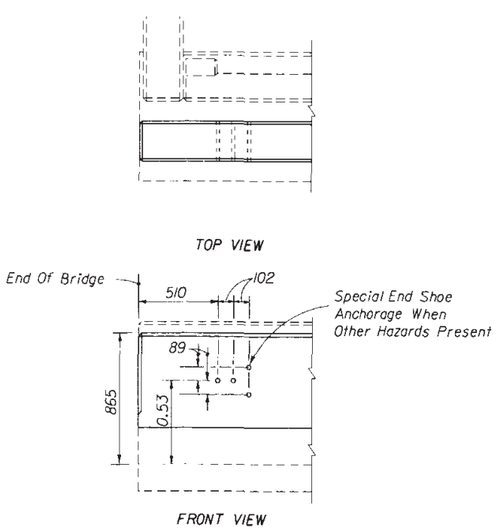

TRAILING END OF ONE-WAY BRIDGES

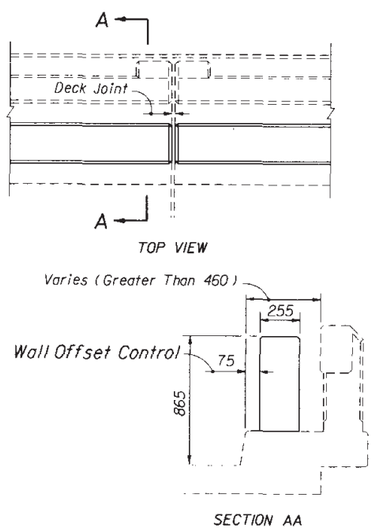

RUN OF BARRIER

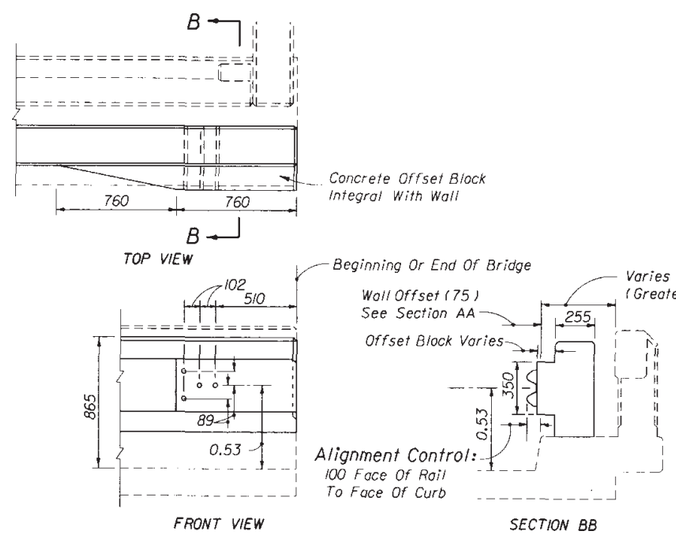

APPROACH END OF ONE-WAY BRIDGES
APPROACH AND TRAILING ENDS OF TWO-WAY BRIDGES

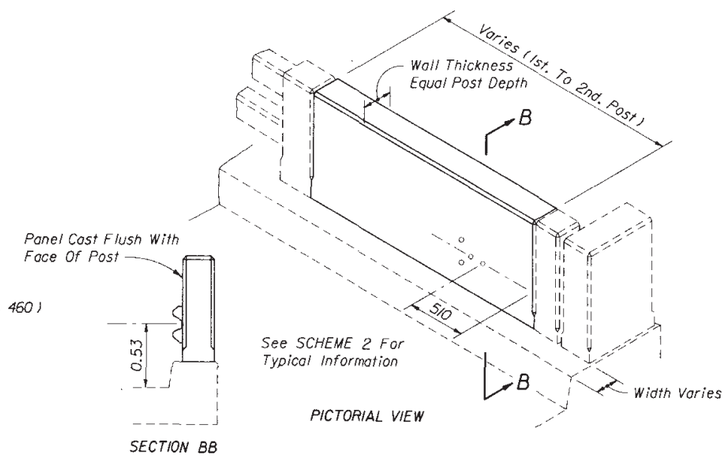

APPLICATION
TRAILING END ON ONE-WAY BRIDGES WHEN OTHER HAZARDS PRESENT

SCHEME 23

CAST IN PLACE CONCRETE PANEL

See SCHEME 1 For Reinforcing Details And Estimated Quantities

APPLICATIONS
SAFETY CURB WIDER THAN 460 mm, AND
SIDEWALKS CONTINUOUS BARRIER ACROSS BRIDGE

SCHEME 19

CONCRETE SAFETY BARRIER

BRIDGE WITHOUT APPROACHING ROADWAY CURB

STATE OF FLORIDA DEPARTMENT OF TRANSPORTATION
ROAD DESIGN

GUARDRAIL ANCHORAGE AND CONTINUOUS BARRIER FOR EXISTING BRIDGES

	Names	Dates	Approved By Freddie Simmons, State Roadway Design Engineer
Designed By	JVG	09/86	
Drawn By	HSD	09/86	
Checked By	JVG	09/86	
F.H.W.A. Approved:			Revision No. 94 · Sheet No. 7 of 9 · Index No. 401

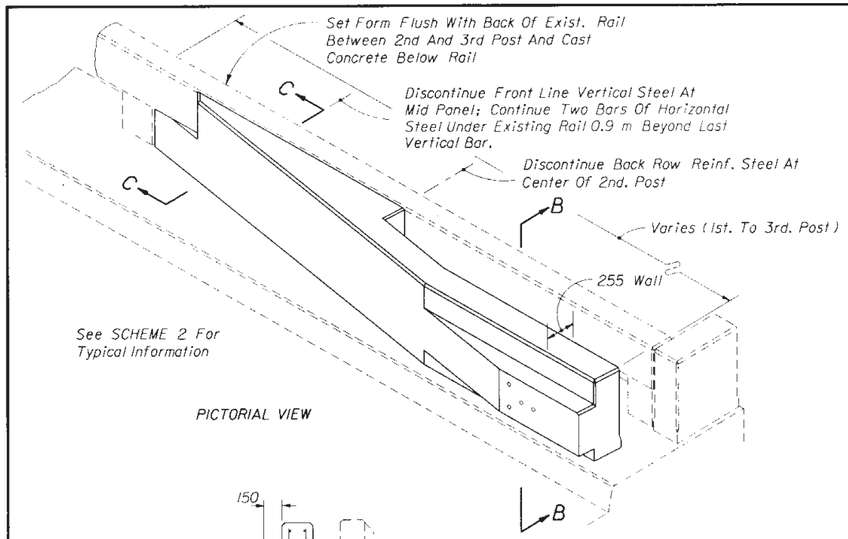

PICTORIAL VIEW

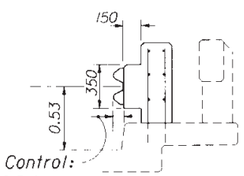

Alignment Control:
100 Face Of Rail
To Face Of Curb

SECTION BB
(610 mm Shown)

APPLICATIONS
SAFETY CURBS 510 mm TO 610 mm WIDE
CONCRETE CONTINUOUS BEAM RAILING
APPROACH AND TRAILING ENDS OF TWO-WAY BRIDGES

SCHEME 24

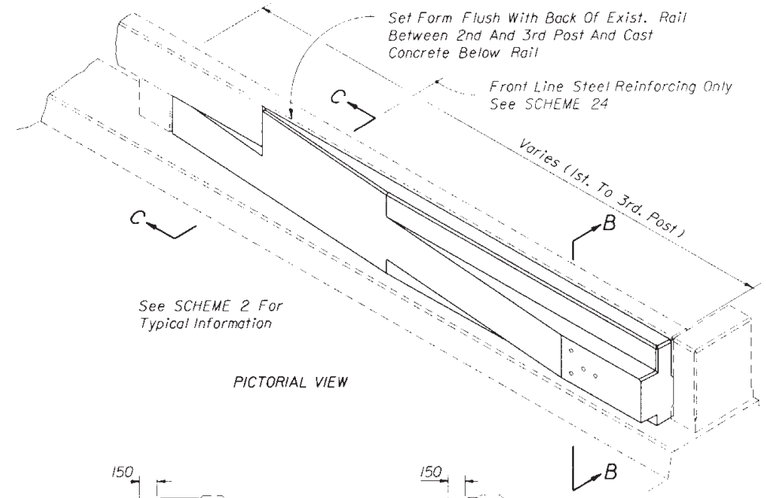

PICTORIAL VIEW

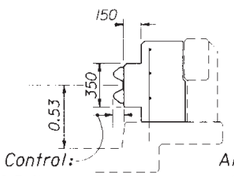

Alignment Control:
100 Face Of Rail
To Face Of Curb

SECTION BB
Curbs 355 mm To 485 mm
(485 mm Shown)

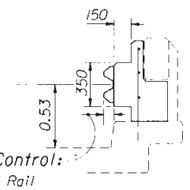

Alignment Control:
100 Face Of Rail
To Face Of Curb

SECTION BB
Curbs 230 mm To 330 mm
(230 mm Shown)

APPLICATIONS
SAFETY CURBS 230 mm TO 485 mm WIDE
CONCRETE CONTINUOUS BEAM RAILING
APPROACH AND TRAILING ENDS OF TWO-WAY BRIDGES

SCHEME 25

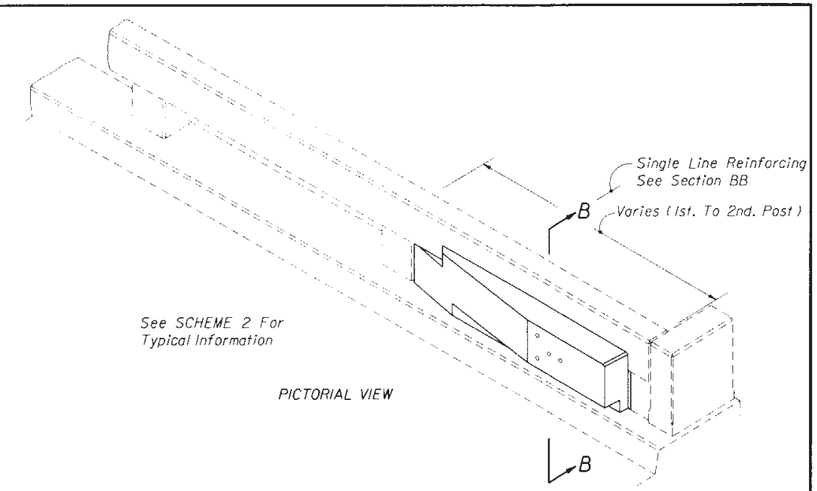

PICTORIAL VIEW

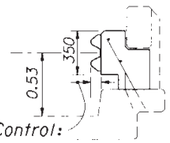

Alignment Control:
100 Face Of Rail
To Face Of Curb

SECTION BB
(205 mm Shown)

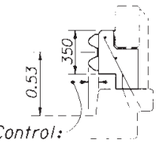

Alignment Control:
100 Face Of Rail
To Face Of Curb

SECTION BB
(125 mm Shown)

APPLICATIONS
SAFETY CURBS 125 mm TO 205 mm WIDE
CONCRETE CONTINUOUS BEAM RAILING
APPROACH AND TRAILING ENDS OF TWO-WAY BRIDGES

SCHEME 26

CAST IN PLACE PANELS

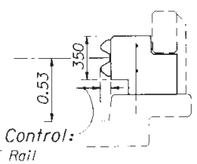

Alignment Control:
100 Face Of Rail
To Face Of Curb

SECTION BB

CURBS 230 mm TO 380 mm WIDE
(330 mm SHOWN)
APPROACH ENDS

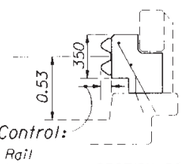

Alignment Control:
100 Face Of Rail
To Face Of Curb

SECTION BB

CURBS 125 mm TO 205 mm WIDE
(205 mm SHOWN)
APPROACH ENDS

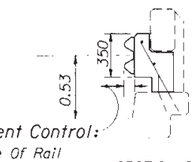

Alignment Control:
100 Face Of Rail
To Face Of Curb

SECTION BB

CURBS 125 mm TO 205 mm WIDE
(125 mm SHOWN)
APPROACH ENDS

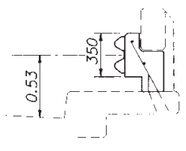

SECTION BB

CURB WIDTHS VARY
TRAILING END WHEN OTHER HAZARDS PRESENT

Note: For Approach End Curb Less Than 125 mm Wide See SCHEME 22.

Note: For Trailing End Curb Less Than 125 mm Wide See SCHEME 23

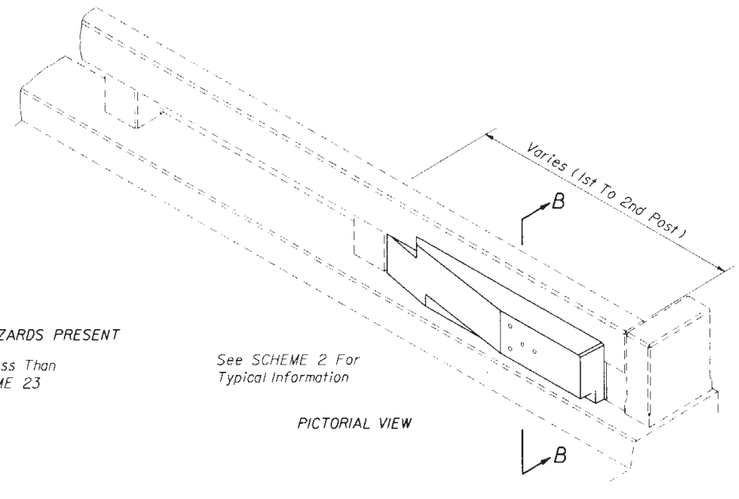

PICTORIAL VIEW

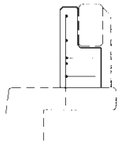

SECTION CC (SCHEMES 24 & 25)

APPLICATIONS
SAFETY CURB 125 mm TO 380 mm WIDE
CONCRETE CONTINUOUS BEAM RAILING
APPROACH END OF ONE-WAY BRIDGES
TRAILING END OF ONE-WAY BRIDGES WHEN OTHER HAZARDS PRESENT

SCHEME 27

CAST IN PLACE PANELS

BRIDGES WITHOUT APPROACHING ROADWAY CURB

STATE OF FLORIDA DEPARTMENT OF TRANSPORTATION
ROAD DESIGN

GUARDRAIL ANCHORAGE AND CONTINUOUS BARRIER FOR EXISTING BRIDGES

	Names	Dates
Designed By	JVG	09/86
Drawn By	HSD	09/86
Checked By	JVG	09/86

Approved By Freddie Simmons
State Roadway Design Engineer

Revision No.	Sheet No.	Index No.
94	8 of 9	401

F.H.W.A. Approved:

Reinforcing Steel: See SCHEME 17.

Note: Scheme comparatively enlarged to facilitate reinforcement detailing.

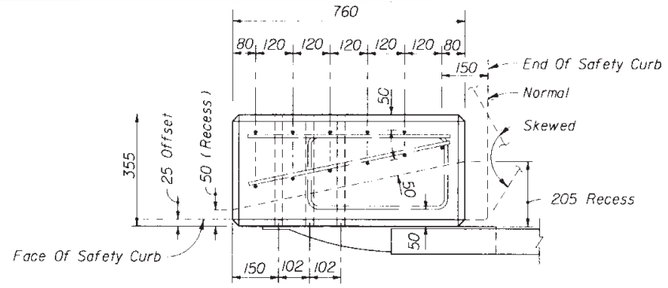

TOP VIEW

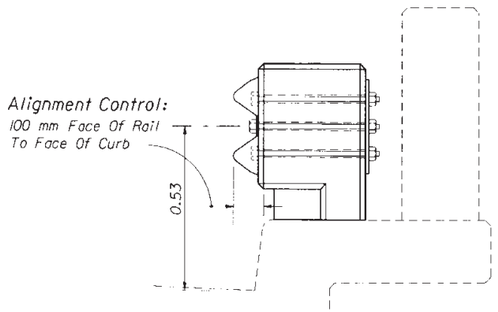

END VIEW

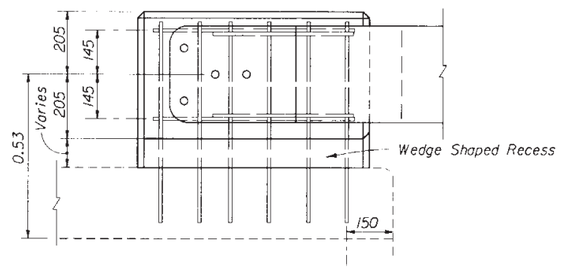

FRONT VIEW

APPLICATIONS

SAFETY CURB WIDER THAN 405 mm AND UP TO 610 mm
APPROACH END OF ONE-WAY BRIDGES ONLY

SCHEME 28

CONCRETE ANCHOR POST

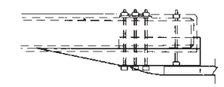

TOP VIEW

See SCHEME 18 For Complete Detailing

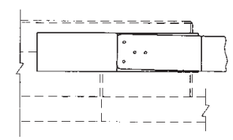

FRONT VIEW

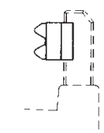

END VIEW

APPLICATIONS

HANDRAIL CURB
SPECIAL END SHOE RECESS (EXISTING)
APPROACH AND TRAILING END OF TWO-WAY BRIDGES
APPROACH END OF ONE-WAY BRIDGES (NOTE: SPECIAL END SHOE TO REMAIN IN THE RECESS ON TRAILING END)

SCHEME 30

END POST WITH SPECIAL END SHOE RECESS

Note (Scheme 29):

Portions of existing approach slab curbing, wingwalls, shoulder gutter, flumes and etc. may have to be revamped or removed.

Transition walls shall be reinforced in accordance with the 'Free End Reinforcement' detail of Index No. 410 with the hairpin bars spaced as shown in this pictorial. Walls mounted on existing approach slabs shall be anchored into the slabs with the front line of the hairpin reinforcement embedded 150 mm in the slab using 18 mm holes with epoxy bonding compound, Type "J" (QPL Class IV) in accordance with the manufacturer's specifications.

Transition walls mounted on soil foundation shall have footings deepened 760 mm and the walls doweled into the end of the existing bridge in the following manner:
Four 32 mm diameter holes 150 mm deep shall be drilled in the end post of the existing bridge and 20M bars 380 mm long set in epoxy mortar. The holes shall be located as near as practical to the vertical center of the end of the transition wall and equally spaced to provide cover of 75 mm minimum. The ends of the dowels extending into the transition wall shall be wrapped with one layer of Type I asphalt-saturated roofing felt (560 g/m²) (Commonly Called No. 15) with the ends crimped.

Approaching guardrail shall have approach post spacings, offset blocks and double W-beams in accordance with Details H, I, S & T, Index No. 400.

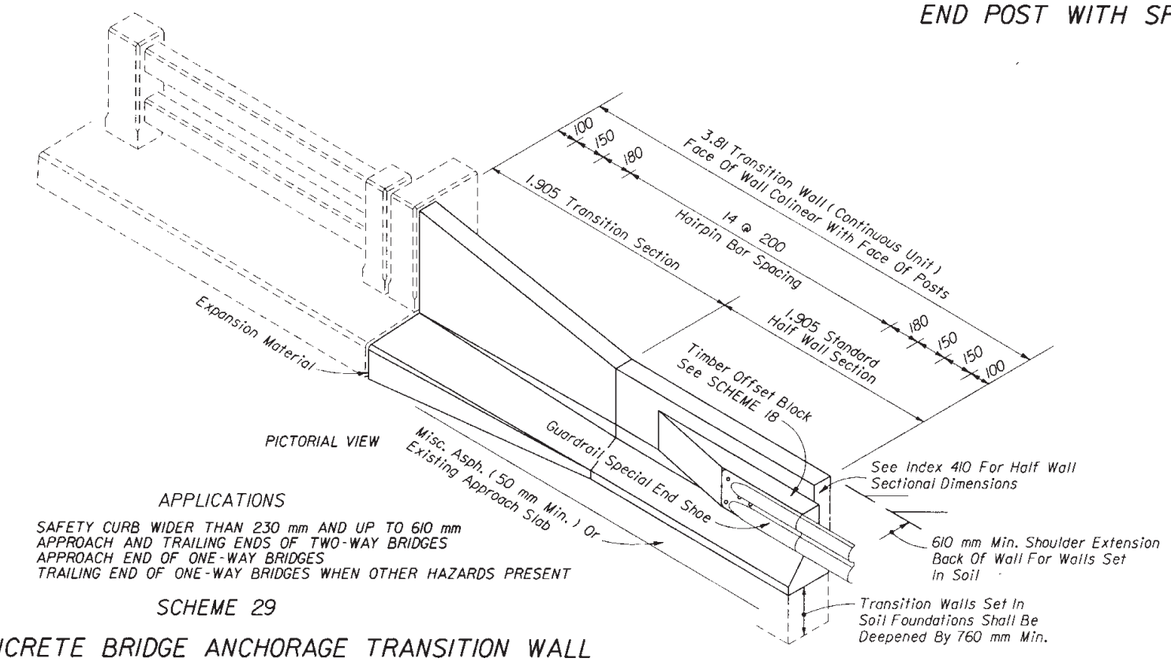

PICTORIAL VIEW

APPLICATIONS

SAFETY CURB WIDER THAN 230 mm AND UP TO 610 mm
APPROACH AND TRAILING ENDS OF TWO-WAY BRIDGES
APPROACH END OF ONE-WAY BRIDGES
TRAILING END OF ONE-WAY BRIDGES WHEN OTHER HAZARDS PRESENT

SCHEME 29

CONCRETE BRIDGE ANCHORAGE TRANSITION WALL

BRIDGES WITHOUT APPROACHING ROADWAY CURB

STATE OF FLORIDA DEPARTMENT OF TRANSPORTATION
ROAD DESIGN

GUARDRAIL ANCHORAGE AND CONTINUOUS BARRIER FOR EXISTING BRIDGES

	Names	Dates
Designed By	JVG	09/86
Drawn By	HSD	09/86
Checked By	JVG	09/86

Approved By Freddie Simmons
State Roadway Design Engineer

Revision No.	Sheet No.	Index No.
94	9 of 9	401

F.H.W.A. Approved:

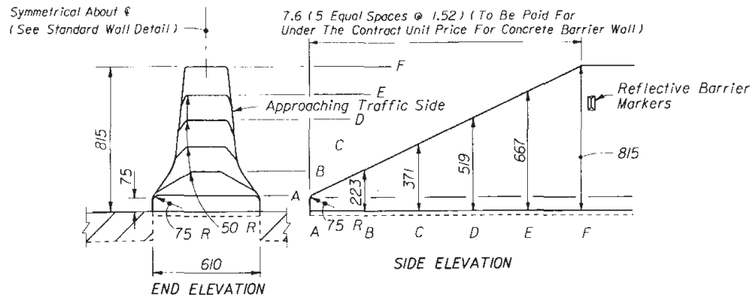

TO BE USED ONLY WHERE TERMINAL LOCATED CLEAR ZONE WIDTH FROM EDGE OF THE NEAR APPROACH DRIVING LANE. (SEE DETAIL A)

CONCRETE BARRIER WALL TERMINAL

DETAIL II

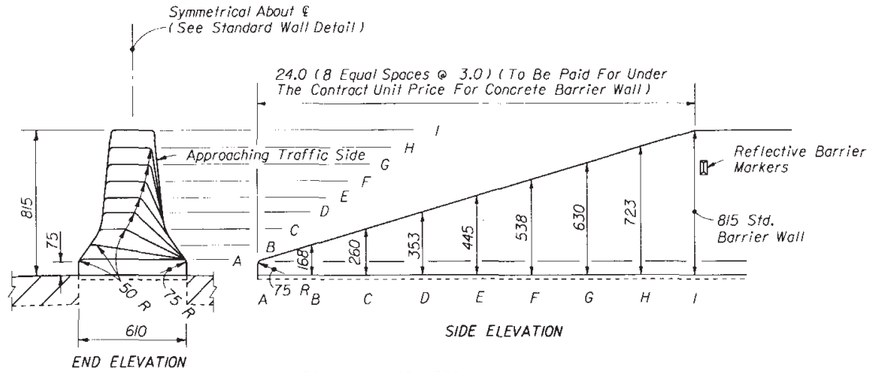

DESIGN SPEED 80 km/h OR LESS

CONCRETE BARRIER WALL TERMINAL FOR NARROW MEDIAN

DETAIL III

REFLECTIVE BARRIER MARKER SPACING ON WALL		
Distance - Edge of Travel Lane to Barrier Wall. (m)	Spacing (m)	REMARKS 1. Reflectors shall conform to Section 993-5 of the Standard Specifications. 2. Reflector color (white or yellow) shall conform to the color of the near edgeline.
0.3 to < 1.2	12.0	
1.2 to 2.4	24.0	
> than 2.4	none required	

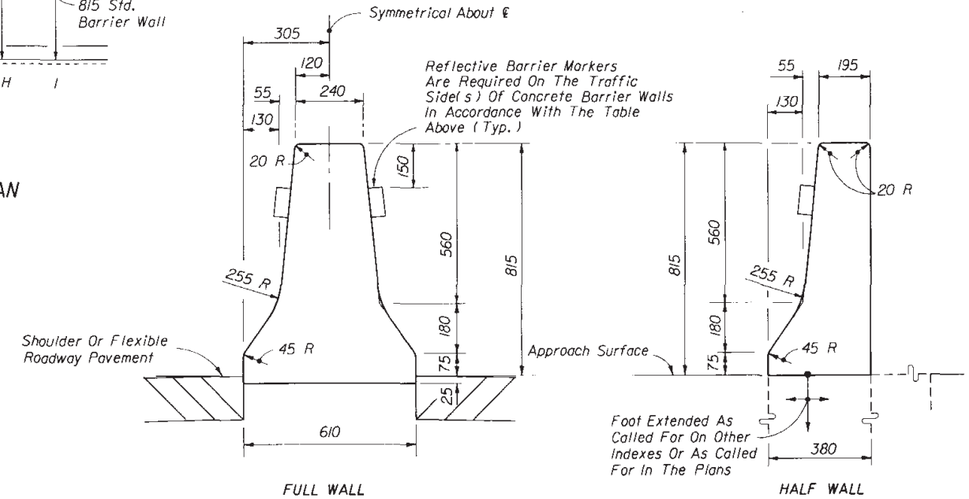

For concrete median barrier wall details at piers, highway lighting and guardrail connections, see Sheets 2, 3, 12 and 13.

Standard barrier to be paid for under the contract unit price for Barrier Wall Concrete, MI.

STANDARD BARRIER WALL SECTIONS

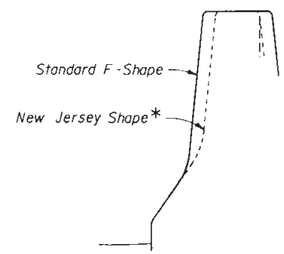

*Existing New Jersey shaped walls that are to remain in place or be modified as called for in the plans; or, walls that are to be repaired, modified or constructed as directed by the Engineer. Wall dimensions shall be in accordance with Index No. 410 of the 1988 Roadway and Traffic Design Standards.

Where standard F-Shape walls abut existing NJ Shape walls, face transitions of not less than 1.5 m in length shall be constructed at the end of the F-Shape wall.

WALL FACE SAFETY SHAPES

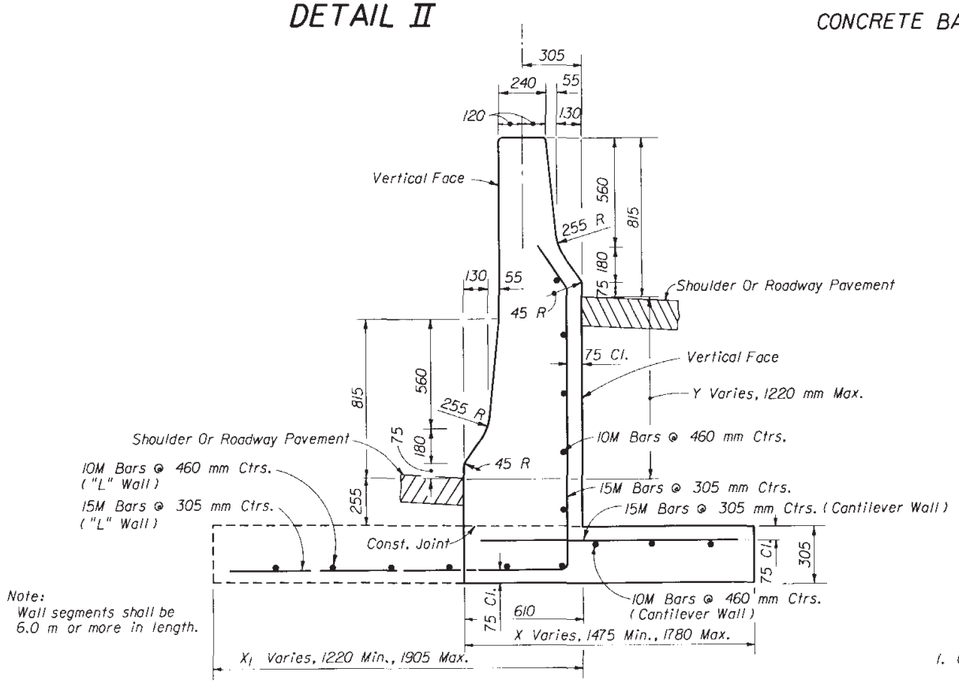

Note:
Wall segments shall be 6.0 m or more in length.

Design Criteria:
Vehicle: 1815 kg, 100 km/h, 25°, Avg. Lat. Impact Deceleration Force - 7G's (124.55 kN)
Vehicle Force Applications: 4448 N Vert. At Top of Toe; 124.55 kN Horiz. At 140 mm Above Pavt.

Unless the plans stipulate a specific wall type, either the cantilever wall or the "L" wall may be constructed at the Contractors options.

Steel not required in walls of heights Y=0 To 150 mm when footing and stem cast as one unit. When footing and stem cast separately by construction joint, the footing joint surface shall be roughened and 15M dowels 610 mm long installed at the centerline of the stem on 610 mm centers with 230 mm embedment in the footing.

Cost of the steel and concrete footing to be included in the contract unit price for Barrier Wall Concrete, MI.

See General Note No. 7 for details of connection and reinforcement required when wall is continuous with standard barrier wall.

	Height Y (mm)	0	150	305	460	610	760	915	1065	1220
Cantilever Wall	Width X (mm)	1475	1525	1575	1600	1650	1675	1700	1750	1780
"L" Wall	Width X_1 (mm)	1220	1320	1425	1525	1600	1675	1750	1830	1905

MEDIAN BARRIER WALL FOR SUPERELEVATED SECTIONS OR FOR VARIABLE ROADWAY PROFILE GRADES

GENERAL NOTES

1. Class II concrete shall be used for all reinforced and plain (nonreinforced) concrete barrier walls; except, in moderately and extremely aggressive environments, Class IV concrete shall be used.
   Exposed concrete surfaces shall have a Class 3 surface finish in accordance with Section 521 of the Standard Specifications, unless other finish called for in the plans. The surfaces shall have a Class 5 Applied Finish Coating in accordance with Section 400 only when called for in the plans.
2. Concrete barrier wall terminal notes for design speeds greater than 80 km/h.
   a. Terminated in a wide median section outside recovery area of the appproach traffic - See Detail A.
   b. Terminated within a shielded location.
   c. Terminal protection by the use of an impact attenuator system.
   d. Terminated in conjunction with a suitably designed transition to another type median barrier that can be introduced more safely.
3. Expansion joints in wall required only at bridge ends and/or at locations where wall is an integral part of existing or proposed concrete slab; wall joints are to match an existing or proposed expansion joint.
4. When the barrier is installed adjacent to the pavement the top 305 mm of the subgrade shall be compacted to at least 100% of the density as defined in the AASHTO T-99 specifications.
5. Cast-in-place barrier wall normally will be a continuous pour without transverse contraction joints. Cast-in-place segments with a length < 12 m shall be joined to adjacent sections by doweling. See Detail B.
6. Precast construction is allowed as an alternate to cast-in-place construction.
   a. Wall segments < 12 m in length shall be joined by a transverse joint in accordance with Details C & D. The minimum segment length is 6 m.
   b. Bedding of the precast sections shall be facilitated by the use of sand-cement grout or equal method to assure uniform bearing.
   c. Reinforcement may be required for handling stresses.

GENERAL NOTES (CONT.)

7. Concrete barrier walls that are continuous over roadway and bridge shall be pin connected at the roadway end of the approach slab. Both cast-in-place and precast roadway barrier walls shall be connected at the approach slab by Option 3 or 4 end treatments of Index No. 415, and reinforced in accordance with the free end reinforcement details of this index. Median and outside barrier walls on the approach slab shall be designed, constructed and paid for as a part of the approach slab. Pins shall remain free but secured from ready removal by spot welding a 13 mm Ø x 50 mm stud approximately 75 mm below the upper pair of eye connectors.
   This connection method also applies to standard barrier walls that are continuous with median barrier walls for superelevated sections and for variable roadway profile grades (see detail left).
8. Cost of reinforcing steel and reflective barrier markers shall be included in the contract unit price for concrete barrier wall. See individual details for pay item information.
9. For barrier wall inlet details see Indexes Nos. 217, 218 and 219.

STATE OF FLORIDA DEPARTMENT OF TRANSPORTATION
ROAD DESIGN

CONCRETE BARRIER WALL

	Names	Dates
Designed By		
Drawn By	AF/HSD	7/3/91
Checked By	LMF/JG	7/3/91
F.H.W.A. Approved:		5/20/77

Approved By Freddie Simmons
State Roadway Design Engineer

Revision No.	Sheet No.	Index No.
94	1 of 15	410

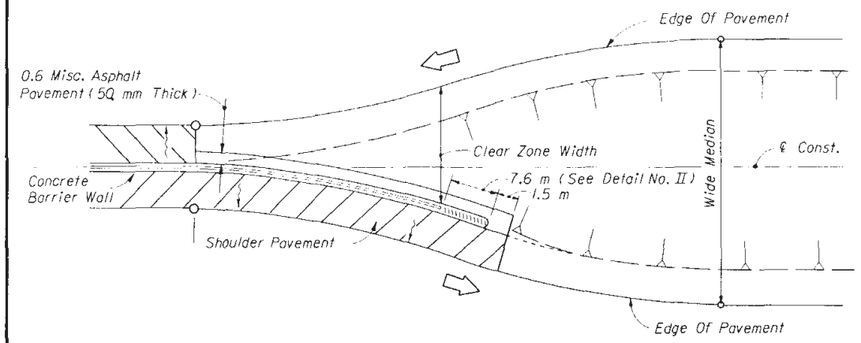

CONCRETE BARRIER WALL TRANSITION BETWEEN WIDE AND NARROW MEDIANS

DETAIL A

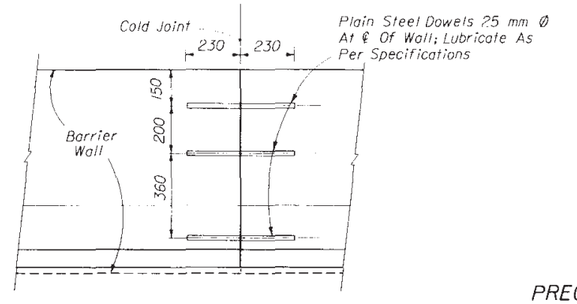

DOWELED TRANSVERSE CONSTRUCTION JOINT WHEN ABUTTING SEGMENT(S) LESS THAN 12 m IN LENGTH

DETAIL B

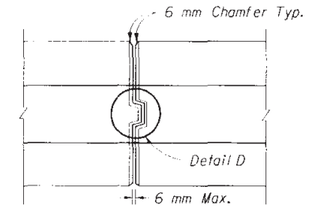

TOP VIEW

PRECAST BARRIER TRANSVERSE JOINTS

DETAIL C

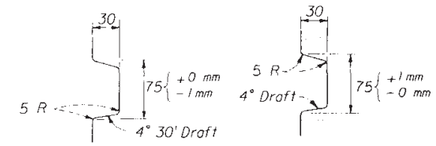

TOP VIEW

STRAIGHT TONGUE AND GROOVE

DETAIL D

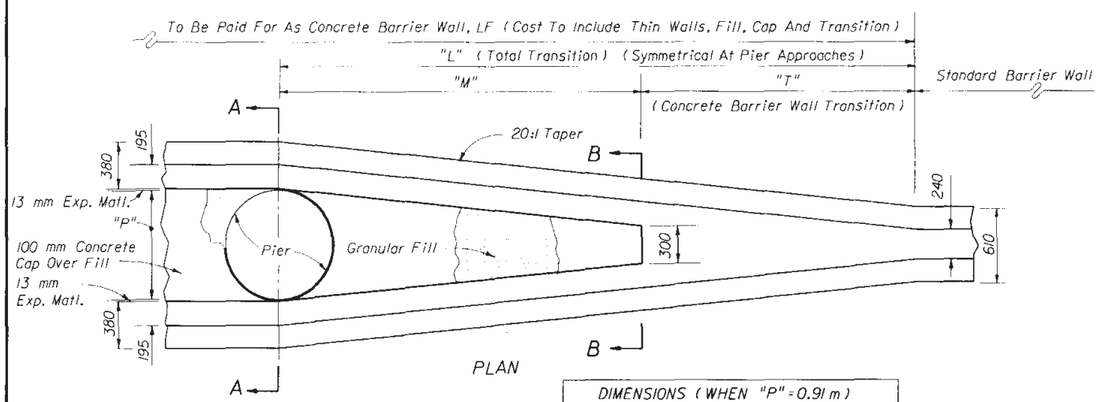

DIMENSIONS (WHEN "P" = 0.91 m)		
"L"	"M"	"T"
10.90	6.40	4.50

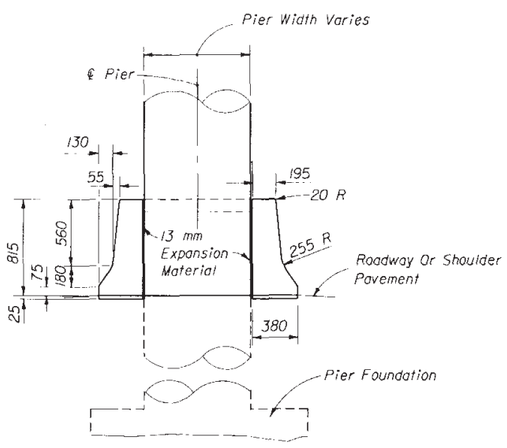

SECTION AA

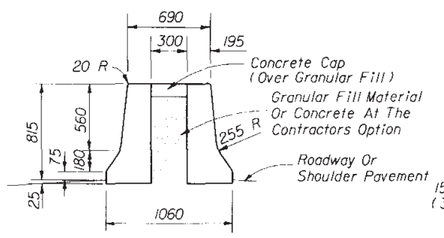

SECTION BB

CONCRETE MEDIAN BARRIER WALL (THIN WALLS, FILL, CAP AND TRANSITION)

DETAIL I

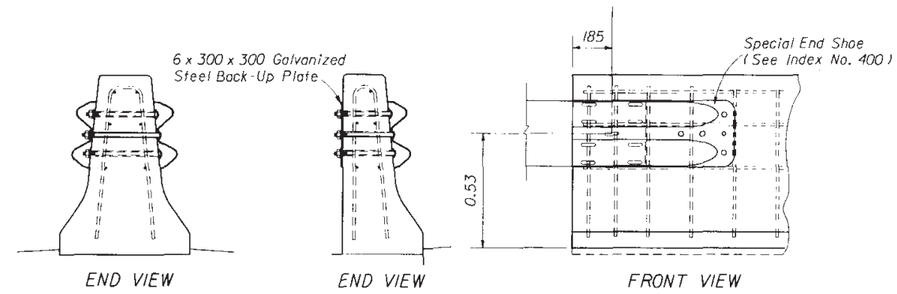

NOTES

1. End of wall flush mounted connections are not applicable to two-lane two-way facilities. See Sheets 12, 13 and 14 for trailing end connections on two-lane two-way facilities and for approach guardrail connections.

2. Trailing guardrail connections to double face safety shaped walls will be under one of the following traffic conditions and mounting methods:
   (a) One-way traffic trailing condition one side only – flush mount with flat steel back-up plate on back side.
   (b) One-way traffic trailing condition both sides – flush mount both sides.
   (c) For trailing condition one side and approach traffic condition opposite side – see "Median Barrier Wall" mounting, Sheets 13 and 14.

GUARDRAIL CONNECTION TO TRAILING END CONCRETE BARRIER WALL

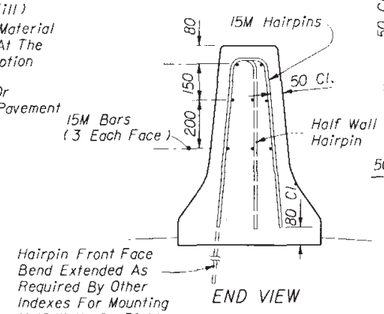

END VIEW

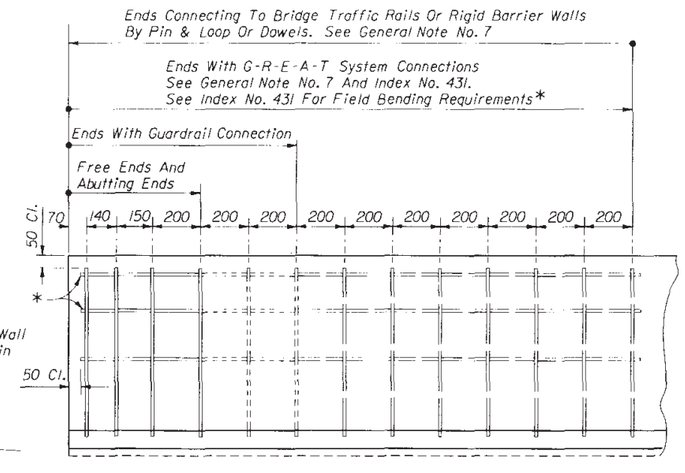

SIDE VIEW

Note: Free end reinforcement required for nonreinforced walls at all exposed ends; abutting ends of true joints; ends with guardrail connections; ends with G-R-E-A-T System connections; and, ends connecting to bridge traffic rails or other rigid barrier walls. See General Note No. 7 for free end reinforcement and connections to rigid structures.

FREE END REINFORCEMENT

STATE OF FLORIDA DEPARTMENT OF TRANSPORTATION
ROAD DESIGN

CONCRETE BARRIER WALL

	Names	Dates
Designed By		
Drawn By	AF/HSD	7.3/91
Checked By	LMF/JVG	7.3/91
F.H.W.A. Approved: 10/8/78		

Approved By Freddie Simmons
State Roadway Design Engineer

Revision No.	Sheet No.	Index No.
94	2 of 15	410

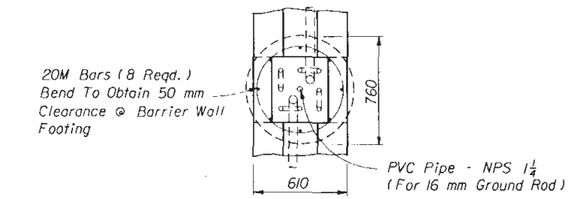

TOP VIEW

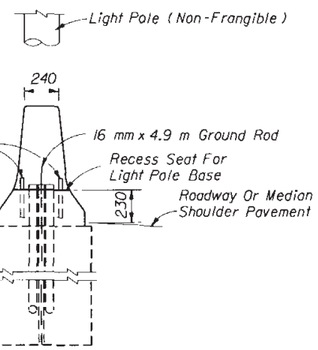

SECTION CC

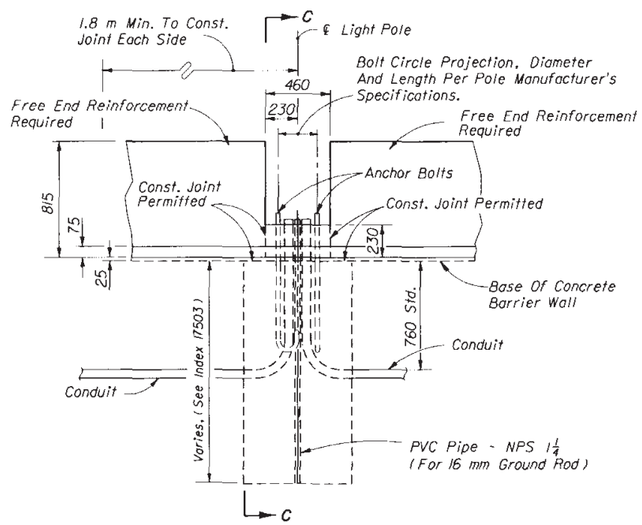

FRONT VIEW

Note: For foundation design and details see Index No. 17503.
Refer to Highway Lighting Plans for size of conduit.
Payment for the 760 mm concrete shaft including reinforcing steel, anchor bolts and accessories shall be included in the contract unit price for Light Pole Complete - Each.

LIGHT POLE MOUNTING IN MEDIAN BARRIER WALL

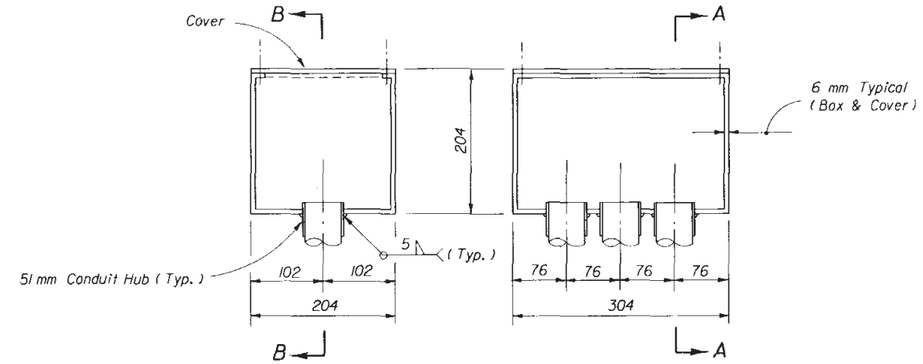

SECTION AA

SECTION BB

JUNCTION BOX

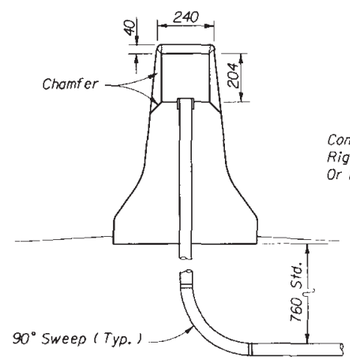

TRANSVERSE SECTION

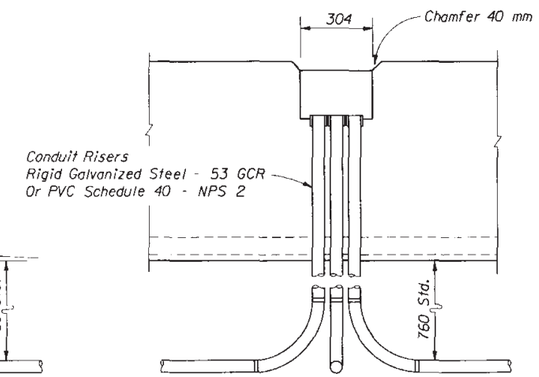

LONGITUDINAL SECTION

INSTALLATION

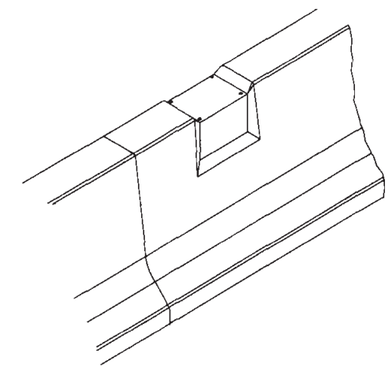

PICTORIAL

JUNCTION BOX NOTES

1. Junction boxes are to be fabricated from steel conforming to ASTM A36 and be hot dipped galvanized after fabrication. All seams shall be continuously welded and ground smooth. A neoprene gasket shall be attached to the box to provide a watertight cover. The cover screws shall be fully galvanized.
2. Remove excess concrete while green and hand form chamfers.
3. Junction box complete and conduit risers are incidental to the construction and cost of the barrier wall; there is to be no separate compensation for the box, risers or installation unless specifically called for in the plans.

JUNCTION BOX - ELECTRICAL

STATE OF FLORIDA DEPARTMENT OF TRANSPORTATION
ROAD DESIGN

CONCRETE BARRIER WALL

	Names	Dates	Approved By Freddie Simmons State Roadway Design Engineer
Designed By			
Drawn By	HSD	9/85	
Checked By	JVG	9/85	Revision No. 94 · Sheet No. 3 of 15 · Index No. 410
F.H.W.A. Approved:			

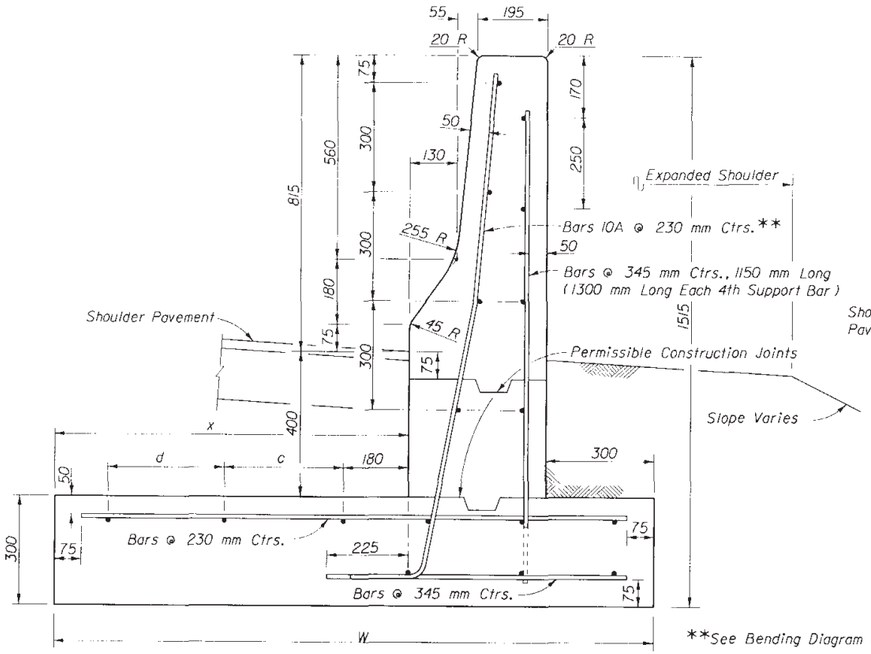

CANTILEVER WALL

**See Bending Diagram On Sheet 5.

All reinforcement 10M bars.

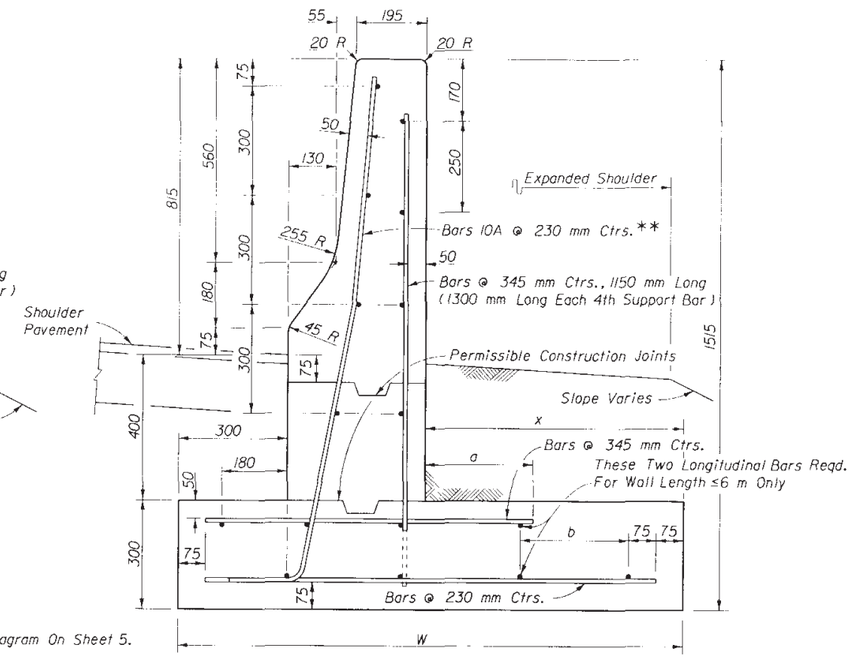

L-WALL

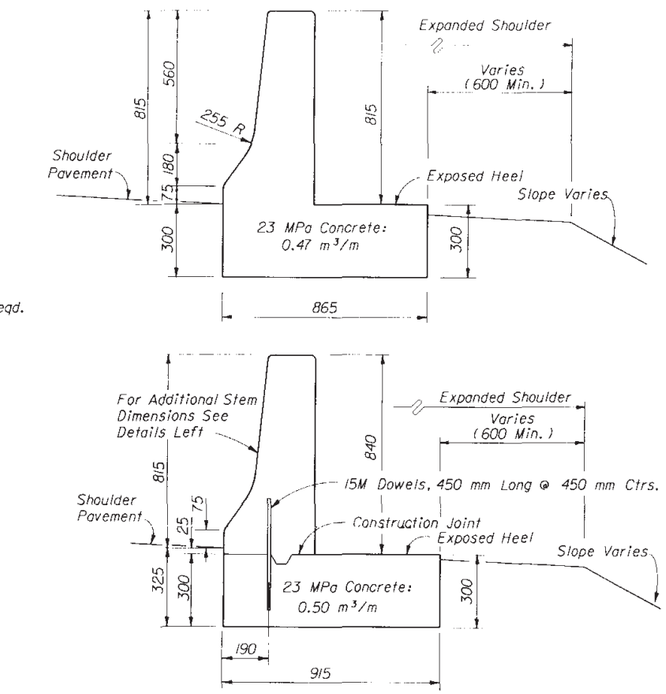

WALL OPTIONS

NOTE:
Wall to be paid for under the contract unit price for Barrier Wall, Concrete (Plain-Shoulder), MI.

DESIGN NOTE:
Wall shall have a length of 12 m or greater. Wall of 12 m or more in length may be made up of segments of 6 m or more in length provided the segments are joined by a transverse joint in accordance with Detail B, Sheet 2; segments shall have dimensions same as wall shown above.

PLAIN CONCRETE BARRIER WALL (SHOULDER)

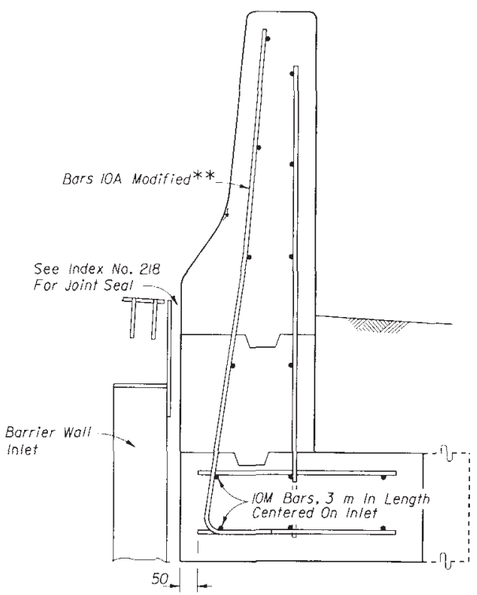

REINFORCING STEEL MODIFICATIONS
AT BARRIER WALL INLETS (INDEX NO. 218)

DIMENSIONS AND QUANTITIES

CANTILEVER WALL							L-WALL						
Length* Of Barrier Wall (m)	W (mm)	x (mm)	c (mm)	d (mm)	23 MPa Concrete m³/m	Reinforcing Steel kg/m	Length* Of Barrier Wall (m)	W (mm)	x (mm)	a (mm)	b (mm)	23 MPa Concrete m³/m	Reinforcing Steel kg/m
≥12	1000	320	NA	NA	0.66	25.41	≥12	1000	320	245	NA	0.66	25.57
11	1050	370	NA	NA	0.68	25.58	11	1050	370	295	NA	0.68	25.86
10	1100	420	NA	NA	0.69	25.75	10	1100	420	300	NA	0.69	26.04
9	1200	520	200	NA	0.72	26.88	9	1150	470	300	NA	0.71	26.21
8	1300	620	300	NA	0.75	27.22	8	1200	520	300	NA	0.72	26.38
7	1400	720	400	NA	0.78	27.56	7	1300	620	300	NA	0.75	26.72
6	1550	870	275	275	0.83	29.07	6	1400	720	300	320	0.78	28.63
5.5	1650	970	325	325	0.86	29.41	5.5	1450	770	330	340	0.80	36.61
5	1800	1120	400	400	0.90	29.92	5	1500	820	360	360	0.81	36.85
4.5	1950	1270	475	475	0.95	30.44	4.5	1600	920	410	410	0.84	37.31
4	2100	1420	550	550	0.99	38.95	4	1700	1020	460	460	0.87	37.76

Quantities shown are for information only. For method of payment see payment note below.

Barrier wall inlets (Index 218) shall be isolated from the barrier wall stem and footing by 25 mm expansion material.

*Any length less than 12 m must be a continuous (non-jointed) segment. Walls of 12 m or more in length may be made up of segments of 6 m or more in length provided the segments are joined by a transverse joint in accordance with Detail B, Sheet 2; segments shall have dimensions same as wall ≥12 m above.

PAYMENT:
Wall to be paid for under the contract unit price for Concrete Barrier Wall (Rigid-Shoulder), MI.

DESIGN NOTES:
Use of this barrier wall should be limited to special applications such as hazard encroachment into the clear zone where barrier wall deflection, rotation or translation cannot be tolerated; example hazards to consider are as follows:
(a) Structure supporting piers, bents and pylons (b) Pumping, metering, control or other similar critical stations (c) Quarries (d) Intolerable vertical drops (e) Historic structures or monuments (f) Rail transit travel way or passenger station (g) Other similar occupancies

REINFORCED CONCRETE BARRIER WALL (SHOULDER)

STATE OF FLORIDA DEPARTMENT OF TRANSPORTATION
ROAD DESIGN

CONCRETE BARRIER WALL

	Names	Dates
Designed By		
Drawn By	HSD	9/85
Checked By	JVG	9/85
F.H.W.A. Approved:		

Approved By Freddie Simmons
State Roadway Design Engineer

Revision No.	Sheet No.	Index No.
94	4 of 15	410

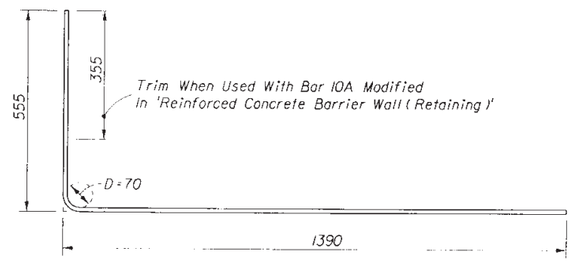

BAR 10B

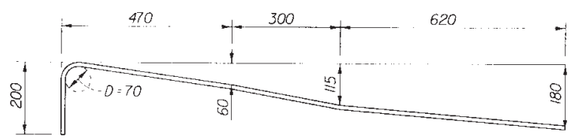

For Use In Areas Where Obstructions
Require Localized Omission Of Toe

BAR 10A MODIFIED

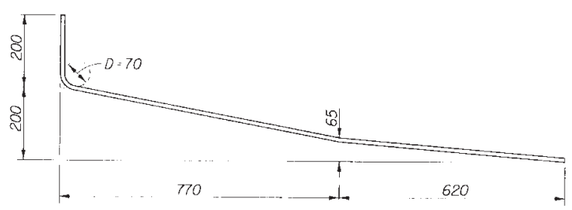

BAR 10A

BENDING DIAGRAMS

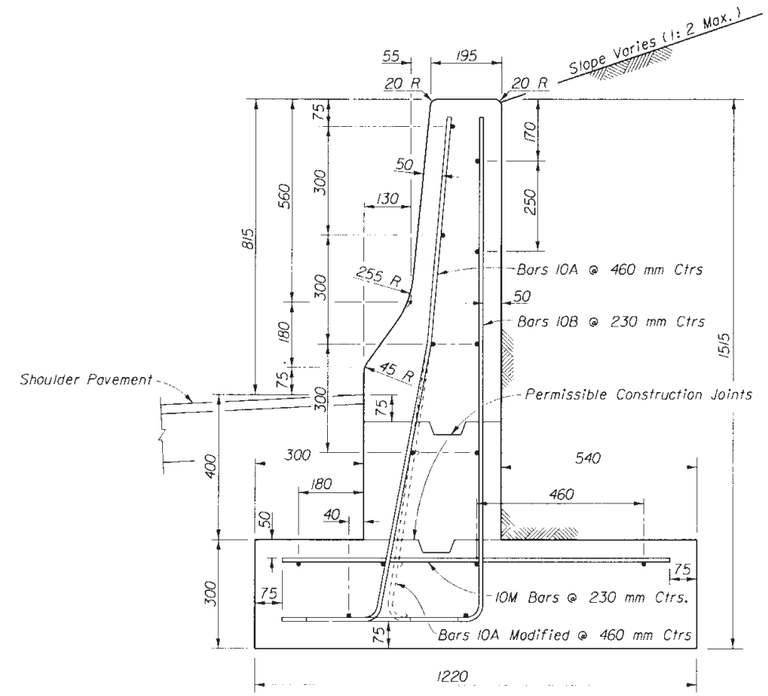

NOTE: All reinforcement 10M bars.
Minimum segment length for this wall is 6 m.
Wall to be paid for under the contract unit price
for Barrier Wall Concrete (Rigid-Retaining), MI.

QUANTITIES (For Estimating Purposes Only):
Class II Concrete 0.73 m^3/m
Reinforcing Steel 24 kg/m

REINFORCED CONCRETE BARRIER WALL (RETAINING)

STATE OF FLORIDA DEPARTMENT OF TRANSPORTATION
ROAD DESIGN

CONCRETE BARRIER WALL

	Names	Dates
Designed By		
Drawn By		
Checked By		

Approved By Freddie Simmons
State Roadway Design Engineer

Revision No.	Sheet No.	Index No.
94	5 of 15	410

F.H.W.A. Approved:

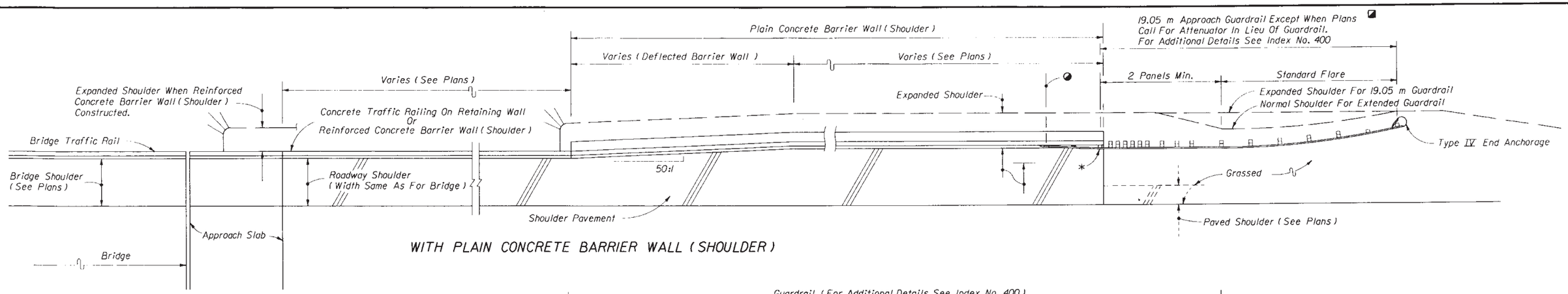

WITH PLAIN CONCRETE BARRIER WALL (SHOULDER)

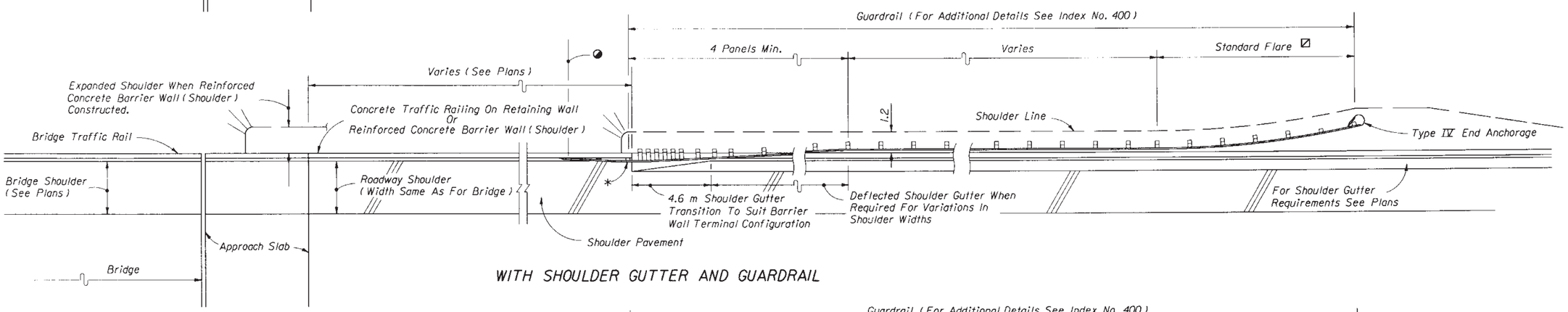

WITH SHOULDER GUTTER AND GUARDRAIL

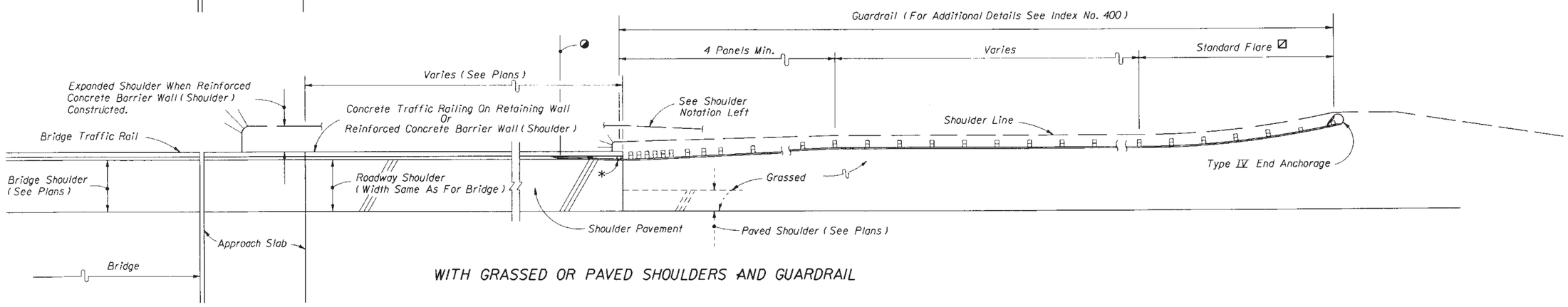

WITH GRASSED OR PAVED SHOULDERS AND GUARDRAIL

△ Views show approach roadside barriers when length of need exceeds the length of either retaining walls with concrete traffic railings* or Reinforced Concrete Barrier Wall (Shoulder) on shoulders. When either of these rigid barriers alone satisfies the approach length of need, the wall ends shall be shielded by crash cushions, or, by guardrail the same as for bridge traffic rails, as detailed in Index No. 400.

See other flagged notes for trailing end treatments.

Miscellaneous asphalt paving under guardrail not shown.

* Guardrail connection to concrete traffic railings on retaining walls shall be in accordance with the Structures Design Office Standard Drawings and the plans. Guardrail connections to shoulder concrete barrier walls shall be in accordance with the details shown on Sheets 2, 13 and 14. Back-up plates, Index No. 400, Detail J, required for all connections.

◐ End measurement for guardrail payment when guardrail connected to shoulder barrier walls. See Index No. 400, Detail J for end measurement when guardrail connected to concrete traffic rails constructed with approach slab or on retaining walls.

◪ To be deleted on trailing ends except for 2-lane 2-way facilities. The tangent guardrail shall be anchored by End Anchorage Type II, Index No. 400.

◪ To be deleted on trailing ends except for 2-lane 2-way facilities.

EITHER REINFORCED CONCRETE BARRIER WALL (SHOULDER) OR RETAINING WALL WITH CONCRETE TRAFFIC RAILING △

CONCRETE BARRIER WALLS ON APPROACHES TO BRIDGES

STATE OF FLORIDA DEPARTMENT OF TRANSPORTATION
ROAD DESIGN

CONCRETE BARRIER WALL

	Names	Dates
Designed By	KNM/JVG	8/89
Drawn By	HSD	8/89
Checked By	KNM/JVG	8/89
F.H.W.A. Approved:		

Approved By Freddie Simmons
State Roadway Design Engineer

Revision No.	Sheet No.	Index No.
94	6 of 15	410

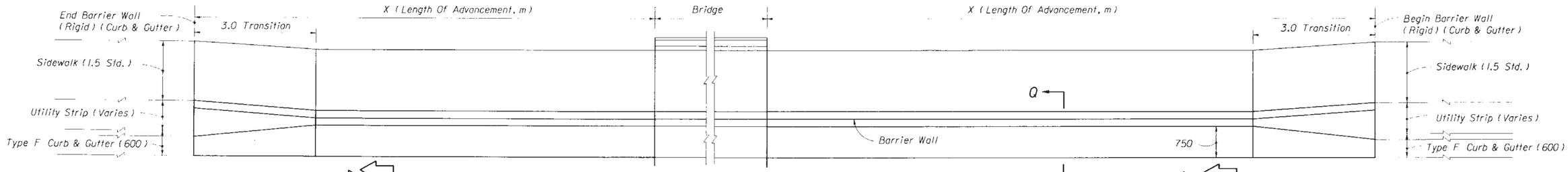

TWO-WAY TRAFFIC (UNDIVIDED)

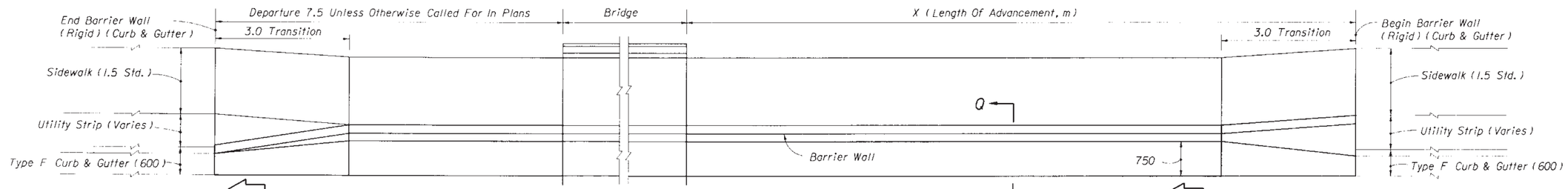

ONE-WAY TRAFFIC

BRIDGE END HAZARD

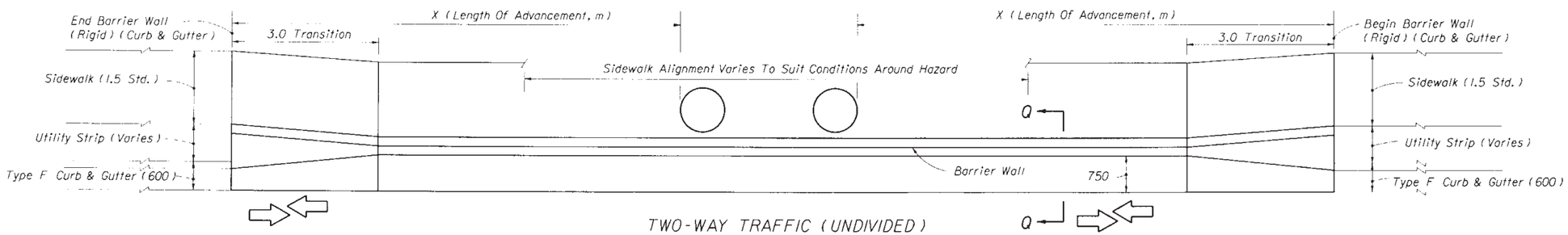

TWO-WAY TRAFFIC (UNDIVIDED)

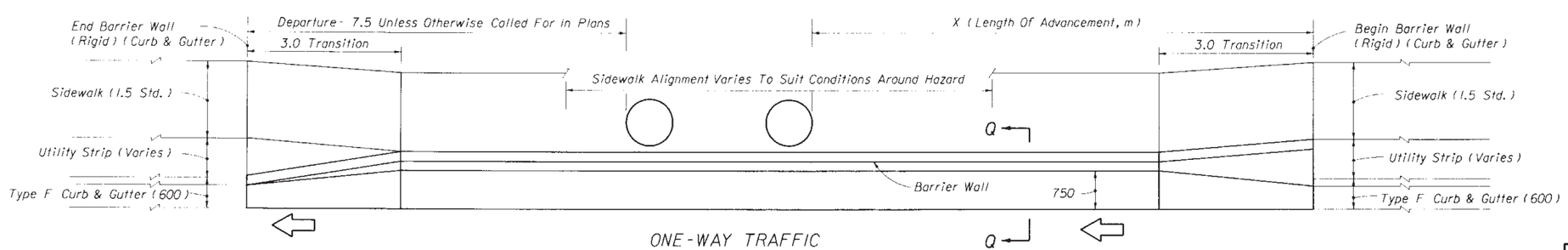

ONE-WAY TRAFFIC

HAZARD 1.2 m OR LESS FROM FACE OF CURB

NOTE:

X = Length of advancement in meters for near and opposing approach lanes. See Sheet 11.

For locations without utility strips see Sheet 8. For transition, sidewalk and sectional details see Sheets 9 & 10.

The 750 mm offsets to toe of barrier wall cannot be reduced to accommodate hazards; however, hazards located in the stem of the wall can be accommodated by the detail on Sheet 11.

CONCRETE BARRIER WALL (RIGID) (CURB & GUTTER) • CURB AND GUTTER WITH UTILITY STRIP

STATE OF FLORIDA DEPARTMENT OF TRANSPORTATION
ROAD DESIGN

CONCRETE BARRIER WALL

	Names	Dates
Designed By		
Drawn By	HSD	10/85
Checked By	JBW/JVG	10/85
F.H.W.A. Approved:		

Approved By Freddie Simmons
State Roadway Design Engineer

Revision No.	Sheet No.	Index No.
94	7 of 15	410

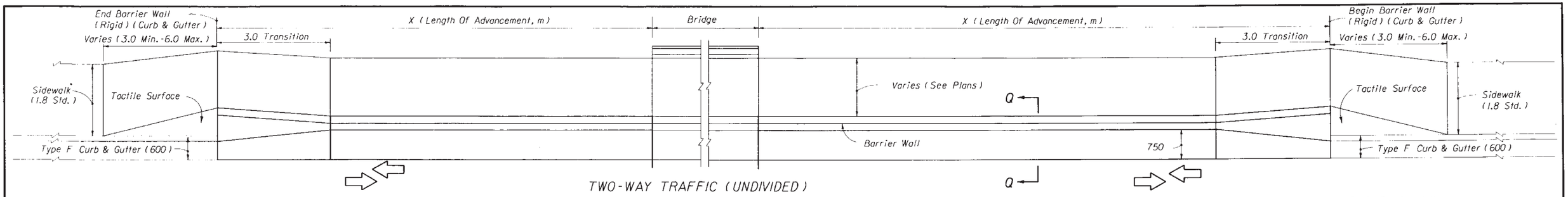

TWO-WAY TRAFFIC (UNDIVIDED)

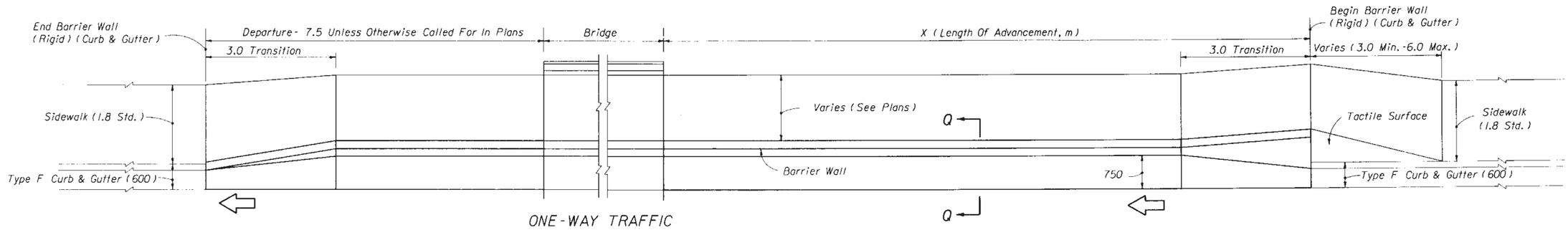

ONE-WAY TRAFFIC

BRIDGE END HAZARD

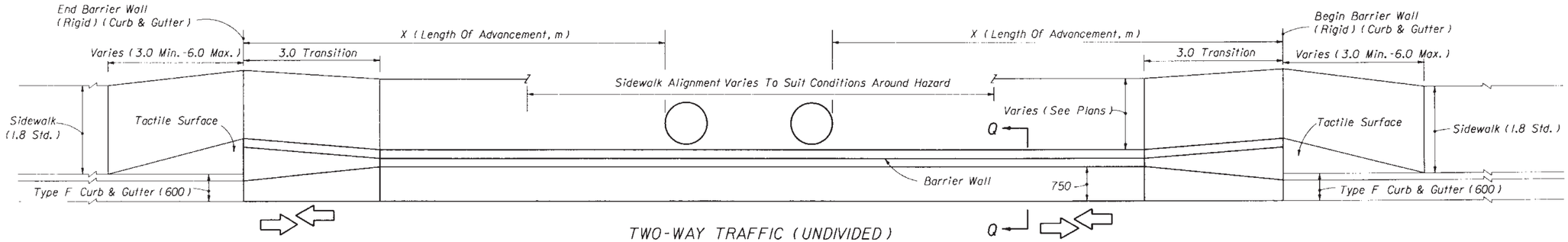

TWO-WAY TRAFFIC (UNDIVIDED)

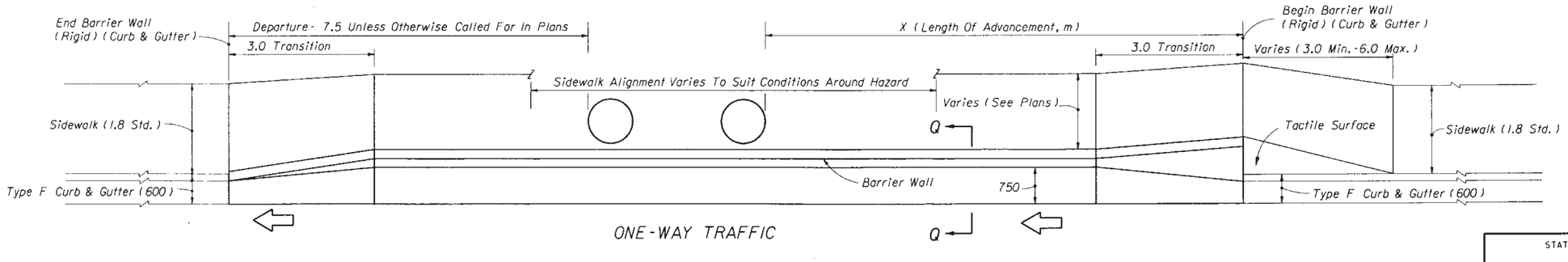

ONE-WAY TRAFFIC

HAZARD 1.2 m OR LESS FROM FACE OF CURB

NOTE:

X = Length of advancement in meters for near and opposing approach lanes. See Sheet 11.

For locations with utility strips see Sheet 7.

For transition, sidewalk and sectional details see Sheet 9 & 10.

The 750 mm offsets to toe of barrier wall cannot be reduced to accommodate hazards; however, hazards located in the stem of the wall can be accommodated by the detail on Sheet 11.

CONCRETE BARRIER WALL (RIGID) (CURB & GUTTER) • CURB AND GUTTER WITHOUT UTILITY STRIP

STATE OF FLORIDA DEPARTMENT OF TRANSPORTATION
ROAD DESIGN

CONCRETE BARRIER WALL

	Names	Dates
Designed By		
Drawn By	HSD	10/85
Checked By	JBW/JVG	10/85

Approved By Freddie Simmons
State Roadway Design Engineer

F.H.W.A. Approved:	Revision No.	Sheet No.	Index No.
	94	8 of 15	410

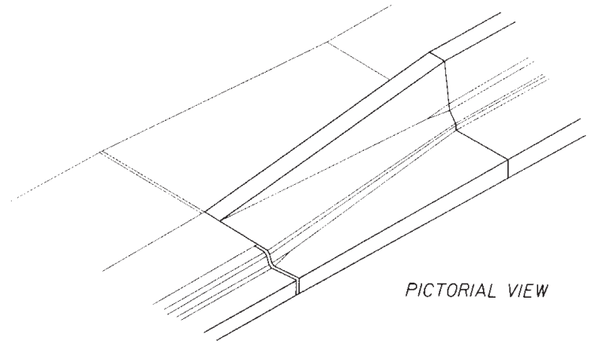

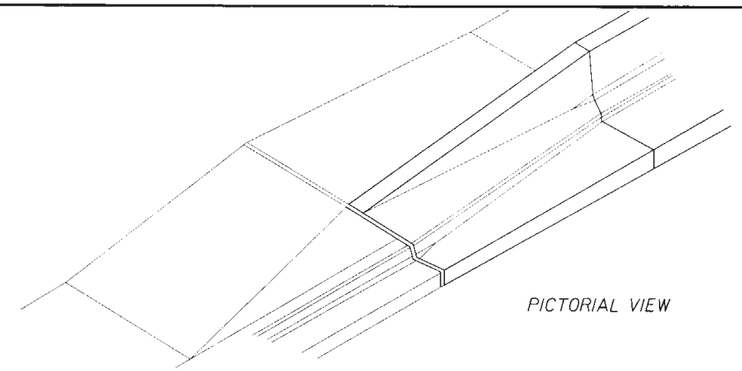

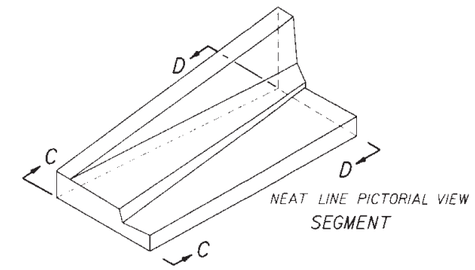

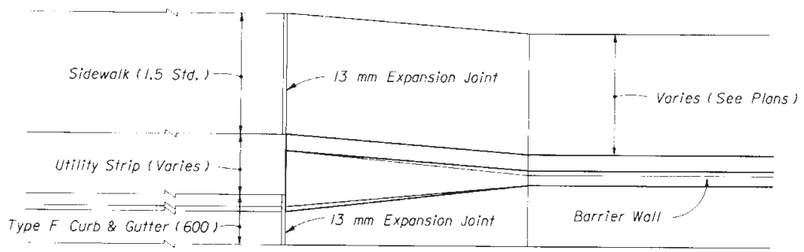

PLAN

WITH UTILITY STRIP

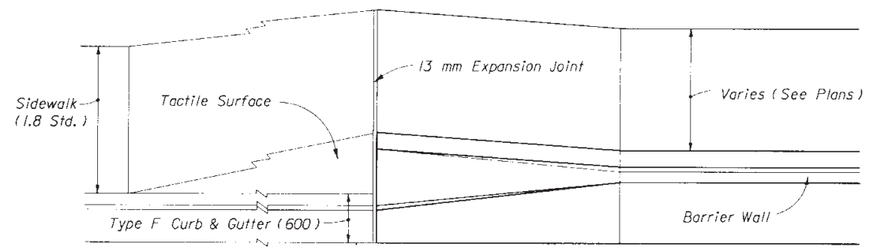

PLAN

WITHOUT UTILITY STRIP

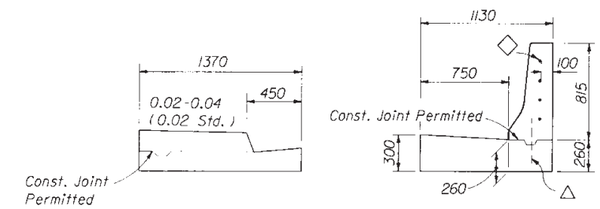

◇ See Sheet 10

△ See Sheet 10

TWO-WAY TRAFFIC (OPPOSING LANE APPROACH)

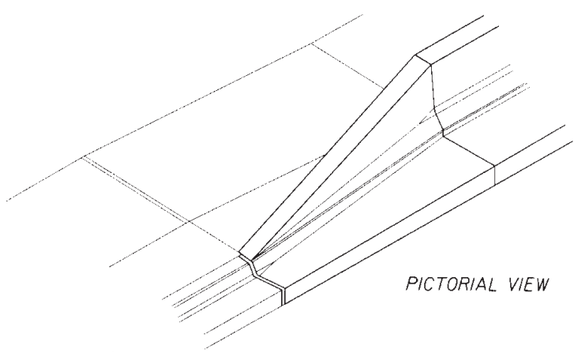

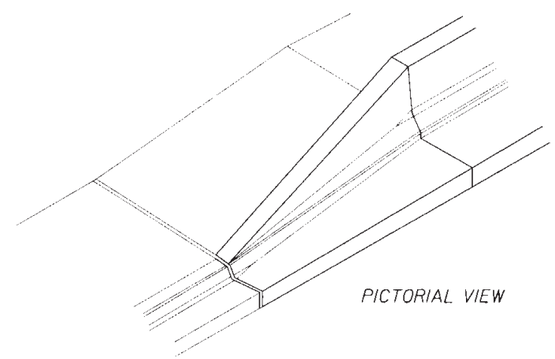

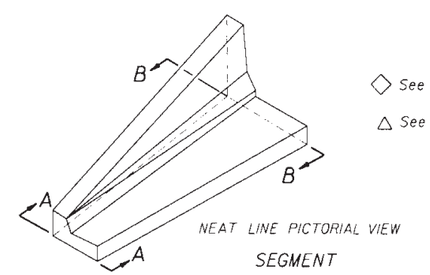

◇ See Sheet 10

△ See Sheet 10

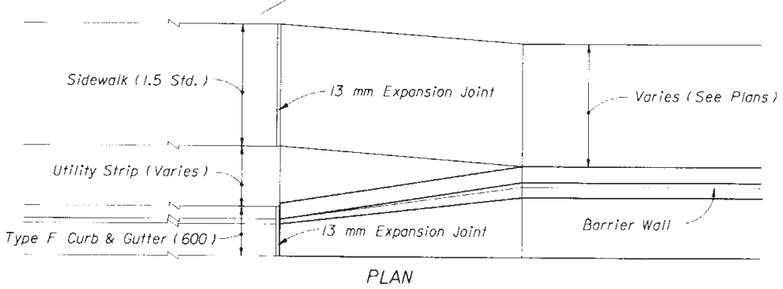

PLAN

WITH UTILITY STRIP

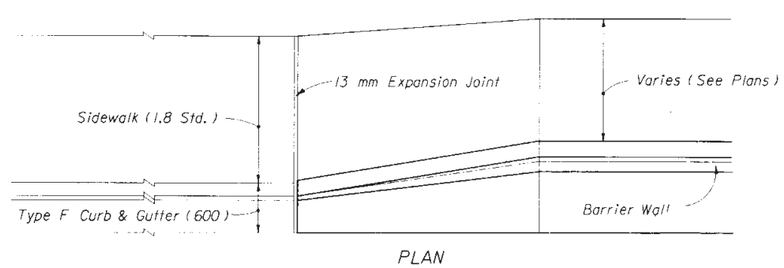

PLAN

WITH UTILITY STRIP

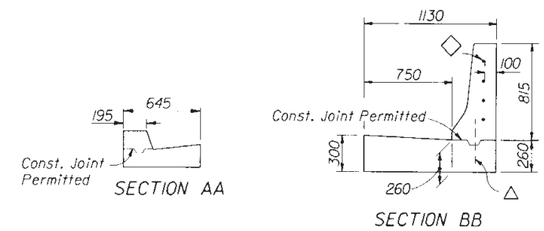

ONE-WAY TRAFFIC (TRAILING END)

CONCRETE BARRIER WALL (RIGID) (CURB & GUTTER) • TRANSITION SEGMENTS

STATE OF FLORIDA DEPARTMENT OF TRANSPORTATION
ROAD DESIGN

CONCRETE BARRIER WALL

	Names	Dates
Designed By		
Drawn By	HSD	10/85
Checked By	JBW/JVG	10/85
F.H.W.A. Approved:		

Approved By Freddie Simmons
State Roadway Design Engineer

Revision No.	Sheet No.	Index No.
94	9 of 15	410

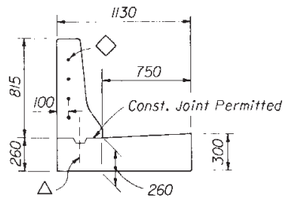

SECTION BB

◇ See Notes This Sheet

△ See Notes This Sheet

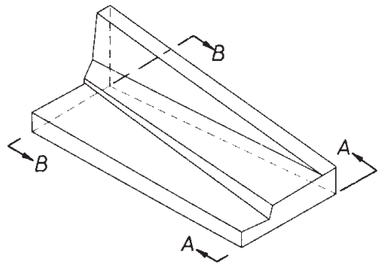

WITH OR WITHOUT UTILITY STRIP

NEAT LINE PICTORIAL VIEW

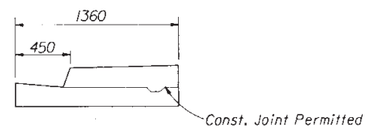

SECTION AA

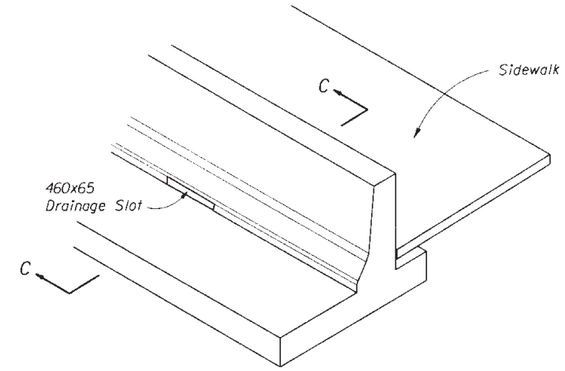

NEAT LINE PICTORIAL VIEW

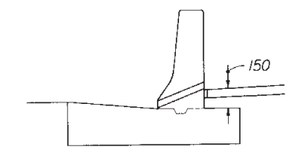

SECTION CC

Note: Drainage slots shall be located at all low points along the sidewalk, and, unless otherwise shown in the plans, slots shall be spaced at intervals not exceeding 15 m in fill sections and 6 m in cut sections. Slots shall be located such that only one bar is cut away or deleted in front and back lines of vertical reinforcement.

SIDEWALK DRAINAGE SLOT FOR BARRIER WALL (RIGID) (CURB & GUTTER)

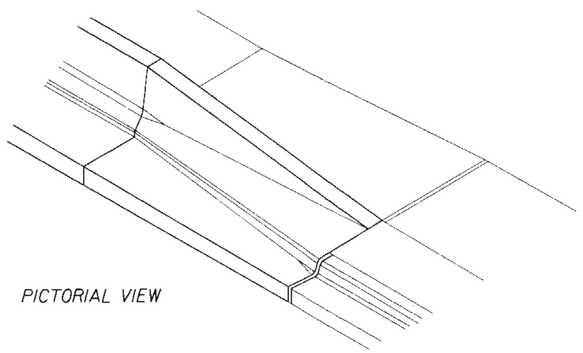

PICTORIAL VIEW

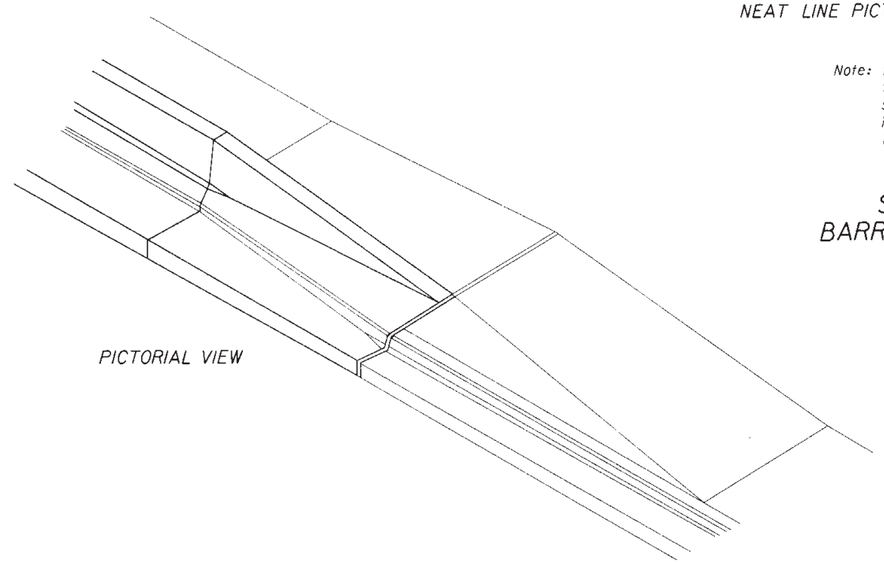

PICTORIAL VIEW

NOTE:

◇ Transition Segments Shall Be Doweled Into The End Of The Barrier Wall In The Following Manner:
Four 32 mm diameter holes 150 mm deep on 150 mm centers shall be drilled in the end of the barrier and 20M bars 380 mm long set in epoxy mortar. The ends of the dowels extending into the transition segment shall be wrapped with one layer of Type I asphalt-saturated roofing felt (560 g/m²) (commonally called No. 15) with the ends crimped.

△ When Construction Joints Are Utilized For Transition Segment Construction The Stem Shall Be Doweled To The Footing In The Following Manner:
Five 15M bars 380 mm long shall be embedded 180 mm into the footing. The dowels shall be spaced 380 mm on centers with the first dowel located 300 mm from the barrier wall. Dowels may be placed within or adjacent to the keyway.

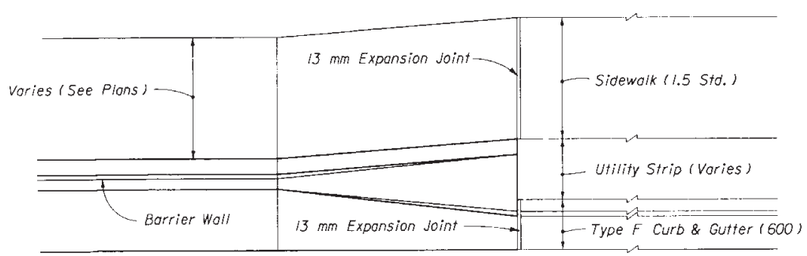

PLAN

WITH UTILITY STRIP

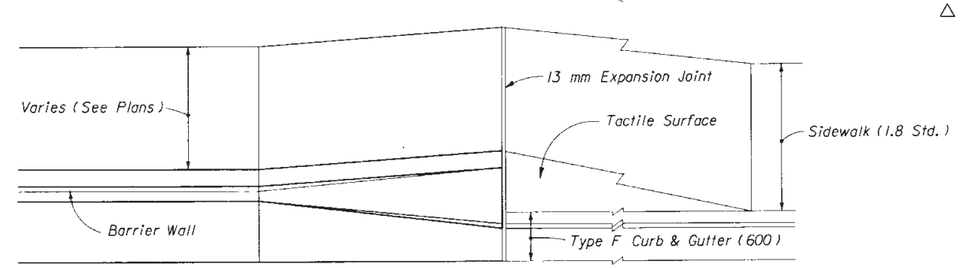

PLAN

WITHOUT UTILITY STRIP

RIGHT SIDE SHOWN, LEFT SIDE OPPOSITE HAND

ONE-WAY AND TWO-WAY TRAFFIC (NEAR LANE APPROACH)

CONCRETE BARRIER WALL (RIGID) (CURB & GUTTER) • TRANSITION SEGMENT

STATE OF FLORIDA DEPARTMENT OF TRANSPORTATION
ROAD DESIGN

CONCRETE BARRIER WALL

	Names	Dates	Approved By Freddie Simmons State Roadway Design Engineer		
Designed By					
Drawn By	HSD	10/85			
Checked By	JBW/JVG	10/85	Revision No.	Sheet No.	Index No.
F.H.W.A. Approved:			94	10 of 15	410

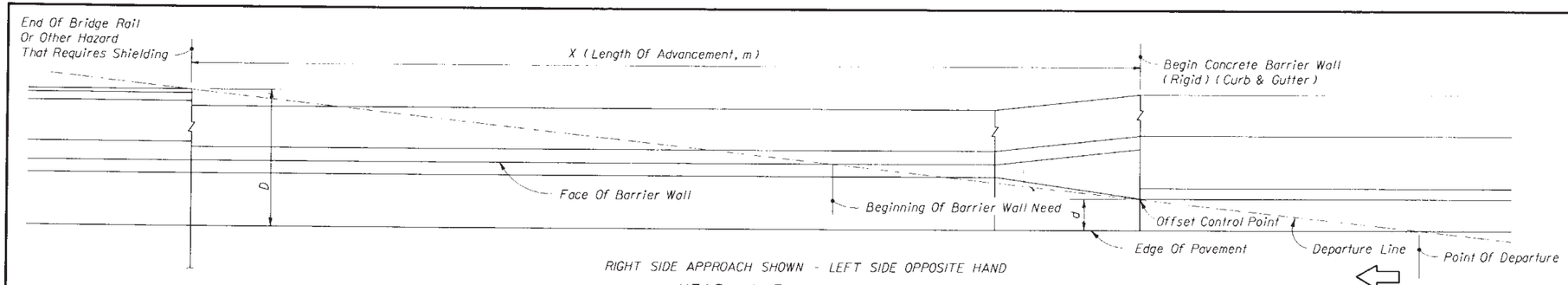

RIGHT SIDE APPROACH SHOWN - LEFT SIDE OPPOSITE HAND

NEAR LANE APPROACH

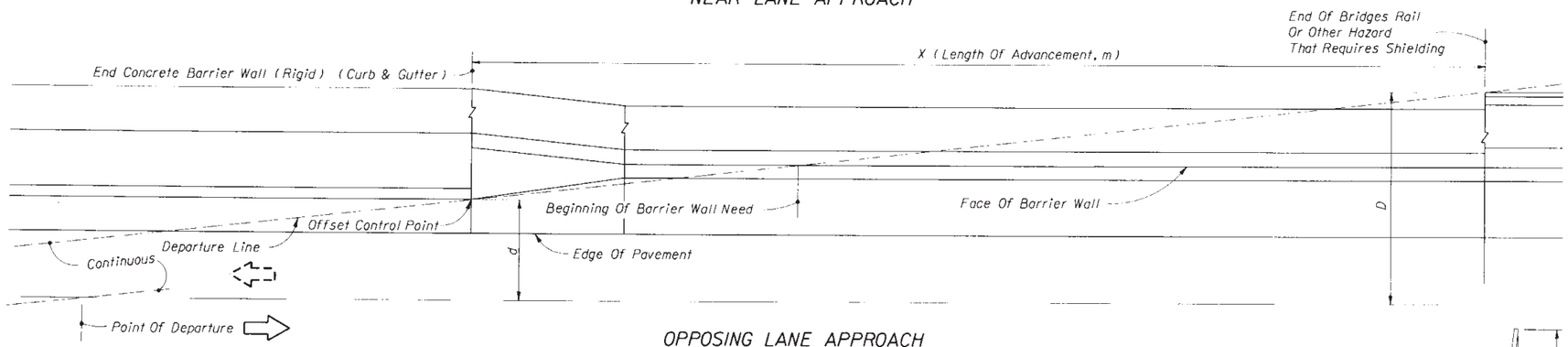

OPPOSING LANE APPROACH

WITH OR WITHOUT UTILITY STRIP - UTILITY STRIP SHOWN - SEE SHEET 7 & 8 FOR APPLICATIONS

Design Speed (km/h)	Length Of Advancement, m (X)
80 Or Less	= 16 (D-d)
Note: The minimum length of advancement for both near and opposing lane approaches is 12 m.	

Equation Variables:

D = Distance in meters from near edge of the near approach travel lane to back of hazard or clear zone width whichever is lesser. For left side hazards and clear zones on two-way undivided facilities D is measured from the inside edge of the near approach travel lane.

d = Distance in meters from the near edge of the near approach travel lane to the face of curb (at offset control point). For left side hazards on two-way undivided facilities d is measured from the inside edge of the nearest opposing travel lane.

LENGTH OF ADVANCEMENT

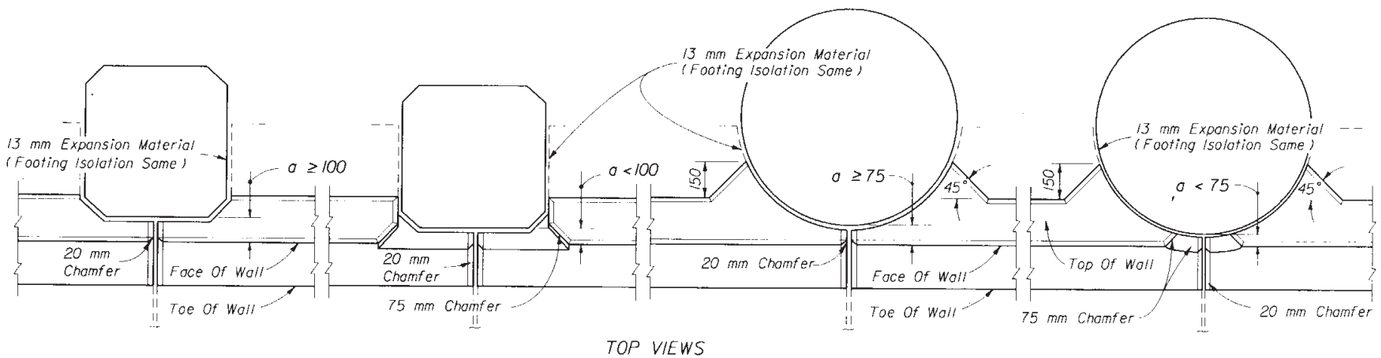

TOP VIEWS

'a' Varies (Circular Or Octagonal Hazard Not More Than 50 mm In Front Of Face Of Wall)

HAZARD PENETRATING STEM OF BARRIER WALL

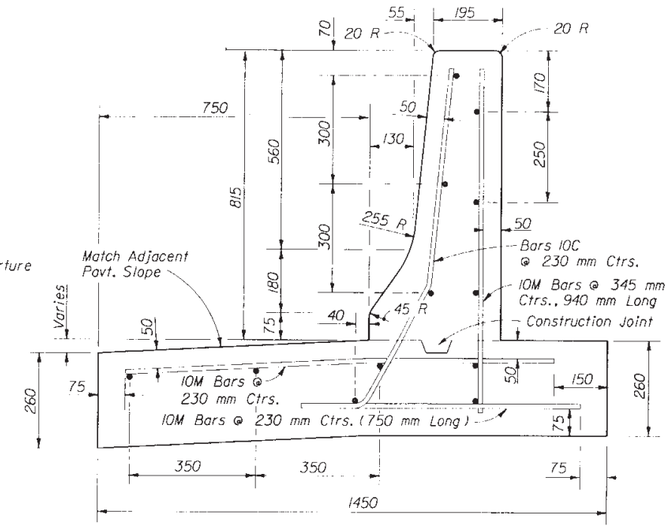

FOR HIGH SIDE

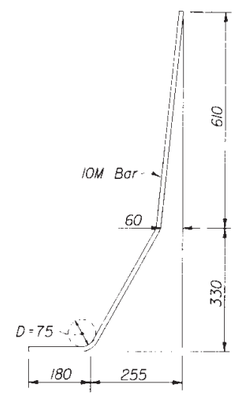

BAR 10C
BENDING DIAGRAM

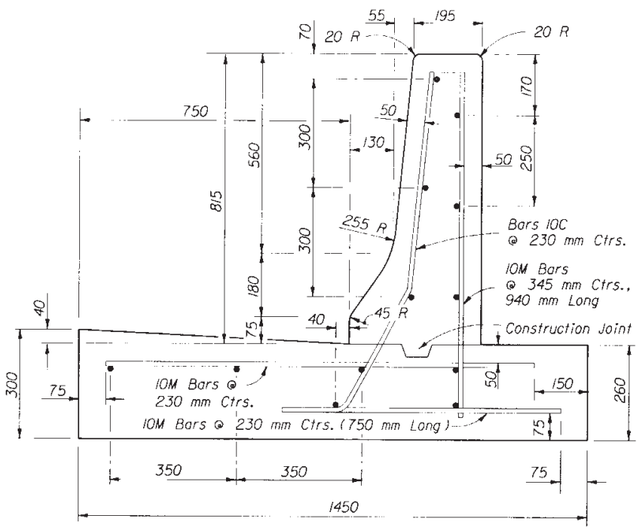

FOR LOW SIDE

Note: All longitudinal reinforcement 10M bars. Minimum segment length for this wall is 12.0 m. Shorter segments due to construction or expansion joint shall be dowled in the manner described for 'Transition Segments' on Sheet 10.
Transverse expansion joints are to be constructed at the juncture of wall transitions and curb and gutter, and at intervals so that spacing will not exceed 30.0 m.
For barrier wall inlet details see Index No. 219.
Wall to be paid for under the contract unit Price for Concrete Barrier Wall (Rigid-Curb & Gutter), Mi.

Estimated Quantities Per Linear Meter Of Wall:
Class II Concrete: 0.60 m3
Reinforcing Steel: 22.4 kg

SECTION QQ

CONCRETE BARRIER WALL (RIGID) (CURB & GUTTER)

STATE OF FLORIDA DEPARTMENT OF TRANSPORTATION
ROAD DESIGN

CONCRETE BARRIER WALL

	Names	Dates
Designed By		
Drawn By	HSD	10/85
Checked By	JBW/JVG	10/85
F.H.W.A. Approved:		

Approved By
State Roadway Design Engineer

Revision No.	Sheet No.	Index No.
94	11 of 15	410

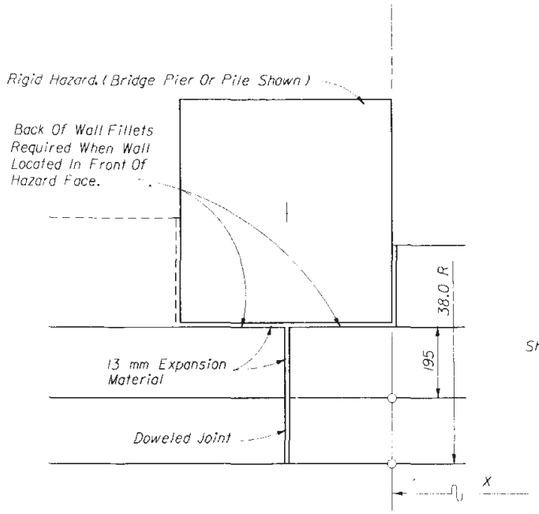

BARRIER WALL AT SQUARE OR RECTANGULAR SHAPED HAZARD

PARTIAL PLAN

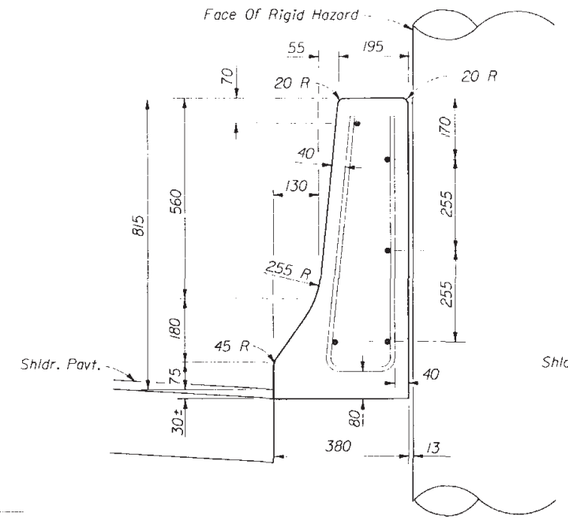

SECTION AA

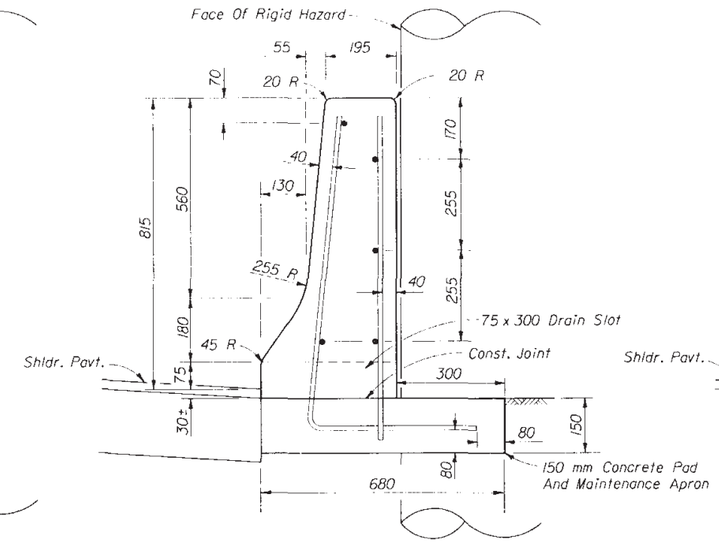

TO BE CONST. IN LIEU OF SECTION AA WHEN THRU DRAINAGE REQUIRED

SECTION BB

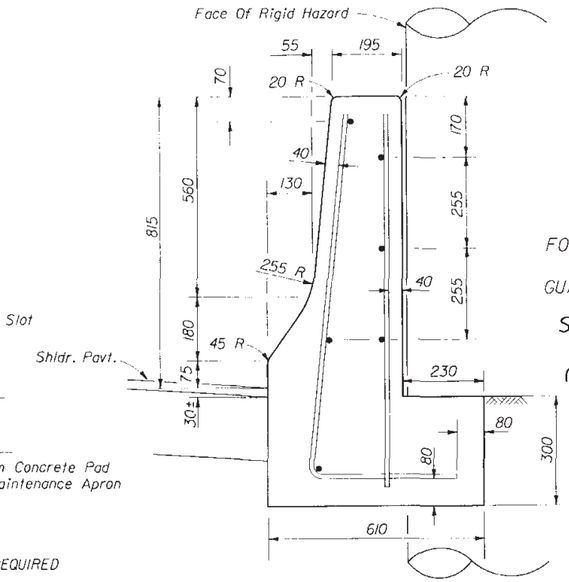

SECTION CC

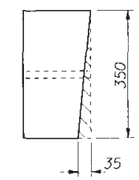

FOR USE WITH EITHER 1:10 OR 1:15 GUARDRAIL TRANSITIONS

STANDARD TIMBER OFFSET BLOCK (FIELD TRIMMED)

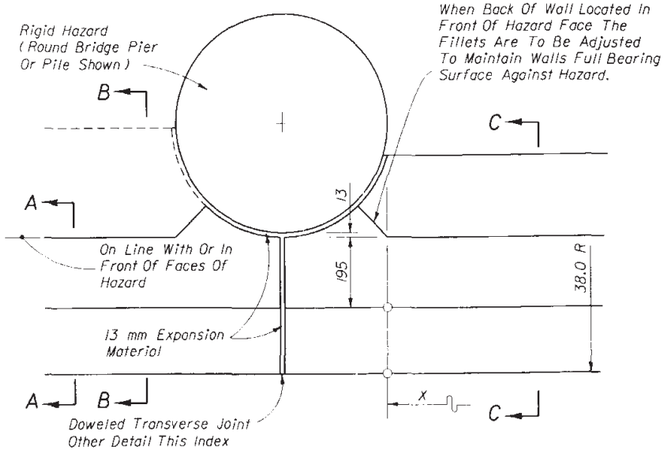

BARRIER WALL AT ROUND PIER

PARTIAL PLAN

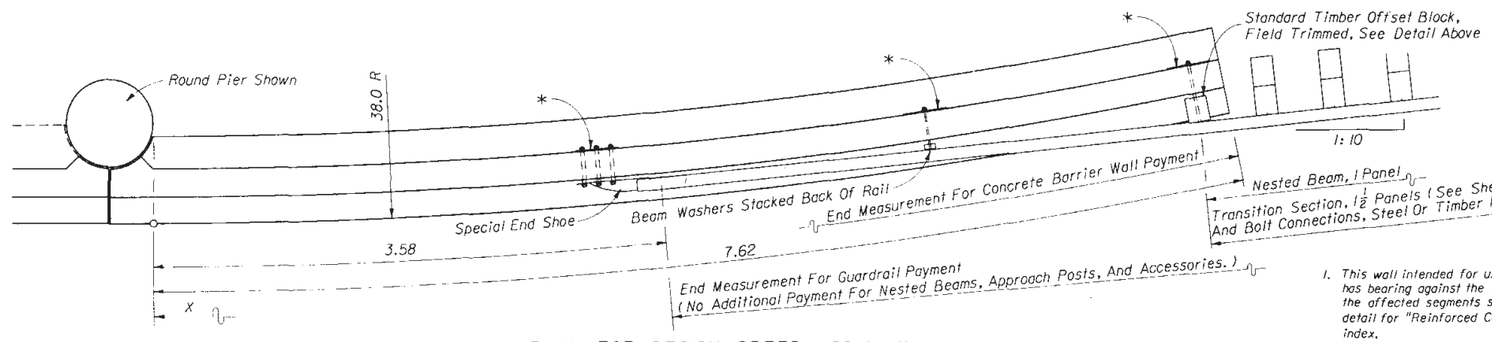

PLAN FOR DESIGN SPEED ≤ 80 km/h

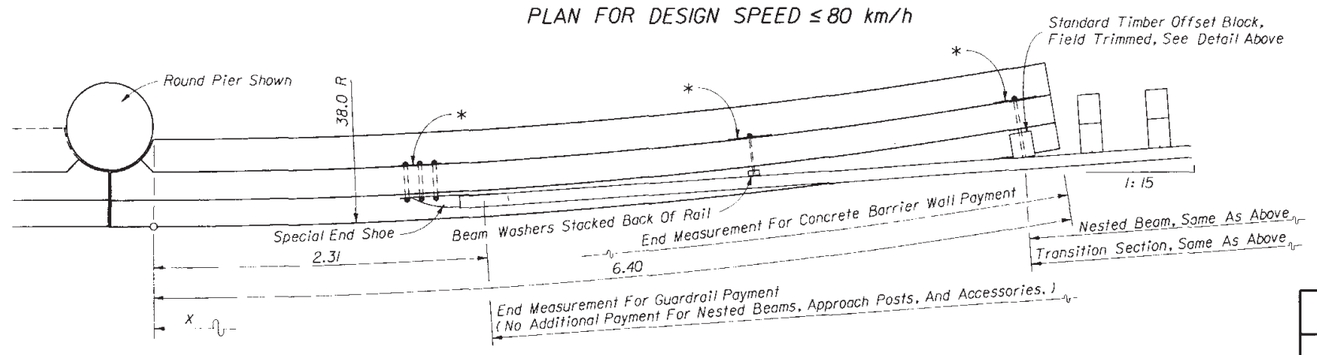

PLAN FOR DESIGN SPEED ≥90 km/h

* 6 x 300 x 300 Galvanized Steel Back-Up Plate

ARC LENGTH (m)	DISTANCE "X" (m)	OFFSETS "Y" (m)
1.22	1.22	0.018
2.44	2.44	0.079
3.66	3.65	0.177
4.88	4.86	0.311
6.10	6.07	0.488
6.40	6.37	0.536
7.32	7.27	0.701
7.62	7.57	0.759

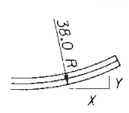

Note:
Wall may be constructed in chords having lengths ≤ 1.22 m.

NOTES

1. This wall intended for use where at least one end of each wall has bearing against the hazard; if such bearing can not be attained the affected segments shall be constructed in accordance with the detail for "Reinforced Concrete Barrier Wall (Shoulder)", this index.

   In cases where the barrier wall and slope pavement or other structure would occupy the same location, the wall and structure are to be modified as detailed in the plans.

2. The barrier wall radial segments are intended for use on approach and trailing ends of both one-way and two-way facilities. The guardrail connections shown on this sheet apply to one-way approaches and to the approaching and trailing ends of two-lane two-way facilities. On trailing ends of two-way multilane and one-way facilities the end connection on Sheet 2 may be used.

   For walls with normal offsets from hazards and their guardrail connections, see Sheets 13 and 14.

3. All vertical reinforcement 10M bars at 305 mm centers. All horizontal bars 15M bars.
4. Refer to Index No. 400 for additional guardrail information.
5. Wall to be paid for under the contract unit price for Barrier Wall Concrete (Rigid-Shoulder), Ml.

SHOULDER BARRIER WALL AT ABOVE GROUND RIGID HAZARDS WHEN GUARDRAIL OFFSET FROM HAZARD LESS THAN 0.90 METERS

STATE OF FLORIDA DEPARTMENT OF TRANSPORTATION
ROAD DESIGN

CONCRETE BARRIER WALL

	Names	Dates
Designed By		11/89
Drawn By	HSD	11/89
Checked By	JVG/KNM	11/89

Approved By Freddie Simmons
State Roadway Design Engineer

Revision No.	Sheet No.	Index No.
94	12 of 15	410

F.H.W.A. Approved:

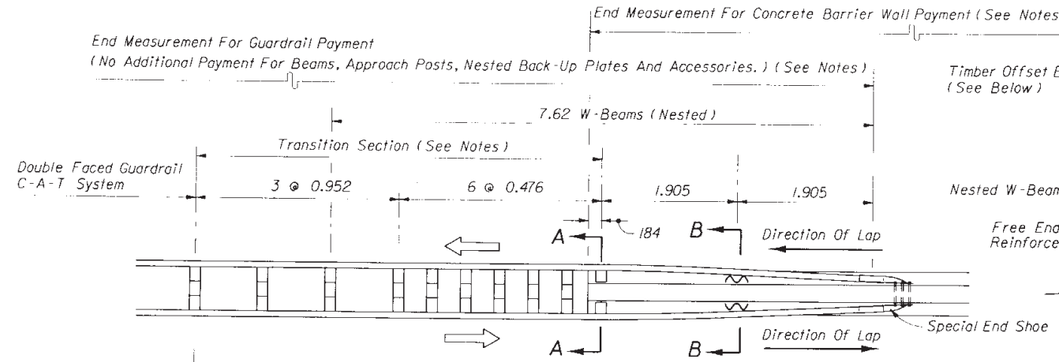

MEDIAN BARRIER WALL

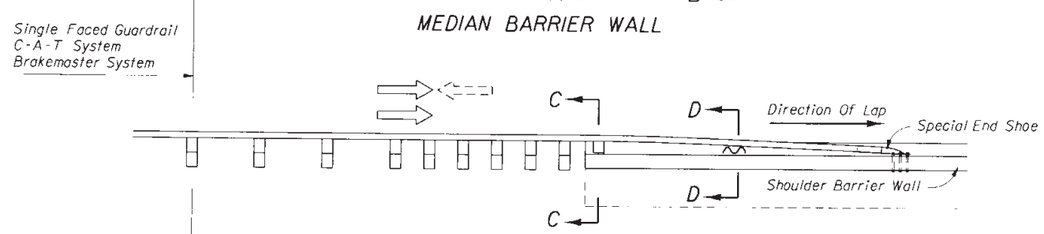

RIGHT SIDE APPROACH ONE-WAY LANES OR
RIGHT SIDE APPROACH TWO-LANE TWO-WAY

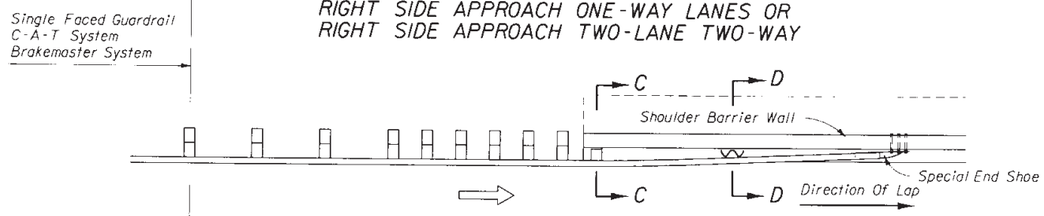

LEFT SIDE APPROACH ONE-WAY LANES

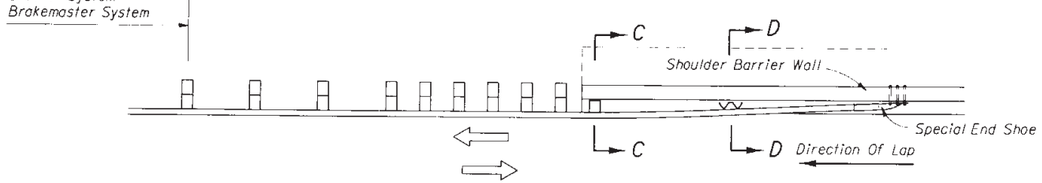

LEFT SIDE OF TWO-LANE TWO-WAY (APPROACH FOR FAR LANE)

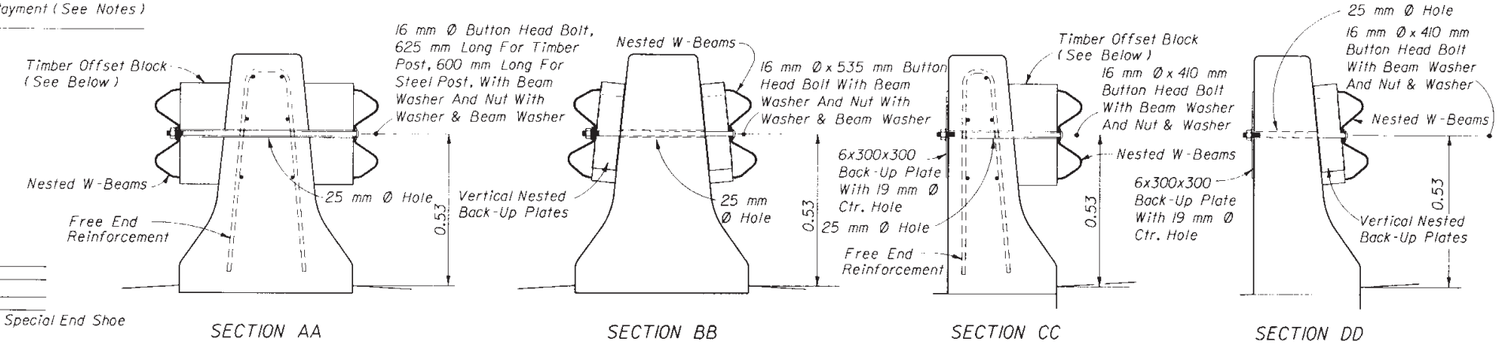

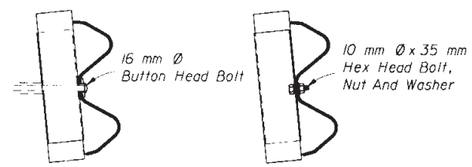

SECTION EE

SECTION FF

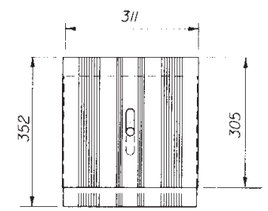

VERTICALLY NESTED BACK-UP PLATES

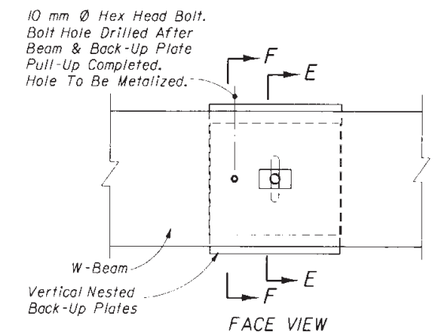

FACE VIEW

BACK-UP PLATE AND BEAM MOUNTING DETAIL

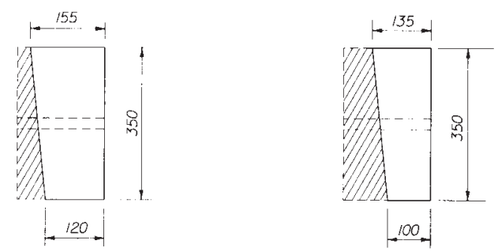

FOR DOUBLE FACED GUARDRAIL USING TIMBER POSTS AND FOR SINGLE FACED GUARDRAIL USING EITHER TIMBER OR STEEL POSTS

FOR DOUBLE FACED GUARDRAIL USING STEEL POSTS

STANDARD TIMBER OFFSET BLOCKS • FIELD TRIMMED FOR USE AT SECTIONS AA & CC

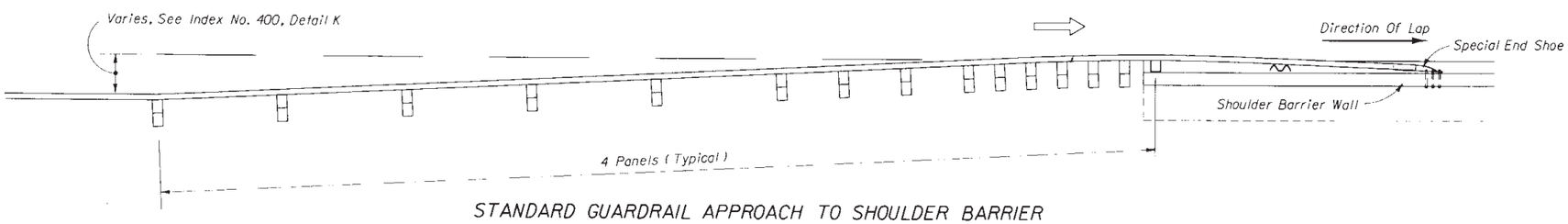

STANDARD GUARDRAIL APPROACH TO SHOULDER BARRIER

NOTES

1. The longitudinal dimensions and payment limits shown for median concrete barrier wall also apply to shoulder concrete barrier walls.
2. For barrier wall trailing end guardrail connections for one-way lanes, see Sheet 2.
3. Where reaming is necessary to fit nested beams the reamed surfaces shall be metalized in accordance with Index No. 400.
4. Steel guardrail post may be substituted for timber posts, when guardrail using steel posts connects to the transition section, however, when the C-A-T System connects to the double faced transition section, timber posts shall be used.
5. The nested beams shall not be bolted to blocks and posts at posts numbers 1, 3 and 5 from barrier wall.
6. For additional guardrail information refer to Index No. 400. For additional crash cushion/attenuating terminal information refer to Index No's. 432 and 433.

GUARDRAIL CONNECTION TO CONCRETE BARRIER WALLS

STATE OF FLORIDA DEPARTMENT OF TRANSPORTATION
ROAD DESIGN

CONCRETE BARRIER WALL

	Names	Dates
Designed By	JVG	05/91
Drawn By	HSD	05/91
Checked By	JVG	05/91

Approved By Freddie Simmons
State Roadway Design Engineer

Revision No.	Sheet No.	Index No.
94	13 of 15	410

F.H.W.A. Approved:

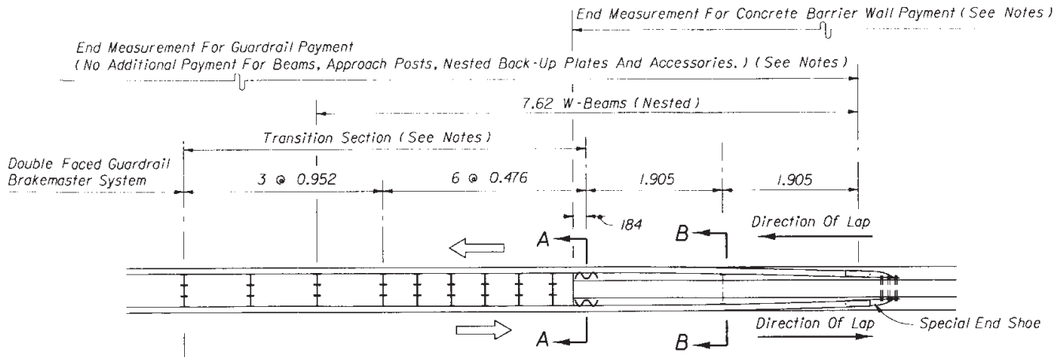

MEDIAN BARRIER WALL

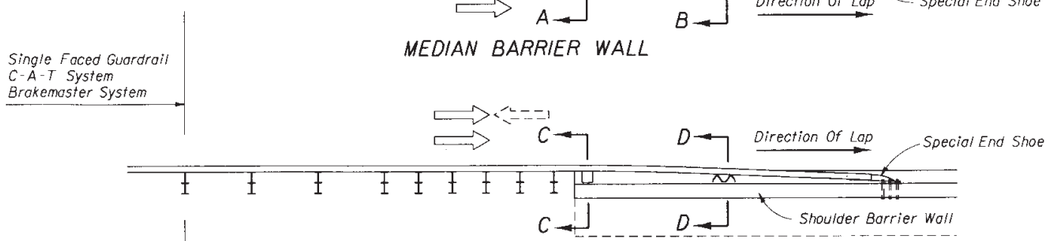

RIGHT SIDE APPROACH ONE-WAY LANES OR
RIGHT SIDE APPROACH TWO-LANE TWO-WAY

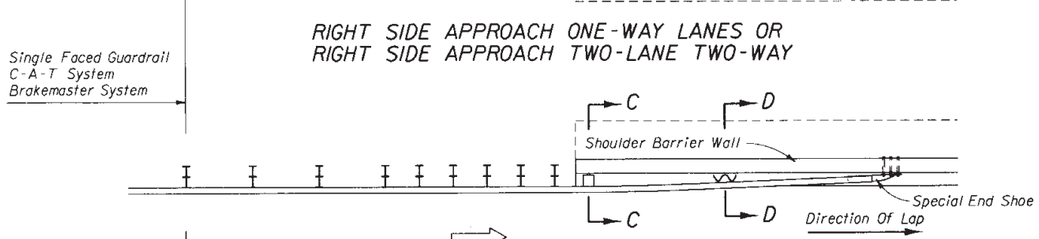

LEFT SIDE APPROACH ONE-WAY LANES

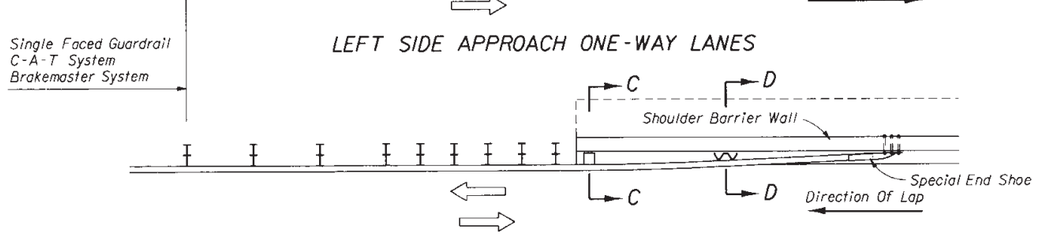

LEFT SIDE OF TWO-LANE TWO-WAY (APPROACH FOR FAR LANE)

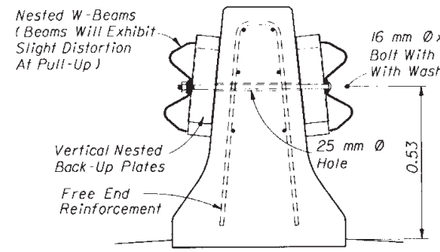

SECTION AA

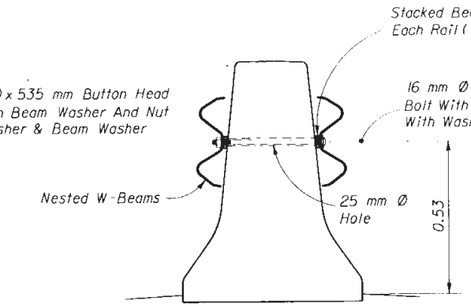

SECTION BB

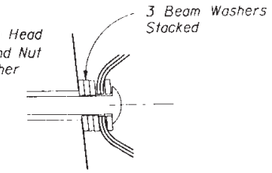

INSET

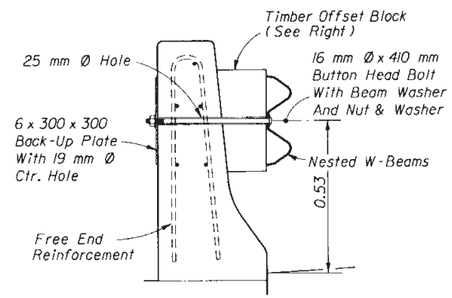

SECTION CC

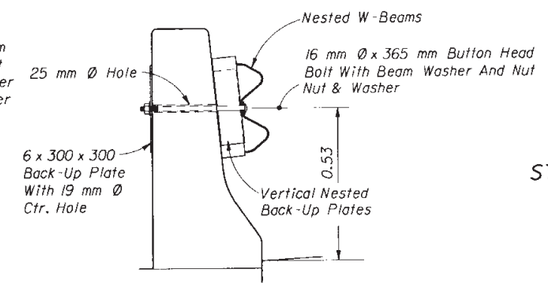

SECTION DD

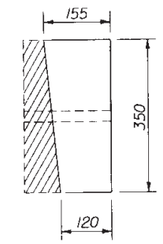

STANDARD TIMBER OFFSET BLOCK
FIELD TRIMMED
FOR USE AT SECTIONS CC

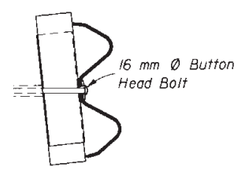

SECTION EE

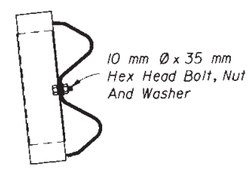

SECTION FF

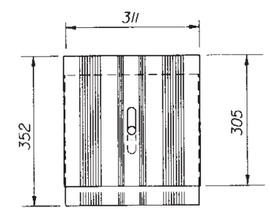

VERTICALLY NESTED
BACK-UP PLATES

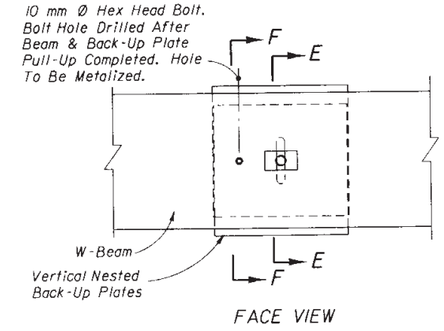

FACE VIEW

BACK-UP PLATE AND BEAM MOUNTING DETAIL

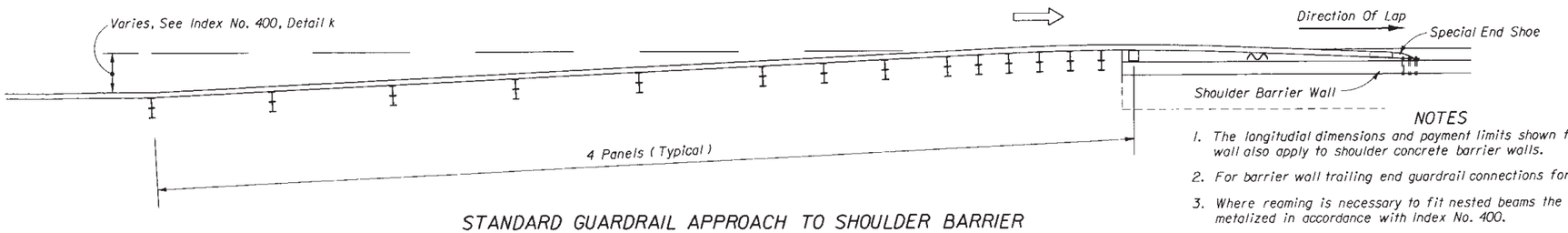

STANDARD GUARDRAIL APPROACH TO SHOULDER BARRIER

NOTES

1. The longitudial dimensions and payment limits shown for median concrete barrier wall also apply to shoulder concrete barrier walls.
2. For barrier wall trailing end guardrail connections for one-way lanes, see Sheet 2.
3. Where reaming is necessary to fit nested beams the reamed surfaces shall be metalized in accordance with Index No. 400.
4. Timber offset blocks may be substituted for steel offset blocks only where single faced guardrail using timber offset blocks connects to the transition section.
5. The nested beams shall not be bolted to blocks and posts at posts numbers 1, 3 and 5 from barrier wall.
6. For additional guardrail information refer to Index No. 400. For additional crash cushion/attenuating terminal information refer to Index No's. 432 and 433.

GUARDRAIL CONNECTION TO CONCRETE BARRIER WALLS

STATE OF FLORIDA DEPARTMENT OF TRANSPORTATION
ROAD DESIGN

CONCRETE BARRIER WALL

	Names	Dates
Designed By	JVG	05/91
Drawn By	HSD	05/91
Checked By	JVG	05/91

Approved By Freddie Simmons
State Roadway Design Engineer

Revision No.	Sheet No.	Index No.
94	14 of 15	410

F.H.W.A. Approved:

GENERAL NOTES FOR TRAPEZOIDAL BARRIER WALL

1. Concrete trapezoidal barrier wall can be either precast or cast in place. The wall is designed for zero deflection and shall have a minimum system length of 36.0 m.
2. Where concrete trapezoidal barrier wall height changes from 1070 mm to 1220 mm or from 1220 mm to 1370 mm, height change will be uniform for each 150 mm of height change per 27.0 m of wall. Steel placement shall meet the dimensional positioning requirements of 1070 mm, 1220 mm and 1370 mm high barriers at the respective points along the vertical transition, with the vertical steel uniformly lengthened and the horizontal steel uniformly splayed throughout.
3. Welded wire fabric (WWF) made in accordance with ASTM A497 may be used as an option to the conventional reinforcement for precast or cast in place barrier wall, with the exception that only conventional reinforcement shall be used for horizontal transition and half wall sections. These sections shall be cast in place with length, shape and reinforcement as shown in this Index.
4. To attain system length, precast segments shall be interconnected with rebar grids placed in the preformed slots and grouted into place. Segment length shall be not less than 9.0 m unless otherwise specified in the plans.
5. The centerline axis of the barrier shall be vertical except where the roadway is superelevated in which case it shall be normal to the cross slope unless otherwise shown in the plans or directed by the Engineer.
6. For reflective barrier marker requirements see 'STANDARD BARRIER WALL SECTIONS' and the GENERAL NOTES, Sheet 1 of 15.
7. The concrete trapezoidal barrier wall is considered by the Federal Highway Administration to be innovative and may be used as such on Federal-Aid projects.
8. The concrete trapezoidal barrier wall is to be paid for under the contract unit price for Barrier Wall Concrete (Trapezoidal), Ml. This price will include full payment for transitions, half walls, fill and concrete caps.

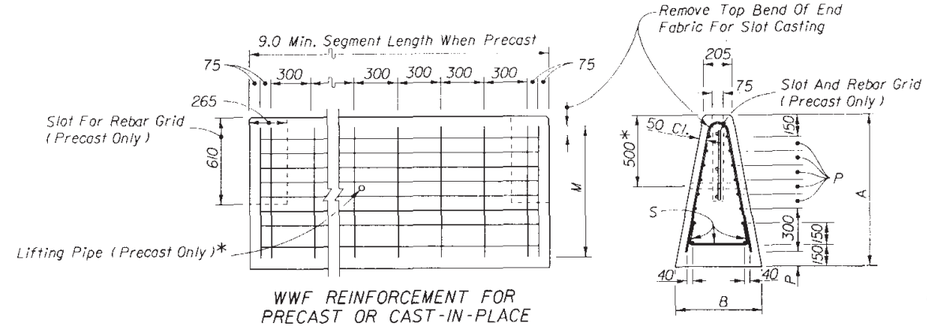

WWF REINFORCEMENT FOR PRECAST OR CAST-IN-PLACE

All Transverse Reinforcing Wire Size D14
All Longitudinal Reinforcing Wire Size D20

WELDED WIRE FABRIC REINFORCING

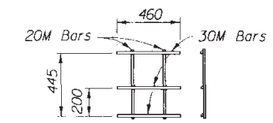

REBAR GRID FOR PRECAST INSTALLATION

* 40 mm Nominal Dia. Galvanized Steel Lifting Pipe For Precast Sections (2.3 m From Either End)

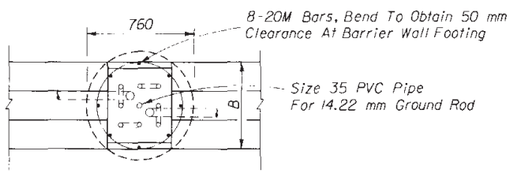

TOP VIEW

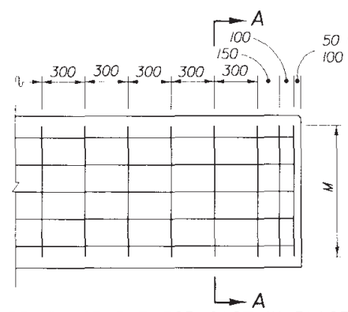

REINFORCEMENT FOR CAST-IN-PLACE

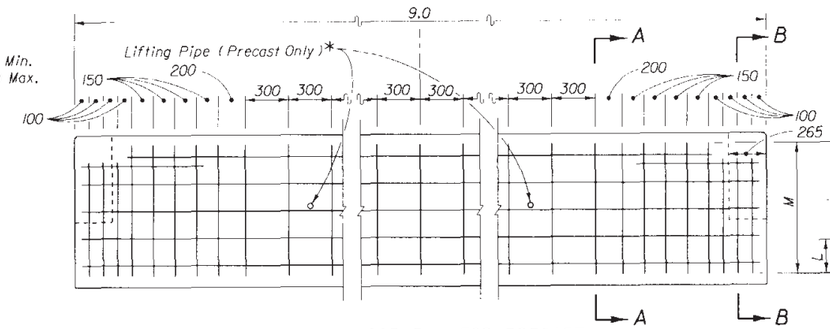

REINFORCEMENT FOR PRECAST

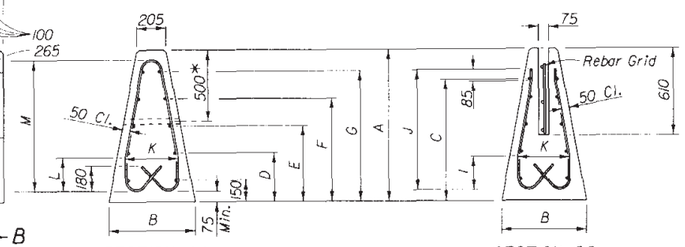

SECTION AA

SECTION BB

All Reinforcing 15M Bars

CONVENTIVONAL REINFORCING

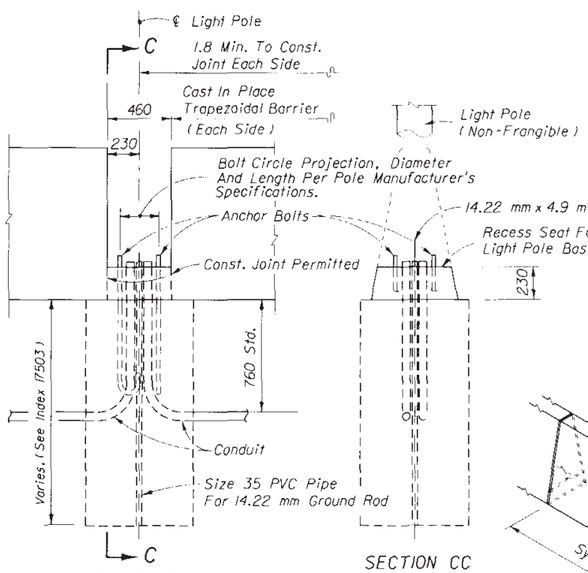

FRONT VIEW

SECTION CC

Note: For foundation design and details see Index No. 17503.
Refer to Highway Lighting Plans for size of conduit.
Payment for the 760 mm concrete shaft including reinforcing steel, anchor bolts and accessories shall be included in the contract unit price for Lighting Pole Complete, Each.

LIGHT POLE MOUNTING IN TRAPEZOIDAL SECTIONS

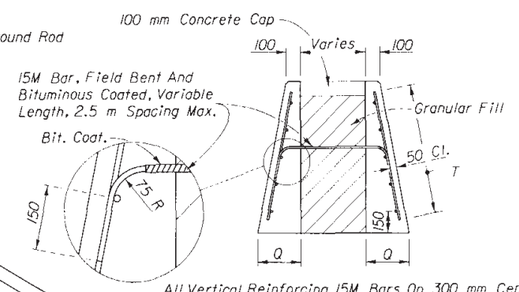

All Vertical Reinforcing 15M Bars On 300 mm Centers
All Horizontal Reinforcing 15M Bars Spaced As Tabulated

TYPICAL HALF WALLS AROUND OBSTRUCTION

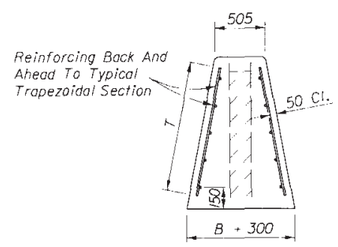

All Vertical Reinforcing 15M Bars On 300 mm Centers
All Horizontal Reinforcing 15M Bars Spaced As Tabulated

SECTION AT BEGIN AND END OF HALF WALLS

For Transition Wall Plan See DETAIL I 'PLAN'

TRANSITION SECTIONS

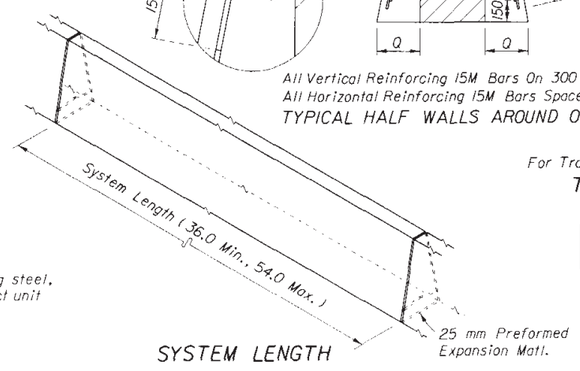

SYSTEM LENGTH

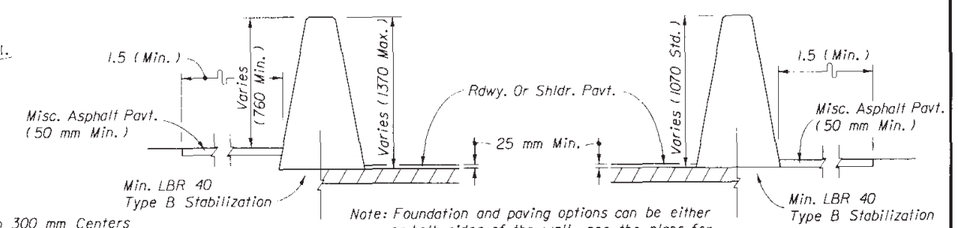

Note: Foundation and paving options can be either or both sides of the wall; see the plans for the options applied.

INDEPENDENT ROADWAY PROFILES

MATCHING ROADWAY PROFILES

TYPICAL TRAPEZOIDAL SECTIONS

Barrier Height (mm)	DIMENSIONS (mm)																	
	A	B	C	D	E	F	G	H	I	J	K	L	M	N	P	Q	S	T
1070	1070	610	850	345	535	725	915	380	235	845	380	235	915	1830	100	305	710	915
1220	1220	670	1005	380	610	840	1065	440	275	995	440	275	1065	2135	125	335	800	1065
1370	1370	725	1155	420	685	955	1220	495	310	1150	495	310	1220	2440	150	365	885	1220

TRAPEZOIDAL BARRIER WALL

STATE OF FLORIDA DEPARTMENT OF TRANSPORTATION
ROAD DESIGN

CONCRETE BARRIER WALL

	Names	Dates
Designed By	FHWA	11/93
Drawn By	HKH	11/93
Checked By	JVG	11/93

Approved By Freddie Simmons
State Roadway Design Engineer

Revision No.	Sheet No.	Index No.
94	15 of 15	410

F.H.W.A. Approved:

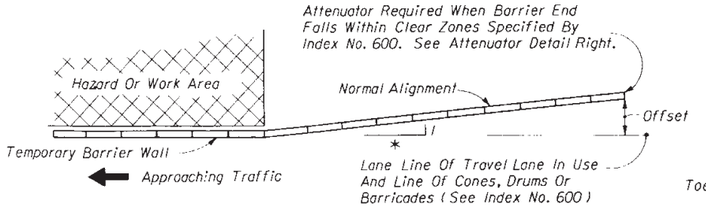

* Flare In Accordance With Other FDOT Roadway And Traffic Design Standards Or As Called For In The Plans, But Not Steeper Than 1: 10.

PLAN

Notes:

1. Temporary barrier to be placed as shown in plans or as directed by the Engineer.
2. For additional information refer to Index No. 600.

WALL ALIGNMENT

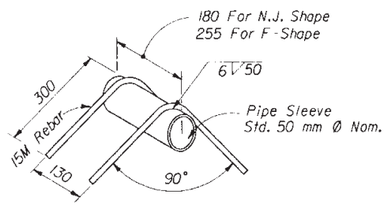

LIFTING SLEEVE

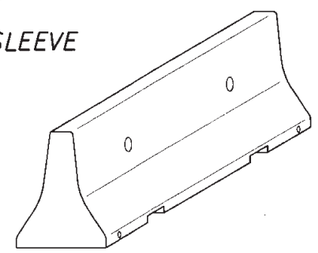

See Optional End Treatments For End Configurations Sheet 2 Of 2

PICTORIAL VIEW

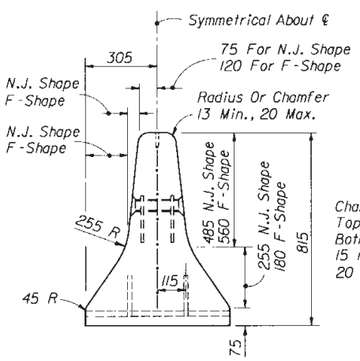

SECTION

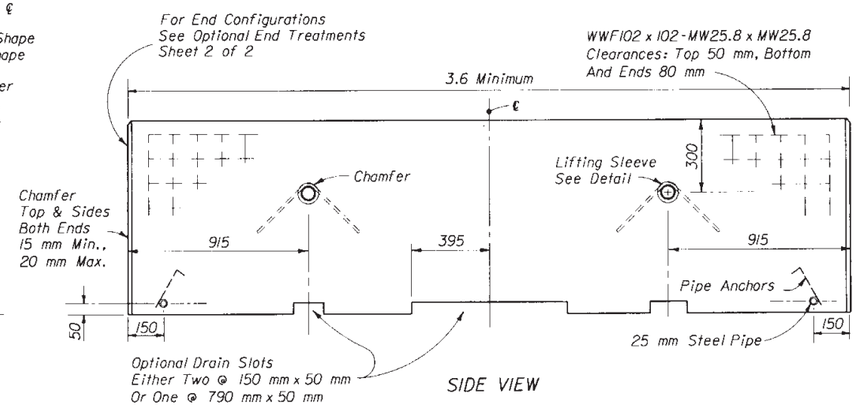

SIDE VIEW

WALL UNIT

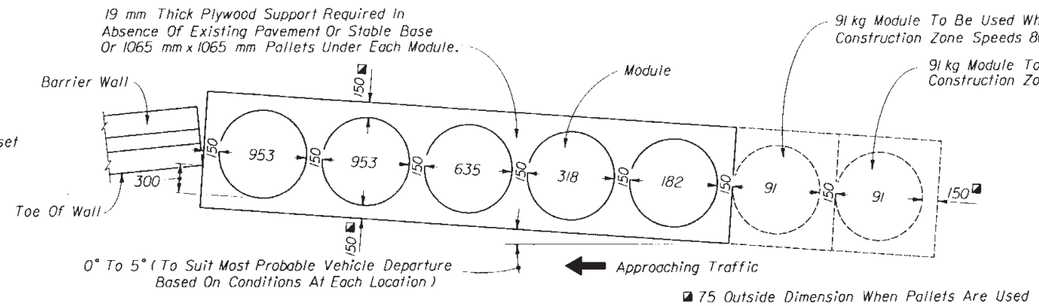

PLAN

Notes :

1. Number shown inside module indicates the weight in kilograms of sand. All modules are approximately 915 mm in height and in diameter.
2. Inertial attenuator to be installed in accordance with manufacturers specifications and recommendations.
3. A Type I Object Marker panels shall be placed on the approach end module in accordance with Index No. 17353.
4. Inertial attenuator modules shall be paid for individually under the contract unit price for Impact Attenuator Modules Vehicular (Inertial) (Temp), EA. Relocation of attenuators shall be paid for under the contract unit price for Relocate Temporary Vehicular Impact Attenuator, EA.

TEMPORARY INERTIAL ATTENUATOR

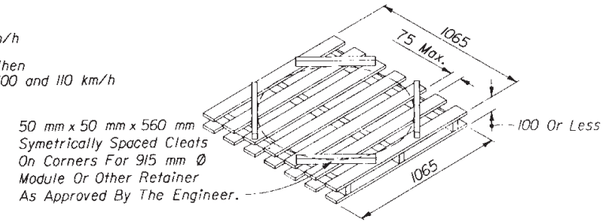

Pallet Shall Be Constructed Of Wood Or Other Frangible Or Resilient Materials Other Than Metals, And, Shall Be Sufficiently Durable To Support Modules For Their Expected Period Of Use; Wood Pallet Detail Shown.

PALLET DETAIL

GENERAL NOTES

1. Temporary concrete barrier wall units may be either the New Jersey safety shape or the F-Shape configuration, however, intermixing of units with different shapes in a continuous run of barrier will not be permitted.
2. Material and workmanship for the wall shall meet the requirements of Sections 400 and 521 of the Standard Specifications, except the bottom of the unit can be finished to a dense uniform surface by floating in lieu of the Class 3 finish. Concrete shall be Class II.
3. The wall units shall be used for temporary barrier walls unless the plans specify other types of barrier walls.
4. Type C Steady-Burn Lights are to be mounted on top of temporary concrete barrier walls that are used as barriers along travel ways in work zones. The lights are to be spaced at 15.0 m centers. For additional information refer to 'Warning Lights' on Index No. 600.
5. Wall units shall not be used for permanent barrier wall construction regardless of unit length, unless specifically permitted by the plans.
6. Wall units with any of the optional end treatments may be used for temporary barrier wall installations, subject to the following requirements:
   (a) The plans may specify the option.
   (b) Option 1 and Option 2 units may not be mixed with each other or with Option 3 or Option 4.
   (c) Option 3 and Option 4 units are interchangable and may be mixed in a single run of wall, however, they may not be mixed with Option 1 or Option 2.
   (d) Option 1 units cast prior to August 1, 1982 shall be installed in accordance with Option 1 annotations.
7. Wall units may be reused provided they have the structural integrity and surface qualities of new units.
8. Wall units shall be furnished by the Contractor except when the plans stipulate the availability of Department owned units. Regardless of unit source the Contractor shall furnish all hardware and shall be responsible for all handling including loading, transport, unloading, stockpiling, installation, removal and return.

   When the plans stipulate that temporary concrete barrier wall(s) are to become property of the Department at completion of the project, only Option 4 end treatment units are to be used, except as otherwise specified in the plans.

   Wall units with plain ends will not be permitted regardless of end ties or anchorage.
9. Wall units used for work zone traffic control and other temporary applications shall be paid for under the contract unit price for Barrier (Temporary) Concrete, Mi.

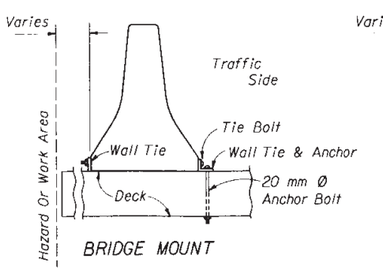

BRIDGE MOUNT

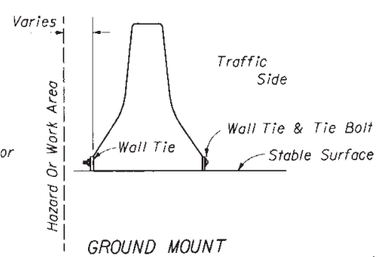

GROUND MOUNT

Anchor bolts shall have a pullout and shear capacity of 62 kN. Wedge or chemical anchor bolts may be used in lieu of bolt, washer and nut assembly shown. Core drills shall be used to construct through bolt holes, and, drills specified by the manufacturer shall be used to construct expansion and chemical anchor bolt holes. After removal of walls, anchors shall be removed to 25 mm min. below deck surface and holes filled with epoxy grout.

WALL TIES & ANCHORAGE

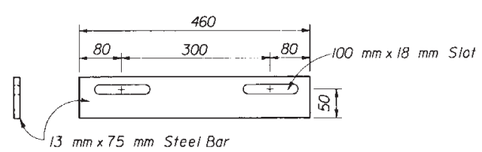

WALL TIE

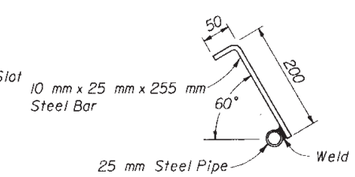

WALL TIE & ANCHOR PIPE

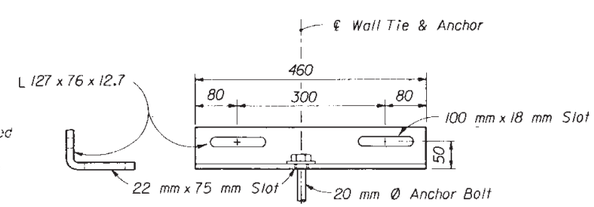

WALL TIE & ANCHOR

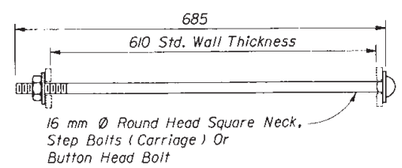

WALL TIE BOLT

STATE OF FLORIDA DEPARTMENT OF TRANSPORTATION
ROAD DESIGN

PRECAST CONCRETE TEMPORARY BARRIER WALL

	Names	Dates	Approved By Freddie Simmons State Roadway Design Engineer		
Designed By					
Drawn By	HSD	04/82			
Checked By	JVG	04/82	Revision No.	Sheet No.	Index No.
F.H.W.A. Approved:		04/28/82	94	1 of 2	415

OPTION 1 ANNOTATIONS

1. Tolerances: Tongue 0 to (-) 6 mm; Groove 0 to (+) 6 mm
2. Barrier unit without anchor pipes, with toe heights of not less than 75 mm nor more than 100 mm and with or without bottom keyways, produced prior to August 1, 1982 and used on projects let to contract after August 1, 1982 may be used under the following adaptations:
   - (a) Ground Mounted Units: Units shall be tied front and back with wall ties mounted 100 mm above the top of the toe by anchors located 150 mm from the end of the unit. Anchor bolts shall be 16 mm diameter providing a minimum pull-out strength of 40 kN and may be either threaded insert, wedge or epoxy grouted sleeve types with 115 mm minimum imbedment.
   - (b) Bridge Mounted Units: Units shall be tied front and back same as ground mounted units. In addition, an "L" clip shall be welded on center to the bottom edge of the front wall tie to provide deck anchorage using the 20 mm diameter anchor bolt. The clip shall have a 13 mm x 50 mm minimum cross section and may be fabricated by either method shown in the sketches below. Units with varying toe heights will not be permitted in any single run of wall.

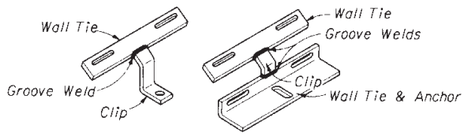

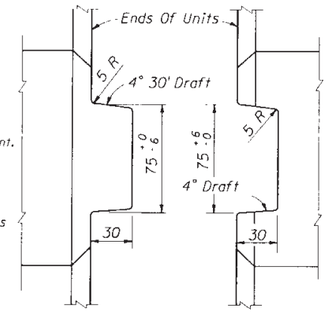

TOP VIEW

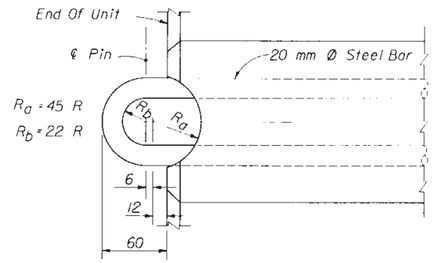

TOP VIEW

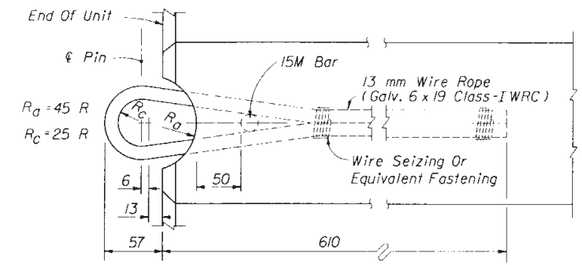

TOP VIEW

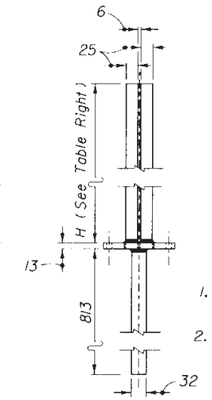

END VIEW

H	Screen Size (mm)
635	600
762	700
940	900
1270	1200

NOTES

1. All material shall be A36 steel galvanized according to ASTM A153.
2. Refer to Index No. 460.

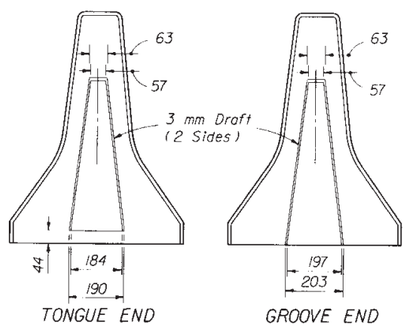

TONGUE END GROOVE END

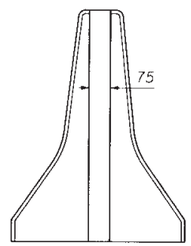

END VIEW

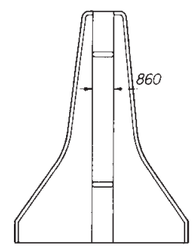

END VIEW

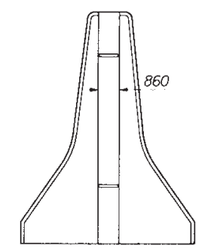

END VIEW

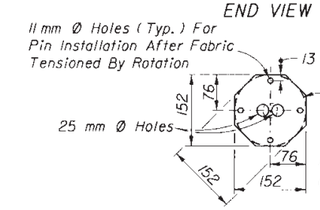

PLAN

NOTICE:
THIS STEEL CONNECTING PIN IS A PROPRIETARY DESIGN. ANY INFRINGEMENT ON THE PROPRIETARY RIGHTS OF THE DESIGNER SHALL BE THE SOLE RESPONSIBILITY OF THE USER.

STEEL CONNECTING PIN FOR OPTIONS 3 AND 4 WHEN KNITTED POLYESTER GLARE SCREEN IS SPECIFIED

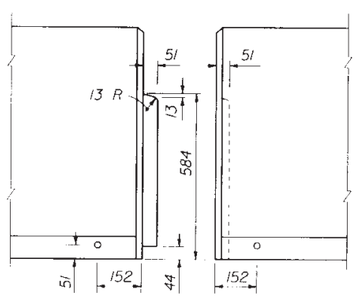

SIDE VIEW

NOTICE: OPTION 1 IS A PROPRIETARY DESIGN. ANY INFRINGEMENT ON THE PROPRIETARY RIGHTS OF THE DESIGNER SHALL BE THE SOLE RESPONSIBILITY OF THE USER.

TRAPEZOIDAL TONGUE AND GROOVE
OPTION 1

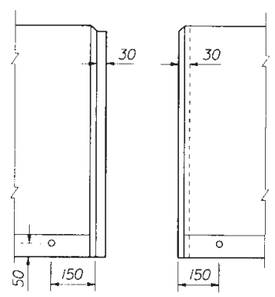

SIDE VIEW

STRAIGHT TONGUE AND GROOVE
OPTION 2

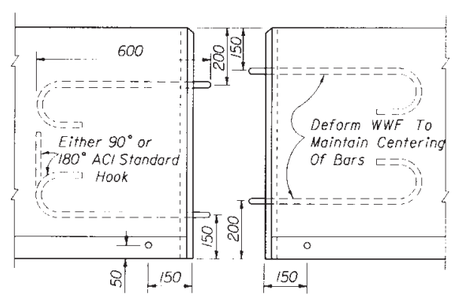

SIDE VIEW

ROUND BAR CONNECTOR
OPTION 3

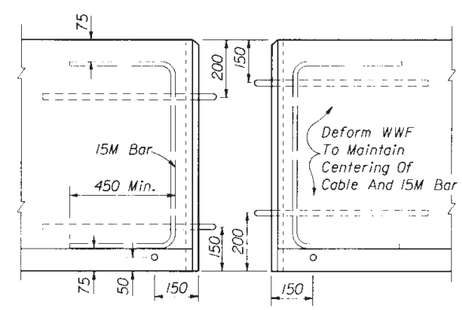

SIDE VIEW

WIRE ROPE CONNECTOR
OPTION 4

WALL TIE AND ANCHORAGE REQUIREMENTS			
END OPTION	GROUND MOUNT	BRIDGE MOUNT	REMARKS
1	Yes	Yes	
2	Yes	Yes	
3	No	Yes	
4	No	Yes	

Note: When the plans call for wall units furnished by the Department, ground and bridge mount ties and anchors will be required. Tie and anchor assemblies shall be furnished by the Contractor.

OPTIONAL END TREATMENTS FOR WALL UNITS

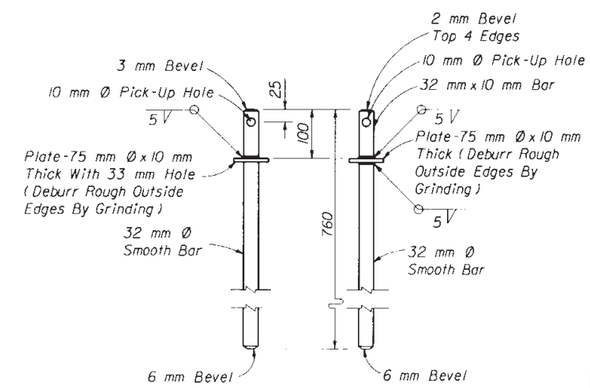

OPTIONAL PINS

STEEL CONNECTING PIN FOR OPTIONS 3 AND 4

STATE OF FLORIDA DEPARTMENT OF TRANSPORTATION
ROAD DESIGN

PRECAST CONCRETE TEMPORARY BARRIER WALL

	Names	Dates
Designed By		
Drawn By	HSD	04/82
Checked By	JVG	04/82
F.H.W.A. Approved:		04/28/82

Approved By Judi Simmons
State Roadway Design Engineer

Revision No.	Sheet No.	Index No.
94	2 of 2	415

INDEX OF SHEETS

SHEET NO.	DESCRIPTION
1	General System Features And Bay Selection Guidelines
2	Concrete Backup Wall Assembly
3	Tension Strut Backup Assembly
4	Wide Flange Backup Assembly
5	Concrete Barrier Wall Backup Assembly
6	Transition Assembly Features

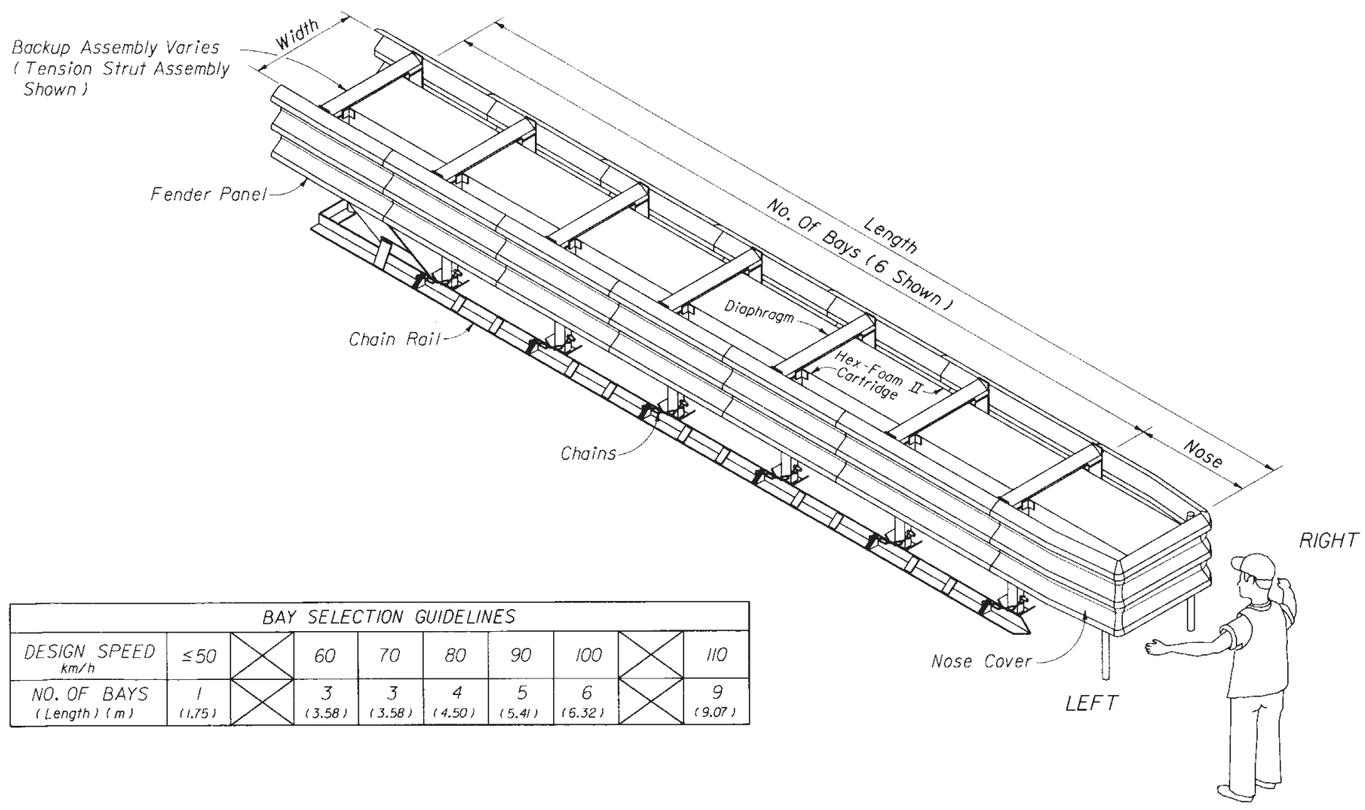

BAY SELECTION GUIDELINES									
DESIGN SPEED km/h	≤50		60	70	80	90	100		110
NO. OF BAYS (Length) (m)	1 (1.75)		3 (3.58)	3 (3.58)	4 (4.50)	5 (5.41)	6 (6.32)		9 (9.07)

GENERAL NOTES

1. The energy absorbing system represented on this standard drawing is a proprietary design by Energy Absorption Systems, Inc. and marketed under the trade name G-R-E-A-T, short for Guard Rail Energy Absorbing Terminal. Any infringement on the rights of the designer shall be the sole responsibility of the user.

2. This standard drawing is produced by the Florida Department Of Transportation solely for use by the Department and its assignees. This standard drawing provides the general graphics and information necessary to field identify component parts of the G-R-E-A-T System (G-R-E-A-T) and their incorporation into a whole system.

3. This standard drawing is sufficient for plan details for the G-R-E-A-T installed as a free standing system or installed in connection with concrete barrier walls and other fixed barrier systems, and precludes the requirement for shop drawing submittals unless the plans otherwise call for such submittals.

4. The G-R-E-A-T shall be assembled and installed in accordance with the manufacturers detailed drawings, procedures and specifications.

5. The G-R-E-A-T is available in 610, 762, and 914 mm widths. Each of these widths can be matched to any of the four backup assemblies shown in this index. The four backup assemblies are to be utilized as follows:
   - (a) Independent systems:
     - (1) Concrete backup wall assemblies.
     - (2) Tension strut backup assemblies.
     - (3) Wide flange backup assemblies.
   - (b) Dependent systems:
     - (1) Concrete barrier wall backup assemblies.
   - (c) Combination systems:
     - (1) Any of the independent systems (a) above with thrie beam/W-beam side panel transition assembly connected to single face or double face guardrail systems.
     - (2) Dependent systems (b) above with bracket assemblies and transition panels connected to safety shaped concrete barrier wall systems.

   Variations from the uses described above shall be constructed as detailed in the plans and/or as required by shop drawings.

6. Only the G-R-E-A-T Hex-Foam II cartridges shall be used in all bays and the nose section.

7. Concrete foundations and backup blocks shall be constructed with 28 MPa min. compressive strength concrete.

8. The G-R-E-A-T shall be constructed on cross slopes 12.5: 1 or flatter.

9. All metallic components shall meet the galvanizing requirements for guardrail, Index No. 400.

10. The G-R-E-A-T System will be paid for under the contract unit price for Impact Attenuator Vehicular (GREAT), Each.

DESIGN NOTES AND GUIDELINES

1. The G-R-E-A-T System (G-R-E-A-T) is designed to cushion automobile end-on hits and to redirect automobiles from side hits. The G-R-E-A-T is designed to shield narrow fixed hazards or the ends of other fixed barrier systems. The number of bays to be used in a specific unit will be determined by the design speed, except where the Engineer determines that another speed is more applicable. The unit width will be determined by the width of the object to be shielded or by the connecting barrier system. The backup assembly for a specific unit will be determined by either (a) the unit standing free of the object to be shielded or (b) the barrier system(s) to which it is connected.

2. The G-R-E-A-T is a restorable system that is particularly suited to shielding hazards subject to high speed traffic, high volume traffic, and/or traffic with a history of frequent errant vehicle departures from the roadway or the potential exists for such departures. The G-R-E-A-T alone is not suited to shielding a wide hazard. The G-R-E-A-T is particularly suited to shielding hazards where the approach space is limited; and, is particularly suited to conditions where the terminal must be located close to the traffic lane.

3. Currently the Department does not recognize other proprietary items as being equally suitable alternatives to the G-R-E-A-T, and until such alternatives are available, the G-R-E-A-T need not be bid against other proprietary items.

GENERAL SYSTEM FEATURES AND BAY SELECTION GUIDELINES

STATE OF FLORIDA DEPARTMENT OF TRANSPORTATION
ROAD DESIGN

G-R-E-A-T SYSTEM

	Names	Dates
Designed By	MFG/JVG	10/91
Drawn By	JBW	10/91
Checked By	JVG/RER	10/91

Approved By Freddie Simmons
State Roadway Design Engineer

Revision No.	Sheet No.	Index No.
94	1 of 6	431

F.H.W.A. Approved:

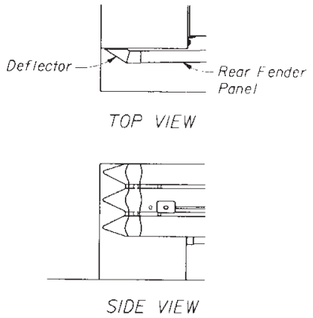

Note: Deflector required on left side for bidirectional facilities unless extension or transition panel called for.

INSET

ASSEMBLY LENGTHS		
NO. OF BAYS	L (m) (Bays)	L_0 (m) (Foundation)
1	1.75	1.98
2	2.67	2.90
3	3.58	3.81
4	4.50	4.72
5	5.41	5.64
6	6.32	6.55
8	8.15	8.38
9	9.07	9.30

A (mm) (Assembly Width)	B (mm) (Anchor Bolt Ctrs.)
610	686
762	838
914	991

Note: Bolt longitudinal spacing to be in accordance with the manufacturers installation drawings and specifications.

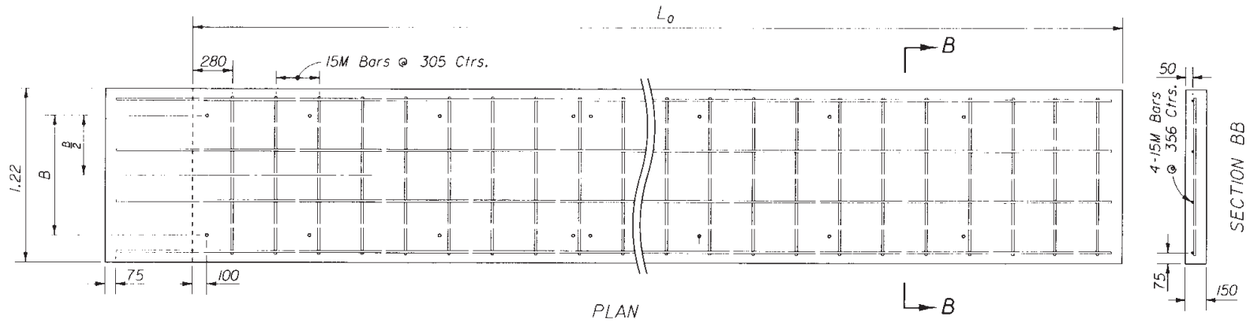

FOUNDATION

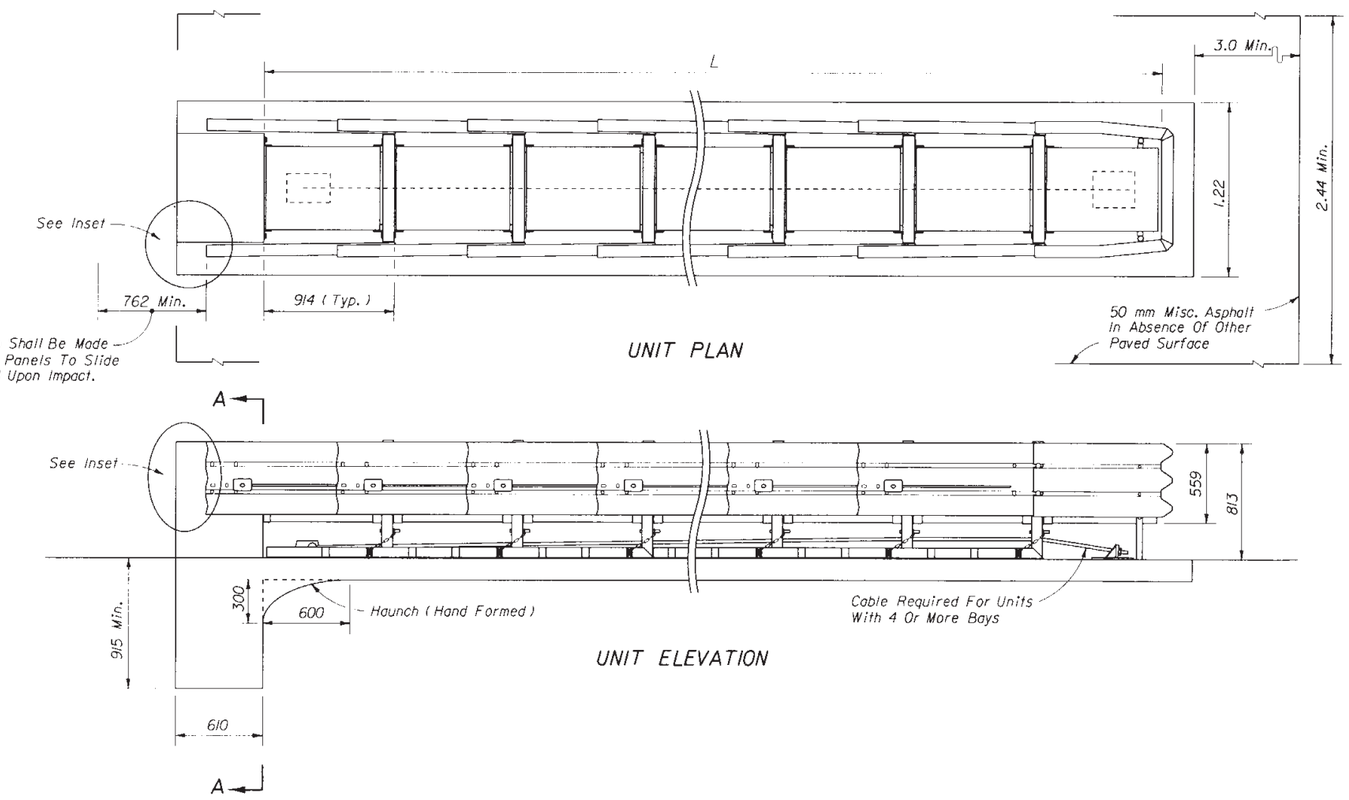

UNIT PLAN

UNIT ELEVATION

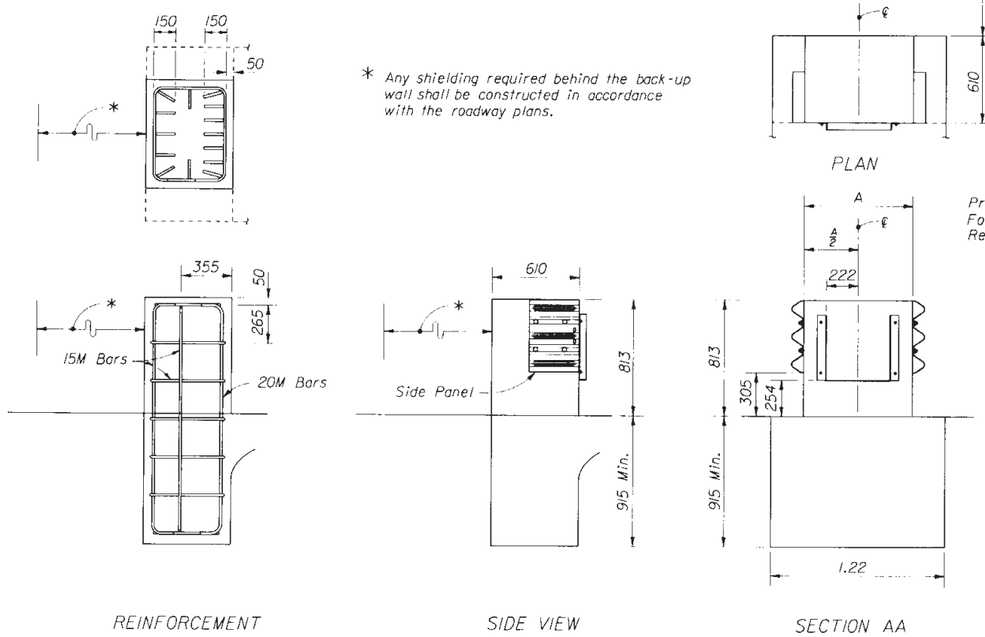

REINFORCEMENT

SIDE VIEW

SECTION AA

WALL DETAILS

* Any shielding required behind the back-up wall shall be constructed in accordance with the roadway plans.

NOTES

1. For the number of bays required see table, Sheet 1.
2. See Transition Assembly Features for guardrail connections.
3. For design information see the General Notes.

CONCRETE BACKUP WALL ASSEMBLY

STATE OF FLORIDA DEPARTMENT OF TRANSPORTATION
ROAD DESIGN

G-R-E-A-T SYSTEM

	Names	Dates
Designed By	MFG/JVG	10/91
Drawn By	JBW	10/91
Checked By	JVG/RER	10/91

Approved By Freddie Simmons
State Roadway Design Engineer

Revision No.	Sheet No.	Index No.
94	2 of 6	431

F.H.W.A. Approved:

A (mm) (Assembly Width)	B (mm) (Anchor Bolt Ctrs.)
610	686
762	838
914	991

Note: Bolt longitudinal spacing to be in accordance with the manufacturers installation drawings and specifications.

ASSEMBLY LENGTHS		
NO. OF BAYS	L (m) (Bays)	L_o (m) (Foundation)
1	1.75	3.05
2	2.67	3.05
3	3.58	3.96
4	4.50	4.88
5	5.41	5.79
6	6.32	6.71
8	8.15	8.53
9	9.07	9.45

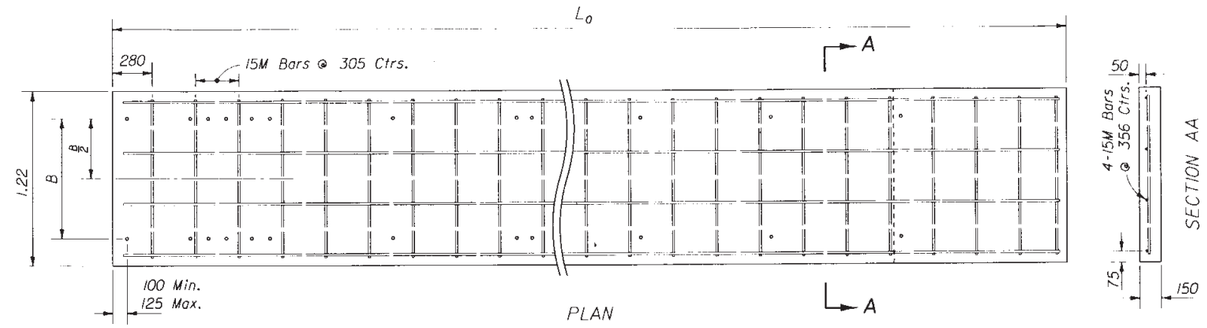

PLAN

FOUNDATION

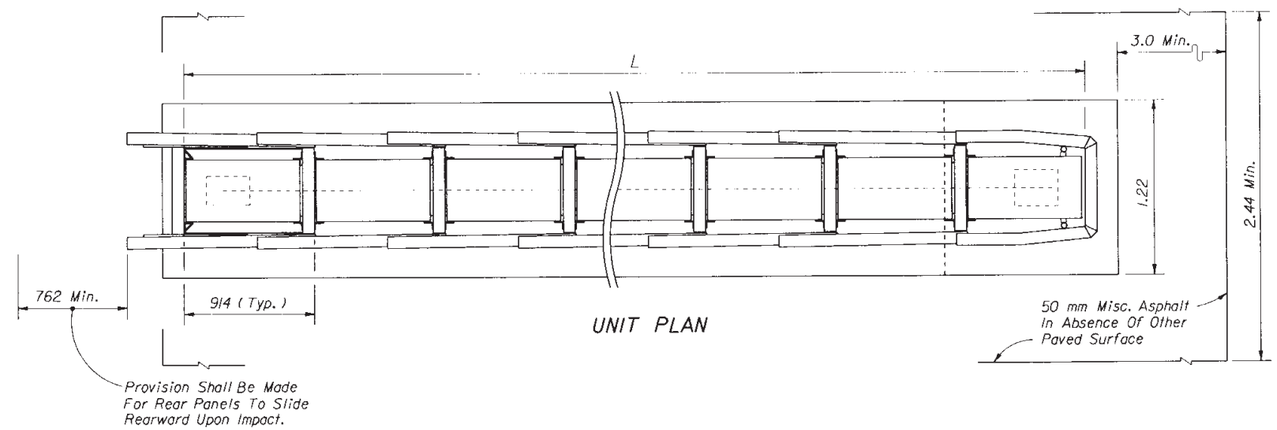

UNIT PLAN

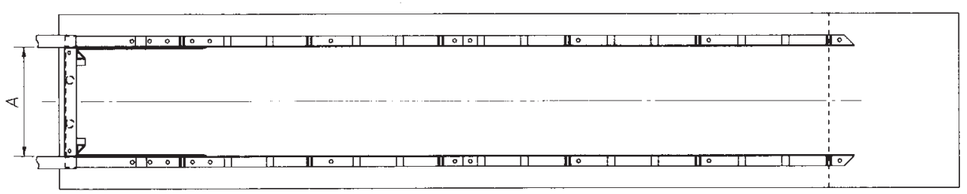

STRUT AND RAIL PLAN

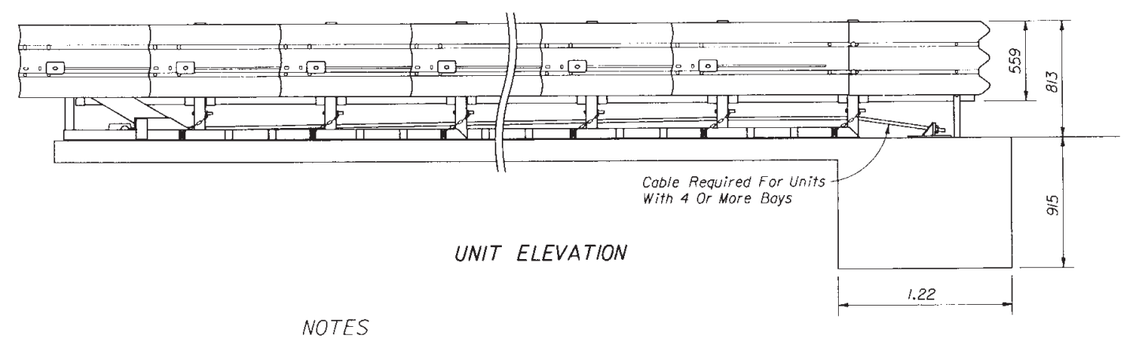

UNIT ELEVATION

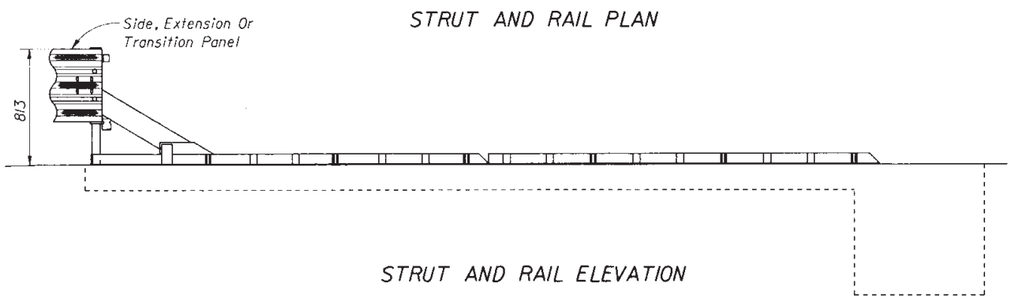

STRUT AND RAIL ELEVATION

NOTES

1. For the number of bays required see table, Sheet 1.
2. See Transition Assembly Features for guardrail connections.
3. For design information see the General Notes.

TENSION STRUT BACKUP ASSEMBLY

STATE OF FLORIDA DEPARTMENT OF TRANSPORTATION
ROAD DESIGN

G-R-E-A-T SYSTEM

	Names	Dates
Designed By	MFG/JNG	10/91
Drawn By	JBW	10/91
Checked By	JVC/RER	10/91

Approved By Freddie Simmons
State Roadway Design Engineer

Revision No.	Sheet No.	Index No.
94	3 of 6	431

F.H.W.A. Approved:

ASSEMBLY LENGTHS		
NO. OF BAYS	L (m) (Bays)	L_0 (m) (Foundation)
1	1.75	2.36
2	2.67	3.28
3	3.58	4.19
4	4.50	5.11
5	5.41	6.02
6	6.32	6.93
8	8.15	8.76
9	9.07	9.68

A (mm) (Assembly Width)	B (mm) (Post Spacing)	C (mm) (Anchor Bolt Ctrs.)
610	305	686
762	457	838
914	610	991

Note: Bolt longitudinal spacing to be in accordance with the manufacturers installation drawings and specifications.

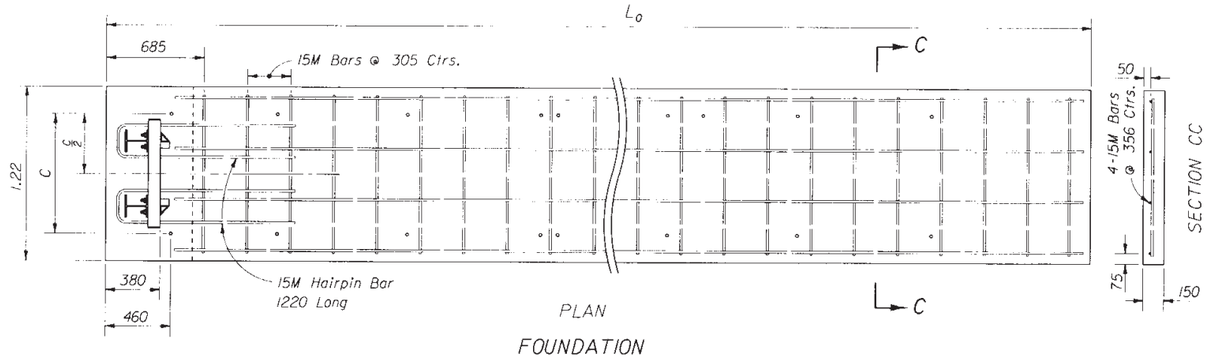

FOUNDATION

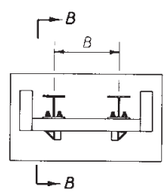

PLAN

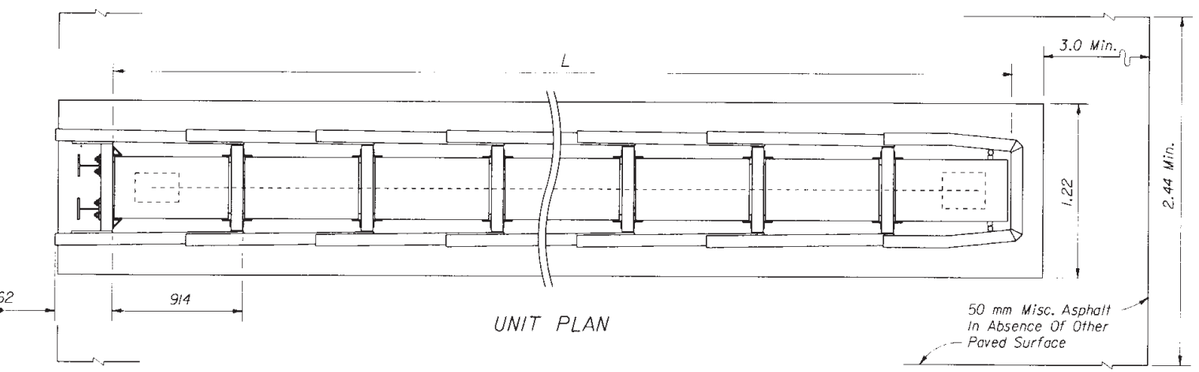

UNIT PLAN

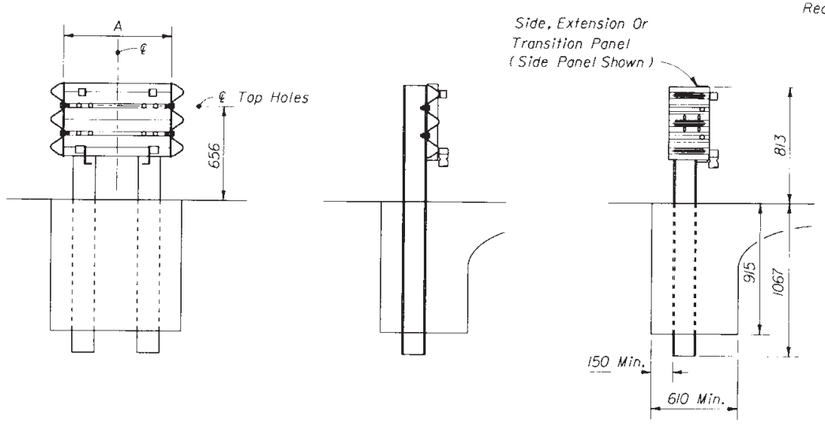

SECTION AA

SECTION BB

SIDE VIEW

WALL DETAILS

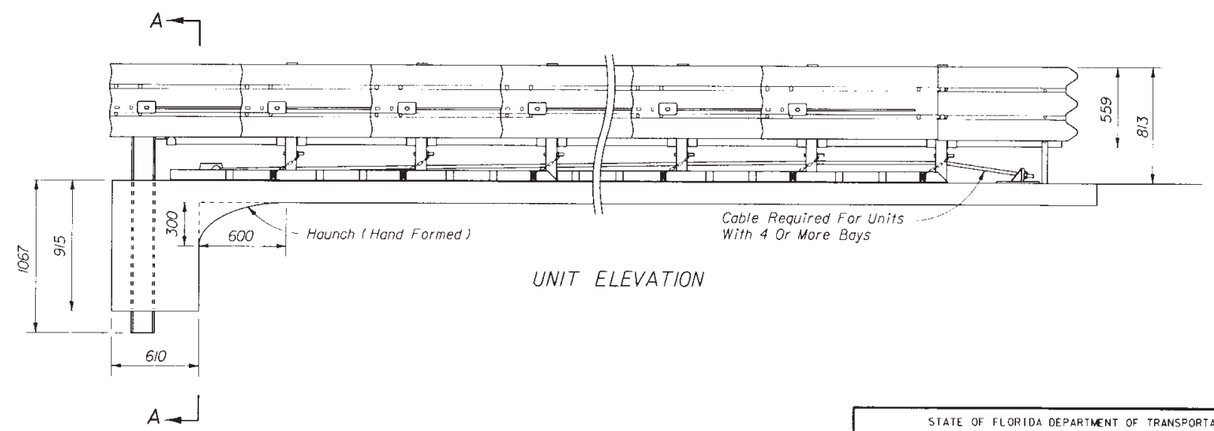

UNIT ELEVATION

NOTES

1. For the number of bays required see table, Sheet 1.
2. See Transition Assembly Features for guardrail connections.
3. For design information see the General Notes.

WIDE FLANGE BACKUP ASSEMBLY

STATE OF FLORIDA DEPARTMENT OF TRANSPORTATION
ROAD DESIGN

G-R-E-A-T SYSTEM

	Names	Dates
Designed By	WFG/JVG	10/91
Drawn By	JBW	10/91
Checked By	JVG/RER	10/91
F.H.W.A. Approved:		

Approved By Freddie Simmons
State Roadway Design Engineer

Revision No.	Sheet No.	Index No.
94	4 of 6	431

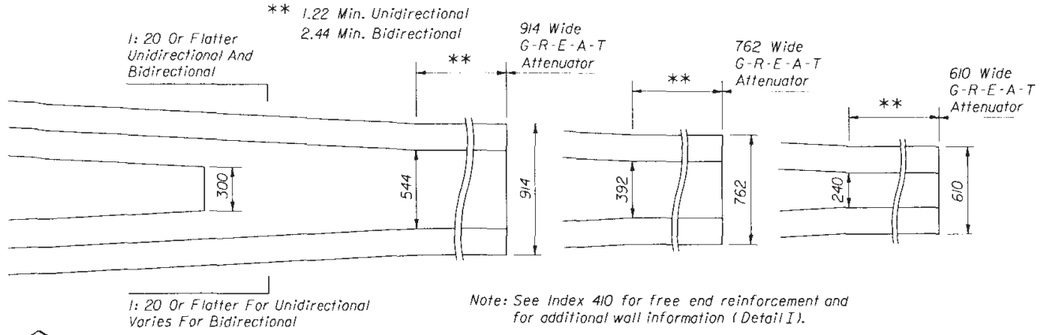

TRANSITIONAL CONCRETE BARRIER WALL BACKUP

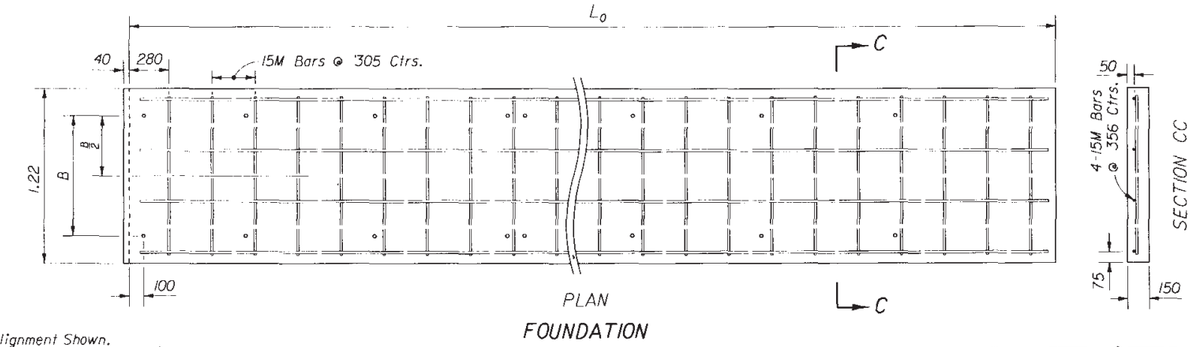

FOUNDATION

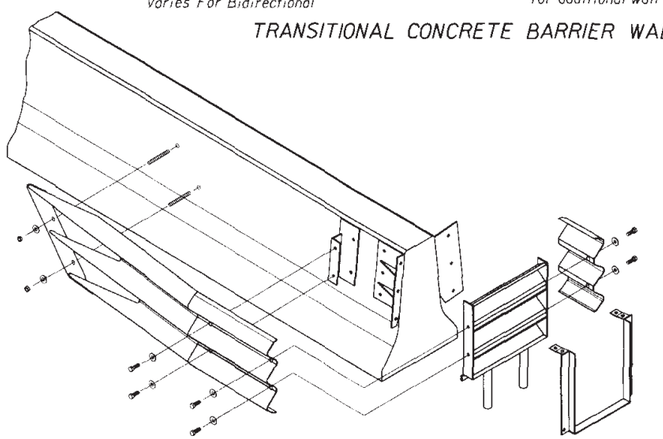

PICTORIAL VIEW

A (mm) (Assembly Width)	B (mm) (Anchor Bolt Ctrs.)
610	686
762	838
914	991

Note: Bolt longitudinal spacing to be in accordance with the manufacturers installation drawings and specifications.

ASSEMBLY LENGTHS		
NO. OF BAYS	L (m) (Bays)	L_0 (m) (Foundation)
1	1.75	1.98
2	2.67	2.90
3	3.58	3.81
4	4.50	4.72
5	5.41	5.64
6	6.32	6.55
8	8.15	8.38
9	9.07	9.30

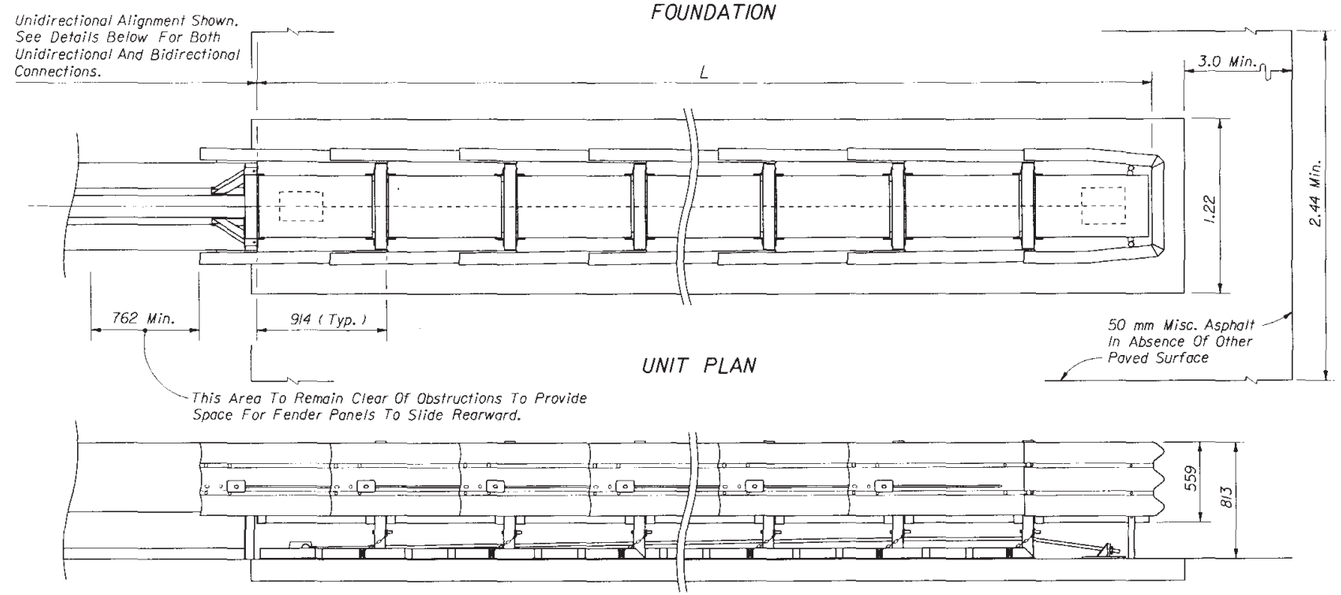

UNIT PLAN

UNIT ELEVATION

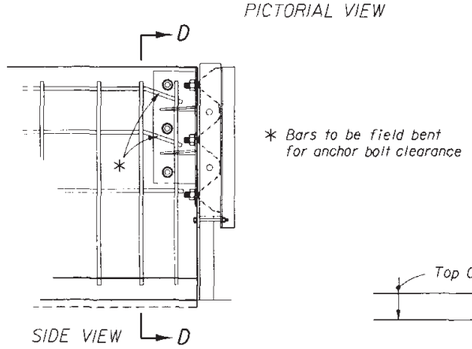

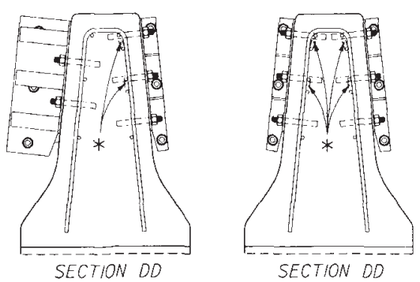

BIDIRECTIONAL UNIDIRECTIONAL

FIELD BENDING OF WALL REINFORCEMENT

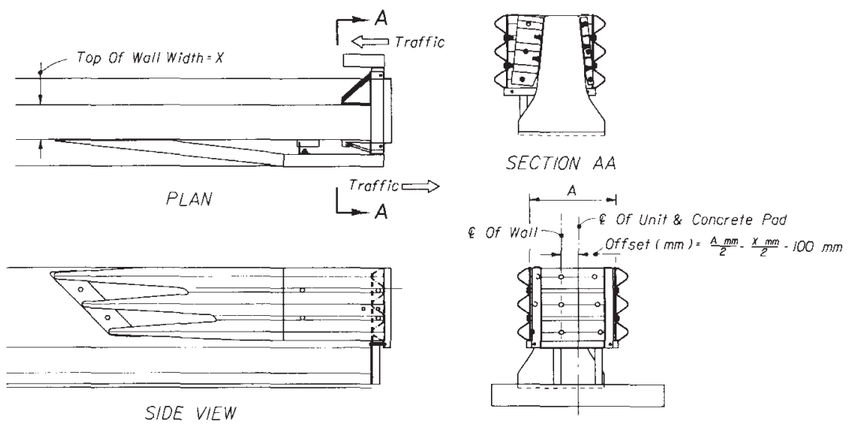

BIDIRECTIONAL

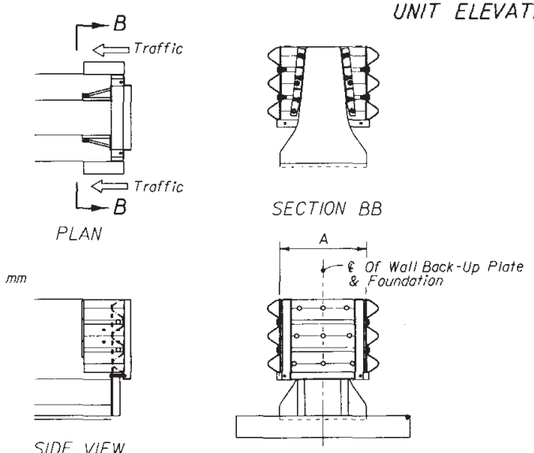

UNIDIRECTIONAL

NOTES

1. This backup assembly applies to single and double face F-Shape and single face New Jersey (NJ) Shape concrete barrier walls (double face F-Shape detailed). Adaptable to single face F-Shape walls by bracket adjustment. See Index No. 410 for barrier wall information.
2. Concrete barrier wall free end reinforcement required with G-R-E-A-T system connection; See Index No. 410.
3. For the number of bays required see table, Sheet 1.
4. For design information see the General Notes.

CONCRETE BARRIER WALL BACKUP ASSEMBLY

STATE OF FLORIDA DEPARTMENT OF TRANSPORTATION
ROAD DESIGN

G-R-E-A-T SYSTEM

	Names	Dates
Designed By	MFG/JVG	10/91
Drawn By	JBW	10/91
Checked By	JVG/RER	10/91
F.H.W.A. Approved:		

Approved By Freddie Simmons
State Roadway Design Engineer

Revision No.	Sheet No.	Index No.
94	5 of 6	431

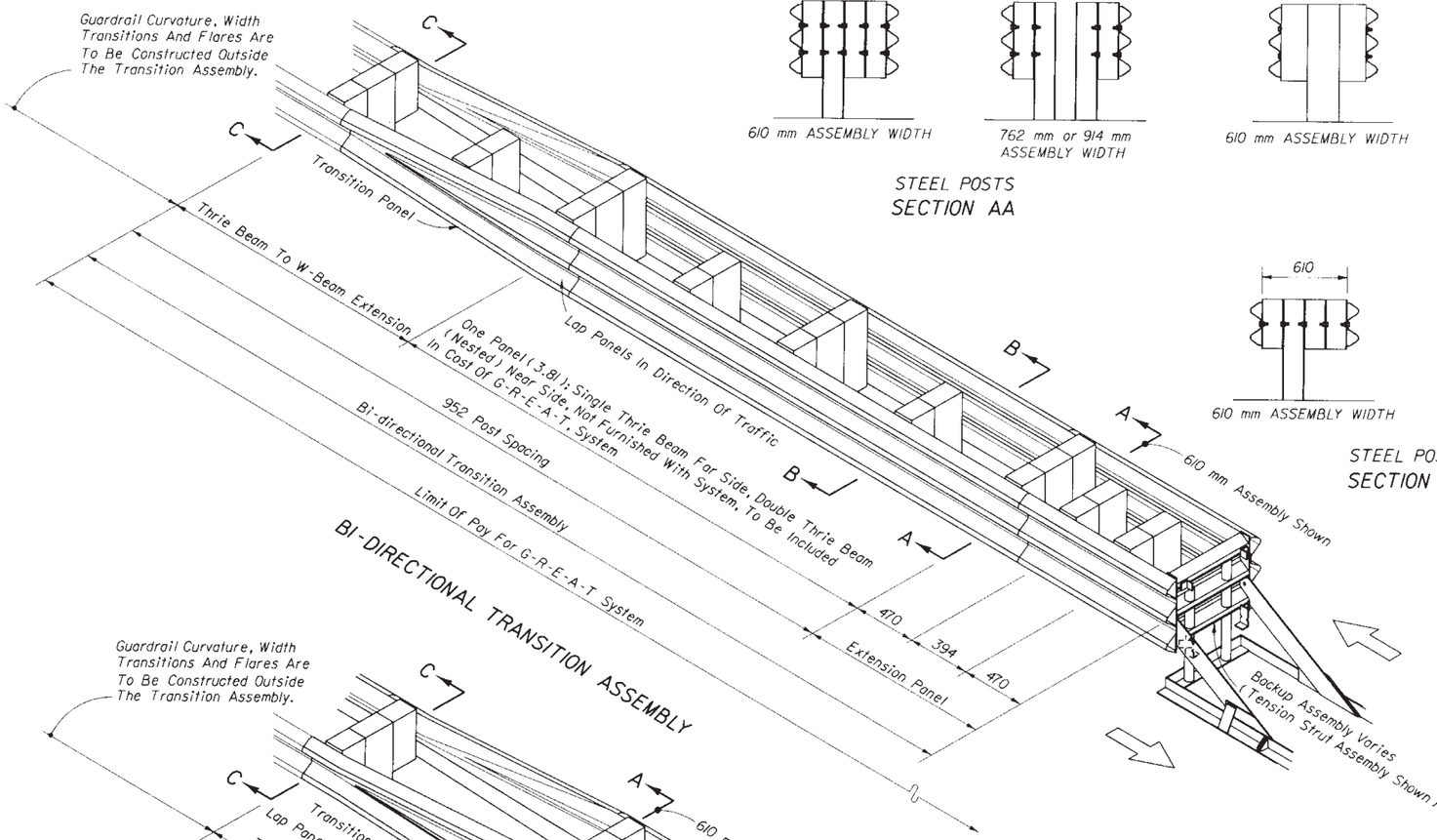

BI-DIRECTIONAL TRANSITION ASSEMBLY

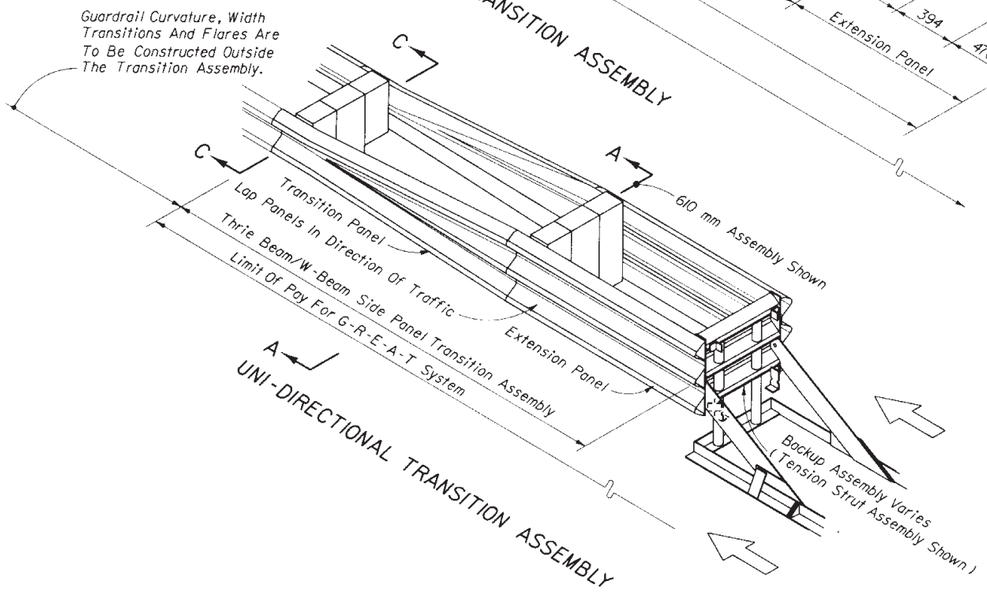

UNI-DIRECTIONAL TRANSITION ASSEMBLY

Note: Steel or timber posts may be used. Wood posts shown.

DOUBLE FACE GUARDRAIL

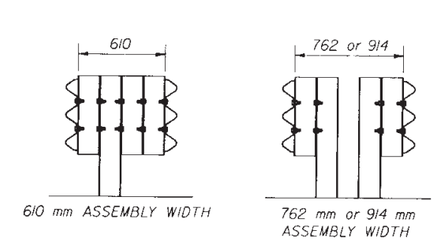

STEEL POSTS
SECTION AA

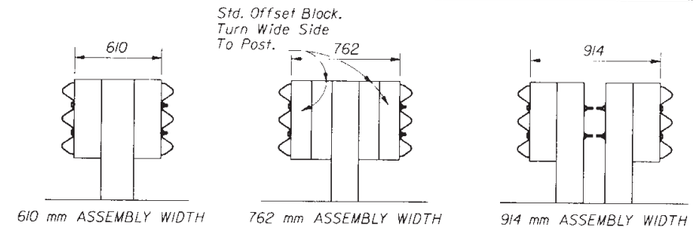

WOOD POSTS
SECTION AA

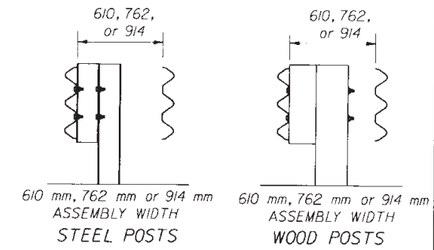

STEEL POSTS WOOD POSTS
SECTION BB

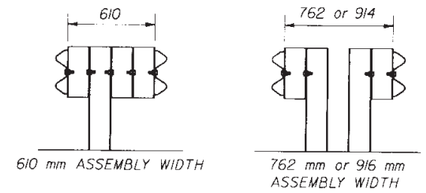

STEEL POSTS
SECTION CC

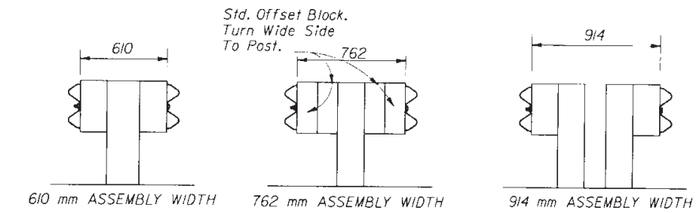

WOOD POSTS
SECTION CC

STEEL POSTS WOOD POSTS
SECTION DD

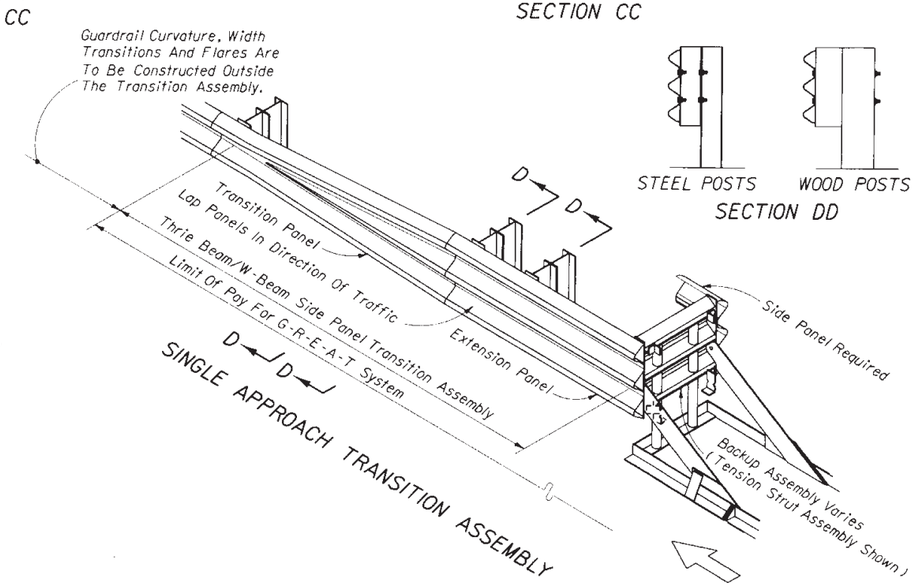

SINGLE APPROACH TRANSITION ASSEMBLY

Note: Steel or timber posts may be used. Steel posts shown. Single face guardrail connection may be right or left side, left side shown.

SINGLE FACE GUARDRAIL

NOTES

1. The Thrie Beam/W-Beam Side Panel Assembly required for all Concrete Backup, Tension Strut Backup and Wide Flange Backup assembly connections to guardrail, unless other connection called for in the plans.
2. For additional information see the General Notes and assembly details.

GUARDRAIL TRANSITION ASSEMBLY FEATURES

STATE OF FLORIDA DEPARTMENT OF TRANSPORTATION
ROAD DESIGN

G-R-E-A-T SYSTEM

	Names	Dates
Designed By	MFG/JVG	10/91
Drawn By	JBW	10/91
Checked By	JVG/RER	10/91

Approved By Freddie Simmons
State Roadway Design Engineer

Revision No.	Sheet No.	Index No.
94	6 of 6	431

F.H.W.A. Approved:

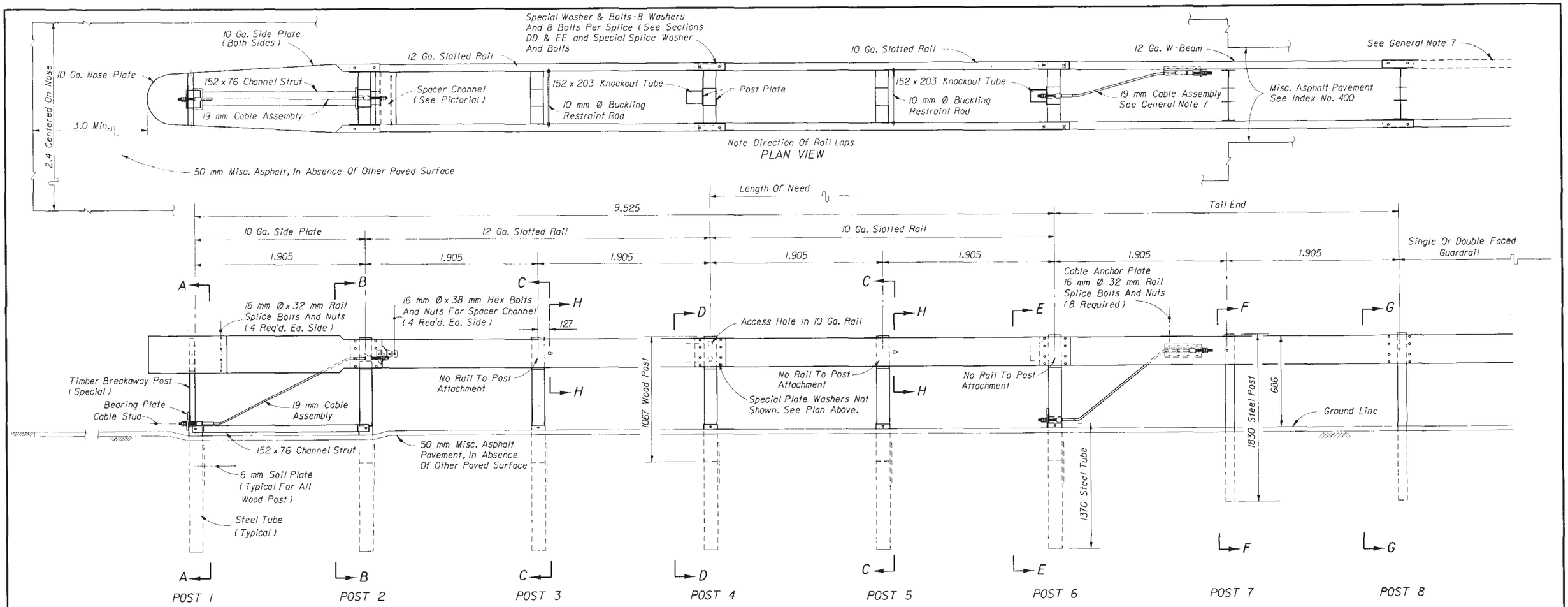

GENERAL NOTES

1. The energy absorbing system represented on this standard drawing is a proprietary design by SYRO Steel Company and marketed under the trade name C-A-T, short for Crash Cushion/Attenuating Terminal. Any infringement on the rights of the designer shall be the sole responsibility of the user.

2. This standard drawing is produced by the Florida Department Of Transportation solely for use by the Department and its assignees. This standard drawing provides the general graphics and information necessary to field identify component parts of the C-A-T system and their incorporation into a whole system.

3. This standard drawing is sufficient for plan details for the C-A-T system installed in connection with standard single and double faced W-beam guardrail systems, and precludes the requirement for shop drawing submittals unless the plans otherwise call for such submittals.

4. The C-A-T system shall be assembled and installed in accordance with the manufacturers detailed drawings, procedures and specifications.

5. The C-A-T system shall be constructed only on slopes 10:1 or flatter.

6. The C-A-T system shall not be located closer than 3.3 m to any traffic lane.

7. The 'tail end' section represented on this drawing applies to connections with single and double faced guardrail. The cable anchorage at Post No. 6 is to be used with single faced guardrail connections only.

   Where the C-A-T system is installed in conjunction with a rigid structure, a guardrail transition section shall be constructed between the C-A-T system and the structure connection. The transition sections shown on Indexes 400 and 410 shall be constructed for connections to bridge concrete traffic rails and roadway concrete barrier walls; transition sections for connections to other rigid structures shall be as detailed in the plans and/or as approved by shop drawings.

8. Metallic components shall meet the galvanizing requirements for guardrail, Index No. 400.

9. The C-A-T system for single and double faced guardrail applications will be paid for the under the contract unit price for Impact Attenuator Vehicular (CAT), Each.

DESIGN NOTES AND GUIDELINES

1. The C-A-T system is designed to cushion automobile end-on hits and to redirect automobiles from side hits when impacting at speeds up to and including 100 km/h. The C-A-T unit has a singular design for all speeds of 100 km/h or less, and any adjustment to its design will not be permitted except as authorized by the manufacturer.

2. The C-A-T system is not intended for use in gores of freeway and expressway mainline ramp terminals; gores of roadway forks; or other gore locations where there is a history of high frequency vehicle departure from the roadway or the potential exists for such departures. The C-A-T system is not a restorable design and therefore requires complete replacement after having sustained either an end-on or a side vehicular impact. Deformed side rail elements that will inhibit the shearing of lands between the rail slots will be subfunctional and are to be replaced immediately; deformed elements are not to be refurbished for reuse.

3. Currently the Department does not recognize other proprietary items as being equally suitable alternatives to the C-A-T, and until such alternatives are available, the C-A-T need not be bid against other proprietary items.

STATE OF FLORIDA DEPARTMENT OF TRANSPORTATION
ROAD DESIGN

C-A-T SYSTEM

	Names	Dates
Designed By	MFG/JNG	7/91
Drawn By	HSD	7/91
Checked By	JNG/RER	7/91

F.H.W.A. Approved:

Approved By Freddie Simmons
State Roadway Design Engineer

Revision No.	Sheet No.	Index No.
94	1 of 2	432

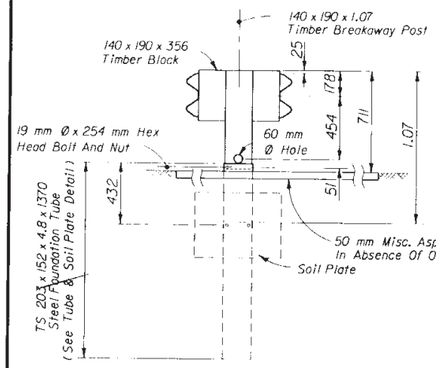

TYPICAL DIMENSIONING

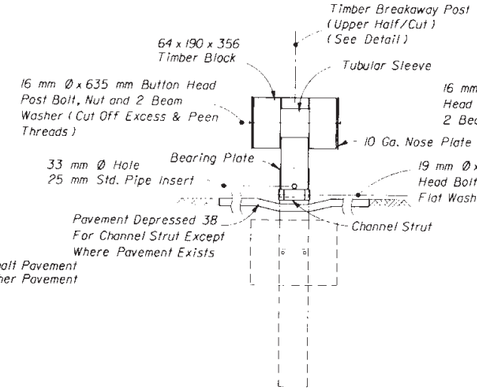

SECTION AA
POST NO. 1

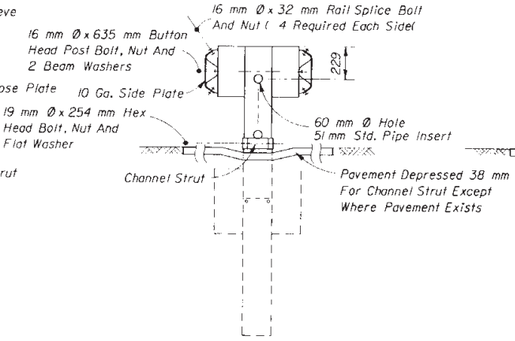

SECTION BB
POST NO. 2

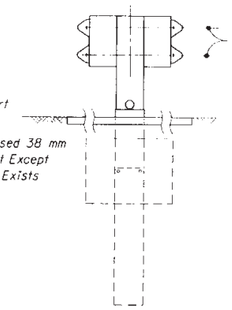

SECTION CC
POST 3 & 5

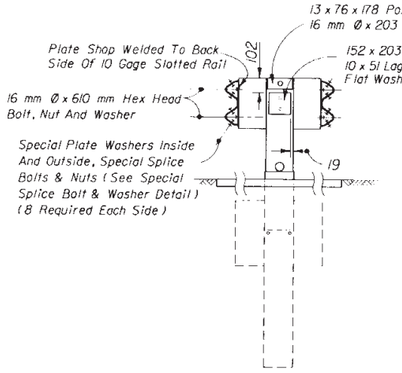

SECTION DD
POST NO. 4

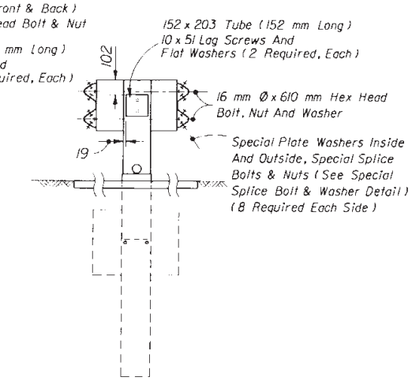

SECTION EE
POST NO. 6

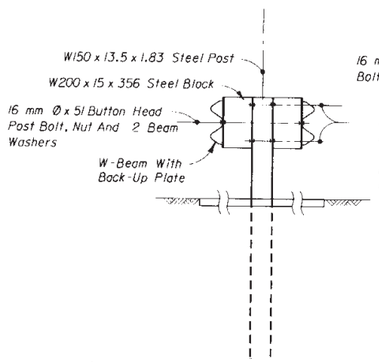

SECTION FF
POST NO. 7

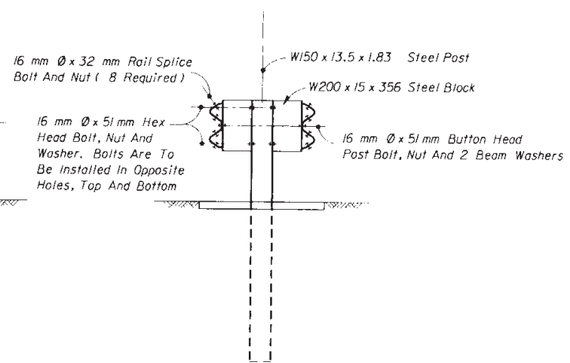

SECTION GG
POST NO. 8

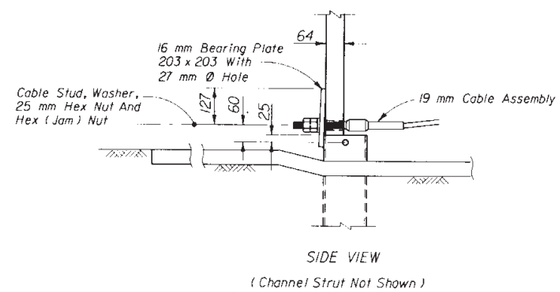

SIDE VIEW
(Channel Strut Not Shown)
CABLE-LOWER ASSEMBLY
POST NO. 1

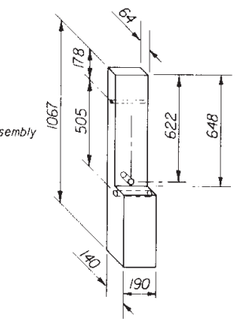

OBLIQUE VIEW-BACK VIEW
POST NO. 1

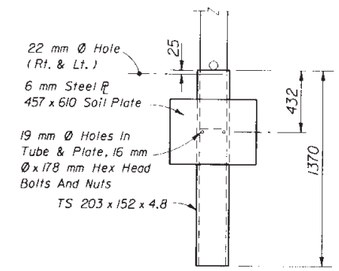

FOUNDATION TUBE AND
SOIL PLATE

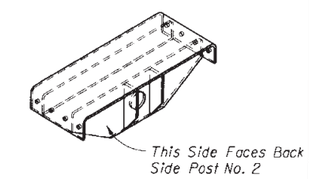

PICTORIAL VIEW
SPACER CHANNEL

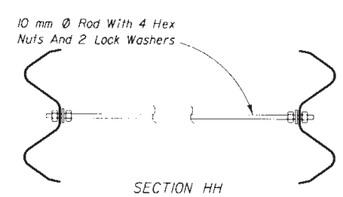

SECTION HH
BUCKLING RESTRAINT ROD

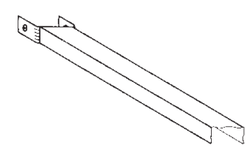

OBLIQUE HALF SECTION
152 x 76 CHANNEL STRUT

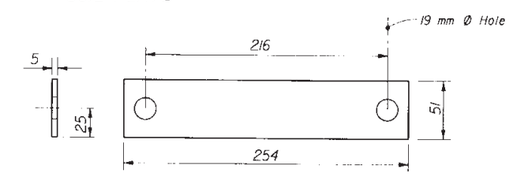

SPECIAL PLATE WASHER

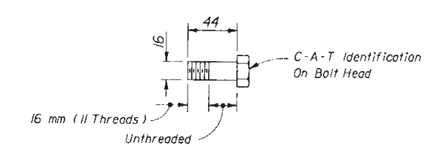

SPECIAL HEX HEAD BOLT
SPECIAL PLATE WASHER AND SPLICE BOLT

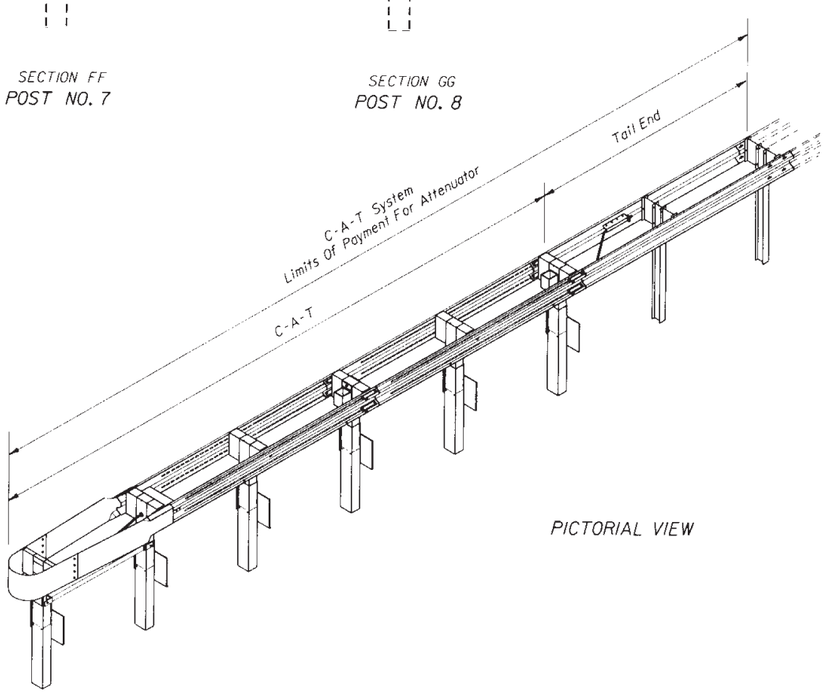

PICTORIAL VIEW

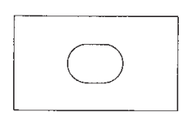

See Index No. 400 For Details
BEAM WASHER

STATE OF FLORIDA DEPARTMENT OF TRANSPORTATION
ROAD DESIGN

C-A-T SYSTEM

	Names	Dates
Designed By	MFG/JVG	7/91
Drawn By	HSD	7/91
Checked By	JVG/RER	7/91

Approved By Freddie Simmons
State Roadway Design Engineer

Revision No.	Sheet No.	Index No.
94	2 of 2	432

F.H.W.A. Approved:

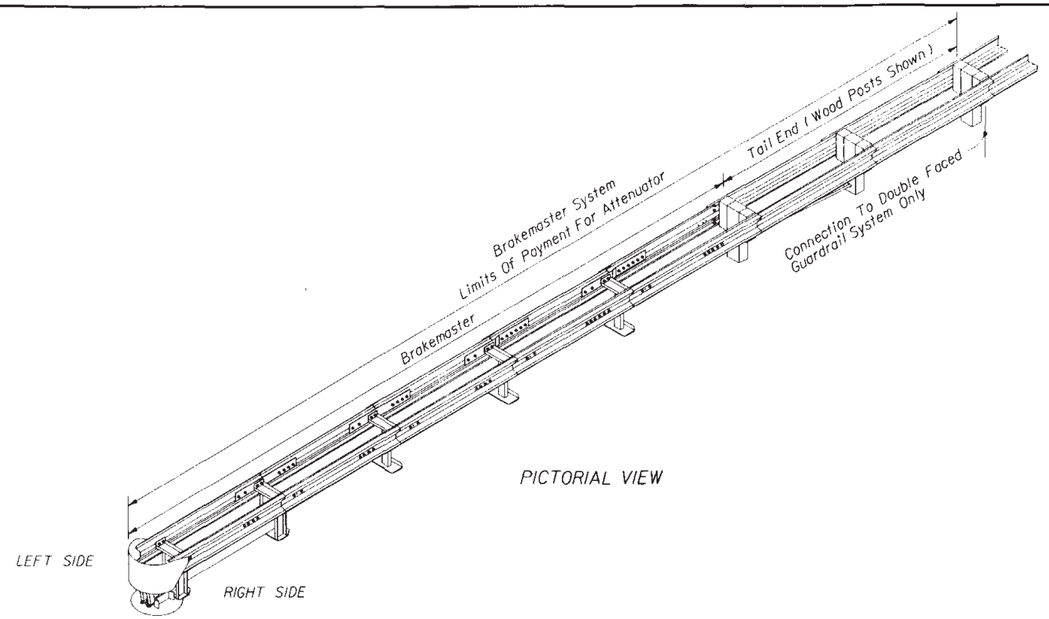

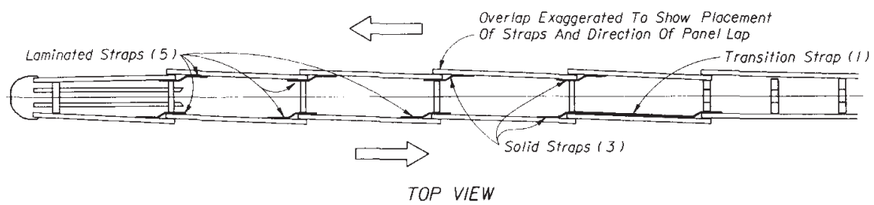

BIDIRECTIONAL SYSTEM

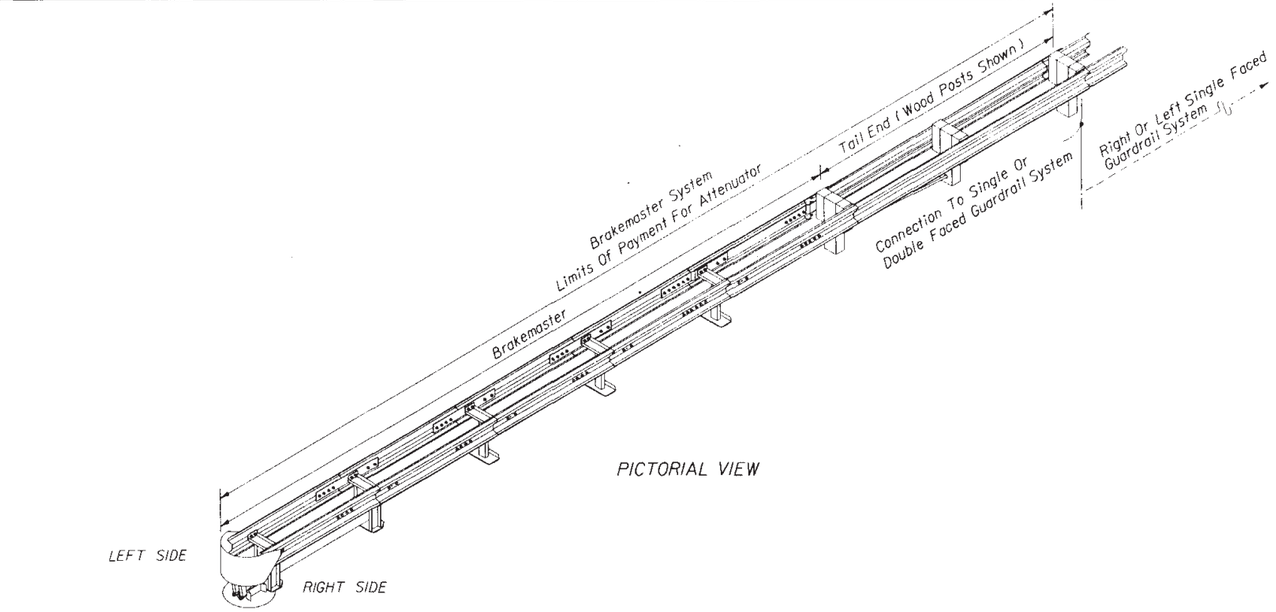

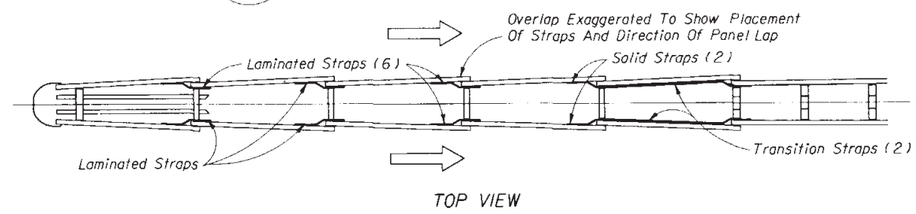

UNIDIRECTIONAL SYSTEM

GENERAL NOTES

1. The energy absorbing system represented on this standard drawing is a proprietary design by Energy Absorption Systems, Inc. and marketed under the trade name Brakemaster. Any infringement on the rights of the designer shall be the sole responsibility of the user.

2. This standard drawing is produced by the Florida Department Of Transportation solely for use by the Department and its assignees. This standard drawing provides the general information and graphics necessary to field identify component parts of the Brakemaster system and their incorporation into a whole system.

3. This standard drawing is sufficient for plan details for the Brakemaster system installed in connection with standard single and double faced W-beam guardrail systems, and precludes the requirement for shop drawing submittals unless the plans otherwise call for such submittals.

4. The Brakemaster system shall be assembled and installed in accordance with the manufacturers detailed drawings, procedures and specifications.

5. The Brakemaster system shall be constructed only on slopes 1: 12 or flatter.

6. The Brakemaster system shall not be located closer than 3.3 meters to any traffic lane.

7. The 'tail end' section represented on this drawing applies to connections with single and double faced guardrail. Where the Brakemaster system is installed in conjunction with safety shaped or vertical faced barrier walls or other rigid structures, a special transitional guardrail section between the Brakemaster and wall or structure shall be as detailed on Index No. 410 or as approved by shop drawings.

8. Metallic components shall meet the galvanizing requirements for guardrail, Index No. 400.

9. The Brakemaster system will be paid for under the contract unit price for Impact Attenuator Vehicular (Brakemaster), Each.

DESIGN NOTES AND GUIDELINES

1. The Brakemaster system is designed to cushion automobile end-on hits and to redirect automobiles from side hits when impacting at speeds up to and including 100 km/h. The Brakemaster unit has a singular design for all speeds of 100 km/h or less, and any adjustment to its design will not be permitted except as authorized by the manufacturer.

2. The Brakemaster system is specially designed to shield both narrow hazards and the ends of other fixed barriers located in low frequency impact areas. The Brakemaster system is not intended for use in gores of freeways and expressway mainline ramp terminals; gores of roadway forks; and, other gore locations where there is a history of high frequency vehicle departures from the roadway or the potential exists for such departures. The Brakemaster system is not a restorable design and therefore requires complete replacement after having sustained either an end-on or a side vehicular impact. Deformed side rail elements of the Brakemaster will be subfunctional and are to be replaced immediately; deformed elements are not to be refurbished for reuse. When replacing an impacted Brakemaster system the cable/brake assembly is not to be reused, if the cable sleeve is exposed. After vehicle impact on the Brakemaster system the cable/brake assembly can be returned to the manufacturer for credit toward replacement of the cable.

3. Currently the Department does not recognize other proprietary items as being equally suitable alternatives to the Brakemaster, and until such alternatives are available, the Brakemaster need not be bid against other proprietary items.

STATE OF FLORIDA DEPARTMENT OF TRANSPORTATION
ROAD DESIGN

BRAKEMASTER

	Names	Dates
Designed By	MFG/JVG	7/91
Drawn By	HSD	7/91
Checked By	JVG	7/91
F.H.W.A. Approved:		

Approved By Freddie Simmons
State Roadway Design Engineer

Revision No.	Sheet No.	Index No.
94	1 of 4	433

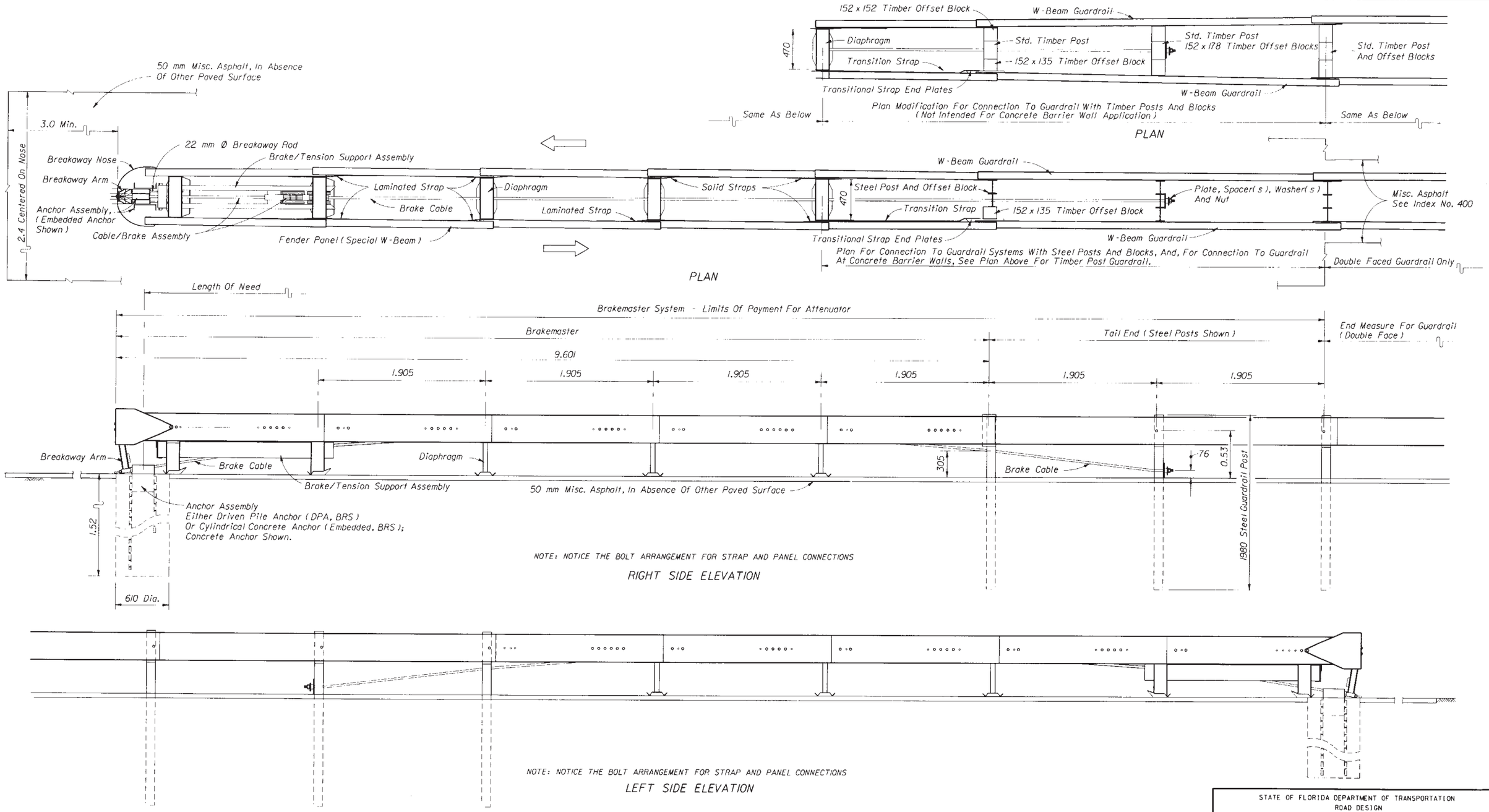

BIDIRECTIONAL SYSTEM

STATE OF FLORIDA DEPARTMENT OF TRANSPORTATION
ROAD DESIGN

BRAKEMASTER

	Names	Dates
Designed By	MFG/JVG	7/91
Drawn By	HSD	7/91
Checked By	JVG	7/91
F.H.W.A. Approved:		

Approved By Freddie Simmons
State Roadway Design Engineer

Revision No.	Sheet No.	Index No.
94	2 of 4	433

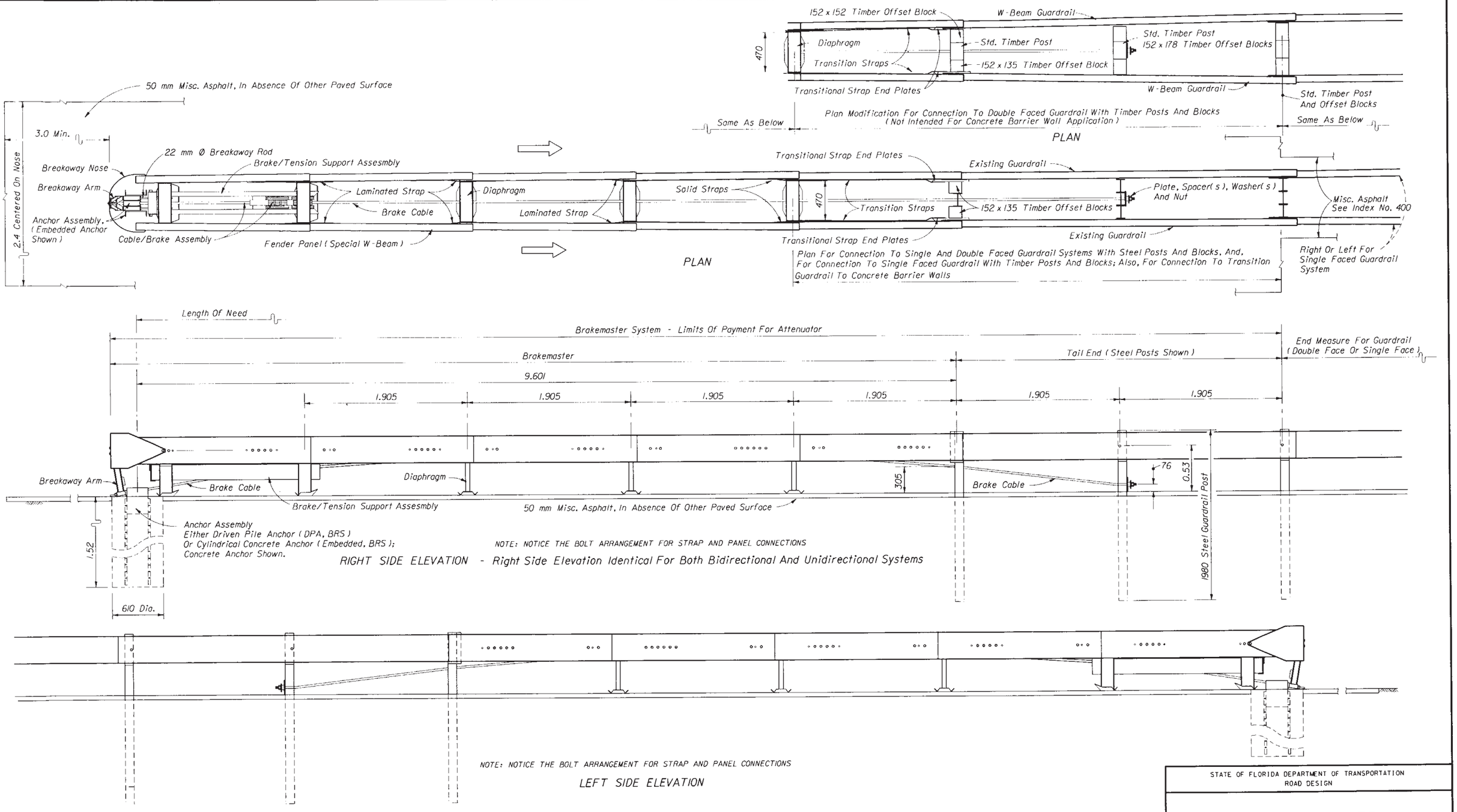

UNIDIRECTIONAL SYSTEM

STATE OF FLORIDA DEPARTMENT OF TRANSPORTATION
ROAD DESIGN

BRAKEMASTER

	Names	Dates
Designed By	MFG/JVG	7/91
Drawn By	HSD	7/91
Checked By	JVG	7/91

F.H.W.A. Approved:

Approved By Freddie Simmons
State Roadway Design Engineer

Revision No.	Sheet No.	Index No.
94	3 of 4	433

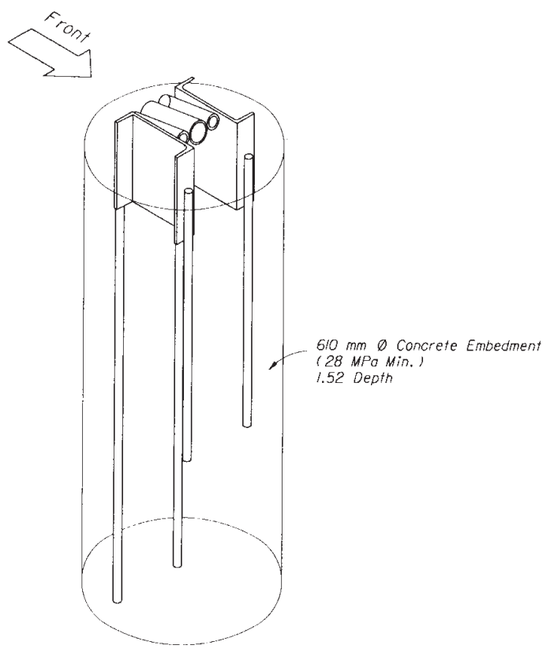

ISOMETRIC VIEW

ANCHOR ASSEMBLY, EMBEDDED BRS

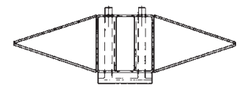

TOP VIEW

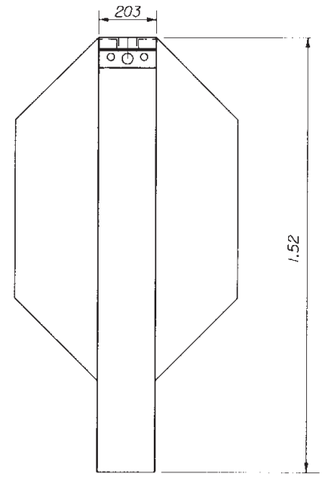

FRONT VIEW

SIDE VIEW

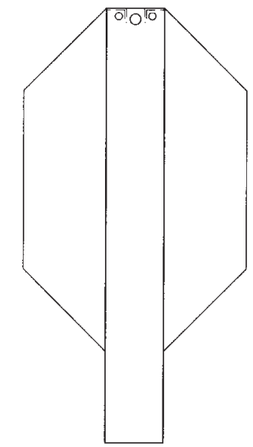

BACK VIEW

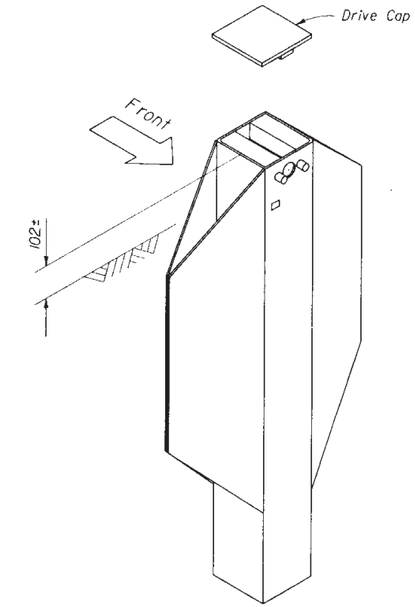

ISOMETRIC VIEW

Note: This assembly is driven into 203 mm Ø 1.52 mm deep pilot hole by drive cap furnished.

ANCHOR ASSEMBLY, DPA BRS

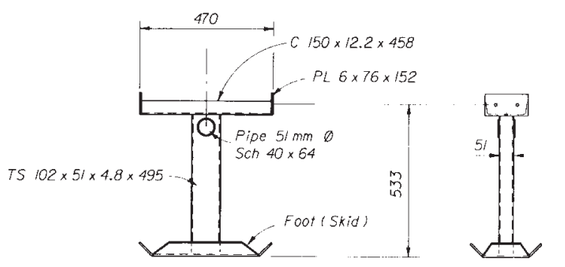

FRONT VIEW

SIDE VIEW

DIAPHRAGM, BRS

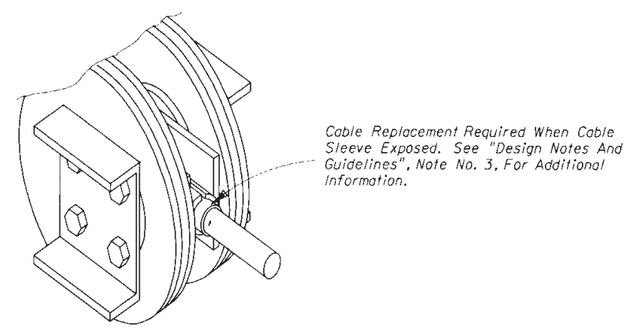

BRAKE/CABLE REPLACEMENT

STATE OF FLORIDA DEPARTMENT OF TRANSPORTATION
ROAD DESIGN

BRAKEMASTER

	Names	Dates
Designed By	MFG/JVG	7/91
Drawn By	HSD	7/91
Checked By	JVG	7/91

Approved By Freddie Simmons
State Roadway Design Engineer

F.H.W.A. Approved:	Revision No.	Sheet No.	Index No.
	94	4 of 4	433

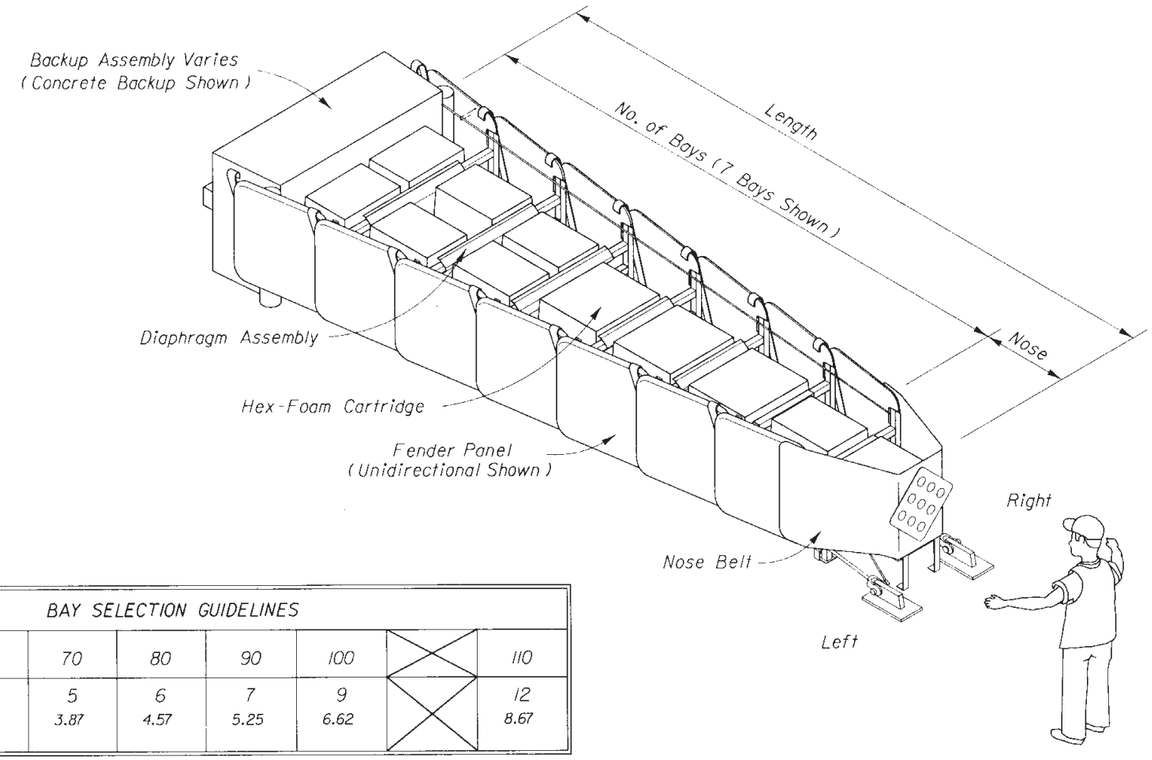

BAY SELECTION GUIDELINES							
DESIGN SPEED km/h	60	70	80	90	100		110
NO. OF BAYS (Nominal Length) (m)	4 3.19	5 3.87	6 4.57	7 5.25	9 6.62		12 8.67

HEX-FOAM CARTRIDGE SELECTION CHART													
Attenuator Type	Cartridge Type												
	Nose	Bay 1	Bay 2	Bay 3	Bay 4	Bay 5	Bay 6	Bay 7	Bay 8	Bay 9	Bay 10	Bay 11	Bay 12
4 Bay Narrow	80	80	80	80	81								
4 Bay Medium	80	80	82	(80)	(81)								
4 Bay Wide	80	80	82	(80)	(81)								
5 Bay Narrow	80	80	80	80	82	81							
5 Bay Medium	80	80	82	(80)	(80)	(81)							
5 Bay Wide	80	80	82	(80)	(80)	(81)							
6 Bay Narrow	80	80	80	80	80	82	81						
6 Bay Medium	80	80	82	82	(80)	(80)	(81)						
6 Bay Wide	80	80	82	82	(80)	(80)	(81)						
7 Bay Narrow	80	80	80	80	80	80	82	81					
7 Bay Medium	80	80	82	82	82	(80)	(80)	(81)					
7 Bay Wide	80	80	82	82	82	(80)	(80)	(81)					
9 Bay Narrow	80	80	80	80	80	80	80	80	82	81			
9 Bay Medium	80	80	82	82	82	82	(80)	(80)	(80)	(81)			
9 Bay Wide	80	80	82	82	82	82	(80)	(82)	(82)	(81)			
12 Bay Narrow	80	80	80	80	80	80	80	80	80	82	82	82	81
12 Bay Medium	80	80	80	82	82	82	82	82	(80)	(80)	(80)	(80)	(81)
12 Bay Wide	80	80	82	82	82	82	82	82	(80)	(80)	(82)	(82)	(81)

1. Parentheses ( ) denote double cartridge bays.
2. Type 80 - 432 Wide x 610 Long (Part no. 3509801-0000)
   Type 81 - 610 Wide x 432 Long (Part no. 3509811-0000)
   Type 82 - 660 Wide x 610 Long (Part no. 3509821-0000)

INDEX OF SHEETS

SHEET NO.	DESCRIPTION
1	General System Features And Bay Selection Guidelines
2	Concrete Backup Assembly
3	Diagonal Braced Backup Assembly
4	Horizontal Braced Backup Assembly
5	Wide Flange Backup Assembly
6	Transition Sections

GENERAL NOTES

1. The energy absorbing system represented on this standard drawing is a proprietary design by Energy Absorption Systems, Inc. and marketed under the trade name Hex-Foam (TM) Sandwich System. Any infringement on the rights of the designer shall be the sole responsibility of the user.
2. This standard drawing is produced by the Florida Department Of Transportation solely for use by the Department and its assignees. This standard drawing provides the general graphics and information necessary to field identify component parts of the Hex-Foam Sandwich System and their incorporation into a whole system.
3. This standard drawing is sufficient for plan details for the Hex-Foam Sandwich System installed as a free standing system or installed in connection with concrete barrier walls and other fixed barrier systems, and precludes the requirement for shop drawing submittals unless the plans otherwise call for such submittals. For unusual situations such as cross slopes exceeding 1: 20 (0.05), expansion joints, drainage, deck structures, or extra wide hazards, Energy Absorption Systems, Inc. provides a free application service to ensure proper use of the system.
4. The Hex-Foam Sandwich System shall be assembled and installed in accordance with the manufacturers detailed drawings, procedures and specifications.
5. The standard Hex-Foam Sandwich System is available in 3 standard widths protecting hazards up to 2.13 m wide. Each of these widths can be matched to any of the four backup assemblies shown in this index. The four backup assemblies are to be utilized as follows:
   (a) Independent systems:
      (1) Concrete backup assemblies.
      (2) Diagonal braced backup assemblies.
      (3) Wide flange backup assemblies.
   (b) Dependent systems:
      (1) Horizontal braced backup assemblies.
   (c) Combination systems:
      (1) Concrete backup assemblies.
   Variations from the uses described above shall be constructed as detailed in the plans and/or as required by shop drawings.
6. Only the Hex-Foam cartridges shall be used in all bays and the nose section.
7. Concrete foundations and backup blocks shall be constructed with 28 MPa min. compressive strength concrete.
8. The Hex-Foam Sandwich System can be constructed on cross slopes 1: 20 or flatter without compensating alterations.
9. All metallic components shall meet the galvanizing requirements for guardrail, Index No. 400.
10. Fittings, hardware, anchorages and accessories not labeled or described in these details are items furnished by the manufacturer/supplier and are to be installed in accordance to the manufacturers instructional drawings and specifications.
11. The Hex-Foam Sandwich System will be paid for under the contract unit price for Impact Attenuator Vehicular (Hex-Foam), EA.

DESIGN NOTES AND GUIDELINES

1. The Hex-Foam Sandwich System is designed to cushion automobile end-on hits and to redirect automobiles from side hits. The standard width Hex-Foam Sandwich System is designed to shield fixed hazards (up to 2.13 m wide) or the ends of other fixed barrier systems. The number of bays to be used in a specific unit will be determined by the design speed, except where the Engineer determines that another speed is more applicable. The unit width will be determined by the width of the object to be shielded or by the connecting barrier system. The backup assembly for a specific unit will be determined by either (a) the unit standing free of the object to be shielded or (b) the hazard or barrier system(s) to which it is connected. The order of priority for backup assembly selection is as follows:
   (a) Free standing:
      (1) Concrete backup assemblies.
      (2) Diagonal braced backup assemblies.
      (3) Wide flange backup assemblies.
   (b) Connections to concrete barrier systems:
      (1) Concrete backup assemblies.
      (2) Horizontal braced backup assemblies.
   (c) Connections to guardrail systems:
      (1) Concrete backup assemblies.
      (2) Diagonal braced backup assemblies.
      (3) Wide flange backup assemblies.
2. The Hex-Foam Sandwich System is a restorable system that is particularly suited to shielding wide (≥ 0.91 m) hazards subject to high speed traffic, high volume traffic, and/or traffic with a history of frequent errant vehicle departures from the roadway or the potential exists for such departures. The Hex-Foam Sandwich System is particularly suited to shielding hazards where the approach space is limited; and, is particularly suited to conditions where the terminal must be located close to the traffic lane. For unusual situations see General Note No. 3.
3. The Hex-Foam G-R-E-A-T System has Department established priority over the narrow Hex-Foam Sandwich System, and the G-R-E-A-T System is to be used unless the plans specifically call for the Hex-Foam Sandwich System. Currently the Department does not recognize other proprietary items as being equally suitable alternatives to the medium and wide Hex-Foam Sandwich Systems, and until such alternatives are available, the medium and wide Hex-Foam Sandwich Systems need not be bid against other proprietary items.

STATE OF FLORIDA DEPARTMENT OF TRANSPORTATION
ROAD DESIGN

HEX-FOAM SANDWICH SYSTEM

	Names	Dates
Designed By	MFG/JVG	2/93
Drawn By	HKH	2/93
Checked By	JVG	2/93

Approved By Freddie Simmons
State Roadway Design Engineer

Revision No.	Sheet No.	Index No.
94	1 of 6	437

F.H.W.A. Approved:

GENERAL SYSTEM FEATURES AND BAY SELECTION GUIDELINES

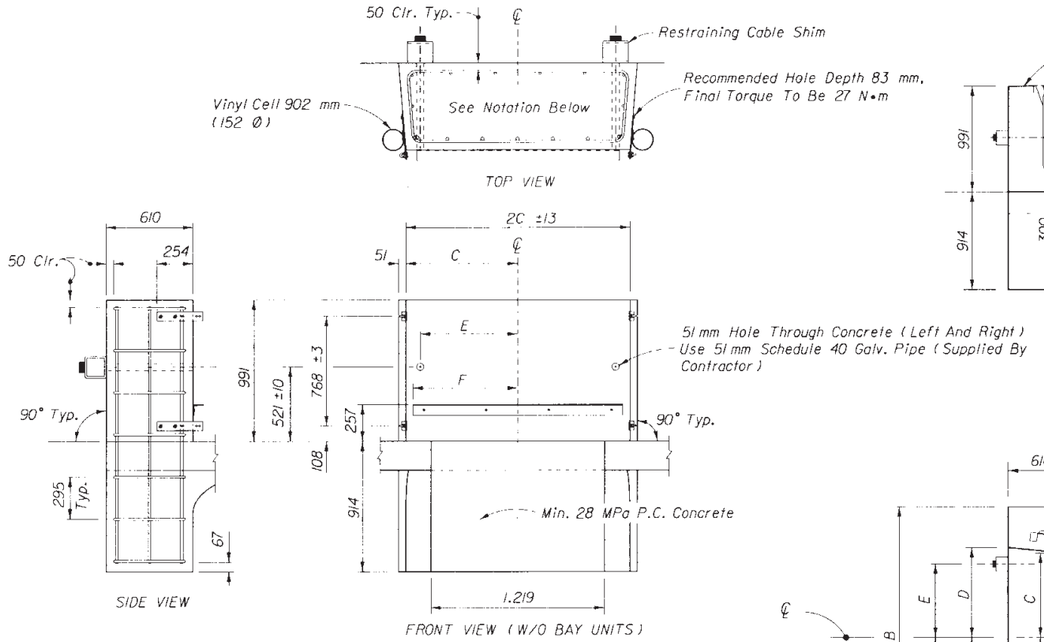

All concrete backup walls will be constructed with 7-20M vertical reinforcing bars equally spaced across front face of the wall. All other backup wall reinforcing will be 15M. Narrow, medium and wide units will be constructed with 5, 6 and 9 equally spaced vertical bars along the back face of the wall respectively. All other reinforcing bars shall be constructed as shown.
Field bend vertical reinforcing steel to clear Schedule 40 pipe.
All exposed backup block edges shall be chamfered 19 mm.

BACKUP ASSEMBLY - UNIDIRECTIONAL

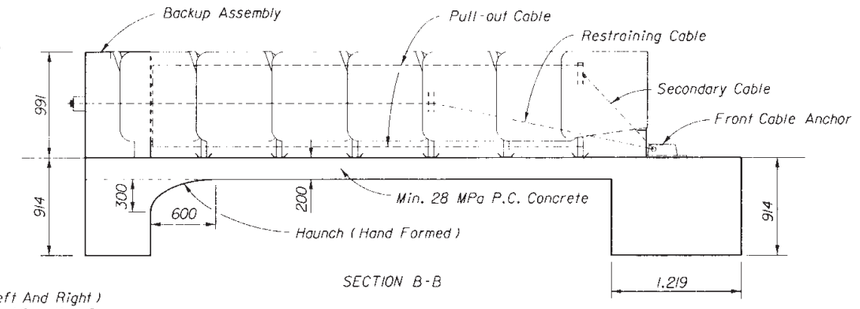

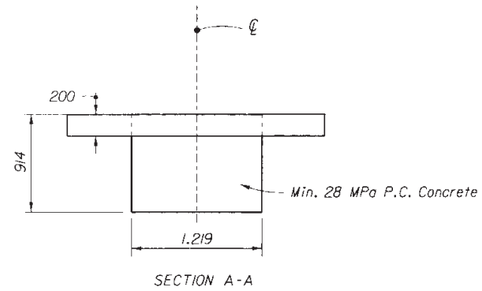

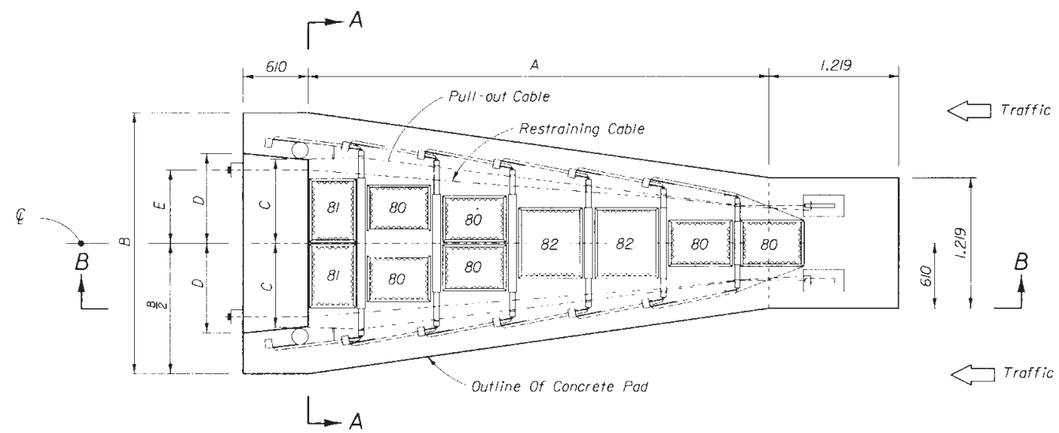

PLAN - UNIDIRECTIONAL UNIT (6 BAY UNIT SHOWN)

SUPPLEMENTAL DIMENSIONS						
NO. OF BAYS	A	B	C	D	E	F
4 Bays	2.946	1.829	510	561	410	360
		2.438	787	838	686	740
		3.048	1143	1194	641	1070
5 Bays	3.632	1.829	510	561	410	360
		2.438	787	838	686	740
		3.048	1143	1194	641	1070
6 Bays	4.318	1.829	510	561	410	360
		2.438	787	838	686	740
		3.048	1143	1194	699	1070
7 Bays	5.004	1.829	510	561	410	360
		2.438	787	838	686	740
		3.048	1143	1194	762	1070
9 Bays	6.375	1.829	510	561	410	360
		2.438	787	838	686	740
		3.048	1143	1194	832	1070
12 Bays	8.433	1.829	510	561	410	360
		2.438	787	838	686	740
		3.048	1143	1194	832	1070

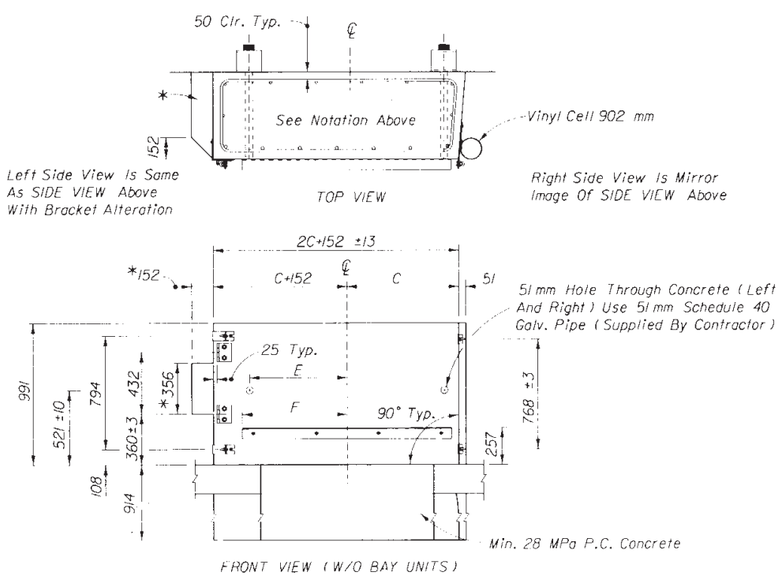

For reinforcement and chamfers see notation above.

BACKUP ASSEMBLY - BIDIRECTIONAL

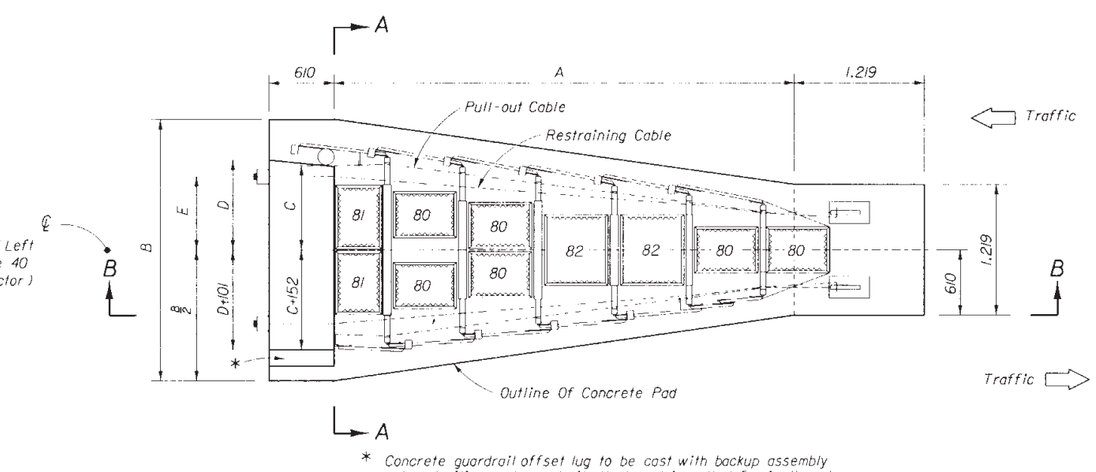

* Concrete guardrail offset lug to be cast with backup assembly when trailing end guardrail attachment is called for in the plans.

PLAN - BIDIRECTIONAL UNIT (6 BAY UNIT SHOWN)

CONCRETE BACKUP ASSEMBLY

STATE OF FLORIDA DEPARTMENT OF TRANSPORTATION
ROAD DESIGN

HEX-FOAM SANDWICH SYSTEM

	Names	Dates
Designed By	MFG/HKH	2/93
Drawn By	HKH	2/93
Checked By	JVG	2/93

Approved By Freddie Simmons
State Roadway Design Engineer

F.H.W.A. Approved:	Revision No.	Sheet No.	Index No.
	94	2 of 6	437

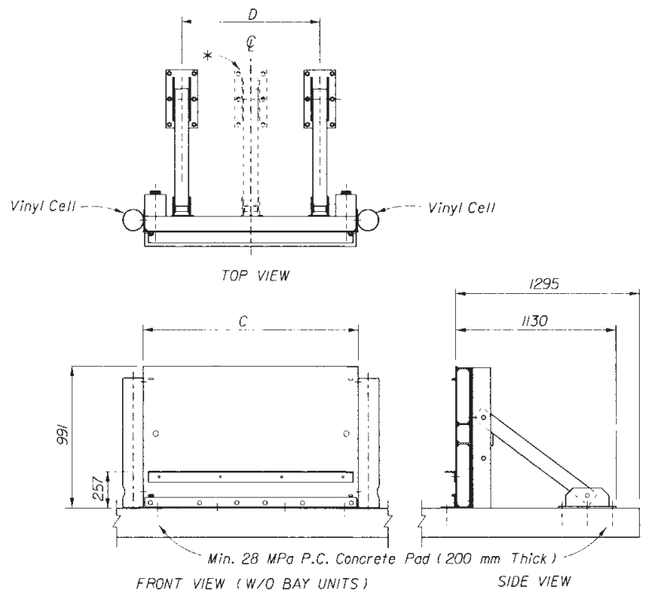

BACKUP ASSEMBLY - UNIDIRECTIONAL

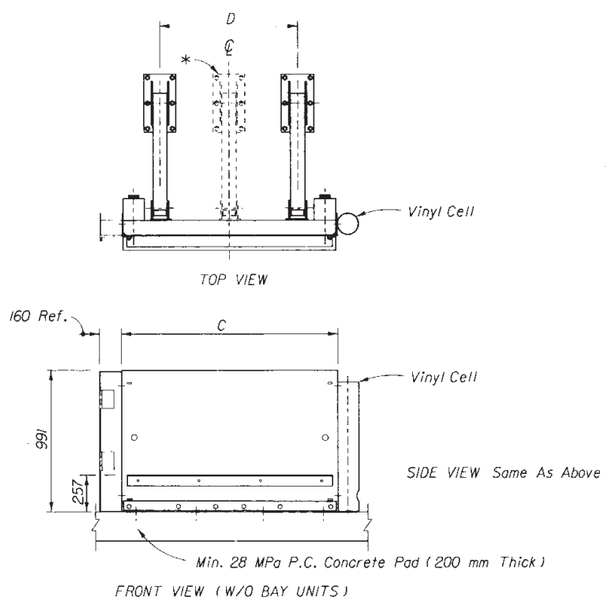

BACKUP ASSEMBLY - BIDIRECTIONAL

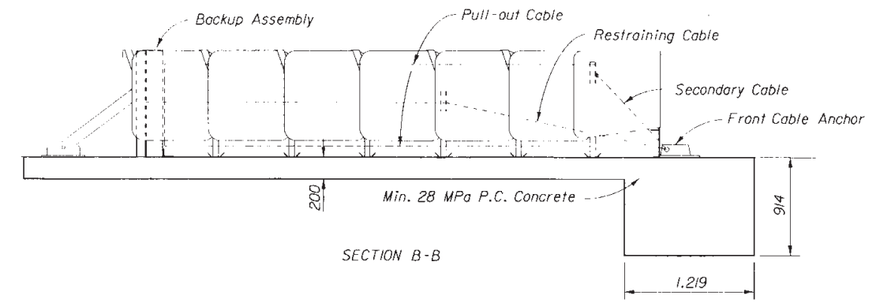

SECTION B-B

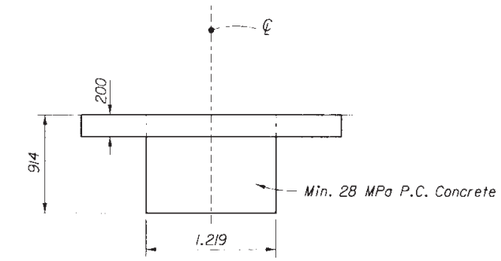

SECTION A-A

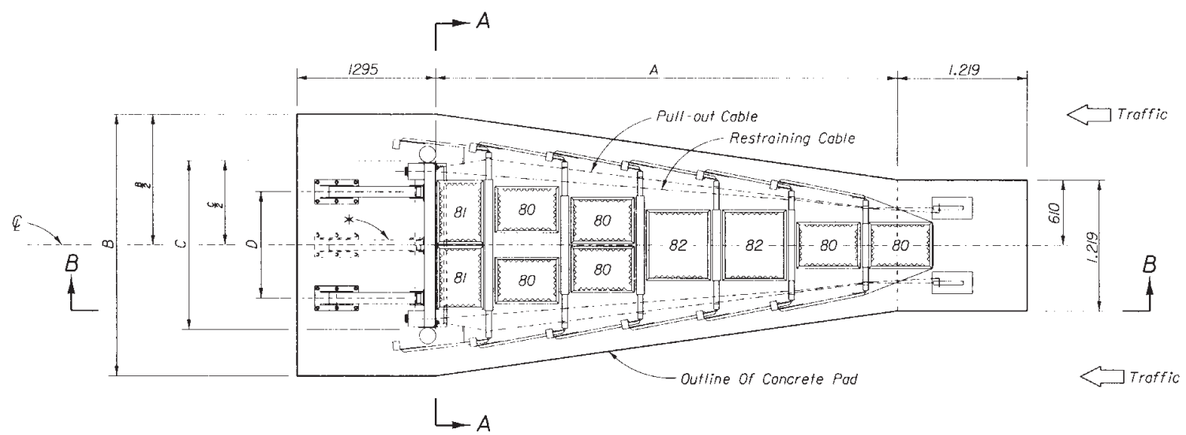

PLAN - UNIDIRECTIONAL UNIT (6 BAY UNIT SHOWN)

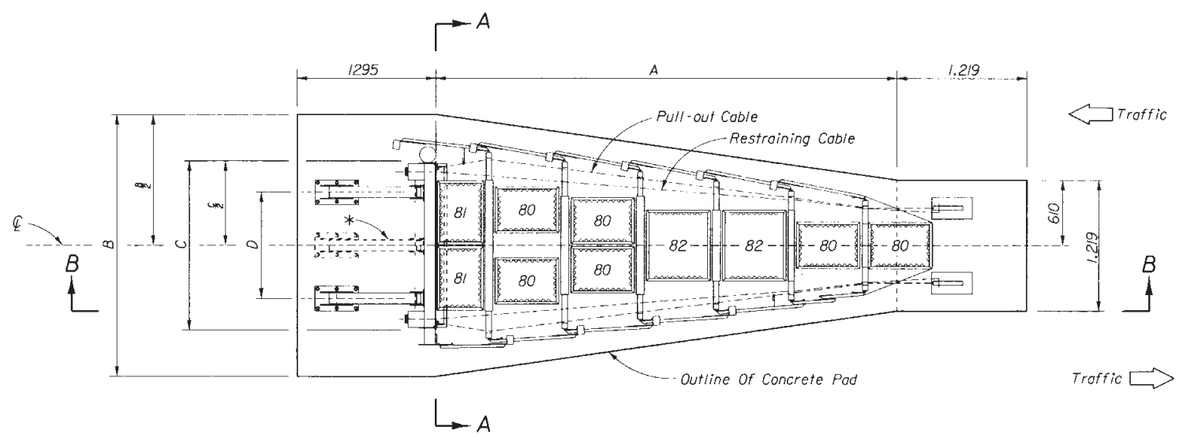

PLAN - BIDIRECTIONAL UNIT (6 BAY UNIT SHOWN)

* 2 diagonal support braces are required on narrow and medium width systems,
3 diagonal support braces are required on wide systems (C = 2.286).

SUPPLEMENTAL DIMENSIONS				
NO. OF BAYS	A	B	C	D
4 Bays	2.946	1829	889	580
		2438	1549	1003
		3048	2286	2096
5 Bays	3.632	1829	889	580
		2438	1549	1003
		3048	2286	2096
6 Bays	4.318	1829	889	580
		2438	1549	1003
		3048	2286	2096
7 Bays	5.004	1829	889	580
		2438	1549	1003
		3048	2286	2096
9 Bays	6.375	1829	889	580
		2438	1549	1003
		3048	2286	2096
12 Bays	8.433	1829	889	580
		2438	1549	1003
		3048	2286	2096

DIAGONAL BRACED BACKUP ASSEMBLY

STATE OF FLORIDA DEPARTMENT OF TRANSPORTATION
ROAD DESIGN

HEX-FOAM SANDWICH SYSTEM

	Names	Dates
Designed By	MFG/HKH	2/93
Drawn By	HKH	2/93
Checked By	JVG	2/93

Approved By Freddie Simmons
State Roadway Design Engineer

F.H.W.A. Approved:	Revision No.	Sheet No.	Index No.
	94	3 of 6	437

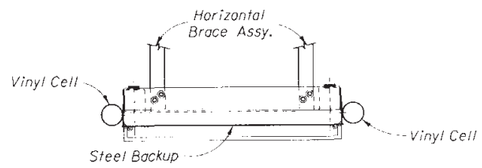

TOP VIEW (UNIDIRECTIONAL)

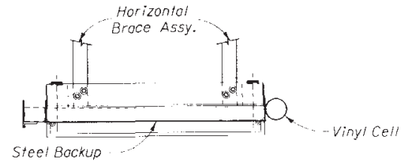

TOP VIEW (BIDIRECTIONAL)

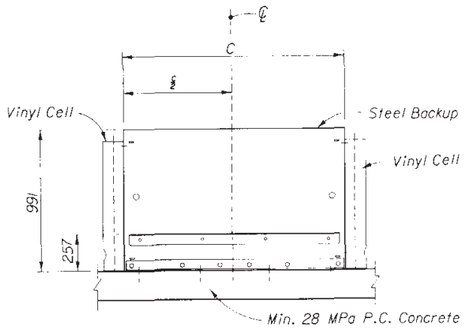

FRONT VIEW (W/O BAY UNITS)

STEEL BACKUP - UNIDIRECTIONAL

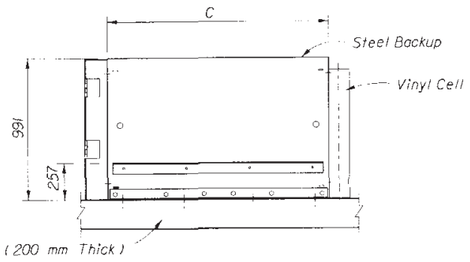

FRONT VIEW (W/O BAY UNITS)

STEEL BACKUP - BIDIRECTIONAL

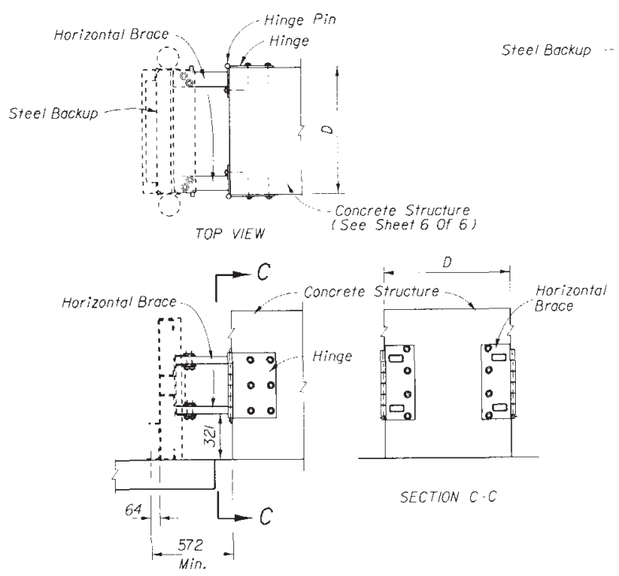

Concrete Structure Widths (D)
Narrow Units - 610 Min., 889 Max.
Medium Units - 914 Min., 1549 Max.
Wide Units - 1524 Min., 2286 Max.

CORNER MOUNT

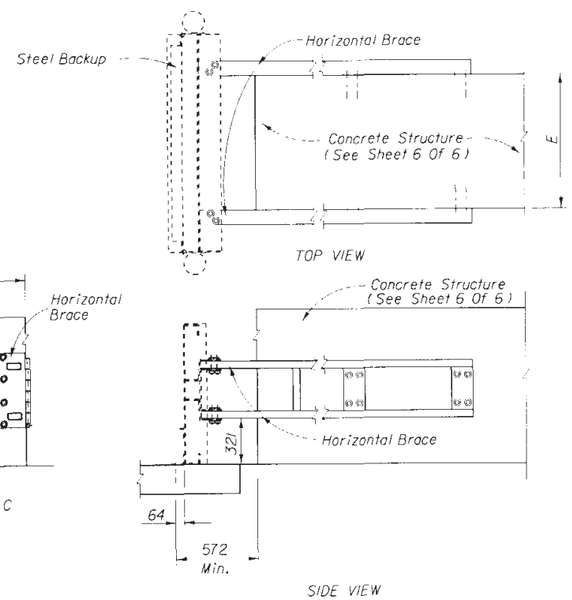

Concrete Structure Widths (E)
Narrow Units - 406 Min., 660 Max.
Medium Units - 711 Min., 1321 Max.
Wide Units - 1321 Min., 2057 Max.

SIDE MOUNT

Note: Horizontal braces are custom accessory items. Actual designs vary depending on the concrete backup structure.

TYPICAL HORIZONTAL BRACE ASSEMBLIES

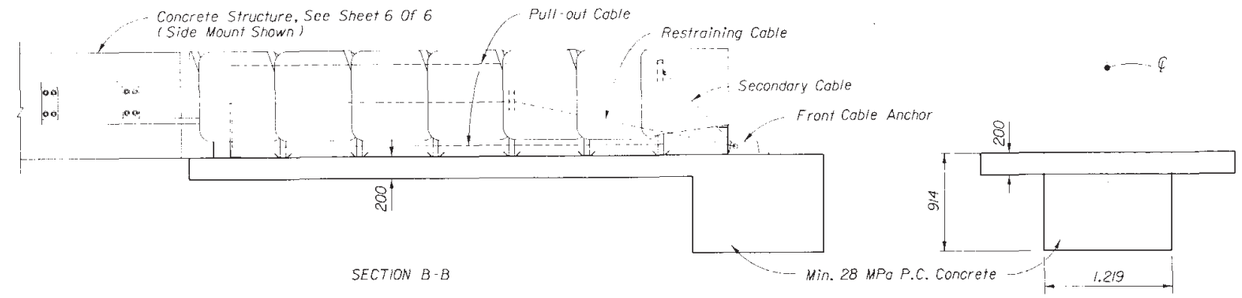

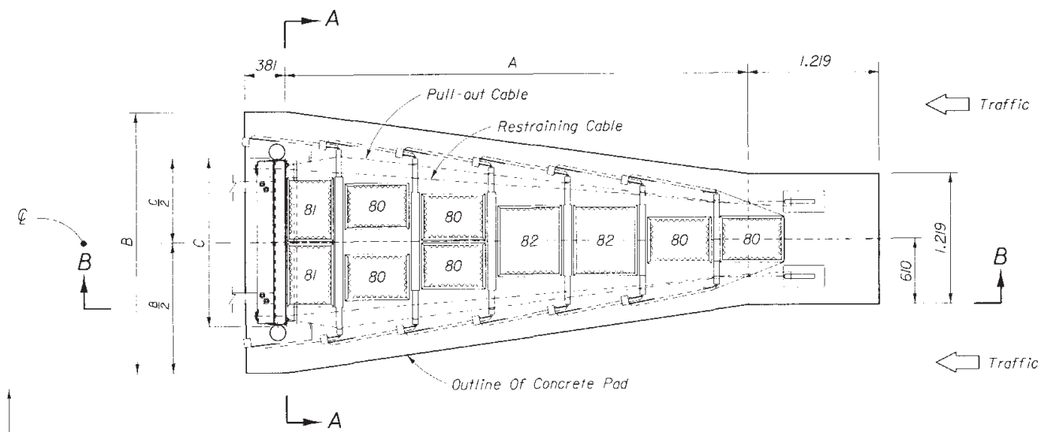

PLAN - UNIDIRECTIONAL UNIT (6 BAY UNIT SHOWN)

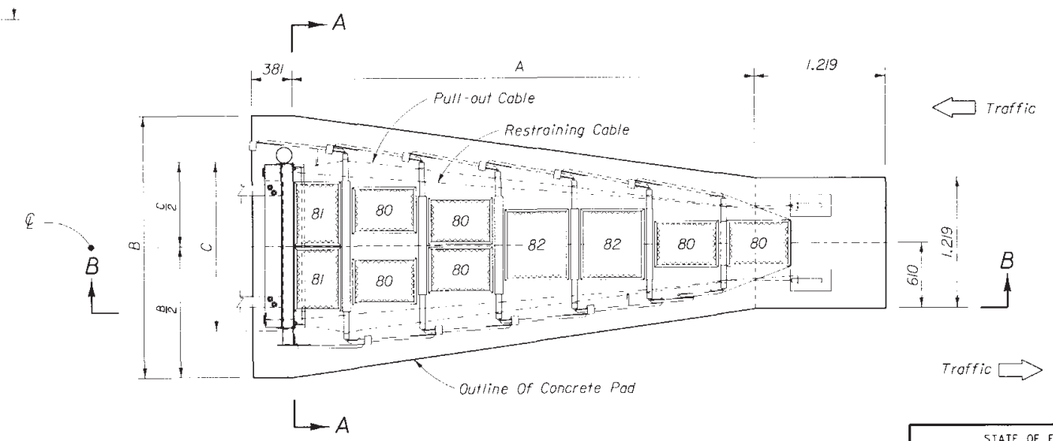

PLAN - BIDIRECTIONAL UNIT (6 BAY UNIT SHOWN)

SUPPLEMENTAL DIMENSIONS			
NO. OF BAYS	A	B	C
4 Bays	2.946	1829	889
		2438	1549
		3048	2286
5 Bays	3.632	1829	889
		2438	1549
		3048	2286
6 Bays	4.318	1829	889
		2438	1549
		3048	2286
7 Bays	5.004	1829	889
		2438	1549
		3048	2286
9 Bays	6.375	1829	889
		2438	1549
		3048	2286
12 Bays	8.433	1829	889
		2438	1549
		3048	2286

Note: See Sheet 6 of 6 for minimum concrete structure reinforcement.

HORIZONTAL BRACED BACKUP ASSEMBLY

STATE OF FLORIDA DEPARTMENT OF TRANSPORTATION
ROAD DESIGN

HEX-FOAM SANDWICH SYSTEM

	Names	Dates
Designed By	MFG/HKH	2/93
Drawn By	HKH	2/93
Checked By	JVG	2/93

Approved By Freddie Simmons
State Roadway Design Engineer

Revision No.	Sheet No.	Index No.
94	4 of 6	437

F.H.W.A. Approved:

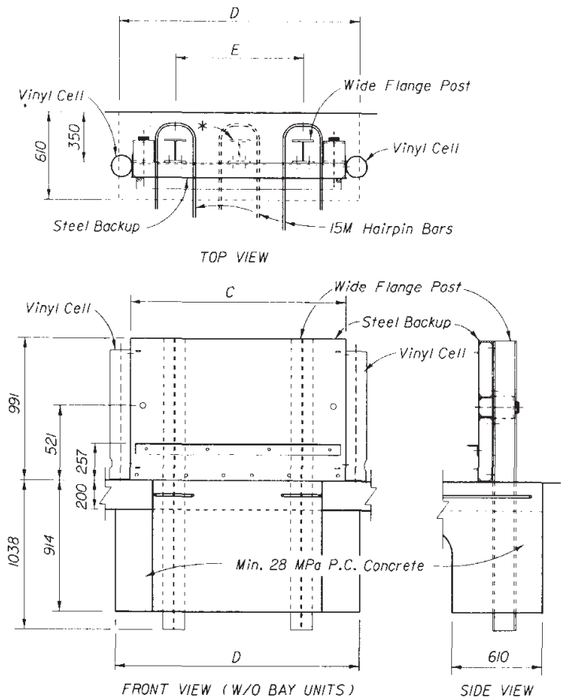

BACKUP ASSEMBLY - UNIDIRECTIONAL

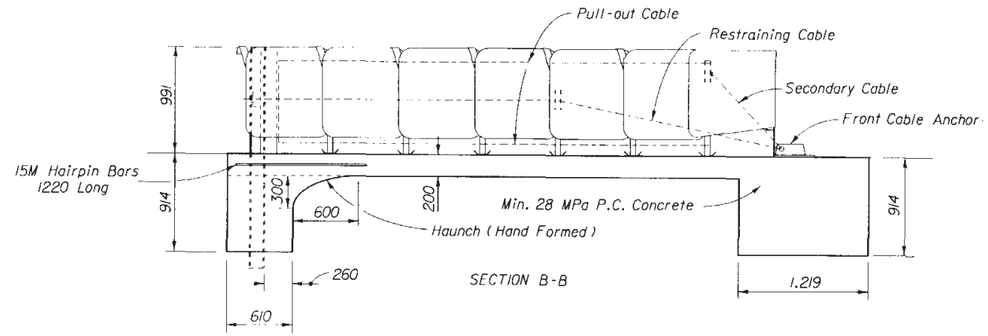

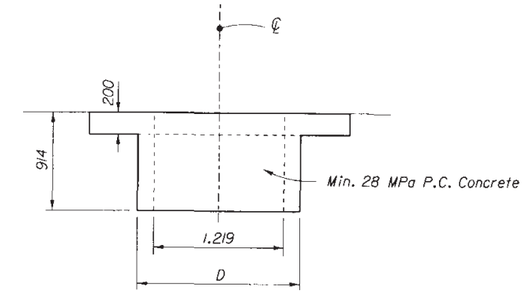

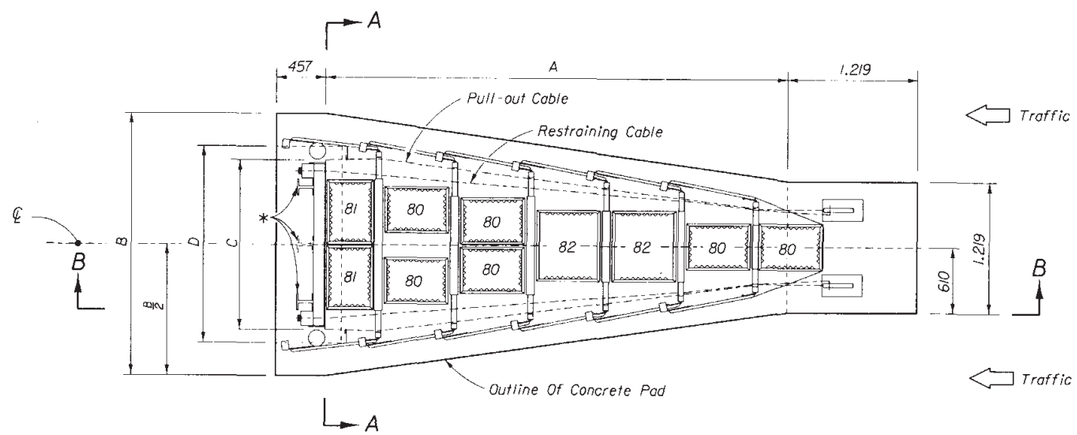

PLAN - UNIDIRECTIONAL UNIT (6 BAY UNIT SHOWN)

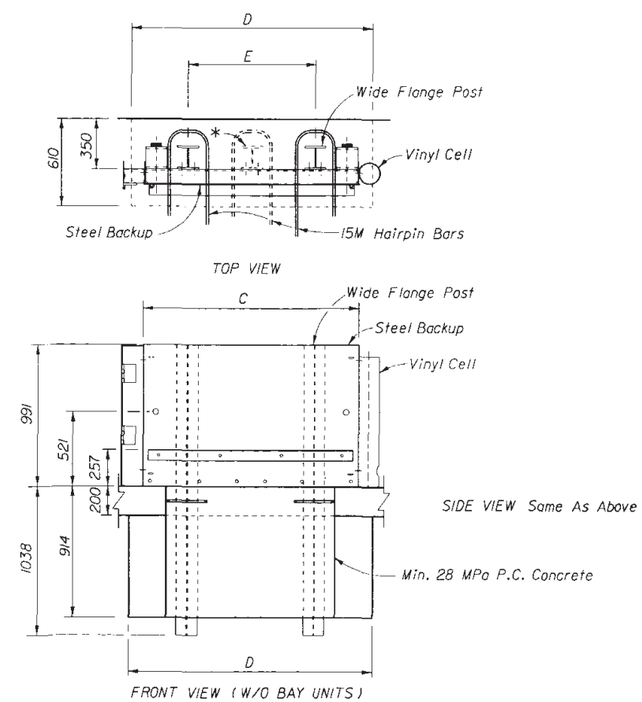

BACKUP ASSEMBLY - BIDIRECTIONAL

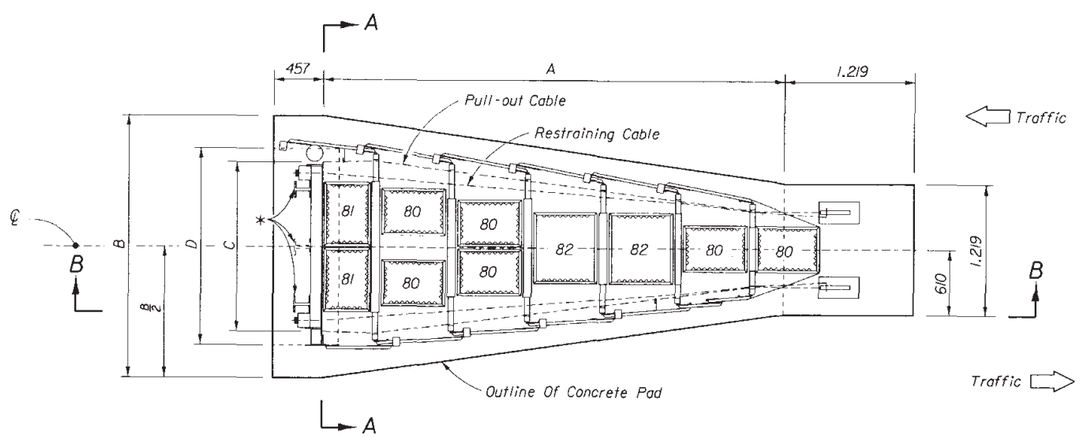

PLAN - BIDIRECTIONAL UNIT (6 BAY UNIT SHOWN)

* 2 WF posts are required on narrow and medium width systems,
3 WF posts are required on wide systems (C = 2286 mm).

SUPPLEMENTAL DIMENSIONS					
NO. OF BAYS	A	B	C	D	E
4 Bays	2.946	1829	889	1105	495
		2438	1549	1524	914
		3048	2286	2591	2033
5 Bays	3.632	1829	889	1105	495
		2438	1549	1524	914
		3048	2286	2591	2033
6 Bays	4.318	1829	889	1105	495
		2438	1549	1524	914
		3048	2286	2591	2033
7 Bays	5.004	1829	889	1105	495
		2438	1549	1524	914
		3048	2286	2591	2033
9 Bays	6.375	1829	889	1105	495
		2438	1549	1524	914
		3048	2286	2591	2033
12 Bays	8.433	1829	889	1105	495
		2438	1549	1524	914
		3048	2286	2591	2033

WIDE FLANGE BACKUP ASSEMBLY

STATE OF FLORIDA DEPARTMENT OF TRANSPORTATION
ROAD DESIGN

HEX-FOAM SANDWICH SYSTEM

	Names	Dates
Designed By	WFG/HKH	2/93
Drawn By	HKH	2/93
Checked By	JVG	2/93

Approved By Freddie Simmons
State Roadway Design Engineer

F.H.W.A. Approved:	Revision No.	Sheet No.	Index No.
	94	5 of 6	437

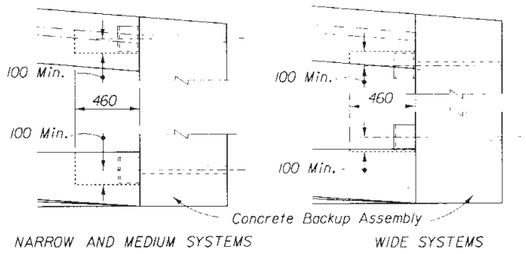

RESTRAINING CABLE ACCESS NOTCH LOCATIONS WHEN CONNECTING TO CONCRETE BARRIER WALL (SHOULDER)

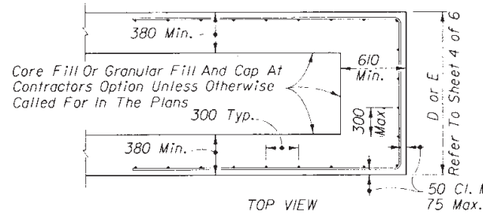

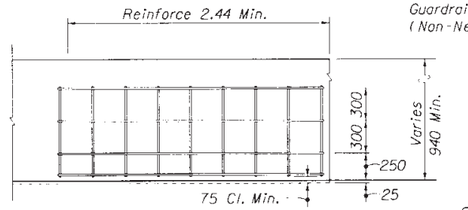

Note: All Reinforcement To Be 15M Bars

CONCRETE BACKUP STRUCTURE AND MINIMUM REINFORCEMENT FOR USE WITH HORIZONTAL BRACED BACKUP ASSEMBLIES

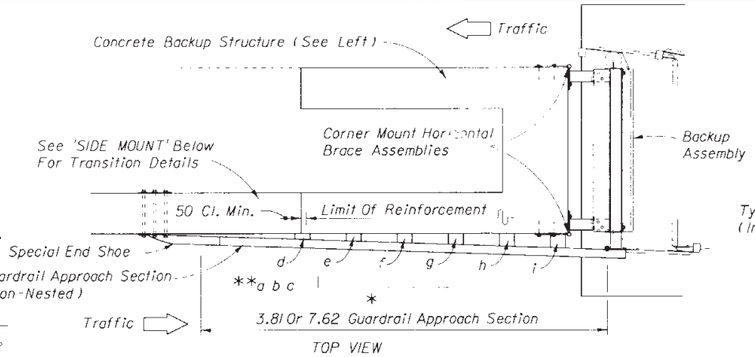

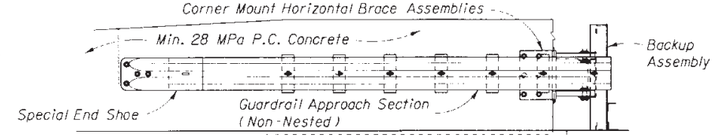

CORNER MOUNT

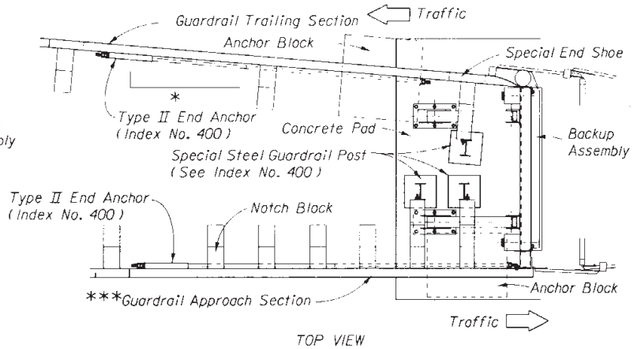

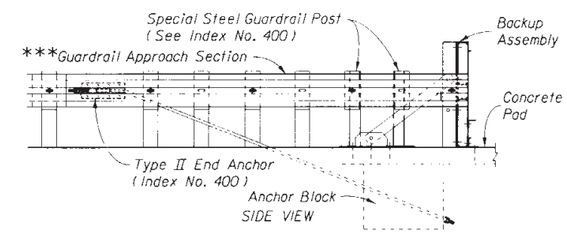

DIAGONAL BRACED BACKUP ASSEMBLY

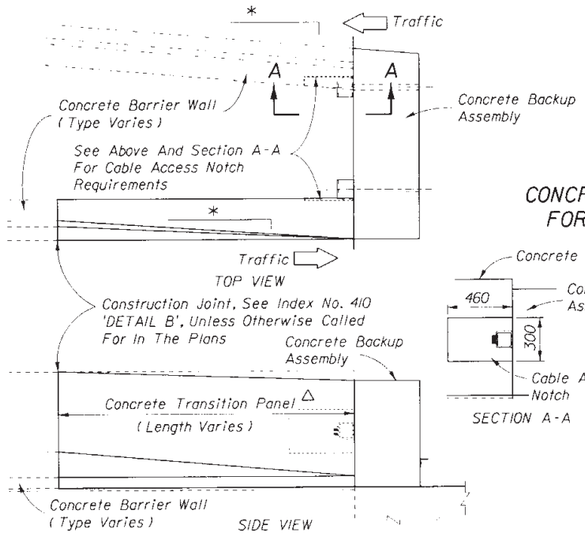

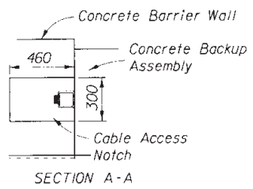

BARRIER WALL CONNECTION

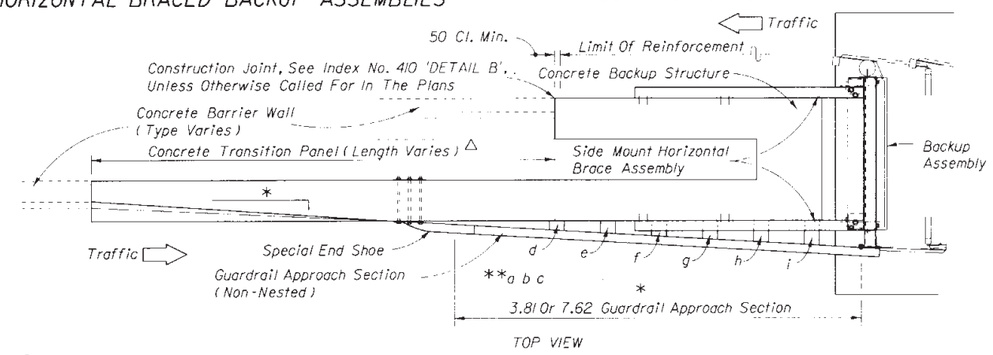

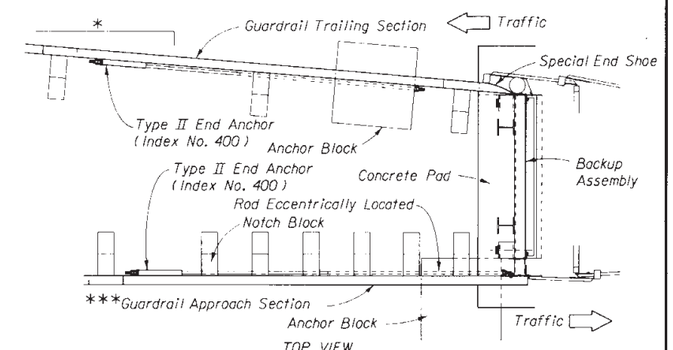

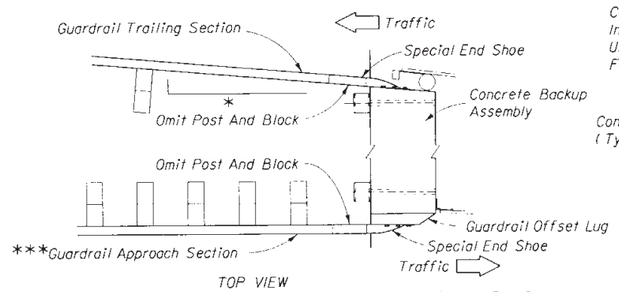

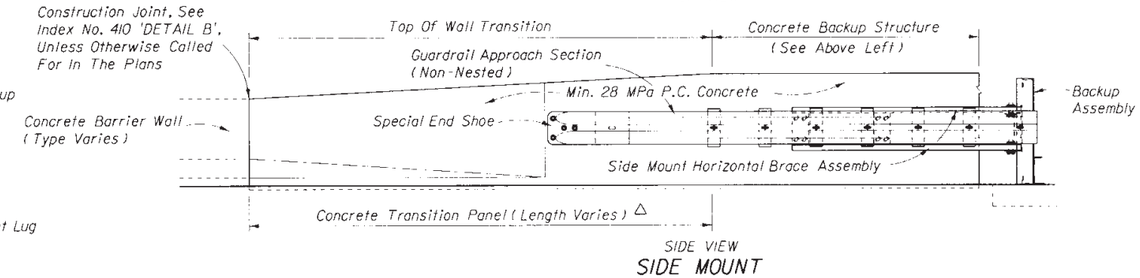

SIDE MOUNT

HORIZONTAL BRACED BACKUP ASSEMBLIES

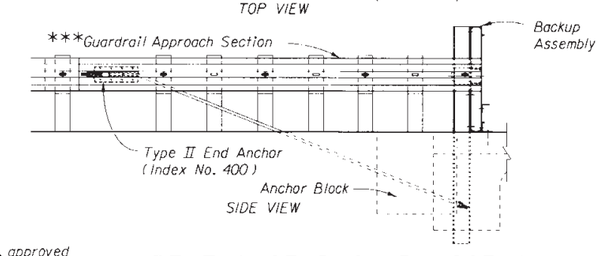

WIDE FLANGE BACKUP ASSEMBLY

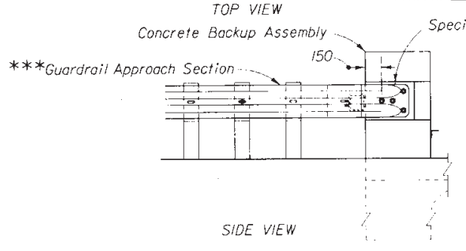

GUARDRAIL CONNECTION

CONCRETE BACKUP ASSEMBLY

△ In absence of core fill or fill and cap, construct footing in accordance with Index No. 410 'PLAIN CONCRETE BARRIER WALL (SHOULDER)'.

* 10:1 Or Flatter For Design Speeds Under 80 km/h
15:1 Or Flatter For Design Speeds 80 km/h And Greater

** Blocks a, b and c will be used on 7.62 m guardrail approaches only. When 7.62 m guardrail approaches are constructed, block a shall be spaced at 1.905 m and blocks b, c and d shall be spaced at 952 mm. All other blocks shall be spaced 476 mm. Blocks a, c, d, f and h shall be anchored to the concrete structure with 16 mm dia. anchor bolts with 130 mm embedment, hex nuts and standard washers, all other blocks shall be bolted to the rail only. On 3.81 m guardrail approaches all blocks shall be spaced 476 mm. Blocks d, f, and h shall be anchored to the concrete structure, with 16 mm dia. anchor bolts with 130 mm embedment, hex nuts and standard washers, all other blocks shall be bolted to the rail only. All offset blocks are to be field trimmed.

*** For Approach Guardrail Information Including Post Spacing And Nested Beams See Index No. 400 'DETAIL J'.

When the use of thru bolts are impractical for the installation of guardrail, approved chemical anchors may be used when installed in accordance with the anchor manufacturer's specifications. Diameters shall be in accordance with Index No. 400. Minimum embedment shall be 170 mm for 24 mm dia. anchors and 130 mm for 16 mm dia. anchors.

Cost of furnishing and installing guardrail items, including guardrail panels, special end shoes, standard posts and offset blocks, and all guardrail attachment hardware, shall be included in the contract unit price for Guardrail (Roadway), MI.

Cost of furnishing and installing special steel guardrail posts shall be included in the contract unit price for Guardrail Post Special, Each.

Cost of furnishing and installing concrete and reinforcing steel for concrete backup structures and concrete transition panels shall be included in the contract unit price for Impact Attenuator Vehicular (Hex-Foam Sandwich), Each.

TRANSITION SECTIONS

STATE OF FLORIDA DEPARTMENT OF TRANSPORTATION
ROAD DESIGN

HEX-FOAM SANDWICH SYSTEM

	Names	Dates
Designed By	MFG/HKH	2/93
Drawn By	HKH	2/93
Checked By	JVG	2/93

Approved By Freddie Simmons
State Roadway Design Engineer

F.H.W.A. Approved:	Revision No.	Sheet No.	Index No.
	94	6 of 6	437

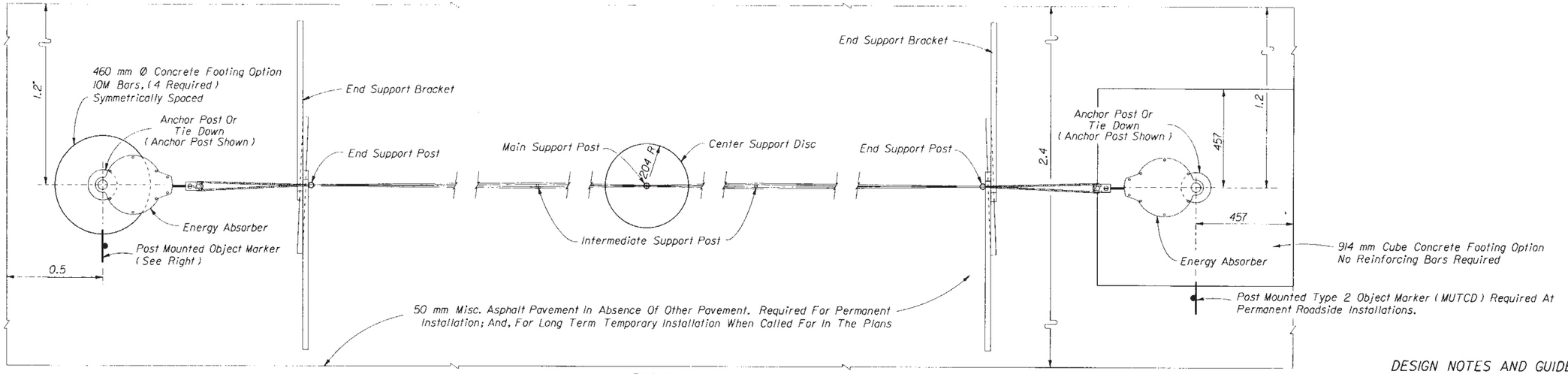

PLAN

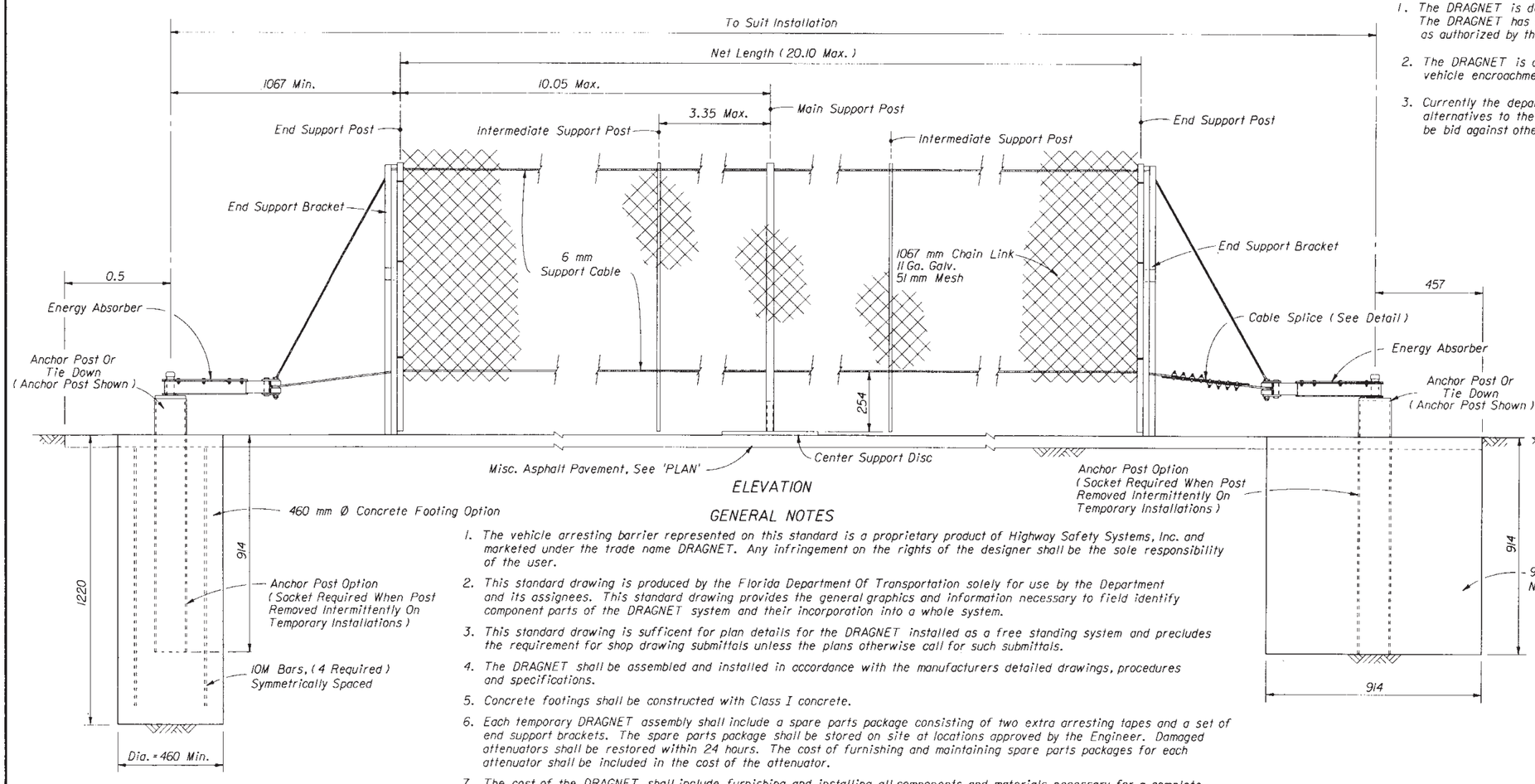

ELEVATION

DESIGN NOTES AND GUIDELINES

1. The DRAGNET is designed to safely stop automobiles when impacted at speeds of 100 km/h or less. The DRAGNET has a singular design and any adjustment to its design will not be permitted except as authorized by the manufacturer.
2. The DRAGNET is a restorable system that is particularly suited to the prevention of head-on vehicle encroachment into hazardous areas.
3. Currently the department does not recognize other proprietary items as being equally suitable alternatives to the DRAGNET and until such alternatives are available, the DRAGNET need not be bid against other proprietary items.

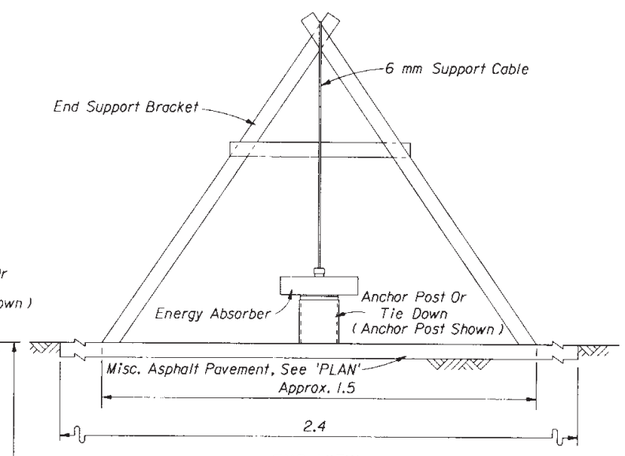

END VIEW

GENERAL NOTES

1. The vehicle arresting barrier represented on this standard is a proprietary product of Highway Safety Systems, Inc. and marketed under the trade name DRAGNET. Any infringement on the rights of the designer shall be the sole responsibility of the user.
2. This standard drawing is produced by the Florida Department Of Transportation solely for use by the Department and its assignees. This standard drawing provides the general graphics and information necessary to field identify component parts of the DRAGNET system and their incorporation into a whole system.
3. This standard drawing is sufficent for plan details for the DRAGNET installed as a free standing system and precludes the requirement for shop drawing submittals unless the plans otherwise call for such submittals.
4. The DRAGNET shall be assembled and installed in accordance with the manufacturers detailed drawings, procedures and specifications.
5. Concrete footings shall be constructed with Class I concrete.
6. Each temporary DRAGNET assembly shall include a spare parts package consisting of two extra arresting tapes and a set of end support brackets. The spare parts package shall be stored on site at locations approved by the Engineer. Damaged attenuators shall be restored within 24 hours. The cost of furnishing and maintaining spare parts packages for each attenuator shall be included in the cost of the attenuator.
7. The cost of the DRAGNET shall include furnishing and installing all components and materials necessary for a complete installation and will be paid for under the contract unit price for Impact Attenuator Vehicular (DRAGNET), Each, for permanent installations or Impact Attenuator Vehicular (DRAGNET) (Temp.), Each, for temporary installations.

STATE OF FLORIDA DEPARTMENT OF TRANSPORTATION
ROAD DESIGN

DRAGNET

	Names	Dates
Designed By	MFG/HKH	10/91
Drawn By	HKH	10/91
Checked By	JVG	10/91

Approved By Freddie Simmons, State Roadway Design Engineer

F.H.W.A. Approved:

Revision No.	Sheet No.	Index No.
94	1 of 2	438

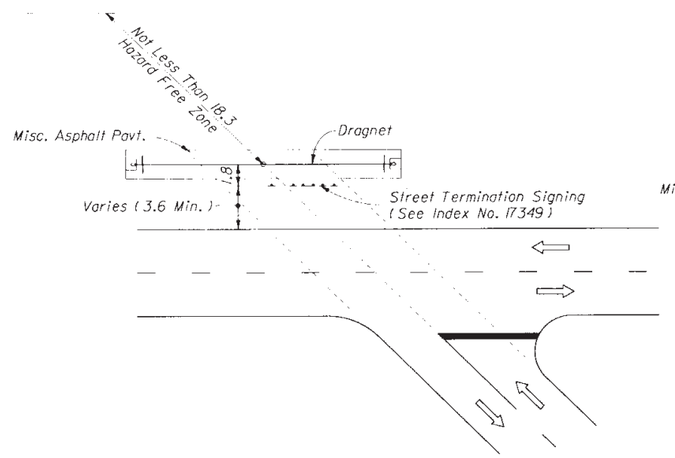

'T' INTERSECTIONS OR DEAD ENDS

PERMANENT APPLICATIONS

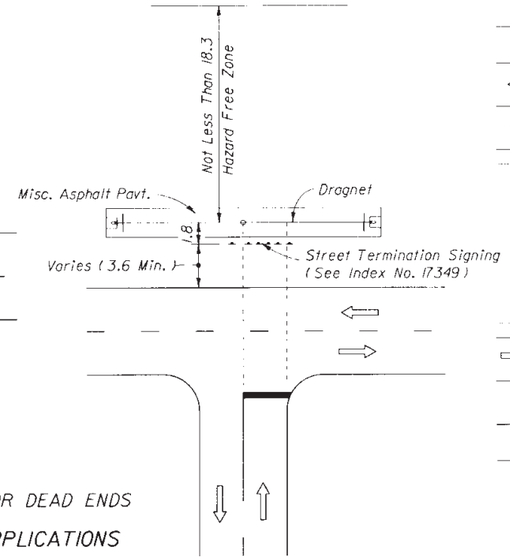

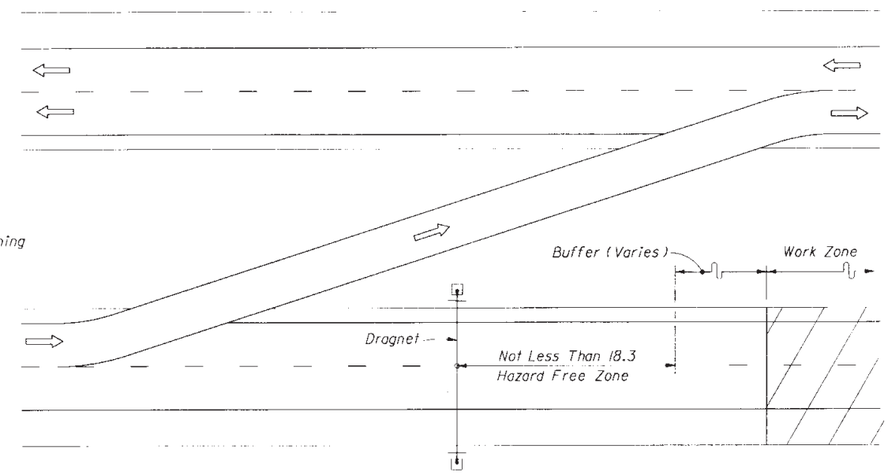

TEMPORARY ROADWAY CLOSURES

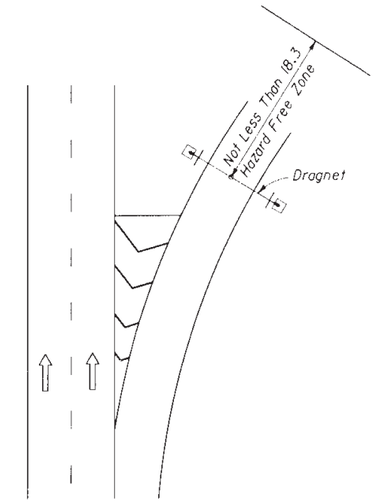

TEMPORARY RAMP CLOSURES

See Index No. 600 For Traffic Control Through Work Zones

TEMPORARY APPLICATIONS

TYPICAL APPLICATIONS

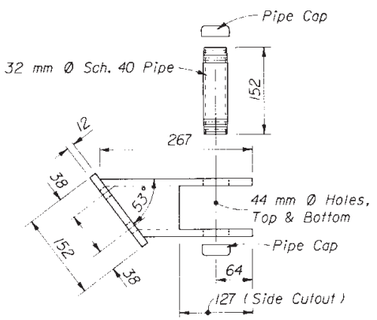

SIDE VIEW

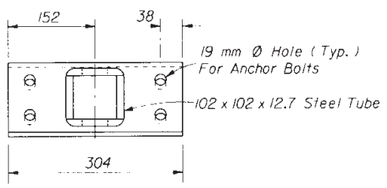

FRONT VIEW

For Use On Concrete Barrier Installation

TIE DOWN

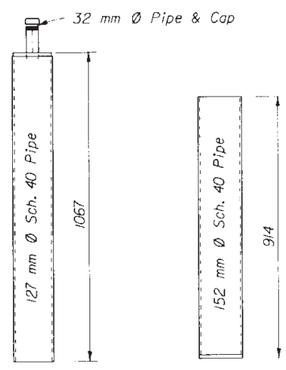

ANCHOR POST ASSEMBLY

For Use Where Anchor Post Is To Be Removed.

ANCHOR POST SOCKET

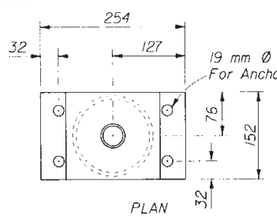

PLAN

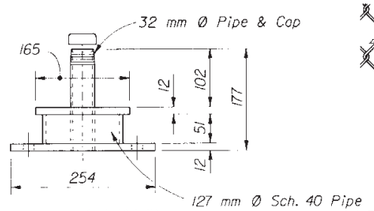

ELEVATION

For Use Inside Clear Zone. Can Be Used With Either Concrete Footing Option Or On Existing Concrete Slab.

TIE DOWN

Note: Tie down anchor bolts shall be 13 mm dia. adhesive anchors with 114 mm min. embedment. installed to manufacturers specifications; 4 required per tie down.

ANCHOR DETAILS

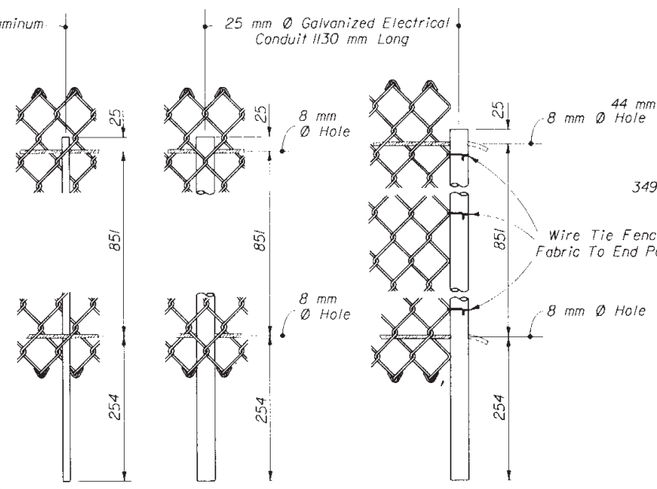

INTERMEDIATE SUPPORT POST

MAIN SUPPORT POST

END SUPPORT POST

SUPPORT POST DETAILS

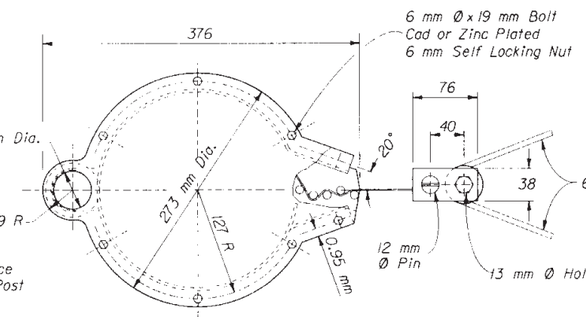

PLAN

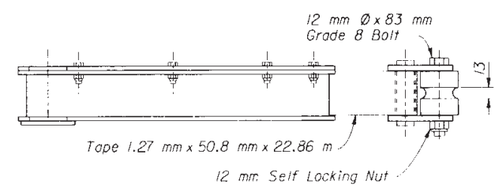

ELEVATION

ENERGY ABSORBER ASSEMBLY

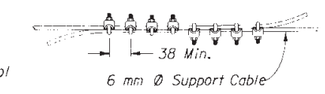

'U' Bolt Presses Against Dead End Of Cable. Torque Nuts To 15 N•m (8 Required)

CABLE SPLICE DETAIL

STATE OF FLORIDA DEPARTMENT OF TRANSPORTATION
ROAD DESIGN

DRAGNET

	Names	Dates
Designed By	MFG/HKH	10/91
Drawn By	HKH	10/91
Checked By	JVG	10/91
F.H.W.A. Approved:		

Approved By Freddie Simmons
State Roadway Design Engineer

Revision No.	Sheet No.	Index No.
94	2 of 2	438

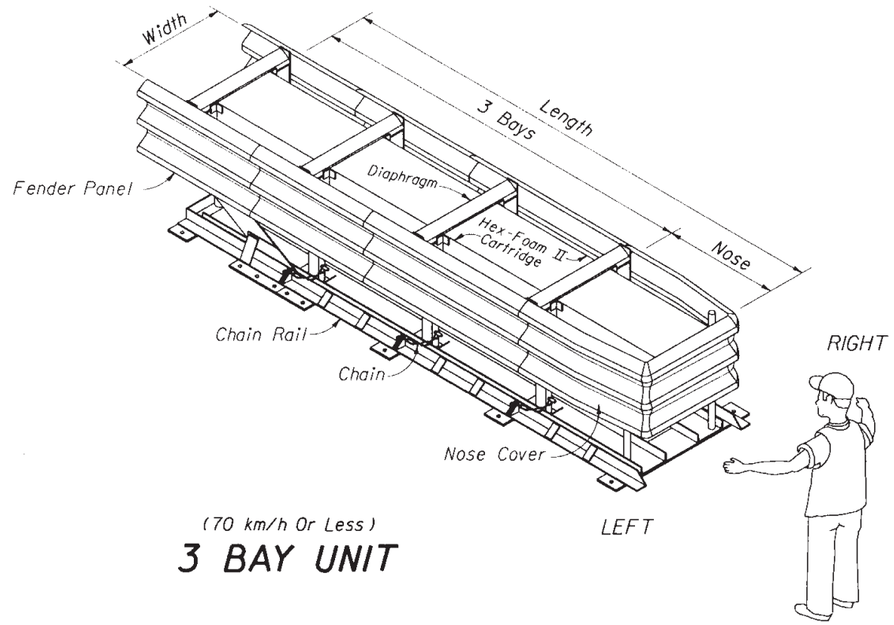

(70 km/h Or Less)

3 BAY UNIT

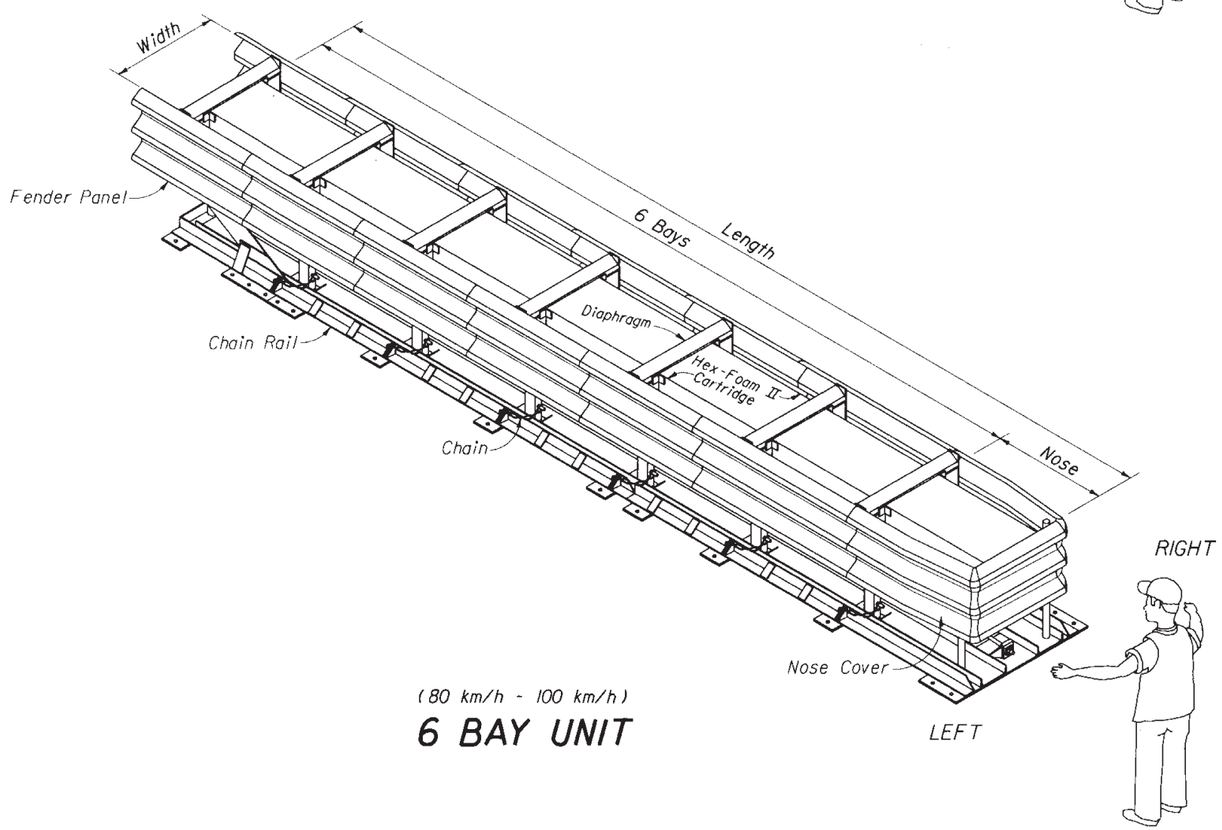

(80 km/h - 100 km/h)

6 BAY UNIT

GENERAL NOTES

1. The energy absorbing system represented on this standard drawing is a proprietary design by Energy Absorption Systems, Inc. and marketed under the trade name G-R-E-A-T_{CZ}, short for Construction Zone Guard Rail Energy Absorbing Terminal. Any infringement on the rights of the designer shall be the sole responsibility of the user.

2. This standard drawing is produced by the Florida Department Of Transportation solely for use by the Department and its assignees. This standard drawing provides the general graphics and information necessary to field identify component parts of the G-R-E-A-T_{CZ} System (G-R-E-A-T_{CZ}) and their incorporation into a whole system.

3. This standard drawing is sufficient for plan details for the G-R-E-A-T_{CZ} installed as a free standing system or installed in connection with concrete barrier walls and other fixed barrier systems, and precludes the requirement for shop drawing submittals unless the plans otherwise call for such submittals.

4. The G-R-E-A-T_{CZ} shall be assembled and installed in accordance with the manufacturers detailed drawings, procedures and specifications.

5. The standard widths for the 3-bay and 6-bay G-R-E-A-T_{CZ} are 610 mm and 762 mm.

6. Connection between the G-R-E-A-T_{CZ} and guardrail shall be as shown in the 'Transition Assembly Features' on Index No. 431.

   For concrete barrier wall with unidirectional traffic there is no connection between the G-R-E-A-T_{CZ} and the wall. The G-R-E-A-T_{CZ} should abut the end of the wall, but a space not to exceed 280 mm is allowed. For concrete barrier wall with bidirectional traffic, the transitional panel shown on the "Tension Strut Backup Assembly 'Insert'" details shall be the only connection between the G-R-E-A-T_{CZ} and the wall.

   Variation from the connections described above shall be as detailed in the plans or as prescribed by the manufacturer.

7. Only the G-R-E-A-T_{CZ} Hex-Foam II cartridges shall be used in all bays and the nose section.

8. The G-R-E-A-T_{CZ} shall be constructed on cross slopes 1: 12.5 or flatter.

9. All metallic components shall meet the galvanizing requirements for guardrail, Index No. 400.

10. Chemical bolt anchors (MP-3 anchors) are supplied with each G-R-E-A-T_{CZ} unit purchase. For units that are relocated and require reset anchorage, the user shall reinstall the unit with manufacturer supplied new MP-3 anchors.
    The standard Florida package will not include anchor pins. Anchor pins will be supplied by the manufacturer only when called for in the plans. For units that are relocated and require reset anchorage, the user shall reinstall the unit with manufacturer supplied new MP-3 anchors.

11. G-R-E-A-T_{CZ} units that have been impacted by vehicles but are to be repaired and remain in service shall have design condition anchorages when restorations are complete. Units with disturbed anchors can be repositioned over undisturbed foundation and reset, or, reset in place with the disturbed portions of their foundations restored to design condition. All disturbed anchors are to be replaced with new MP-3 anchors.

12. The G-R-E-A-T_{CZ} manufacturer's 'Driveable Pile Anchor System' (DPA system) is not a part of this standard. Any use of the DPA System will require shop drawing approval.

13. The cost for foundations, subgrade preparation and miscellaneous asphalt shown on this index shall be included in the cost for the G-R-E-A-T_{CZ} system. The G-R-E-A-T_{CZ} System will be paid for under the contract unit price for Impact Attenuator, Vehicular, With Spare Parts (GREAT) (TEMP), Each.

DESIGN NOTES AND GUIDELINES

1. The G-R-E-A-T_{CZ} System (G-R-E-A-T_{CZ}) is designed to cushion automobile end-on hits and to redirect automobiles from side hits. The G-R-E-A-T_{CZ} is designed to shield narrow fixed hazards or the ends of other fixed barrier systems. The 6 Bay Unit shall be used for work zone speeds of 80 km/h and above, up to and including 100 km/h. The 3 Bay Unit can be used for work zone speeds of 70 km/h or less.

2. The G-R-E-A-T_{CZ} is a restorable system that is particularly suited to shielding hazards subject to high speed traffic, high volume traffic, and/or traffic with a history of frequent errant vehicle departures from the roadway or the potential exists for such departures. The G-R-E-A-T_{CZ} alone is not suited to shielding a wide hazard. The G-R-E-A-T_{CZ} is particularly suited to shielding hazards where the approach space is limited; and, is particularly suited to conditions where the terminal must be located close to the traffic lane.

3. Currently the Department does not recognize other proprietary items as being equally suitable alternatives to the G-R-E-A-T_{CZ}, and until such alternatives are available, the G-R-E-A-T_{CZ} need not be bid against other proprietory items.

STATE OF FLORIDA DEPARTMENT OF TRANSPORTATION
ROAD DESIGN

CONSTRUCTION ZONE G-R-E-A-T

	Names	Dates
Designed By	MFG/JVG	10/91
Drawn By	JBW	10/91
Checked By	JVG/RER	10/91

Approved By Freddie Simmons
State Roadway Design Engineer

Revision No.	Sheet No.	Index No.
94	1 of 5	439

F.H.W.A. Approved:

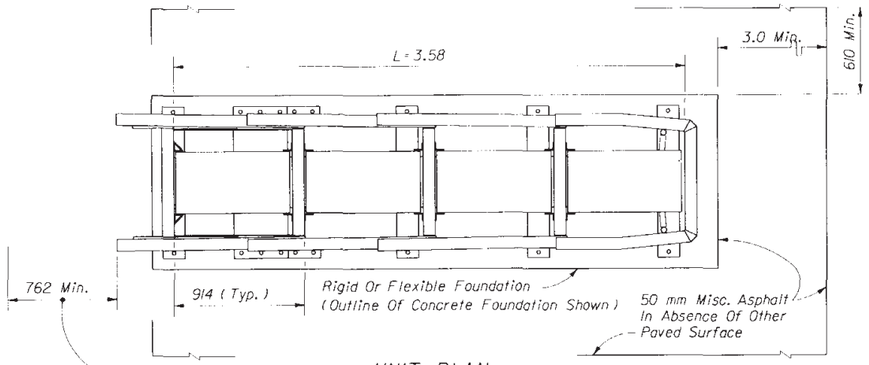

UNIT PLAN

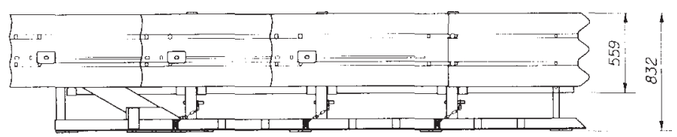

UNIT ELEVATION

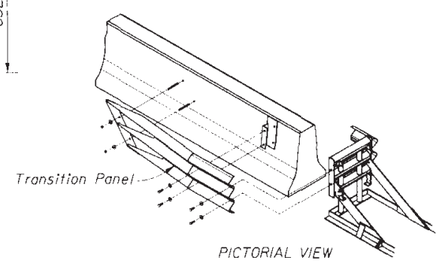

PICTORIAL VIEW

INSET

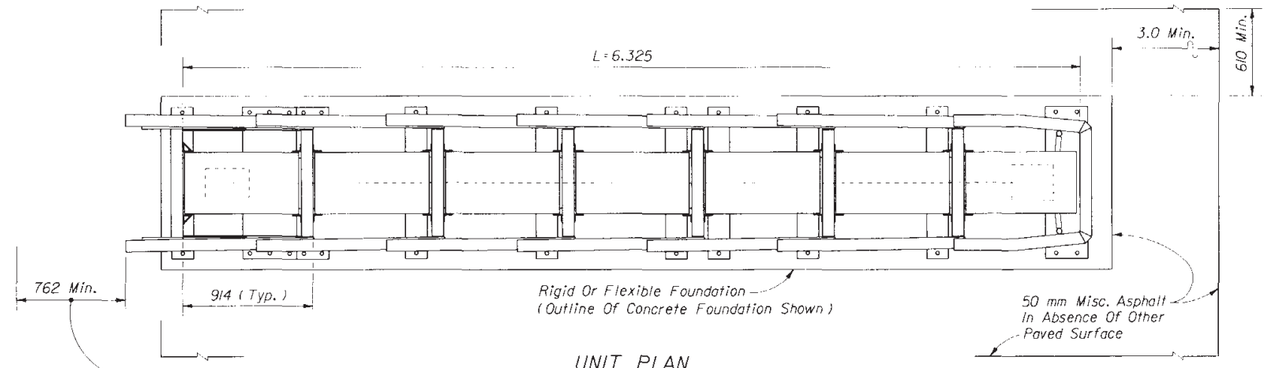

UNIT PLAN

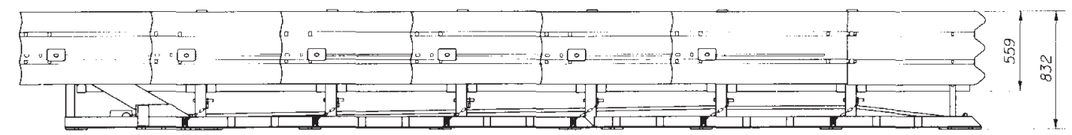

UNIT ELEVATION

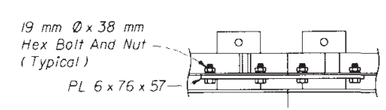

Chain Rail Splice
DETAIL A

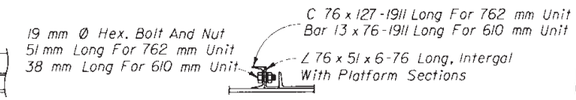

Channel Splice
DETAIL B

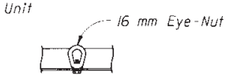

Lifting Lug
DETAIL C

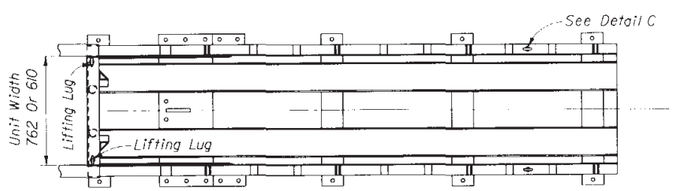

STRUT AND RAIL PLAN

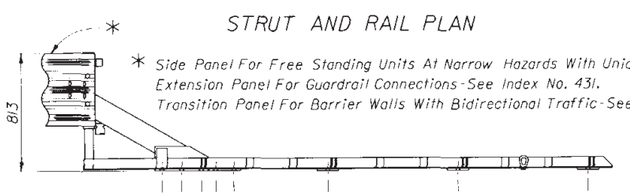

* Side Panel For Free Standing Units At Narrow Hazards With Unidirectional Traffic.
Extension Panel For Guardrail Connections - See Index No. 431.
Transition Panel For Barrier Walls With Bidirectional Traffic - See INSET.

STRUT AND RAIL ELEVATION

3 BAY UNIT

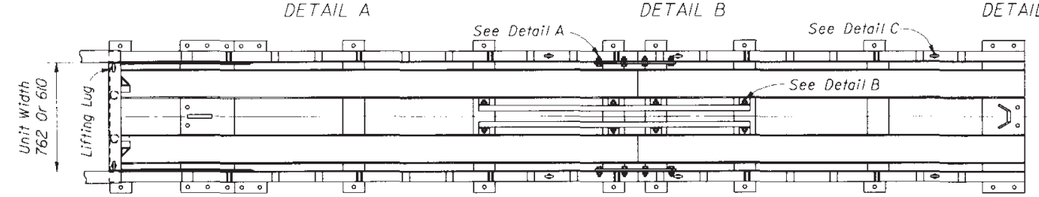

STRUT AND RAIL PLAN

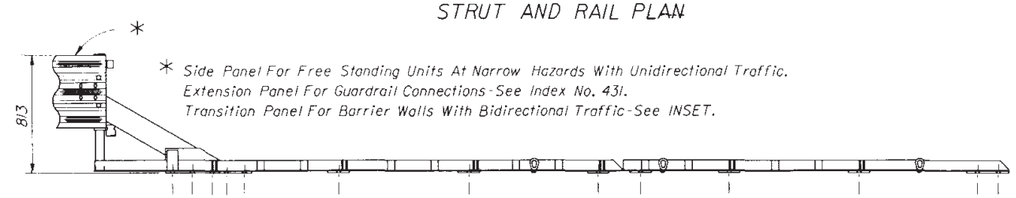

* Side Panel For Free Standing Units At Narrow Hazards With Unidirectional Traffic.
Extension Panel For Guardrail Connections - See Index No. 431.
Transition Panel For Barrier Walls With Bidirectional Traffic - See INSET.

STRUT AND RAIL ELEVATION

6 BAY UNIT

TENSION STRUT BACKUP ASSEMBLY

STATE OF FLORIDA DEPARTMENT OF TRANSPORTATION
ROAD DESIGN

CONSTRUCTION ZONE
G-R-E-A-T

	Names	Dates
Designed By	MFG/JVG	11/91
Drawn By	JBW	11/91
Checked By	JVG/RER	11/91

Approved By Freddie Simmons
State Roadway Design Engineer

F.H.W.A. Approved:	Revision No.	Sheet No.	Index No.
	94	2 of 5	439

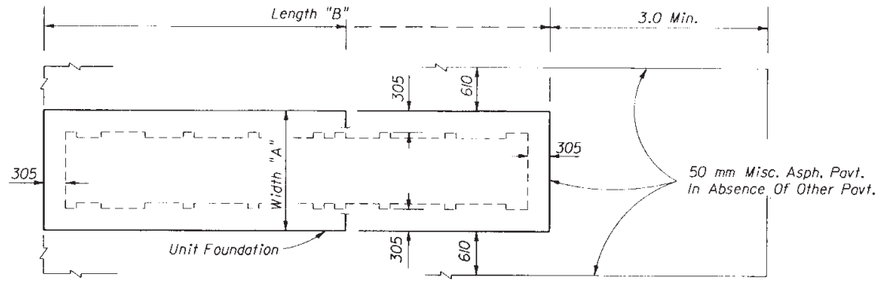

PLAN

FOUNDATION DIMENSIONS			
UNIT		Width "A" (m)	Length "B" (m)
Bays	Width (mm)		
3	610	1.5	4.32
	762	1.7	4.32
6	610	1.5	7.07
	762	1.7	7.07

FOUNDATION PAD & MISCELLANEOUS ASPHALT PAVEMENT

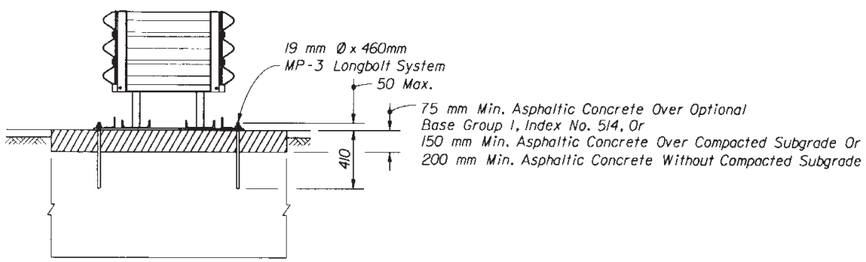

SECTION CC

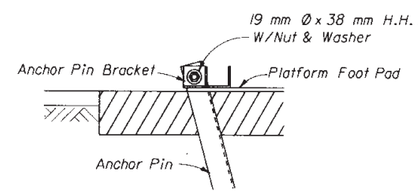

DETAIL A

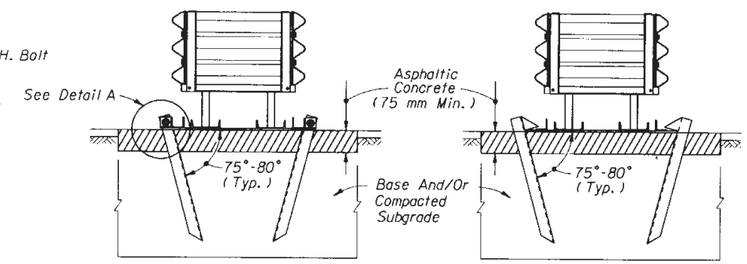

SECTION AA

SECTION BB

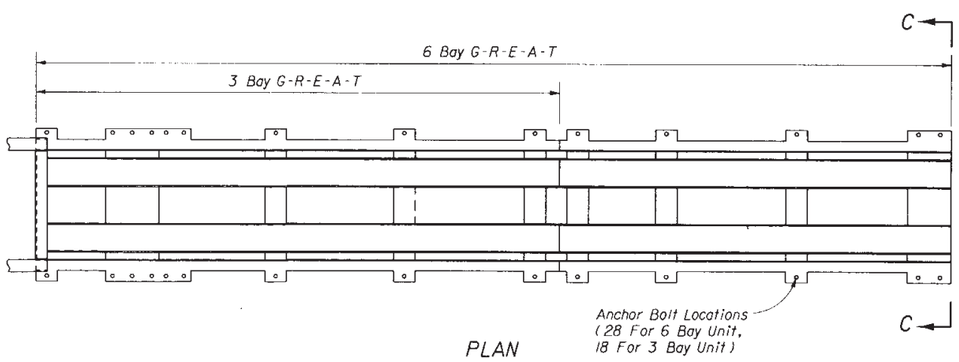

PLAN

MP-3 LONGBOLT ANCHOR SYSTEM

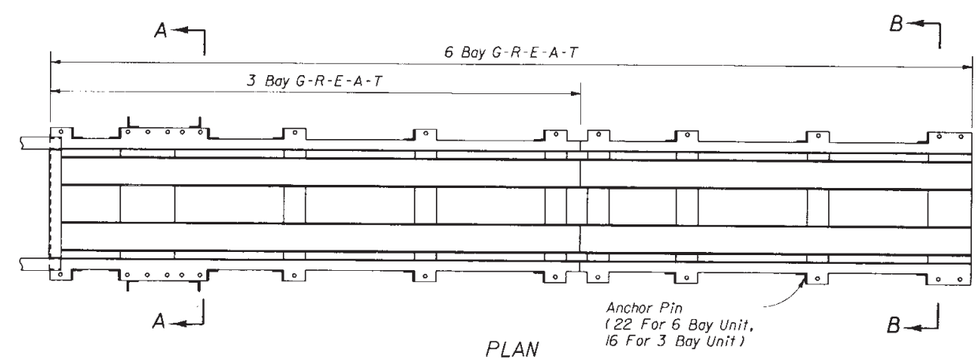

PLAN

Note: Anchor pin system is to be used only when called for in the plans. See General Notes Nos. 10 & 11.

ANCHOR PIN SYSTEM

FLEXIBLE FOUNDATIONS

STATE OF FLORIDA DEPARTMENT OF TRANSPORTATION
ROAD DESIGN

CONSTRUCTION ZONE G-R-E-A-T

	Names	Dates
Designed By	MFG/JVG	11/91
Drawn By	JBW	11/91
Checked By	JVG/RER	11/91

Approved By Freddie Simmons
State Roadway Design Engineer

Revision No.	Sheet No.	Index No.
94	3 of 5	439

F.H.W.A. Approved:

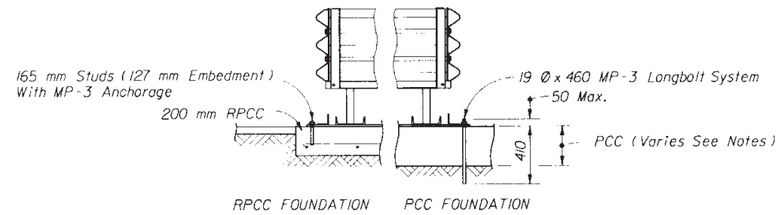

SECTIONS CC (HALF SECTIONS)

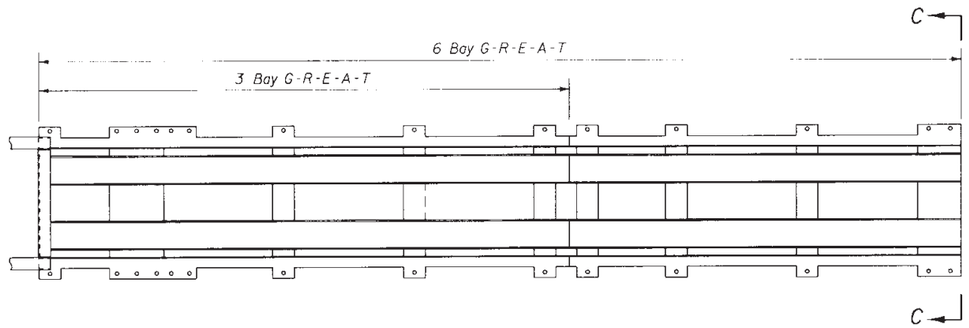

PLAN

MP-3 ANCHOR SYSTEM

RIGID FOUNDATION NOTES

1. The reinforced portland cement concrete (RPCC) foundation is designed to make the G-R-E-A-T_{CZ} a transportable system. The slab foundation shall be constructed with 28 MPa min. compressive strength concrete. The slab shall be seated so the top of the slab is flush with the surface intended for approaching vehicles. The surrounding surface shall be paved as shown in this index on the 'Unit Plan' for the 'Tension Strut Backup Assembly'. The G-R-E-A-T_{CZ} shall be anchored exclusively with the 165 mm MP-3 anchor system supplied with the G-R-E-A-T_{CZ} unit, unless another anchor is supplied or approved by the G-R-E-A-T_{CZ} manufacturer.

2. The nonreinforced portland cement concrete (PCC) foundation shall be Class I concrete, having plan dimensions equal to or greater than those for the RPCC foundation. The PCC foundation utilization options are as follows: (a) Poured in place as an expendable slab, having a thickness of not less than 150 mm; disposal of the slab will be as approved by the Engineer, (b) Project constructed roadway PCC pavement, or, (c) Existing 230 mm PCC roadway pavement.

   The utilization option applied shall be as approved by the Engineer on a site specific basis. The top of the PCC foundation shall be flush with the surface intended for approaching vehicles. In absence of surrounding pavement the surrounding surface shall be paved as shown in this index on the 'Unit Plan' for the 'Tension Strut Backup Assembly'.

   The G-R-E-A-T_{CZ} installed on PCC pavement shall be anchored only with the MP-3 Longbolt system supplied with the G-R-E-A-T_{CZ} unit. Holes for the 460 mm anchors shall be drilled through both existing and new pavements. When the G-R-E-A-T_{CZ} is removed from the project pavement or from existing pavement that is to remain in place, the longbolt anchor shall be cut off flush with the top of the pavement, unless the plans call for other treatment.

3. For additional information see the General Notes.

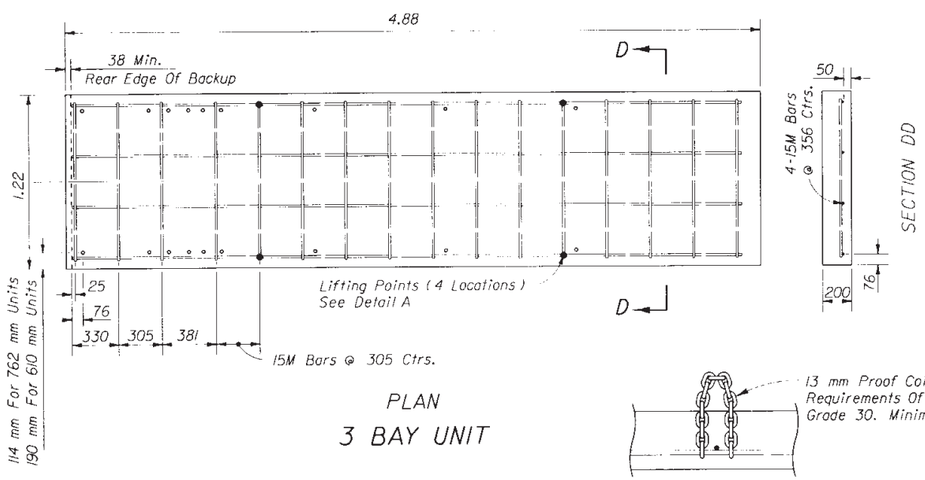

PLAN
3 BAY UNIT

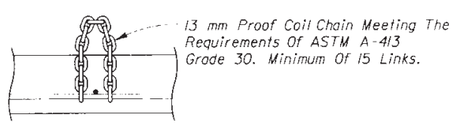

DETAIL A

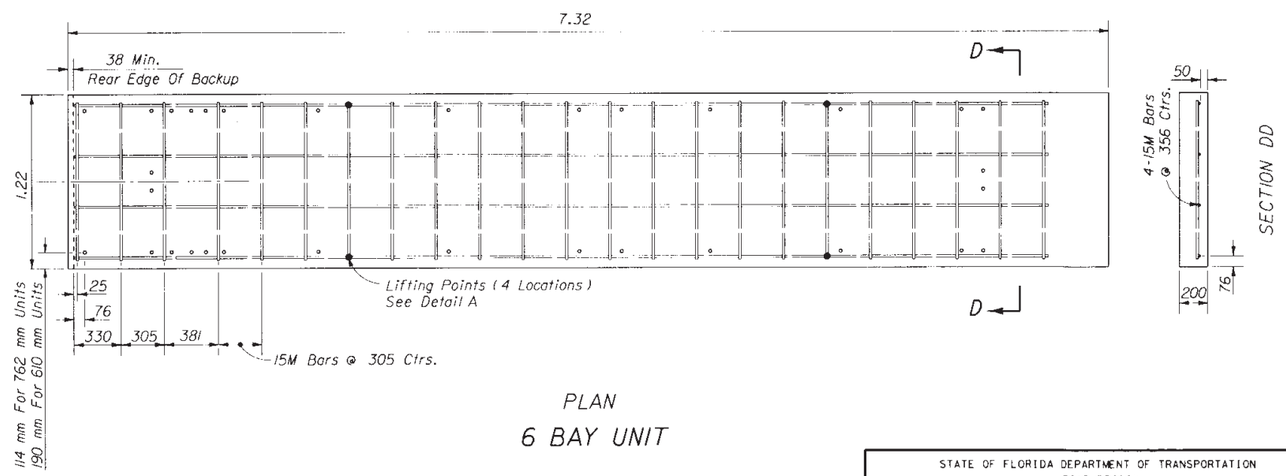

PLAN
6 BAY UNIT

REINFORCED CONCRETE PAD SYSTEM (RPCC)

RIGID FOUNDATIONS

STATE OF FLORIDA DEPARTMENT OF TRANSPORTATION
ROAD DESIGN

CONSTRUCTION ZONE
G-R-E-A-T

	Names	Dates
Designed By	MFG/JVG	11/91
Drawn By	JBW	11/91
Checked By	JVG/RER	11/91

Approved By Freddie Simmons
State Roadway Design Engineer

Revision No.	Sheet No.	Index No.
94	4 of 5	439

F.H.W.A. Approved:

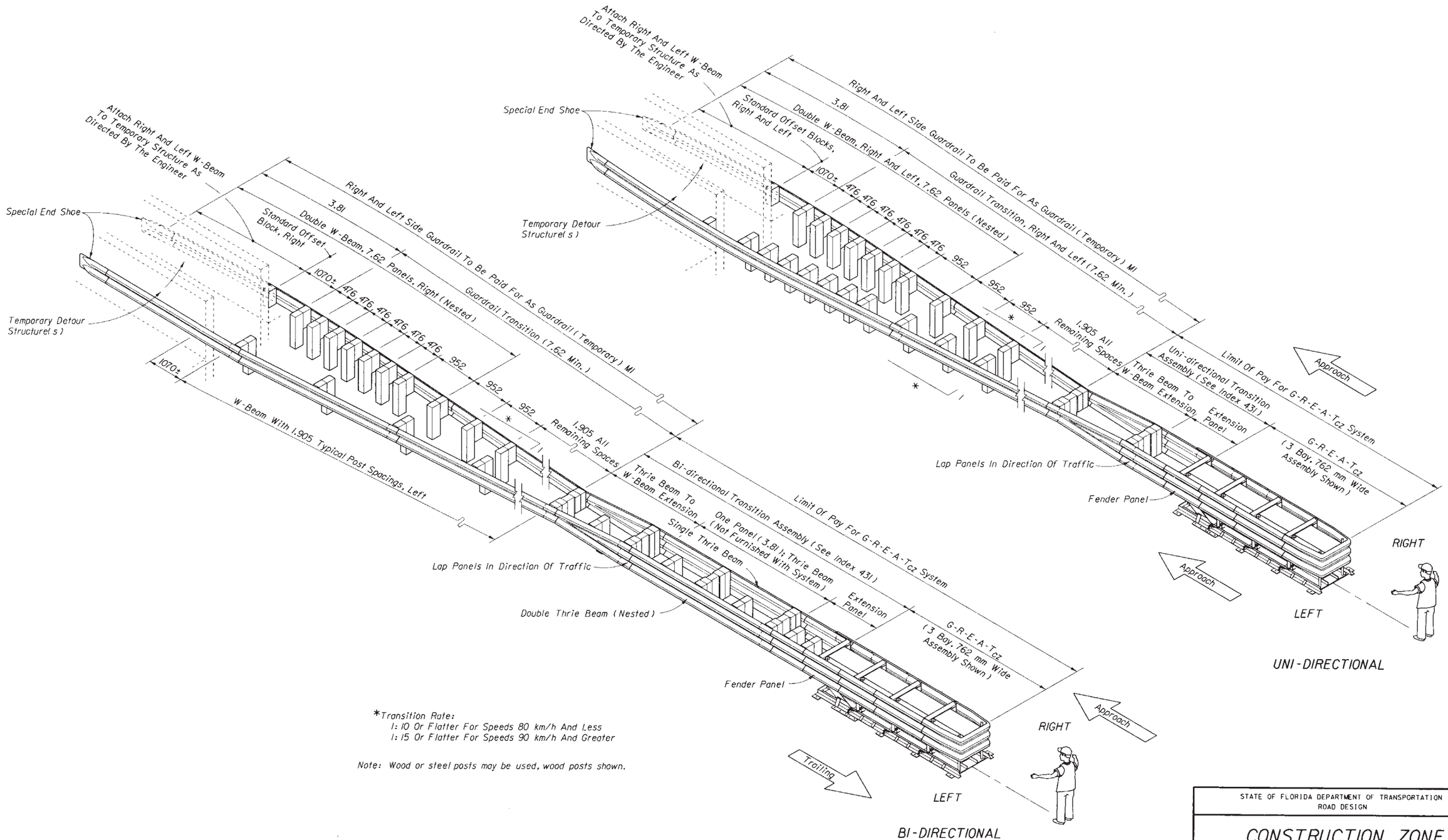

*Transition Rate:
1: 10 Or Flatter For Speeds 80 km/h And Less
1: 15 Or Flatter For Speeds 90 km/h And Greater

Note: Wood or steel posts may be used, wood posts shown.

GUARDRAIL TRANSITION TO TEMPORARY DETOUR STRUCTURES

STATE OF FLORIDA DEPARTMENT OF TRANSPORTATION
ROAD DESIGN

CONSTRUCTION ZONE G-R-E-A-T

	Names	Dates
Designed By	MFG/STD	12/93
Drawn By	HKH	12/93
Checked By	JVG	12/93

Approved By Freddie Simmons
State Roadway Design Engineer

Revision No.	Sheet No.	Index No.
94	5 of 5	439

F.H.W.A. Approved:

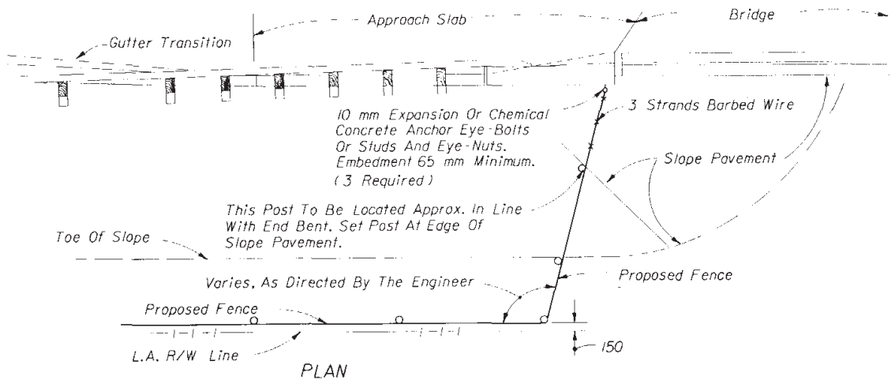

PLAN

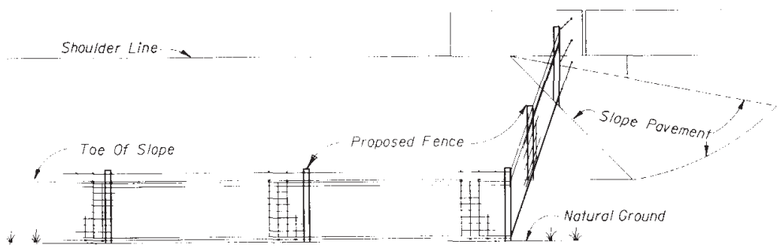

ELEVATION

FENCING TERMINALS AT BRIDGE ENDS
(ROADWAY)

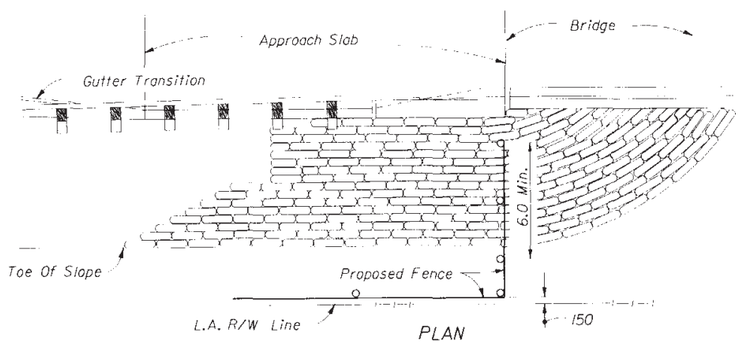

PLAN

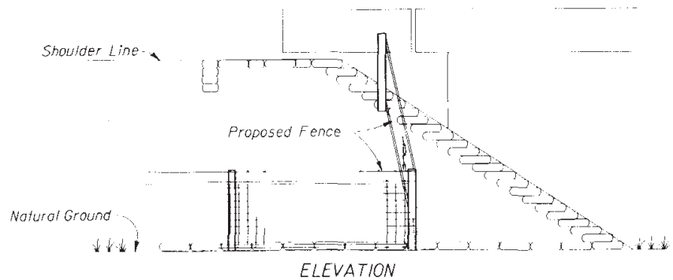

ELEVATION

FENCING TERMINALS AT BRIDGE ENDS
(STREAM CROSSING)

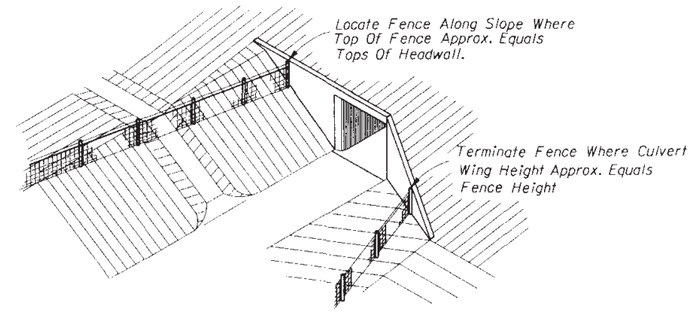

PICTORIAL VIEW

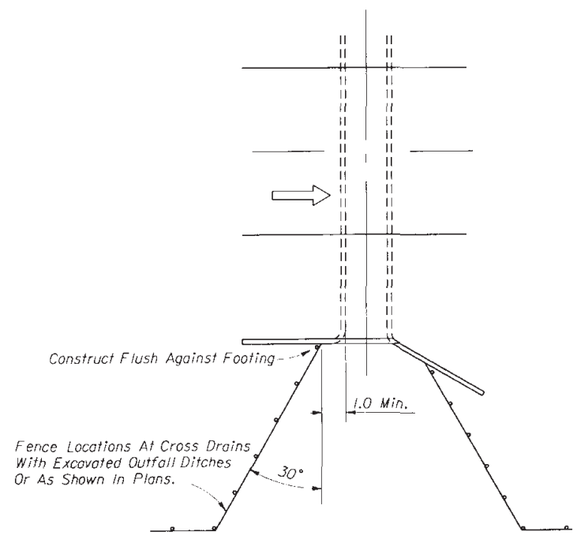

PLAN
(For Heights Of Headwall Greater Than 1.2 m)
FENCING TERMINALS AT BOX CULVERTS

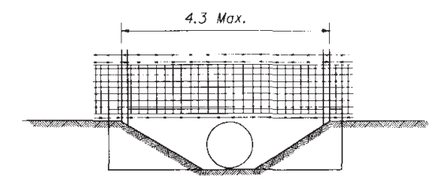

FENCING DETAIL AT CULVERT
(For Heights Of Headwalls 1.2 m Or Less.)

Note: When height of headwall is 1.2 m or less (drainage pipe 900 mm or less) the fence shall not be tied to the headwall, but shall span the lateral ditch.

STATE OF FLORIDA DEPARTMENT OF TRANSPORTATION
ROAD DESIGN

FENCE LOCATION

	Names	Dates
Designed By	HFW	02/65
Drawn By	HFW	02/65
Checked By	RLO	02/65
F.H.W.A. Approved:		06/18/74

Approved By Freddie Simmons
State Roadway Design Engineer

Revision No.	Sheet No.	Index No.
94	1 of 2	450

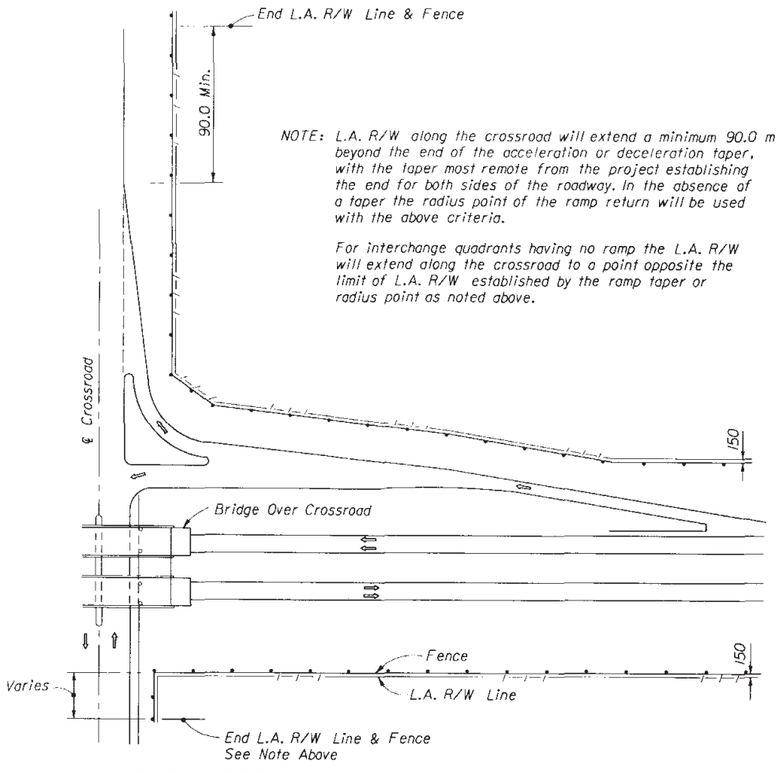

APPLIES TO BRIDGE OVER CROSSROAD AND CROSSROAD OVER FREEWAY (BRIDGE OVER CROSSROAD SHOWN)

FENCING TERMINALS AT RURAL INTERCHANGES

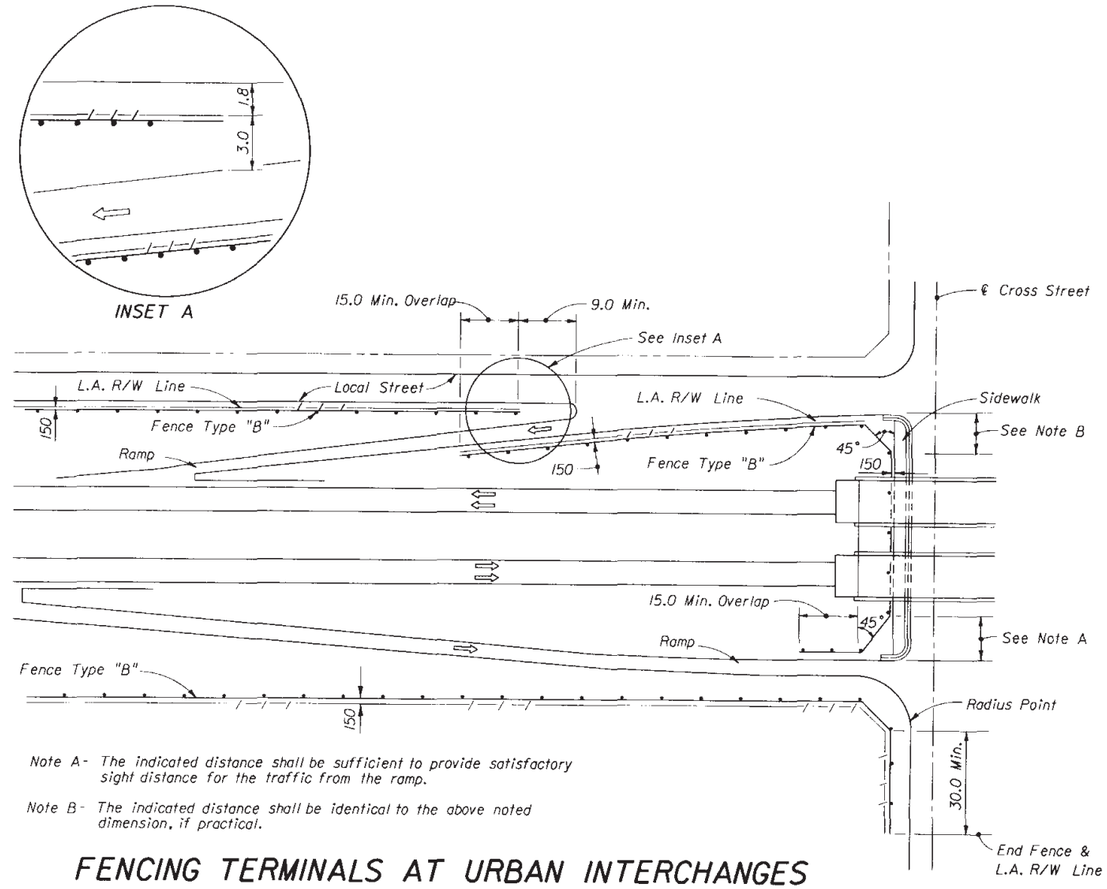

Note A- The indicated distance shall be sufficient to provide satisfactory sight distance for the traffic from the ramp.

Note B- The indicated distance shall be identical to the above noted dimension, if practical.

FENCING TERMINALS AT URBAN INTERCHANGES

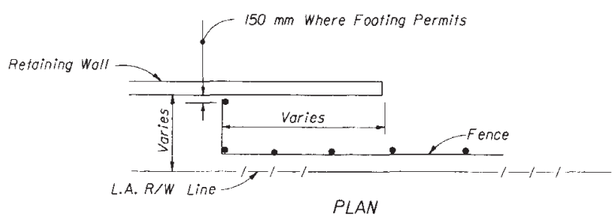

PLAN

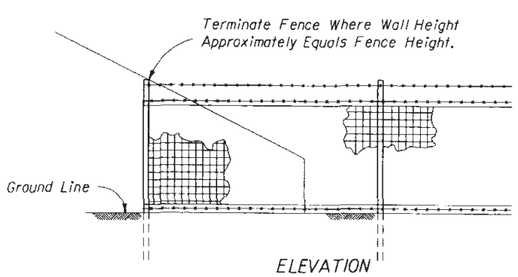

ELEVATION

FENCING TERMINALS AT RETAINING WALLS

STATE OF FLORIDA DEPARTMENT OF TRANSPORTATION
ROAD DESIGN

FENCE LOCATION

	Names	Dates
Designed By	HFW	02/65
Drawn By	HFW	02/65
Checked By	RLO	02/65
F.H.W.A. Approved:		06/18/74

Approved By Freddie Simmons
State Roadway Design Engineer

Revision No.	Sheet No.	Index No.
94	2 of 2	450

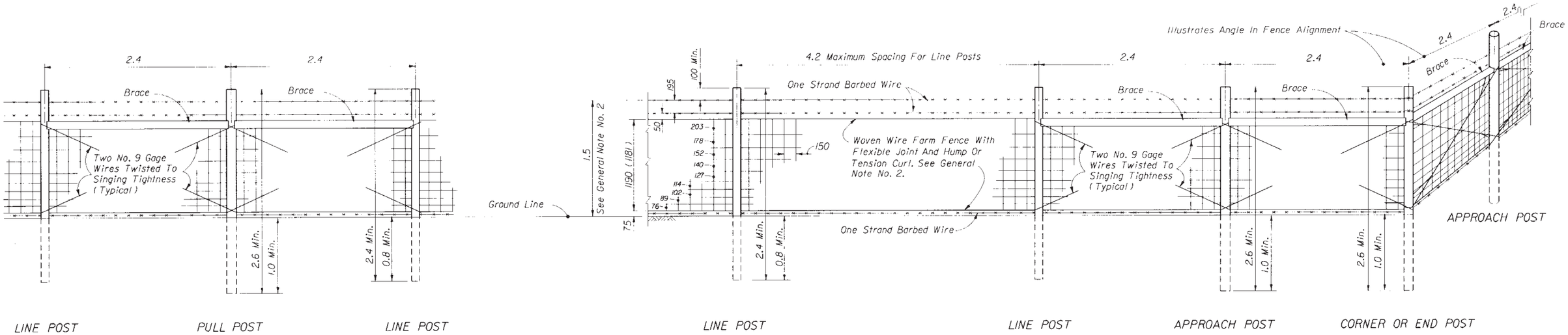

TIMBER POSTS ILLUSTRATED

GENERAL NOTES

1. This fence to be provided generally in rural areas. For supplemental information see Section 550 of the FDOT Specifications.
2. Fabric shall be woven wire, either galvanized steel, meeting the requirements of ASTM A116, No. 9 Farm, Design Number 1047-6-9, with Class 3 zinc coating, or aluminum coated steel, meeting the requirements of ASTM A584, No. 9 Farm, Design Number 1047-6-9, with a minimum coating weight of 120 g/m². For additional information see payment note below.
3. Fence shall be installed with wire side to private property except on horizontal curves greater than 3° the fence shall be installed so as to pull against all posts.
4. Posts and braces may be either steel, timber or concrete. Unless a specific post material is called for in the plans, the Contractor may elect to use either a single material or a combination of steel, timber or concrete materials. Line posts of one material may be used with corner, pull and end post assemblies of a different material. Line posts of only one optional material and pull post assemblies of only one optional material will be permitted between corner and end post assemblies. Within individual corner and end post assemblies only one optional material will be permitted.
5. Timber line posts are to be minimum 100 mm diameter. Timber corner, pull, approach and end posts are to be minimum 125 mm diameter. Timber braces are to be minimum 100 mm diameter.
   - (A) Staples for line posts to be 32 mm minimum length; for approach, corner and pull posts 38 mm minimum length. At approach, corner and pull posts, staple every line wire. At line posts, staple every line wire in top half and alternate line wires in bottom half. Staples shall be driven diagonally across the line wire with the points in separate grains.
   - (B) Connections between timber posts and braces to be provided by dowels as shown in fastener details.
   - (C) Wire to be wrapped and tied, as shown in the splice details, at the following locations:
     - (a) All end posts (b) Corner post, including the assemblies at veritcal breaks of 15° or more
     - (c) Pull posts where the wire is not spliced and pulled through the assembly; see General Note 16.
   - (D) For supplemental information see Section 954 of the Specifications.
6. Steel posts and braces shall be standard steel posts, galvanized at the rate of 610 g/m², together with necessary hardware and wire clamps and meeting the following requirements:
   - (A) Line posts: 2.45 m long; 1.98 kg/m; studded; anchor plate attached; with necessary clamps, etc.
   - (B) Approach posts: 64 x 64 x 6.4 angles, 2.45 m long; fabricated for attaching brace; with necessary hardware, clamps, etc.
   - (C) Pull, end and corner posts: 64 x 64 x 6.4 angles, 2.45 m long; fabricated for attaching brace; with necessary hardware, clamps, etc.
   - (D) Braces: 51 x 51 x 6.4 angles with necessary hardware and fabricated for attaching to post.
   - (E) The pull, corner, approach and end posts are to be set in concrete as per detail. (Also see Note No. 13)
   - (F) For supplemental information see Section 966 of the Specifications.
7. The Contractor, at his option, may use any suitable precast or prestressed concrete posts; however, approval by the Engineer, of posts not shown on this index, will be required prior to construction of the fence. Precast posts shall be Class I concrete. Prestressed posts shall be Class III concrete. Lengths of concrete posts to be as indicated for timber posts.
8. Aluminum post, braces and accessory framing hardware shall not be used unless the plans specifically detail their application or the Engineer specifically approves their incorporation in fence construction or repair. Aluminum framed gates are permitted as described in General Note 17.
9. The woven wire shall be attached to steel and concrete posts by a minimum of five tie wires. The single wire ties shall be applied to the top, bottom and three intermittent line wires. The ends of each tie wire shall have a minimum of two tight turns around the line wire. Tie wires shall be steel wire not less than 3 mm diameter, zinc coating Class 3, soft temper, in accordance with ASTM A641.
10. The woven wire shall be stretched only until one-half the tension curl has been pulled out of the line wires.
11. Posts to be set by driving or digging. If by digging, the posts shall be set at the center of the hole and the soil tamped securely on all sides.
12. Longer posts than those indicated above may be required by the plans or for deeper installations.
13. Concrete bases for angular steel posts (pull, corner, end and approach) shall be Class I as specified in Section 345 except that the requirements of 345-5.1, 10 & 11 shall not apply. Materials for Class I concrete may be proportioned by volume and/or by weight.
14. Pull post assemblies shall be installed at approximately 100 m centers except that this maximum interval may be reduced by the Engineer on curves where the radius is less than 580 m.
15. Corner post assemblies are to be installed at all horizontal and vertical breaks in fence of 15° or more.
16. A maximum length of 400 m of wire may be installed as a unit. For pulls through a pull post assembly the fabric shall be spliced by crimping sleeves only. Pulls through a corner post assembly will not be permitted.
17. Unless otherwise called for in the plans gates shall be commercially available metal swing gates assembled and installed in accordance with the manufacturers specifications as approved by the Engineer. Chain link swing gates in accordance with Index No. 452 may be substituted for metal swing gates as approved by the Engineer. Gate size is full opening width whether single leaf or double leaves. Payment for gates shall include the gate, single or double, all necessary hardware for installation and any additional length and/or size for posts at the opening. Gates shall be paid for under the contract unit price for Fence Gates, Type A, each.
18. For construction and pay purposes assemblies are defined as follows: End post assemblies shall consist of: one end post, one approach post, two braces, four diagonal tension wires and all necessary fittings and hardware. Pull post assemblies shall consist of: one pull post, two braces, four diagonal tension wires and necessary fittings and hardware. Corner post assemblies shall consist of: one corner post, two approach posts, four braces, eight diagonal tension wires and all necessary fittings and hardware.
19. This index details fencing that is constructed with farm fabric 1.18 m (1.2 m nominal) in height and with specific ground clearance and specific barbed wire spacings, and, is to be paid for under the contract unit price for Fencing, Type A, Mi. When the plans detail other combinations of materials or variation in dimensions, the fence shall be paid for under the contract unit price for Fencing, Type A, (__m Height), Mi. Fencing Type A, Mi, shall be inclusive of the lengths of pull, end and corner post assemblies but exclusive of gate widths.

   Assemblies shall be paid for as follows:
   Corner Post Assemblies, Each.
   Pull and End Post Assemblies, Each.

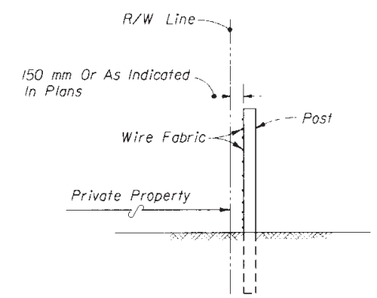

FENCE POSITION AT LOCATIONS WITHOUT FRONTAGE ROADS

(REFER TO DETAIL PLANS FOR FENCE POSITION AT LOCATIONS WITH FRONTAGE ROADS)

STATE OF FLORIDA DEPARTMENT OF TRANSPORTATION
ROAD DESIGN

FENCE TYPE A

	Names	Dates	Approved By Freddie Simmons, State Roadway Design Engineer		
Designed By					
Drawn By					
Checked By			Revision No.	Sheet No.	Index No.
F.H.W.A. Approved:		09/03/76	94	1 of 2	451

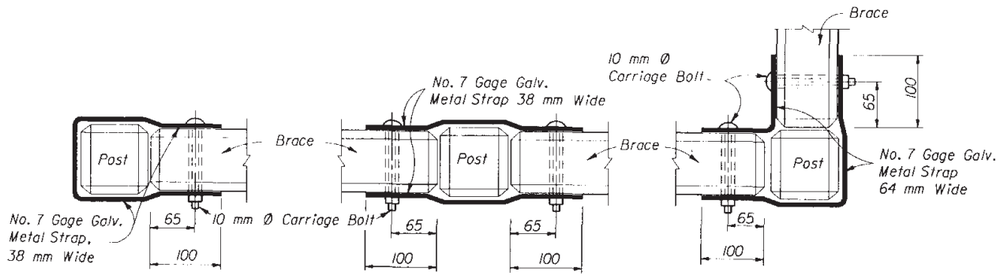

BRACE AND POST BRACE TO BRACE ON LINE BRACE TO BRACE AT CORNER

FASTENER FOR CONCRETE POST AND BRACES

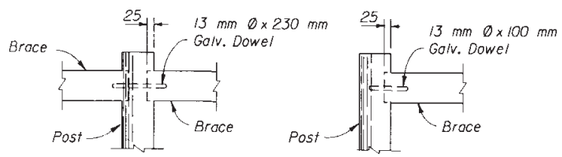

FASTENER FOR TIMBER POST AND BRACE

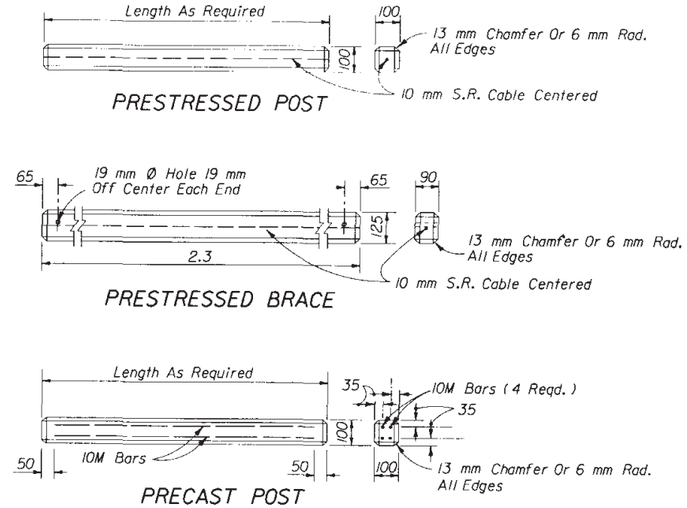

ALTERNATE CONCRETE POSTS AND BRACES

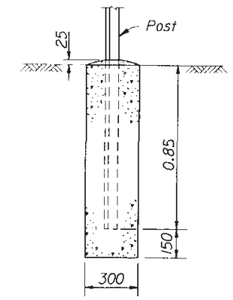

(Pull, Corner, End And Approach Posts)

CONCRETE BASE FOR ANGULAR STEEL POST

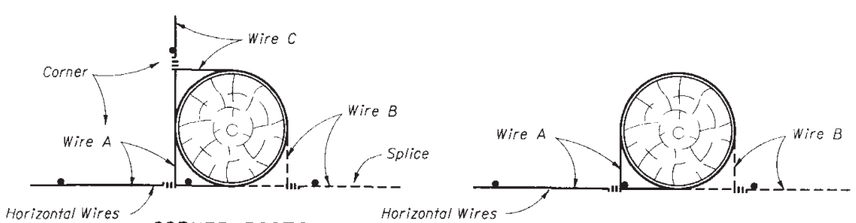

CORNER POSTS END AND PULL POSTS

Each horizontal wire to be wrapped around corner, end and pull posts and tied to same wire. See General Notes 5 and 15. Timber post illustrated. These methods also apply to steel and concrete post illustrations.

SPLICES

STATE OF FLORIDA DEPARTMENT OF TRANSPORTATION
ROAD DESIGN

FENCE TYPE A

	Names	Dates
Designed By		
Drawn By		
Checked By		

Approved By Freddie Simmons
State Roadway Design Engineer

Revision No.	Sheet No.	Index No.
94	2 of 2	451

F.H.W.A. Approved:

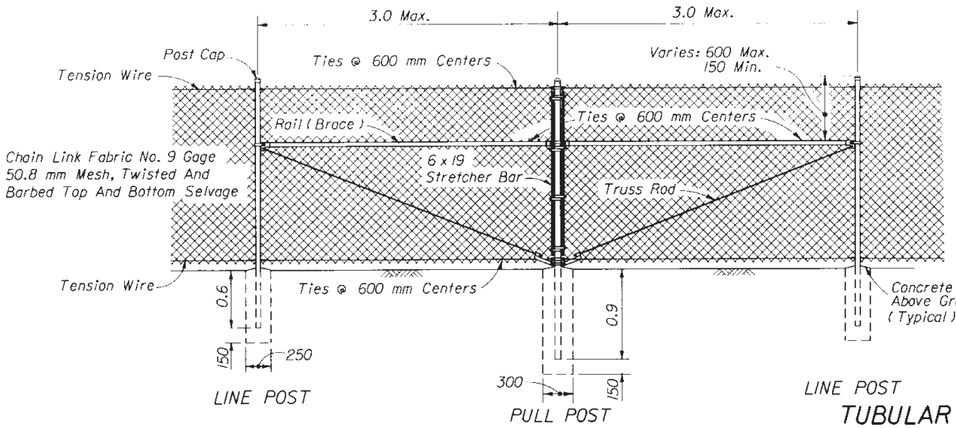

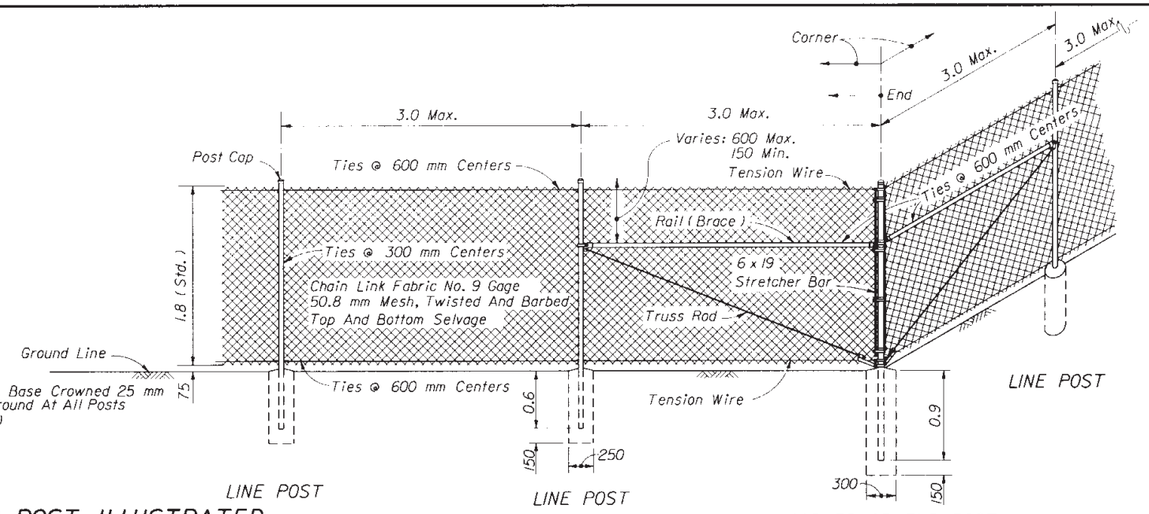

TUBULAR POST ILLUSTRATED

1. This fence to be used generally in urban areas.
2. For supplemental information refer to Sections 550 and 966 of FDOT Standard Specifications.
3. Chain link fabric, posts, rails, truss rods, tension wires, tie wires, stretcher bars, gates and all miscellaneous fittings and hardware shall meet the requirements of AASHTO M181 unless otherwise specified by this index. Stipulated AASHTO and ASTM signify current reference.
4. Fence Component Options:
   A. Line post options:
      (1) Galvanized steel pipe, Schedule 40-38 mm nominal dia. zinc galvanized at the rate of 549 g/m²: ASTM A53 Table X 2, ASTM F1083, and AASHTO M111.
      (2) Aluminum coated steel pipe-38 mm nominal dia. coated at the rate of 122 g/m²: Spec. Subarticle 966-1.5.
      (3) Aluminum alloy pipe- 50 mm nominal dia.: ASTM B241 or B221, Alloy 6063, T6.
      (4) Steel H-Beam- 48 x 41: Zinc Galv. 549 g/m²: AASHTO M111 and Detail.
      (5) Aluminum alloy H-Beam- 48 x 41: Detail.
      (6) Steel C- 48 x 41: Galv.: 549 g/m² zinc: AASHTO M111; or, 275 g/m² zinc- 5% aluminum-mischmetal: ASTM F1234 and Detail.
      (7) Resistance welded steel pipe- 38 mm nominal dia.: ASTM F669 light industrial fence; and, coatings for Group IC materials: ASTM F1234.
   B. Corner, end, and pull post options:
      (1) Galvanized steel pipe, Schedule 40- 50 mm nominal dia. zinc galvanized at the rate of 549 g/m²: ASTM A53 Table X 2, ASTM F1083, and AASHTO M111.
      (2) Aluminum coated steel pipe- 50 mm nominal dia. coated at the rate of 122 g/m²: Spec. Subarticle 966-1.5.
      (3) Aluminum alloy pipe- 64 mm nominal dia.: ASTM B241 or B221, Alloy 6063, T6.
      (4) Resistance welded steel pipe- 50 mm nominal dia.: ASTM F669 light industrial fence; and, coatings for Group IC materials: ASTM F1234.
   C. Rail options:
      (1) Galvanized steel pipe, Schedule 40- 32 mm nominal dia. zinc galvanized at the rate of 549 g/m²: ASTM A53 Table X 2, ASTM F1083, and AASHTO M111.
      (2) Aluminum coated steel pipe- 32 mm nominal dia. coated at the rate of 122 g/m²: Spec. Subarticle 966-1.5.
      (3) Aluminum alloy pipe- 32 mm nominal dia.: ASTM B241 or B221, Alloy 6063, T6.
      (4) Resistance welded steel pipe- 32 mm nominal dia.: ASTM F669 light industrial fence; and, coatings for Group IC materials: ASTM F1234.
   D. Chain link fabric options (50.8 mm mesh with twisted and barbed selvage top and bottom for all options):
      (1) AASHTO M181 Type I - Zinc Coated Steel, No. 9 gage (coated wire diameter), coated at the rate of 549 g/m² (M181 Class D 610 g/m² modified to 549 g/m²).
      (2) AASHTO M181 Type II - Aluminum Coated Steel, No. 9 gage (coated wire diameter), coated at the rate of 122 g/m².
      (3) AASHTO M181 Type IV - Polyvinyl Chloride (PVC) Coated Steel, No. 9 gage (coated core wire diameter), core wire-zinc coated steel. PVC coating: M181 Class A (either extruded or extruded and bonded) or Class B (bonded). See table right.
   E. Tension wire options:
      (1) No. 7 gage steel wire zinc galvanized at the rate of 549 g/m²: AASHTO M181.
      (2) Aluminum alloy wire conforming to the requirements of ASTM B211, Alloy 6061, Temper T89 or T94, with a wire diameter of 4.763 mm or larger.
      (3) No. 7 gage aluminum coated steel wire coated at the rate of 122 g/m²: AASHTO M181.
   F. Tie wire and hog ring options:
      (1) No. 9 gage steel wire zinc galvanized at the rate of 549 g/m².
      (2) Aluminum alloy wire conforming to the requirements of ASTM B211, Alloy 6061, Temper T89 or T94, with a wire diameter of 3.665 mm or larger.
      (3) No. 7 gage aluminum coated steel wire coated at the rate of 122 g/m².

GENERAL NOTES

5. Unless a specific material is called for in the plans the Contractor may elect to use either a single type of material or a combination of material types from the component options listed above. Combinations of optional materials are restricted as follows: (a) Only one fabric optional material will be permitted between corner and/or end post assemblies. (b).Only one line post optional material will be permitted between corner and/or end post assemblies. (c) Pull post assemblies shall be optional materials identical to either the line post optional material or the corner and end post assembly optional material; but, pull post assemblies shall be the same optional material between any set of corner and/or end post assemblies.

6. Concrete for bases shall be Class I as specified in Section 345 of the Standard Specifications except that the requirements contained in 345-5.1, 345-10 and 345-11 shall not apply. Materials for Class I concrete may be proportioned by volume and/or by weight.

7. Line posts are to be set in concrete as detailed above or by the following methods:
   (a) In accordance with special details and/or as specifically described in the contract plans and specifications.
   (b) In accordance with ASTM F567 Subsections 4.4 through 4.7 and 4.9 and 4.10 as approved by the Engineer.
   (c) In soils that are firm, well drained and suitable for full stable embedment any of the optional steel posts may be driven in locations approved by the Engineer. Driving will not be permitted in sandy soils. Driven posts shall be set to a minimum depth of 0.9 m for fences up through 1.8 m in height, and, for each 0.3 m of fence height above 1.8 m the posts shall be set an additional 0.15 m in depth. Posts shall be protected to prevent damage from driving. Damaged posts shall be repaired or removed and replaced as directed by the Engineer without additional cost to the Department.
   (d) Posts mounted on concrete structure or solid rock shall be mounted in accordance with the base plate detail "Fence Mounting On Concrete Endwalls And Retaining Wall", Sheet 2; or, by embedment in accordance with ASTM F567 Subsection 4.5.

   End, pull and corner post assemblies shall be set in concrete as detailed above for all soil conditions other than solid rock. Posts within assemblies that are located on concrete structures or solid rock shall be set by base plate or by embedment as prescribed under (b) above for line posts.

   Line and assembly posts set in concrete bases shall be set an additional 75 mm in depth for each 0.3 m of fence height greater than 1.8 m.

8. Pull posts shall be used at breaks in vertical grades of 15° or more, or at approximately 107 m centers except that this maximum interval may be reduced by the Engineer on curves where the radius is less than 580 m.

9. Corner posts are to be installed at all horizontal breaks in fence at 15° or more and as required at vertical breaks over 15° as determined by the Engineer.

10. When fence has an installed top of fabric height less than 1.8 m, knuckled top and bottom selvages shall be used unless the plans specifically identify locations for twisted selvage fabrics.

11. Unless sliding gates or special gates are called for in the plans, all gates shall be chain link swing gates meeting the material requirements described above as approved by the Engineer. Payment shall include the gates, single or double, all necessary hardware for installation and any additional length and/or size for posts at the opening. Gates shall be paid for under the contract unit price for Fence Gates, Type B, Each.

12. Line posts, tension wires, chain link fabric, tie wires, Class I concrete, and all miscellaneous fittings and hardware to be included in the cost for Fencing Type B, Mi. The standard 1.8 m high fence shall be paid for under the contract unit price for Fencing Type B, Mi. Fence having other height, line components and/or barbed wire attachments shall be paid for under the contract unit price for Fencing Type B (__m), Mi.

    Corner post assemblies shall consist of one corner post, two braces, two truss rods, and all necessary fittings and hardware as detailed above and shall be paid for under the contract unit price for Corner Post Assembly (Type B Fence), Each.

    Pull post assemblies shall consist of one pull post, two braces, two truss rods and all necessary fittings and hardware as detailed above and shall be paid for under the contract unit price for Pull Post Assembly (Type B Fence), Each.

    End post assemblies shall consist of one end post, one brace, one truss rod and all necessary fittings and hardware as detailed above and shall be paid for under the contract unit price for End Post Assembly (Type B Fence), Each.

TYPE IV VINYL COATED FABRIC								
Specification Section 966 And AASHTO M181 Table 4 Redefined As Follows								
Specified Diameter Of Metallic Coated Core Wire			Minimum Weight Of Zinc Coating		PVC Thickness Range			
					M181 Class A (Extruded Or Extruded And Bonded Coating)		M181 Class B (Bonded Coating)	
mm.	in.	gage	g/m²	oz/ft.²	mm.	in.	mm.	in.
3.76	0.148	9	92	0.30	0.38 to 0.64	0.015 to 0.025	0.15 to 0.25	0.006 to 0.010

STATE OF FLORIDA DEPARTMENT OF TRANSPORTATION
ROAD DESIGN

FENCE TYPE B

	Names	Dates
Designed By		
Drawn By		
Checked By		

Approved By Freddie Simmons
State Roadway Design Engineer

Revision No.	Sheet No.	Index No.
94	1 of 2	452

F.H.W.A. Approved: 10/06/83

/usr9/proj/stds/94met/00452s01.dgn

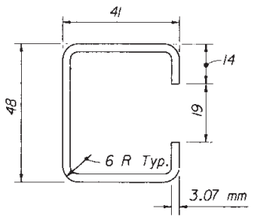

Galv. Wt. = 3.482 kg/m ±5%
Yield (Min.) 310 MPa

STANDARD WALL

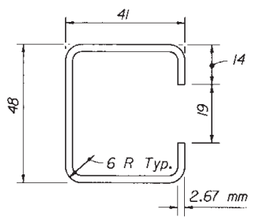

Galv. Wt. = 2.753 kg/m ±5%
Yield (Min.) 310 MPa

THINWALL

OPTIONAL "C" LINE POST FOR TYPE B FENCE

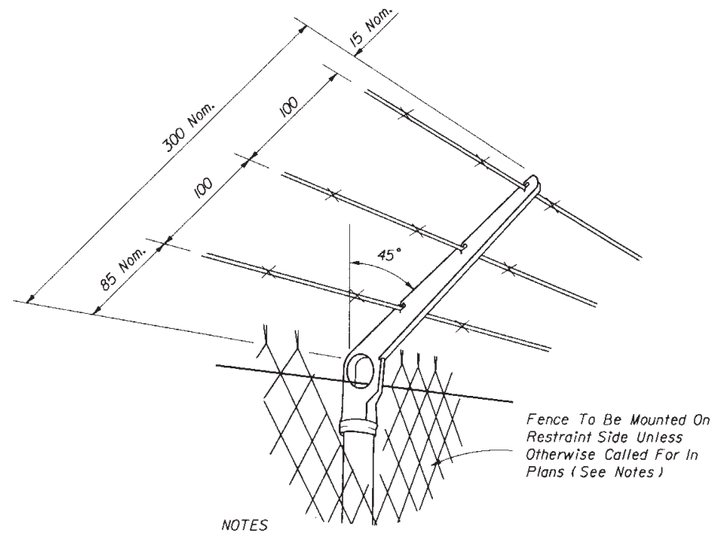

NOTES

Attachments to be used only when called for in the plans.
Attachments to extend in direction of restraint. Unless otherwise called for in plans, direction of restraint will be as follows:

(a.) Outward on limited access right of way line.
(b.) Outward on controlled access right of way line.
(c.) Outward from utilities and hazardous facilities located within highway right of way.
(d.) Outward from lateral ditches, outfalls, retention basins, canals, borrow areas and similar support facilities.
(e.) Inward on pedestrian ways.

The cap-arm shall be designed to provide a drive fit over the top of posts and to exclude moisture in posts with tubular sections.

Attachments to be paid for under the contract unit price for Fencing, Type B (With Barb Wire Attachment), Mi.

BARB WIRE ATTACHMENT

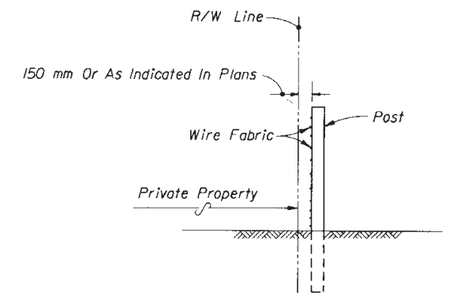

FENCE POSITION AT LOCATIONS WITHOUT FRONTAGE ROADS

(REFER TO DETAIL PLANS FOR FENCE POSITION AT LOCATIONS WITH FRONTAGE ROADS)

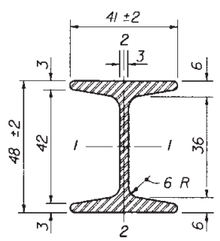

48 mm x 41 mm H-BEAM (STEEL)			(ALUM)	
Area = 467 mm²				
Galv. Wt. = 4.048 kg/m ±5%			1.354 kg/m ±5%	
	Axes		Axes	
	1-1	2-2	1-1	2-2
Moment Of Inertia	.428	.101	.428	.101
Section Modulus	.456	.124	.456	.124
Rad. Of Gyration	.779	.373	.779	.373
Surface Area	.237 m²/m		.237 m²/m	
Tensile Strength MPa (Min.)	552		207	
Yielding Point MPa (Min.)	331		173	

OPTIONAL H-BEAM LINE POST FOR TYPE B FENCE

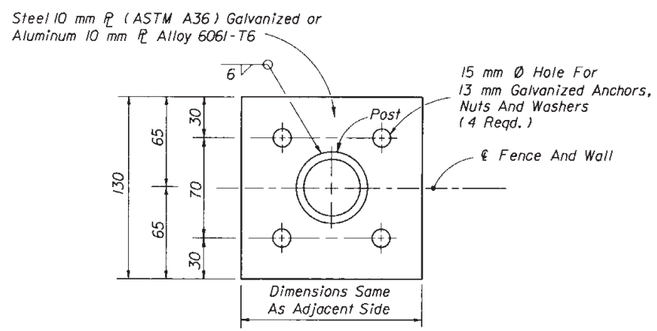

TOP VIEW
FOUR ANCHOR OPTION

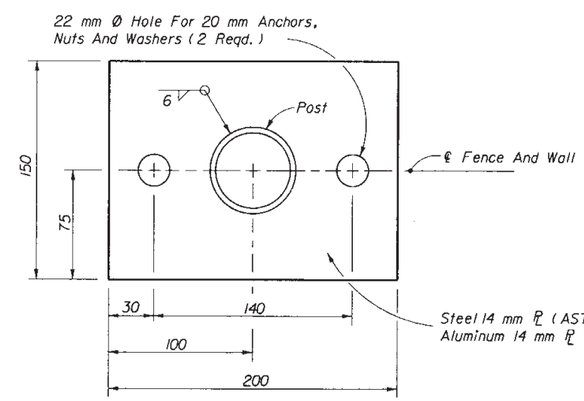

TOP VIEW
TWO ANCHOR OPTION

BASE PLATE AND ANCHOR NOTES:

1. Base plate identical for line, pull, end and corner posts and shall be considered an integral part of the respective posts for basis of payment.
2. Post to be plumbed by grout shim under base plate.
3. Anchors (Galvanized Steel):
   300 mm Cast In Place, 265 mm Embedment:
   Headed Bolts, U-Bolts or Cluster Plates.
   200 mm Adhesive Anchors, 150 mm Min. Embedment.*
   *Adhesive anchors shall be headless anchor bolts set in drilled holes with epoxy bonding compound Type J (Class IV) in accordance with the manufacturers specifications; drilled holes shall be 2 mm larger in diameter than the anchor bolt.
   Expansion Bolts Not Permitted.

FENCE MOUNTING ON CONCRETE ENDWALL AND RETAINING WALLS

STATE OF FLORIDA DEPARTMENT OF TRANSPORTATION
ROAD DESIGN

FENCE TYPE B

	Names	Dates
Designed By		
Drawn By		
Checked By		

Approved By Freddie Simmons
State Roadway Design Engineer

F.H.W.A. Approved:	Revision No.	Sheet No.	Index No.
	94	2 of 2	452

/usr9/proj/stds/94met/00452s02.

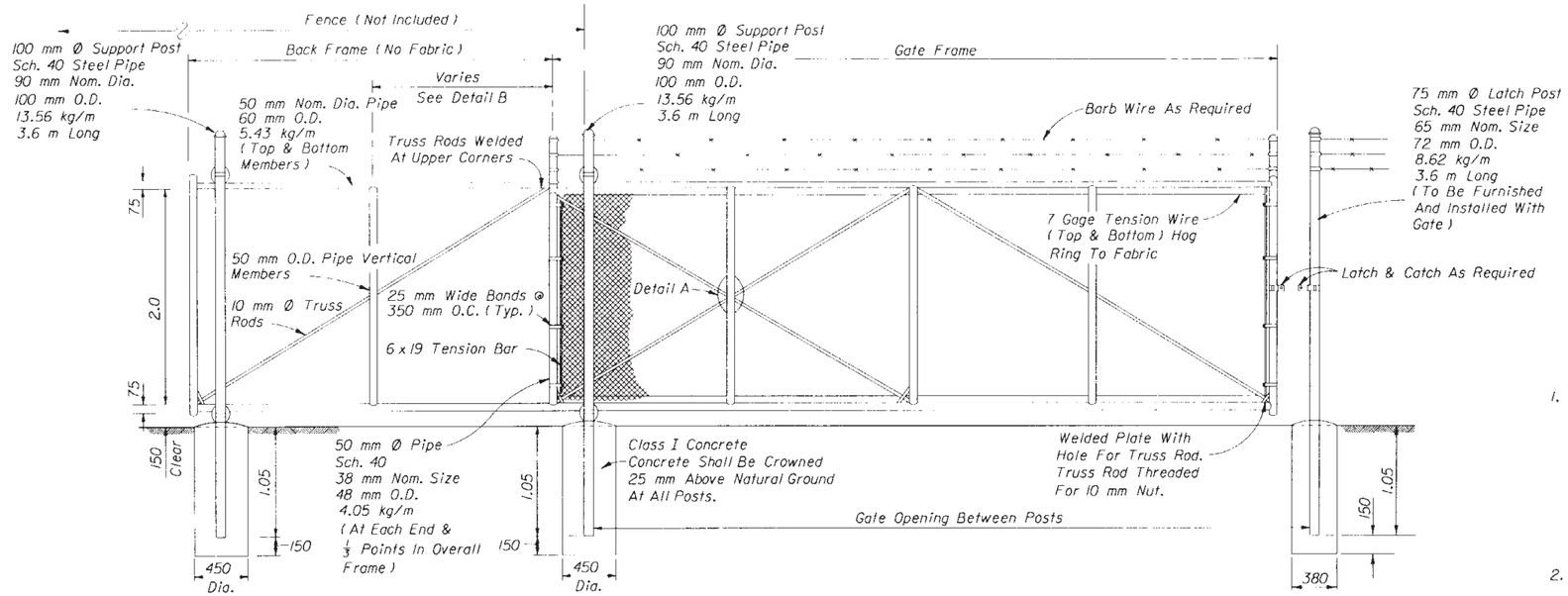

FRONT ELEVATION

GENERAL NOTES

1. The Contractor may substitute any equivalent cantilever slide gate approved by the Engineer.

   Extruded, rolled or formed components that provide equal strength and stability may be used in lieu of the pipe components shown; and, internal rollers may be used in lieu of the external roller units shown.

   Gate components shall meet or exceed the material requirements specified on Index No. 452.

2. Steel gate frame shall be fabricated prior to galvanizing, except that truss rods and truss rod plates may be fabricated following frame galvanizing provided surfaces damaged during welding are galvanized in accordance with Section 24 of AASHTO M36.

3. All fabric shall be knuckled top & bottom selvages.

4. Cost of all gate components shall be included in the contract unit price for Sliding Fence Gate (Cantilever), Each.

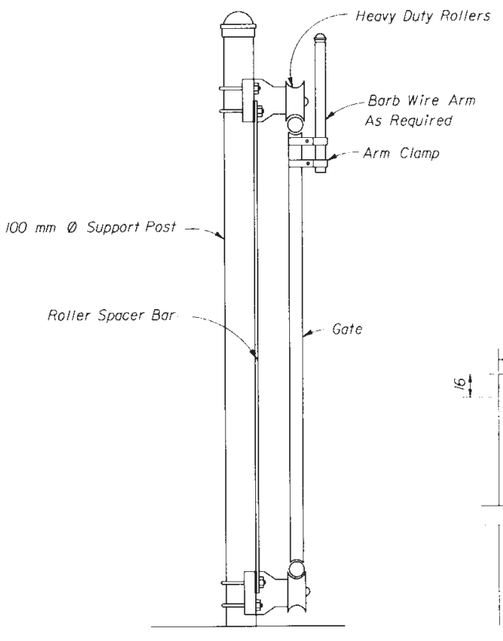

SUPPORT POST DETAIL

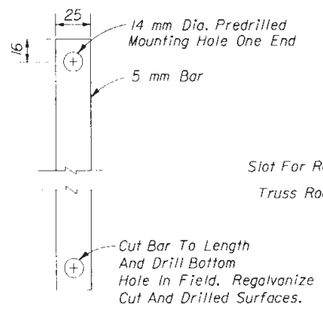

ROLLER SPACER BAR

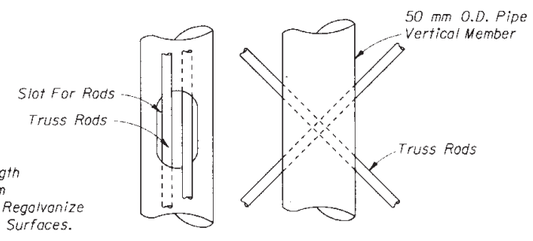

DETAIL A

GATE OPENING (m)	GATE FRAME (m)	BACK FRAME (m)
3.6	3.7	1.8
4.9	5.0	2.4
6.1	6.2	3.0
7.3	7.4	3.6

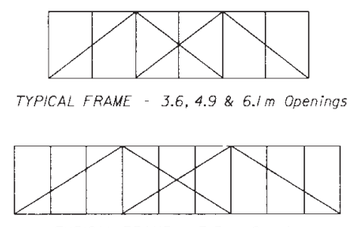

TYPICAL FRAME - 3.6, 4.9 & 6.1 m Openings

TYPICAL FRAME - 7.3 m Opening

DETAIL B

STATE OF FLORIDA DEPARTMENT OF TRANSPORTATION
ROAD DESIGN

CANTILEVER SLIDE GATE TYPE B FENCE

	Names	Dates
Designed By		
Drawn By	HDD	09/78
Checked By	LMF	09/78
F.H.W.A. Approved:		10/26/78

Approved By Freddie Simmons
State Roadway Design Engineer

Revision No.	Sheet No.	Index No.
94	1 of 1	453

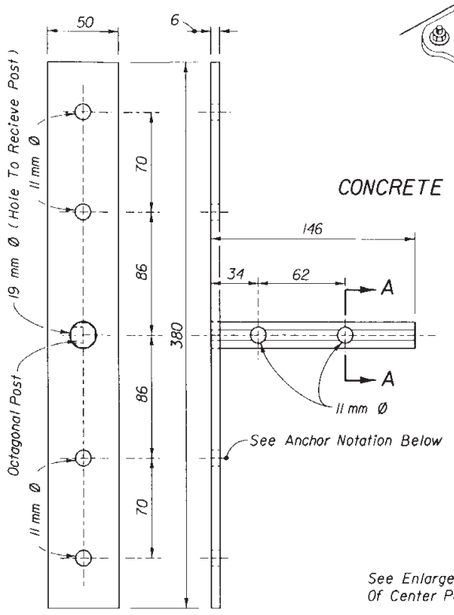

PLAN

FRONT VIEW

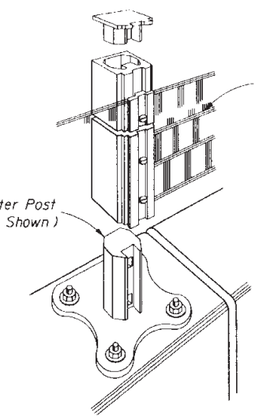

Screen
(Warp knitted 100% High Tenacity Polyester Yarn) (Height 600 mm, 700 mm Or 900 mm As Called for In Plans) (Weight Approx. 0.25 kg/m²) (Color Green Unless Otherwise Called For In Plans) (Resistance To Sunlight, Weather, Mildew, Rot, Insects, Acids, Alkalies, Salts, Sagging-Wet Or Dry Wrinkling And Creasing) (Installation Pull Load: 600 mm, 200 kg; 700 mm, 225kg and 900 mm, 250 kg) (Plastic Abrasion Clips Furnished By Screen Manufacturer Shall Be Attached To Bottom Of Screen Above Intermediate Guardrail Posts)

CONCRETE BARRIER WALL MOUNT

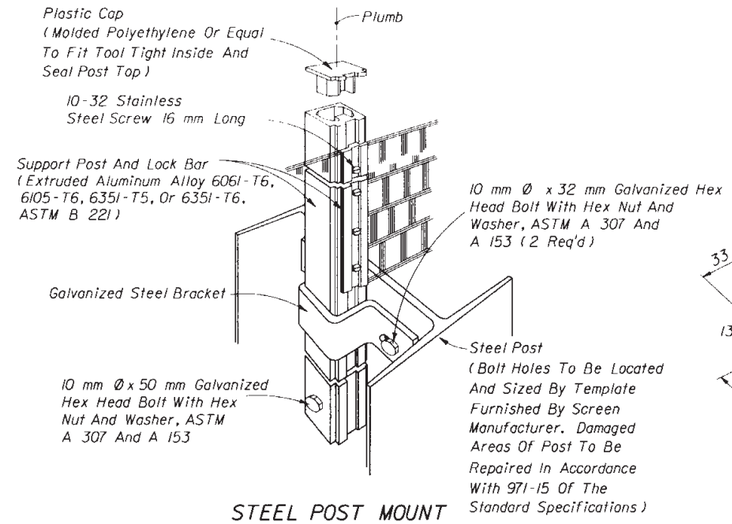

STEEL POST MOUNT

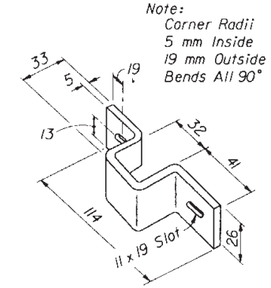

Galvanized Bracket
(Stock A 569 Steel) (ASTM A 153)

MOUNTING BRACKET

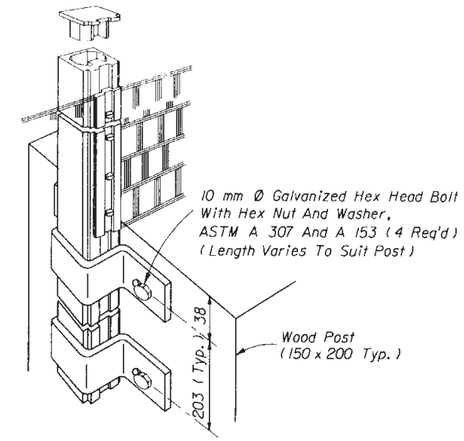

GUARDRAIL WOOD POST MOUNT

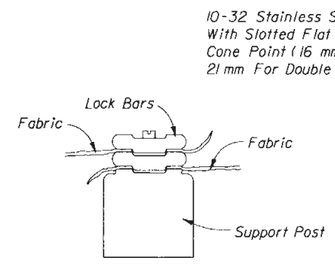

TOP VIEW

GLARE SCREEN SPLICE

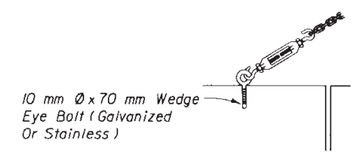

CONCRETE BARRIER WALL

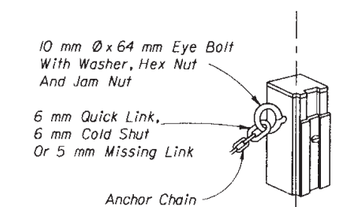

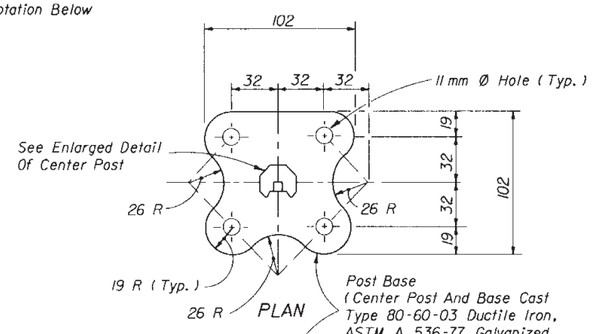

PLAN

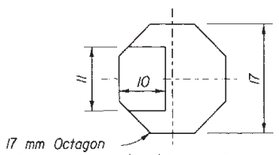

17 mm Octagon
(Refered To As 'Hex' By Manufacturer/Supplier)
A36 Steel

SECTION AA

Note: Galvanize Completed Assembly In Accordance With ASTM A153

OPTIONAL CENTER POST

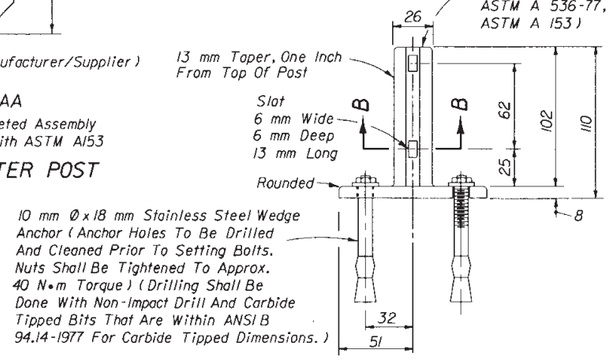

FRONT VIEW

OPTIONAL CENTER POST

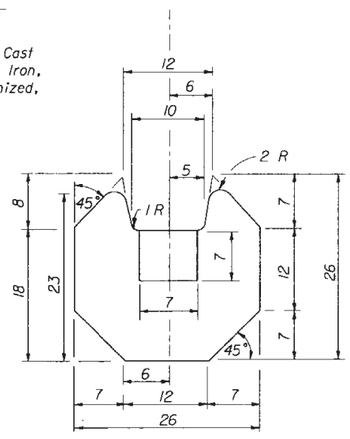

SECTION BB

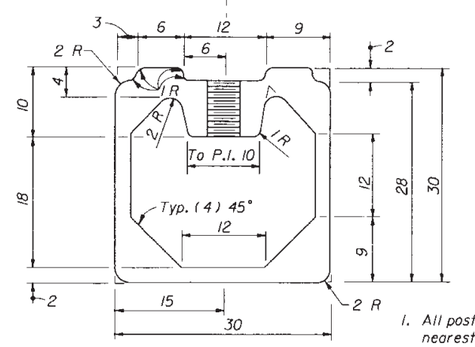

Note: Break Sharp Corners 1 mm R

SECTIONS

SUPPORT POST AND LOCK BAR

STEEL GUARDRAIL POST

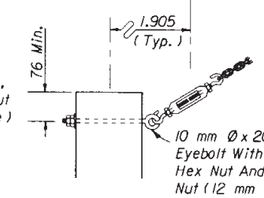

WOOD GUARDRAIL POST

Note:
Chain and accessories shall be galvanized in accordance with section 962-7 of the Standard Specifications. Damaged galvanized areas, including guardrail posts, shall be repaired in accordance with Sections 562 and 971-15 of the Standard Specifications.

CHAIN END ANCHORAGE

GENERAL NOTES

1. All posted dimensions are rounded to the nearest mm. For actual dimensions see the manufacturers specifications.
2. Cost of installation of screen, support posts, lock bars, leading and trailing end anchorages and all accessories shall be included in the contract unit price for Glare Screen (Knitted Polyester) Mi.

NOTICE

PARTS OF THIS GLARE SCREEN ASSEMBLY ARE PROPRIETARY DESIGNS. ANY INFRINGEMENT ON THE PROPRIETARY RIGHTS OF THE DESIGNER SHALL BE THE SOLE RESPONSIBILITY OF THE USER.

STATE OF FLORIDA DEPARTMENT OF TRANSPORTATION
ROAD DESIGN

GLARE SCREEN
KNITTED POLYESTER

	Names	Dates	Approved By Freddie Simmons, State Roadway Design Engineer		
Designed By					
Drawn By	HSD	02/80			
Checked By	JVG	02/80	Revision No.	Sheet No.	Index No.
F.H.W.A. Approved:		10/07/80	94	1 of 1	460

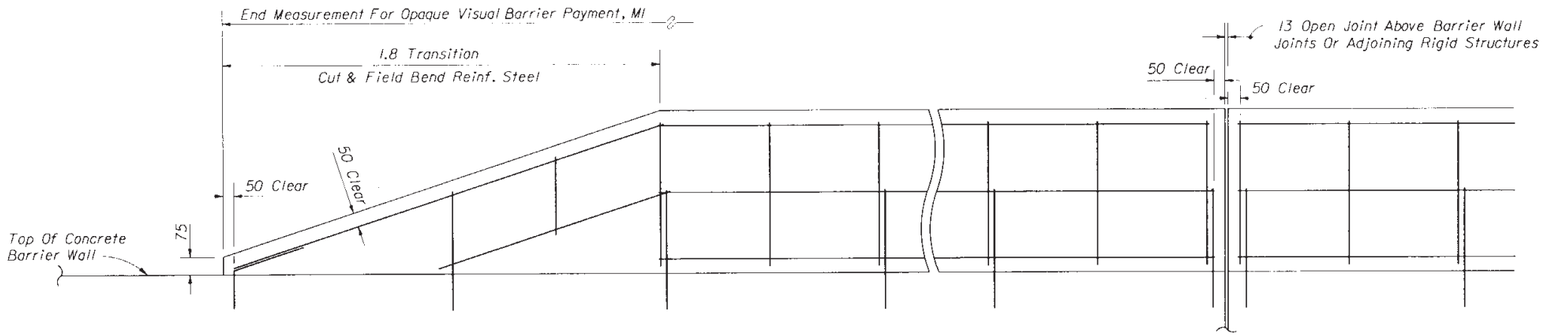

ELEVATION OF REINFORCEMENT AND DOWELING

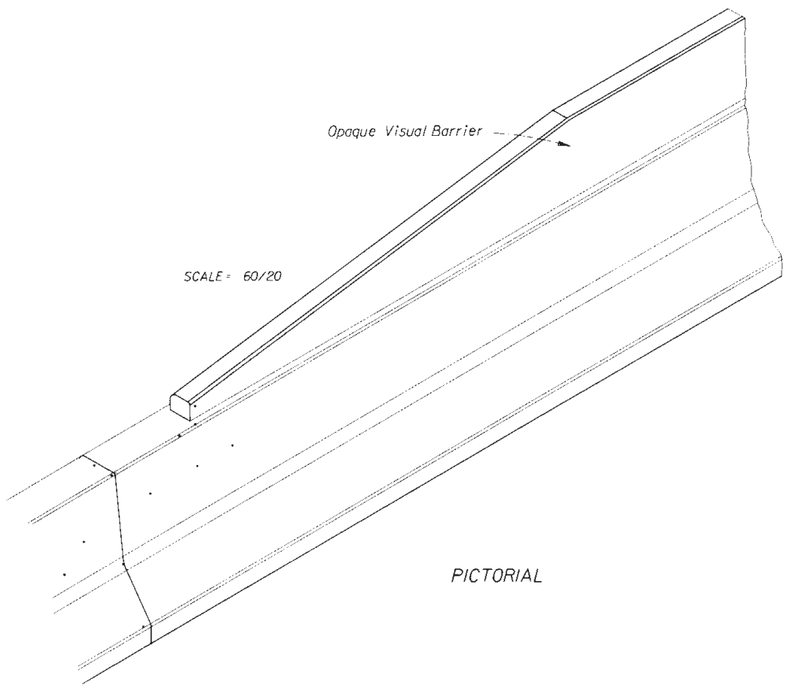

PICTORIAL

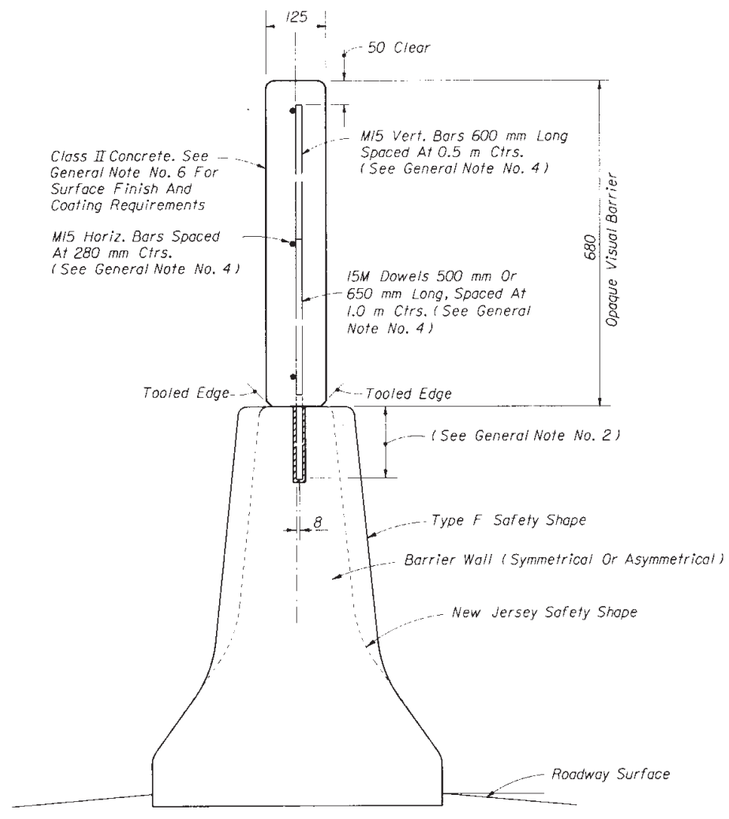

END VIEW

ESTIMATED QUANTITIES (Per Meter)	
Concrete	0.105 m^3
Reinforcing Steel	7.50 kg*
*7.76 kg With 650 mm Dowels	

GENERAL NOTES

1. The opaque visual barrier is intended to function as a visual screen, and is not intended to resist vehicle impact loads nor to restrain, contain or redirect vehicles or cargo. The barrier is designed to withstand zone wind loading and strikes by light debris; and, designed to yield to exceptional strikes by vehicles or cargo, and to contain ruptured segments of the screen when yielding to such strikes.

2. When the opaque visual barrier is constructed on an existing barrier wall, dowels shall be 500 mm in length, embedded 150 mm into the barrier wall and set with an approved chemical grout. Embedment holes shall be diameter, drilled to a depth 6 mm below the tip of the dowel unless greater depth is required to accept manufactured grout capsules.

   When the opaque visual barrier is constructed in conjunction with project concrete barrier walls, dowels may be set as described above, in either the drilled or preformed holes; or, placed when the barrier wall is cast. For dowels that are placed when the wall is cast, the dowel shall be 650 mm in length and embedded to a depth of 300 mm.

3. For both double and single faced concrete barrier walls the opaque visual barrier is to be located in the center of the top of the wall.

   For single faced barrier walls that are constructed around other vertical structure, the opaque visual barrier shall follow the alignments of only one of the walls and be centered atop that wall.

   For dual median barrier walls that follow differential profiles, the opaque visual barrier shall be constructed atop the wall with the higher elevation, unless conditions dictate otherwise. Lateral transitions or end overlaps for opaque visual barriers that alternate between dual walls shall be detailed in the plans.

   For median barrier walls that are divided when connecting to separated bridges, the opaque visual barrier shall be constructed atop the approach side barrier wall, unless differential profiles dictate locating the opaque visual barrier on the departure side barrier wall.

   Opaque visual barriers to be located on capped fills between dual barrier walls shall be detailed in the plans.

4. In lieu of the reinforcement shown the Contractor may substitute welded wire fabric equal to or better than that shown, when approved by the Engineer. Details shall be submitted with requests for substitution.

5. The Contractor may construct contiguous precast concrete panels in lieu of the cast-in-place opaque screen when approved by the Engineer. Panel design and method for anchorage to the barrier wall shall be detailed by shop drawings when requesting the Engineers approval.

   The Contractor may construct the opaque screen monolithically with the barrier wall, however, the screen design shall not be modified so as to cause the wall to be dynamically active from strikes on the screen; see design considerations in Note No. 1 above.

6. Exposed concrete surfaces shall have a Class 3 surface finish in accordance with Section 521 of the Standard Specification, unless other finish called for in the plans. The surfaces shall have a Class 5 Applied Finish Coating in accordance with Section 400 only when called for in the plans.

7. Payment for opaque visual barrier shall be full compensation for concrete, reinforcement, dowels, casting, placement, drilling, grouting, tooling, finishing and work incidental thereto, and shall be paid for under the contract unit price for Opaque Visual Barrier (Concrete) (680 mm Height), Ml.

STATE OF FLORIDA DEPARTMENT OF TRANSPORTATION
ROAD DESIGN

OPAQUE VISUAL BARRIER

	Names	Dates
Designed By	DCB/JVG	9/87
Drawn By	JBW	9/87
Checked By	DCB/JVG	9/87
F.H.W.A. Approved:		10/27/87

Approved By Freddie Simmons
State Roadway Design Engineer

Revision No.	Sheet No.	Index No.
94	1 of 1	461

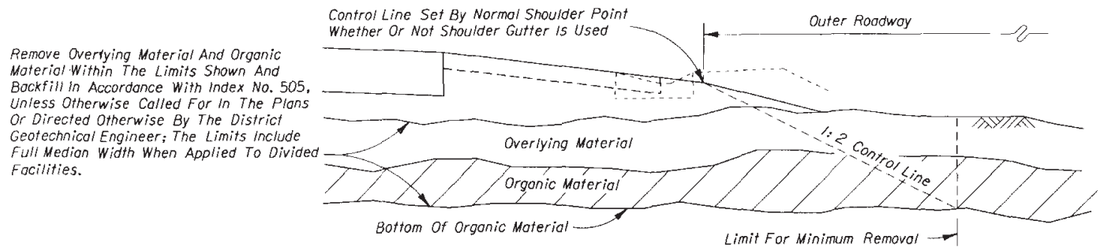

WITH OVERBURDEN - HALF SECTION

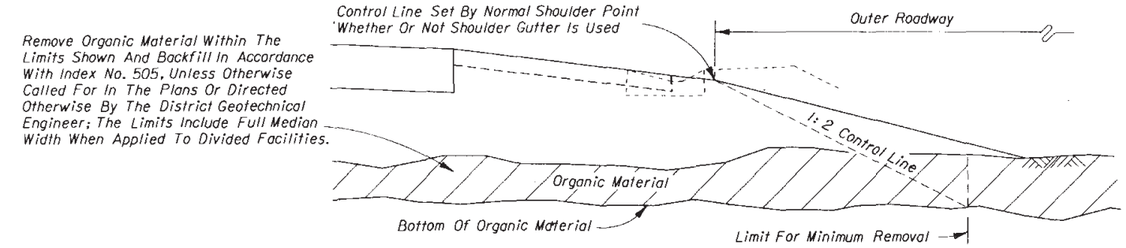

WITHOUT OVERBURDEN - HALF SECTION

IN RURAL CONSTRUCTION

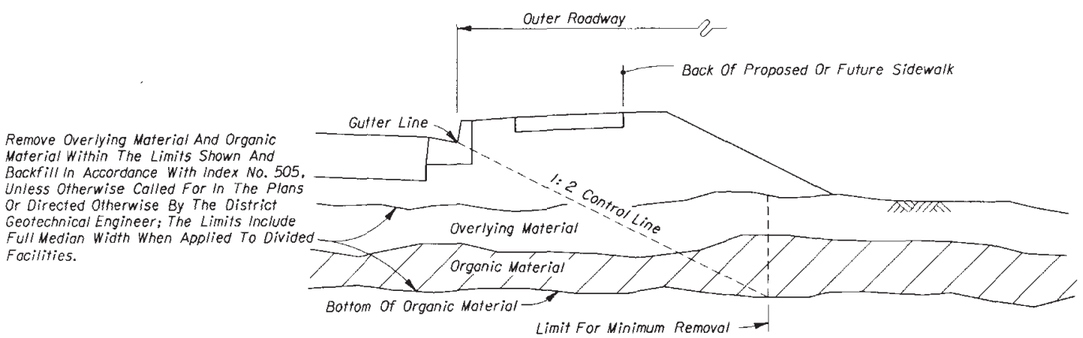

WITH OVERBURDEN - HALF SECTION

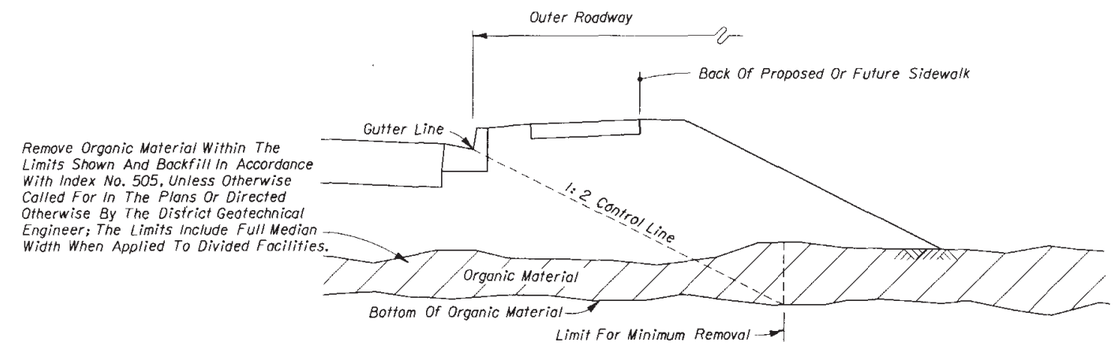

WITHOUT OVERBURDEN - HALF SECTION

IN URBAN CONSTRUCTION

REMOVAL OF ORGANIC MATERIAL

GENERAL NOTES

1. All details shown on this index for removal of organic and plastic materials apply unless otherwise shown on the plans.
2. Utilization of excavated materials shall be in accordance with Index No. 505.
3. Where organic or plastic material is undercut, backfill shall be made of suitable material in accordance with Index No. 505, unless otherwise shown on the plans.
4. The term "Plastic Material" used in this index in conjunction with removal of plastic soil is as defined under soil classifications for Plastic (P) and High Plastic (H) on Index No. 505.
5. The term "Organic Material" as used on this index is defined as any soil which has an average organic content greater than five (5.0) percent, or an individual organic content test result which exceeds seven (7.0) percent. Organic material shall be removed as shown on this index and the plans unless directed otherwise by the District Geotechnical Engineer.

   Average organic content shall be determined from the test results from a minimum of three randomly selected samples from each stratum. Tests shall be performed in accordance with FM 1-T267 on the portion of a sample passing the No. 4 sieve.
6. The normal depth of side ditches shall be 1.0 m below the shoulder point except in special cases.
7. In municipal areas, where underdrain is to be constructed beneath the proposed pavement, the grade of the underdrain filter material will not extend above the bottom of the stabilized section of the subgrade. Gradation of the filter material shall conform to FDOT specifications. Minimum grade on underdrain pipe shall be 0.2%.
8. See Index No. 506 for miscellaneous earthwork details.

DESIGN NOTES

1. At locations where organic material or other soft soil deposits persists to such depth that removal is impractical, the construction of a geosynthetic foundation over those soils should be considered. The Engineer of Record should request guidance from the District Geotechnical Engineer and solicit geosynthetic foundation designs from geosynthetic manufacturers when pursuing geosynthetic alternates.
2. The designer shall take into consideration the expectancy of roadway widening to the outside, and where widening is anticipated specify in the plans the limits of removal of organic and plastic materials necessary to accommodate anticipated widening.

STATE OF FLORIDA DEPARTMENT OF TRANSPORTATION
ROAD DESIGN

REMOVAL OF ORGANIC AND PLASTIC MATERIAL

	Names	Dates	Approved By Freddie Simmons, State Roadway Design Engineer
Designed By	GEOTECH	09/93	
Drawn By	HKH	09/93	
Checked By	BTD/FLS	09/93	
F.H.W.A. Approved:			

Revision No.	Sheet No.	Index No.
94	1 of 2	500

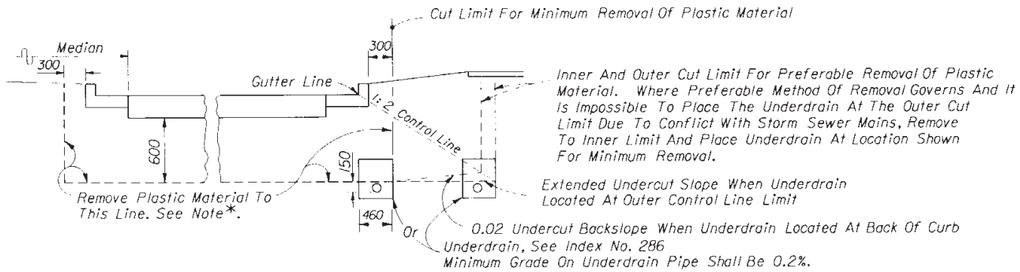

HALF SECTION

NOTES: Refer to roadway cross sections to determine whether minimum or preferable removal is used.

*Where frequency of median breaks indicates that it is impractical to leave plastic material in the median, the designer may elect to indicate total removal of this material. If during construction it becomes apparent, due to normal required construction procedures, that it is impractical to leave the plastic material in the median, total removal of this material shall be approved by the Engineer.

REMOVAL OF PLASTIC MATERIAL AND LOCATION OF UNDERDRAIN IN URBAN CONSTRUCTION

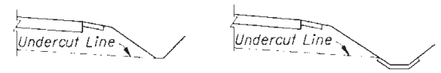

At locations where plastic material is being removed, the side ditches must be at least as deep as the undercut plane.

Where paved side ditches are used in areas of removal of plastic material, the top of the ditch pavement must be no higher than the undercut plane.

MISCELLANEOUS DETAILS

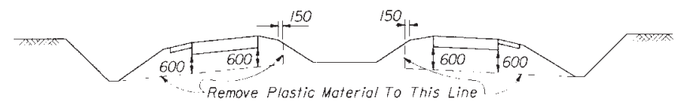

TYPICAL CUT SECTION ON TANGENT

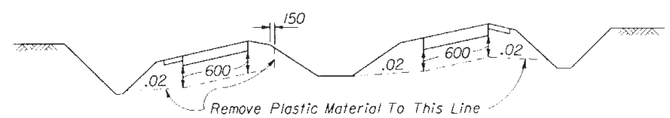

TYPICAL CUT SECTION ON SUPERELEVATION

REMOVAL OF PLASTIC MATERIAL ON INTERSTATE FACILITIES, FREEWAYS, DIVIDED ARTERIALS AND MAJOR COLLECTORS HAVING DEPRESSED MEDIANS

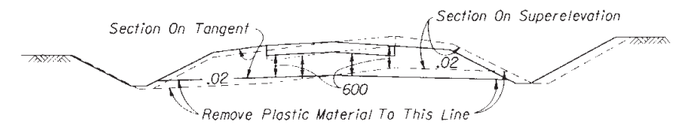

TYPICAL CUT SECTION

Note: When this detail is applied to minor collectors and local facilities, the undercut may be reduced to 460 mm.

REMOVAL OF PLASTIC MATERIAL ON DIVIDED FREEWAYS, ARTERIALS AND MAJOR COLLECTORS HAVING FLUSH MEDIANS, AND, ON UNDIVIDED ARTERIALS AND MAJOR COLLECTORS

REMOVAL OF PLASTIC MATERIAL

Note: For GENERAL NOTES see Sheet 1.

STATE OF FLORIDA DEPARTMENT OF TRANSPORTATION
ROAD DESIGN

REMOVAL OF ORGANIC AND PLASTIC MATERIAL

	Names	Dates
Designed By	KHH/WNL	05/91
Drawn By	HKH	05/91
Checked By	JVG/WNL	05/91
F.H.W.A. Approved:		

Approved By Freddie Simmons
State Roadway Design Engineer

Revision No.	Sheet No.	Index No.
94	2 of 2	500

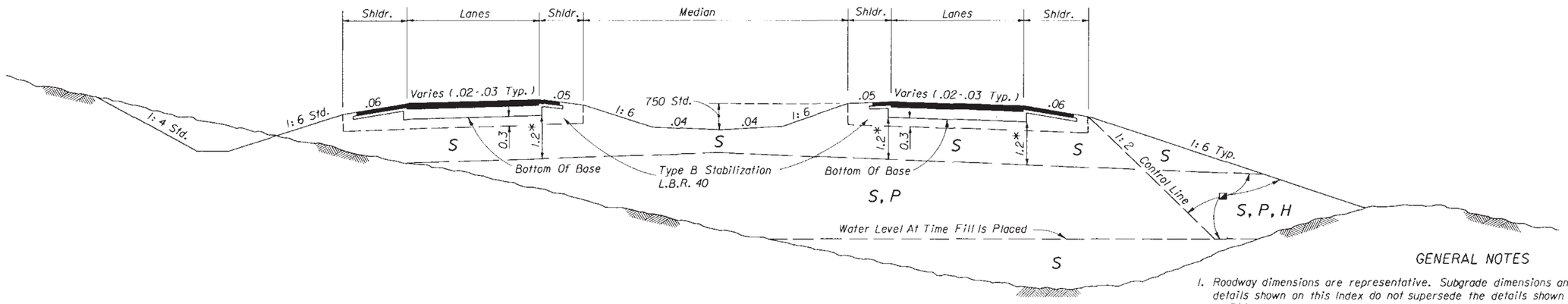

DIVIDED ROADWAYS

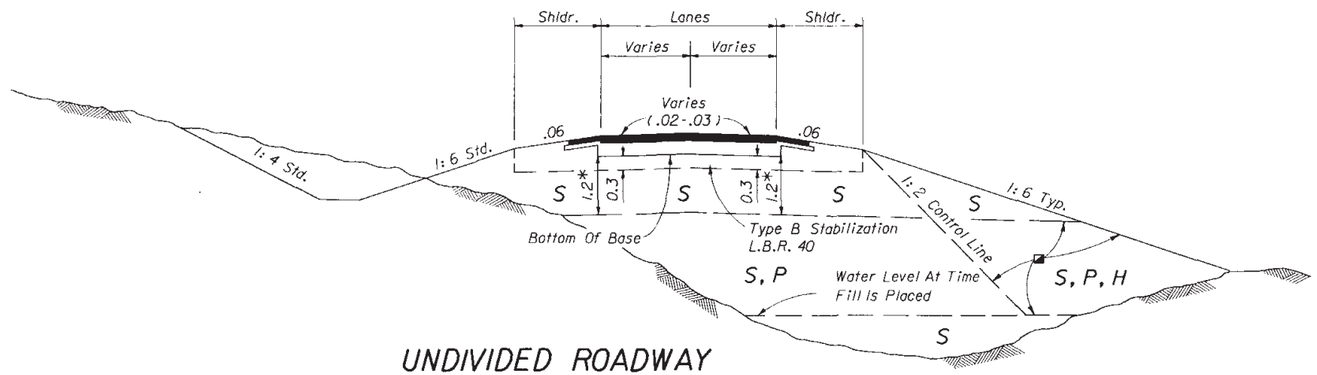

UNDIVIDED ROADWAY

SYMBOL	SOIL	CLASSIFICATION (AASHTO M-145)
S	Select	A-1, A-3, A-2-4 **
P	Plastic	A-2-5, A-2-6, A-2-7, A-4, A-5, A-6, A-7 (ALL WITH LL < 50)
H	High Plastic	A-2-5, A-2-7, A-5 Or A-7 (ALL WITH LL > 50)
M	Muck	A-8

Classification listed left to right in order of preference.

◪ See General Notes Nos. 4 & 5 for utilization of soils classified as organic material or muck.

** Certain types of A-2-4 material are likely to retain excess moisture and may be difficult to dry and compact. They should be used in the embankment above the water level existing at time of construction. They may be used in the subgrade portion of the roadbed when approved by the District Geotechnical Engineer.

* For cut sections this dimension may be reduced to 600 mm; see Index No. 500. For minor collectors and local facilities this dimension may be reduced to 450 mm.

FLEXIBLE PAVEMENT

GENERAL NOTES

1. Roadway dimensions are representative. Subgrade dimensions and control lines are standard. The details shown on this index do not supersede the details shown in the plans or on index Nos. 500 or 506.
2. Plastic (P) soils may be placed above the existing water level (at the time of construction) to within 1.2 m of the proposed base. It should be placed uniformly in the lower portion of the embankment for some distance along the project rather than full depth for short distances.
3. High Plastic (H) soils excavated within the project limits may be used in embankment construction as indicated on this index. High Plastic soils are not to be used for embankment construction when obtained from outside the project limits.
4. Select (S) soils having an average organic content of more than two and one-half (2.5) percent, or having an individual test value which exceeds four (4) percent, shall not be used in the subgrade portion of the roadbed.

   Select (S), Plastic (P), or High Plastic (H) soils having an average organic content of more than five (5) percent, or an organic content individual test result which exceeds seven (7) percent, shall not be used in the portion of embankment inside the control line, unless written authorization is provided by the District Geotechnical Engineer; these soils may be used for embankment construction outside the control line, unless restricted by the plans or otherwise specified in the plans, provided they can be compacted sufficently to sustain a drivable surface for operational vehicles as approved by the Engineer.

   Average organic content shall be determined from the test results from a minimum of three randomly selected samples from each stratum or stockpile of a particular material. Tests shall be performed in accordance with FM 1-T267 on the portion of a sample passing the 4.75 mm sieve.
5. Highly organic soils, composed primarily of partially decayed organic matter, often dark brown or black in color with an odor of decay, and sometimes fibrous, shall be designated as muck. Further, any stratum or stockpile of soil which contain pockets of highly organic material may be designated as Muck (M).

   Highly organic soils shall not be used within the subgrade or embankment portion of the roadbed, with the exception of muck used as a supplement to construct top soil as described in Section 162 of the FDOT Standard Specifications.

DESIGN NOTES

1. The designer shall take into consideration the expectancy of roadway widening to the outside, and where widening is anticipated, specify in the plans the utilization of Select (S), Plastic (P) and/or High Plastic (H) soils classified as organic material, in the embankment outside the control line.

STATE OF FLORIDA DEPARTMENT OF TRANSPORTATION
ROAD DESIGN

EMBANKMENT UTILIZATION

	Names	Dates
Designed By	GEOTECH	09/93
Drawn By	HSD	09/93
Checked By	BTD	09/93
F.H.W.A. Approved:		04/23/14

Approved By Freddie Simmons
State Roadway Design Engineer

Revision No.	Sheet No.	Index No.
94	1 of 3	505

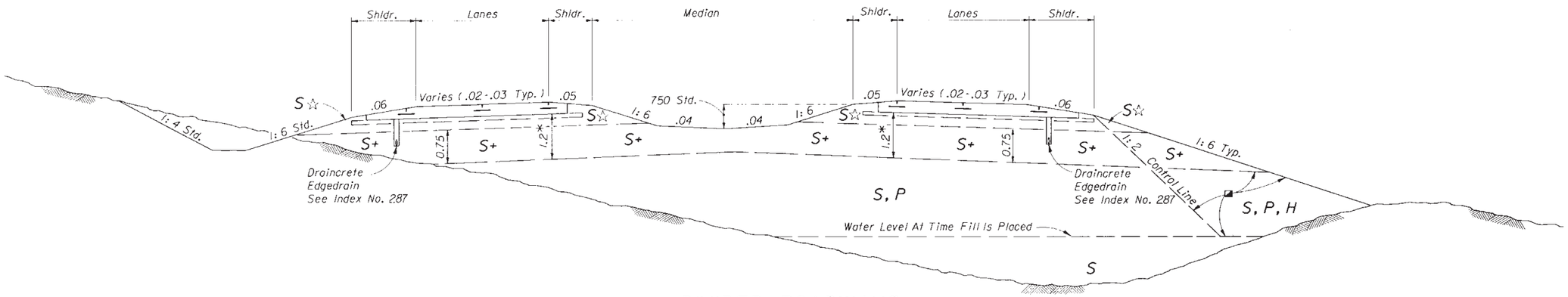

DIVIDED ROADWAYS

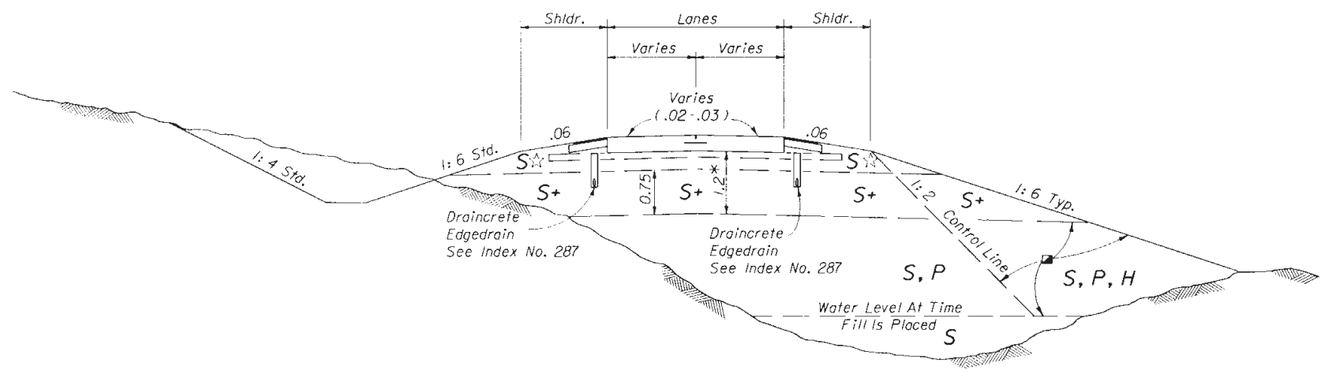

UNDIVIDED ROADWAY

SYMBOL	SOIL	CLASSIFICATION (AASHTO M-145)
S	Select	A-1, A-3, A-2-4 **
S ☆	Special Select	A-3 WITH LESS THAN 5% FINES PASSING THE 75 µm SIEVE WITH #57 COARSE AGGREGATE MIXED INTO TOP 150 mm
S+	Special Select	A-3 Only
P	Plastic	A-2-5, A-2-6, A-2-7, A-4, A-5, A-6, A-7 (ALL WITH LL < 50)
H	High Plastic	A-2-5, A-2-7, A-5 Or A-7 (ALL WITH LL > 50)
M	Muck	A-8

Classification listed left to right in order of preference.

◪ See General Notes Nos. 4 & 5 for utilization of soils classified as organic material or muck.

** Certain types of A-2-4 material are likely to retain excess moisture and may be difficult to dry and compact. They should be used in the embankment above the water level existing at time of construction. They may be used in the subgrade portion of the roadbed when approved by the District Geotechnical Engineer.

* For cut sections this dimension may be reduced to 600 mm; see Index No. 500. For minor collectors and local facilities this dimension may be reduced to 450 mm.

RIGID PAVEMENT - ALTERNATE #1

STATE OF FLORIDA DEPARTMENT OF TRANSPORTATION
ROAD DESIGN

EMBANKMENT UTILIZATION

	Names	Dates
Designed By	HWD	09/93
Drawn By	HSD	09/93
Checked By	BTD	09/93
F.H.W.A. Approved:		04/23/74

Approved By Bruce Dietrich
State Pavement Design Engineer

Revision No.	Sheet No.	Index No.
94	2 of 3	505

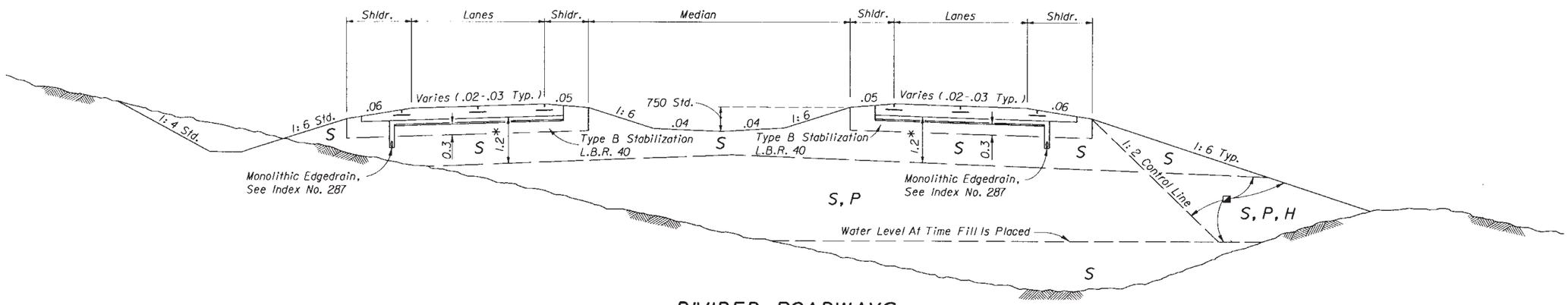

DIVIDED ROADWAYS

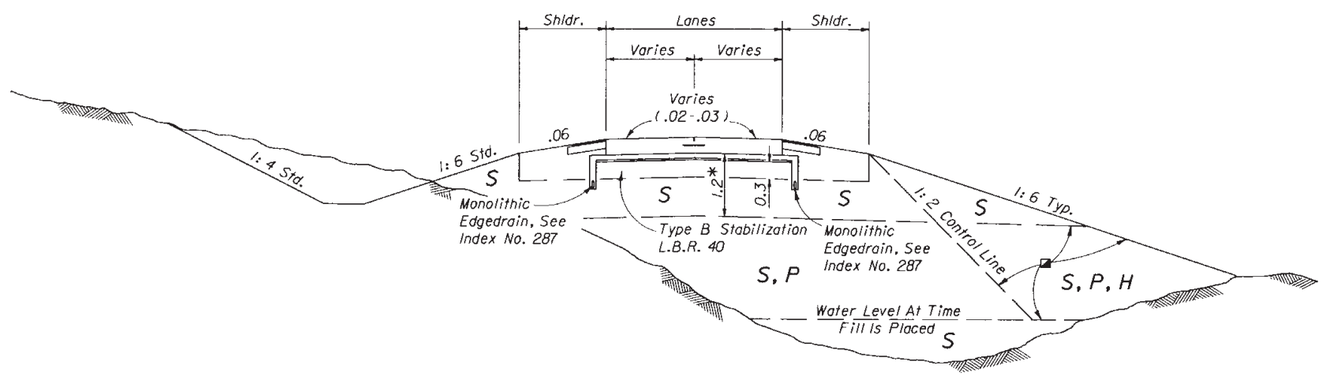

UNDIVIDED ROADWAY

DESIGN NOTE

1. Concrete pavement is to be placed over 100 mm of Asphalt Treated Permeable Base (ATPB) or Cement Treated Permeable Base (CTPB) as identified in the plans. This will be placed on an aggregate separator layer using 20 mm of Type S-III Structural Course. This will be placed on a working platform using 300 mm of Type B Stabilization.

SYMBOL	SOIL	CLASSIFICATION (AASHTO M-145)
S	Select	A-1, A-3, A-2-4 **
P	Plastic	A-2-5, A-2-6, A-2-7, A-4, A-5, A-6, A-7 (ALL WITH LL < 50)
H	High Plastic	A-2-5, A-2-7, A-5 Or A-7 (ALL WITH LL > 50)
M	Muck	A-8

Classification listed left to right in order of preference.

◪ See General Notes Nos. 4 & 5 for utilization of soils classified as organic material or muck.

** Certain types of A-2-4 material are likely to retain excess moisture and may be difficult to dry and compact. They should be used in the embankment above the water level existing at time of construction. They may be used in the subgrade portion of the roadbed when approved by the District Geotechnical Engineer.

* For cut sections this dimension may be reduced to 600 mm; see Index No. 500. For minor collectors and local facilities this dimension may be reduced to 450 mm.

RIGID PAVEMENT - ALTERNATE #2

STATE OF FLORIDA DEPARTMENT OF TRANSPORTATION
ROAD DESIGN

EMBANKMENT UTILIZATION

	Names	Dates
Designed By	HMD	09/93
Drawn By	HSD	09/93
Checked By	BTD	09/93
F.H.W.A. Approved:		04/23/14

Approved By Bruce Dietrich
State Pavement Design Engineer

Revision No.	Sheet No.	Index No.
94	3 of 3	505

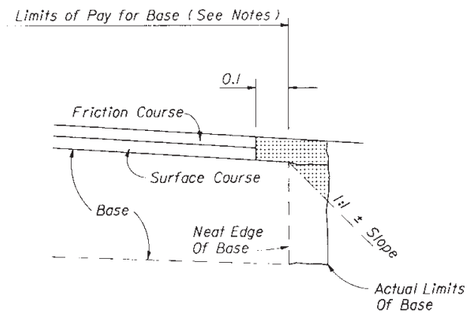

NOTES

1. All material in the shaded area is excess base to be removed.
2. The cost for removal of excess base material shall be included in the contract unit price for base.
3. Payment for base shall be calculated using normal width.

REMOVAL OF EXCESS BASE MATERIAL

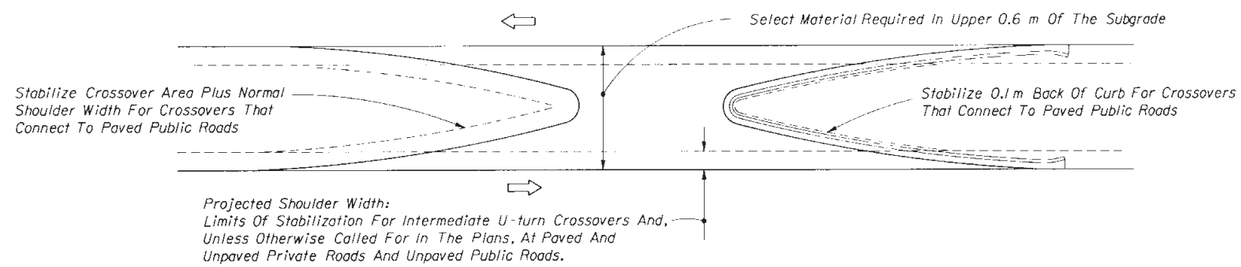

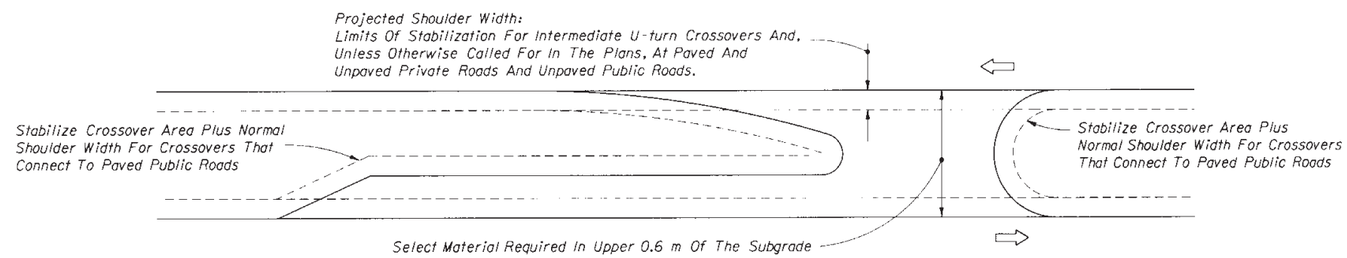

NOTES

1. When the median has curb or curb and gutter, stablize 0.1 m back of curb.
2. When the median has shoulder with no curb or curb and gutter, stablize to normal shoulder width.
3. See the details above for stablizing requirements at crossroads.
4. Stabilize entire area under all paved traffic islands.
5. Stabilize full width under all traffic separators.
6. Select material as defined on Index No. 505. For minor collectors and local facilities the depth of select material thickness may be reduced from 0.6 m to 0.45 m.

MEDIAN STABILIZING DETAILS

STATE OF FLORIDA DEPARTMENT OF TRANSPORTATION
ROAD DESIGN

MISCELLANEOUS EARTHWORK DETAILS

	Names	Dates
Designed By	RL/WNL	05/91
Drawn By	HKH	05/91
Checked By	JVG/WNL	05/91
F.H.W.A. Approved:		

Approved By Freddie Simmons
State Roadway Design Engineer

Revision No.	Sheet No.	Index No.
94	1 of 1	506

SUPERELEVATION RATES (e) FOR RURAL HIGHWAYS, URBAN FREEWAYS AND HIGH SPEED URBAN HIGHWAYS

$e_{max.} = 0.10$

CHARTED VALUES

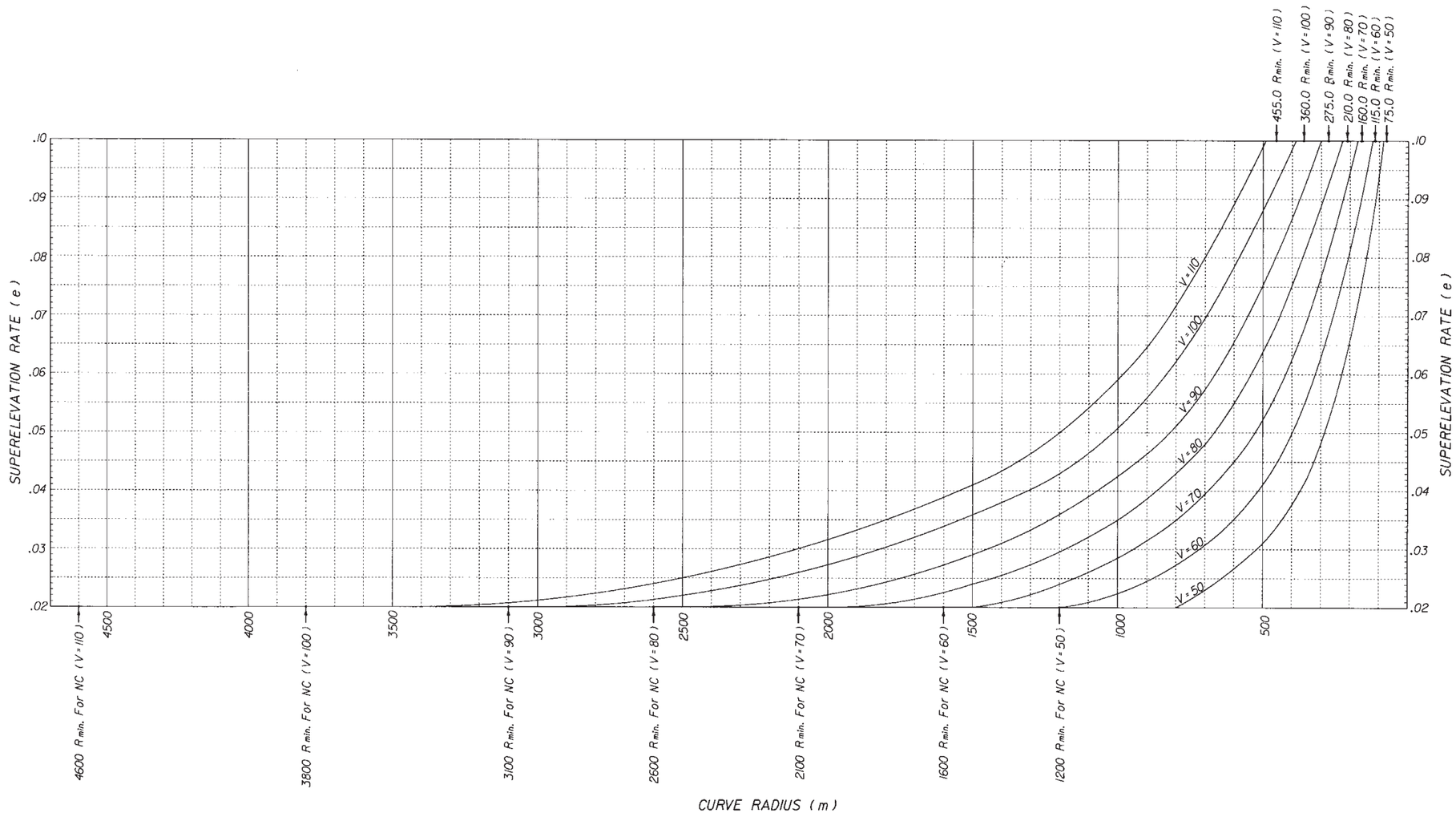

TABULATED VALUES

Radius (m)	Design Speed (km/h) 50	60	70	80	90	100	110
4600	NC	NC	NC	NC	NC	NC	NC
4500							RC
4400							
4300							
4200							
4100							
4000							
3900							
3800						NC	
3700						RC	
3600							
3500							
3400							
3300							
3200							RC
3100					NC		.021
3000					RC		.021
2900							.022
2800						RC	.022
2700						.021	.023
2600				NC		.021	.024
2500				RC		.022	.025
2400						.023	.026
2300					RC	.024	.027
2200					.021	.025	.029
2100			NC		.021	.026	.030
2000			RC		.022	.027	.032
1900				RC	.023	.029	.033
1800				.021	.024	.030	.035
1700				.021	.026	.032	.037
1600		NC		.023	.027	.034	.039
1500		RC	RC	.024	.029	.036	.041
1400			.021	.026	.031	.038	.043
1300			.022	.027	.033	.040	.046
1200	NC	RC	.024	.030	.036	.043	.050
1100	RC	.021	.026	.032	.039	.046	.054
1000		.022	.029	.035	.043	.051	.059
900		.025	.032	.039	.046	.056	.065
800	RC	.027	.035	.043	.051	.062	.072
700	.023	.031	.040	.048	.057	.070	.080
600	.027	.035	.045	.055	.066	.078	.089
500	.031	.041	.052	.064	.075	.088	.099
450	.034	.045	.057	.069	.081	.093	0.10 R min = 455.0
400	.038	.050	.063	.075	.087	.099	
350	.042	.056	.069	.082	.093	0.10 R min = 360.0	
300	.048	.063	.077	.089	.10		
250	.056	.071	.085	.096	0.10 R min = 275.0		
200	.066	.081	.095	0.10 R min = 210.0			
175	.072	.087	.10				
150	.078	.093	0.10 R min = 160.0				
125	.086	.099					
100	.094	0.10 R min = 115.0					
	0.10 R min = 75.0						

NC = Normal Crown
RC = Reverse Crown (0.02)

$e_{max.} = 0.10$

SUPERELEVATION FOR RURAL HIGHWAYS, URBAN FREEWAYS AND HIGH SPEED URBAN HIGHWAYS

STATE OF FLORIDA DEPARTMENT OF TRANSPORTATION
ROAD DESIGN

SUPERELEVATION
RURAL HIGHWAYS, URBAN FREEWAYS AND HIGH SPEED URBAN HIGHWAYS

	Names	Dates
Designed By	TLH	7/94
Drawn By	KHK	7/94
Checked By	JVG	7/94

Approved By Freddie Simmons
State Roadway Design Engineer

F.H.W.A. Approved: 7/7/75

Revision No.	Sheet No.	Index No.
94	1 of 3	510

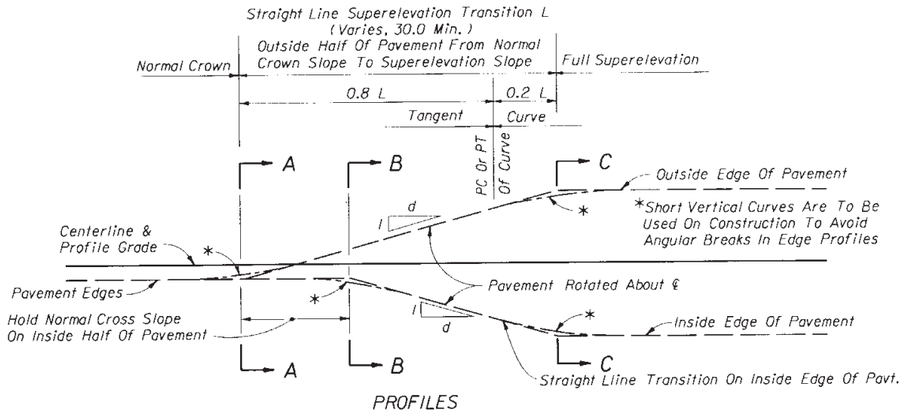

PROFILES

SLOPE RATIOS FOR SUPERELEVATION TRANSITIONS			
SECTION	DESIGN SPEED, km/h		
	70-80	90-100	110
	1: d		
2 & 4 Lane	1: 200	1: 225	1: 250
6 Lane	1: 160	1: 180	1: 200
8 Lane	1: 150	1: 170	1: 190

The length of superelevation transition is to be determined by the relative slope between the travel way edge of pavement and the profile grade, except that the minimum length of transition shall be 30.0 m.

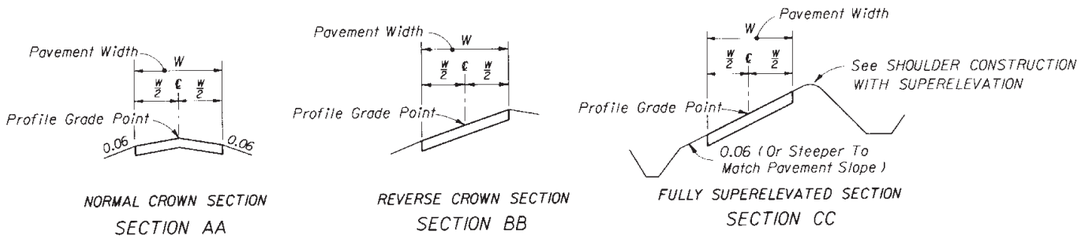

2-LANE, 4-LANE OR 6-LANE PAVEMENT, NO MEDIAN

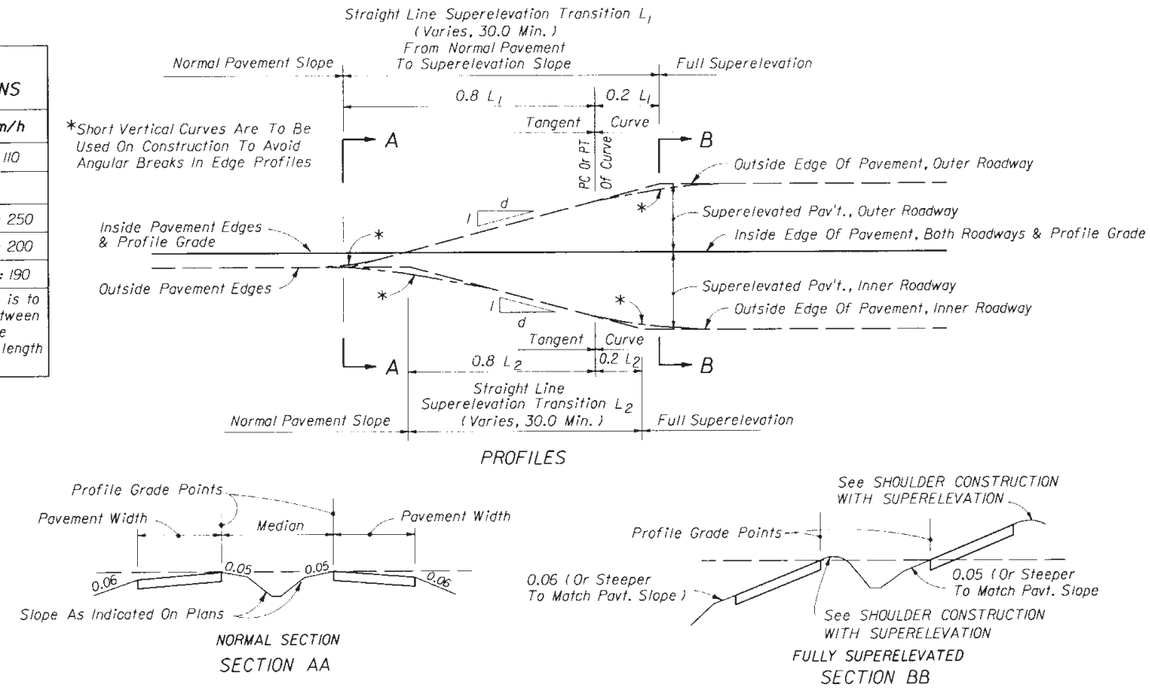

PROFILES

4-LANE OR 6-LANE PAVEMENT WITH MEDIAN

THESE TRANSITION DETAILS ARE TO APPLY IN ALL CASES, EXCEPT UNDER THE FOLLOWING CONDITIONS:

1. Curves of insufficient length.
2. Insufficient tangent length between curves.
3. Deficient transition distance between a curve and other control point(s).
4. At PCC's or PRC's (Runoff rates are applicable).

Transitions for these exceptions are to be as detailed in the plans.

SUPERELEVATION TRANSITIONS

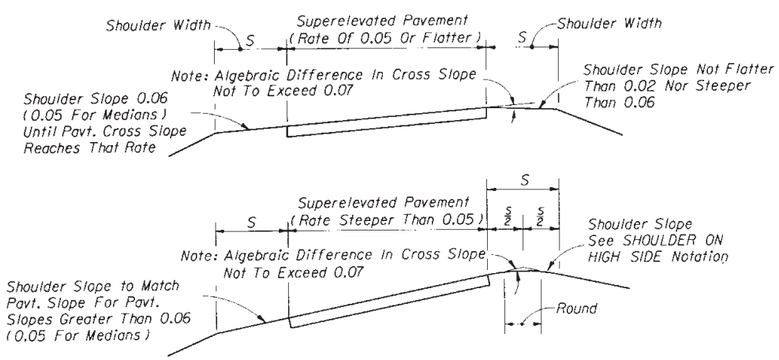

SHOULDER ON HIGH SIDE: A shoulder slope of 0.06 downward from the edge of pavement will be maintained until a 0.07 break in slope at the pavement edge is reached due to superelevation of the pavement. As the pavement superelevation increases, the 0.07 break in slope will be maintained and the shoulder flattened until the shoulder slope reaches the minimum of 0.02 downward from the edge of pavement. Any further increase in pavement superelevation will necessitate sloping the inside half of the shoulder toward the pavement and the outer half outward, both at 0.02.

These slopes will be held with further increase in pavement superelevation until the maximum break of 0.07 at the pavement edge is again reached. This maximum break will then be held and shoulder slopes steepened with additional superelevation.

SHOULDER ON LOW SIDE: Maintain 0.06 drop across inside shoulder until pavement cross slope reaches 0.06. For pavement cross slopes greater than 0.06, shoulder to have same slope as pavement.

NOTE: These details apply to both paved and grassed shoulders. For median shoulders use 0.05 in lieu of 0.06.

SHOULDER CONSTRUCTION WITH SUPERELEVATION

GENERAL NOTES

1. For superelevation Urban Highways and High Speed Urban Streets, see Index No. 511.

SUPERELEVATION SECTIONS AND PROFILES FOR RURAL HIGHWAYS, URBAN FREEWAYS AND HIGH SPEED URBAN HIGHWAYS

STATE OF FLORIDA DEPARTMENT OF TRANSPORTATION
ROAD DESIGN

SUPERELEVATION
RURAL HIGHWAYS, URBAN FREEWAYS AND HIGH SPEED URBAN HIGHWAYS

	Names	Dates
Designed By		
Drawn By	HFW	5/65
Checked By	LMF	10/74

Approved By Freddie Simmons
State Roadway Design Engineer

F.H.W.A. Approved: 7/7/75

Revision No.	Sheet No.	Index No.
94	2 of 3	510

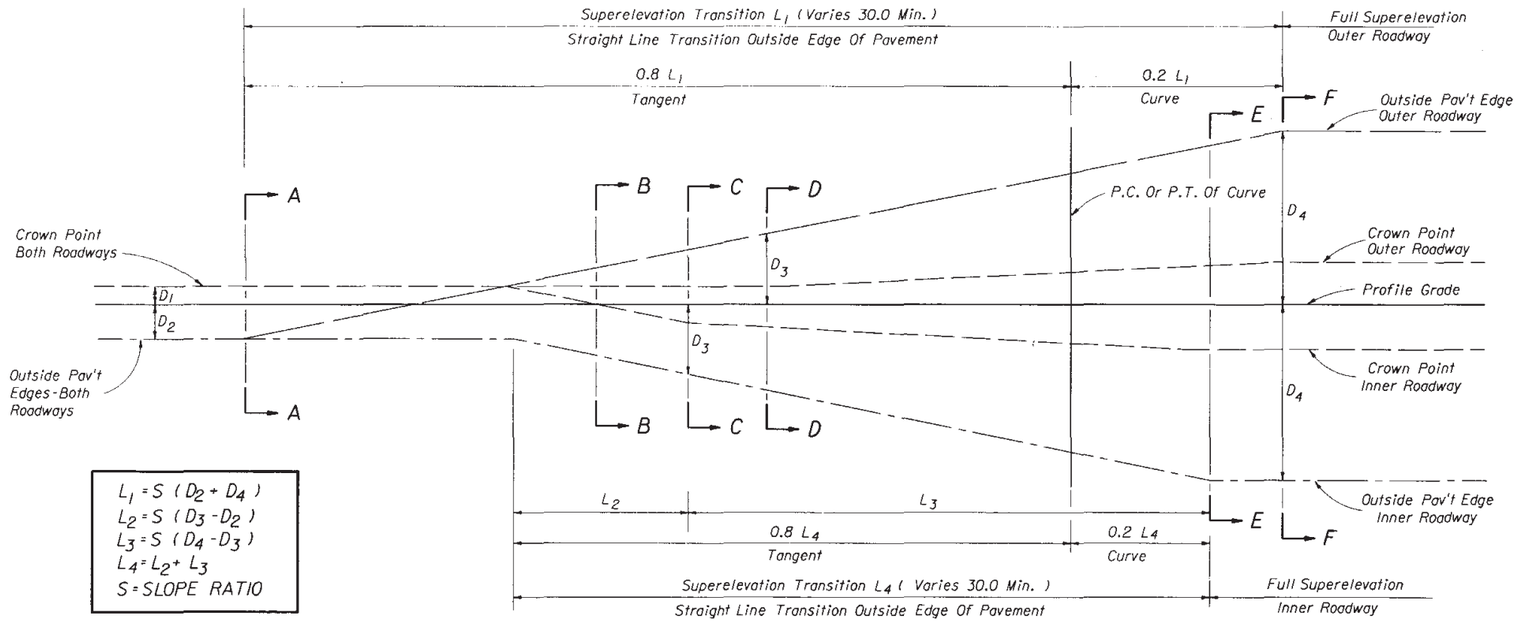

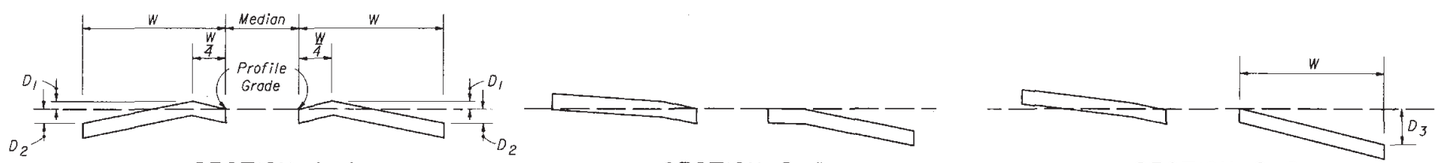

SECTION A-A

NORMAL CROWNED SECTION

SECTION B-B

SUPERELEVATION SECTION LT. & RT.

SECTION C-C

SUPERELEVATION SECTION LT.
PLANE INCLINED SECTION RT.

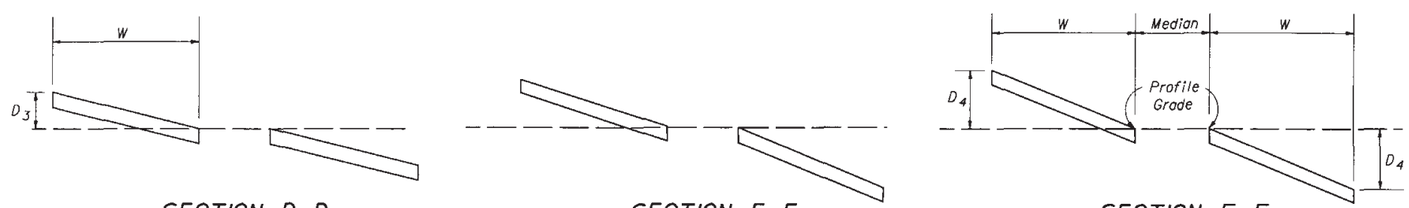

SECTION D-D

PLANE INCLINED SECTION LT.
SUPERELEVATION TRANSITION RT.

SECTION E-E

SUPERELEVATION TRANSITION LT.
FULL SUPERLEVATION RT.

SECTION F-F

FULL SUPERELEVATION LT. & RT.

8-LANE PAVEMENT WITH ONE LANE SLOPED TO MEDIAN

STATE OF FLORIDA DEPARTMENT OF TRANSPORTATION
ROAD DESIGN

SUPERELEVATION
RURAL HIGHWAYS, URBAN FREEWAYS AND HIGH SPEED URBAN HIGHWAYS

	Names	Dates
Designed By	WAL	08/77
Drawn By	LMF	08/77
Checked By	WAL	08/77
F.H.W.A. Approved:		11/02/77

Approved By Freddie Simmons
State Roadway Design Engineer

Revision No.	Sheet No.	Index No.
94	3 of 3	510

SUPERELEVATION RATES (e) FOR URBAN HIGHWAYS AND HIGH SPEED URBAN STREETS

e_{max} = 0.05

TABULATED VALUES

Radius R (m)	Design Speed (km/h) 50	60	70	80
1000+	NC	NC	NC	NC
900				NC
800				RC
700				
600			NC	
500			RC	
450				
400		NC		RC
350		RC		0.023
300			RC	0.036
275	NC		0.021	0.046
250	RC		0.029	Rmin. =
225		RC	0.041	267.9
200		0.020	Rmin. =	
175		0.031	213.4	
150		0.046		
125	RC	Rmin. =		
100	0.034	146.3		
	Rmin. = 87.2			

NC = Normal Crown
RC = Reverse Crown (0.02)

CHARTED VALUES

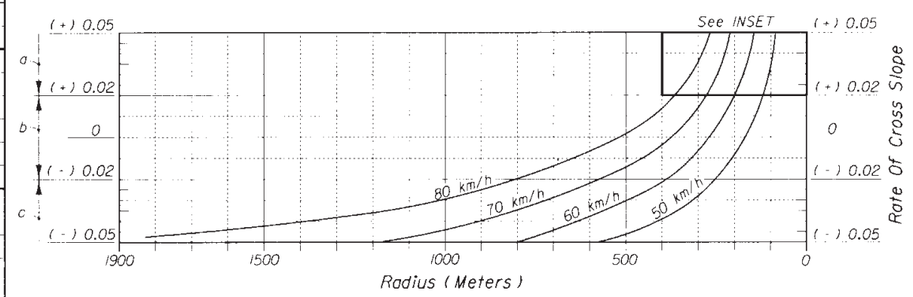

a: When the speed curves and the radius of curve lines intersect above this line, the pavement is to be superelevated (positive slope) at the rates indicated at the lines intersecting points.

b: When the speed curves and the radius of curve lines intersect between these limits, the pavement is to be superelevated at the rate of 0.02 (positive slope).

c: When the speed curves and the radius of curve lines intersect below this line. The pavement is to have normal crown (typically 0.02 and 0.03 downward slopes).

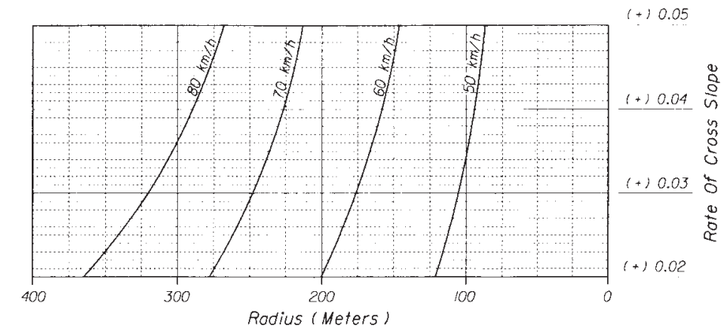

INSET

GENERAL NOTES

1. Maximum rate of superelevation for urban highways and high speed urban streets shall be 0.05.

2. Superelevation shall be obtained by rotating the plane successively about the break points of the section until the plane has attained a slope equal to that required by the chart. Should the rotation traverse the entire section and further superelevation be required, the remaining rotation of the plane shall be about the low edge of the inside travel lane.

   Crown is to be removed in the auxiliary lane to the outside of the curve only when the adjoining travel lanes require positive superelevation.

3. When positive superelevation is required, the slope of the gutter on the high side shall be a continuation of the slope of the superelevated pavement.

4. In construction, short vertical curves shall be placed at all angular profile breaks within the limits of the superelevation transition.

5. The variable superelevation transition length "L" shall have a minimum value of 15.0 m for design speeds under 60 km/h and 23.0 m for design speeds of 60 km/h or greater.

6. Roadway sections having lane arrangements different from those shown, but composed of a series of planes, shall be superelevated in a similar manner.

7. For superelevation of lower speed urban streets, see the FDOT 'Manual Of Uniform Minimum Standards For Design, Construction And Maintenance For Streets And Highways'. For superelevation of curves on rural highways, urban freeways and high speed urban highways, see Index No. 510.

e_{max} = 0.05

SUPERELEVATION FOR URBAN HIGHWAYS AND HIGH SPEED URBAN STREETS

STATE OF FLORIDA DEPARTMENT OF TRANSPORTATION
ROAD DESIGN

SUPERELEVATION
URBAN HIGHWAYS AND STREETS

	Names	Dates
Designed By	WLB/JVG	66 & 90
Drawn By	CDR/HSD	67 & 90
Checked By	RLO/JVG	67 & 90
F.H.W.A. Approved:		5/20/77

Approved By Freddie Simmons
State Roadway Design Engineer

Revision No.	Sheet No.	Index No.
94	1 of 3	511

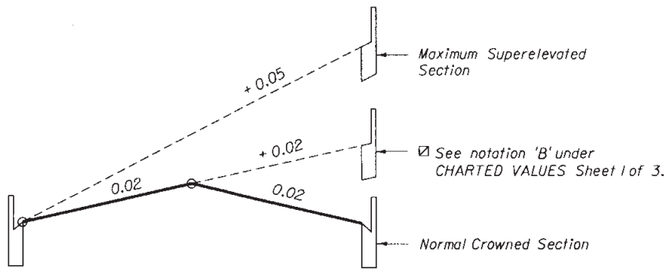

TWO TRAVEL LANES EACH DIRECTION

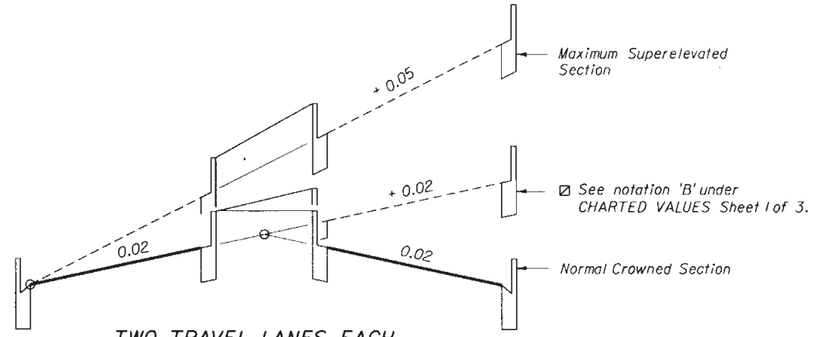

TWO TRAVEL LANES EACH DIRECTION WITH MEDIAN

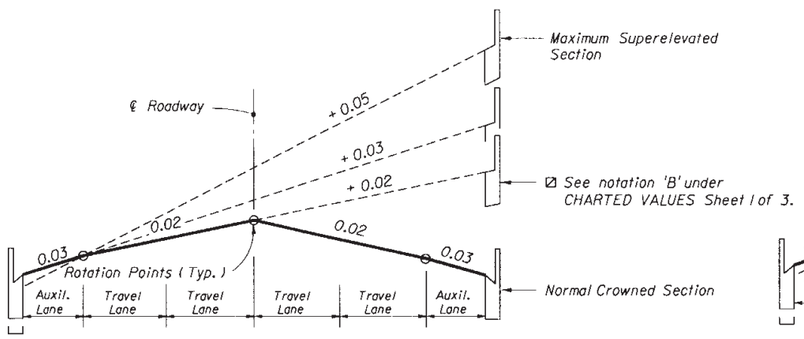

TWO TRAVEL LANES EACH DIRECTION WITH AUXILIARY LANES

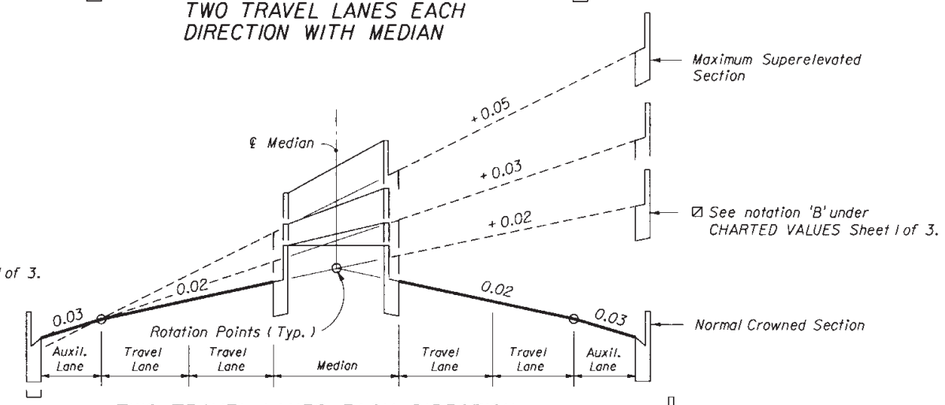

TWO TRAVEL LANES EACH DIRECTION WITH MEDIAN AND AUXILIARY LANES

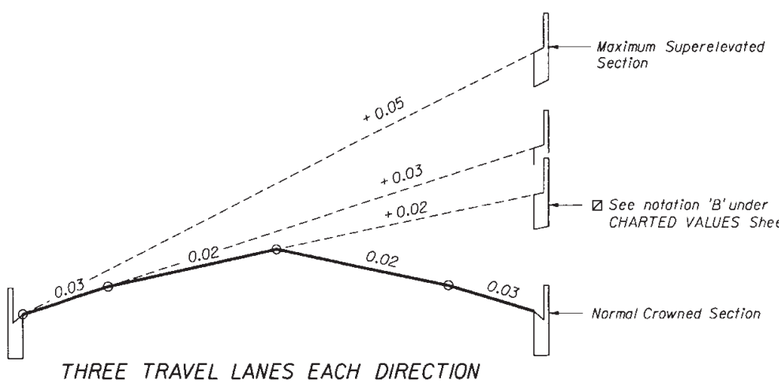

THREE TRAVEL LANES EACH DIRECTION

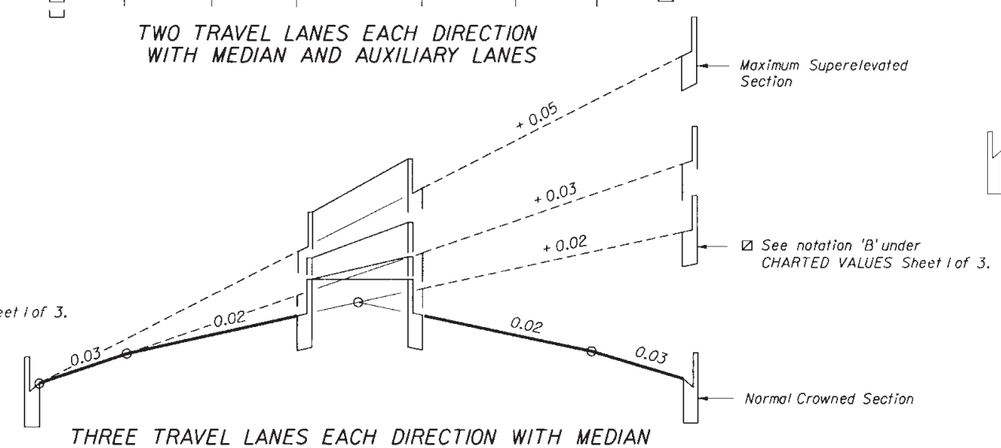

THREE TRAVEL LANES EACH DIRECTION WITH MEDIAN

UNDIVIDED FACILITIES

DIVIDED FACILITIES

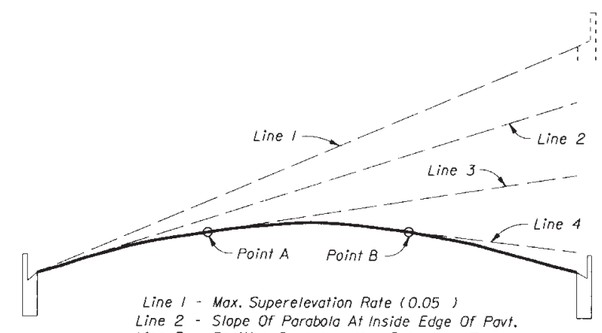

Line 1 - Max. Superelevation Rate (0.05)
Line 2 - Slope Of Parabola At Inside Edge Of Pavt.
Line 3 - Positive Superelevation Rate Less Than Max. Slope Of Parabola.
Line 4 - Adverse Superelevation.

Superelevation rates obtained from the chart or table on Sheet 1 of 3 are also applicable to a parabolic crown section. When this section is used, superelevation is established by rotating a tangent about the arc of the parabolic crown until the desired slope is attained (points A & B on sketch). The normal parabolic crown will be maintained outside the limits of the plane thus formed.

PARABOLIC SECTION

SUPERELEVATION TRANSITION SECTIONS FOR URBAN HIGHWAYS AND HIGH SPEED URBAN STREETS

STATE OF FLORIDA DEPARTMENT OF TRANSPORTATION
ROAD DESIGN

SUPERELEVATION
URBAN HIGHWAYS AND STREETS

	Names	Dates
Designed By	WLB/JVG	66 & 90
Drawn By	CDR/HSD	67 & 90
Checked By	RLO/JVG	67 & 90
F.H.W.A. Approved:		5/20/77

Approved By Freddie Simmons
State Roadway Design Engineer

Revision No.	Sheet No.	Index No.
94	2 of 3	511

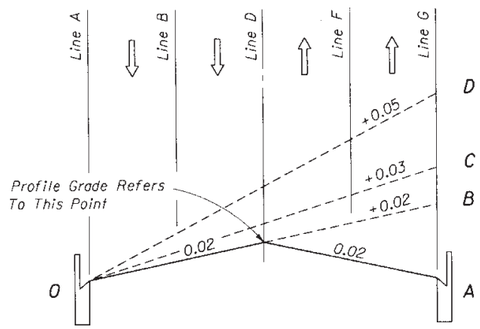

SECTION O-A to O-D

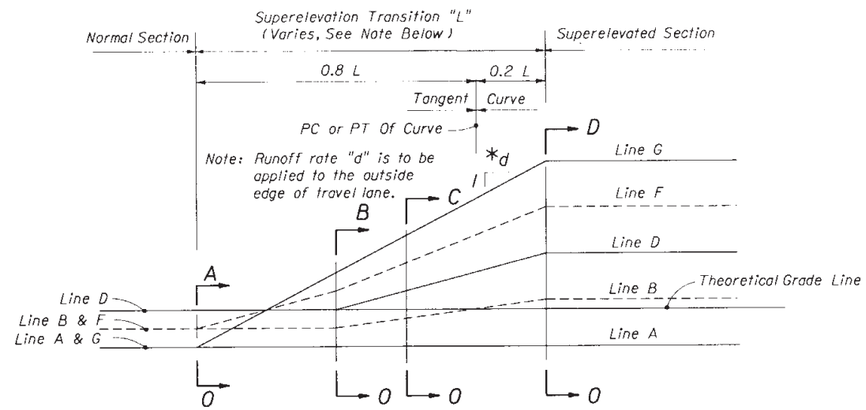

PROFILE

TWO LANES EACH DIRECTION

LINE	DESCRIPTION
A	Inside Travel Lane
B	Inside Lane Line
C	Inside Median Edge Pavement
D	℄ Construction
E	Outside Median Edge Pavement
F	Outside Lane Line
G	Outside Travel Lane
Inside And Outside Are Relative To Curve Center	

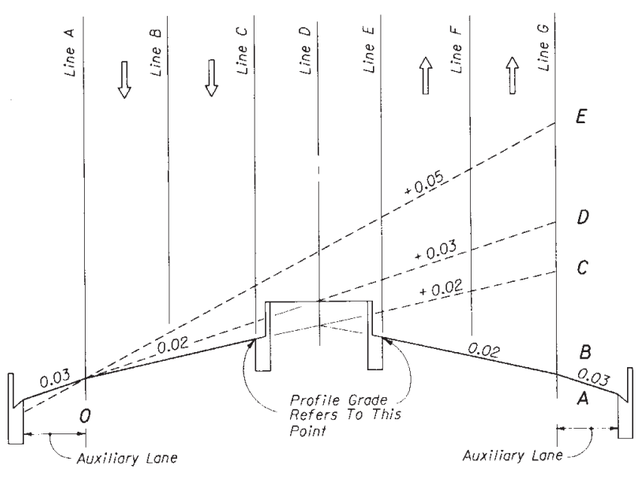

SECTION O-A to O-E

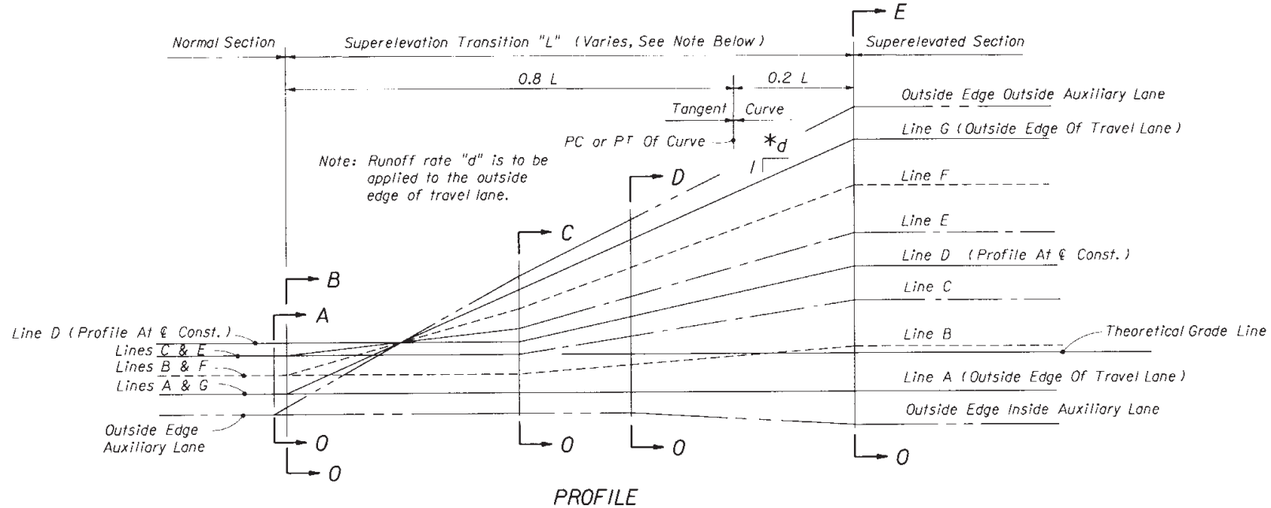

PROFILE

*d (Slope Ratio)	
50 km/h	1: 100
60 km/h	1: 125
70-80 km/h△	1: 150

△ 1: 125 May Be Used For Up To 80 km/h Under Restricted Conditions.

TWO LANES EACH DIRECTION WITH MEDIAN AND AUXILIARY LANE

Note: The sections and profiles shown are examples of superelevation transitions. Similar schemes should be used for roadways having other sections.

EXAMPLE SUPERELEVATION SECTIONS AND PROFILES FOR URBAN HIGHWAYS AND HIGH SPEED URBAN STREETS

STATE OF FLORIDA DEPARTMENT OF TRANSPORTATION
ROAD DESIGN

SUPERELEVATION
URBAN HIGHWAYS AND STREETS

	Names	Dates
Designed By	WLB/JVG	66 & 90
Drawn By	CDR/HSD	67 & 90
Checked By	RLO/JVG	67 & 90
F.H.W.A. Approved:		05/20/77

Approved By Freddie Simmons
State Roadway Design Engineer

Revision No.	Sheet No.	Index No.
94	3 of 3	511

LAYER THICKNESS FOR ASPHALTIC CONCRETE STRUCTURAL COURSES

(Layers Are Listed In Sequence Of Construction)

COURSE THICKNESS (mm)	LAYER THICKNESS (mm)																											
	All Type S-II With Type S-I Top Layer				All Type S-II With Type S-III Top Layer				All Type S-I				All Type S-I With Type S-III Top Layer				All Type S-III				Type S-II 1st Layer With Type S-I Intermediate And Top Layer				Type S-II 1st Layer With Type S-I Intermediate Layer(s) And Type S-III Top Layer			
	1st	2nd	3rd	4th	1st	2nd	3rd	4th	1st	2nd	3rd	4th	1st	2nd	3rd	4th	1st	2nd	3rd	4th	1st	2nd	3rd	4th	1st	2nd	3rd	4th
30									30								30											
40									40																			
50													30	20														
60									30	30			30 40	30 20														
70					50	20			40	30			40 50	30 20														
80	50	30			50 60	30 20			40 50	40 30			50	30														
90	50 60	40 30			60 70	30 20			30 50	30 40	30		40 30	30 30	20 30													
100	50 60 70	50 40 30			70	30																			50	30	20	
110	60 70	50 40																			50	30	30		50 50 60	30 40 30	30 20 20	
120	70	50			50	50	20														50 60	40 30	30 30		★	★	★	
130	50	50	30		50 60	50 50	30 20														★	★	★		★	★	★	
140	50 60	50 50	40 30		60 60	50 60	30 20														★	★	★		★	★	★	
150	★	★	★		60 70 70	60 50 60	30 30 20														50 60	40 30	30 30	30 30	★	★	★	★

★ Denotes multiple combinations available. Combination selected must be consistant with the General Notes shown below and the total number of layers shown by ★ 's used. The coarser graded mixes should be used in the lower layers to improve the pavement's resistance to rutting.

GENERAL NOTES

1. For combinations not shown in the table, the thickness must be consistent with the following thickness ranges:

Type Mix	Minimum	Maximum
S-I	30 mm	50 mm
S-II	50 mm	70 mm
S-III	20 mm	30 mm

Multiple layers shall be used when possible. Layer combinations shall be as approved by the Engineer.

2. In addition to the minimum and maximum thickness requirements, the following restrictions are placed on the respective material when used as a structural course:

S-I — May not be used in the 1st layer of courses over 90 mm thick.

S-II — May not be used in the final (top) structural layer

S-III — Limited to the final (top) structural layer, one layer only.

Above restrictions do not apply to overbuild and leveling.

3. When quantities are bid as tonnage items, equivalent tonnage layer thickness will be constructed (ie., 22 kg = 1 square meter for each 10 mm thickness).

4. The designer should consider stage construction for course thicknesses greater than 110 mm.

5. When construction includes the paving of adjacent shoulders (≤ 1.5 m wide), the layer thickness for the upper pavement layer and shoulder shall be the same and paved in a single pass. See Design Notes.

6. A minimum of 40 mm to 50 mm initial lift is required over an Asphalt Rubber Membrane Interlayer (ARMI)

DESIGN NOTES

It is desirable that the top layer of the roadway overlay and the adjacent shoulder structural course be constructed in one pass. The following apply when a 1.5 m or less shoulder meeting the minimum standards is to be constructed in conjunction with an overlay of the roadway:

1. If alternate friction courses <u>are not</u> to be shown on the typical section, use the following:

ROADWAY COURSE THICKNESS (mm) Type S		SHOULDER Type S
30	w/ any FC	30
40	w/ any FC	40
50	w/ FC-2	50*
50	w/ FC-3	20
60 and up	w/ FC-2	30
60 and up	w/ FC-3	20

*The increased thickness is required to insure a 30 mm thickness of Type S on the shoulder under the open graded friction course and to meet the requirements of the Min./Max. criteria of this index.

2. If alternate friction courses <u>are</u> to be shown on the typical section, use one of the following combinations:

ROADWAY COURSE THICKNESS (mm) Type S		SHOULDER Type S
30	w/ FC-3	30
Alt. 40	w/ FC-2	40
40	w/ FC-3	40
Alt. 50	w/ FC-2	50
50 and up	w/ FC-3	20
Alt. (plus 10)	w/ FC-2	30

3. Layer Thickness For FC-2 Is 15 mm. Layer Thickness For FC-3 Is 25 mm.

STATE OF FLORIDA DEPARTMENT OF TRANSPORTATION
ROAD DESIGN

FLEXIBLE PAVEMENT

LAYER THICKNESS FOR STRUCTURAL COURSES

	Names	Dates
Designed By	HWD	12/93
Drawn By	HKH	12/93
Checked By	BTD	12/93

Approved By Brian Dietz
State Pavement Design Engineer

Revision No.	Sheet No.	Index No.
94	1 of 1	513

F.H.W.A. Approved:

Base Group & Structural Range	Limerock LBR 100 (.007)	Cemented Coquina LBR 100 (.007)	Shell Rock LBR 100 (.007)	Bank Run Shell LBR 100 (.0063)	Graded Aggregate Base LBR 100 (.006)	ABC-3 (Min. Marshall Stability 4500 N) (.012)	* ABC-3 And 100 mm Granular Base, LBR 100 (.012) And (.006)	RAP Base (NA)
1 (.65-.75)	701 / 100 / .70	101 / 100 / .70	201 / 100 / .70	301 / 100 / .63	401 / 100 / .60	501 / 100 / 1.20	△ 601	□ 691 / 130
2 (.80 .90)	702 / 120 / .84	102 / 120 / .84	202 / 120 / .84	302 / 130 / .82	402 / 140 / .84	502 / 100 / 1.20	△ 602	
3 (.95-1.05)	703 / 140 / .98	103 / 140 / .98	203 / 140 / .98	303 / 160 / 1.01	403 / 160 / .96	503 / 100 / 1.20	△ 603	
4 (1.05-1.15)	704 / 160 / 1.12	104 / 160 / 1.12	204 / 160 / 1.12	304 / 180 / 1.13	404 / 190 / 1.14	504 / 100 / 1.20	604	
5 (1.25-1.35)	705 / 180 / 1.26	105 / 180 / 1.26	205 / 180 / 1.26	305 / 200 / 1.26	405 / 210 / 1.26	505 / 110 / 1.32	605	
6 (1.35 1.45)	706 / 200 / 1.40	106 / 200 / 1.40	206 / 200 / 1.40	306 / 220 / 1.39	406 / 230 / 1.38	506 / 120 / 1.44	606	
7 (1.50 1.60)	707 / 220 / 1.54	107 / 220 / 1.54	207 / 220 / 1.54	307 / 250 / 1.58	407 / 260 / 1.56	507 / 130 / 1.56	607	
8 (1.65-1.75)	708 / 240 / 1.68	108 / 240 / 1.68	208 / 240 / 1.68	308 / 270 / 1.70	408 / 280 / 1.68	508 / 140 / 1.68	608	
9 (1.75-1.85)	709 / 260 / 1.82	109 / 260 / 1.82	209 / 260 / 1.82	309 / 290 / 1.83	409 / 300 / 1.80	509 / 150 / 1.80	609 / 100 / 1.80	629
10 (1.90-2.00)	710 / 280 / 1.96	110 / 280 / 1.96	210 / 280 / 1.96	310 / 310 / 1.95	410 / Ø 510 / 1.98	330 / 160 / 1.92	610 / 110 / 1.92	630
11 (2.05-2.15)	711 / 300 / 2.10	111 / 300 / 2.10	211 / 300 / 2.10	311 / 330 / 2.08	Ø 411 / 350 / 2.10	Ø 511	611 / 180 / 2.16	631 / 130 / 2.16
12 (2.20-2.30)	712 / 320 / 2.24	112 / 320 / 2.24	212 / 320 / 2.24	312 / 360 / 2.27	Ø 412		612 / 190 / 2.28	632 / 140 / 2.28
13 (2.35 2.45)	713 / Ø 113 / 340 / 2.38	Ø 213 / 340 / 2.38	Ø 313 / 340 / 2.38				613 / 200 / 2.40	633 / 150 / 2.40
14 (2.45 2.55)	714 / Ø 114 / 360 / 2.52	Ø 214 / 360 / 2.52	Ø 314 / 360 / 2.52				614 / 210 / 2.52	634 / 160 / 2.52
15 (2.60 2.70)	715						615 / 220 / 2.64	635 / 170 / 2.64

GENERAL USE OPTIONAL BASE GROUPS AND STRUCTURAL NUMBERS

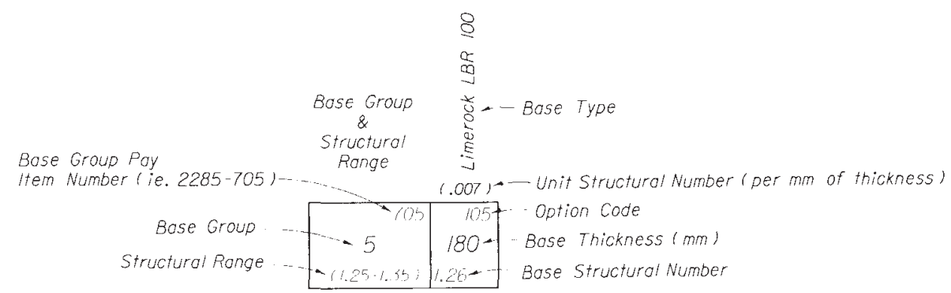

LEGEND

* For granular base, the construction of both the subbase and ABC-3 will be paid for under the contract unit price for Optional Base. Granular bases include Limerock, Cemented Coquina, Shell Rock, Bank Run Shell and Graded Aggregate Base at LBR 100. The base thickness shown is ABC-3. All subbase thicknesses are 100 mm. The base structural number shown is for the composite base.

Ø To be used for widening only, one meter or less.

△ Base Group 1 Based on minimum practical thicknesses.

□ Restricted to non-Interstate shoulder base construction.

GENERAL NOTES

1. On new construction and complete reconstruction projects where an entirely new base is to be built, the design engineer may specify just the Base Group and any of the unrestricted General Use Optional Bases shown in that Base Group may be used. Note, however, that some thick granular bases are limited to widening which prevents their general use.
2. On any type of widening project, the base options to be used must be specified by the designer and shown in the plans.
3. Where base options are specified in the plans, only those options may be bid and used.
4. The designer may require the use of a single base option, for instance ABC-3 in a high water condition. This will still be bid as Optional Base.
5. The contractor will indicate the basis for his bid by designating the three digit option code on the bid blank.

STATE OF FLORIDA DEPARTMENT OF TRANSPORTATION
ROAD DESIGN

OPTIONAL BASE GROUP AND STRUCTURAL NUMBERS

	Names	Dates
Designed By	HMD	12/93
Drawn By	HKH	12/93
Checked By	BTD	12/93

Approved By Bruce Dietrich
State Pavement Design Engineer

Revision No.	Sheet No.	Index No.
94	1 of 2	514

F.H.W.A. Approved:

Base Group & Structural Range	Limerock Stabilized LBR 70 (.005)	Shell LBR 70 (.005)	Shell Stabilized LBR 70 (.004)	Sand-Clay LBR 75 (.005)	ABC-1 (Min. Marshall Stability 2300 N) (.008)	ABC-2 (Min. Marshall Stability 3400 N) (.010)	SAHM (Min. Marshall Stability 1500 N) (.006)	Soil Cement (2.0 MPa) (Plant Mixed) (.006)	Soil Cement (3.5 MPa) (Plant Mixed) (.008)	Soil Cement (2.0 MPa) (Road Mixed) (.006)
701 1 (.65-.75)	121 130 .65	441 130 .65	451 180 .71	701 130 .65	△ 631 100 .80	△ 641 100 1.00	651 100 .60	801 100 .60	△ 811 100 .80	821 130 .78
702 2 (.80-.90)	122 160 .80	442 160 .80	452 210 .83	702 160 .80	632 100 .80	△ 642 100 1.00	652 140 .84	802 140 .84	812 100 .80	822 140 .84
703 3 (.95-1.05)	123 200 1.00	443 200 1.00	453 240 .94	703 200 1.00	633 120 .96	643 100 1.00	653 160 .96	803 160 .96	813 120 .96	823 160 .96
703 4 (1.05-1.15)	124 220 1.10	444 220 1.10	454 270 1.06	704 220 1.10	634 140 1.12	644 110 1.10		804 190 1.14	814 140 1.12	824 190 1.14
705 5 (1.25-1.35)	125 250 1.26	445 250 1.26	455 300 1.18	705 250 1.26	635 160 1.28	645 130 1.30		805 210 1.26	815 160 1.28	825 210 1.26
706 6 (1.35-1.45)	126 280 1.40	446 280 1.40		706 280 1.40				806 230 1.38	816 180 1.44	
707 7 (1.50-1.60)	127 310 1.55	447 310 1.55		707 310 1.55				807 260 1.56	817 190 1.52	
708 8 (1.65-1.75)								808 280 1.68	818 210 1.68	
709 9 (1.75-1.85)								809 300 1.80		
710 10 (1.90-2.00)										
711 11 (2.05-2.15)										
712 12 (2.20-2.30)										
713 13 (2.35-2.45)										
714 14 (2.45-2.55)										
715 15 (2.60-2.70)										

Not Recommended For 20 Year Design Accumulated 80 kN Equivalent Single Axle (ESAL) Loads Greater Than 1,000,000

Note: These base materials may be used on FDOT projects when approved in writing by the District Materials Engineer and shown in the plans.

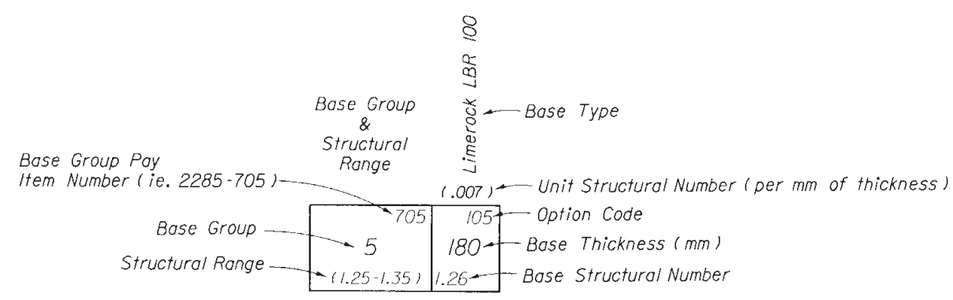

LEGEND

△ Based on minimum practical thickness.

LIMITED USE OPTIONAL BASE GROUPS AND STRUCTURAL NUMBERS

STATE OF FLORIDA DEPARTMENT OF TRANSPORTATION
ROAD DESIGN

OPTIONAL BASE GROUP AND STRUCTURAL NUMBERS

	Names	Dates
Designed By	HWD	12/93
Drawn By	HKH	12/93
Checked By	BTD	12/93

Approved By: Bruce Dietrich
State Pavement Design Engineer

Revision No.	Sheet No.	Index No.
94	2 of 2	514

F.H.W.A. Approved:

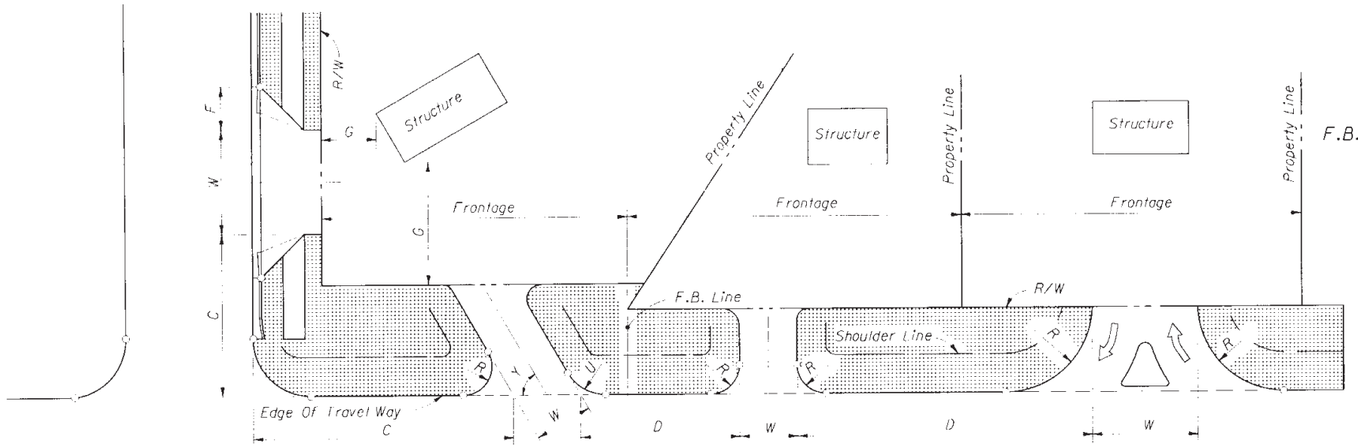

For Additional Information Refer To FDOT Rules Chapters 14-96 And 14-97.

SKETCH ILLUSTRATING DEFINITIONS

LEGEND

-O-	Return Radius Point Or Flare Point
▨	Buffer Areas
F.B. Line	Frontage Boundary Line
W	Driveway Width
Y	Driveway Angle
C	Corner Clearance
G	Setback
R	Outside Radius
U	Inside Radius
D	Distance Between Connections
F	Flare

GENERAL NOTES

1. For definitions and descriptions of access connection "Categories" and access "Classifications" of highway segments, and for other detailed information on access to the State Highway System, refer to FDOT Rule Chapter 14-96, "State Highway Connection Permits Administrative Process" and Rule Chapter 14-97, "State Highway System Access Management Classification System And Standards"
2. For this index the term 'turnout' applies to that portion of driveways, roads or streets adjoining the outer roadway. For this index the term 'connection' encompasses a driveway, street or road and their appurtenant islands, separators, transition tapers, auxiliary lanes, travelway flares, drainage pipes and structures, crossovers, sidewalks, curb cut ramps, signing, pavement marking, required signalization, maintenance of traffic or other means of access to or from controlled access facilities. The turnout requirements set forth in this index do not provide complete intersection design, construction or maintenance requirements.
3. The location, positioning, orientation, spacing and number of connections and median openings shall be in conformance with FDOT Rule Chapter 14-97.
4. On Department construction projects all driveways not shown on the plans are to be reconstructed at their existing location in conformance to these standards, or, in conformance to permits issued during the construction project.
5. Driveways shall have sufficient length and size for all vehicular queueing, stacking, maneuvering, standing and parking to be carried out completely beyond the right of way line. Except for vehicles stopping to enter the highway, the turnout areas and drives within the right of way shall be used only for moving vehicles entering or leaving the highway.
6. Connections with expected daily traffic over 4000 vpd are to be constructed as intersecting streets or roads. The design requirement of this index and that of the local government will be used to select appropriate connection widths, radii and intersection design, subject to the approval of the Department.

   For connections with expected daily traffic less than 4000 vpd, the Department will determine if drop curbs or radius returns are required in accordance with existing or planned connections. Where radius returns apply, the design requirements of this index and that of the local government will be used to select appropriate connection widths, radii and intersection design, subject to the approval of the Department.

   For connections that are intended to daily accommodate either multi-unit vehicles or single unit vehicles exceding 9.0 m in length, returns with 15.0 m radii are to be used, unless otherwise called for in the plans or otherwise stipulated by permit. Where large numbers of multi-unit vehicles will use the connection, the connection width and radii are to be increased and auxiliary lanes, tapers, lane flares separators and/or islands constructed, as determined by the Department to be necessary for safe turning movements.
7. Any connection on a highway having a posted or operating speed over 70 km/h shall have radial returns. Any connection requiring or having a specified median opening with left turn storage and served directly by that opening shall have radial returns.
8. Where a connection is intended to align with a connection across the highway, the through lanes are to align directly with the corresponding through lanes.
9. For new connections and for connections on all new construction and reconstruction projects, pavement materials and thicknesses shall meet the requirements applicable to either that detailed for "Urban Flared Turnouts", or, that described in "Table 515-1" for connections with radial returns and/or auxiliary lanes.
10. The responsibility for the cost of construction or alteration to an access connection shall be in accordance with FDOT Rule Chapter 14-96.

DESIGN NOTES

1. Prior to the adoption of FDOT Rules Chapters 14-96 and 14-97, connections to the State Highway System were defined and permitted by Classes. Connections have been redfined by Categories under Rule 14-96; and, the term "Class" has been applied to highway segments of the State Highway System as defined under Rule 14-97.

ELEMENT DESCRIPTION	URBAN (CURB & GUTTER)			RURAL		
	1-20 Trips/Day or 1-5 Trips/Hour	21-600 Trips/Day or 6-60 Trips/Hour	601-4000 Trips/Day◪ or 61-400 Trips/Hour	1-20 Trips/Day or 1-5 Trips/Hour	21-600 Trips/Day or 6-60 Trips/Hour	601-4000 Trips/Day◪ or 61-400 Trips/Hour
		2-Way □	2-Way □		2-Way □	2-Way □
CONNECTION WIDTH W (m)	3.6 Min. 7.2 Max.	7.2 Min. 10.8 Max.	7.2 Min. 10.8 Max.	3.6 Min. 7.2 Max.	7.2 Min. 10.8 Max.	7.2 Min. 10.8 Max.
FLARE (Drop Curb) F (m)	3.0 Min.	3.0 Min.	N/A	N/A	N/A	N/A
RETURNS (Radius) R & U (m)	N/A	△	8 Min. 15 Std. 23 Max.	5 Min. 8 Std. 15 Max.	8 Min. 15 Std. 23 Max.	8 Min. 15 Std. (Or 3-Centered Curves)
ANGLE OF DRIVE Y		60°-90°	60°-90°		60°-90°	60°-90°
DIVISIONAL ISLAND (Throat Median) (m)		1.2 7 Wide	1.2 7 Wide		1.2-7 Wide	1.2-7 Wide
SETBACK G (m)	3.6 Min., All categories. See General Note No. 5.					

◪ Street or road intersection design, with possible auxiliary lanes and channelization, may be necessary. Intersection design, with possible auxiliary lanes and channelization, should be considered for connections with more than 4000 trips/days.

□ "2-Way" refers to one "in" movement and one "out" movement i.e. not exclusive left or right turn lanes on the connection.

△ Small radii may be used in lieu of flares as approved by the Department.

DESIGN NOTE: 1 Way connections will be designed to effectively eliminate unpermitted movements.

NOT INTENDED FOR FULL INTERSECTION DESIGN

SUMMARY OF GEOMETRIC REQUIREMENTS FOR TURNOUTS

STATE OF FLORIDA DEPARTMENT OF TRANSPORTATION
ROAD DESIGN

TURNOUTS

	Names	Dates
Designed By	COMM/JVG	90/91
Drawn By	HSD	03/91
Checked By	JVG	03/91

Approved By: Freddie Simmons
State Roadway Design Engineer

Revision No.	Sheet No.	Index No.
94	1 of 6	515

F.H.W.A. Approved:

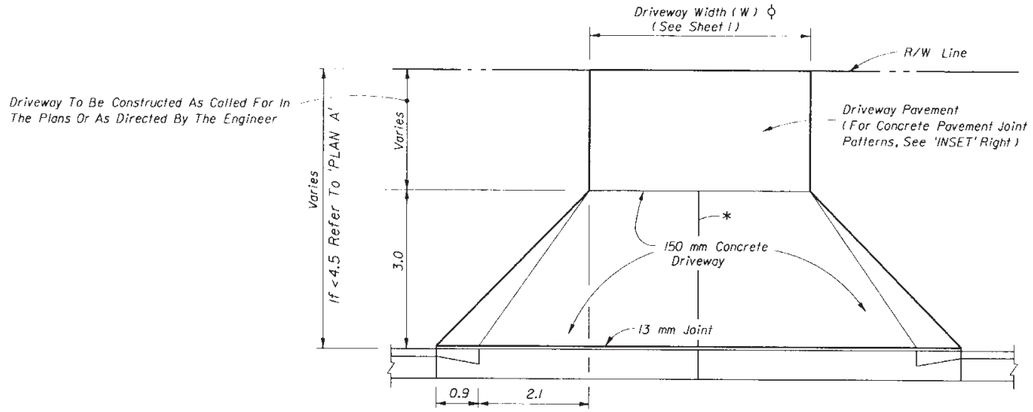

PLAN C

TURNOUT WITHOUT SIDEWALK

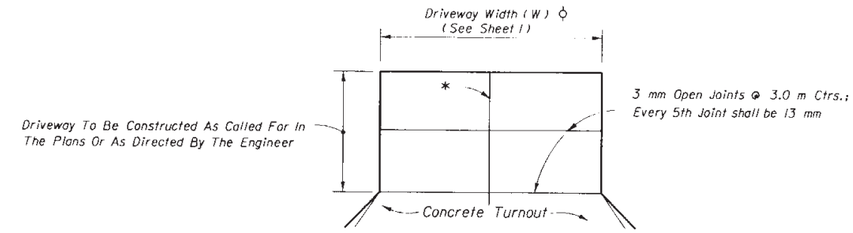

JOINT PATTERN WHEN CONCRETE DRIVE CONSTRUCTED

INSET

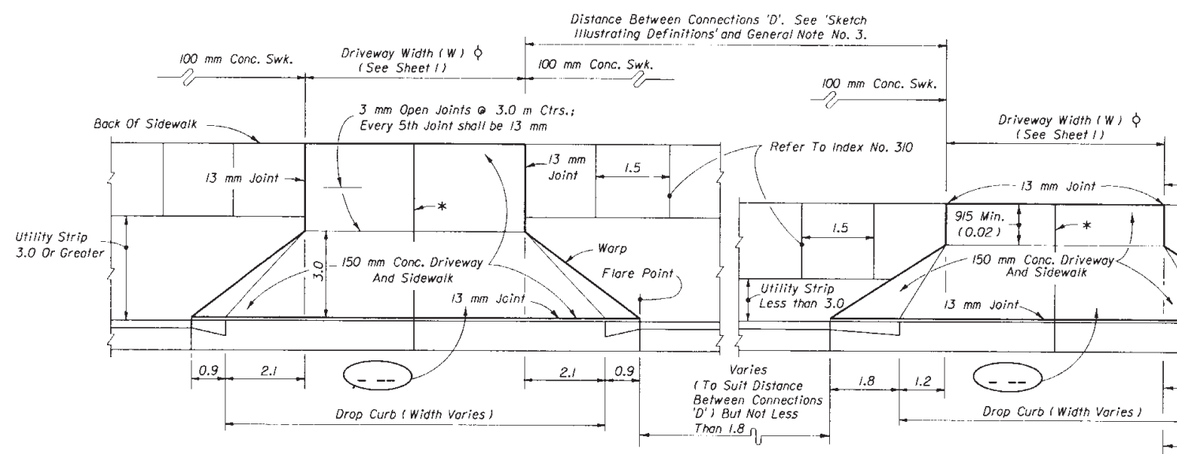

PLAN B

TURNOUT WITH SIDEWALK AND UTILITY STRIP (10' OR GREATER)

PLAN A

TURNOUT WITH SIDEWALK AND UTILITY STRIP (LESS THAN 10')

Footnotes:

All 13 mm joints shall be constructed with preformed joint filler.

* 3 mm Open joints placed at equal (6.0 m max.) intervals for driveways over 6.0 m wide. Joints in curb and gutter to match joints in driveways.

△ When connecting to sidestreet curb and gutter sections, the no drop curb limits should extend back to the sidestreet radius point. With or without curb and gutter, no driveway should encroach on the corner radius.

℄ Driveways (150 mm concrete) shall be of a uniform width (W) to the right of way line.

(- -) Alpha-numeric identification of a flared driveway type specifically called for in the plans, see sheets 3 and 4.

SPECIAL NOTES FOR URBAN FLARED TURNOUTS

1. Driveway 150 mm concrete pavement and drop curb shall meet the material and construction requirements of Sections 522 and 520 respectively of the FDOT Standard Specifications. The driveway foundation shall meet the requirement of Subarticle 522-4.
2. For details of drop curb and public sidewalk curb ramps refer to Indexes Nos. 300 and 304 respectively.
3. Where turnouts are constructed within existing curb and gutter, the existing curb and gutter shall be removed either to the nearest joint beyond the flare point or to the extent that no remaining section is less than 1.5 m long; and, drop curb constructed in accordance with Notes Nos. 1 and 2.
4. Cost for preformed joint filler shall be included in the cost for the concrete pavement (concrete sidewalk, 150 mm thick).
5. For turnouts with radial returns see the requirements under the "Summary Of Geometric Requirements For Turnouts", the "General Notes", the details of "Rural Turnout Construction" and the detail of "Limits Of Clearing & Grubbing, Stabilization And Base At Intersections".
6. Department maintenance of pavement shall extend out to the right of way or 0.6 m back of sidewalk, whichever distance is less.
7. The maintenance and operation of highway lighting, traffic signals, associated equipment, and other necessary devices shall be the responsibility of a public agency.
8. All pavement markings on the State highways, including acceleration and deceleration lane markings, and signing installed for the operation of the State highway shall be maintained by the Department.
9. All signing and marking installed for the operation of the connection (such as stop bars and stop signs for the connection) shall be the responsibility of the permittee.
10. Turnouts will be paid for under the contract unit price for Sidewalk Concrete (150 mm Thick), M2.

DESIGN NOTES FOR URBAN FLARED TURNOUTS

1. Driveways indicated as 'Adverse Applications' are those with slopes that can cause overhang drag for representative standard passenger vehicles under fully loaded conditions; or, those with slopes that can cause drivers who are leaving the roadway to slow or pause to the extent that traffic demand volumes will be impeded.

   Driveways indicated as 'Marginal Applications' are those with slopes that can cause overhang drag for representative standard passenger vehicles under fully loaded conditions when the driveway is located on the low side of fully superelevated roadways.

   Driveways indicated as 'General Applications' are those with slopes that can readily accommodate representative standard passenger vehicles and those and those that can accommodate representitive standard trucks, vans, buses and recreational vehicles operating under normal crown and superelevation conditions.

2. The standard flared driveways on this index may not accommodate vehicles with low beds, low undercarriage or low appendage features. Where such vehicles are design vehicles driveways are to have site specific flare designs or Catagory III designs.
3. When specific flare type driveways are to be constructed, the type shall be designated in the plans using the assigned alpha-numeric designation.

Note: See sheet 1 for 'GENERAL NOTES'

URBAN FLARED TURNOUTS

STATE OF FLORIDA DEPARTMENT OF TRANSPORTATION
ROAD DESIGN

TURNOUTS

	Names	Dates
Designed By	JVG/HKH	09/93
Drawn By	HKH	09/93
Checked By	JVG	09/93

Approved By Freddie Simmons
State Roadway Design Engineer

Revision No.	Sheet No.	Index No.
94	2 of 6	515

F.H.W.A. Approved:

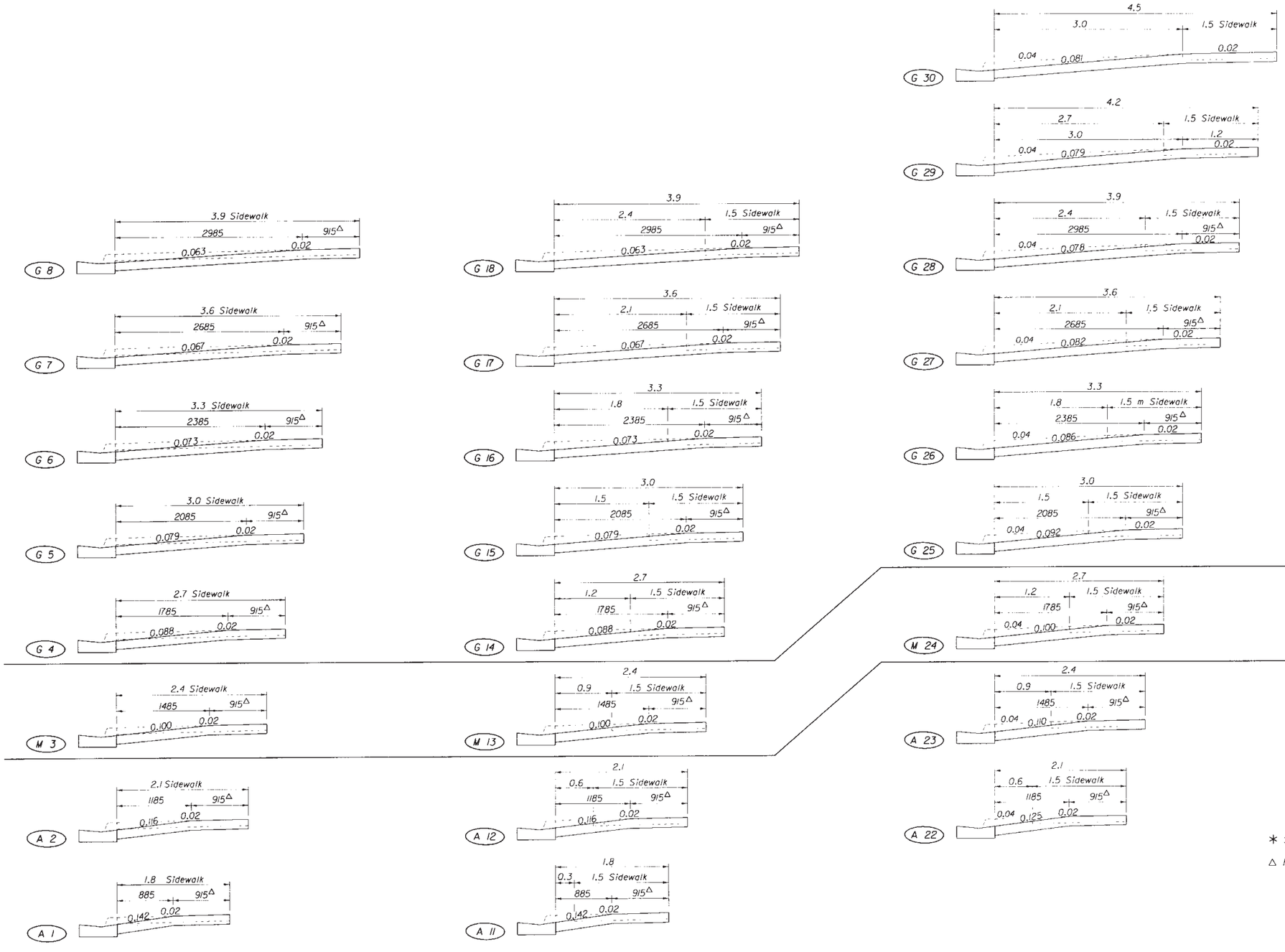

SIDEWALK ADJACENT TO CURB

SIDEWALK WITH UTILITY STRIP ON 0.02 SLOPE

SIDEWALK WITH UTILITY STRIP ON 0.04 SLOPE

DRIVEWAY SECTIONS ON CURBED FACILITIES WITH SIDEWALKS

* See 'DESIGN NOTES FOR URBAN FLARED TURNOUTS' On Sheet 2.

△ Maximum Width Attainable Up To 915 With A Finding Of Infeasibility.

STATE OF FLORIDA DEPARTMENT OF TRANSPORTATION
ROAD DESIGN

TURNOUTS

	Names	Dates
Designed By	JVG/HKH	9/93
Drawn By	HKH	9/93
Checked By	JVG/FLS	9/93

F.H.W.A. Approved:

Approved By Freddie Simmons
State Roadway Design Engineer

Revision No.	Sheet No.	Index No.
94	3 of 6	515

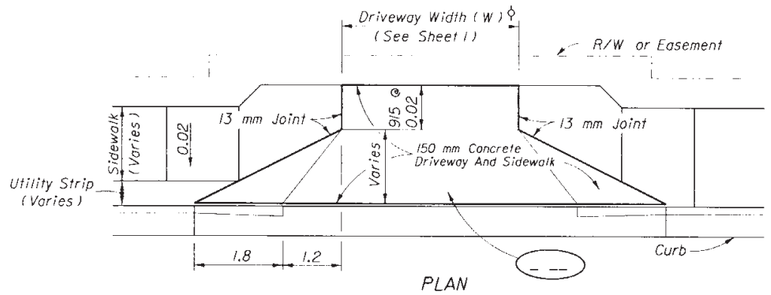

PLAN

MODIFICATIONS OF 'ADVERSE' AND 'MARGINAL' APPLICATIONS

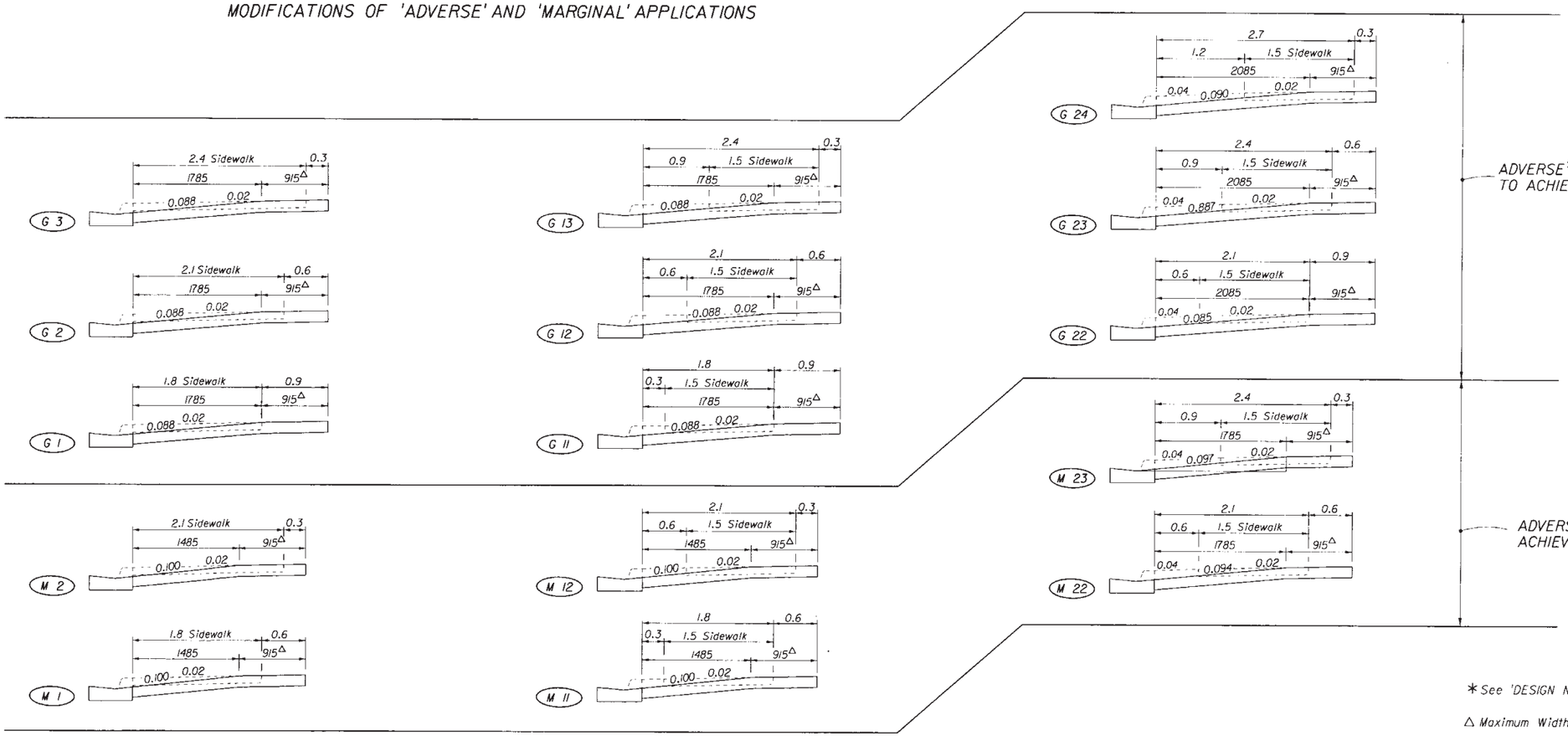

*See 'DESIGN NOTES FOR URBAN FLARED TURNOUTS' On Sheet 2.

△ Maximum Width Attainable Up To 915 With A Finding Of Infeasibility.

SIDEWALK ADJACENT TO CURB

SIDEWALK WITH UTILITY STRIP ON 0.02 SLOPE

SIDEWALK WITH UTILITY STRIP ON 0.04 SLOPE

MODIFICATIONS TO ADVERSE AND MARGINAL SECTIONS

STATE OF FLORIDA DEPARTMENT OF TRANSPORTATION
ROAD DESIGN

TURNOUTS

	Names	Dates
Designed By	JVG/HKH	9/93
Drawn By	HKH	9/93
Checked By	JVG/FLS	9/93

Approved By Freddie Simmons
State Roadway Design Engineer

Revision No.	Sheet No.	Index No.
94	4 of 6	515

F.H.W.A. Approved:

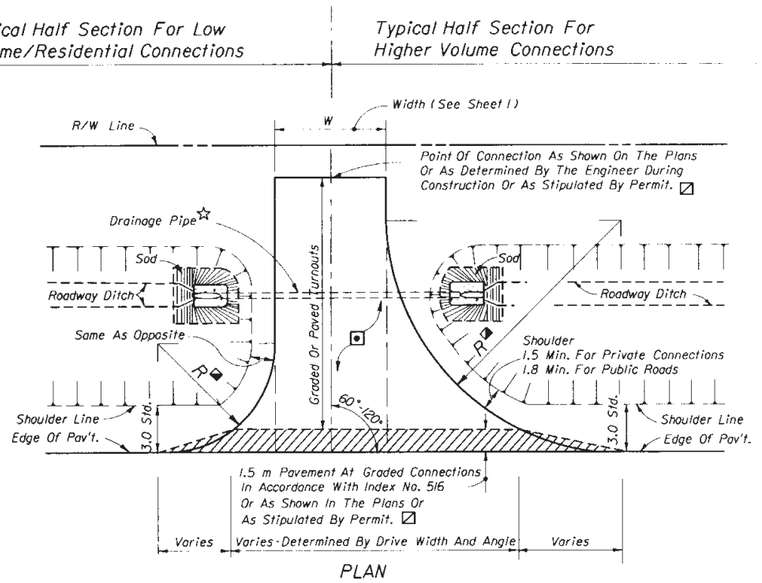

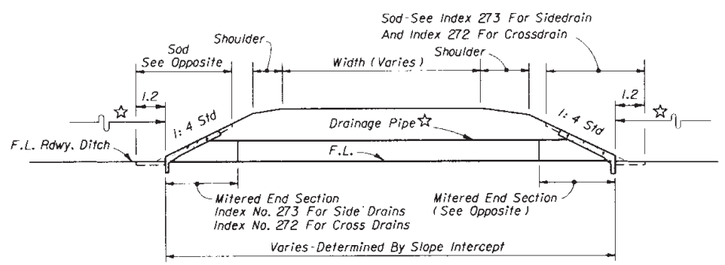

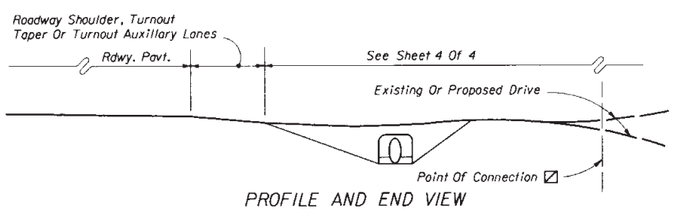

☆ Drainage pipe size and length shall be that shown on the plans, or as stipulated by permit, or, as determined by the Engineer during construction. The size shall be at least that established by the FDOT District, but not less than 375 mm diameter or equivalent. For minimum cover over drainage pipe see Index No. 205. Pipe arch or elliptical pipe may be required to obtain necessary cover. At minimal cover applications a modified pavement apron is permitted. See 'PERMISSIBLE PAVEMENT MODIFICATION' Index No. 273. For spacing between adjacent pipe end treatments see Index No. 273.

◉ Stable material may be required for graded turnouts to private property as directed by the Engineer in accordance with Section 102-6 of the Standard Specifications.

☐ The 1.5 m pavement at graded connections is not required where there is paved shoulder 1.2 m or more in width. The 1.5 m pavement requirement may be waived for connections serving one or two homes or field entrances with less than 20 trips per day, or 5 trips per hour as approved by permit or by the Engineer, or when not itemized in the plans.

Paved turnouts are to be constructed for all paved connecting facilities. The connecting point will be determined by the Engineer.

Paved turnouts are to be constructed for all business, commercial, industrial or high volume residential graded connecting facilities. The connecting point shall be 9.0 m from edge of roadway pavement or at R/W line, whichever is less.

Paved turnouts are to be constructed for all connecting facilities over 4000 vehicles per day. The connecting point shall be at the R/W line.

◪ See "Summary Of Geometric Requirements For Turnouts" chart for return radii lengths and supplemental information.

RURAL TURNOUT CONSTRUCTION

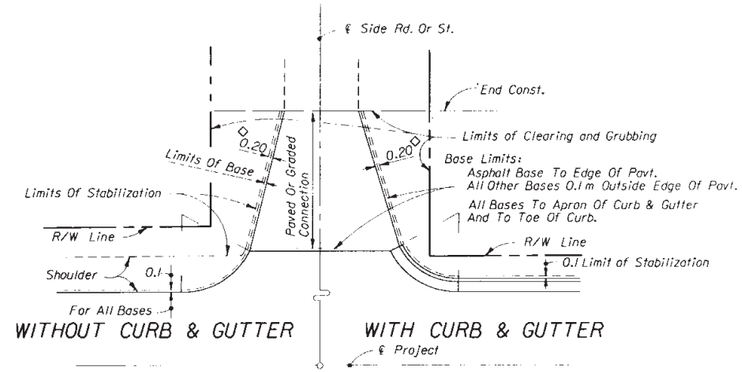

◇ 0.20 m Or Match Exist. Stabilizing (0.20 m Min.)

LIMITS OF CLEARING & GRUBBING, STABILIZING AND BASE AT INTERSECTIONS

MATERIAL TYPES AND THICKNESSES IN DRIVING AREAS FOR RURAL AND URBAN CONNECTIONS			
		Thickness (mm) ①	
Course	Materials ②	Connections ③	Roadway ④
Structural	Ashpaltic Concrete	30	40
Bases	Optional Base Group (O.B.G.)	O.B.G. 1	O.B.G. 3

① Minimum thickness.
② All materials shall be approved by the Department prior to being placed.
③ Connection structure other than traffic lanes. See Notes 1 and 2 below.
④ Travel way flares (bypass lanes), auxiliary lanes serving more than a single connection, and all median crossovers including their auxiliary lanes and/or transition tapers. See Notes 1 and 2 below.

NOTES

1. The pavement should be structurally adequate to meet the expected traffic loads and should not be less than that shown above, except as approved by the Department for graded connections. Other Department approved pavement equivalences may be used at the discretion of the Engineer. For additional information see Index No. 514.
2. Auxiliary lanes and their transition tapers shall be the same structure as the abutting roadway pavement or any of the roadway structures tabulated above, whichever is thicker.
3. If an asphalt base course (ABC) is used for a turnout, its thickness may be increased to match the edge of roadway pavement in lieu of a separate structural course. 150 mm of Portland cement concrete will be acceptable in lieu of the asphalt base and structural courses. See Notes 4 and 5 below.
4. A structural course is required for flexible pavements when they are used for auxiliary lanes serving more than a single connection.
5. Connections paved with Portland cement concrete shall be Class I concrete at least 150 mm thick. The Department may require greater thickness when called for in the plans or stipulated by permit. Materials and construction are to conform with FDOT Standard Specifications Sections 346, 350 and 522.
6. The Department may require other pavement criteria where local conditions warrant.

PAVEMENT STRUCTURE FOR TURNOUTS AND AUXILIARY LANES TABLE 515-1

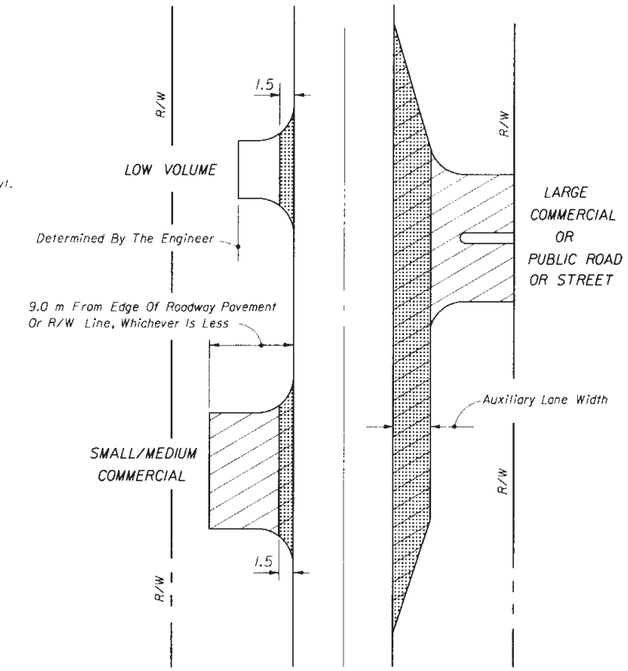

LEGEND
- Graded Or Paved
- Required Paving
- Limits Of Department Maintenance

NOTES

1. Auxiliary lane pavements and crossover pavements shall be maintained by the Department.
2. Department maintenance of turnout pavement shall extend out to 1.5 m from edge of the travel way or limits of paved shoulders, and, extend to include auxiliary lanes. The remainder of any turnout paved area on the right of way shall be maintained by the owner or his authorized agent. As a function of routinely reworking shoulders, the Department may grade and shape existing material on non-paved areas beyond the maintained pavement.
3. Control and maintenance of drainage facilities within the right of way shall be solely the responsibility of the Department, unless specified differently by Department permit.
4. The maintenance and operation of highway lighting, traffic signals, associated equipment, and other necessary devices shall be the responsibility of a public agency.
5. All pavement markings on the State highways, including acceleration and deceleration lane markings, and signing installed for the operation of the State highway shall be maintained by the Department.
6. All signing and marking installed for the operation of the connection (such as stop bars and stop signs for the connection) shall be the responsibility of the permittee.

LIMITS OF CONSTRUCTION AND MAINTENANCE FOR RURAL CONNECTIONS

STATE OF FLORIDA DEPARTMENT OF TRANSPORTATION
ROAD DESIGN

TURNOUTS

	Names	Dates
Designed By	COMM/JVG	90/91
Drawn By	HSD	3/91
Checked By	JVG	03/91

Approved By Tuddie Simmons
State Roadway Design Engineer

Revision No.	Sheet No.	Index No.
94	5 of 6	515

F.H.W.A. Approved:

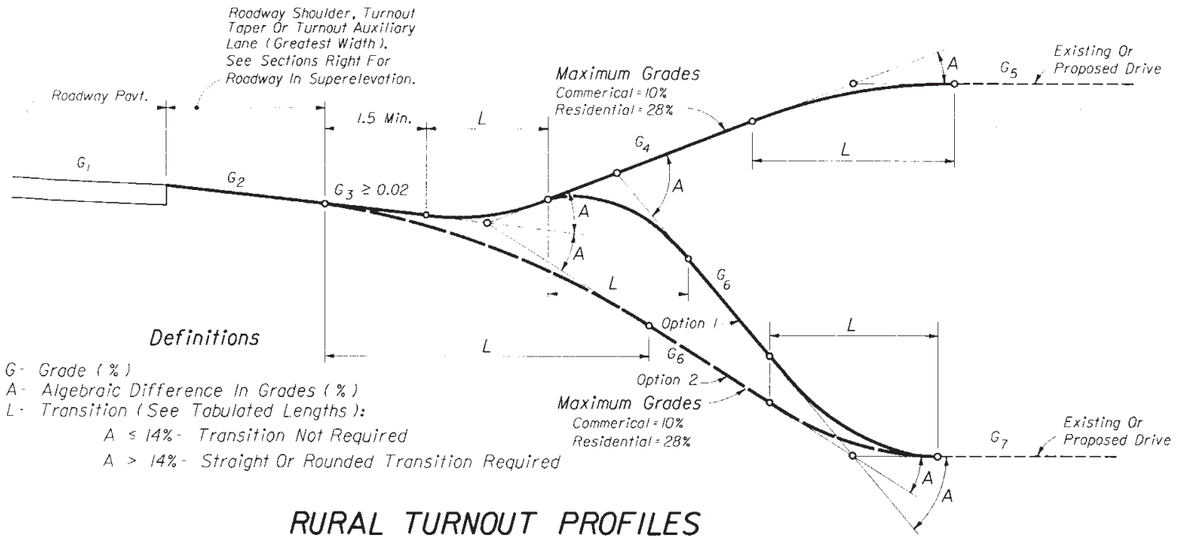

Definitions

G - Grade (%)
A - Algebraic Difference In Grades (%)
L - Transition (See Tabulated Lengths):

A ≤ 14% - Transition Not Required
A > 14% - Straight Or Rounded Transition Required

RURAL TURNOUT PROFILES

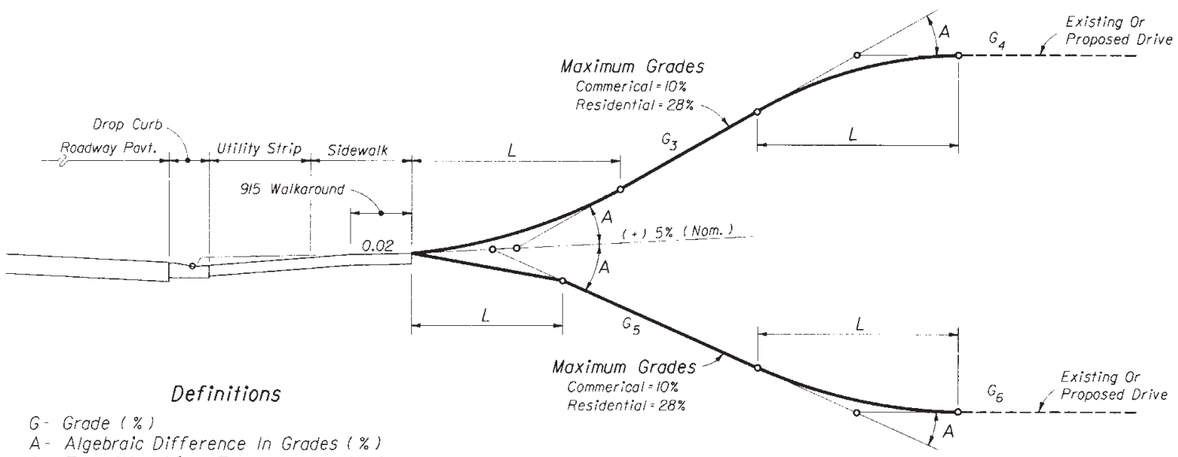

Definitions

G - Grade (%)
A - Algebraic Difference In Grades (%)
L - Transition (See Tabulated Lengths):

A ≤ 14% - Transition Not Required
A > 14% - Straight Or Rounded Transition Required

URBAN TURNOUT PROFILES

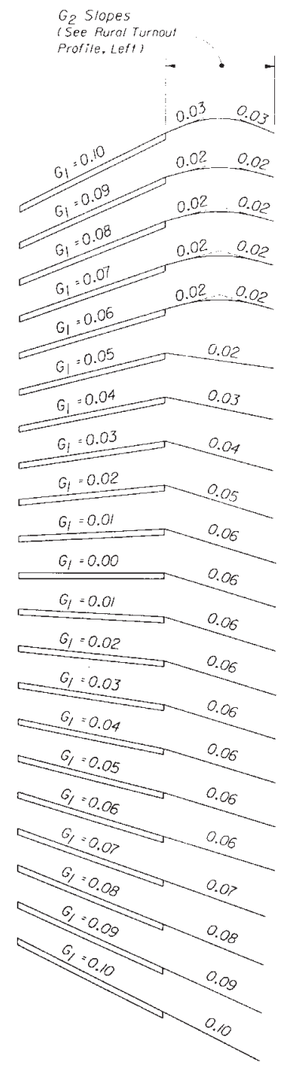

ROADWAY PAVEMENT SLOPES
AND SLOPES OF ABUTTING
RURAL TURNOUT SURFACES (G_2)

SUPERELEVATION SECTIONS

A	LENGTHS (L) (m)							
	CRESTS				SAGS			
	STRAIGHT		ROUNDED		STRAIGHT		ROUNDED	
	Desirable	Minimum	Desirable	Minimum	Desirable	Minimum	Desirable	Minimum
6-13%	0.9	0	1.5	0	0.9	0	1.5	0
14%	0.9	0	3.0	0	0.9	0	3.0	0
15%	0.9	0.8	3.0	0.9	1.5	0.9	3.0	1.5
16%	1.5	0.9	3.0	1.2	1.8	1.2	3.0	1.8
17%	1.8	1.1	3.0	1.5	2.4	1.5	3.0	2.1
18%	1.8	1.2	3.0	1.8	2.7	1.8	3.0	2.4
19%	2.1	1.4	3.0	2.1	3.3	2.1	3.6	2.7
20%	2.4	1.5	3.3	2.4	3.6	2.4	4.0	3.0
21%	2.7	1.7	3.6	2.7	4.0	2.6	4.2	3.3
22%	3.0	1.8	3.9	3.0	4.2	2.7	4.9	3.6
23%	3.0	2.0	4.2	3.2	4.2	2.9	4.9	3.8
24%	3.3	2.1	4.5	3.3	4.5	3.0	5.2	4.0
25%	3.6	2.3	4.5	3.5	4.9	3.2	5.5	4.1
26%	3.6	2.4	4.9	3.6	5.2	3.3	5.5	4.2
27%	4.0	2.6	5.2	3.8	5.2	3.5	5.8	4.4
28%	4.2	2.7	5.2	4.0	5.5	3.6	6.0	4.5
29%	NA	NA	6.7	4.2	NA	NA	6.4	5.2
30-31%	NA	NA	7.0	4.5	NA	NA	6.7	5.5
32-33%	NA	NA	7.3	4.9	NA	NA	7.0	6.0
34-36%	NA	NA	7.9	5.2	NA	NA	7.6	6.4
37-38%	NA	NA	8.2	5.5	NA	NA	7.9	6.7
39-41%	NA	NA	8.8	5.8	NA	NA	8.5	7.3
42-43%	NA	NA	9.1	6.0	NA	NA	8.8	7.6
44-46%	NA	NA	9.7	6.4	NA	NA	9.4	7.9
47-48%	NA	NA	10.0	6.7	NA	NA	9.7	8.2
49-51%	NA	NA	10.4	7.0	NA	NA	10.4	8.5
52-54%	NA	NA	11.0	7.3	NA	NA	10.7	9.1
55-56%	NA	NA	11.2	7.6	NA	NA	11.0	9.4

Rounded: Either circular, parabolic or spline curvature. The plans or the Engineer may specify a particular type of curvature.

Desirable: Desirable minimum lengths.
Minimum: Absolute minimum lengths.
} Greater lengths than minimum and desirable are recommended where practical for flatter and smoother profile.

RECOMMENDED TURNOUT PROFILE TRANSITION LENGTHS (L) (m)

PROFILE AND STORMWATER RUNOFF NOTES

1. Turnouts shall neither cause water to flow on or across the roadway pavement, nor cause water ponding or erosion within the State right of way. On all rural turnouts the transition (L) nearest the roadway shall be sloped or crowned to direct stormwater runoff to the roadside ditch. Inlets, flumes or other appropriate runoff control devices shall be constructed when runoff volumes are sufficient to cause erosion of the shoulder. Similar runoff control devices shall be constructed as necessary to properly direct and control the stormwater runoff on urban turnouts.

2. The Option 1 profile is intended for locations where roadway, turnout taper and auxiliary lane stormwater runoff volumes are relatively large. The Option 2 profile is intended for locations where runoff volumes are relatively small and/or where there is no roadside ditch.

TURNOUT PROFILES

STATE OF FLORIDA DEPARTMENT OF TRANSPORTATION
ROAD DESIGN

TURNOUTS

	Names	Dates
Designed By		
Drawn By	HSD	08/82
Checked By	JVG	08/82
F.H.W.A. Approved:		09/23/82

Approved By Freddie Simmons
State Roadway Design Engineer

Revision No.	Sheet No.	Index No.
94	6 of 6	515

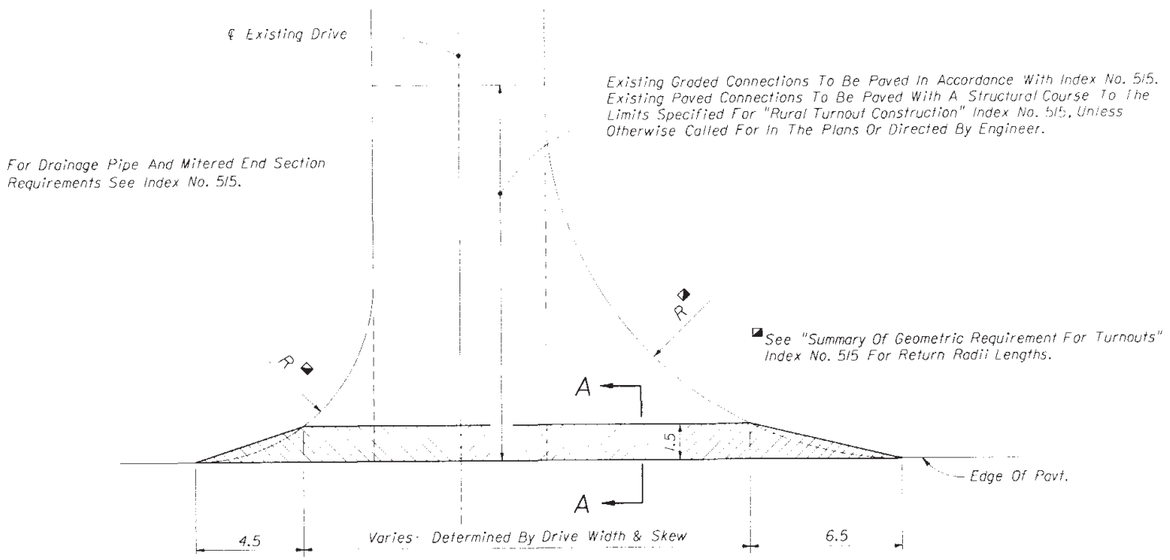

TYPE I TURNOUT
Typical Half-Section
For Automobile Traffic

TYPE II TURNOUT
Typical Half-Section
For Truck-Trailer Traffic

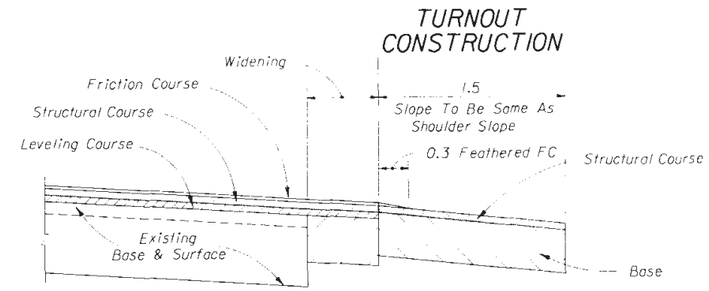

SECTION AA WITH WIDENING

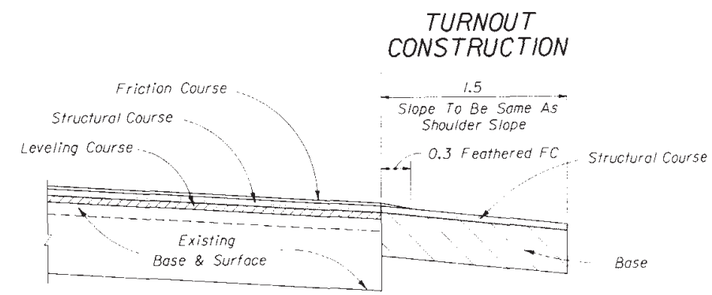

SECTION AA

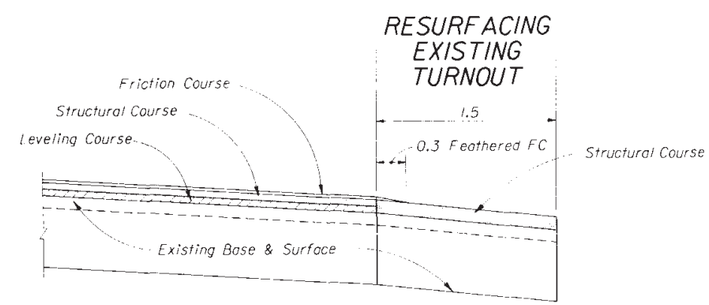

SECTION AA

AREAS FOR ONE 1.5 m DEEP TURNOUT (m^2)				
Drive Width (m)	Intersection			
	Normal		Skewed	
	Type I	Type II	Type I	Type II
3.6	22	41	27	48
4.2	23	42	28	49
4.8	24	42	29	50
5.4	25	43	30	51
6.0	26	44	31	53
6.7	27	45	32	54
7.3	28	46	33	55
7.9	29	47	34	56
8.5	30	48	35	57
9.1	31	49	36	58
9.7	32	50	37	59
10.3	32	51	38	60
10.9	33	52	39	61
11.5	34	53	40	62
12.1	35	53	41	63
12.8	36	54	43	64
13.4	37	55	44	65
14.0	38	56	45	66
14.6	39	57	46	67
15.2	40	58	47	68
15.8	41	59	48	70
16.4	42	60	49	71
17.0	43	61	50	72
17.6	43	62	51	73
18.2	44	63	52	74

PAVEMENT STRUCTURE FOR 1.5 m DEEP TURNOUTS		
Course	Material	Minimum Thickness (mm)
Structural	Asphaltic Concrete	30
Base	Optional Base Group 1	Index No. 514

Notes:

1. Turnout structural course to be the same material as roadway leveling or structure course. Structural course not required if asphalt base course and its thickness increased to match edge of roadway pavement.
2. Any Department approved pavement structure equivalence may be used at the discretion of the Engineer.
3. Additional structural strength may be required if heavy truck loads are anticipated.

GENERAL NOTES

1. Turnouts are to be constructed or resurfaced for low volume (single family, duplex, form, etc.) residential connections as directed by the Engineer.
2. Turnout construction not required for low volume residential connections where roadway shoulders are paved.
3. Connections outside the 1.5 m limit are to be constructed as directed by the Engineer.
4. The contract unit price for Turnout Construction includes the cost for excavation and base.
5. Payment for structural course to be included in roadway resurfacing pay item.
6. Payment for feathering friction course to be included in the unit price for Asphaltic Concrete Friciton Course placed on the roadway. Feathered areas will not be included in measured quantities. Feathering not required for FC-2 friction course.
7. For low volume two-lane facilities without a friction course the structural course will be the final layer.

STATE OF FLORIDA DEPARTMENT OF TRANSPORTATION
ROAD DESIGN

TURNOUTS
RESURFACING PROJECTS

	Names	Dates
Designed By	DCB	11/77
Drawn By	HKH	11/77
Checked By	JVG	11/77
F.H.W.A. Approved:		09/23/82

Approved By Freddie Simmons
State Roadway Design Engineer

Revision No.	Sheet No.	Index No.
94	1 of 1	516

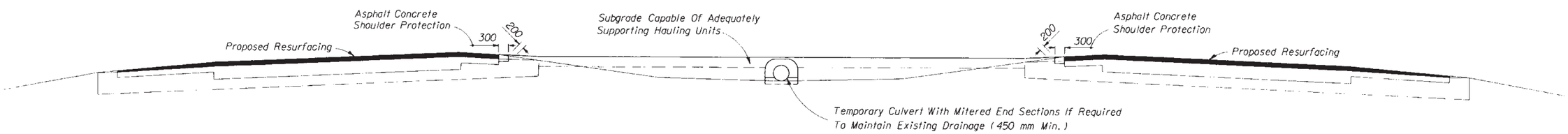

SECTION

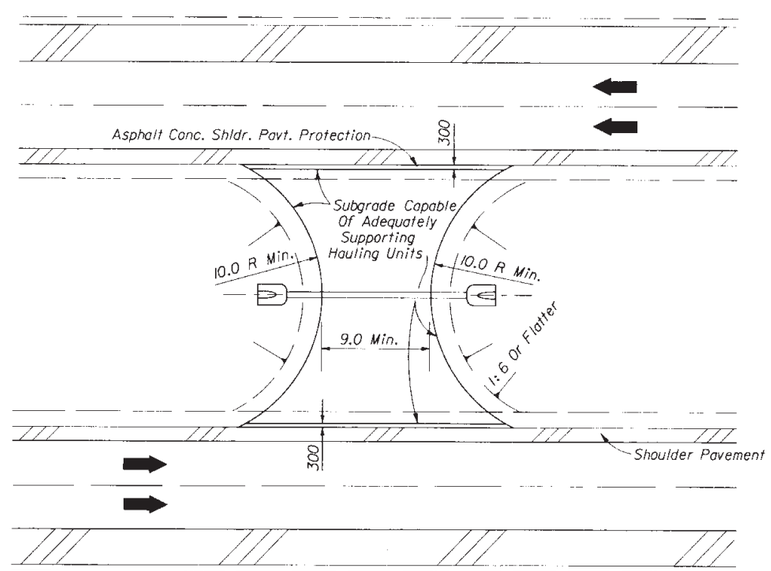

PLAN

GENERAL NOTES

1. When a crossover is no longer needed, all temporary construction shall be immediately removed and the area restored to its original condition.
2. Crossovers to be constructed where sight distance is adequate in both directions as directed by the Engineer.
3. Cost of all construction, maintenance, removal and restoration work related to temporary crossovers shall be included in the contract unit price for Maintenance of Traffic, LS.

STATE OF FLORIDA DEPARTMENT OF TRANSPORTATION
ROAD DESIGN

TEMPORARY CROSSOVER CONSTRUCTION DETAILS RURAL

	Names	Dates	Approved By Freddie Simmons State Roadway Design Engineer
Designed By			
Drawn By			
Checked By			
F.H.W.A. Approved:		10/07/80	

Revision No.	Sheet No.	Index No.
94	1 of 1	517

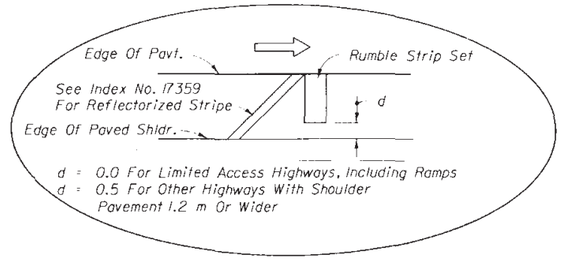

INSET A

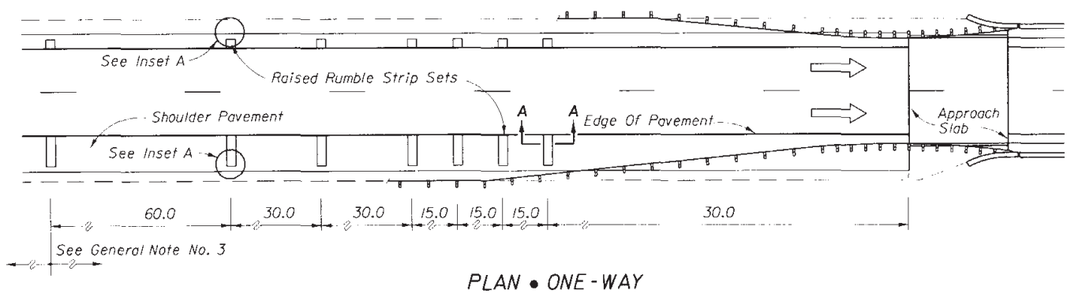

PLAN • ONE-WAY

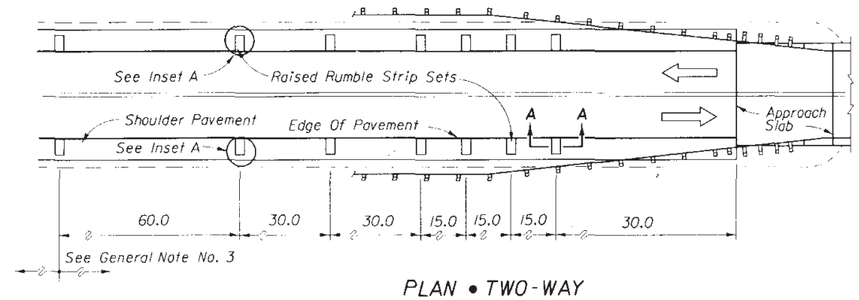

PLAN • TWO-WAY

STRUCTURES WITH LESS THAN FULL WIDTH SHOULDERS

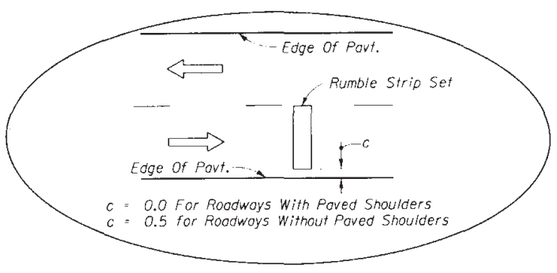

INSET B

Note: Rumble strips may be required for one or more legs of the intersection (one leg shown for spacing information). Rumble strips shall be constructed only on the legs identified in the plans. See General Note No. 1.

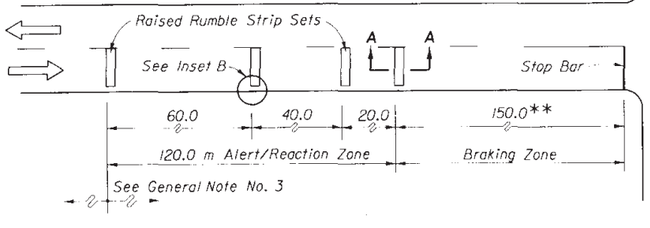

** May be decreased in urban areas with low operating speeds.

PLAN

INTERSECTIONS

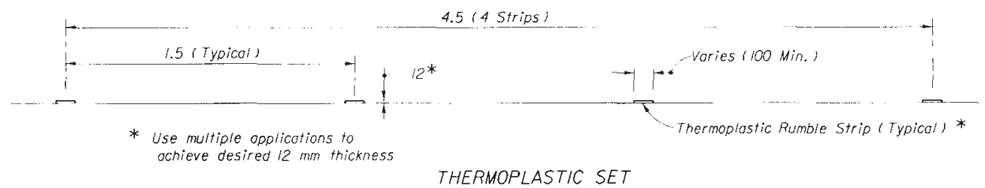

* Use multiple applications to achieve desired 12 mm thickness

THERMOPLASTIC SET

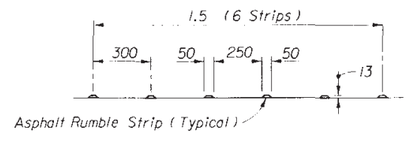

ASPHALT SET

SECTION AA • FOR THERMOPLASTIC AND ASPHALT RUMBLE STRIP SETS

GENERAL NOTES FOR RAISED RUMBLE STRIPS

1. Raised rumble strips shall be constructed on all paved shoulders approaching structures with less than full roadway width, including paved shoulders. Raised rumble strips at intersections shall be constructed only when specified in the plans.
2. Raised rumble strips are to be constructed in accordance with Section 546 of the Specifications.
3. When any portion of a curve falls within the limit of rumble strips shown in these details, additional rumble strip sets spaced at 60.0 m centers shall be constructed throughout the remainder of the approaching curve.
4. Raised rumble strips shall be paid for under the contract unit price for Rumble Strips, PS. Such price and payment shall be full compensation for all work and materials required.

   Raised rumble strips shall be paid for per set without any adjustment due to width of pavement receiving the strips or length of strips.

RAISED RUMBLE STRIPS

STATE OF FLORIDA DEPARTMENT OF TRANSPORTATION
ROAD DESIGN

RUMBLE STRIPS

	Names	Dates
Designed By	KNM/CAS	10/87
Drawn By	JBW	10/87
Checked By	KNM/JVG	10/87
F.H.W.A. Approved:		

Approved By Freddi Simmons
State Roadway Design Engineer

Revision No.	Sheet No.	Index No.
94	1 of 2	518

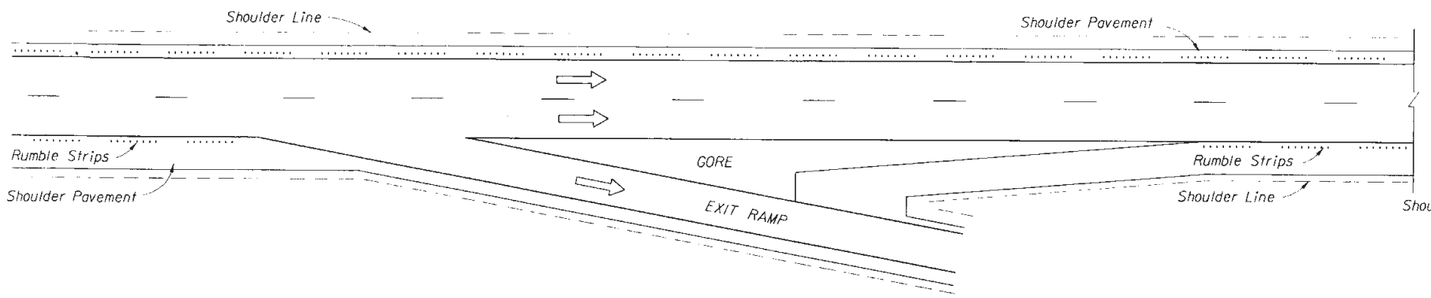

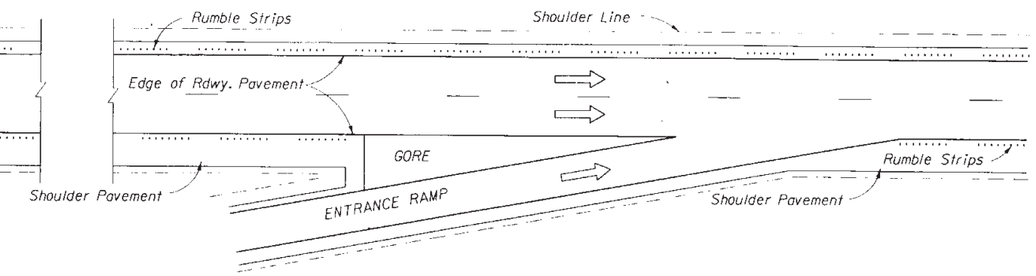

LIMITED ACCESS FACILITIES

SHOULDER GROUND-IN RUMBLE STRIP PLACEMENT

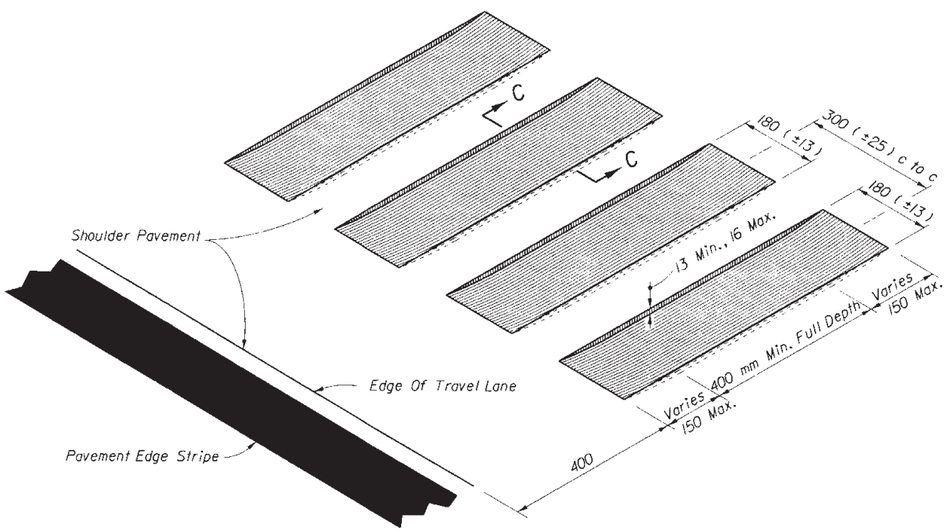

ISOMETRIC - TRANSVERSE CUT

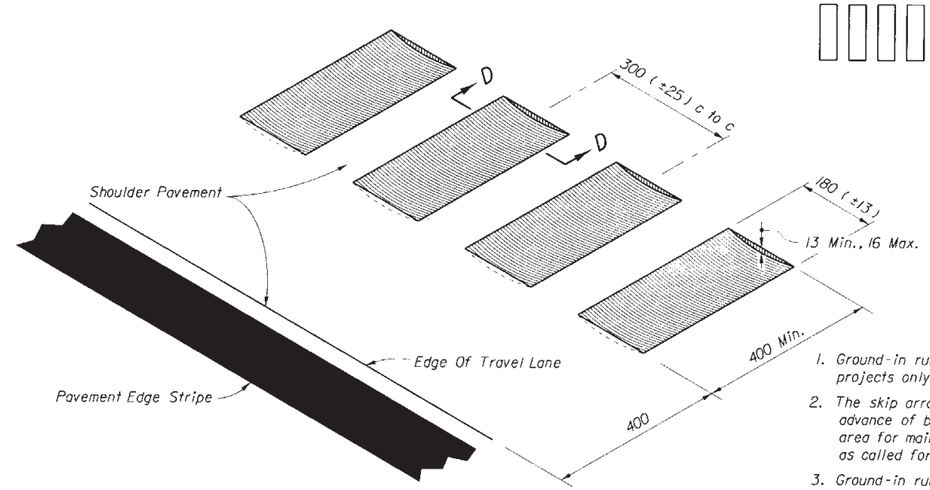

ISOMETRIC - LONGITUDINAL CUT

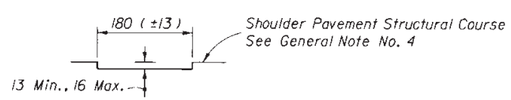

SECTION CC

TRANSVERSE CUT

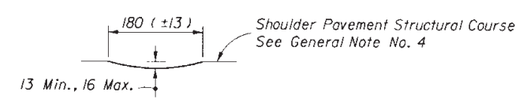

SECTION DD

LONGITUDINAL CUT

LOCATION ALONG SHOULDER (FLEXIBLE PAVEMENT)

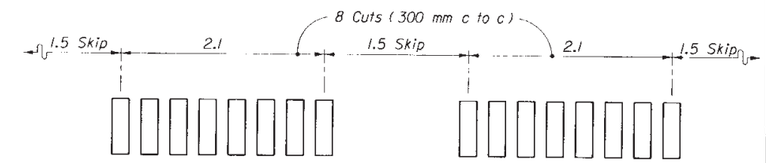

SKIP ARRAY

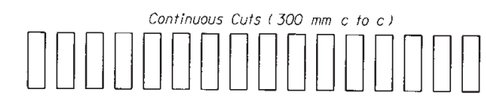

CONTINUOUS ARRAY

ARRAYS

GENERAL NOTES FOR SHOULDER GROUND-IN RUMBLE STRIPS

1. Ground-in rumble strips shall be constructed on freeway and other limited access projects only, and only when called for in the plans.
2. The skip array is the standard array. The continuous array shall be constructed in advance of bridge ends for a distance of 300 m, or back to the gore recovery area for mainline interchange bridges; and constructed at other specific locations as called for in the plans.
3. Ground-in rumble strips are to be constructed in accordance with Section 546 of the Specifications.
4. When friction course extends more than 0.3 m beyond the edge of the outer traffic lane, the extended friction course shall be bladed off back to the 0.3 m line, prior to rumble strip grinding.
5. Both arrays shall be paid for under the contract unit price for Rumble Strips (Ground-in), Kl. Such price and payment shall be full compensation for all work and materials required.

DESIGN NOTE

1. The rumble strips described on this sheet are intended for use on flexible pavement shoulders. When constructing ground-in rumble strips on existing rigid (concrete) shoulders, no rumble strips shall be located closer than 150 mm from any pavement joint. When specifying ground-in rumble strips on existing rigid shoulders their location and array shall be detailed in the plans.
2. Other methods and types of applications shall not be used unless approved in writing by the State Roadway Design Engineer. Approval will be considered only with sufficient documented justification for variance from this standard.

SHOULDER GROUND-IN RUMBLE STRIPS

STATE OF FLORIDA DEPARTMENT OF TRANSPORTATION
ROAD DESIGN

RUMBLE STRIPS

	Names	Dates
Designed By	COMM	11/93
Drawn By	HKH	11/93
Checked By	FLS/JVG	11/93

Approved By Freddie Simmons
State Roadway Design Engineer

Revision No.	Sheet No.	Index No.
94	2 of 2	518

F.H.W.A. Approved:

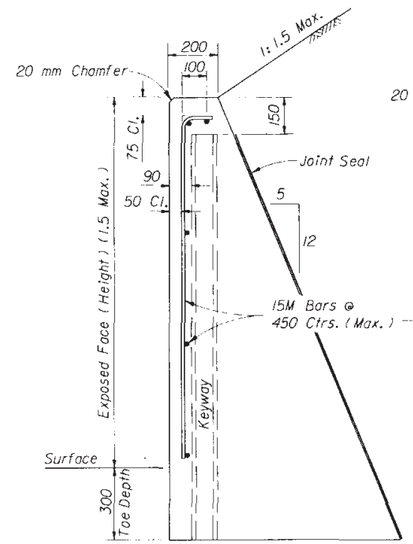

SECTION

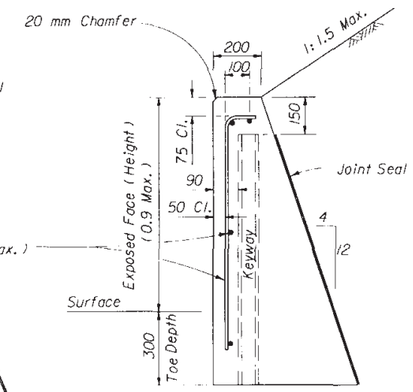

SECTION

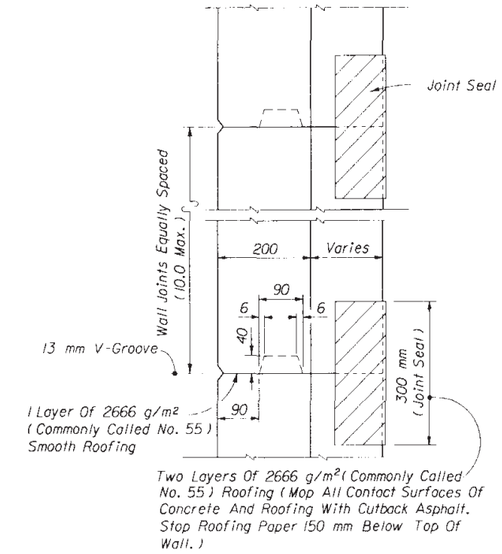

KEY DETAIL (TOP VIEW)

ESTIMATED QUANTITIES FOR WALL

HEIGHT (m) (EXPOSED FACED)	PER LINEAR METER OF WALL	
	CLASS I CONCRETE (m^3)	STEEL (kg)
0.3	0.180	7
0.6	0.315	7
0.9	0.480	10
1.2	0.769	13
1.5	1.035	13

GRAVITY WALL NOTES

1. Gravity walls constructed as extensions of reinforced concrete retaining walls, except walls of proprietary designs, shall have the same face texture and finish as the reinforced concrete retaining wall.
2. Cost of reinforcing steel, face texture, finish and joint seal to be included in the contract unit price for Class I Concrete (Retaining Walls), M3.

GRAVITY WALL

STATE OF FLORIDA DEPARTMENT OF TRANSPORTATION
ROAD DESIGN

ALUMINUM PIPE HANDRAILS, GRAVITY WALLS AND STEPS

	Names	Dates
Designed By		
Drawn By	CDR	02/68
Checked By	RHC	02/68
F.H.W.A. Approved:		03/20/75

Approved By Freddie Simmons
State Roadway Design Engineer

Revision No.	Sheet No.	Index No.
94	1 of 2	520

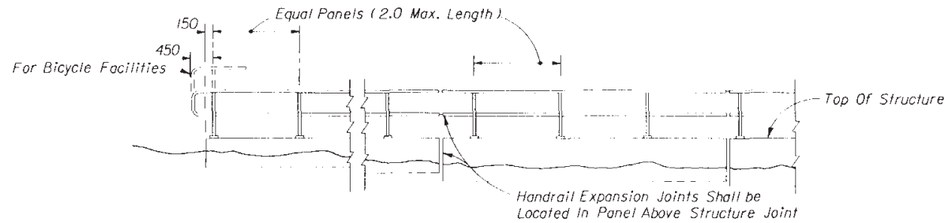

ELEVATION

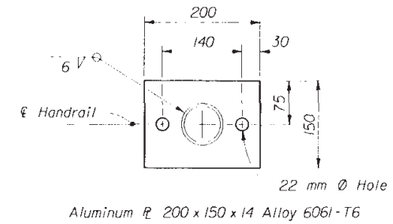

BASE PLATE

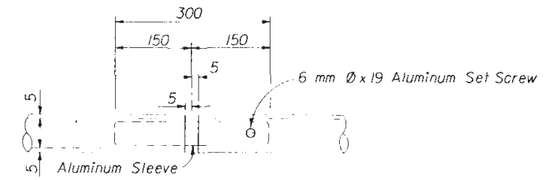

EXPANSION JOINT

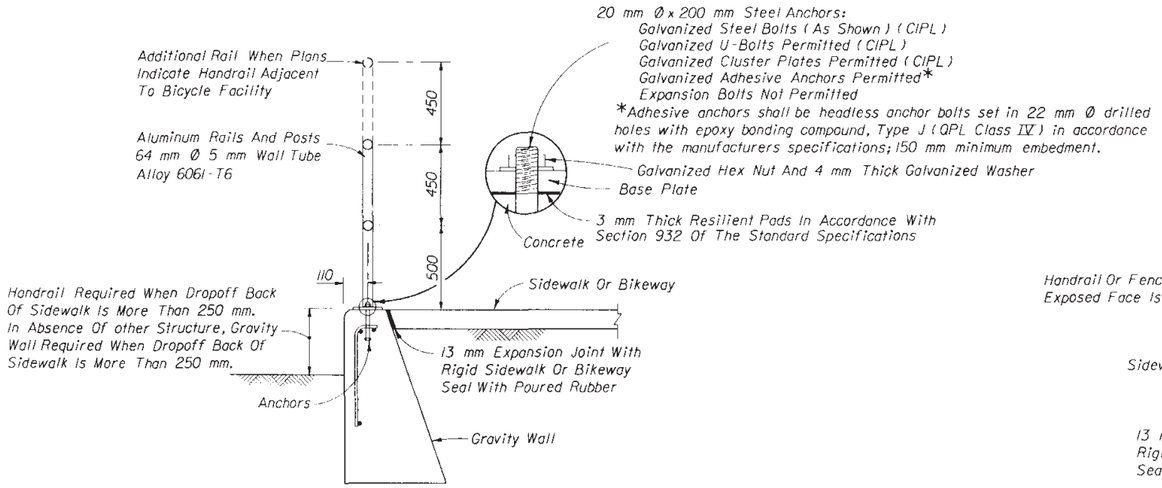

MOUNT ON GRAVITY WALL SHOWN

TYPICAL SECTIONS AT POST

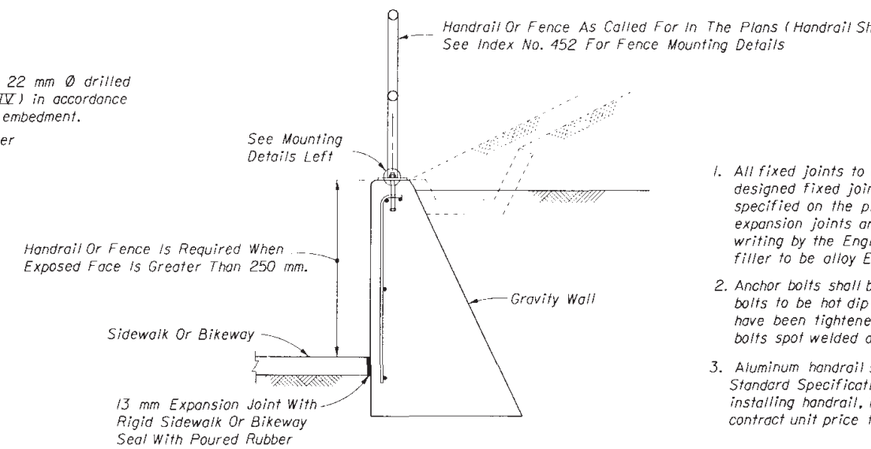

PIPE HANDRAIL NOTES

1. All fixed joints to be either welded all around and ground smooth; or, commercially designed fixed joint systems (soldered, brazed, fused, bonded or shrink fitted) specified on the plans or approved by the Engineer. Mechanical joints other than expansion joints are not permitted unless specified on the plans or approved in writing by the Engineer. Posts shall be connected to base by weld only. Weld filler to be alloy ER5356, ER5556 or ER5183.
2. Anchor bolts shall be in accordance with ASTM A36 or A307. Nuts, washers, and bolts to be hot dip galvanized in conformance with ASTM A153. After the nuts have been tightened, the anchor bolt threads shall be distorted or the nuts and bolts spot welded and coated with zinc compound.
3. Aluminum handrail shall be constructed in accordance with Section 515 of the Standard Specifications. Payment shall be full compensation for furnishing and installing handrail, including mounting hardware, and shall be paid for under the contract unit price for Pipe Handrail (Aluminum), MI.

ALUMINUM PIPE HANDRAIL

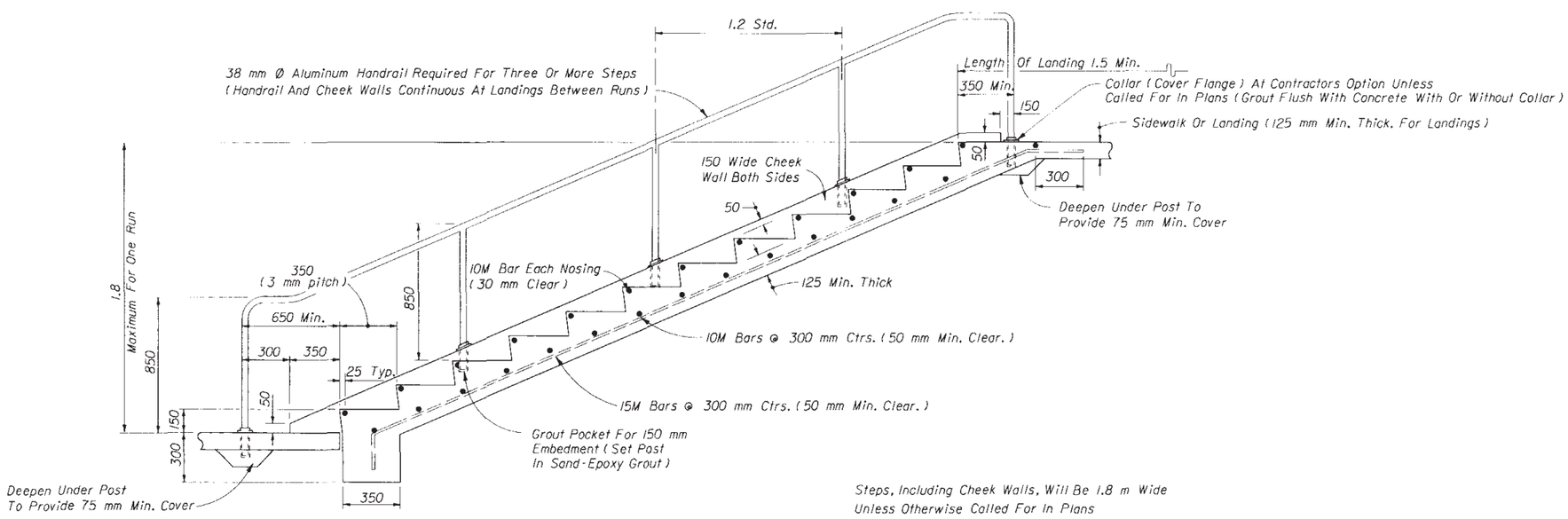

Steps, Including Cheek Walls, Will Be 1.8 m Wide
Unless Otherwise Called For In Plans

CONCRETE STEPS

CONCRETE STEPS NOTES

1. 12 risers maximum between landings.
2. Ratio of riser height to tread depth = 2R(mm)+T(mm) = 650 mm (150 mm riser and 350 mm tread shown).
3. For steps parallel to and adjoining walls, delete adjoining cheek wall and mount handrail to wall at height and length shown.
4. Aluminum handrail shall be constructed in accordance with Section 515 of the Standard Specifications. Payment shall be full compensation for furnishing and installing handrail, including mounting hardware, and shall be paid for under the contract unit price for Pipe Handrail (Aluminum), MI.
5. Cost of concrete steps, landings and cheek walls shall be paid for under the contract unit price for Class I Concrete (Roadway), M3. Cost of reinforcing steel shall be paid for under the contract unit price for Reinforcing Steel (Roadway), KG.

STATE OF FLORIDA DEPARTMENT OF TRANSPORTATION
ROAD DESIGN

ALUMINUM PIPE HANDRAILS, GRAVITY WALLS AND STEPS

	Names	Dates	Approved By Freddie Simmons State Roadway Design Engineer		
Designed By					
Drawn By	CDR	02/68			
Checked By	RHC	02/68	Revision No.	Sheet No.	Index No.
F.H.W.A. Approved:		03/20/75	94	2 of 2	520

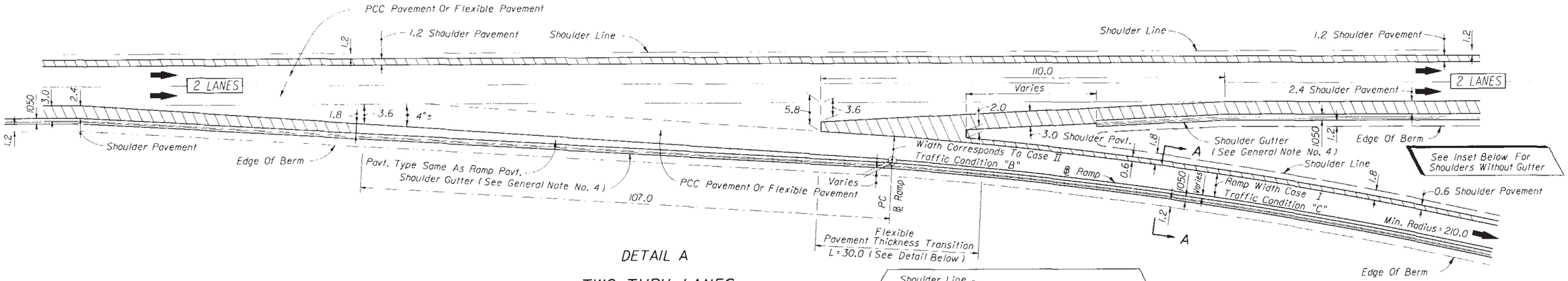

DETAIL A

TWO THRU LANES

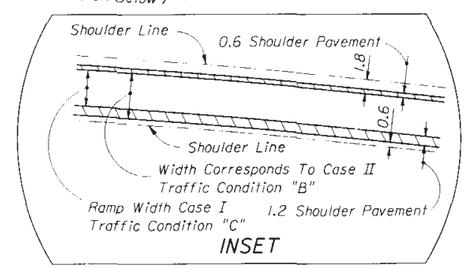

INSET

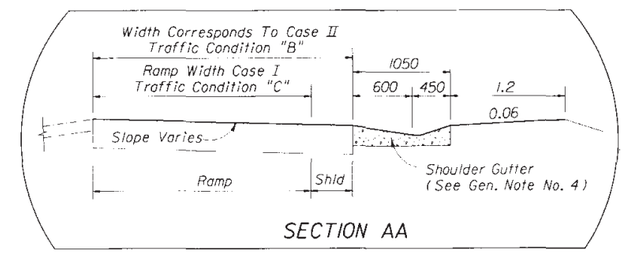

SECTION AA

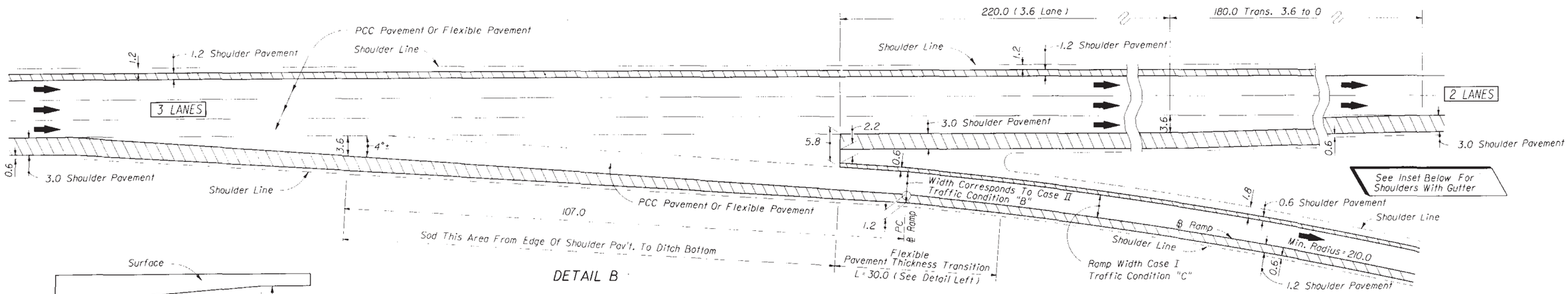

DETAIL B

THREE APPROACH LANES - TWO THRU LANES

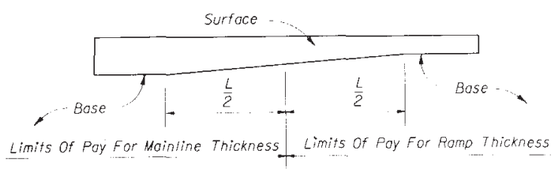

FLEXIBLE PAVEMENT THICKNESS TRANSITION

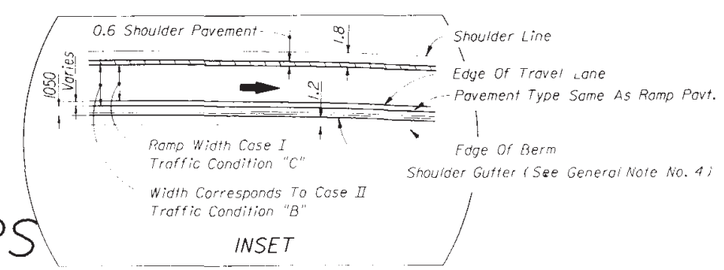

INSET

NOTE: For General Notes See Sheet No. 2

EXIT TERMINALS

SINGLE - LANE RAMPS

STATE OF FLORIDA DEPARTMENT OF TRANSPORTATION
ROAD DESIGN

RAMP TERMINALS

	Names	Dates
Designed By	EHH	01/65
Drawn By	HFW	01/65
Checked By	RLO	06/67
F.H.W.A. Approved:		07/18/75

Approved By Freddie Simmons
State Roadway Design Engineer

Revision No.	Sheet No.	Index No.
94	1 of 5	525

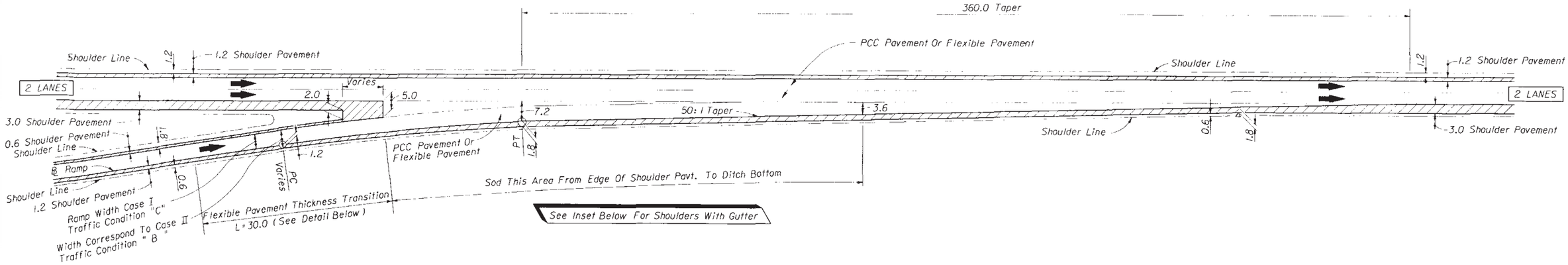

DETAIL C

TWO THRU LANES

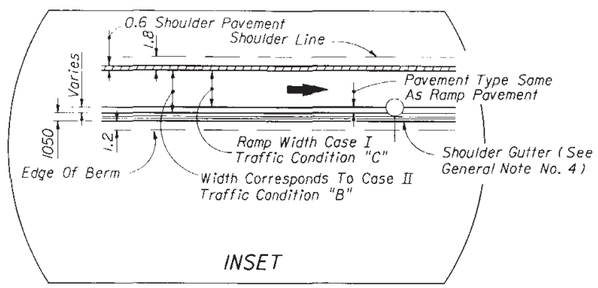

INSET

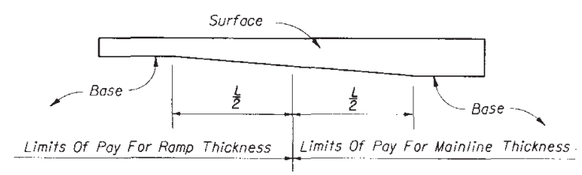

FLEXIBLE PAVEMENT THICKNESS TRANSITION

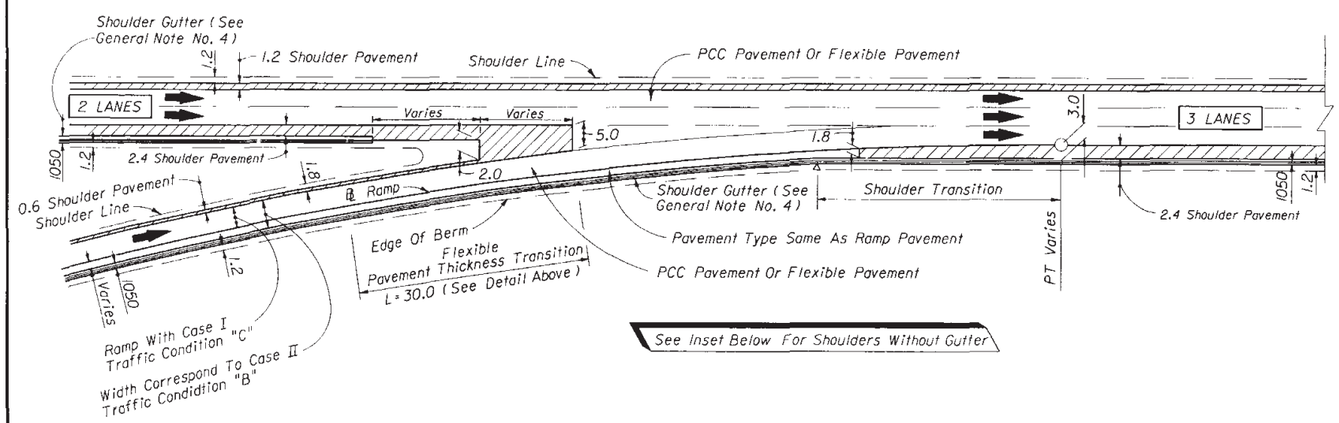

DETAIL D

WITH ADDED LANE

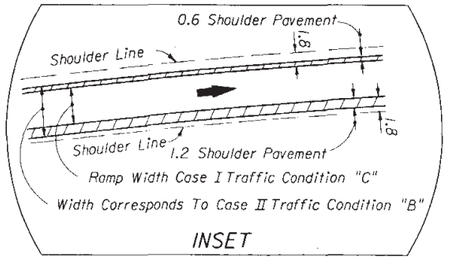

INSET

GENERAL NOTES

1. Exit and entrance terminals as detailed shall not be used on ramps for which a speed of 80 km/h or greater cannot be maintained. For such ramps, parallel deceleration and acceleration lanes shall be used in place of tapers with lengths set according to AASHTO.

2. (a.) PCC Pavement Projects:
   Where shoulder pavement adjacent to shoulder gutter is less than 1.8 m wide, it shall be identical to the adjacent roadway pavement beginning with the tranverse joint nearest the point of 1.8 m width.

   (b.) Flexible Pavement Projects:
   Where shoulder pavement used in conjunction with shoulder gutter is less than 1.8 m uniform width, it shall be identical to the adjacent roadway pavement.

3. For concrete pavement joint details and layouts at entrance and exit ramp terminals see Index No. 305.

4. For shoulder gutter applications refer to the FDOT Drainage Manual.

ENTRANCE TERMINALS

SINGLE-LANE RAMPS

STATE OF FLORIDA DEPARTMENT OF TRANSPORTATION
ROAD DESIGN

RAMP TERMINALS

	Names	Dates
Designed By	EHH	01/65
Drawn By	HFW	01/65
Checked By	RLO	06/67
F.H.W.A. Approved:		07/18/75

Approved By Freddie Simmons
State Roadway Design Engineer

Revision No.	Sheet No.	Index No.
94	2 of 5	525

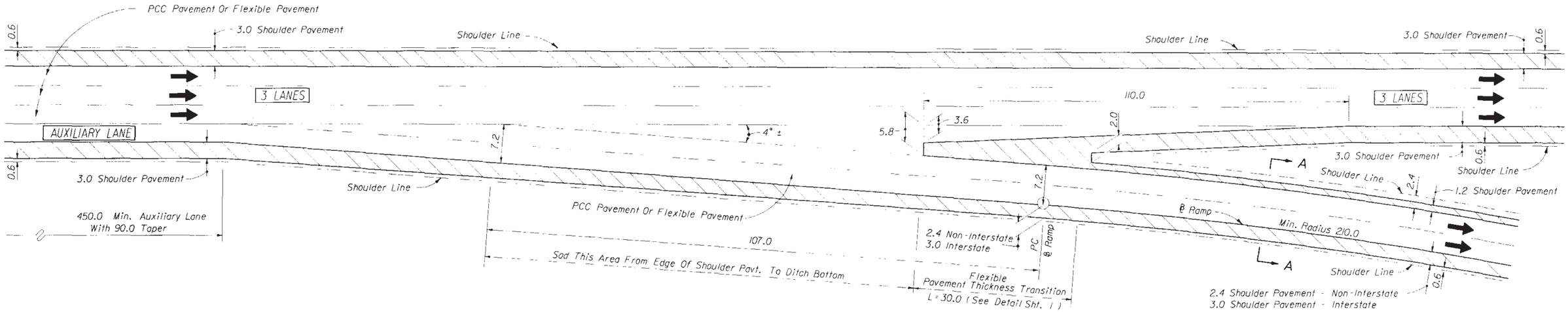

THREE THRU LANES - APPROACH AUXILIARY LANE

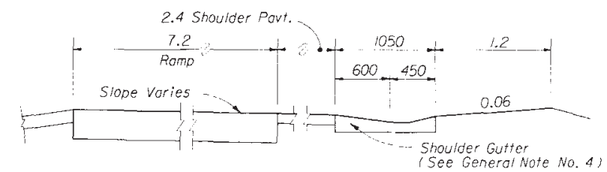

SECTION WHEN SHOULDER GUTTER USED

SECTION AA

EXIT TERMINALS

TWO-LANE RAMPS

STATE OF FLORIDA DEPARTMENT OF TRANSPORTATION
ROAD DESIGN

RAMP TERMINALS

	Names	Dates
Designed By	DCB	07/86
Drawn By	dds	07/86
Checked By	DCB	07/86
F.H.W.A. Approved:		11/07/86

Approved By Freddie Simmons
State Roadway Design Engineer

Revision No.	Sheet No.	Index No.
94	3 of 5	525

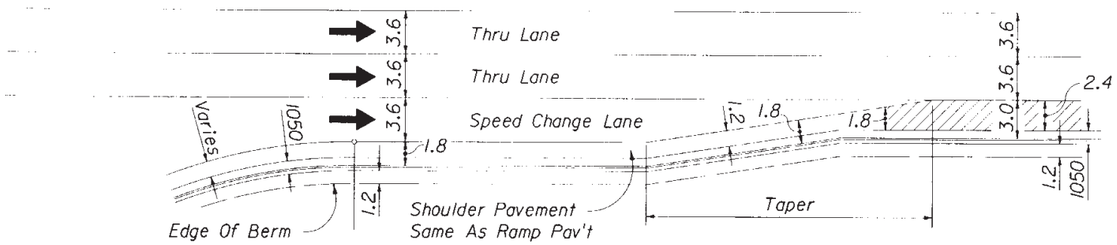

ACCELERATION LANE WITH SHOULDER GUTTER

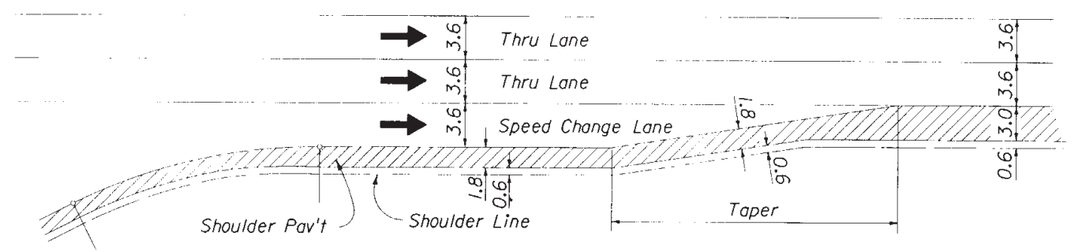

ACCELERATION LANE WITHOUT SHOULDER GUTTER

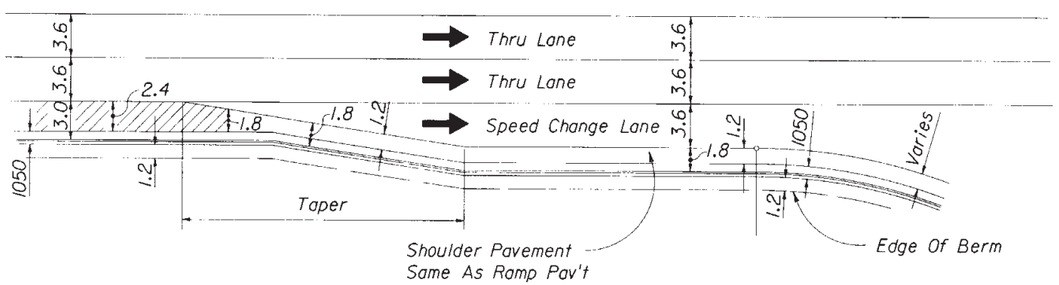

DECELERATION LANE WITH SHOULDER GUTTER

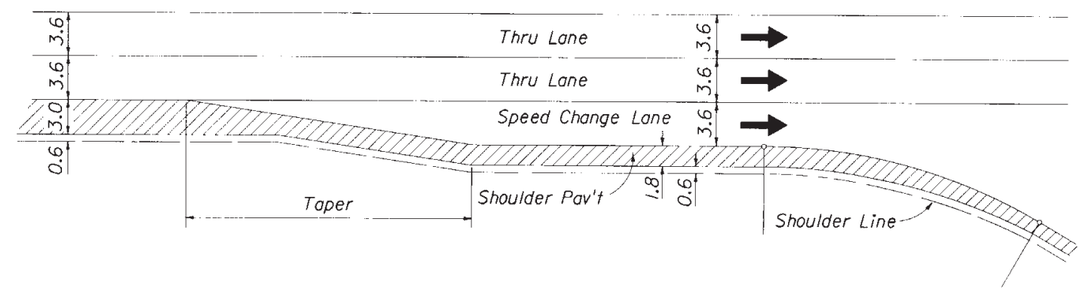

DECELERATION LANE WITHOUT SHOULDER GUTTER

SHOULDER TREATMENT

AT SPEED CHANGE LANES AT EXPRESSWAY RAMP TERMINALS

EXPRESSWAY RAMP TERMINALS

STATE OF FLORIDA DEPARTMENT OF TRANSPORTATION
ROAD DESIGN

RAMP TERMINALS

	Names	Dates
Designed By	EHH	01/65
Drawn By	HFW	01/65
Checked By	RLO	06/67
F.H.W.A. Approved:		07/18/75

Approved By Freddie Simmons
State Roadway Design Engineer

Revision No.	Sheet No.	Index No.
94	4 of 5	525

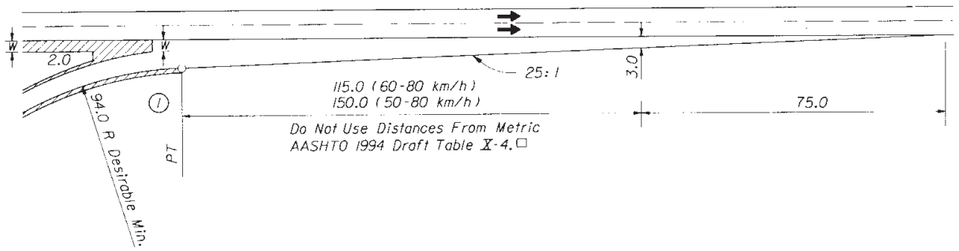

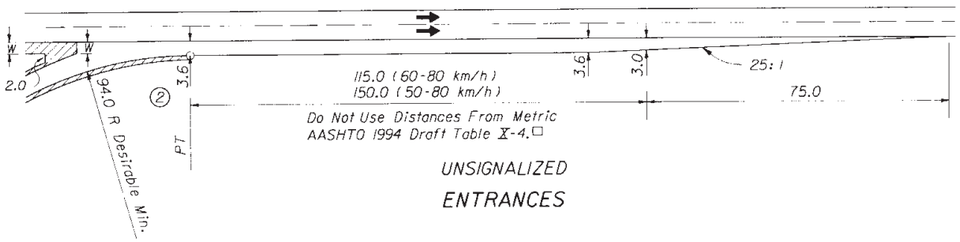

UNSIGNALIZED
ENTRANCES

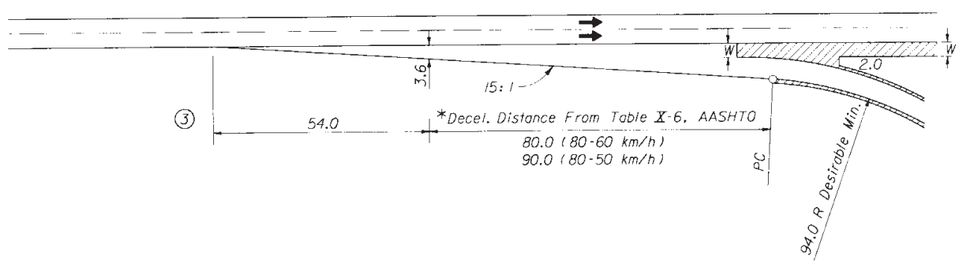

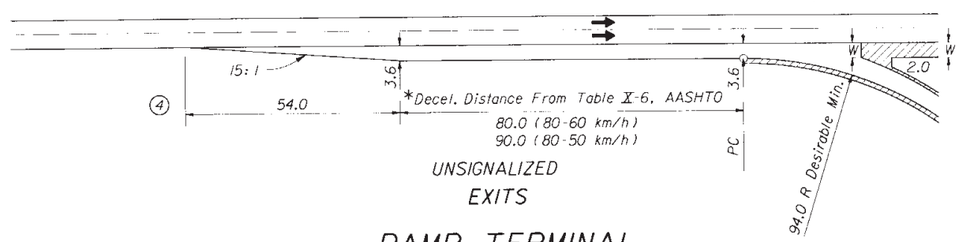

UNSIGNALIZED
EXITS

RAMP TERMINAL

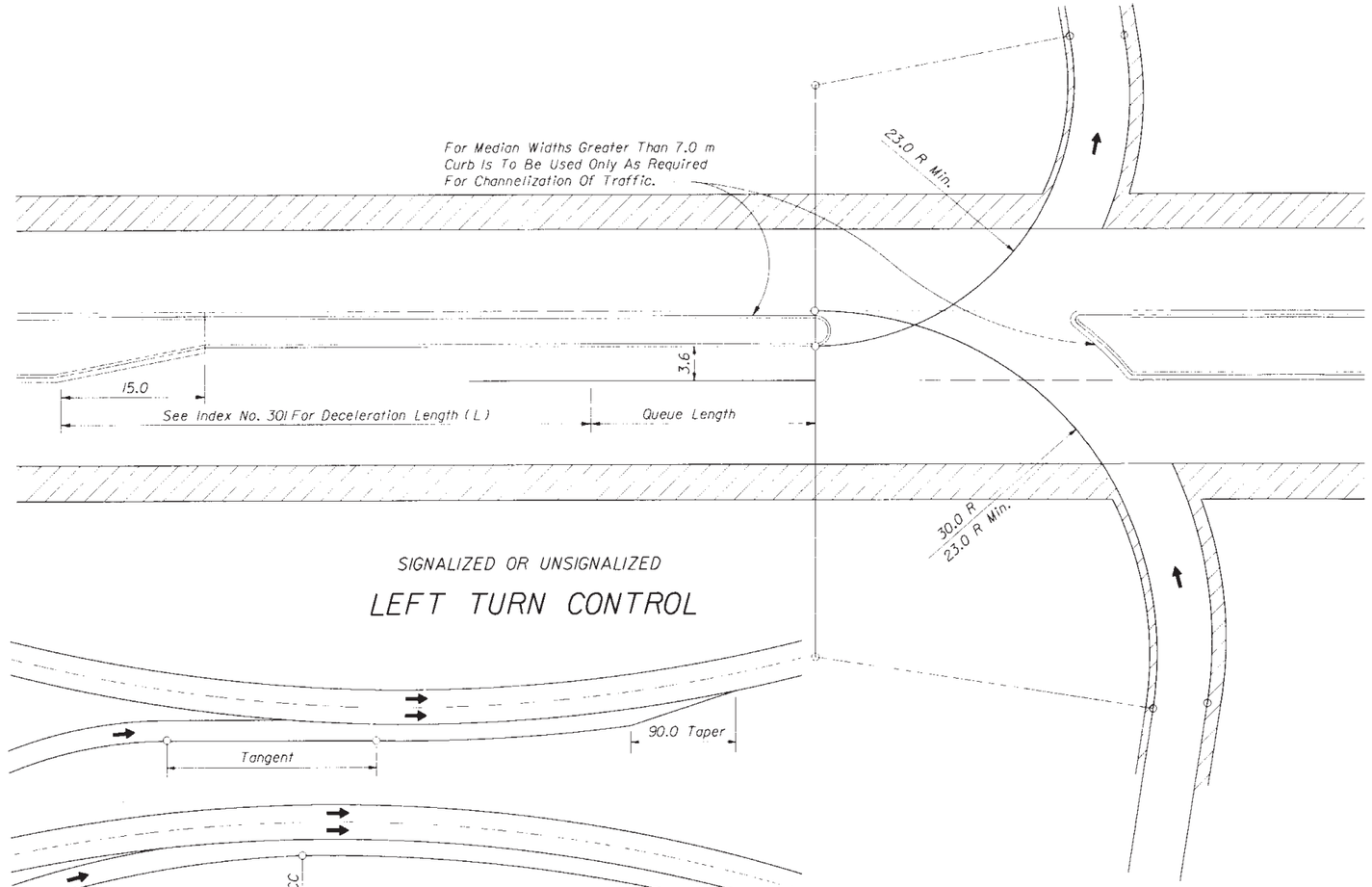

SIGNALIZED OR UNSIGNALIZED

LEFT TURN CONTROL

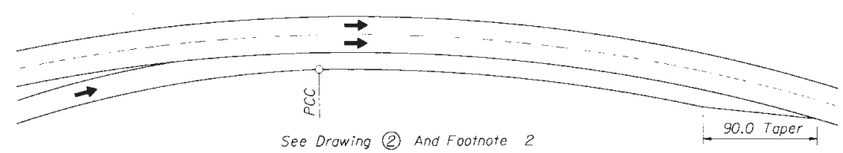

See Drawing 2 And Footnote 2

UNSIGNALIZED
ENTRANCES

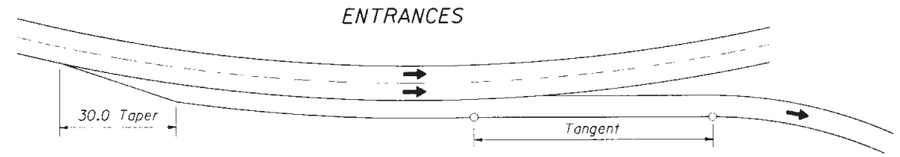

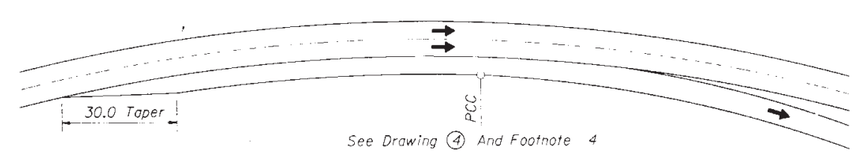

See Drawing 4 And Footnote 4

UNSIGNALIZED
EXITS

NOTE: Entrances and exits on curves should be avoided when possible.

ENTRANCES AND EXITS ON CURVES

FOOTNOTES:

W Normal shoulder pavement width

* Adjust for grades if greater than 2% (See Table X-5, AASHTO).

□ The distances published in the final metric AASHTO 1994 are to be used only after notice is given by special provision of acceptance by the Department.

1. Standard cross road entrance terminals. To be used when roadway alignment is tangent and no bridges are located within the merging lane.
2. Parallel cross road entrance terminals. Recommended when a bridge is located within the merging lane, turning roadway speed is less than 60% of thru roadway speed or for the combinations of horizontal alignment shown elsewhere on this sheet.
3. Standard cross road exit terminal. To be used when roadway alignment is tangent.
4. Parallel cross road exit terminals. Recommended when exit is partially hidden over the crest of vertical curve or when turning roadway speed is less than 60% of the thru roadway speed, or for the combinations of horizontal alignment shown elsewhere on this sheet.

CROSSROAD TERMINALS

STATE OF FLORIDA DEPARTMENT OF TRANSPORTATION
ROAD DESIGN

RAMP TERMINALS

	Names	Dates
Designed By	EHH	1/65
Drawn By	HFW	1/65
Checked By	RLO	6/67
F.H.W.A. Approved:		7/25/75

Approved By Freddie Simmons
State Roadway Design Engineer

Revision No.	Sheet No.	Index No.
94	5 of 5	525

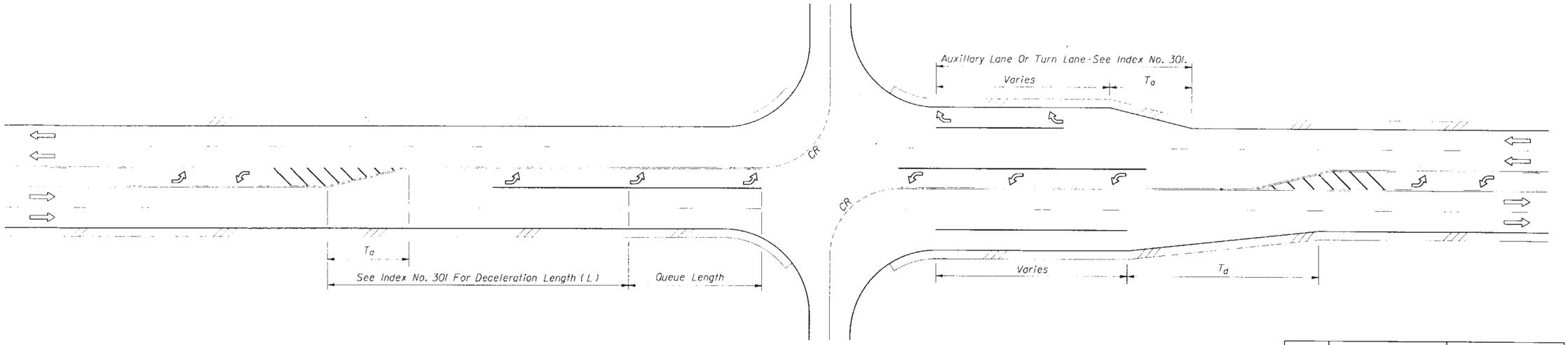

4-LANE UNDIVIDED WITH OPTIONAL LANE

DESIGN SPEED (km/h)	T_a (METERS) ADD LANE	T_d LANE DROP
< 50	15.0 (±4:1)	25:1
50-70		30:1
> 70		40:1

Note: For locations with unrelocatable control points minimum taper rates for lane drop (T_d) will be 20:1.

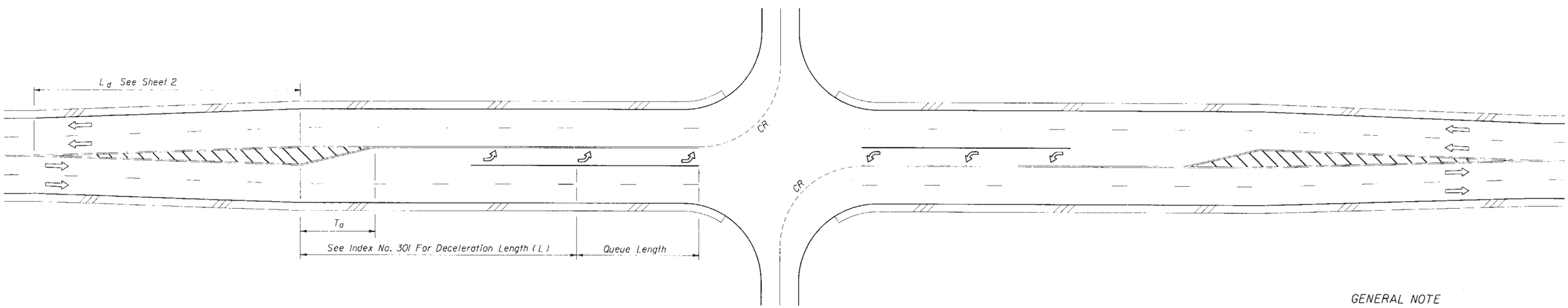

4-LANE UNDIVIDED FLARED - SYMMETRICAL

GENERAL NOTE

1. For pavement markings refer to Index No. 17346.

INTERSECTION TURNS AND STORAGE

STATE OF FLORIDA DEPARTMENT OF TRANSPORTATION
ROAD DESIGN

ROADWAY TRANSITIONS

	Names	Dates
Designed By	KNM	9/89
Drawn By	JBW	9/89
Checked By	KNM/JVG	9/89
F.H.W.A. Approved:		

Approved By Freddie Simmons
State Roadway Design Engineer

Revision No.	Sheet No.	Index No.
94	1 of 8	526

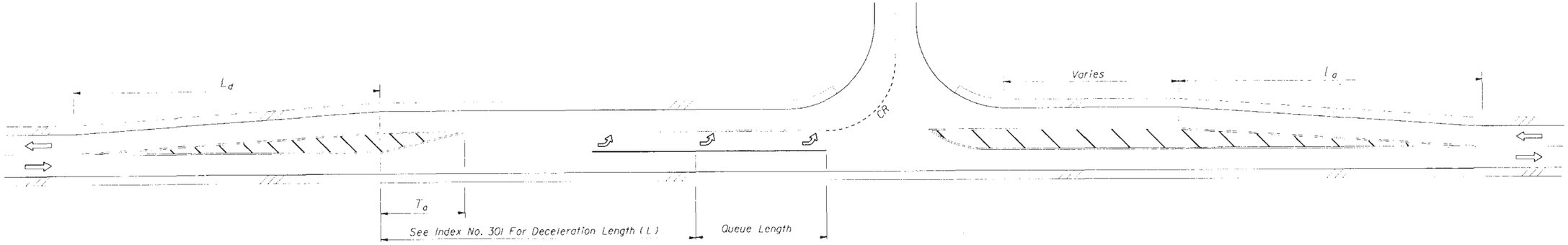

LEFT SIDE WIDENING

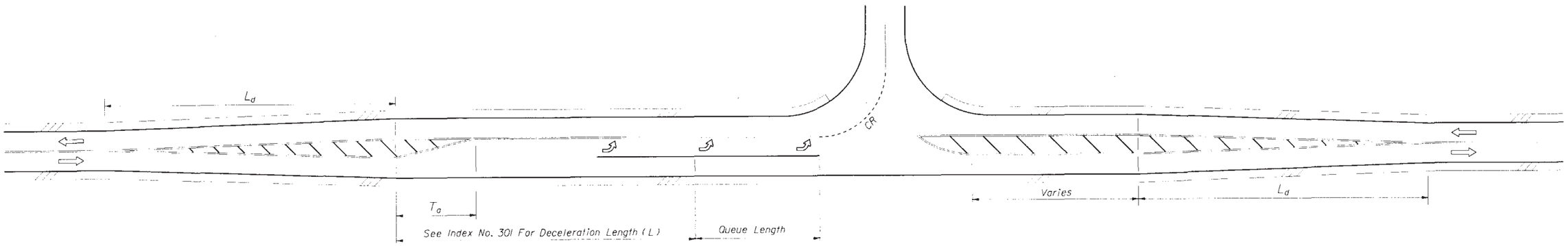

CENTERED WIDENING

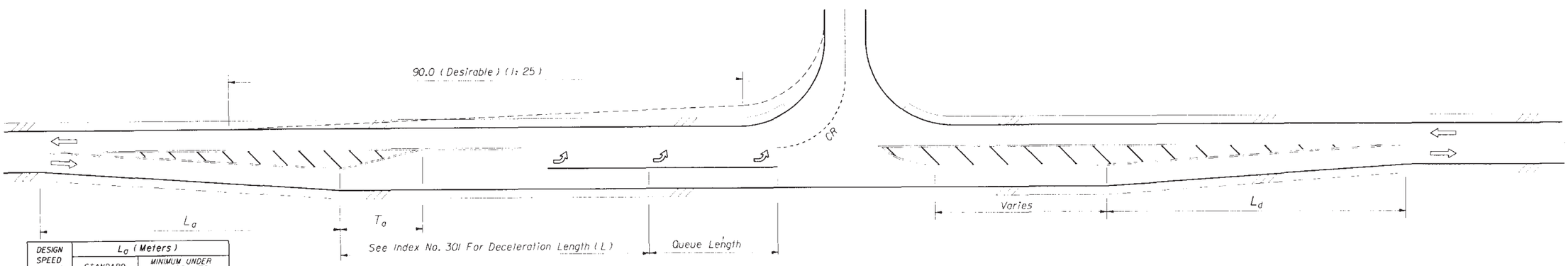

RIGHT SIDE WIDENING

DESIGN SPEED (km/h)	L_a (Meters)	
	STANDARD	MINIMUM UNDER RESTRAINTS
50	60	40
60	85	45
70	155	50
80	180	55
100	225	75

(km/h)	L_d (Meters)	
50	55	40
60	75	45
70	90	50
80	110	55
100	145	75

FLARED & PAINTED LEFT TURNS FOR 2-LANE 2-WAY ROADWAYS

STATE OF FLORIDA DEPARTMENT OF TRANSPORTATION
ROAD DESIGN

ROADWAY TRANSITIONS

	Names	Dates
Designed By	RER/JVG	9/89
Drawn By	JBW	9/89
Checked By	RER/JVG	9/89
F.H.W.A. Approved:		

Approved By Freddie Simmons
State Roadway Design Engineer

Revision No.	Sheet No.	Index No.
94	2 of 8	526

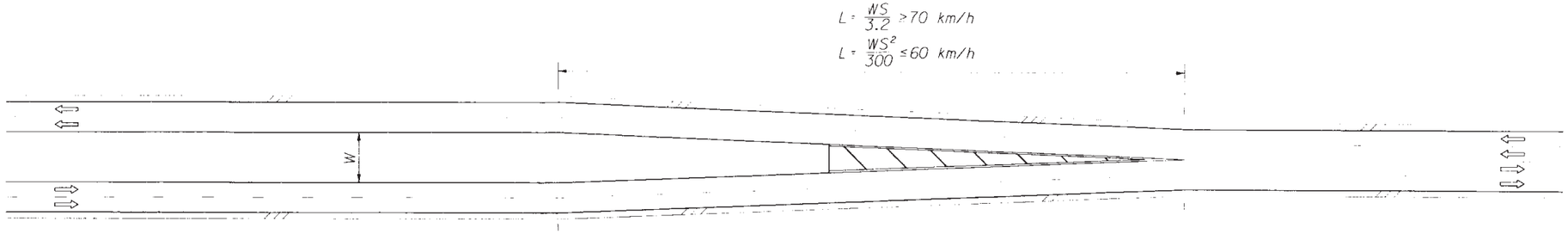

4-LANE DIVIDED TO 4-LANE UNDIVIDED

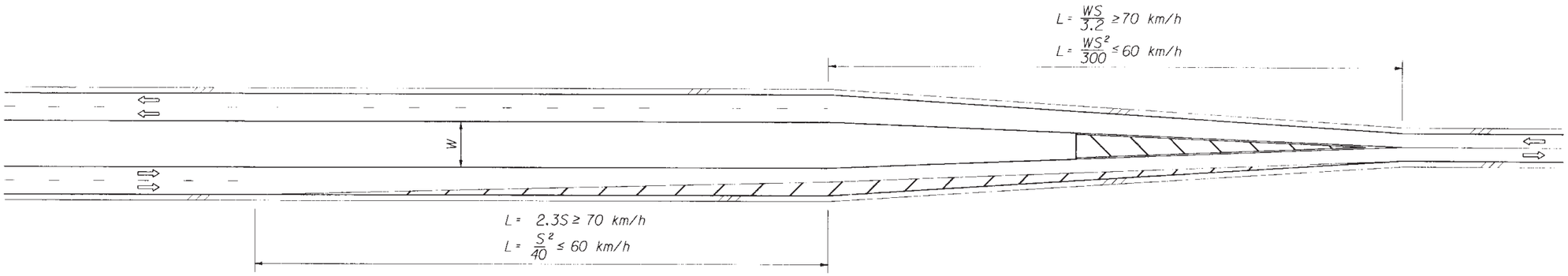

4-LANE DIVIDED TO 2-LANE UNDIVIDED

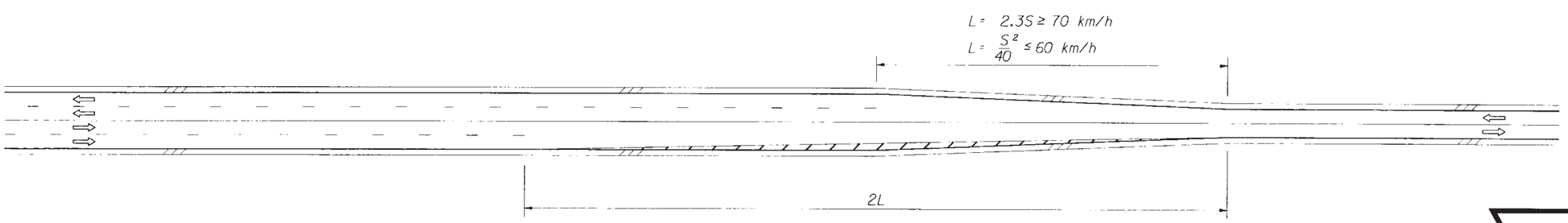

4-LANE UNDIVIDED TO 2-LANE UNDIVIDED

S = Design speed (km/h).

LANE DIVERGENCE AND CONVERGENCE FOR CENTERED ROADWAYS

STATE OF FLORIDA DEPARTMENT OF TRANSPORTATION
ROAD DESIGN

ROADWAY TRANSITIONS

	Names	Dates
Designed By	KNM	9/89
Drawn By	JBW	9/89
Checked By	KNM/JVG	9/89
F.H.W.A. Approved:		

Approved By Freddie Simmons
State Roadway Design Engineer

Revision No.	Sheet No.	Index No.
94	3 of 8	526

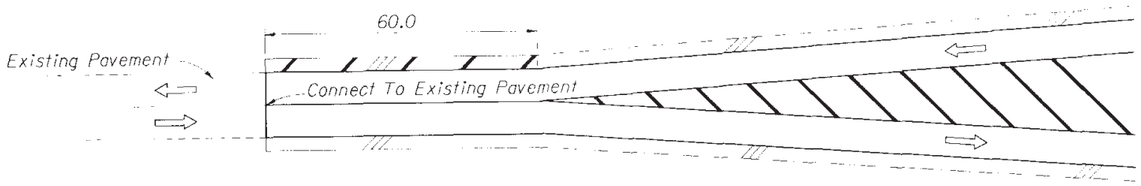

CONNECTING FLARE WITH PAVED SHOULDERS TO
EXISTING ROADWAY WITHOUT PAVED SHOULDERS

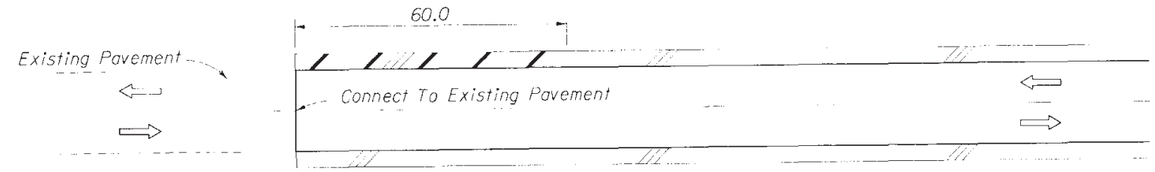

CONNECTING SIMILAR WIDTH PAVEMENTS

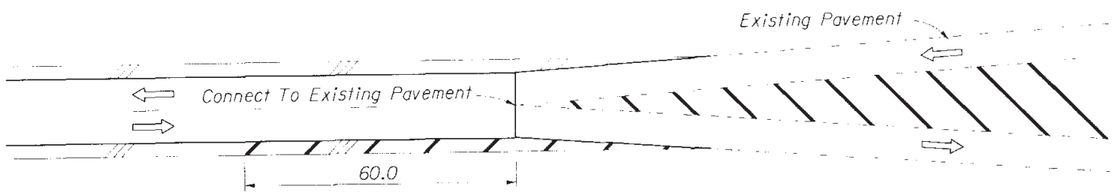

CONNECTING ROADWAY WITH PAVED SHOULDERS TO
EXISTING SYMETRICAL FLARE WITHOUT PAVED SHOULDERS

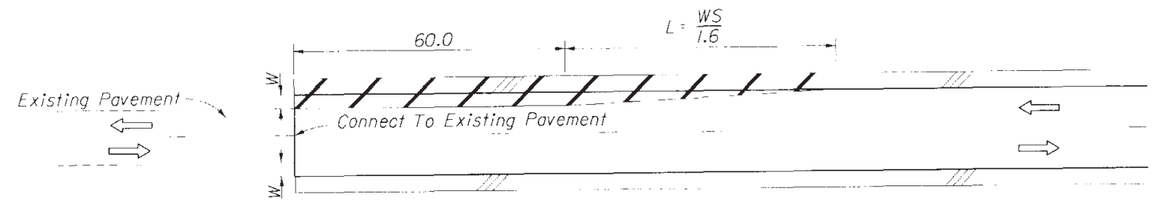

CONNECTING DIFFERENT WIDTH PAVEMENTS

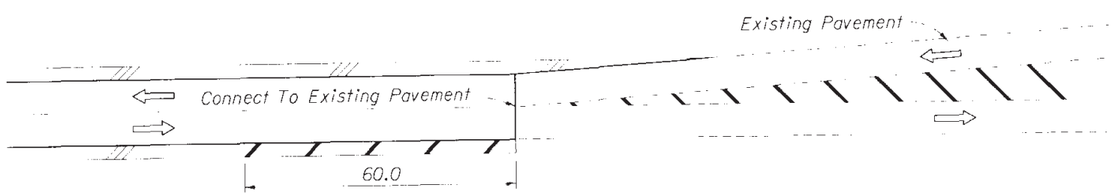

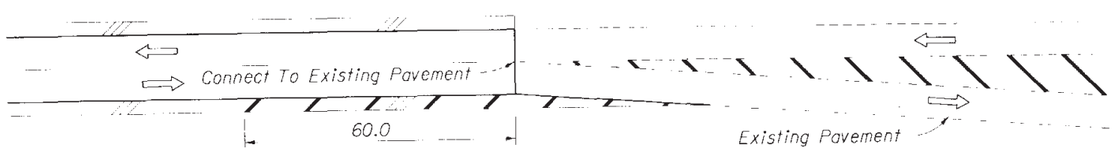

CONNECTING ROADWAY WITH PAVED SHOULDERS TO
EXISTING ASYMETRICAL FLARE WITHOUT PAVED SHOULDERS

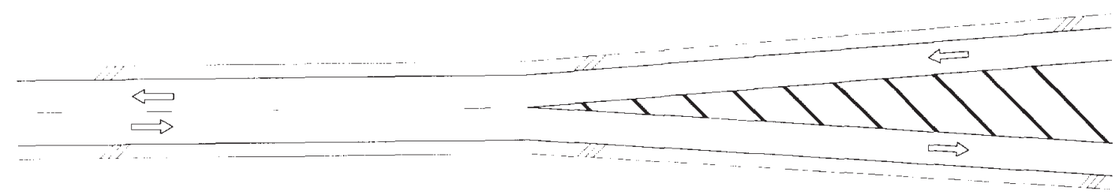

FLARED - PAVED SHOULDERS

S = Design speed (km/h).

STATE OF FLORIDA DEPARTMENT OF TRANSPORTATION
ROAD DESIGN

ROADWAY TRANSITIONS

	Names	Dates
Designed By	KNM	9/89
Drawn By	JBW	9/89
Checked By	KNM/JVG	9/89
F.H.W.A. Approved:		

Approved By Freddie Simmons
State Roadway Design Engineer

Revision No.	Sheet No.	Index No.
94	4 of 8	526

PAVED SHOULDER TREATMENT AT TRANSITIONS AND CONNECTIONS

7.0 m Median			
Design Speed (km/h)	X* (meters)	Y (meters)	Z (meters)
50	116.0	60.0	
60	86.0	90.0	
70	16.0	160.0	
80	15.0		180.0
90	15.0		205.0
100	15.0		225.0
110	15.0		250.0

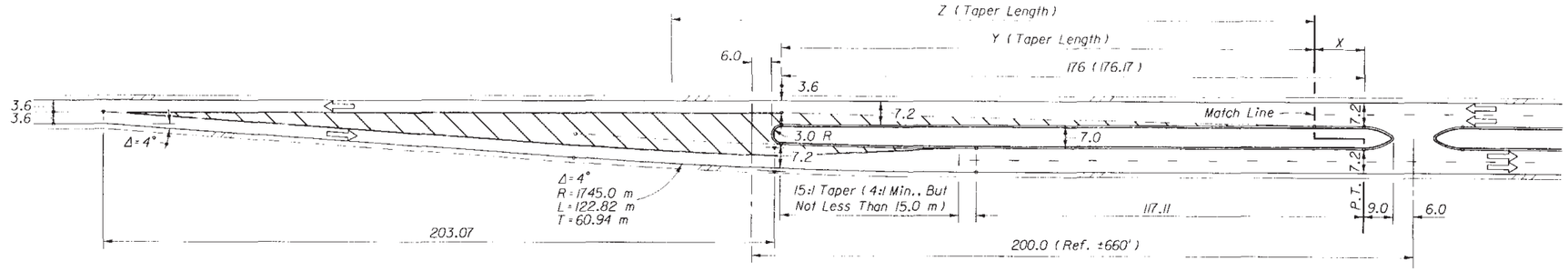

7.0 m MEDIAN

12.0 m Median			
Design Speed (km/h)	X* (meters)	Y (meters)	Z (meters)
50	115.0	60.0	
60	85.0	90.0	
70	15.0	160.0	
80	15.0		180.0
90	15.0		205.0
100	15.0		225.0
110	15.0		250.0

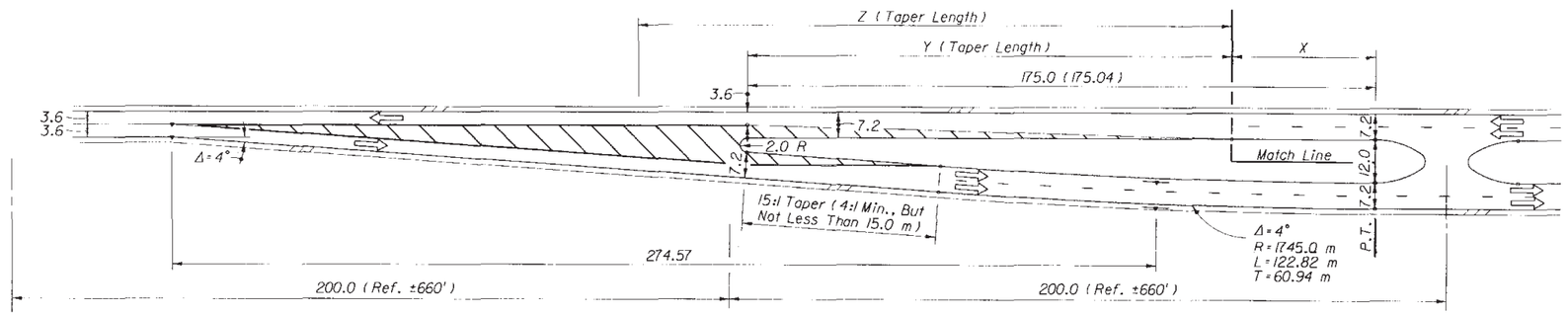

12.0 m MEDIAN

19.0 m Median			
Design Speed (km/h)	X* (meters)	Y (meters)	Z (meters)
50	187.0	60.0	
60	157.0	90.0	
70	87.0	160.0	
80	67.0	180.0	
90	42.0	205.0	
100	22.0	225.0	
110	15.0		250.0

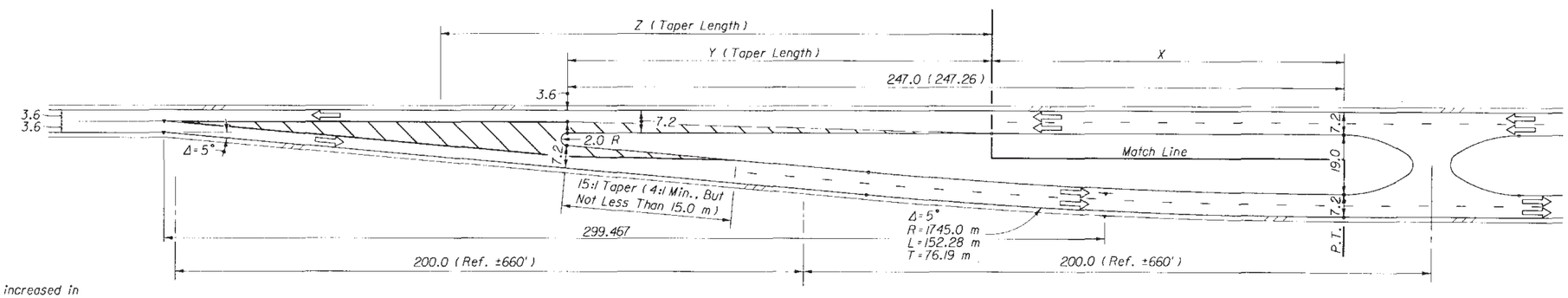

19.0 m MEDIAN

* Dimension 'X' shall not be less than 15.0 m but can be increased in order to make this transitional geometry best fit subsectional features.

NOTES FOR SHEETS 5 THRU 8

1. The transition geometry shown on sheets 5 thru 8 are applicable to tangent alignments and median widths shown. The geometrics of these schemes are associated with the standard subsectional spacing for sideroads, but in any case will require modification to accommodate sideroad location, multilane and/or divided sideroads, oblique sideroads, crossover widths, storage and speed change lane requirements, and, other related features.
   The match lines are cut lines where the transitions may be moved back on approach roadways and ahead on departing roadways to accommodate intermediate access connections, storage lanes and other related features.
2. Approach lane departures ($\Delta = 5°$) are suitable for design speeds up to 100 km/h. Interior curves ($R = 1745.0$) are suitable for normal crown for design speeds up to 80 km/h. Merging curves ($R \leq 350.0$) will require superelevation.

LEFT ROADWAY CENTERED ON APPROACH ROADWAY

TWO LANE TO FOUR LANE TRANSITION

STATE OF FLORIDA DEPARTMENT OF TRANSPORTATION
ROAD DESIGN

ROADWAY TRANSITIONS

	Names	Dates
Designed By	KNM	9/89
Drawn By	HKH	2/94
Checked By	JVG	2/94

Approved By Freddie Simmons
State Roadway Design Engineer

F.H.W.A. Approved:	Revision No.	Sheet No.	Index No.
	94	5 of 8	526

7.0 m Median		
Design Speed (km/h)	Y Rounded (Calc.) (meters)	Q Rounded (Calc.) (meters)
50	113.0 (112.317)	111.0 (110.916)
60	125.0 (124.925)	146.0 (145.75)
70	180.0 (179.644)	177.0 (176.305)
80	196.0 (195.50)	181.0 (180.675)
90	221.0 (220.375)	185.0 (184.957)
100	239.0 (239.0)	188.0 (187.67)
110	263.0 (262.569)	191.0 (190.461)

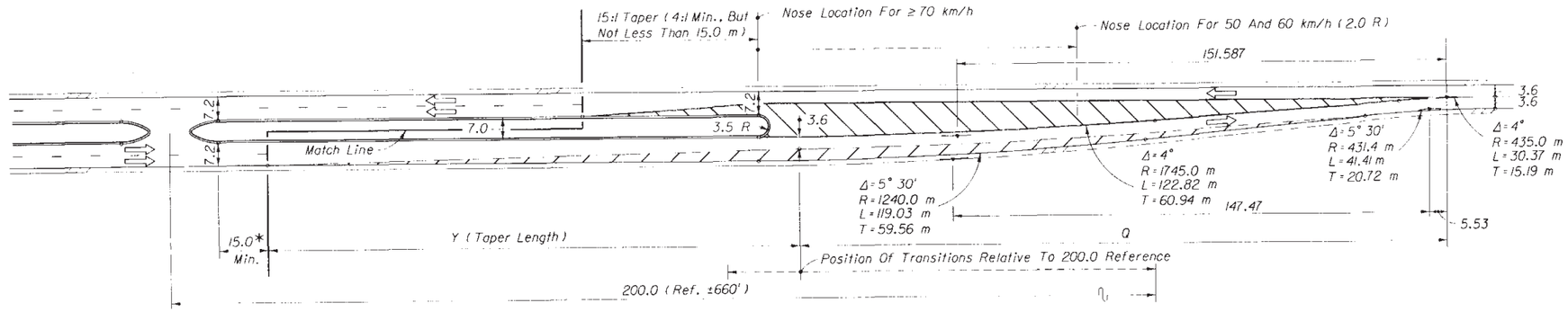

7.0 m MEDIAN

12.0 m Median		
Design Speed (km/h)	Y Rounded (Calc.) (meters)	Q Rounded (Calc.) (meters)
50	113.0 (112.317)	180.0 (179.298)
60	125.0 (124.925)	215.0 (214.137)
70	180.0 (179.644)	245.0 (244.691)
80	196.0 (195.50)	250.0 (249.06)
90	221.0 (220.375)	254.0 (253.323)
100	239.0 (239.0)	257.0 (256.051)
110	263.0 (262.569)	259.0 (258.848)

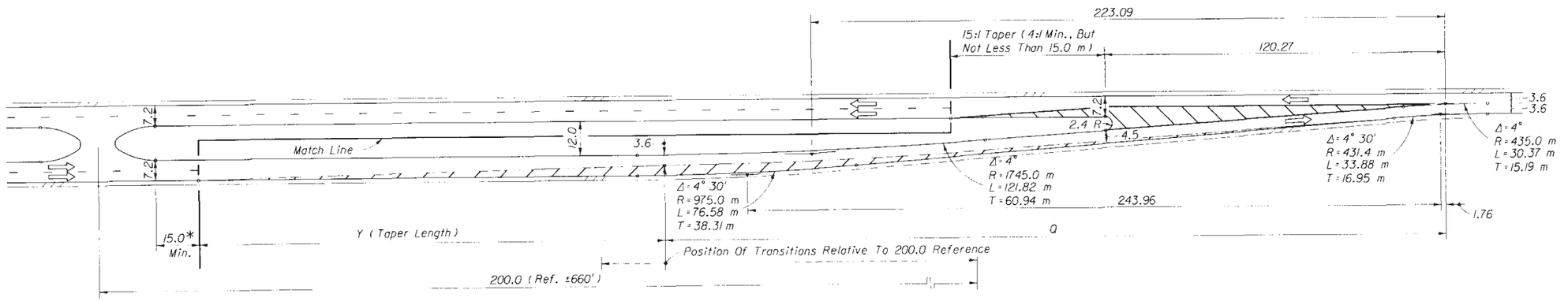

12.0 m MEDIAN

19.0 m Median		
Design Speed (km/h)	Y Rounded (Calc.) (meters)	Q Rounded (Calc.) (meters)
50	113.0 (112.317)	230.0 (229.785)
60	125.0 (124.925)	265.0 (264.624)
70	180.0 (179.644)	296.0 (295.179)
80	198.0 (197.50)	300.0 (299.547)
90	220.0 (219.875)	305.0 (304.310)
100	239.0 (238.5)	308.0 (307.038)
110	263.0 (262.569)	310.0 (309.335)

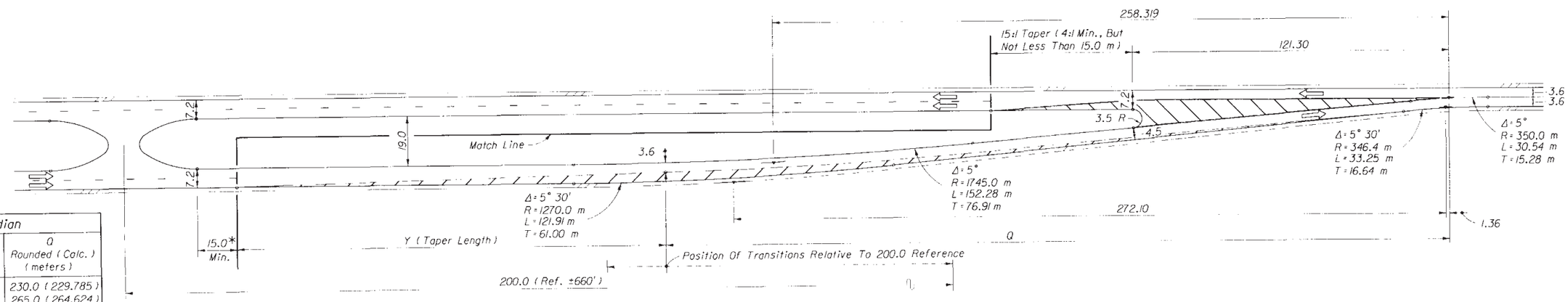

19.0 m MEDIAN

* This value can be increased in order to make this transitional geometry best fit subsectional features, see note 1 on sheet 5.

LEFT ROADWAY CENTERED ON THRU ROADWAY

FOUR LANE TO TWO LANE TRANSITION

STATE OF FLORIDA DEPARTMENT OF TRANSPORTATION
ROAD DESIGN

ROADWAY TRANSITIONS

	Names	Dates
Designed By	KNM	9/89
Drawn By	HKH	2/94
Checked By	JVG	2/94
F.H.W.A. Approved:		

Approved By Freddie Simmons
State Roadway Design Engineer

Revision No.	Sheet No.	Index No.
94	6 of 8	526

7.0 m Median		
Design Speed (km/h)	Y Rounded (Calc.) (meters)	Q Rounded (Calc.) (meters)
50	113.0 (112.317)	111.0 (110.916)
60	125.0 (124.925)	146.0 (145.75)
70	180.0 (179.644)	177.0 (176.305)
80	196.0 (195.50)	181.0 (180.675)
90	221.0 (220.375)	185.0 (184.957)
100	239.0 (239.0)	188.0 (187.67)
110	263.0 (262.569)	191.0 (190.461)

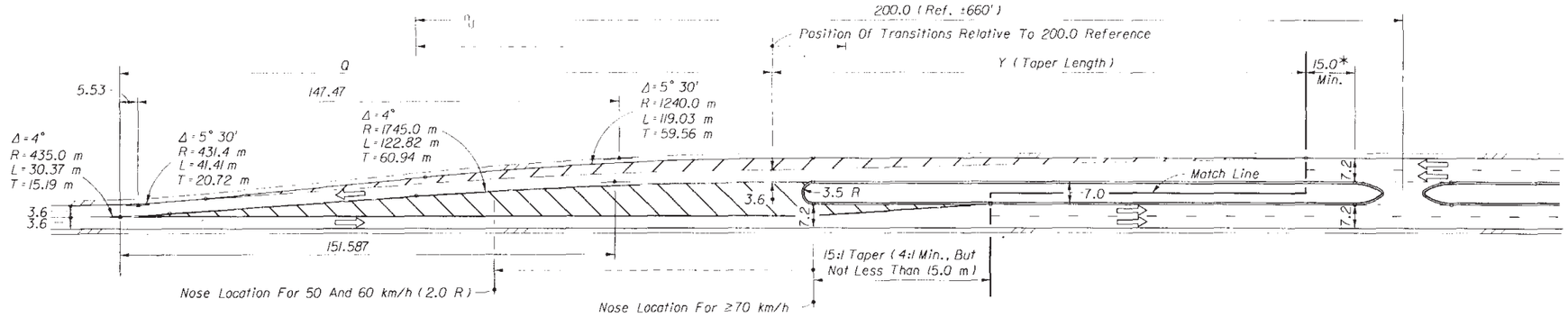

7.0 m MEDIAN

12.0 m Median		
Design Speed (km/h)	Y Rounded (Calc.) (meters)	Q Rounded (Calc.) (meters)
50	113.0 (112.317)	180.0 (179.298)
60	125.0 (124.925)	215.0 (214.137)
70	180.0 (179.644)	245.0 (244.691)
80	196.0 (195.50)	250.0 (249.06)
90	221.0 (220.375)	254.0 (253.323)
100	239.0 (239.0)	257.0 (256.051)
110	263.0 (262.569)	259.0 (258.848)

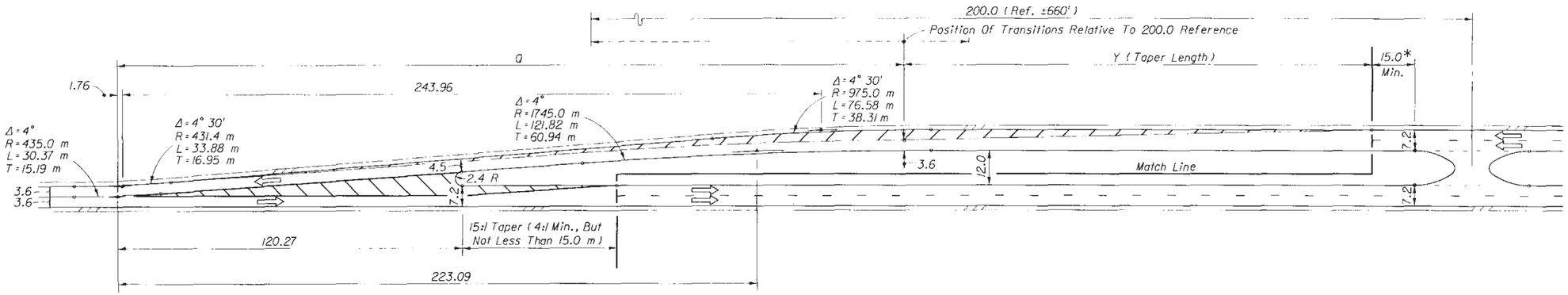

12.0 m MEDIAN

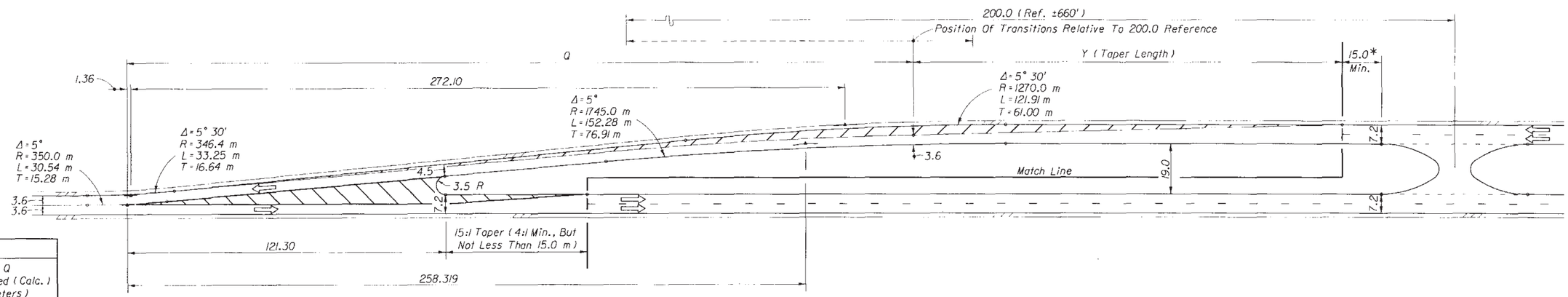

19.0 m MEDIAN

19.0 m Median		
Design Speed (km/h)	Y Rounded (Calc.) (meters)	Q Rounded (Calc.) (meters)
50	113.0 (112.317)	230.0 (229.785)
60	125.0 (124.925)	265.0 (264.624)
70	180.0 (179.644)	296.0 (295.179)
80	198.0 (197.50)	300.0 (299.547)
90	220.0 (219.875)	305.0 (304.310)
100	239.0 (238.5)	308.0 (307.038)
110	263.0 (262.569)	310.0 (309.335)

* This value can be increased in order to make this transitional geometry best fit subsectional features, see note 1 on sheet 5.

RIGHT ROADWAY CENTERED ON APPROACH ROADWAY

TWO LANE TO FOUR LANE TRANSITION

STATE OF FLORIDA DEPARTMENT OF TRANSPORTATION
ROAD DESIGN

ROADWAY TRANSITIONS

	Names	Dates
Designed By	KNM	9/89
Drawn By	HKH	2/94
Checked By	JVC	2/94

Approved By Freddie Simmons
State Roadway Design Engineer

Revision No.	Sheet No.	Index No.
94	7 of 8	526

F.H.W.A. Approved:

7.0 m Median			
Design Speed (km/h)	X* (meters)	Y (meters)	Z (meters)
50	116.0	60.0	
60	86.0	90.0	
70	16.0	160.0	
80	15.0		180.0
90	15.0		205.0
100	15.0		225.0
110	15.0		250.0

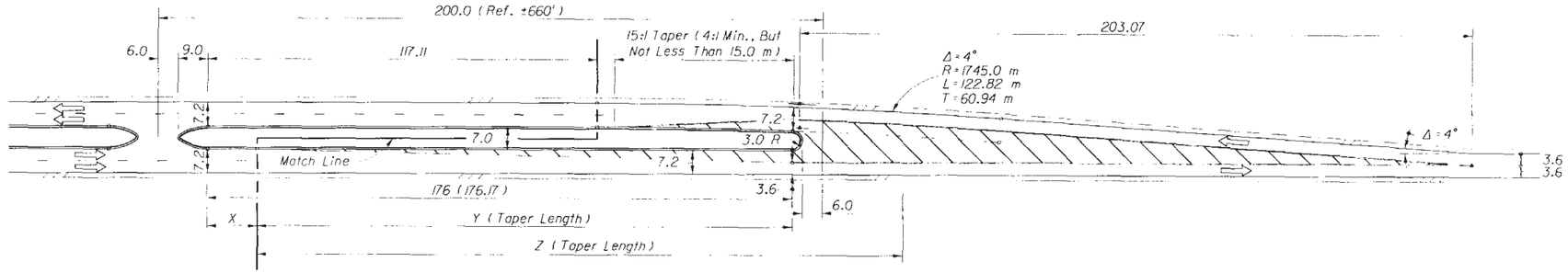

7.0 m MEDIAN

12.0 m Median			
Design Speed (km/h)	X* (meters)	Y (meters)	Z (meters)
50	115.0	60.0	
60	85.0	90.0	
70	15.0	160.0	
80	15.0		180.0
90	15.0		205.0
100	15.0		225.0
110	15.0		250.0

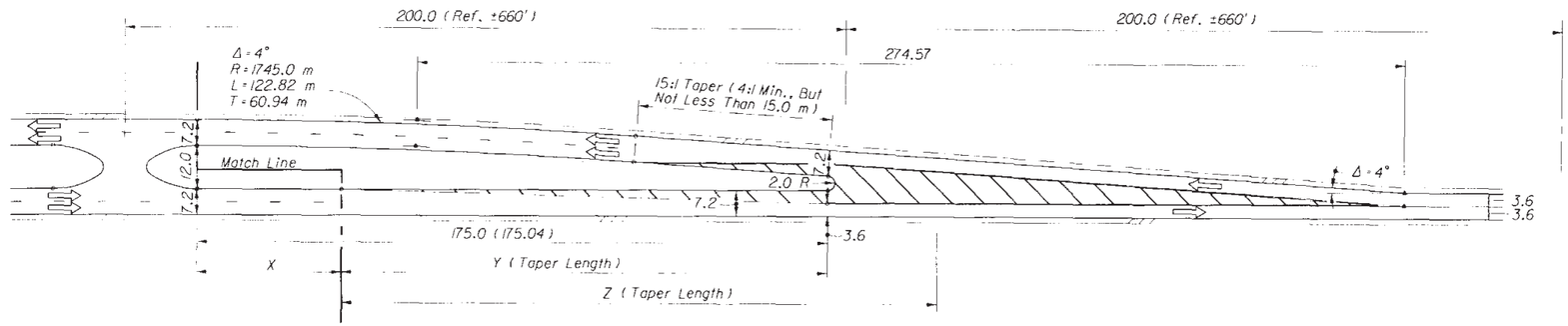

12.0 m MEDIAN

19.0 m Median			
Design Speed (km/h)	X* (meters)	Y (meters)	Z (meters)
50	187.0	60.0	
60	157.0	90.0	
70	87.0	160.0	
80	67.0	180.0	
90	42.0	205.0	
100	22.0	225.0	
110	15.0		250.0

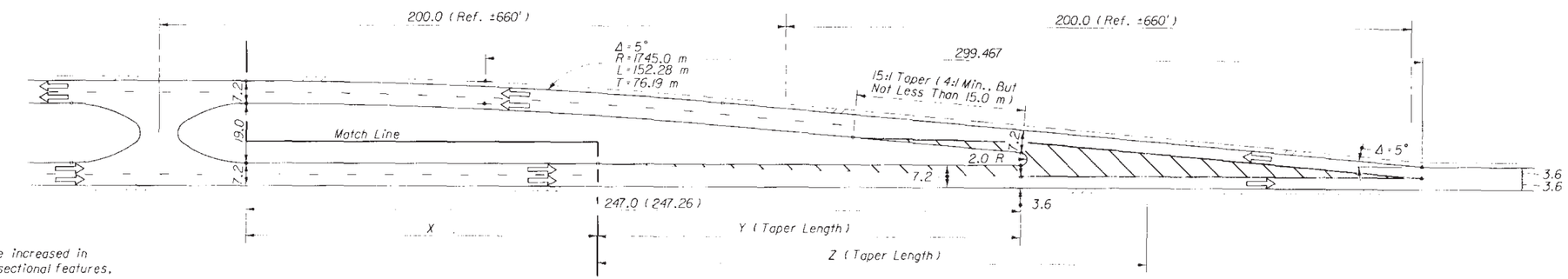

19.0 m MEDIAN

* Dimension 'X' shall not be less than 15.0 m but can be increased in order to make this transitional geometry best fit subsectional features, see note 1 on sheet 5.

RIGHT ROADWAY CENTERED ON THRU ROADWAY

FOUR LANE TO TWO LANE TRANSITION

STATE OF FLORIDA DEPARTMENT OF TRANSPORTATION
ROAD DESIGN

ROADWAY TRANSITIONS

	Names	Dates
Designed By	KNM	9/89
Drawn By	HKH	2/94
Checked By	JVG	2/94
F.H.W.A. Approved:		

Approved By Freddie Simmons
State Roadway Design Engineer

Revision No.	Sheet No.	Index No.
94	8 of 8	526

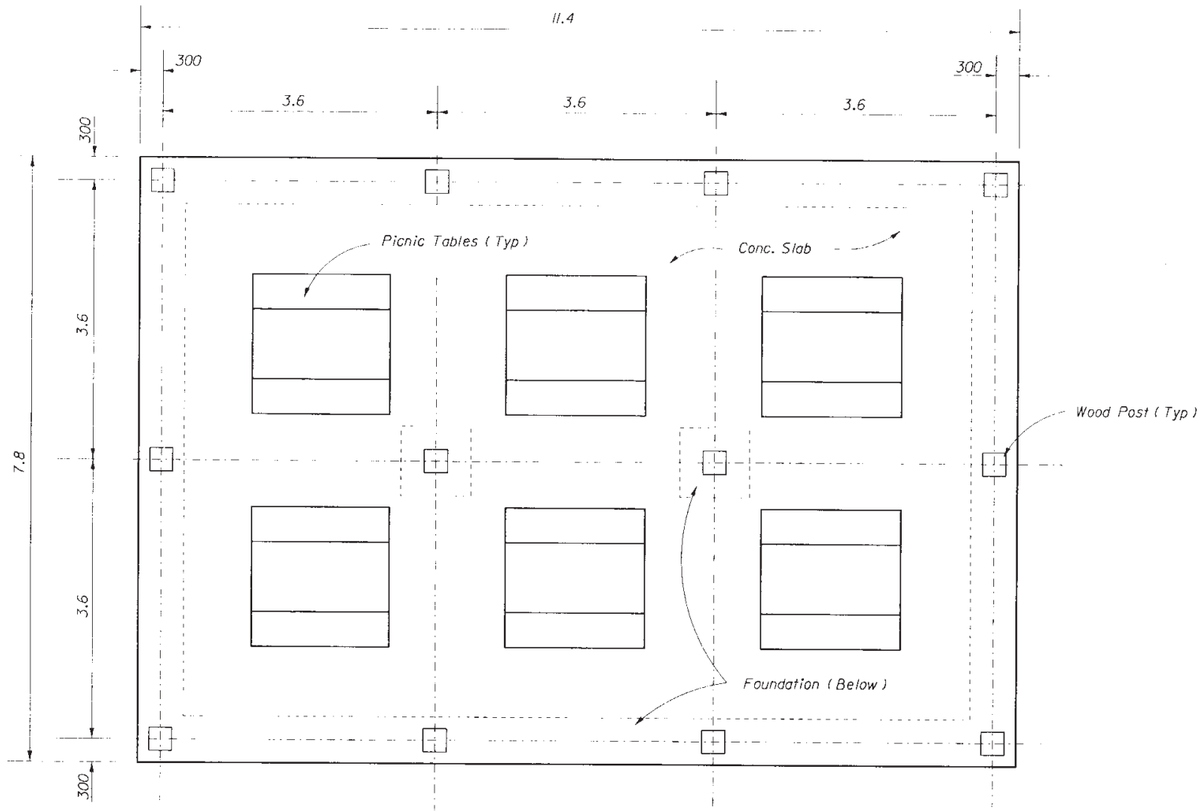

A / 1 FLOOR PLAN

LARGE PAVILION

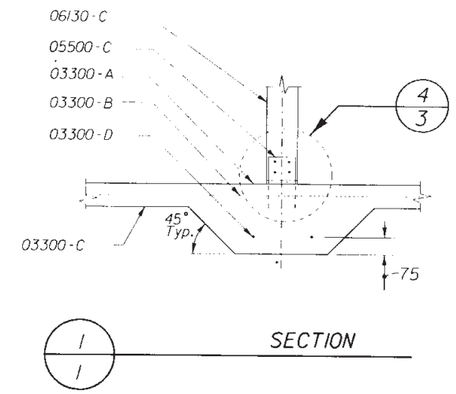

SECTION

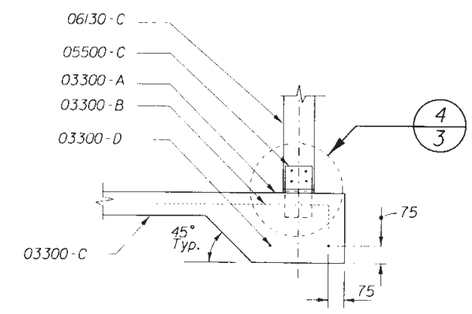

2 / 1 SECTION

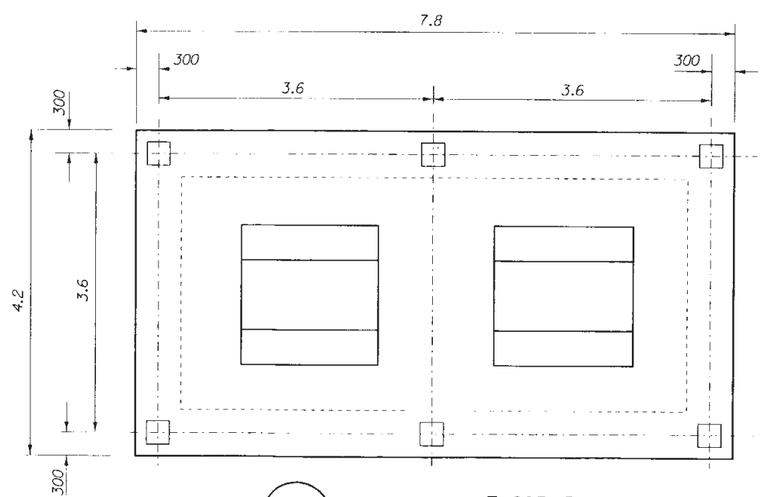

B / 1 FLOOR PLAN

SMALL PAVILION

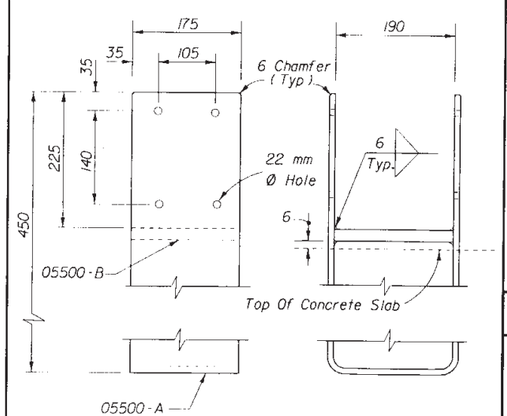

POST BASE

3 / 1 DETAIL

NOTES

Keynotes On Sheet 2.

FLOOR

150 mm Reinf. Concrete Slab w/WWF6 x 6-W1.4 x W1.4

450 mm x 450 mm Drop Footing At Slab Perimeter & Interior Posts.

Harden & Broom Finish Slab Surface.

STRUCTURE

Posts: 200 mm x 200 mm PT

Beams: 100 mm x 150 mm PT

Framing: 100 mm x 100 mm PT As Described.

Misc Members: 50 mm x 100 mm As Described.

ROOF

75 mm T&G Wood Decking.

Type II Asphalt-Saturated Organic Felt (1270 g/m^2) (Commonly Called No. 30)

Standing Seam Metal Roof (24 GA Steel Or 1 mm Alum.) w/ Kynar 500 Finish.

Structure, Decking And Roofing Shall Withstand 210 km/h Wind Load.

BUILDING CODE

Picnic Pavilions Shall Be Constructed According To The Requirements Of The Appropriate Sections Of Applicable "Standard Building Code" or "South Florida Building Code", Current, Adopted Edition.

PICNIC PAVILIONS

STATE OF FLORIDA DEPARTMENT OF TRANSPORTATION
ROAD DESIGN

REST AREA EQUIPMENT

	Names	Dates
Designed By	HDP	6/30/93
Drawn By	HDP	6/30/93
Checked By	DRL	6/30/93

Approved By D. Rowland Lamb
Administrator Of Special Facilities

F.H.W.A. Approved:	Revision No.	Sheet No.	Index No.
	94	1 of 3	530

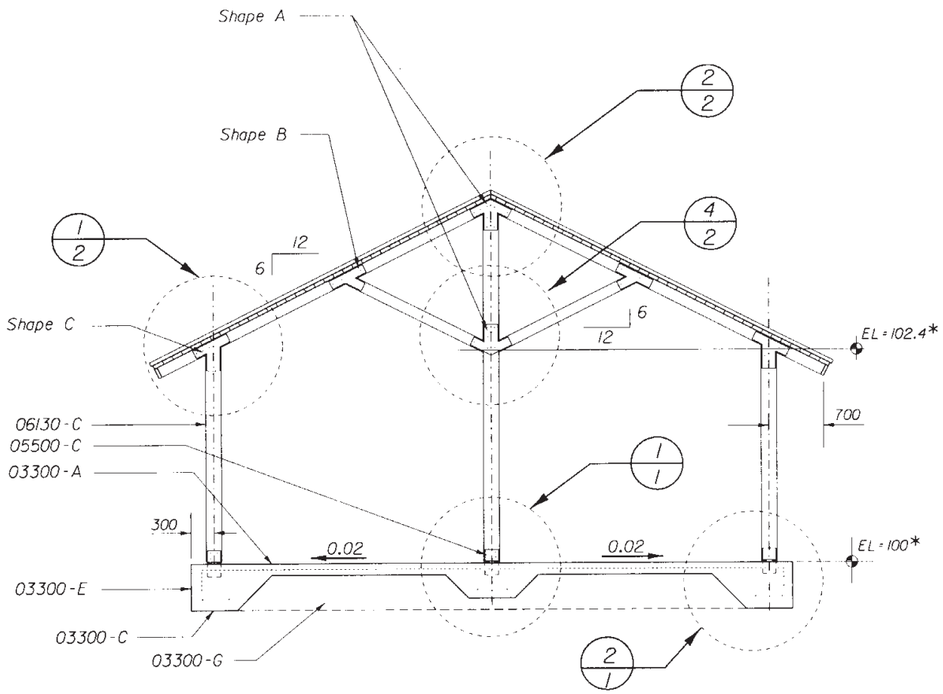

* REFERENCE ELEVATION ONLY

A/2 SECTION

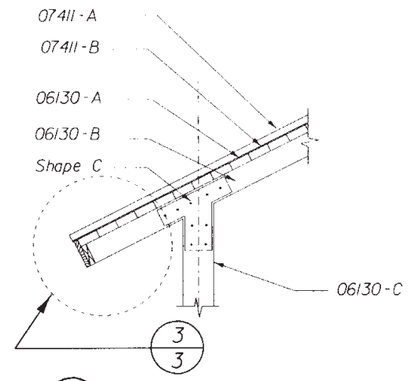

1/2 SECTION

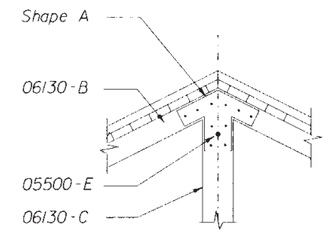

2/2 SECTION

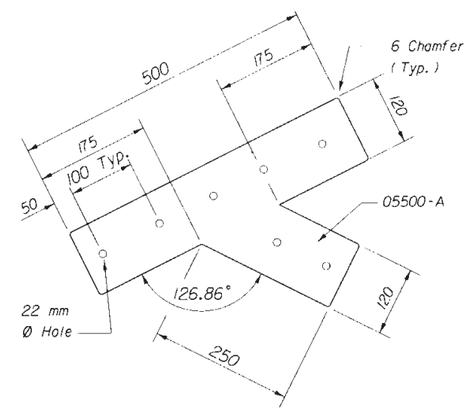

SHAPE B DETAIL

3/2

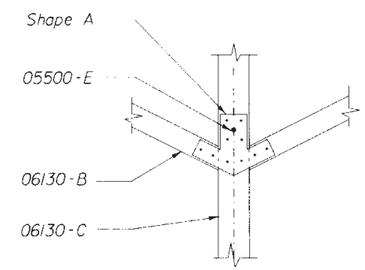

4/2 SECTION

KEYNOTES

03300-A	Class II Conc Slab
03300-B	150 mm x 150 mm-W1.4 x W1.4 @ ℄ Of Slab
03300-C	6 Mil Vapor Barrier
03300-D	15M Rebar Cont. (2 Required)
03300-E	600 mm x 600 mm Drop Footing
03300-F	450 mm x 450 mm Drop Footing
03300-G	150 mm Min Comp Sand Fill
05500-A	10 mm Galv. Steel Plate
05500-B	14 mm Galv. Steel Plate
05500-C	Post Base
05500-D	14 mm Ø Bolt, Washer & Nut (Typ)
05500-E	16 mm Ø Eyebolt, Washer & Nut For Cross Brace Bars
05500-F	14 mm Ø Steel Rod w/Turnbuckle
06130-A	75 mm x 150 mm T&G Wood Decking
06130-B	100 mm x 150 mm PT Wood Frame
06130-C	200 mm x 200 mm PT Wood Post
06130-D	50 mm x 150 mm PT Wood Fascia
06130-E	25 mm x 250 mm PT Wood Fascia
07411-A	Standing Seam Metal Roof
07411-B	Type II Asphalt-Saturated Organic Felt (1270 g/m²) (Commonly Called No. 30)

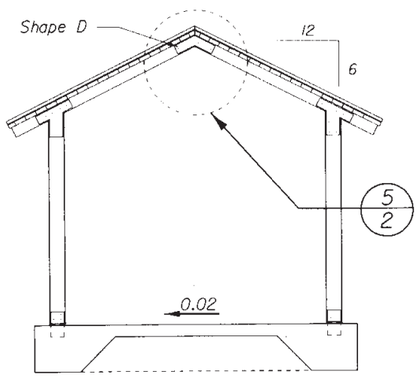

NOTE: DETAILS TO MATCH THOSE OF LARGE PICNIC PAVILION

B/2 SECTION

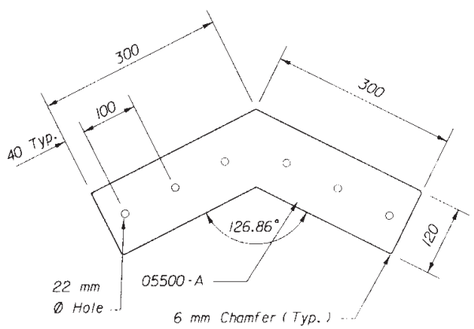

SHAPE D DETAIL

5/2

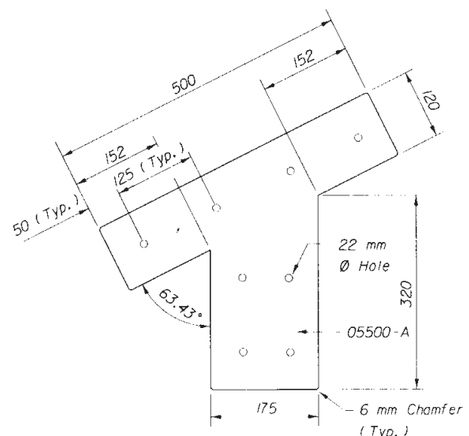

SHAPE C DETAIL

6/2

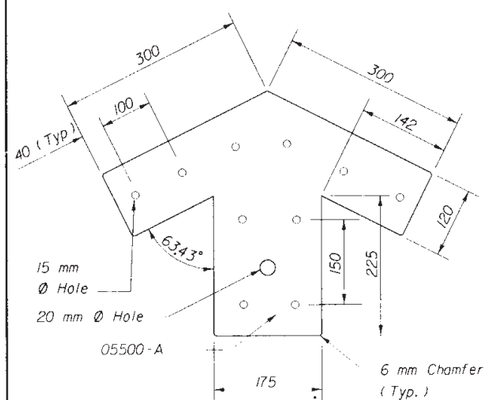

SHAPE A DETAIL

7/2

PICNIC PAVILIONS

STATE OF FLORIDA DEPARTMENT OF TRANSPORTATION
ROAD DESIGN

REST AREA EQUIPMENT

	Names	Dates
Designed By	HDP	6/30/93
Drawn By	HDP	6/30/93
Checked By	DRL	6/30/93

Approved By — Administrator Of Special Facilities

Revision No.	Sheet No.	Index No.
94	2 of 3	530

F.H.W.A. Approved:

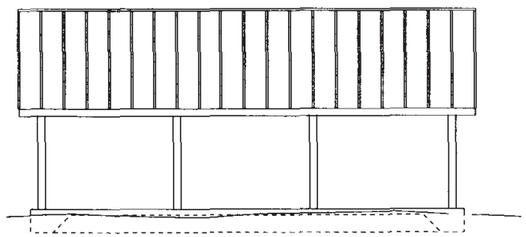

A/3 SIDE ELEVATION

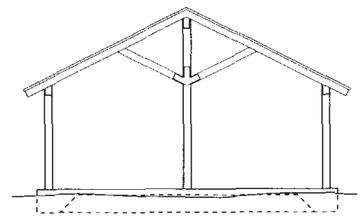

B/3 END ELEVATION

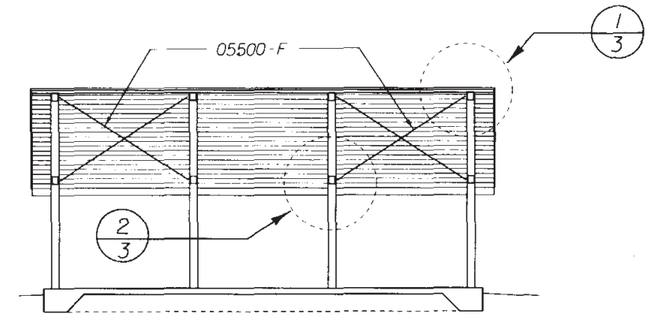

C/3 SECTION

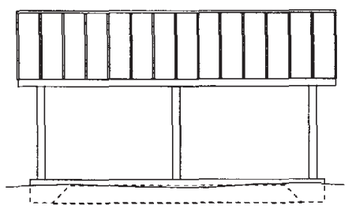

D/3 SIDE ELEVATION

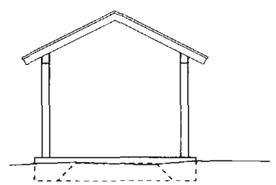

E/3 END ELEVATION

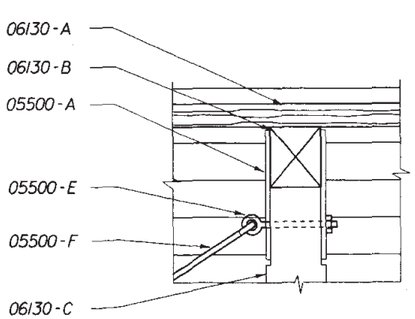

1/3 DETAIL

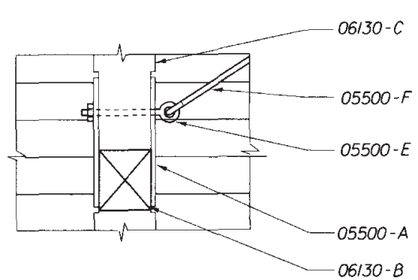

2/3 DETAIL

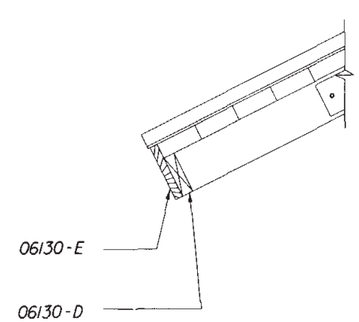

3/3 DETAIL

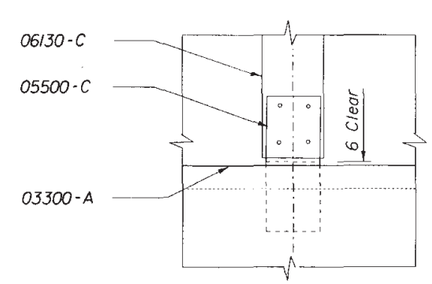

4/3 DETAIL

SPECIFICATIONS

Keynotes On Sheet 2.

CONCRETE

Concrete: FDOT Class II.

Reinforcing Bars: ASTM A615/A615M, Grade 400.

Welded Wire Fabric: ASTM A-185.

Vapor Barrier: Black 6-Mil Polyethylene.

STEEL

Galvanized Steel Plates: ASTM A446/A446M With Z275 Coating

Galvanized Fasteners: High-Strength Bolts And Nuts, ASTM A325M With Zinc Coating, ASTM A153.

Galvanized Shapes After Fabrication, Make Field Repairs To Galvanizing With High Zinc Dust Content Paint, Complying With SSPC-Paint-20.

WOOD

Comply With American Institute For Timber Construction AITC 108, "Standard For Heavy Timber Construction."

For Solid Wood Decking, Comply With AITC 112, Standard For Tongue And Groove Heavy Timber Standard."

Species: Douglas Fir, Hem-fir, Or Southern Pine, At Fabricators Option.

Preservative Treatment: Pressure Treat Fabricated Members With Waterborne Solution For Above Ground Use, Complying With AWPA C2.

Wood Decking: Predrill Decking At 750 mm Centers For Lateral Spiking To Adjacent Units.

PICNIC TABLES

Picnic Tables And Benches Shall Be 1.8 m x 1.8 m w/Heavy Galvanized Pipe Frames And Recycled Plastic Wood Seats And Table Tops. All Tables Shall Be Of Walk Thru Design Suitable For Exterior Locations And Shall Be Accessibile According To The Requirements Of The Americans With Disabilities Act (ADA) Accessibility Guidelines For Tables And Benches Shall Be Selected From DOT's Qualified Products Lists.

PICNIC PAVILIONS

STATE OF FLORIDA DEPARTMENT OF TRANSPORTATION
ROAD DESIGN

REST AREA EQUIPMENT

	Names	Dates
Designed By	HDP	6/30/93
Drawn By	HDP	6/30/93
Checked By	DRL	6/30/93

Approved By
Administrator Of Special Facilities

Revision No.	Sheet No.	Index No.
94	3 of 3	530

F.H.W.A. Approved:

GENERAL NOTES

1. The location and construction of mailboxes shall conform to the rules and regulations of the United States Postal Service as modified by this design standard.

2. Mailboxes will not be permitted on Interstate highways, freeways, or other highways where prohibited by law or regulation.

3. The contractor shall give the Postmaster of the delivery route(s) written notice of project construction 7 days prior to the beginning of work, with Saturdays, Sundays and Holidays excluded.

   The Contractor shall furnish and install one mailbox in accordance with this design standard at each mail patron delivery location and maintain the box throughout the contract period. The Contractor shall apply box numbers to each patron box in accordance with identification specifications of the Domestics Mail Manual of the U. S. Postal Service; where local street names and house numbers are authorized by the Postmaster as a postal address, the Contractor shall inscribe the house number on the box; if the box is located on a different street from the patrons residence, the Contractor shall inscribe the street name and house number on the box.

   The Contractor shall coordinate removal of the patrons existing mailboxes. Immediately after installing the new mailboxes the Contractor must notify each "Mail Delivery Patron" by Certified Mail that removal of the existing mailboxes must be accomplished in 21 days after receipt of notices. Patrons shall have the option of removing their existing mailboxes or leaving the mailboxes in place for removal by the Contractor; removal by the Contractor shall be included in the contract unit price for Mailbox, Each. The Contractor shall dispose of mailboxes and supports in areas provided by him.

   Reuse of existing mailboxes by the Contractor will not be a requirement under any construction project; however where an existing mailbox meets the design requirements of this standard and is structurally and functionally sound, the Contractor at his option may elect to reuse the existing mailbox in lieu of constructing a new mailbox. Any use of existing mailboxes must be approved by the Engineer.

4. Mailboxes shall be metal construction only, in traditional style only, and only in Size 1 as prescribed by the Domestic Mail Manual of the U. S. Postal Service (DMM).

   Mailbox production standards, lists of approved manufacturers and suppliers of mailboxes, design approval and guidance may be obtained by writing to the Rural Delivery Division, Delivery Service Department, Operations Group, USPS Headquarters, Washington, DC 20260.

5. Mailboxes shall be located on the right-hand side of the roadway in the direction of the delivery route, except on one-way roads and streets where they may be placed on the left-hand side.

   Mailboxes on rural highways shall be set with the roadside face of the box offset from the edge of the traveled way a minimum distance of the greater of the following:

   (a) Shoulder width plus 200 to 300 mm.
   (b) 3.0 m for ADT over 10,000 vpd.
   2.4m for ADT 100 to 10,000 vpd.
   1.8 m for ADT under 100 vpd.
   0.8 m for low speed and ADT under 100 vpd.

   When a mailbox is installed within the limits of guardrail it should be placed behind the guardrail whenever practical.

   Mailboxes on curbed highways, roads and streets shall be set with the face of the box between 150 mm and 300 mm back of the face of curb. If the sidewalk abuts the curb or if an unusual condition exists which makes it difficult or impractical to install or serve boxes at the curb, the Contractor with concurrence of the local postal authority may be permitted to install all mailboxes at the back edge of the sidewalk, where they can be served by the carrier from the sidewalk.

6. Mailboxes shall be set with the bottom of the box between 1.0 m and 1.2 m above the mail stop surface, unless the U.S. Postal Service establishes other height restrictions.

7. No more than two mailboxes may be mounted on a support structure unless the support structure and mailbox arrangements have been shown to be safe by crash testing and approved by the State Design Engineer, Roadways.

   Neighborhood Delivery and Collection Box Units (NDCBU) are a specialized multiple mailbox installation that must be located outside the highway and street clear zones. The location of NDCBUs is the sole responsibility of the Postmaster for the delivery route under consideration.

8. Lightweight newspaper receptacles may be mounted below the mailbox on the side of the support post in conformance with the USPS Domestic Mail Manual. The mail patron shall be responsible for newspaper receptacle installation and maintenance.

9. Wood and steel support posts for both single and double mailbox mountings shall be embedded no more than 600 mm into the ground.

   Concrete, block, brick, stone or other rigid foundation structure or encasement, either above or below the shoulder groundline, will not be permitted for mailboxes on rural highways. On urban roads and streets where mailbox support posts are set within rigid pavement back of curb, the support posts shall be separated from the pavement by a minimum of 25 mm of expansion material.

   Support posts shall not be fitted nor installed with surface mount base plates.

10. At driveway entrances mailboxes shall be placed on the far side of the driveway in the direction of the delivery route.

    At intersecting roads mailboxes shall be located 30.0 m or more from the centerline of the intersecting road on the far side in the direction of the delivery route, with the distance increased to 60.0 m when the route volume exceeds 400 vehicles per day.

11. Wood support posts shall be in conformance with the material and dimensional requirements of Section 952 and the treatment requirements of Section 955 of the Standard Specifications.

    Steel support posts shall have an external finish equal to or better than two coats of weather resistant, air dried or baked, paint or enamel. Surfaces(s) shall be cleaned of all loose scale prior to finishing. The Postal Service prefers that posts be painted white, but other colors may be used when approved by the Engineer. When galvanized posts are used painting is not required.

    Mounting brackets, plates, platforms, shelfs and accessory hardware surface finishes are to be suited to support post finish.

12. Mailboxes shall be paid for under the contract unit price for Mailboxes, Each. Payment shall be full compensation for boxes, posts and accessory items essential for installation in accordance with this standard; erection; adjustments to suit construction needs; and, for identification letters and numbers.

    Payment shall be limited to one mailbox per patron address whether the mailbox is new, reused, salvaged, reset or relocated. Payment shall be per mailbox regardless of the number of mailboxes per support or grouping arrangement.

    The above compensation shall include any work and cost incurred by the contractor for removal and disposal of existing mailboxes.

    There shall be no payment participation for NDCBU furnishing, assembly, installation, resetting or relocation.

STATE OF FLORIDA DEPARTMENT OF TRANSPORTATION
ROAD DESIGN

MAILBOXES

	Names	Dates
Designed By		
Drawn By	HSD	7/87
Checked By	JVC/JBW	7/87

Approved By Freddie Simmons
State Roadway Design Engineer

Revision No.	Sheet No.	Index No.
94	1 of 3	532

F.H.W.A. Approved:

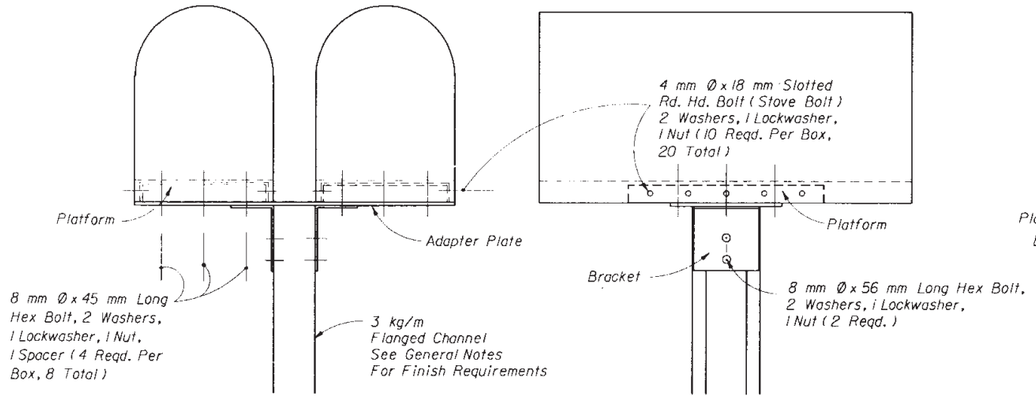

FRONT VIEW

SIDE VIEW

FLANGED CHANNEL

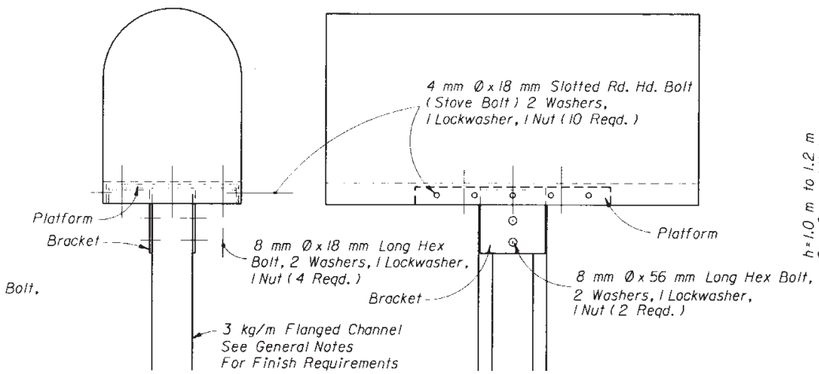

FRONT VIEW

SIDE VIEW

FLANGED CHANNEL

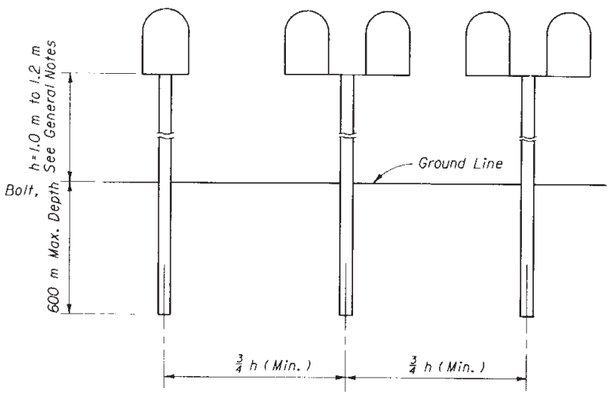

ELEVATION

SINGLE OR COMBINED WOOD, FLANGED CHANNEL OR PIPE POST TYPES SHOWN ON THIS INDEX

POST SPACING

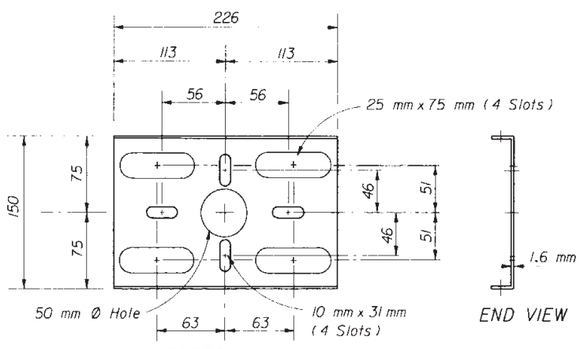

BOTTOM VIEW

END VIEW

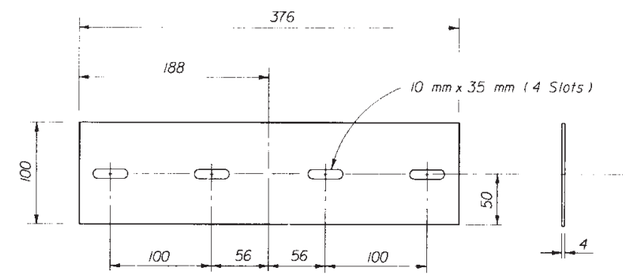

TOP VIEW

END VIEW

STEEL ADAPTER PLATE

Note: See General Notes for finish requirements.

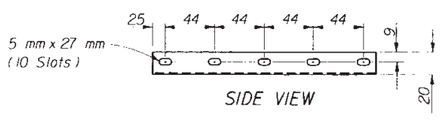

SIDE VIEW

STEEL PLATFORM

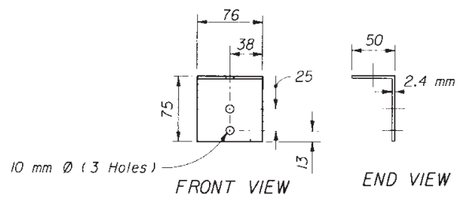

FRONT VIEW

END VIEW

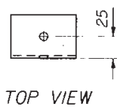

TOP VIEW

STEEL BRACKET

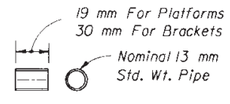

STEEL SPACER

STEEL FLANGED CHANNEL SUPPORT POSTS

STATE OF FLORIDA DEPARTMENT OF TRANSPORTATION
ROAD DESIGN

MAILBOXES

	Names	Dates
Designed By		
Drawn By	HSD	7/87
Checked By	JVG/JBW	7/87
F.H.W.A. Approved:		

Approved By Freddie Simmons
State Roadway Design Engineer

Revision No.	Sheet No.	Index No.
94	2 of 3	532

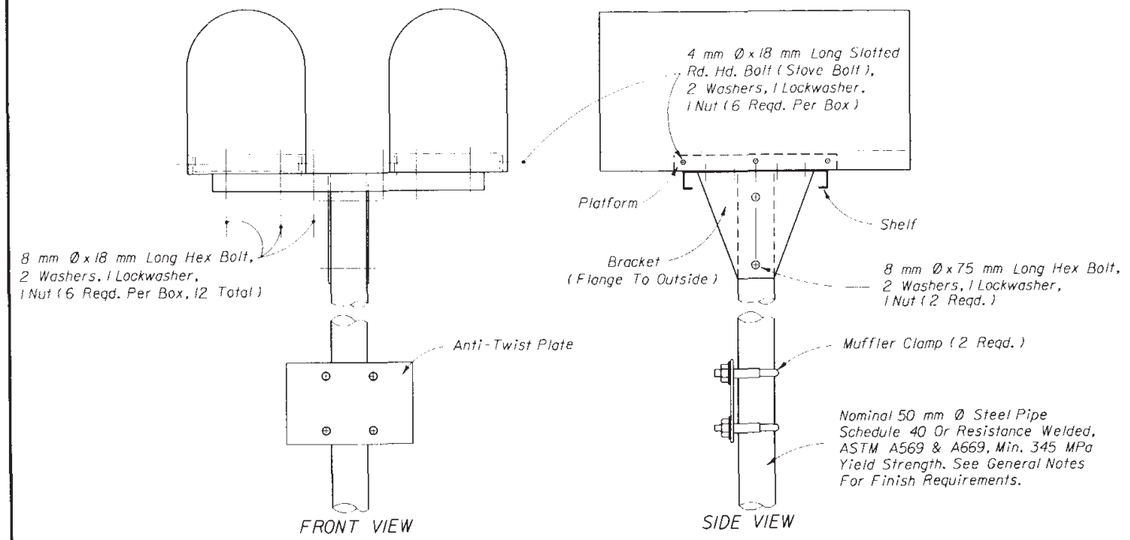

50 mm PIPE POST

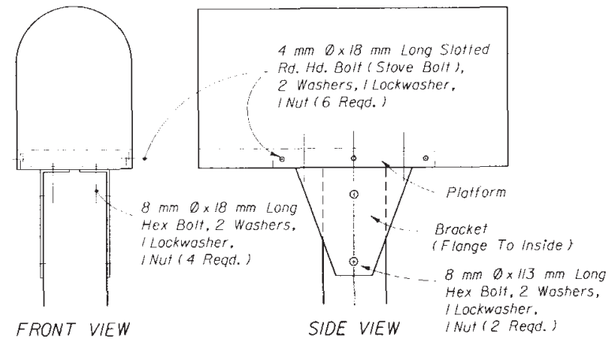

100 mm x 100 mm WOOD POST

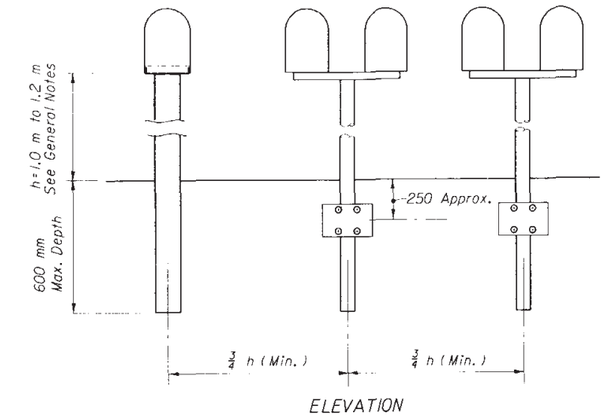

SINGLE OR COMBINED WOOD, FLANGED CHANNEL OR PIPE POST TYPES SHOWN ON THIS INDEX

POST SPACING

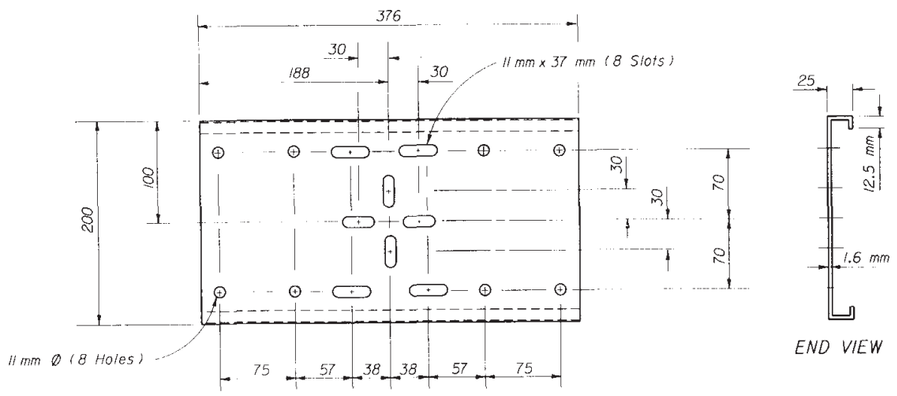

STEEL SHELF

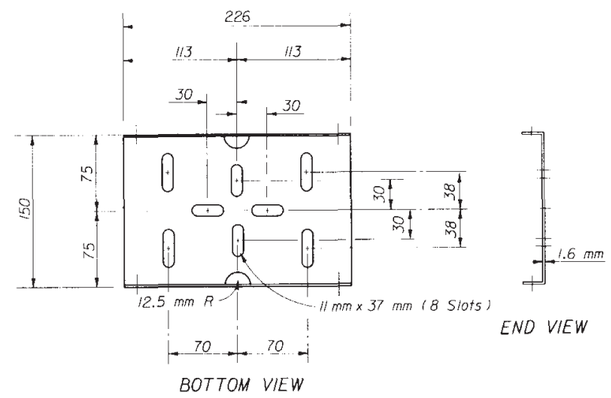

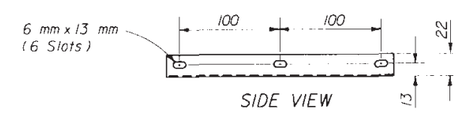

STEEL PLATFORM

Note: See General Notes for finish requirements

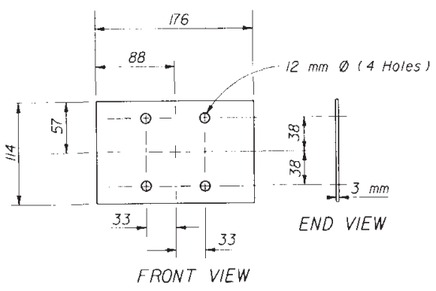

STEEL ANTI-TWIST PLATE

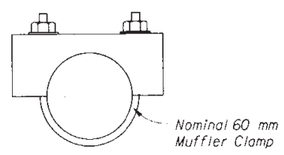

STEEL CLAMP

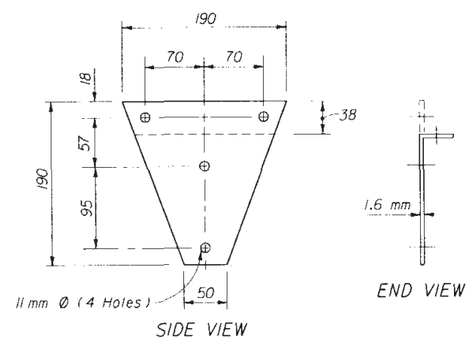

STEEL BRACKET

STEEL PIPE AND WOOD SUPPORT POSTS

STATE OF FLORIDA DEPARTMENT OF TRANSPORTATION
ROAD DESIGN

MAILBOXES

	Names	Dates
Designed By		
Drawn By	HSD	7/87
Checked By	JVG/JBW	7/87
F.H.W.A. Approved:		

Approved By Freddie Simmons
State Roadway Design Engineer

Revision No.	Sheet No.	Index No.
94	3 of 3	532

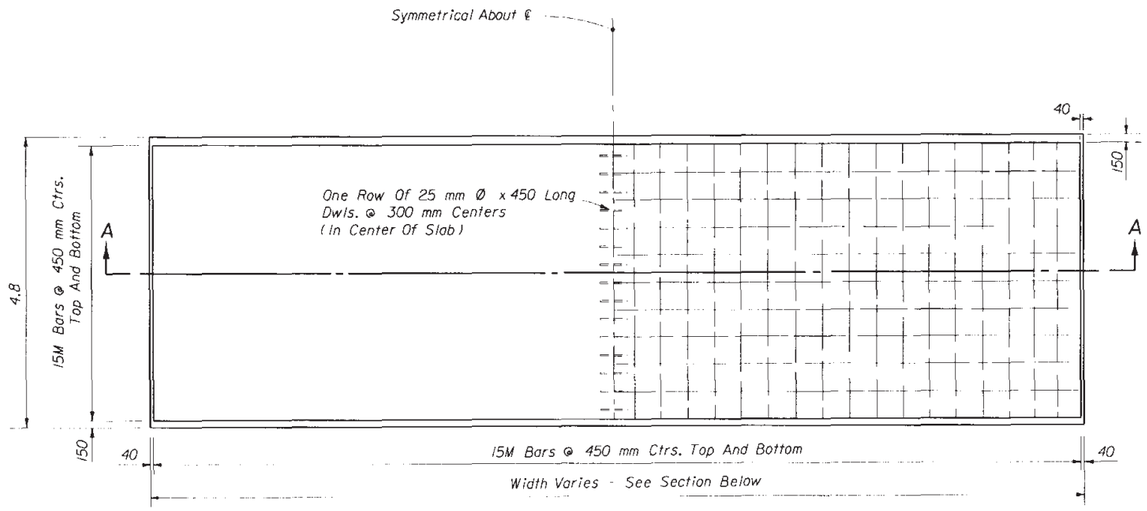

PLAN

Note: Class I concrete is to be used unless otherwise noted in plans or special provisions.

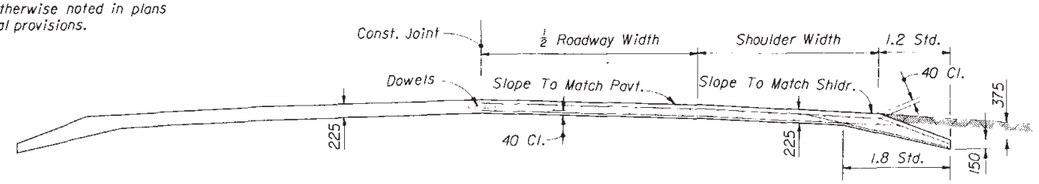

SECTION AA

REINFORCED CONCRETE

TYPE A

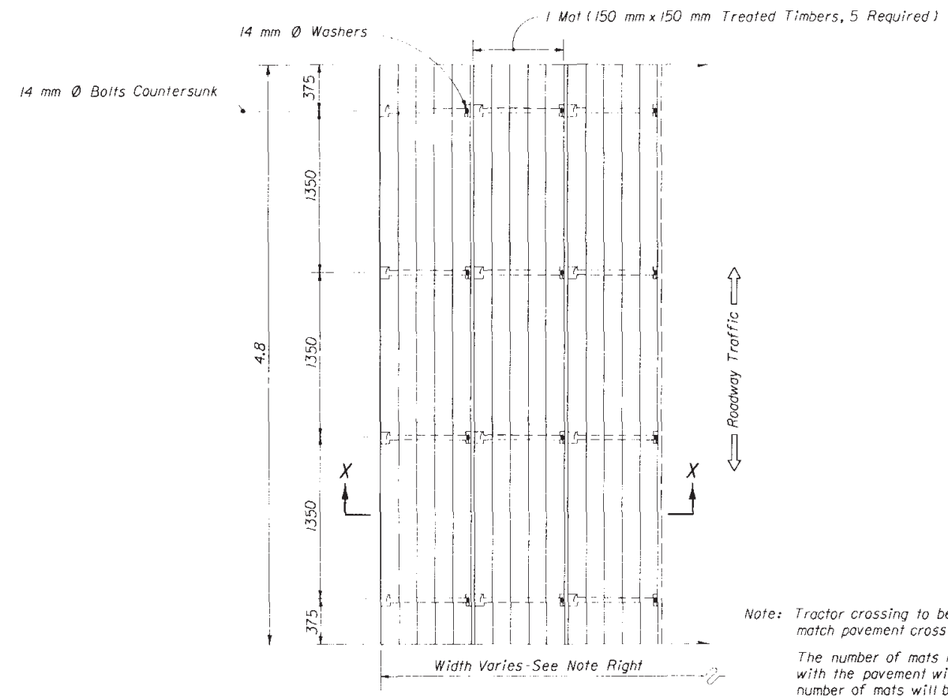

PLAN

Note: Tractor crossing to be constructed to match pavement cross slope.

The number of mats required will vary with the pavement width. A sufficient number of mats will be used so that the overall width of the tractor crossing will be centered on the centerline.

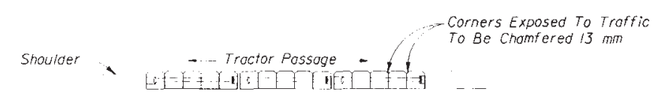

SECTION XX

TREATED TIMBER

TYPE B

STATE OF FLORIDA DEPARTMENT OF TRANSPORTATION
ROAD DESIGN

TRACTOR CROSSINGS

	Names	Dates
Designed By		
Drawn By	LH	01/61
Checked By	CDD	01/61
F.H.W.A. Approved:		03/20/75

Approved By Freddie Simmons
State Roadway Design Engineer

Revision No.	Sheet No.	Index No.
94	1 of 1	535

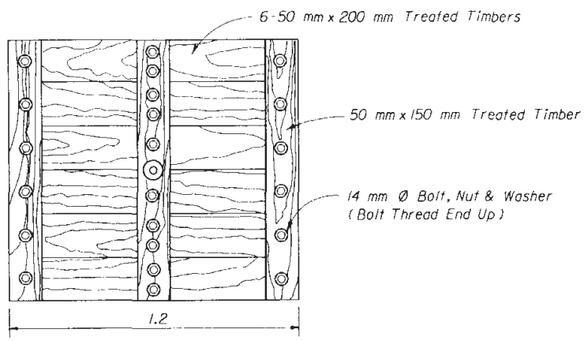

PLAN
TIMBER PLATE

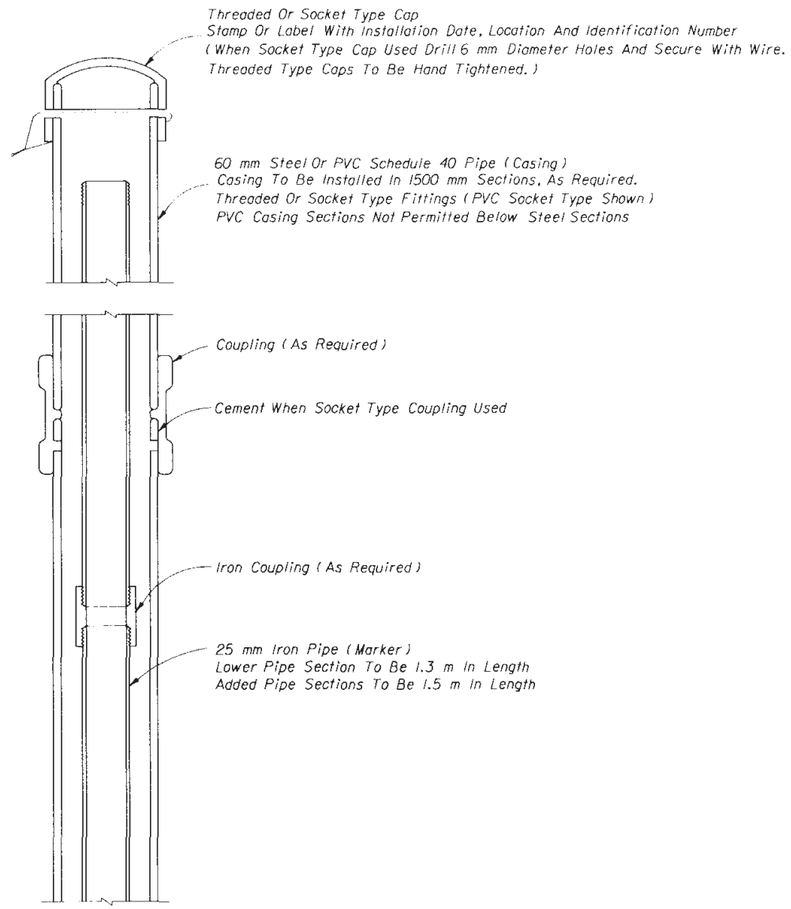

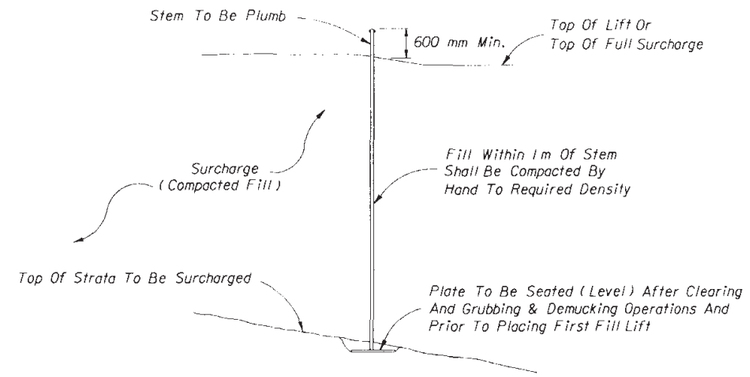

INSTALLATION

GENERAL NOTES

1. Elevation of the top of each length of marker pipe shall be determined as soon as it is installed and also immediately before the next length of marker pipe is added.
2. Settlement plate locations shall be flagged and protected from construction vehicles and equipment. If settlement plates are disturbed, they shall be replaced in kind.
3. Oakum used to construct seal should not have a mesh covering (plastic or other synthetic material).
4. The settlement plates shall be paid for under the contract unit price for Settlement Plate Assembly, AS.

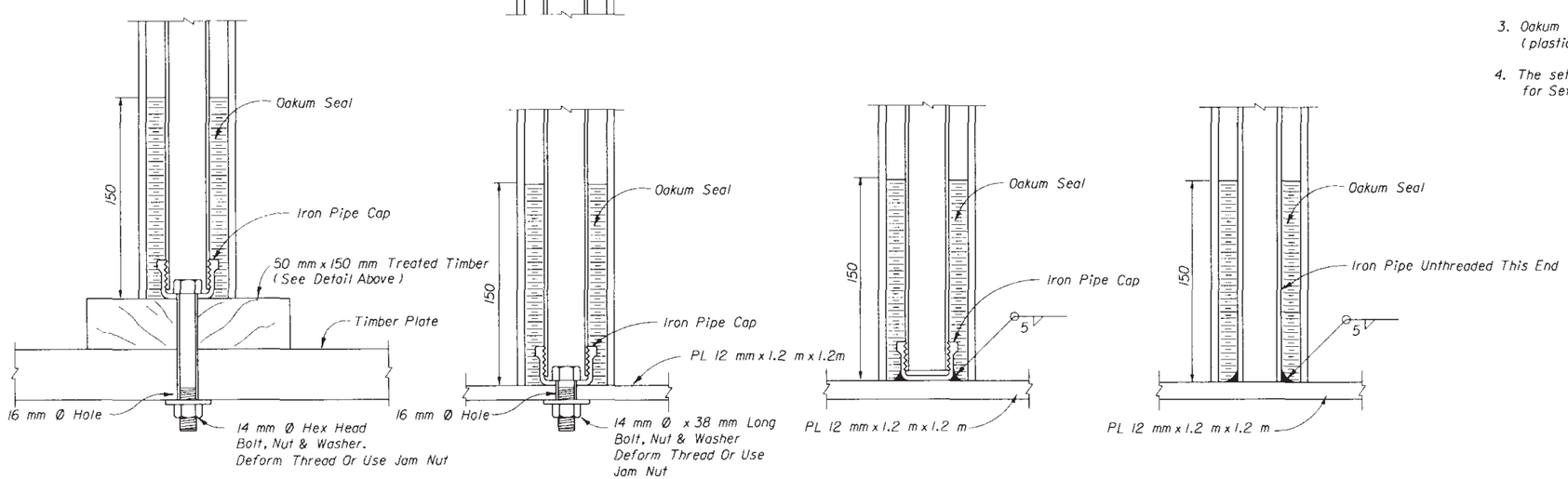

TIMBER PLATE | STEEL PLATE | STEEL PLATE | STEEL PLATE

STEM AND PLATE OPTIONS

STATE OF FLORIDA DEPARTMENT OF TRANSPORTATION
ROAD DESIGN

SETTLEMENT PLATE

	Names	Dates
Designed By	JVG	10/79
Drawn By	HSD	10/79
Checked By	JBW	10/79
F.H.W.A. Approved:		10/07/80

Approved By Freddie Simmons
State Roadway Design Engineer

Revision No.	Sheet No.	Index No.
94	1 of 1	540

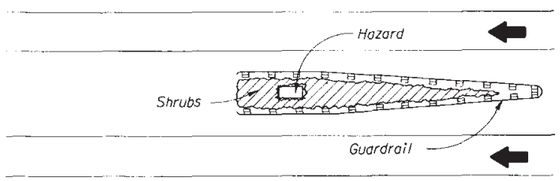

MEDIAN HAZARD - ONE WAY TRAFFIC

DETAIL A

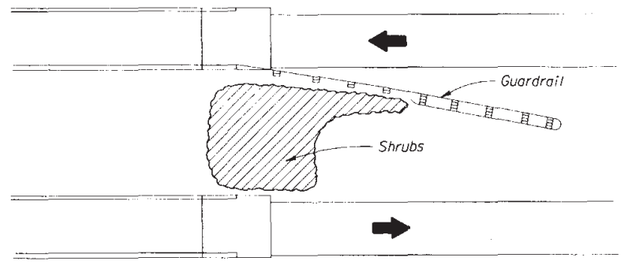

BRIDGE END - WIDE MEDIAN

DETAIL C

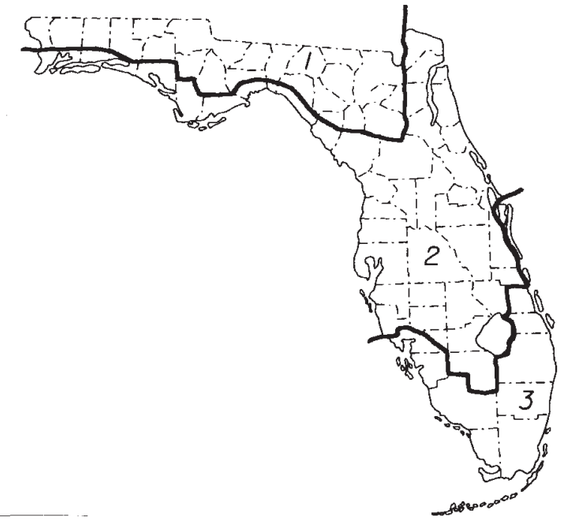

ZONE MAP

ZONE	SHRUB
1.	Wax Myrtle Pampas Grass Primrose Jasmine Russian Olive
2.	Wax Myrtle Pampas Grass Primrose Jasmine Russian Olive Jasmine Simplic Oleander
3.	Pampas Grass Russian Olive Natal Plum Jasmine Simplic Oleander Dwarf Oleander

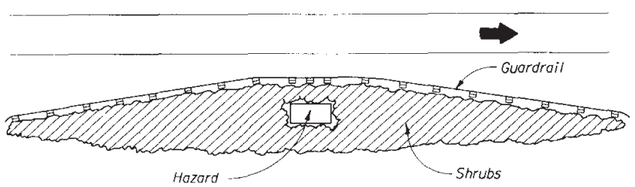

ROADSIDE HAZARD

DETAIL B

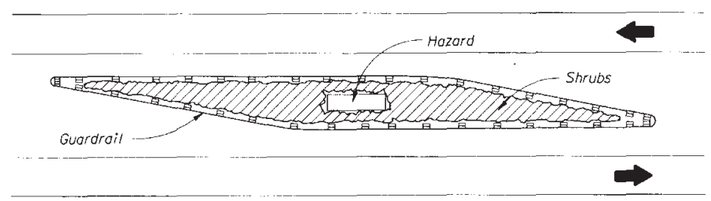

MEDIAN HAZARD - TWO WAY TRAFFIC

DETAIL D

GENERAL NOTES

1. The purpose of shrubs in areas back of guardrail is to eliminate hand maintenance in those areas.
2. Shrubs are to be planted approximately 1.5 m back from guardrail posts and hazards. Narrow plant areas are to have at least one row of shrubs, as directed by the Engineer.
3. Shrubs are to be planted approximately 1.5 m on centers in rows with 1.5 m spacings.
4. Shrubs are to be offset in successive rows to create a zig-zag pattern between any two rows.
5. Shrubs shall be specified in the plans by Landscape Material Master Pay Item List numbers.
6. Only one variety of shrub shall be planted within any given contiguous area and no shrub variety is to be repeated within a distance of 1.6 km.
7. When guardrail paving is constructed in conjunction with shrub planting, soil sterilization shall be in accordance with Section 339 of the Standard Specifications.
8. For line of clear sight limits see Index No. 546.

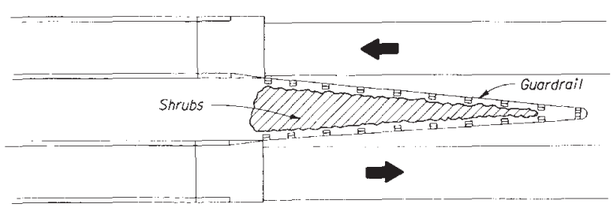

BRIDGE END - NARROW MEDIAN

DETAIL E

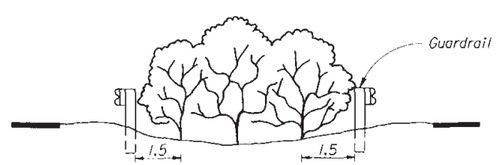

BACK TO BACK GUARDRAIL

SECTIONAL VIEW

STATE OF FLORIDA DEPARTMENT OF TRANSPORTATION
ROAD DESIGN

LANDSCAPING
BACK OF GUARDRAIL APPLICATION

	Names	Dates
Designed By	GLH	
Drawn By		
Checked By		
F.H.W.A. Approved:		

Approved By Freddie Simmons
State Roadway Design Engineer

Revision No.	Sheet No.	Index No.
94	1 of 1	545

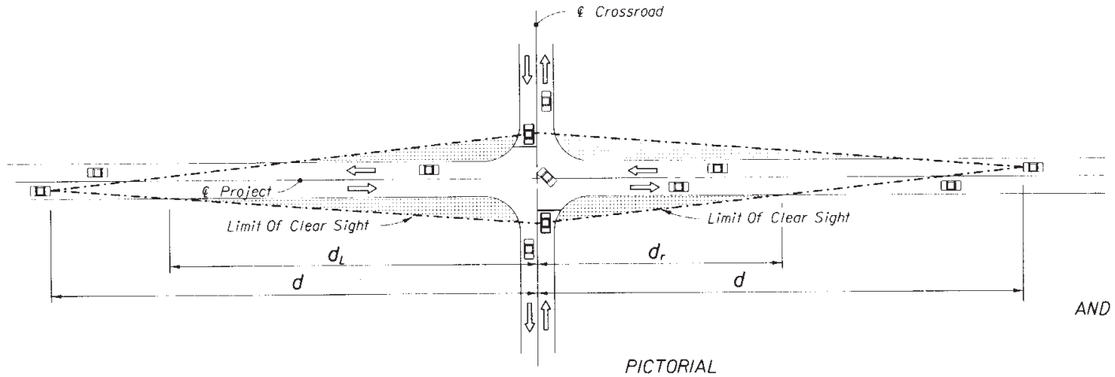

PICTORIAL

2 LANE UNDIVIDED

km/h	d	d_L	d_r
	Meters		
50	120	95	65
60	160	125	85
70	205	160	110
80	255	195	135
90	310	240	165
100	375	290	200
See General Note 2			

SIGHT DISTANCE (d)

AND RELATED DISTANCES (d_L , d_r)

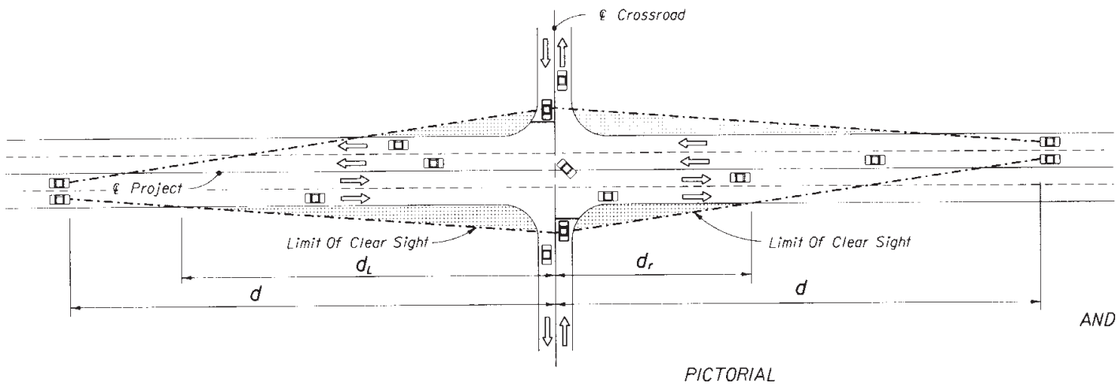

PICTORIAL

MULTILANE UNDIVIDED

km/h	d	d_L	d_r
	Meters		
50	120	95	50
60	160	125	65
70	205	160	85
80	255	195	105
90	310	240	125
100	375	290	150
See General Note 2			

SIGHT DISTANCE (d)

AND RELATED DISTANCES (d_L , d_r)

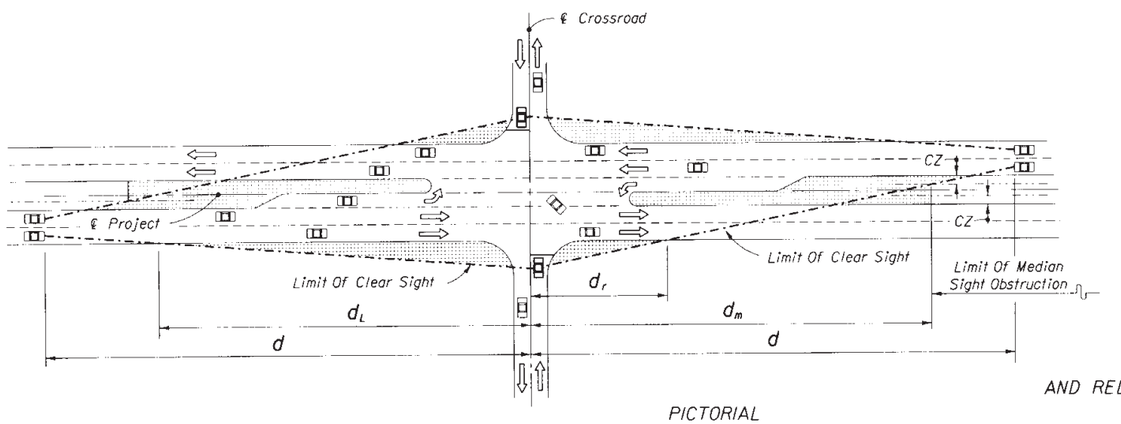

PICTORIAL

MULTILANE DIVIDED

km/h	d	d_L	d_r	d_m
	Meters			
50	120	95	40	100
60	160	125	50	135
70	205	160	65	170
80	255	195	80	210
90	310	240	95	255
100	375	290	115	310
See General Note 2				

SIGHT DISTANCE (d)

AND RELATED DISTANCES (d_L , d_r , d_m)

LEGEND

Areas Free Of Sight Obstructions

NOTE: See Sheet 2 of 2 for intersecting roadway origin of clear sight and quadrant corner clips.

GENERAL NOTES

1. Details apply to both rural and urban intersections under stop sign control and flashing beacon control. For full signal controlled intersections see Design Note No. 3 below.
2. Sight distance (d) applies to normal and skewed intersections (intersecting angles between 60° and 120°), and where vertical and/or horizontal curves are present. Sight distance (d) is measured along the major roadway from the center of the intersecting roadway. Distances d_L and d_r are measured from the centerline of the intersecting roadway to a point on the edge of the outer traffic lane on the major roadway. Distance d_m is measured from the centerline of the intersecting roadway to a point on the median clear zone limit for the far side roadway of the major roadway.
3. a. The limits of clear sight define a corridor throughout which a clear sight window must be preserved. See WINDOW DETAIL, Sheet 2 Of 2.

   b. Clear sight must be provided between vehicles at intersection stop locations, and vehicles on the major roadway within dimension 'd'.

   c. Since observations are made in both directions along the line of sight, the reference datum between roadways is 1070 mm above respective pavements.
4. The corridor defined by the limits of clear sight is a restricted planting area. Drivers of vehicles on the intersecting roadway and vehicles on the major roadway must be able to see each other clearly throughout the limits of 'd'. Plants within the restricted areas are limited to selections as follows:

   Ground Cover & Trunked Plants (Separate or Combined):

   Ground Covers - Plant selection of low growing vegetation which at maturity does not attain a height greater than 470 mm below the sight line datum.

   Trunked Plants - Plant selection of a mature trunk diameter 100 mm or less measured at 150 mm above the ground. Canopy or high borne foliage shall never be lower than 1500 mm above the sight line datum. These selections shall be spaced no closer than 6.0 m.

   Trees:

   Trees with lawn; pavers; pavement; gravel, bark or wood chip beds or other Department approved flush surfaces. Tree size and spacing shall conform to the following tabular values:

Description	Speed (km/h)					
	50	60	70	80	90	100
Maximum Caliper (Within Limits Of Sight Window) (mm)	290	290	290	290	425☆	425☆
Minimum Spacing (c. to c. Of Trunk (m)	7.0	10.0	12.0	15.0	17.0☆	20.0☆

Sizes and spacings are based on the following conditions:

(a) A single line of trees in the median parallel to but not necessarily colinear with the centerline.

(b) A straight approaching mainline, within skew limits as described in No. 2 above.

(c) For the mainline driver at distance 'd', a view of the entering vehicle at its stop bar location, shadowed by a vertical band 1.8 meters wide (max. shadow). For any other conditions the tree sizes, spacings and locations shall be detailed in the plans; see Design Note No. 4.

☆ Depressed medians with guardrail shielding.

5. If, in the Engineers judgement landscaping interferes with the line of sight corridor prescribed by these standards the Engineer may rearrange, relocate or eliminate plantings.
6. Plants shall never obscure signs or signals.

DESIGN NOTES

1. The information shown on this index is intended solely for the purpose of clear sight development and maintenance at intersecting highways, roads and streets, and is not intended to be used to establish geometric design, speed control, signing, marking, lighting or signalization, or to establish roadway and roadside safety except as related to clear sight corridors. An analysis of sight distance shall be performed and documented for all intersections.
2. Details are based on the AASHTO 'A Policy On Geometric Design Of Highways And Streets', Chapter IX, Cases III and IV, and Department practices for channelized median openings (left turns from major roadways).
3. For SIGNALIZED INTERSECTIONS: Due to a variety of standard operational characteristics associated with signal controlled intersections, the sight distances based on Case III procedures should be available to the driver. Unanticipated vehicle conflicts at signalized intersections, such as violation of the signal right turns on red, malfunction of the signal, or use of the flashing red/yellow mode further substantiate the need for incorporation of Case III sight distances. If the proper sight distances can not be attained, other design features such as "no right-on-red" may be necessary. These decisions shall be included in the analysis. The planting restrictions listed under General Notes above shall also apply to signalized intersections.
4. Where curvature, superelevation, adverse split profiles or other conditions preclude the use of standard tree sizses and spacings, proof of view and shadowing restraints must be documented and the size and location of trees in medians detailed in the plans.

STATE OF FLORIDA DEPARTMENT OF TRANSPORTATION
ROAD DESIGN

SIGHT DISTANCE AT INTERSECTIONS

	Names	Dates
Designed By	KNM/JVG	10/89
Drawn By	HSD	10/89
Checked By	JVG/KNM	10/89

Approved By Freddie Simmons
State Roadway Design Engineer

Revision No.	Sheet No.	Index No.
94	1 of 2	546

F.H.W.A. Approved: 6/11/91

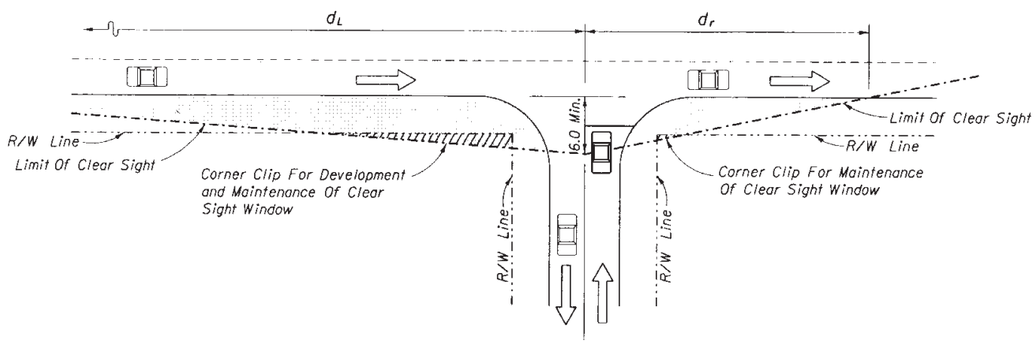

PICTORIAL

ORIGIN OF CLEAR SIGHT LINE AND PROPERTY CORNER CLIPS

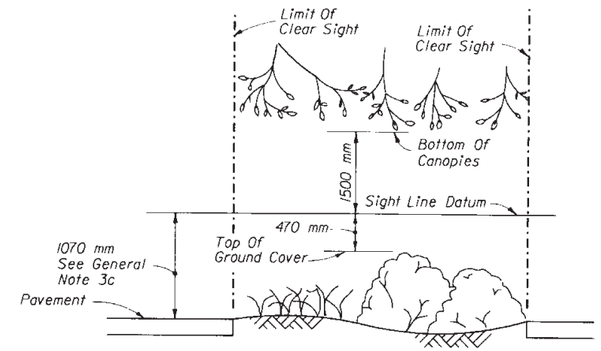

The Intent Of This Standard Is To Provide A Window With Vertical Limits Of Not Less Than 1500 mm Above And 470 mm Below The Sight Line Datum, And Horizontal Limits Defined By The Limits Of Clear Sight.

PICTORIAL

WINDOW DETAIL

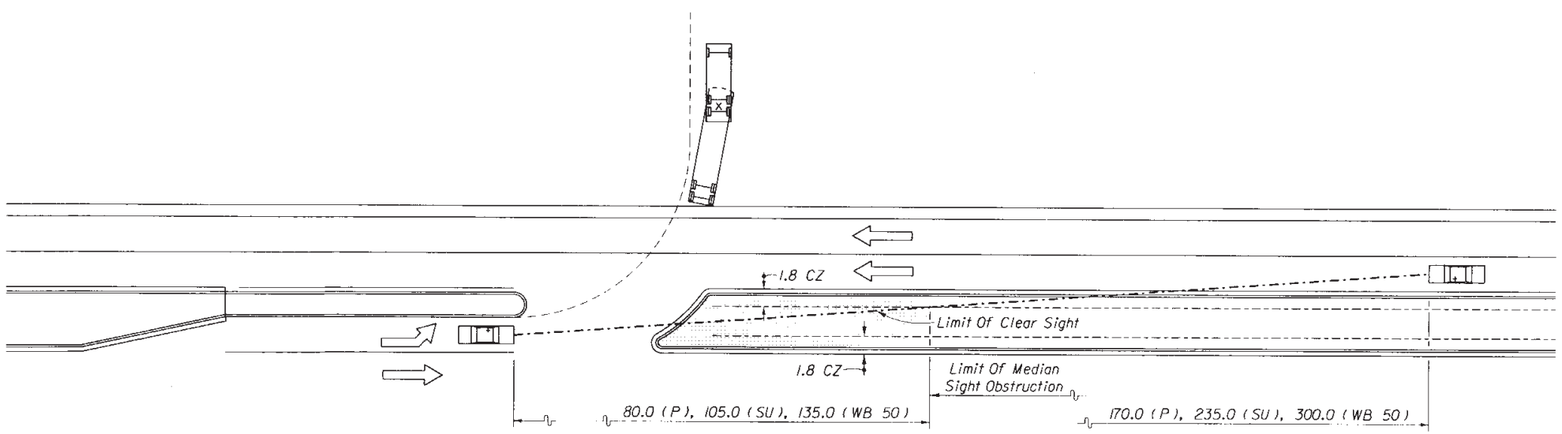

PICTORIAL

CHANNELIZED DIRECTIONAL MEDIAN OPENINGS

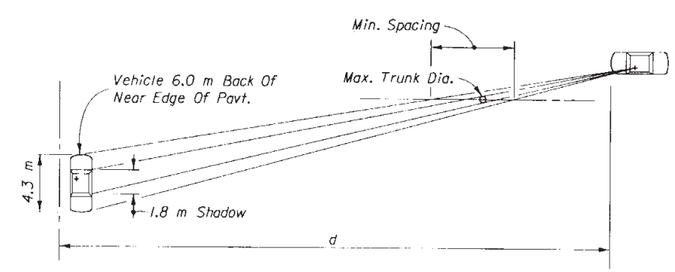

SHADOW DIAGRAM

LEGEND

Areas Free Of Sight Obstructions

STATE OF FLORIDA DEPARTMENT OF TRANSPORTATION
ROAD DESIGN

SIGHT DISTANCE AT INTERSECTIONS

	Names	Dates
Designed By	KNM/JVG	10/89
Drawn By	HSD	10/89
Checked By	JVG/KNM	10/89

Approved By Freddie Simmons
State Roadway Design Engineer

F.H.W.A. Approved:

Revision No.	Sheet No.	Index No.
94	2 of 2	546

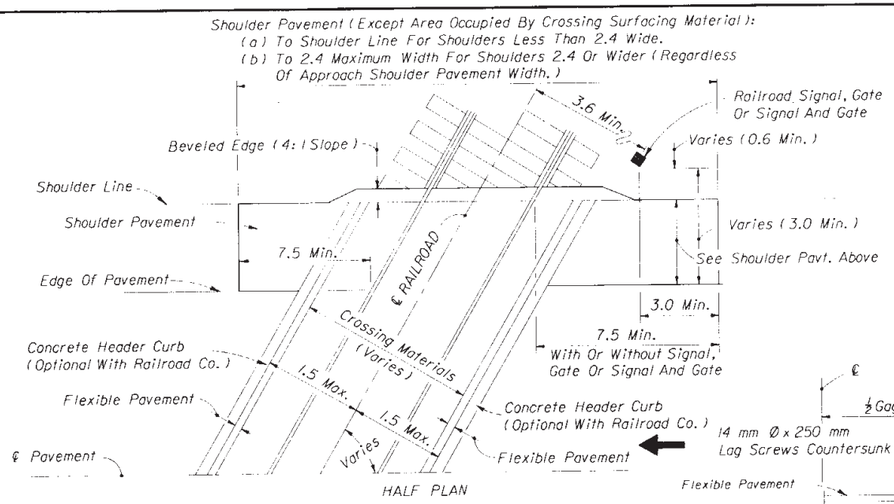

HALF PLAN

RURAL

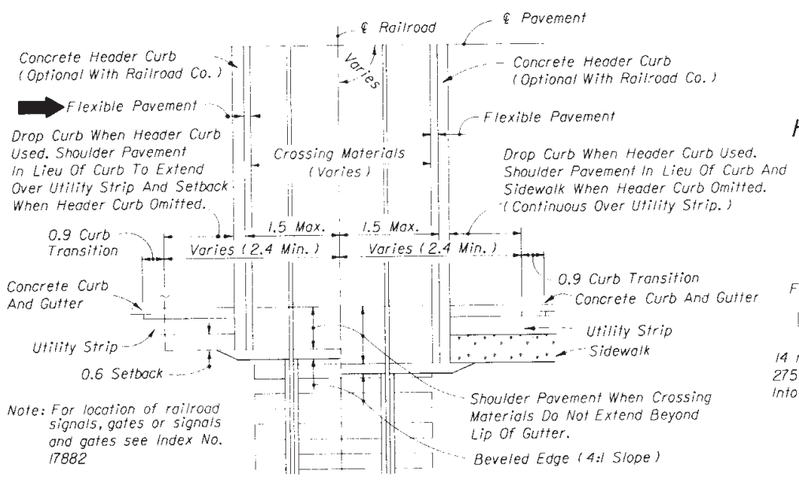

Note: For location of railroad signals, gates or signals and gates see Index No. 17882

HALF PLAN

MUNICIPAL

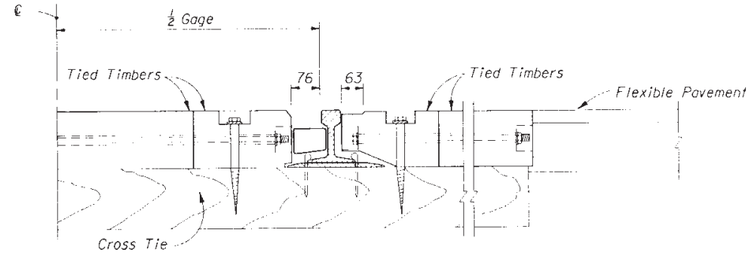

HALF SECTION TYPE D

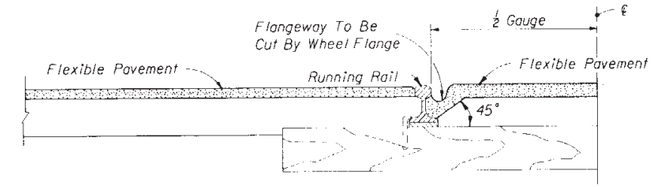

HALF SECTION TYPE E

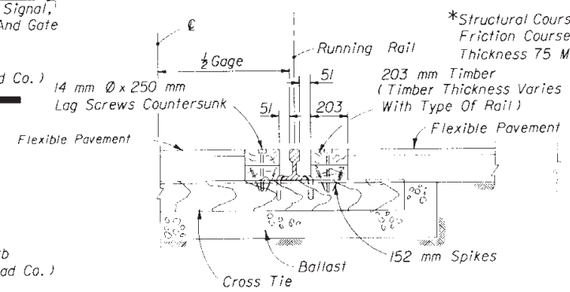

HALF SECTION TYPE G

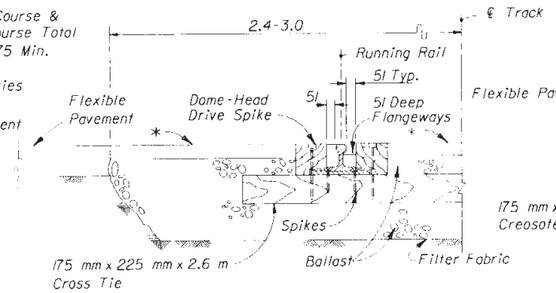

HALF SECTION TYPE G MODIFIED

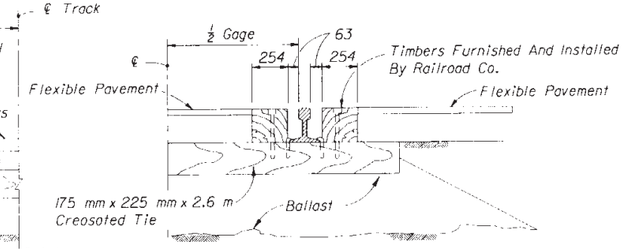

HALF SECTION TYPE H

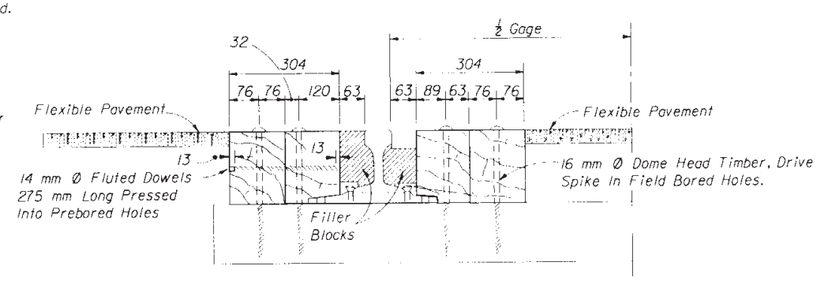

HALF SECTION TYPE L

NOTES

1. The agreement is a contract between the F.D.O.T. and the railroad company.
2. The railroad company may construct header curbs as needed.
3. The Railroad Company will furnish and install all material within 1.5 m of ℄ of tracks, except as specified in the agreement.
4. Gage is standard AREA track gage of 1435 mm.
5. Unless otherwise requested by the railroad company, the type(s) of crossing(s) used will be as follows:

	TYPE
Apalachicola Northern R.R. Co.	L
Atlanta and St. Andrews Bay Railway Co.	L
Florida East Coast Railway Co.	T-MOD. & G-MOD.
Burlington Northern Railroad	L
CSX Transportation, Inc	L
Norfolk Southern Corporation	
(a) Georgia Southern and Florida Railway Co.	G
(b) Live Oak, Perry and South Georgia Railway Co.	G
(c) St. Johns River Terminal Co.	G
(d) Georgia and Florida Railway Co.	G
(e) Southern Railway System	G

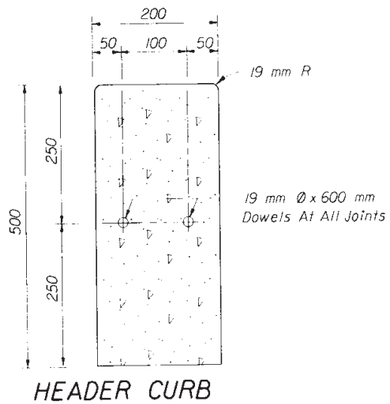

HEADER CURB

(Optional With Railroad Co.)

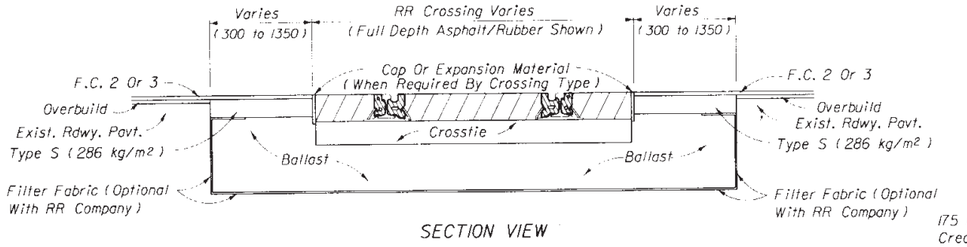

SECTION VIEW

TYPICAL FLEXIBLE PAVEMENT REPLACEMENT AT RR CROSSINGS

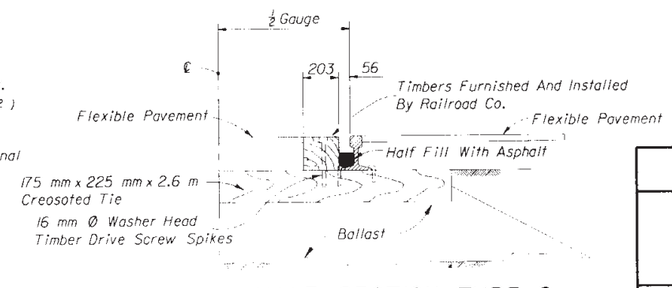

HALF SECTION TYPE S

TYPE D, E, G, G-MOD., H, L & S

STATE OF FLORIDA DEPARTMENT OF TRANSPORTATION
ROAD DESIGN

RAILROAD CROSSINGS

	Names	Dates
Designed By		
Drawn By	HW	08/69
Checked By	JKC	08/69
F.H.W.A. Approved:		03/20/75

Approved By Freddie Simmons
State Roadway Design Engineer

Revision No.	Sheet No.	Index No.
94	1 of 5	560

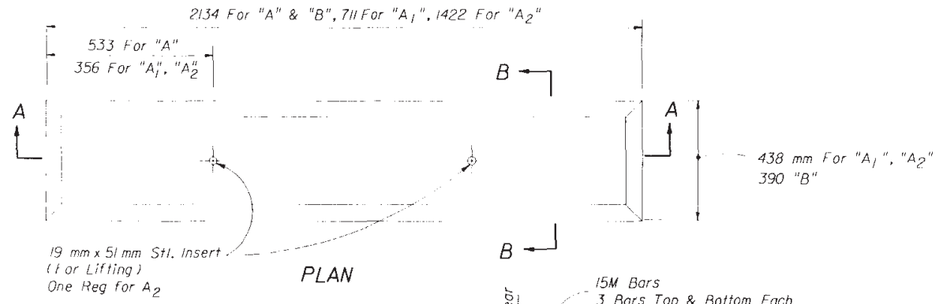

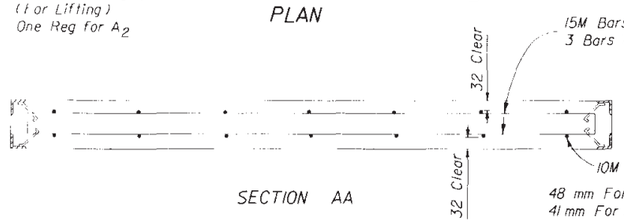

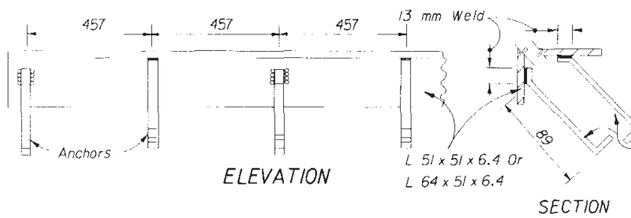

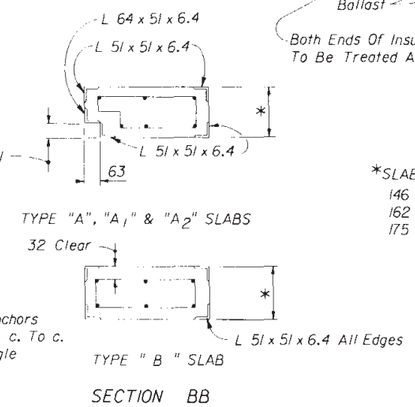

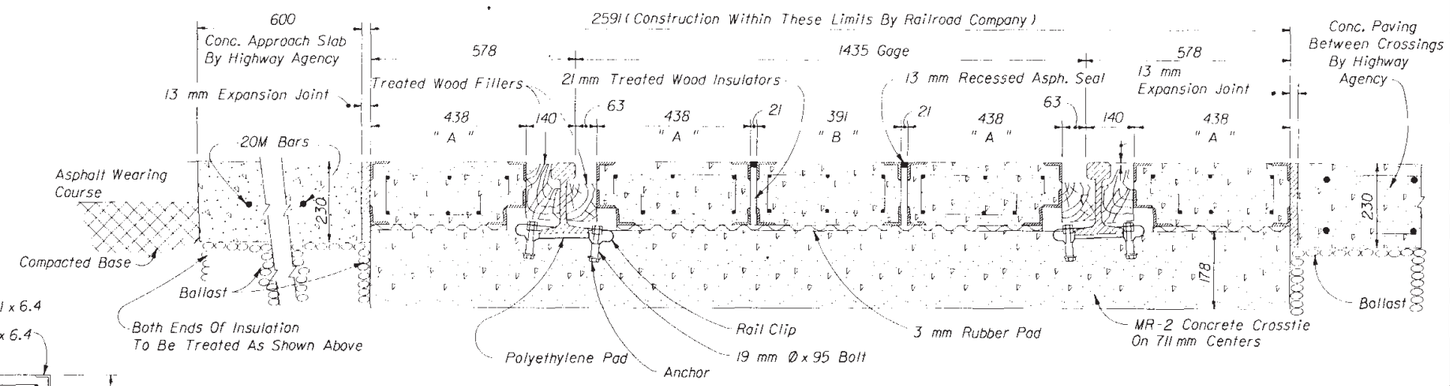

*SLAB THICKNESS VARIES
146 For 49.6 kg/m Rail
162 For 56.9 kg/m Rail
175 For 65.5 kg/m Rail

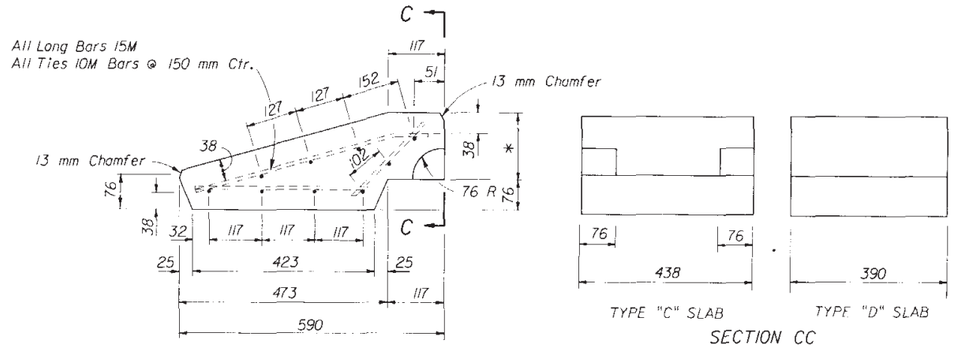

TYPE " C " & " D " SLAB DETAILS

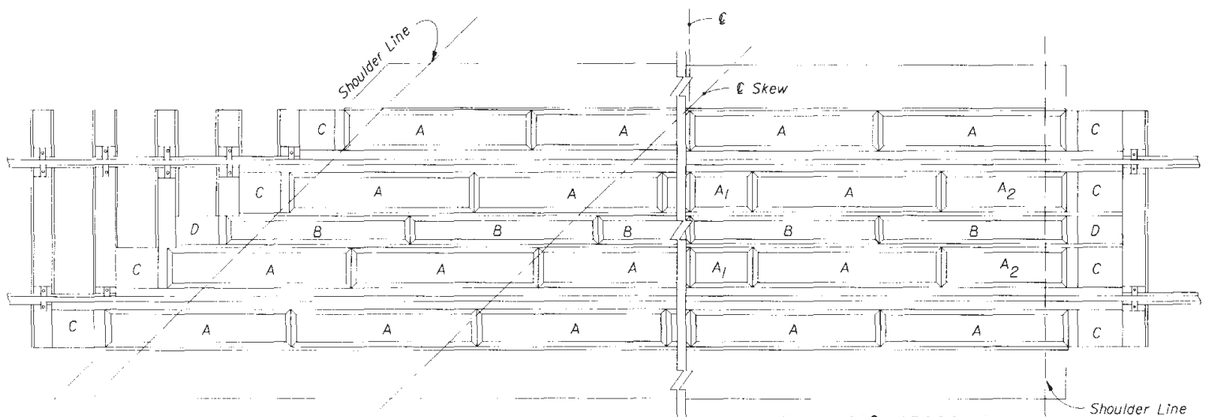

PLAN OF SKEWED CROSSING

PLAN-90° CROSSING

NOTES

1. The furnishing and installing of concrete crossties together with any necessary re-ballasting, grade adjustment and track alignment shall be done by the Railroad Company without cost to the Contractor or to the Highway Agency.
2. All concrete slabs, rubber pads for tops of ties and wood filler blocks shall be furnished and installed by the Railroad Company.
3. Concrete crossties shall be spaced on 711 mm centers.
4. Rubber pads shall be installed on concrete ties in field using contact cement.
5. Filler blocks shall be pressure treated pine or clear heart redwood and shall be shaped prior to treatment.
6. Cost of concrete and reinforcing steel necessary for approach slabs and paving between multiple crossings shall be paid for by the Highway Agency under the contract unit price for Cement Concrete Pavement Reinforced, (230 mm), M2.

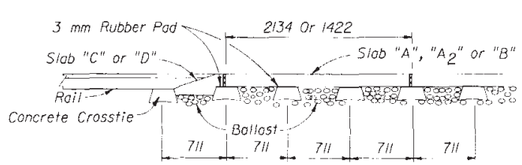

ELEVATION

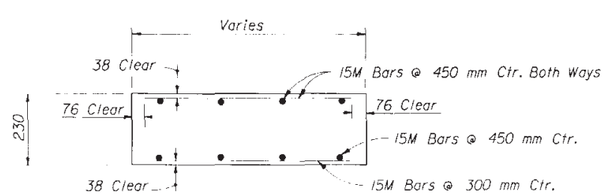

CONCRETE PAVING BETWEEN MULTIPLE CROSSINGS
(Cost Of Reinforcing To Be Included In The Cost Of Concrete, See Note No. 6)

TYPE K

STATE OF FLORIDA DEPARTMENT OF TRANSPORTATION
ROAD DESIGN

RAILROAD CROSSINGS

	Names	Dates	Approved By
Designed By			Fielder Simmons
Drawn By	HW	08/69	State Roadway Design Engineer
Checked By	JKC	08/69	
F.H.W.A. Approved:		03/20/75	

Revision No.	Sheet No.	Index No.
94	2 of 5	560

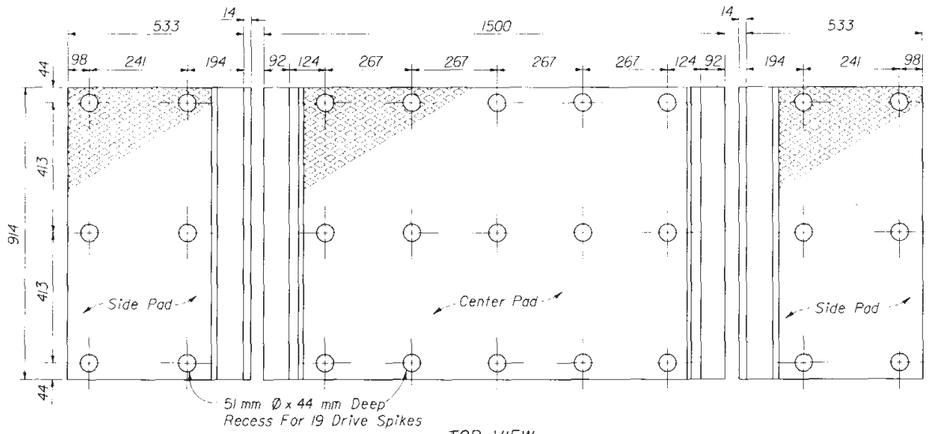

TOP VIEW

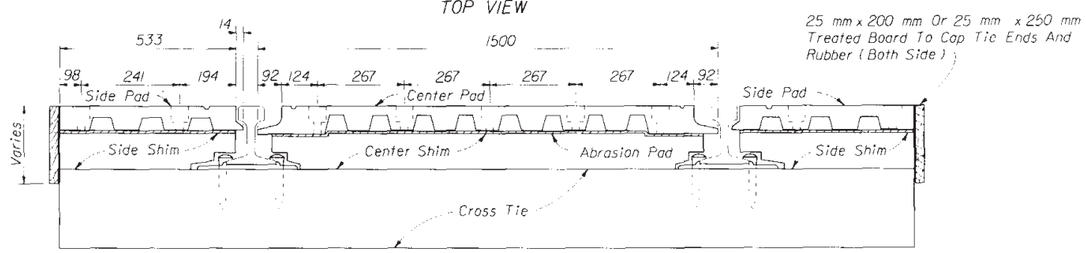

SECTION

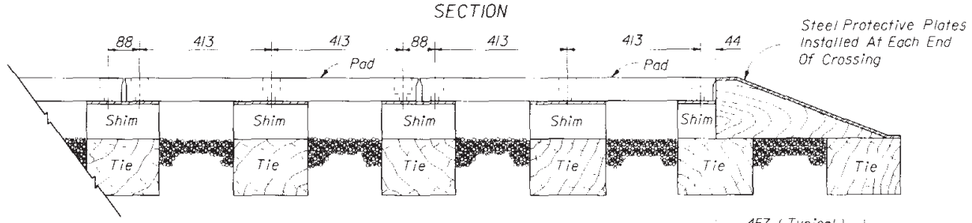

PARTIAL SECTION PARALLEL TO RAIL

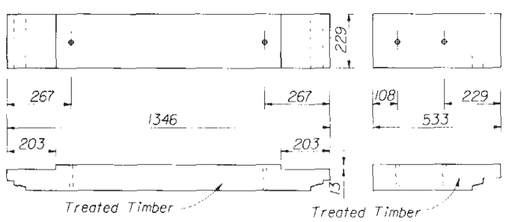

457 (Typical)

Shim Thickness Varies With Height Of Rail.

CENTER SHIM SIDE SHIM

TYPE R

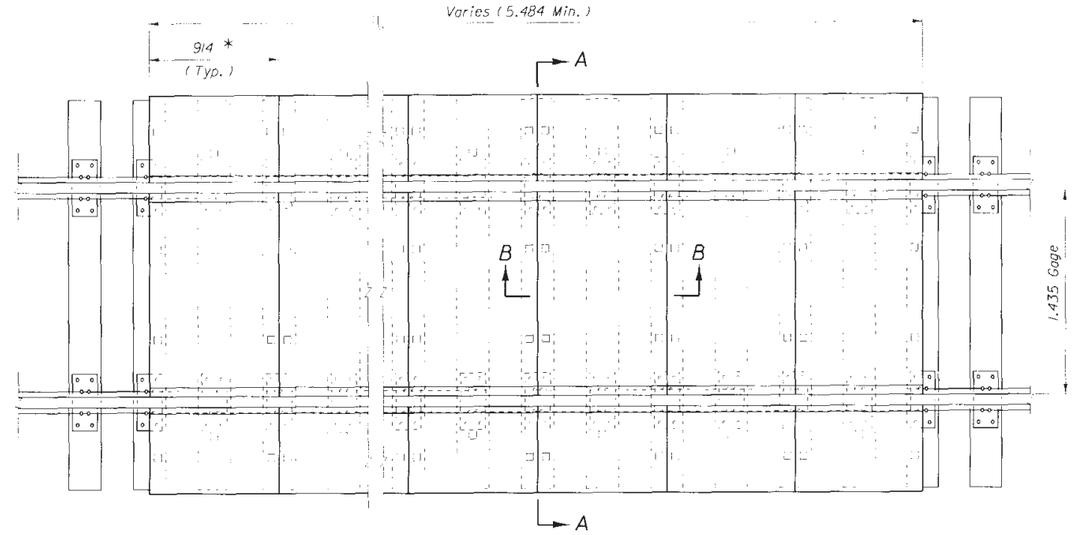

PLAN

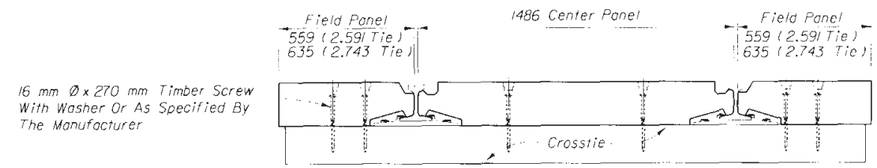

SECTION AA

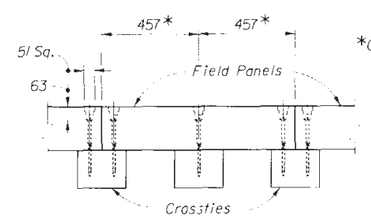

*Or As Specified By The Manufacturer

SECTION BB

HEAVY DUTY - FULL DEPTH RUBBER CROSSING

TYPE R FULL DEPTH

STOP ZONE	
Design Speed (km/h)	Zone Length Distance From Stop (m)
70 Or Less	80.0
80 - 90	110.0
100	150.0
110	180.0

NOTES

1. The crossings shown on this sheet are NOT to be used for multiple track crossings within zones for an existing or scheduled future vehicular stop. Zone lengths are charted above.
2. Crossings on this sheet may be used for single track crossings within the zones on the chart unless engineering or safety considerations dictate otherwise.
3. Tie spacing is critical, ties shall be spaced in accordance with the manufacturers specifications.
4. Details shown are for straight track installations. Materials are also available for curved track installations.
5. For additional details, materials required and installation procedures refer to the manufacturers specifications.

TYPES R RUBBER & R FULL DEPTH RUBBER

STATE OF FLORIDA DEPARTMENT OF TRANSPORTATION
ROAD DESIGN

RAILROAD CROSSINGS

	Names	Dates
Designed By		
Drawn By	LMF	11/75
Checked By	GSB	11/75
F.H.W.A. Approved:		10/11/78

Approved By Fielding Simmons
State Roadway Design Engineer

Revision No.	Sheet No.	Index No.
94	3 of 5	560

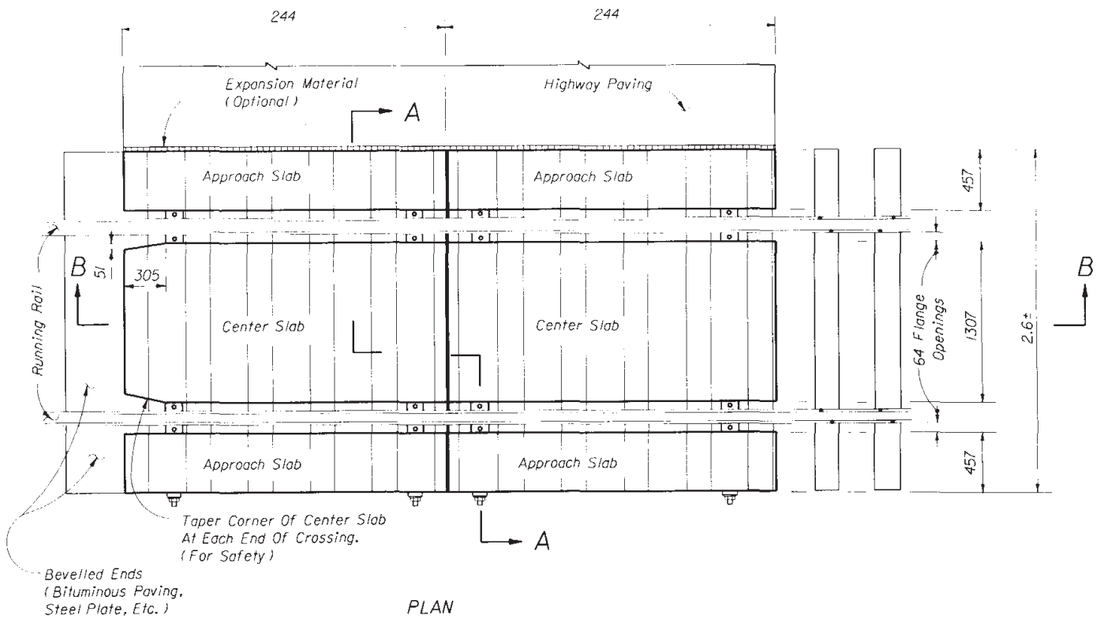

PLAN

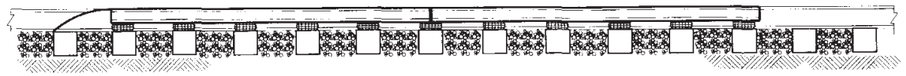

SECTION BB

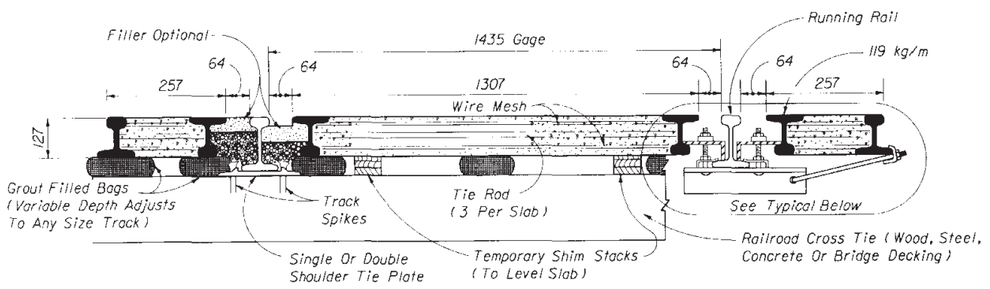

SECTION AA

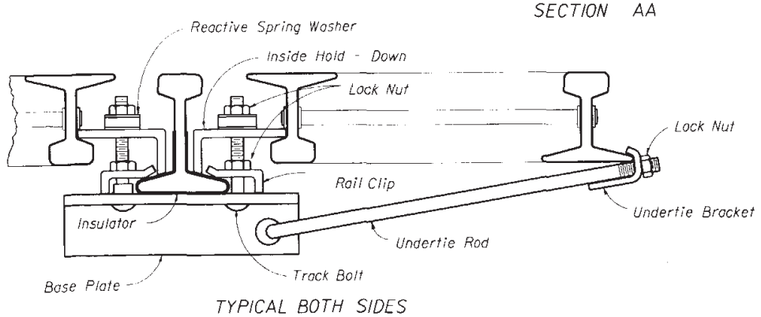

TYPICAL BOTH SIDES

NOTES

1. The reinforced concrete slabs are manufactured in 244 mm sections, 127 mm in depth to fit all rail sections 133 mm in height or heavier. Slabs are interchangeable and relocateable.
2. Center slabs are one piece construction allowing for 64 mm flange opening, 39.7 kg/m rail is used to encase, armor and reinforce slabs and is held to gauge with 3 tie rods per slabs.
3. Slabs are installed by a "flotation" process, supported on non-shrinkable, non-metallic grout positioned on the ties. Slabs can be placed on wood ties, concrete ties, steel ties, bridge decks or any other type of track support. No re-spacing of ties is necessary.
4. Slabs are secured to "running rails" with specially designed hardware. Insulation is to be provided for crossing in signal territory.
5. Curved slabs are fabricated to fit curved track with a minimum radius of 80.0 m. Special slabs are available for diamond crossings, turnouts, multiple tracks, bridge decks and rapid transit systems.
6. For additional details, materials required and installation procedures refer to the manufacturers specifications.
7. All asphalt will be installed in accordance with Index No. 513 and Section 300 of the Standard Specifications.

TYPE T

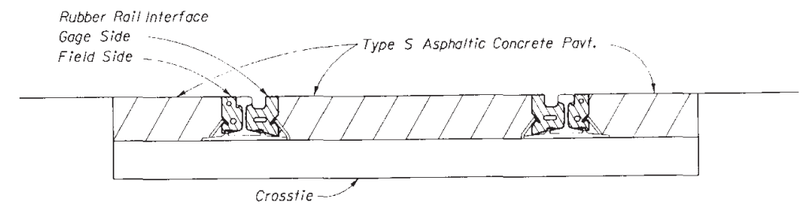

ALTERNATE INTERFACE
SECTION VIEW

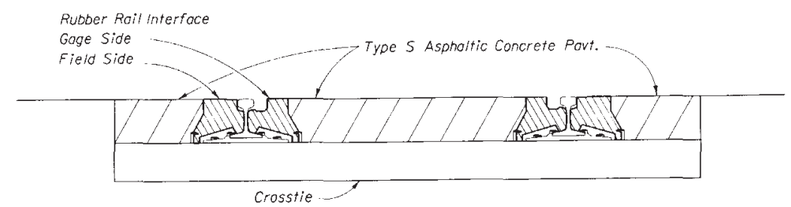

ALTERNATE INTERFACE
SECTION VIEW

NOTES

1. Rubber rail interface systems are manufactured to fit various rails from 56.9 kg/m to 67.5 kg/m.
2. The Railroad Company will furnish and install all crossing material except as specified in the agreement.
3. For additional details, methods required and installation procedures refer to the manufacturers specifications.

FULL DEPTH ASPHALT/RUBBER CROSSING

TYPE RS

TYPES T & RS

STATE OF FLORIDA DEPARTMENT OF TRANSPORTATION
ROAD DESIGN

RAILROAD CROSSINGS

	Names	Dates
Designed By		
Drawn By	LMF	02/77
Checked By	GSB	02/77
F.H.W.A. Approved:		05/03/77

Approved By Freddie Simmons
State Roadway Design Engineer

Revision No.	Sheet No.	Index No.
94	4 of 5	560

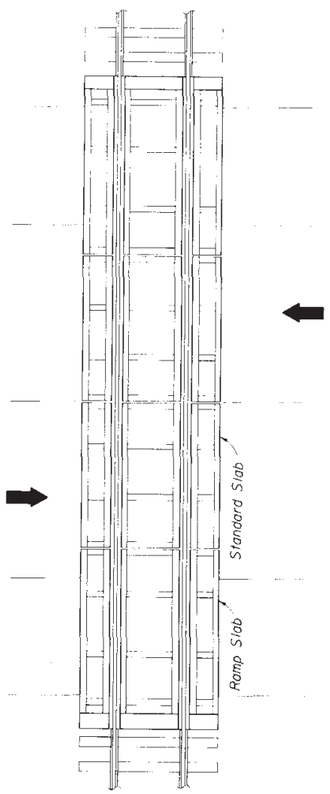

PLAN VIEW

TYPICAL 13.5 CROSSING

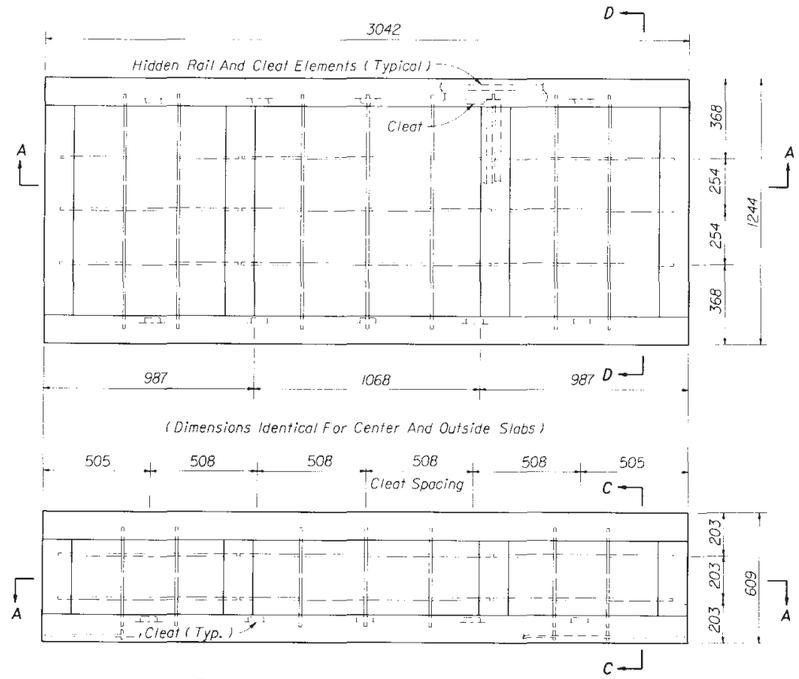

TOP VIEWS-CENTER SLAB AND OUTSIDE SLAB

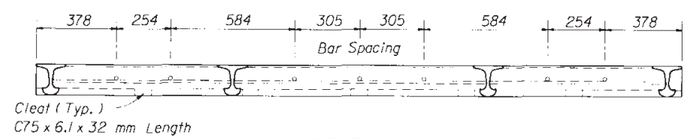

SECTION AA

STANDARD SLABS (PRECAST CONCRETE)

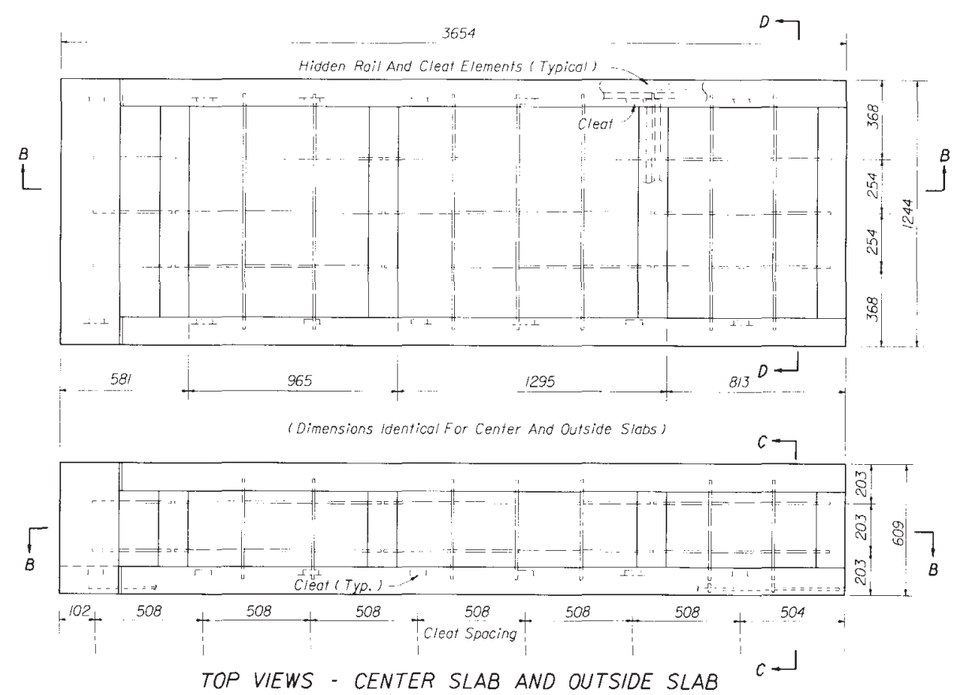

TOP VIEWS - CENTER SLAB AND OUTSIDE SLAB

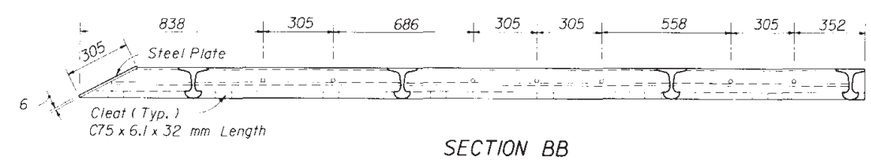

SECTION BB

RAMP SLABS (PRECAST CONCRETE)

SECTION CC

SECTION DD

STANDARD AND RAMP SLAB SECTIONS

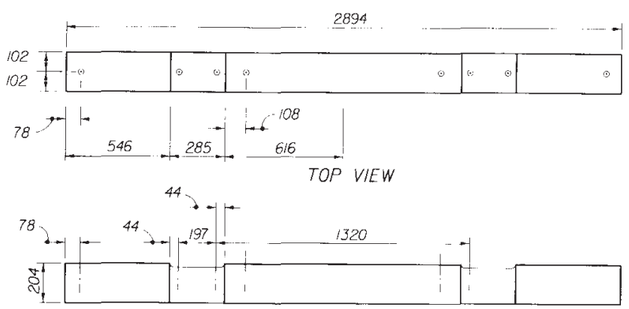

PRECAST CONCRETE (CROSSING TIE)

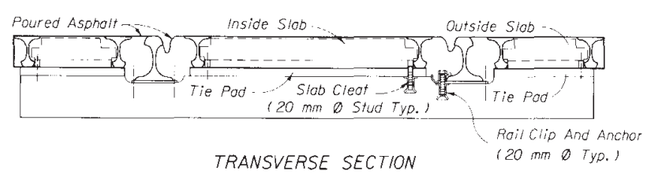

TRANSVERSE SECTION

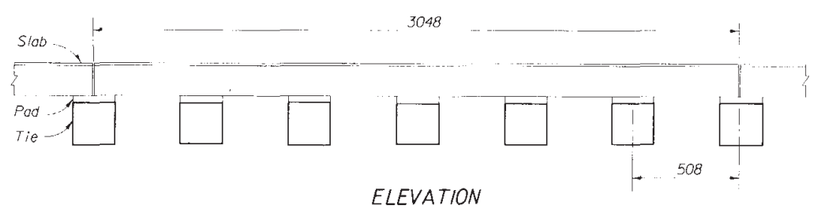

ELEVATION

TIE SPACING

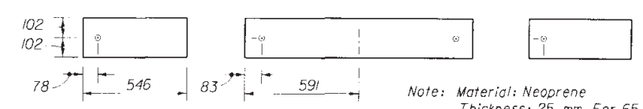

TOP VIEW

TIE PAD

Note: Material: Neoprene
Thickness: 25 mm For 65.5 kg/m Rail
13 mm For 56.9 kg/m Rail

NOTES

1. Slab frames are welded 44.6 kg/m rails.
2. Slab reinforcement all 15M bars.

STATE OF FLORIDA DEPARTMENT OF TRANSPORTATION
ROAD DESIGN

RAILROAD CROSSING

	Names	Dates
Designed By		
Drawn By	RWR	9/82
Checked By	JVG, JBW	9/82
F.H.W.A. Approved:		9/23/82

Approved By Freddie Simmons
State Roadway Design Engineer

Revision No.	Sheet No.	Index No.
94	5 of 5	560

TYPE T MODIFIED

CONTENTS

Preface
Manual On Uniform Traffic Control Devices
Abbreviations
Symbols
Definitions
Regulatory Speeds In Work Zones
Adjoining And/Or Overlapping Work Zone Signing
Intersecting Road Signing And Signals
Channelizing And Lighting Devices
Dropoffs In Work Zones
Warning Lights
Sight Distance To Delineation Devices
Channelizing And Lighting Device Consistency
Pedestrians And Bicyclist
Nighttime Flagging
Reflectorized Raised Pavement Markers
Sign Covering And Intermittent Work Stoppage Signing
Removing Pavement Markings
Superelevation
Lane Widths
Length Of Construction Sign
End Construction Sign
Detours
Variable Message Signs (VMS)
Above Ground Hazards
Clear Zone Widths
Roadside Barriers
Chart-Dropoffs
Identifications-Channelizing And Lighting Devices
Barrier Wall Transitions
Signing-Commonly Used Signs

PREFACE

All projects and works on highways, roads and streets shall have a traffic control plan. All work shall be executed under the established plan and Department approved procedures. This index contains information specific to the Federal and State guidelines and standards for the preparation of traffic control plans and for the execution of traffic control in work zones, for construction and maintenance operations and utility work on highways, roads and streets.

Index 600 provides Department policy and standards. Changes are only to be made thru Department approved procedures. Indexes 602 thru 651 provide typical application for various situations. Modification can be made to these Indexes as long as the changes comply with the M.U.T.C.D. and Department standards.

The sign spacings shown on the Indexes are typical (recommended) distances. These distances may be increased or decreased based on field conditions, in order to avoid conflicts or to improve site specific traffic controls.

MANUAL ON UNIFORM TRAFFIC CONTROL DEVICES

The Florida Department of Transportation has adopted the "Manual On Uniform Traffic Control Devices For Streets And Highways" (MUTCD) and subsequent revisions and addendums, as published by the U.S. Department of Transportation, Federal Highway Administration, for mandatory use on the State Maintained Highway System whenever there exists the need for construction, maintenance operations or utility work.

ABBREVIATIONS

Abbreviations assigned to the 600 series Roadway Design Standards and applicable to traffic control plans, unless otherwise identified in the plans, are as follows:

TCP	Traffic control plan(s)
MUTCD	'Manual On Uniform Traffic Control Devices For Streets And Highways'
TCZ	Traffic control through work zones
L	Taper length, buffer length or taper length plus buffer space
W	Width of taper transition in meters, i.e., lateral offset
S	Posted speed or off-peak 85 percentile speed (converted to km/h)
RPM	Raised reflectorized pavement marker
TMA	Truck mounted attenuator
COMM	Traffic Control Standards Committee

SYMBOLS

The symbols shown are found in the Traffic Control Zone Cell Library (TCZ.cel) on the CADD system.

Symbols assigned to the 600 series Roadway Design Standards and applicable to traffic control plans, unless otherwise identified in the plans, are as follows:

- Work Area, Hazard Or Work Phase (Any pattern within a boundary)
- Sign With 450 mm x 450 mm (Min.) Orange Flag And Type B Light
- Drum
- Type I Or Type II Barricade Or Vertical Panel Or Drum
- Type I Or Type II Barricade Or Vertical Panel Or Drum (With Flashing Light At Night Only)
- Type I Or Type II Barricade Or Vertical Panel Or Drum (With Steady Burning Light At Night Only). Tubular Markers May Be Used During Daylight Only.
- Type I Or Type II Barricade Or Vertical Panel Or Cone Or Tubular Marker Or Drum
- Cone Or Tubular Marker
- Type I, Type II Or Type III Barricade Or Vertical Panel Or Drum
- Type I, Type II Or Type III Barricade Or Vertical Panel Or Drum (With Flashing Light)
- Type I, Type II Or Type III Barricade Or Vertical Panel Or Drum (With Steady Burning Light)
- Type III Barricade
- Type III Barricade (With Flashing Light)
- Type III Barricade (With Steady Burning Light)
- Work Zone Sign
- Flagger
- Traffic Signal
- Advance Warning Arrow Panel
- Portable Signal
- Attenuator
- Stop Bar
- W — Work Vehicle With Flashing Beacon
- X — Shadow (S) Or Advance Warning (AW) Vehicle With Advance Warning Arrow Panel And Warning Sign.
- A — Truck Mounted Attenuator (TMA)
- Orange Flag For TCZ Signs
- Type B Light For TCZ Signs

STATE OF FLORIDA DEPARTMENT OF TRANSPORTATION
ROAD DESIGN

TRAFFIC CONTROL THROUGH WORK ZONES

GENERAL INFORMATION FOR
TRAFFIC CONTROL THROUGH WORK ZONES

	Names	Dates
Designed By		12/87
Drawn By		12/87
Checked By		12/87

Approved By: Charles A. Scott
State Traffic Plans Engineer

Revision No.	Sheet No.	Index No.
94	1 of 10	600

F.H.W.A. Approved:

DEFINITIONS

Regulatory Speed (In Work Zones) the minimum

The maximum permitted travel speed posted for the work zone as indicated by the regulatory speed limit signs. The work zone speed must be shown or noted in the plans. This speed should be used as a design speed to determine runout lengths, departure rates, flare rates, lengths of need, clear widths, taper lengths, crash cushion requirements, marker spacings, superelevation and other similar features.

Advisory Speed

The maximum recommended travel speed through a curve or a hazardous area.

Travel Way

The intended path for vehicular traffic through or around obstructions in construction, maintenance, utility and other work zones on highways, roads and streets. For traffic control through work zones, travel way includes auxiliary lanes, shoulders and any other permanent or temporary surface intended for the path of vehicular traffic.

Detour

A temporary travel way that branches from the direct or regular route of travel, to bypass a section of the route which is closed or blocked by construction, major maintenance, roadway damage or a traffic emergency and that rejoins the direct or regular route beyond that section.

Above Ground Hazard

An above ground hazard is any object, material or equipment other than traffic control devices that encroaches upon the travel way or that is located within the clear zone which does not meet the Departments safety criteria, i.e., anything that is greater than 100 mm in height and is firm and unyielding or doesn't meet breakaway requirements.

REGULATORY SPEEDS IN WORK ZONES

Traffic Control Plans (TCPs) for all projects must include specific regulatory speeds for each phase of work. This can either be the posted speed or a reduced speed. The speed shall be noted in the TCPs; this includes indicating the existing speed if no reduction is to be made. Regulatory speeds are to be uniformly established through each phase.

In general, the regulatory speed should be established to route vehicles safely through the work zone as close to normal highway speed as possible. On limited access facilities the posted speed for work zones should not be reduced below 55 mph.
On other facilities the regulatory speed should not be reduced more than 20 mph below the posted speed and never below the minimum statutory speed for the class of facility. This reduction is to be done in 10 mph per 150.0 meter increments.

Temporary regulatory speed signs shall be removed as soon as the conditions requiring the reduced speed no longer exist. Once the work zone regulatory speeds are removed, the regulatory speed existing prior to construction will automatically go back into effect unless new speed limit signing is provided for in the plans.

On projects with interspaced work activities speed reductions should be located in proximity to those activities which merit a reduced speed, and not "blanketed" for the entire project. At the departure of such activities, the normal highway speed should be posted to give the motorist notice that normal speed can be resumed.

If the existing regulatory speed is to be used, consideration should be given to supplementing the existing signs when the construction work zone is between existing regulatory speed signs. For projects where the reduced speed conditions exist for greater than 1.6 kilometers in rural areas (non-interstate) and on rural or urban interstate, additional regulatory speed signs are to be placed at no more than 1.6 kilometer intervals. Engineering judgement should be used in placement of the additional signs. Locating these signs beyond ramp entrances and beyond major intersections are examples of proper placement. For urban situations (non-interstate), additional speed signs are to be placed at a maximum of 300.0 meters apart.

When field conditions warrant speed reductions greater than those shown in the TCP the contractor may submit to the project engineer for approval by the Department, a signed and sealed study to justify the need for further reducing the posted speed, or, the engineer may request the District Traffic Operations Engineer (DTOE) to investigate the need. It will not be necessary for the DTOE to issue regulations for regulatory speeds in work zones due to the revised provisions of F.S. 316.0745(2) (b). Advisory Speed plates will be used at the option of the field engineer for temporary use while processing a request to change the regulatory speed specified in the plans when deemed necessary. Advisory speed plates cannot be used alone but must be placed below the construction warning sign for which the advisory speed is required.

For additional information refer to the FDOT Roadway Plans Preparation Manual, Volume 1, Chapter 10.

RAILROADS

Railroad crossings affected by a construction project should be evaluated for traffic controls to reduce queing on the tracks. The evaluation should include as a minimum : traffic volumes, distances from the tracks to the intersections, lane closure or taper locations, signal timing, and etc.

ADJOINING AND/OR OVERLAPPING WORK ZONE SIGNING

Adjoining work zones may not have sufficient spacing for standard placement of signs and other traffic control devices in their advance warning areas or in some cases other areas within their traffic control zones. Where such restraints or conflicts occur or are likely to occur, one of the following methods will be employed to avoid conflicts and prevent conditions that could lead to misunderstanding on the part of the traveling public as to the intended travel way by the traffic control procedure applied:

(a) For scheduled projects the engineer in responsible charge of project design will resolve anticipated work zone conflicts during the development of the project traffic control plan. This may entail revision of plans on preceding projects and coordination of plans on concurrent projects.

(b) Unanticipated conflicts arising between adjoining in progress highway construction projects will be resolved by the Resident Engineer for projects under his residency, and, by the District Construction Engineer for in progress projects under adjoining residencies.

(c) The District Maintenance Engineer will resolve anticipated and occuring conflicts under the following work zone conditions.

1. Within scheduled maintenance operations.
2. Between scheduled maintenance operations, maintenance construction, permitted works and/or in progress highway construction projects.

(d) The Unit Maintenance Engineer will resolve conflicts that occur within routine maintenance works; between routine maintenance work, unscheduled work and/or permitted work; and, between unit controlled maintenance works and highway construction projects.

INTERSECTING ROAD SIGNING AND SIGNALS

Signing for the control of traffic entering and leaving work zones by way of intersecting highways, roads and streets shall be adequate to make drivers aware of work zone conditions. Under no condition will intersecting leg signing be less than a ROAD CONSTRUCTION AHEAD sign, including light and flag, for approaching vehicles and a END CONSTRUCTION sign for departure vehicles.

Existing traffic signal operations that require modification in order to carry out work zone traffic control shall be included in the TCP and be approved by the District Traffic Operations Engineer. The need for temporary signal loops or other methods of actuation shall be determined by the District Traffic Operations Engineer and the designer and included in the TCP.

STATE OF FLORIDA DEPARTMENT OF TRANSPORTATION
ROAD DESIGN

TRAFFIC CONTROL THROUGH WORK ZONES

GENERAL INFORMATION FOR
TRAFFIC CONTROL THROUGH WORK ZONES

	Names	Dates	Approved By Clark A. Scott, State Traffic Plans Engineer
Designed By		12/87	
Drawn By		12/87	
Checked By		12/87	
F.H.W.A. Approved:			

Revision No.	Sheet No.	Index No.
94	2 of 10	600

CHANNELIZING AND LIGHTING DEVICES

Channelizing and lighting devices for work zone traffic control shall be as prescribed in Part VI of the MUTCD, subject to supplemental revision and approval by the office of Construction.

Primary work zone traffic control devices are shown on Sheet 7 of 10 for the purpose of ready identification. Specifications for the devices are under the authority of the office of Construction. Approved devices are listed on the Departments Qualified Product List.

DROPOFFS IN WORK ZONES

Acceptable warning and barrier devices for traffic control at dropoffs in work areas are detailed on Sheet 5 of 10. Unless otherwise specified in the plans, the contractor may use any of the barrier types (including optional shoulder treatment) shown in note 3 on sheet 5 of 10. Optional shoulder treatment shall be included under Lump Sum MOT.

WARNING LIGHTS

Warning lights shall be in accordance with Section 6E-5 of the MUTCD except for the application limitations and methods of payment stipulated below:

Flashing

Type A Low Intensity Flashing Warning Lights are to be mounted on barricades, drums, vertical panels or advance warning signs (except as noted below) and are intended to continually warn drivers that they are approaching or proceeding in a hazardous area. Flashing lights shall not be used to delineate the intended path of travel, and not placed with spacings that will form a continuous line to the drivers eye. The Type A light will be used to mark obstructions that are located adjacent to or in the intended travel way. Type A lights shall not be used in conjunction with the first advance warning sign nor the second such sign when used.

Type B High Intensity Flashing Warning Lights shall be mounted on the first advanced warning sign and on the first and second advanced warning sign where two or more signs are used; this applies to all approaches to any work zone.

Steady-Burn

Type C Steady-Burn Lights are to be mounted on barricades, drums, concrete barrier walls or vertical panels and used in combination with those devices to delineate the travel way on lane closures, lane changes, detour curves and other similar conditions. Steady-burn lights are intended to be placed in a line to delineate the traveled way through and around obstructions in the transition, buffer, work and termination areas of the traffic control zone. Their intended purpose is not for warning drivers that they are approaching or proceeding through a hazardous area.

SIGHT DISTANCE TO DELINEATION DEVICES

Transition tapers should be obvious to drivers. If restricted sight distance is a problem (e.g., a sharp vertical or horizontal curve), the taper should begin well in advance of the view obstruction. The beginning of tapers should not be hidden behind curves.

CHANNELIZING AND LIGHTING DEVICE CONSISTENCY

Barricades, vertical panels, cones, tubular markers and drums shall not be intermixed within either the lateral transition or within the tangent alignment.

PEDESTRIANS AND BICYCLISTS

When an existing pedestrian way or bicycle way is located within a traffic control work zone, accommodation must be maintained.

NIGHTTIME FLAGGING

Nighttime flagging will require proper illumination of the flagger. A well lighted flagging station and/or a reflectorized paddle or reflectorized flag, plus a flashlight, lantern or other lighted signal that will display a red warning light shall be used.

Lights, reflectorized paddles, reflectorized flags and reflectorized vests, shirts or jackets approved by the Department must be used to flag traffic at night. The STOP face of paddles shall be reflectorized red with white reflectorized letters and border, and the SLOW face shall be reflectorized orange with black letters and border. Flagger vests, shirts or jackets shall be reflectorized orange.

The flagger must be clearly visible to approaching traffic for a distance sufficient to permit proper response by the motorist to the flagging instructions, and to permit traffic to reduce speed or to stop as required before entering the work site. Flaggers shall be positioned to maintain maximum color contrast between the flaggers reflective garments and equipment and the work area background.

REFLECTORIZED RAISED PAVEMENT MARKERS

Class A or B RPM's shall be installed on the lanelines of transitions, crossovers and detours and on the edgelines of gore areas within the work zone. The spacing shall be 12.0 meters on tangent sections and 6.0 meters on transitions, curves and crossovers. It shall be the contractors responsibility to replace damaged or missing RPM's. This cost shall be included in the cost of the temporary RPM's substituted. Approved R.P.M's are listed on the Departments Qualified Product List.

SIGN COVERING AND INTERMITTENT WORK STOPPAGE SIGNING

Existing signs that conflict with temporary work zone signing shall be removed or covered as approved by the engineer. Traffic control signs that require covers when no work is being performed in a work area shall be fully covered with a durable opaque sheet material. Plastic film and woven fabrics including burlap will not be permitted. Covering of only the legend or symbol will not be permitted. Reflective coverings will not be permitted. Hinged signs designed to cover when folded and sign blanks will be permitted.

Covers, blanks, hinged panels and intermittent work stoppage shields and plaques are incidental to work operation signs and are not to be paid for separately.

REMOVING PAVEMENT MARKINGS

Existing pavement markings that conflict with temporary work zone delineation shall be removed by any method approved by the Engineer, where operations exceed one daylight period; however, painting over existing pavement markings will not be permitted. Full pavement width overlays of either asphalt concrete Type III, or FC-3 is a positive means to achieve obliteration.

SUPERELEVATION

Horizontal curves constructed in conjunction with work zone traffic control should have the required superelevation applied to the design radii . Under conditions where normal cross slope controls curvature, the minimum radii that can be applied are listed in the table below.

MINIMUM RADII FOR NORMAL CROSS SLOPES

DETOUR DESIGN SPEED		MINIMUM RADIUS R
MPH	km/h	meter
65	110	955.0
60	100	730.0
55	90	560.0
50	80	425.0
45	70	330.0
40	60	250.0
35	60	185.0
30	50	130.0

Superelevate When Smaller Radii Used

LANE WIDTHS

Lane widths of through roadways should be maintained through work zone travel ways wherever practical. The minimum widths for work zone travel lanes shall be as follows: 3.3 meters for Interstate with at least one 3.6 meter lane provided each direction, unless formally excepted by the Federal Highway Administration; 3.3 meters for freeways; and 3.0 meters for all other facilities.

LENGTH OF CONSTRUCTION SIGN

The length of construction sign (G20-1) bearing the legend ROAD CONSTRUCTION NEXT___ MILES is required for all projects of more than 3.2 kilometers in length. The sign shall be located at begin construction points.

STATE OF FLORIDA DEPARTMENT OF TRANSPORTATION
ROAD DESIGN

TRAFFIC CONTROL THROUGH WORK ZONES

GENERAL INFORMATION FOR TRAFFIC CONTROL THROUGH WORK ZONES

	Names	Dates
Designed By		12/87
Drawn By		12/87
Checked By		12/87

Approved By Clark A. Scott
State Traffic Plans Engineer

F.H.W.A. Approved:

Revision No.	Sheet No.	Index No.
94	3 of 10	600

END CONSTRUCTION SIGNS

The END CONSTRUCTION sign (G20-2) should be erected approximately 150 meters beyond the end of a construction or maintenance project, unless other distance called for in the plans. Where other Construction or Maintenance Operations occur within 1.6 kilometers this sign should be omitted and signing coordinated in accordance with Index No. 600, ADJOINING AND/OR OVERLAPPING WORK ZONE SIGNING.

DETOURS

Detours can be located either within the direct or regular route boundary or over highways, roads or streets outside the direct or regular route boundary. Engineering judgement should be used to determine when detour signing is required for minor shift to the direct or regular route.

VARIABLE MESSAGE SIGNS (VMS)

The VMS can be used to:
(1) Supplement standard signing in construction/maintenance work zones.
(2) Reinforce static advance warning messages.
(3) Provide motorists with updated guidance information.

The message should be visible and legible at a minimum distance of 270.0 meters. All messages should be cycled so that two message cycles are displayed to a driver while approaching the sign from 270.0 meters at 55 mph.

VMS should be placed approx. 150.0 to 240.0 meters in advance of the work zone conflicts or 2.4 to 3.2 kilometers in advance of complex traffic control schemes which require new and/or unusual traffic maneuvers.

If VMS are to be used at night, the intensity of the flashers shall be reduced during darkness when lower intensities are desirable.

For additional information refer to the FDOT Roadway Plans Preparation Manual, Volume 1, Chapter 10.

ROADSIDE BARRIERS

When connecting temporary concrete barrier wall to guardrail the connection shall be made in accordance with Index No. 410.

ABOVE GROUND HAZARD

Above ground hazards (see definitions) are to be considered work areas during working hours and treated with appropriate work zone traffic control procedures. During non-working hours, all objects, materials and equipment that constitute an above ground hazard must be stored/placed outside the travel way and clear zone or be shielded by a barrier or crash cushion.

For above ground hazards within a work zone the clear zone required should be based on the regulatory speed posted during construction.

CONSTRUCTION SIGN SUPPORTS

All post mounted construction signs shall be installed on either round aluminum or steel channel post as specified in the table below.

SUPPORTS FOR MAINTENANCE OF TRAFFIC SIGNS

SIGN SIZE	SIGN BRACKET	ROUND ALUMINUM	DEPTH IN GROUND	STEEL CHANNEL	DEPTH IN GROUND
600 x 900	2-I	NPS 2 x 3.91	610	1.13 kg F/M*	900
1200 x 1200 DIAMOND	2-I & 1-II	NPS 3.5 x 5.74	1000	**	900
1500 x 1200	3-I	NPS 3.5 x 5.74	1000	**	900
600 x 750	2-I	NPS 2 x 3.91	610	1.13 kg F/M*	900
1200 x 1200	2-II	NPS 3 x 5.49	762	**	900
1500 x 600	3-I	NPS 3 x 5.49	762	1.36 kg F/M*	900
1500 x 900	3-I	NPS 3 x 5.74	1000	1.81 kg F/M*	900

* F/M Indicates Type F or Type M

** Requires two 1.36 kg/m steel channel (F/M) at 762 mm center to center. All sign brackets shall be Type I. The total number of brackets shall be per post as tabulated, except the "Diamond" sign which shall use two Type I brackets per post.

The 1.81 kg/m steel channel shall be installed with approved breakaway bases.

Refer to Design Standard 11860, Sheet 2 of 2, for round aluminum sign bracket details, and 11865 Sheet 1 of 1 for steel channel sign attachment details, approved steel channel breakaway bases and notes.

CLEAR ZONE WIDTHS

The term 'clear zone' describes the unobstructed relatively flat area, impacted by construction, extending outward from the edge of the travel way. The table below gives clear zone widths in work zones for medians and roadside conditions other than for roadside canals; where roadside canals are present, clear zone widths are to conform with the distances to canals as described in Vol. 1, Ch. 4, Sec. 4.2 and Exhibits 1-4-C and 1-4-D of the Plans Preparation Manual.

CLEAR ZONE WIDTHS FOR WORK ZONES

WORK ZONE SPEED (MPH)	WORK ZONE SPEED (km/h)	WIDTHS (meters)
60-70	100-110	9.0
55	90	7.2
45-50	70-80	5.4
30-40	50-60	4.2
ALL SPEEDS CURB & GUTTER	ALL SPEEDS CURB & GUTTER	1.2 BEHIND FACE OF CURB

SIGN MATERIALS

Mesh signs may be used only for Daylight Operations as noted in the standards. Type B Lights and Orange Flags are not required.

Vinyl signs may be used for Day or Night Operations not to exceed 12 hours except as noted in the standards. Type B Lights and Orange Flags are not required.

All signs shall be post mounted if operation exceeds 12 hours except as noted in the standards.

STATE OF FLORIDA DEPARTMENT OF TRANSPORTATION
ROAD DESIGN

TRAFFIC CONTROL THROUGH WORK ZONES

GENERAL INFORMATION FOR
TRAFFIC CONTROL THROUGH WORK ZONES

	Names	Dates
Designed By		12/87
Drawn By		12/87
Checked By		12/87

Approved By Clark A Scott

F.H.W.A. Approved:	Revision No.	Sheet No.	Index No.
	94	4 of 10	600

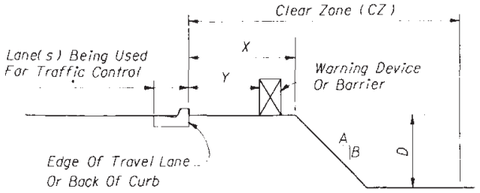

CONDITION I

SHOULDER DROPOFF

1. This condition to be used when excavating adjacent to lane(s) being used for traffic control.
2. Distance X is to be the maximum practical under project conditions.
3. Distance Y should be maximum practical for project conditions. 0.6 meters is desirable.
4. Warning devices or barriers are not to encroach on lane width(s) designated for traffic control.
5. For specific requirements use Chart A or B below, as applicable.

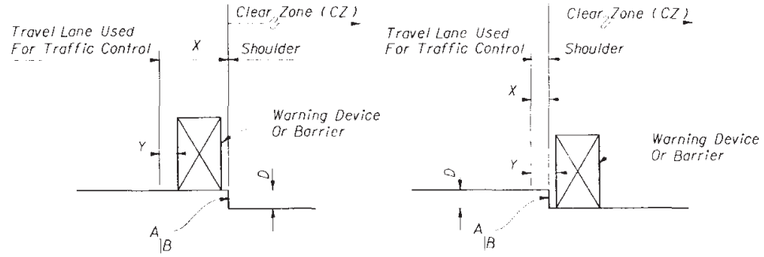

CONDITION II

DROPOFF BETWEEN TRAVEL LANE AND SHOULDER

1. This condition is to be used when resurfacing or milling travel lanes and/or adjacent shoulders.
2. Warning device or barrier must not encroach on lane width(s) designated as minimum for traffic control.
3. X and Y should be maximum practical for project conditions. May be zero.
4. For specific requirements use Chart A below.

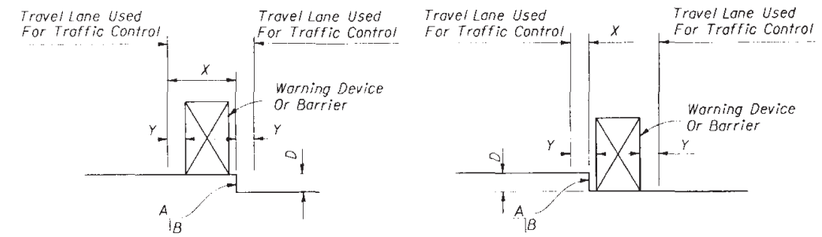

CONDITION III

DROPOFF BETWEEN TRAVEL LANES

1. This condition is to be used for resurfacing or milling travel lanes.
2. Warning device or barrier must not encroach on lane width(s) designated as minimum for traffic control.
3. X and Y should be maximum practical for project conditions. May be zero.
4. Sign W8-9A with UNEVEN PAVEMENT plaque required at intervals of 0.8 kilometers maximum throughout this condition.
5. For specific requirements use Chart C below.

CHART A

ALL SPEEDS
NO CURB AND GUTTER

X (m)	D (mm)	B: A	Device Required	
			Active ◪ Work Zone	Inactive ◪ Work Zone
0-1.2	≤ 50	Any	None	None
0-1.2	>50 to ≤75	Any	Warning Device (b)	Warning Device (b)
0-1.2	>75	Any	Warning Device (b)	Barrier (b)
> 1.2-3.0	≤75	Any	None	None
> 1.2-3.0	>75 to ≤300	Any	Warning Device (b)	Warning Device (b)
> 1.2-3.0	> 300	Any	Warning Device (b)	Barrier (b)
> 3.0-CZ (a)	≤ 300	Any	None	None
> 3.0-CZ (a)	>300 < 600	1: 3 Or Flatter	None	None
> 3.0-CZ (a)	>300 < 600	Steeper Than 1: 3	Warning Device (b)	Warning Device (b)
> 3.0-CZ (a)	≥ 600	1: 3 Or Flatter	None	None
> 3.0-CZ (a)	≥ 600	Steeper Than 1: 3	Warning Device (b)	Barrier (b)

(a) Clear Zone (CZ) is to be determined per Index No. 600 sheet 4 of 10.

(b) Optional shoulder treatment allowed.

CHART B

70 km/h (45 MPH) OR LESS (c,d,e)
CURB AND GUTTER

X (m)	D (mm)	B: A	Device Required	
			Active ◪ Work Zone	Inactive ◪ Work Zone
0-3.0	≤ 300	Any	None	None
0-3.0	> 300	Any	Warning Device (f)	Warning Device (f)
> 3.0	Any	Any	None	None

(c) This chart to be used with Condition I only.

(d) This chart to be used for curb heights ≥ 150 mm. For curb heights < 150 mm use Chart A.

(e) For requirements of dropoffs behind curb and gutter, when curb and gutter has not been constructed, use Chart A.

(f) Optional shoulder treatment allowed.

CHART C

ALL SPEEDS
CURB AND GUTTER OR NO CURB AND GUTTER

X (m)	D (mm)	B: A	Device Required	
			Active ◪ Work Zone	Inactive ◪ Work Zone
0-CZ	≤ 38	Any	None	None
0-CZ	>38 to ≤75	Any	Warning Device (g)	Warning Device (g)
0-CZ	>75	Any	Warning Device	Barrier

(g) Optional travel lane treatment allowed.

◪ An active work zone is defined as those hours when the contractor's crew, permitted work force or Department forces are performing work operations which affect or relate to dropoffs, either day or night.

◪ An inactive work zone is defined as those periods when the contractor's crew, permitted work force or Department forces have left the work site or are performing tasks which do not affect or relate to dropoffs.

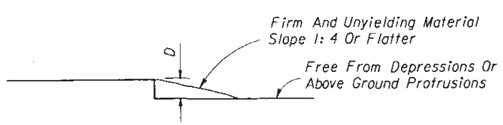

OPTIONAL SHOULDER TREATMENT

1. This optional method may be used in lieu of warning devices or barriers when required by Charts A or B.

NOTES

1. These conditions and treatments can be applied only in work areas that fall within a properly signed work zone.
2. The following are defined as acceptable warning devices: For further details, see Part VI of the MUTCD.
   a. Vertical Panel
   b. Type I Or Type II Barricades
   c. Drum
   d. Cone
   e. Tubular Marker
3. Where barrier is specified either of the types below may be used.
   a. Temporary barrier wall installed in accordance with Standard Index No. 415 and Standard Specifications.
   b. Temporary guardrail installed in accordance with the Standard Specifications and Standard Index No. 400. Materials may be new and/or used, but used material must be structurally and functionally sound as determined by the Engineer. End anchorages per Standard Index No. 400 will also be required.
   c. Temporary Curb installed in accordance with standard Index No. 600.
4. When warning devices are used for a dropoff condition, a minimum number of four devices is required.
5. Warning device spacing shall be as follows:
   A. On Taper
   Maximum spacing between cones and tubular markers shall be 7.5 m. Maximum spacing between Type I or Type II barricades or vertical panels or drums shall be based on the speed limit as follows: 5.0 m up to 25 MPH; 10.0 m for 30 MPH - 40 MPH; 15.0 m for 45 MPH and greater.
   B. On Tangents
   Maximum spacing for cones or tubular markers is 7.5 meter centers and maximum spacing for Type I or Type II barricades, drums or vertical panels is 15.0 meter centers for first 75.0 meters; thereafter cones or tubular markers at 15.0 meter centers and Type I or Type II barricades, drums or vertical panels at 30.0 meter centers.

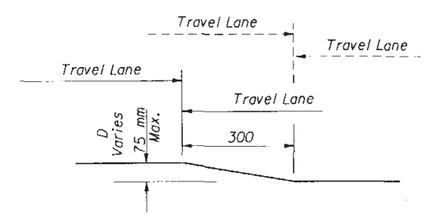

MILLING OR SURFACING

OPTIONAL TRAVEL LANE TREATMENTS

1. This optional method may be used in lieu of warning devices when required by Chart C.
2. Optional treatment allowed only when D is 75 mm or less.

DROPOFFS IN WORK ZONES

STATE OF FLORIDA DEPARTMENT OF TRANSPORTATION
ROAD DESIGN

TRAFFIC CONTROL THROUGH WORK ZONES

GENERAL INFORMATION FOR TRAFFIC CONTROL THROUGH WORK ZONES

	Names	Dates	Approved By Clark A Scott, State Traffic Plans Engineer		
Designed By		12/87			
Drawn By		12/87			
Checked By		12/87	Revision No.	Sheet No.	Index No.
F.H.W.A. Approved:			94	5 of 10	600

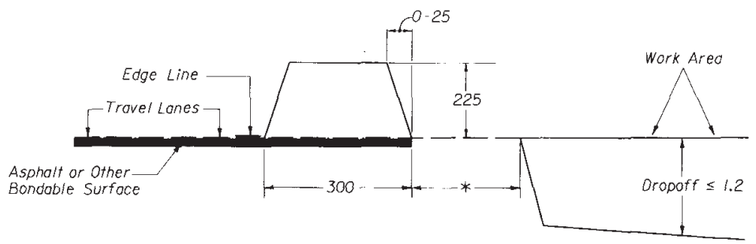

Alternate #1 is a temporary curb (Asphalt or Concrete) which should provide necessary channelization capabilities to protect a low speed motorist from a dropoff condition.

ALT. #1 (NARROW CURB)

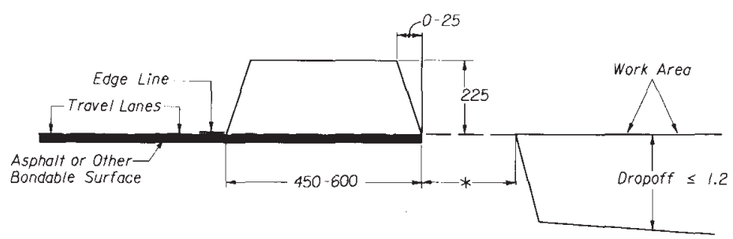

Alternate #2 is a wide temporary curb (Asphalt or Concrete) which should provide somewhat greater visibility/awareness of the barrier curb.

ALT. # 2 (WIDE CURB)

* 300 millimeters (or more) is desirable in order to enhance/improve stability. However it is recognized that there may be cases where 300 millimeters (or more) is not feasible or obtainable. In these instances, engineering judgement must be used to balance this offset distance with the depth of dropoff, soil type and etc.

TEMPORARY CURB

1. Application: Temporary curb shall not be used on facilities with posted speeds greater than 45 mph and dropoffs greater than 1.2 meters deep. It shall not be used on interstate or limited access facilities.

2. Vertical panels, tubular markers or barricades shall also be used to delineate the work area. These devices could be placed on top of the temporary curb or on the outside (between the curb and the dropoff).

3. Edgelines shall be provided, as well as, painting the face of the curb (white or yellow as appropriate) to further delineate it's presence. The paint shall be in accordance with the traffic striping specifications, including reflective beads.

4. The temporary curb is to be bonded to the existing surface by use of a tack coat, or other methods approved by the engineer. It is important that the curb adhere to the base material in order to provide the strength necessary to redirect errant vehicles.

5. Temporary curb is to be paid for under Lump Sum Maintenance of Traffic (Item 102-1). The designer should include a pay item note to state this fact and to include the estimated number of meters to be used. Payment for the curb is to include all materials and work necessary to construct. (including painting of the curb), maintain and remove the temporary curb. Traffic striping (lane lines only) and warning devices are to be paid for separately. Any damage to existing pavement caused by the removal of existing curb shall be satisfactorily repaired and the cost of such repairs are to be included in the cost of the temporary curb .

6. The temporary curb is to be constructed of miscellaneous asphalt or class I concrete. The type of material (asphalt or concrete) is up to the contractor, unless otherwise noted by the engineer.

7. The designer must specify, in the plans , which alternate is to be used- alternate 1 or 2. The choice is strictly up to the designer. At this time, there is no preference or guidelines on the use of one versus the other. However, the designer should consider speed, volume, offset space available, dropoff depth, etc. Obviously, increasing the offset between the travel lane and the dropoff will increase safety.

8. If concrete is used to construct the temporary curb, joints must be made every 3.0 meters in order to control cracking.

9. The designer must also consider drainage needs when using temporary curb. If driveways or other accesses are not frequent enough to allow for water runoff, the designer may need to specify the need for "drainage slots" at an appropriate spacing based on grades, number of lanes , etc. Typically, a drainage slot should be 300 millimeters wide (a break in the curb) at 15.0 meter spacings.

10. At openings such as driveways and business accesses, the temporary curb should be transitioned in height from 100 millimeters up to 225 millimeters at a 1: 4 slope in order to eliminate a potential hazard at the end points.

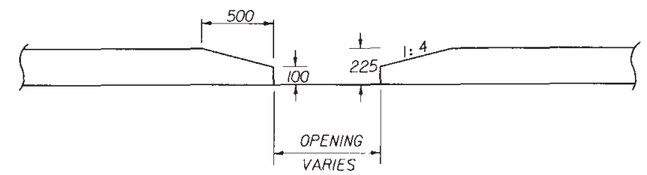

LONGITUDINAL SECTION

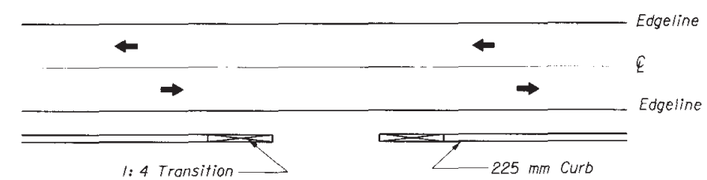

PLAN VIEW

TEMPORARY CURB OPENINGS

STATE OF FLORIDA DEPARTMENT OF TRANSPORTATION
ROAD DESIGN

TRAFFIC CONTROL THROUGH WORK ZONES

GENERAL INFORMATION FOR
TRAFFIC CONTROL THROUGH WORK ZONES

	Names	Dates
Designed By		
Drawn By		
Checked By		
F.H.W.A. Approved:		

Approved By: Charles A. Scott
State Traffic Plans Engineer

Revision No.	Sheet No.	Index No.
94	6 of 10	600

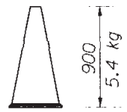

FOR NIGHT USE
SEE NOTE 9.

CONES

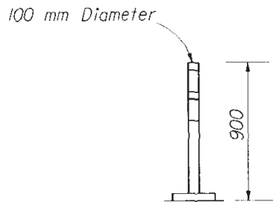

TUBULAR NON-FIXED MARKER TO BE USED DURING DAYLIGHT ONLY EXCEPT WHEN USED IN CONJUNCTION WITH TEMPORARY CURB.

TUBULAR MARKER

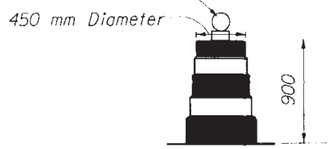

STEEL DRUMS
NOT PERMITTED

PLASTIC DRUMS

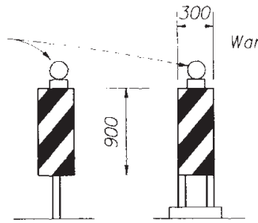

POST MOUNT

VERTICAL PANEL

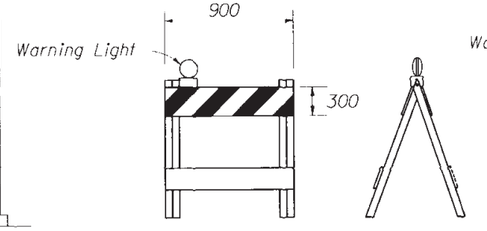

A-FRAME

TYPE I BARRICADE

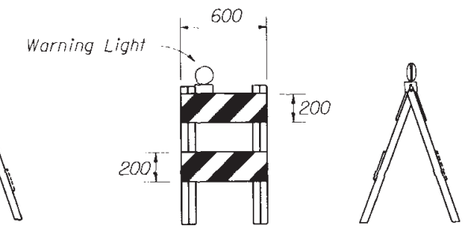

TYPE II BARRICADE

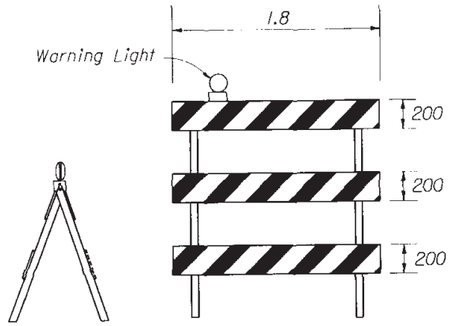

TYPE III BARRICADE

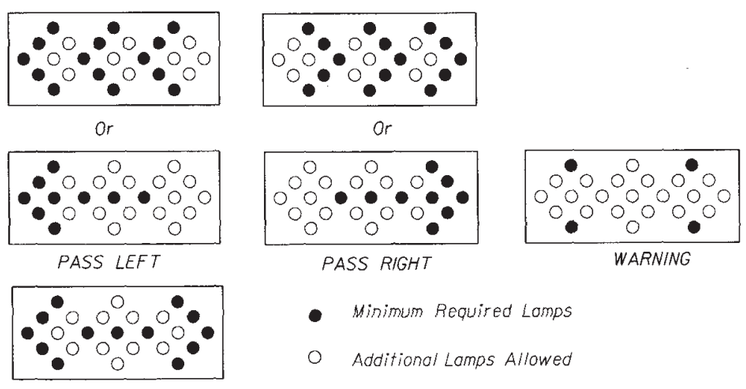

ADVANCE WARNING ARROW PANELS
MODES

CHANNELIZING AND LIGHTING DEVICE NOTES

1. Only approved traffic control devices may be used.
2. The FDOT approval number shall be engraved on the device at a convenient and readily visible location. Where engraving is not practical a water-resistant type label may be used.
3. The details shown on this sheet are for the following purposes: (a) For ease of identification and (b) To provide information that supplements or supercedes that provided by the MUTCD.
4. The Type III Barricade shall have a unit length of 1.8 meters only. When barricades of greater lengths are required those lengths shall be in multiples of the 1.8 meter unit. Signs used in conjunction with Type III Barricades shall be mounted above the Barricade and shall not block the reflective area of the Barricade.
5. During hours of darkness, warning lights shall be used on drums, vertical panels, Type I, Type II or Type III barricades.
6. Ballast shall not be placed on top rails or any striped rails or higher than 325 millimeters above the driving surface.
7. For rails less than 900 millimeters long, 100 millimeter stripes shall be used.
8. When Advance Warning Arrow Panels are used at night, the intensity of the flashers shall be reduced during darkness when lower intensities are desirable.
9. When used at night, cones shall:
   1. Be used only in active work zones, such as milling and resurfacing or other moving operations where cones can be monitored.
   2. Be reflectorized as per the MUTCD.
   3. Be used only with Department approved reflective collars.

CHANNELIZING AND LIGHTING DEVICES

STATE OF FLORIDA DEPARTMENT OF TRANSPORTATION
ROAD DESIGN

TRAFFIC CONTROL THROUGH WORK ZONES
GENERAL INFORMATION FOR
TRAFFIC CONTROL THROUGH WORK ZONES

	Names	Dates
Designed By		12/87
Drawn By		12/87
Checked By		12/87

F.H.W.A. Approved:

Approved By Charles A. Scott
State Traffic Plans Engineer

Revision No.	Sheet No.	Index No.
94	7 of 10	600

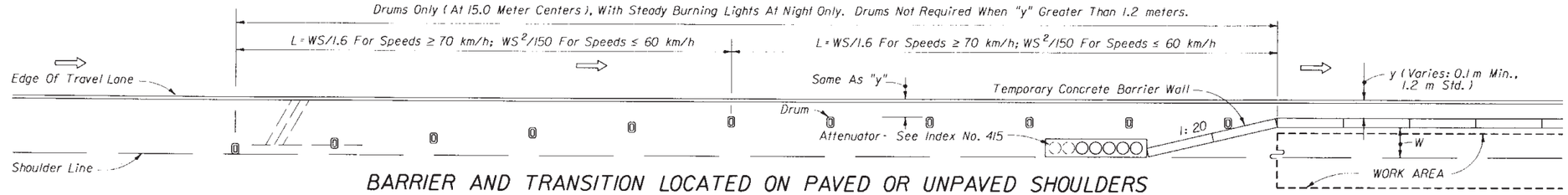

BARRIER AND TRANSITION LOCATED ON PAVED OR UNPAVED SHOULDERS
PLAN SHOWN FOR RIGHT LANE - INVERTED PLAN FOR LEFT LANE

English to Metric Speed Conversion	
MPH	km/h
65	110
60	100
55	90
50	80
45	70
40	60
35	60
30	50

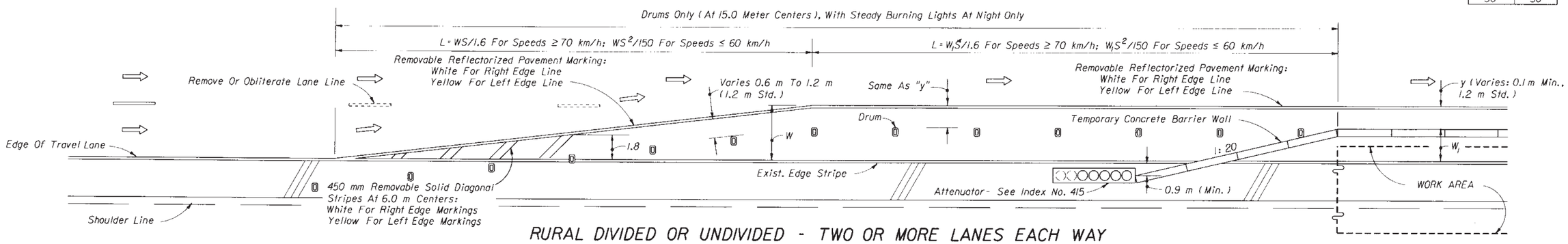

RURAL DIVIDED OR UNDIVIDED - TWO OR MORE LANES EACH WAY
LANE DROP • PLAN SHOWN FOR RIGHT LANE MERGE LEFT - INVERTED PLAN FOR LEFT LANE MERGE RIGHT

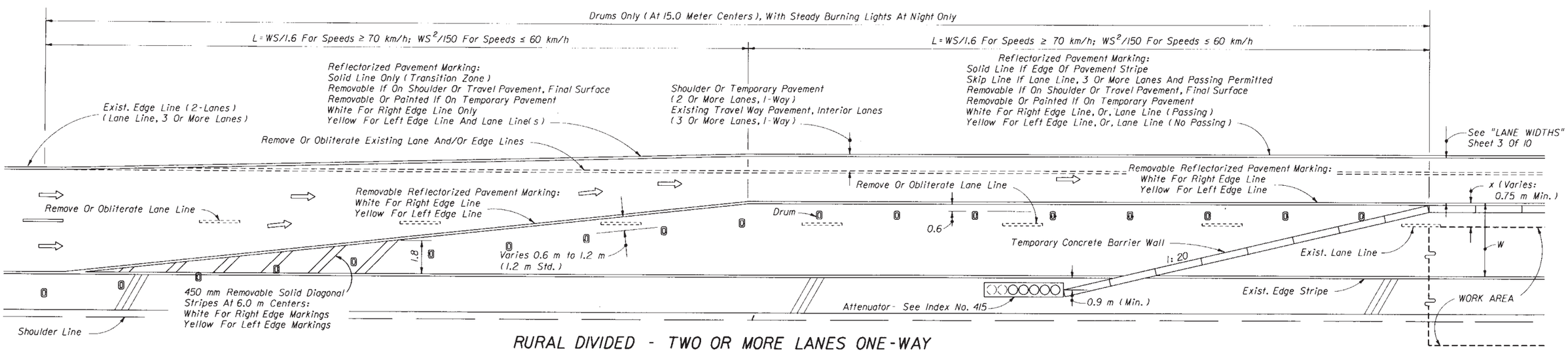

RURAL DIVIDED - TWO OR MORE LANES ONE-WAY
LANE DROP AND LANE SHIFTS - PLAN SHOWN FOR RIGHT LANE MERGE LEFT - INVERTED PLAN FOR LEFT LANE MERGE RIGHT

TRANSITION NOTES

1. Barrier wall within the transition areas shall have reflective markers mounted on the travel side of the wall, 150 millimeters below the top and on 3.6 meter centers.
2. Arrows denote direction of traffic only and do not reflect pavement markings.
3. For signing information see the Plans, Specifications, MUTCD and other TCZ Standards.

TRANSITIONS FOR TEMPORARY CONCRETE BARRIER WALL ON RURAL FACILITIES

STATE OF FLORIDA DEPARTMENT OF TRANSPORTATION
ROAD DESIGN

TRAFFIC CONTROL THROUGH WORK ZONES

GENERAL INFORMATION FOR
TRAFFIC CONTROL THROUGH WORK ZONES

	Names	Dates
Designed By		4/89
Drawn By		4/89
Checked By		4/89
F.H.W.A. Approved:		

Approved By Clark A. Scott
State Traffic Plans Engineer

Revision No.	Sheet No.	Index No.
94	8 of 10	600

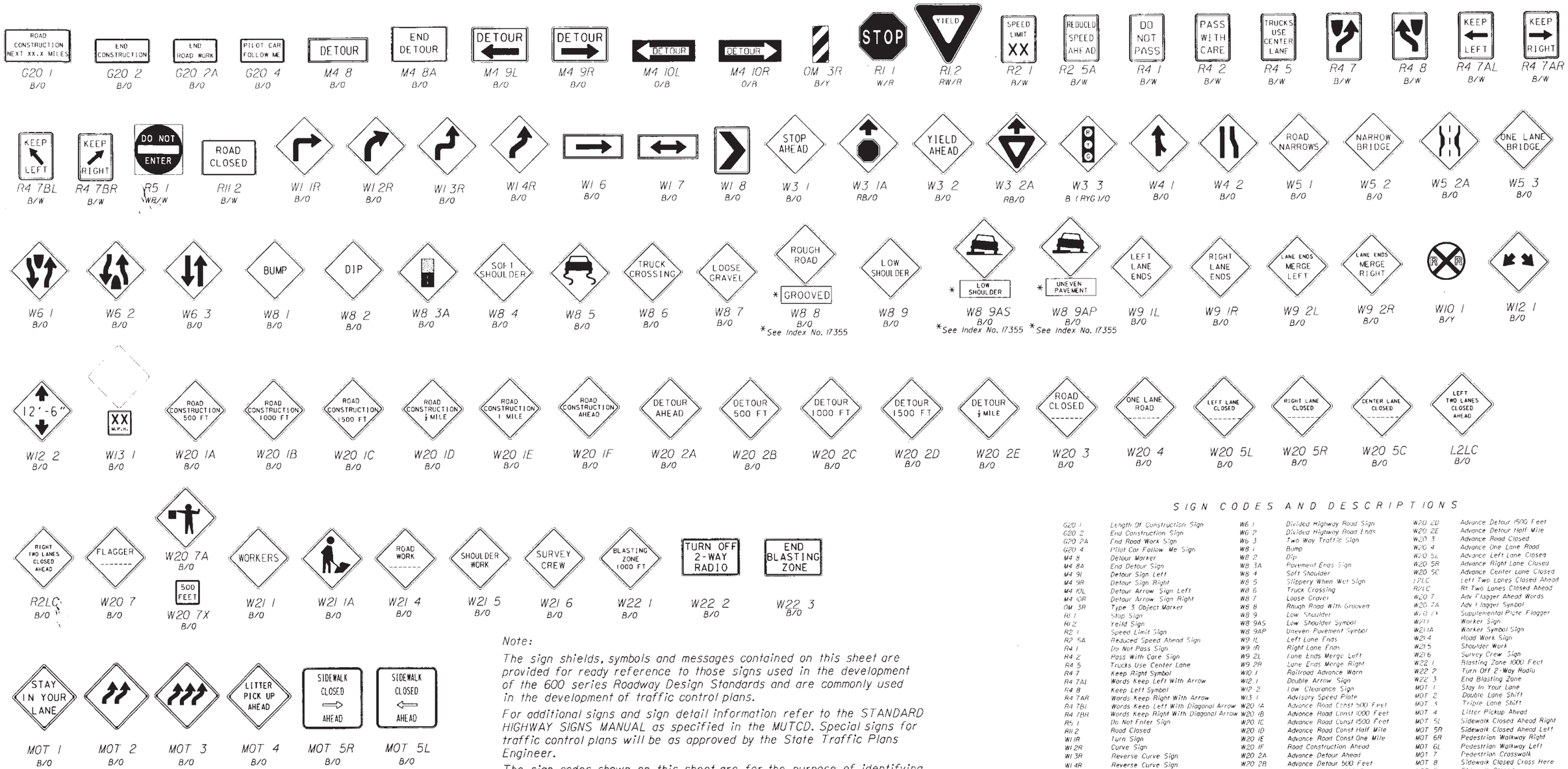

Note:

The sign shields, symbols and messages contained on this sheet are provided for ready reference to those signs used in the development of the 600 series Roadway Design Standards and are commonly used in the development of traffic control plans.

For additional signs and sign detail information refer to the STANDARD HIGHWAY SIGNS MANUAL as specified in the MUTCD. Special signs for traffic control plans will be as approved by the State Traffic Plans Engineer.

The sign codes shown on this sheet are for the purpose of identifying cell names found in the Traffic Control Cell Library (TCZ.Cel) on the CADD system. The STANDARD HIGHWAY SIGNS MANUAL should be referenced for the official sign codes for use in the development of traffic control plans. See Index No. 17355 for MOT sign details.

COLOR CODES

Legend and/or Symbol / Background

O-Orange (Reflectorized) R-Red (Reflectorized)
B-Black (Non-Reflectorized) Y-Yellow (Reflectorized)
W-White (Reflectorized) G-Green (Reflectorized)

SIGN CODES AND DESCRIPTIONS

G20 1	Length Of Construction Sign	W6 1	Divided Highway Road Sign	W20 2D	Advance Detour 1500 Feet
G20 2	End Construction Sign	W6 2	Divided Highway Road Ends	W20 2E	Advance Detour Half Mile
G20 2A	End Road Work Sign	W6 3	Two Way Traffic Sign	W20 3	Advance Road Closed
G20 4	Pilot Car Follow Me Sign	W8 1	Bump	W20 4	Advance One Lane Road
M4 8	Detour Marker	W8 2	Dip	W20 5L	Advance Left Lane Closed
M4 8A	End Detour Sign	W8 3A	Pavement Ends Sign	W20 5R	Advance Right Lane Closed
M4 9L	Detour Sign Left	W8 4	Soft Shoulder	W20 5C	Advance Center Lane Closed
M4 9R	Detour Sign Right	W8 5	Slippery When Wet Sign	L2LC	Left Two Lanes Closed Ahead
M4 10L	Detour Arrow Sign Left	W8 6	Truck Crossing	R2LC	Rt Two Lanes Closed Ahead
M4 10R	Detour Arrow Sign Right	W8 7	Loose Gravel	W20 7	Adv Flagger Ahead Words
OM 3R	Type 3 Object Marker	W8 8	Rough Road With Grooved	W20 7A	Adv Flagger Symbol
R1 1	Stop Sign	W8 9	Low Shoulder	W20 7X	Supplemental Plate Flagger
R1 2	Yeild Sign	W8 9AS	Low Shoulder Symbol	W21 1	Worker Sign
R2 1	Speed Limit Sign	W8 9AP	Uneven Pavement Symbol	W21 1A	Worker Symbol Sign
R2 5A	Reduced Speed Ahead Sign	W9 1L	Left Lane Ends	W21 4	Road Work Sign
R4 1	Do Not Pass Sign	W9 1R	Right Lane Ends	W21 5	Shoulder Work
R4 2	Pass With Care Sign	W9 2L	Lane Ends Merge Left	W21 6	Survey Crew Sign
R4 5	Trucks Use Center Lane	W9 2R	Lane Ends Merge Right	W22 1	Blasting Zone 1000 Feet
R4 7	Keep Right Symbol	W10 1	Railroad Advance Warn	W22 2	Turn Off 2-Way Radio
R4 7AL	Words Keep Left With Arrow	W12 1	Double Arrow Sign	W22 3	End Blasting Zone
R4 8	Keep Left Symbol	W12 2	Low Clearance Sign	MOT 1	Stay In Your Lane
R4 7AR	Words Keep Right With Arrow	W13 1	Advisory Speed Plate	MOT 2	Double Lane Shift
R4 7BL	Words Keep Left With Diagonal Arrow	W20 1A	Advance Road Const 500 Feet	MOT 3	Triple Lane Shift
R4 7BR	Words Keep Right With Diagonal Arrow	W20 1B	Advance Road Const 1000 Feet	MOT 4	Litter Pickup Ahead
R5 1	Do Not Enter Sign	W20 1C	Advance Road Const 1500 Feet	MOT 5L	Sidewalk Closed Ahead Right
R11 2	Road Closed	W20 1D	Advance Road Const Half Mile	MOT 5R	Sidewalk Closed Ahead Left
W1 1R	Turn Sign	W20 1E	Advance Road Const One Mile	MOT 6R	Pedestrian Walkway Right
W1 2R	Curve Sign	W20 1F	Road Construction Ahead	MOT 6L	Pedestrian Walkway Left
W1 3R	Reverse Curve Sign	W20 2A	Advance Detour Ahead	MOT 7	Pedestrian Crosswalk
W1 4R	Reverse Curve Sign	W20 2B	Advance Detour 500 Feet	MOT 8	Sidewalk Closed Cross Here
W1 6	Large Arrow Sign Single	W20 2C	Advance Detour 1000 Feet	MOT 9	Sidewalk Closed
W1 7	Large Arrow Sign Double			MOT 10	Lighted Construction Zone Ahead
W1 8	Chevron Alignment Sign				
W3 1	Stop Ahead Word Message				
W3 1A	Stop Ahead Symbol				
W3 2	Yield Ahead Word Message				
W3 2A	Yield Ahead Symbol				
W3 3	Signal Ahead Symbol				
W4 1	Merge Sign				
W4 2	Lane Reduction Transition				
W5 1	A Road Narrows Sign				
W5 2	Narrow Bridge Words				
W5 2A	Narrow Bridge Symbol				
W5 3	One Lane Bridge				

COMMONLY USED WARNING AND REGULATORY SIGNS IN WORK ZONES

STATE OF FLORIDA DEPARTMENT OF TRANSPORTATION
ROAD DESIGN

TRAFFIC CONTROL THROUGH WORK ZONES

GENERAL INFORMATION FOR
TRAFFIC CONTROL THROUGH WORK ZONES

	Names	Dates
Designed By		
Drawn By		12/87
Checked By		12/87

Approved By: Clark A. Scott
State Traffic Plans Engineer

F.H.W.A. Approved:

Revision No.	Sheet No.	Index No.
94	9 of 10	600

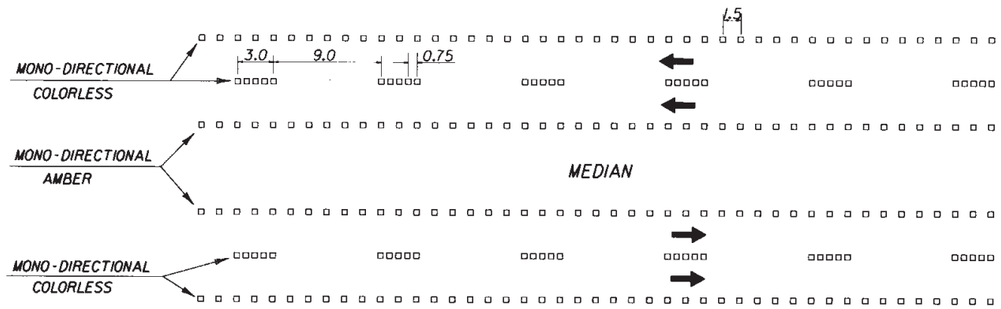

4-LANE DIVIDED

2-LANE NO PASSING

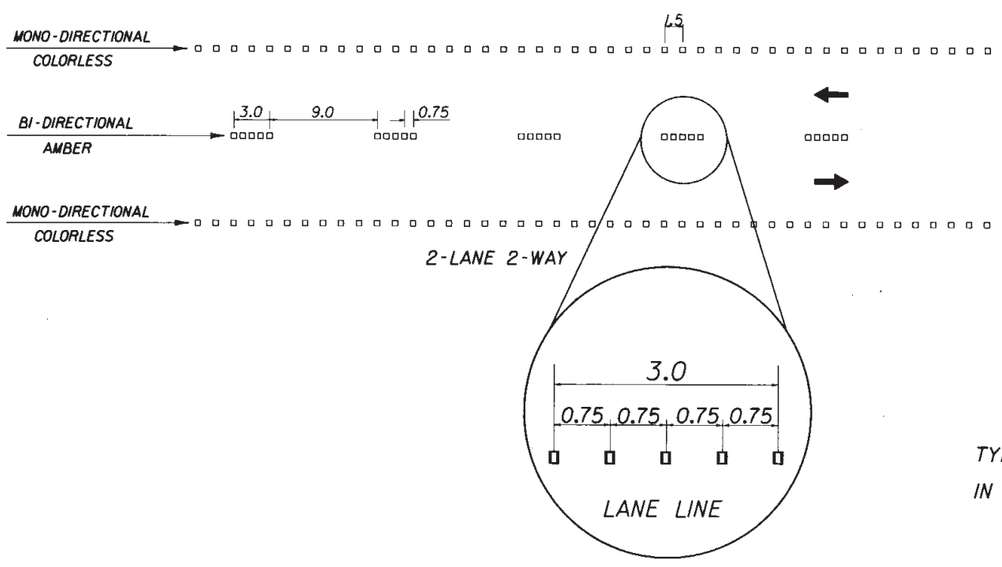

2-LANE 2-WAY

TYPICAL PLACEMENT OF REFLECTIVE PAVEMENT MARKERS
IN LIEU OF TEMPORARY TAPE OR PAINT IN WORK ZONES

REFLECTIVE PAVEMENT MARKERS

CLASS	APPLICATION
A	Permanent Applications In Non-Traffic Areas Or Can Be Used In Work Zone Applications For Traffic And Non-Traffic Areas.
B	Permanent Application In Traffic And Non-Traffic Areas Or Can Be Used In Work Zone Applications For Traffic And Non-Traffic Areas.
D	Work Zone Application Only, For Traffic And Non-Traffic Areas. Maximum spacing 1.5 meters center to center.
E	Temporary Work Zone Application Only, Not Exceeding Five (5) Continuous Days, For Traffic And Non-Traffic Areas. Maximum spacing 1.5 meters center to center.

NOTES

1. For spacing of CLASS A or B RPM'S to supplement Temporary Tape or Paint, see Index No. 600 sheet 3 of 10.

2. Basic color rule: colorless reflectors replace white lines and amber reflectors replace yellow lines.

3. In work zones, CLASS A,B, or D RPM'S may be used to form lane lines edge lines and temporary gore areas, in lieu of tape or paint however, tape or paint must be used in all transition areas in addition to the RPMs. In short term work zones, where the RPM'S will be used for five (5) days or less, CLASS "E" RPM'S may be used to form lane or edge lines.

4. To provide contrast on Concrete Pavement, and light Asphalt the five (5) colorless RPM'S shall be followed by five Black RPM'S . The spacing between RPM'S shall be 0.75 meters. Black RPM'S will not be required for contrast with Amber RPM'S.

STATE OF FLORIDA DEPARTMENT OF TRANSPORTATION
ROAD DESIGN

TRAFFIC CONTROL THROUGH WORK ZONES

GENERAL INFORMATION FOR
TRAFFIC CONTROL THROUGH WORK ZONES

	Names	Dates	Approved By Chris A Scott, State Traffic Plans Engineer		
Designed By					
Drawn By					
Checked By			Revision No.	Sheet No.	Index No.
F.H.W.A. Approved:			94	10 of 10	600

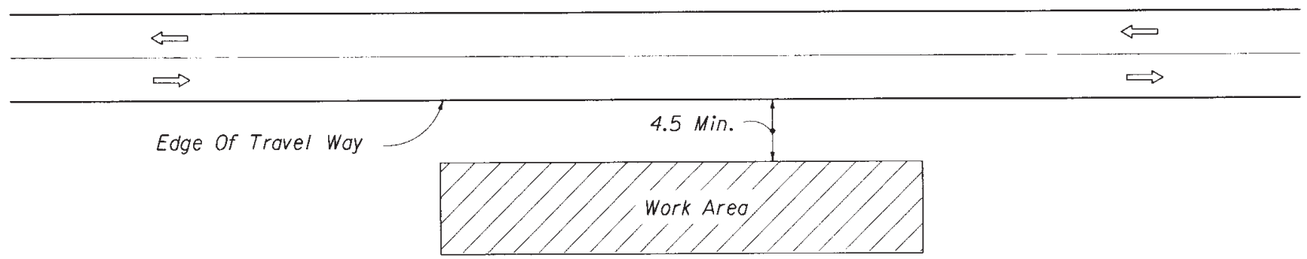

GENERAL NOTES

1. If the work operation requires that two or more work vehicles cross the 4.5 m zone in any one hour, traffic control will be in conformance with Index No. 602.
2. No special signing is required.
3. Arrows denote direction of traffic only and do not reflect pavement markings.
4. When a side road intersects the highway on which work is being performed additional traffic control devices shall be erected in accordance with other applicable TCZ Indexes.
5. For general TCZ requirements and additional information refer to Index No. 600.

TYPICAL APPLICATIONS

Landscaping Work
Utility Work
Fencing Work
Cleaning Drainage Structures
Reworking Ditches

SYMBOLS

Work Area

CONDITIONS

WHERE ANY VEHICLE, EQUIPMENT, WORKERS AND THEIR ACTIVITIES ARE MORE THAN 4.5 m FROM THE EDGE OF PAVEMENT

STATE OF FLORIDA DEPARTMENT OF TRANSPORTATION
ROAD DESIGN

TRAFFIC CONTROL THROUGH WORK ZONES

TWO-LANE, TWO-WAY • RURAL DAY OR NIGHT OPERATIONS

	Names	Dates
Designed By		12/87
Drawn By		12/87
Checked By		12/87

Approved By Clark A. Scott
Deputy State Design Engineer, Roadways

Revision No.	Sheet No.	Index No.
94	1 of 1	601

F.H.W.A. Approved:

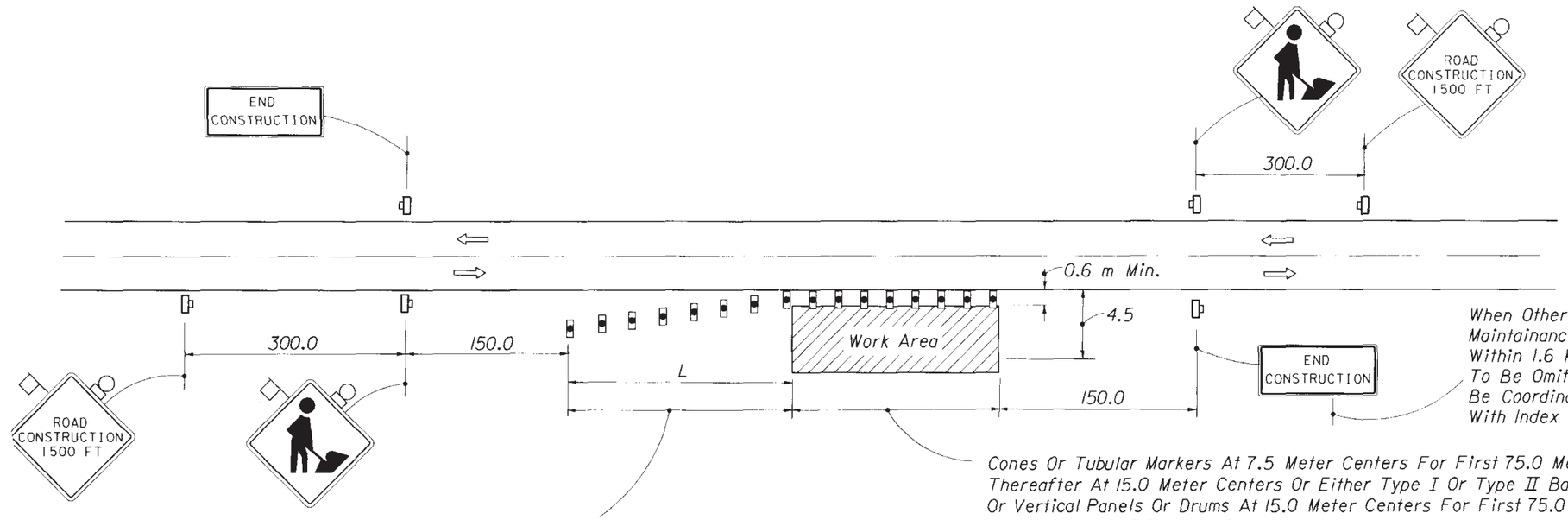

When Other Construction Or Maintainance Operations Occur Within 1.6 kilometers, Sign(s) To Be Omitted And Signing To Be Coordinated In Accordance With Index No. 600.

Cones Or Tubular Markers At 7.5 Meter Centers For First 75.0 Meters Thereafter At 15.0 Meter Centers Or Either Type I Or Type II Barricades Or Vertical Panels Or Drums At 15.0 Meter Centers For First 75.0 Meters Thereafter At 30.0 Meter Centers.

Maximum spacing between cones and tubular markers shall be 7.5 m. Maximum spacing between Type I or Type II barricades or vertical panels or drums shall be based on the speed limit as follows: 5.0 m up to 25 MPH; 10.0 m for 30 MPH - 40 MPH; 15.0 m for 45 MPH and greater.

English to Metric Speed Conversion	
MPH	km/h
65	110
60	100
55	90
50	80
45	70
40	60
35	60
30	50

SYMBOLS

Work Area

Sign With 450 mm x 450 mm (Min.) Orange Flag And Type B Light

Type I Or Type II Barricade Or Vertical Panel Or Drum (With Steady Burning Light At Night Only). Tubular Markers May Be Used During Daylight Only. Cones May Be Used During Daylight And As Permitted At Night.

Work Zone Sign

GENERAL NOTES

1. All vehicles, equipment, workers (except flaggers) and their activities are restricted at all times to one side of the roadway.
2. If the work operation does not exceed 60 minutes, traffic control will be in conformance with Index No. 607.
3. If the work operation encroaches on the through traffic lanes or when four or more work vehicles enter the through traffic lanes in a one hour period a flagger shall be provided and the advanced FLAGGER sign shall be substituted for the WORKERS sign. For location of flaggers and FLAGGER signs see Index No. 603.
4. The first two warning signs shall have a 450 mm x 450 mm (min.) orange flag and a Type B light attached and operating at all times.

   Mesh signs may be used for (Daylight Only) operations Type B Lights and Orange Flags are not required.
5. The WORKERS legend sign may be substituted for the symbol sign.
6. All signs shall be post mounted if the closure time exceeds 12 hours.
7. $L\ (min) = \frac{WS}{3.2}$ for speeds ≥ 70 km/h

   $= \frac{WS^2}{300}$ for speeds ≤ 60 km/h

   Where:
   W = Width of shoulder in meters, 2.4 m minimum.
   S = Posted speed limit (converted to km/h).
8. Arrows denote direction of traffic only and do not reflect pavement markings.
9. Longitudinal dimensions are to be adjusted to fit field conditions. See Index No. 600.
10. WORKERS sign to be removed or fully covered when no work is being performed.
11. END CONSTRUCTION signs required only when work exceeds one daylight period.
12. When a side road intersects the highway on which work is being performed additional traffic control devices shall be erected in accordance with other applicable TCZ Indexes.
13. For general TCZ requirements and additional information refer to Index No. 600.

TYPICAL APPLICATIONS

Utility Work
Culvert Extensions
Side Slope Work
Guardrail Work
Landscaping Work
Cleaning Drainage Structures
Reworking Ditches
Sign Installation And Maintenance
Shoulder Repair

CONDITIONS

WHERE ANY VEHICLE, EQUIPMENT, WORKERS OR THEIR ACTIVITIES ENCROACH THE AREA CLOSER THAN 4.5 m BUT NOT CLOSER THAN 0.6 m TO THE EDGE OF PAVEMENT

STATE OF FLORIDA DEPARTMENT OF TRANSPORTATION
ROAD DESIGN

TRAFFIC CONTROL THROUGH WORK ZONES

TWO-LANE, TWO-WAY • RURAL DAY OR NIGHT OPERATIONS

	Names	Dates
Designed By		12/87
Drawn By		12/87
Checked By		12/87

Approved By: State Traffic Plans Engineer

Revision No.	Sheet No.	Index No.
94	1 of 1	602

F.H.W.A. Approved:

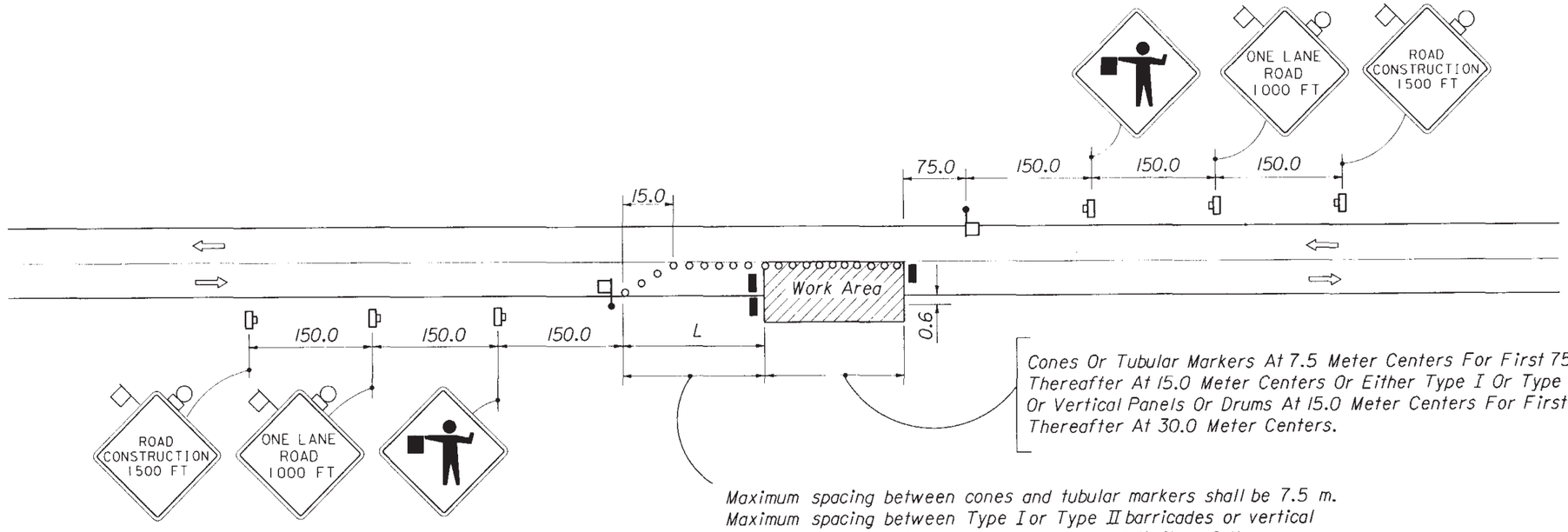

English to Metric Speed Conversion	
MPH	km/h
65	110
60	100
55	90
50	80
45	70
40	60
35	60
30	50

SYMBOLS

- Work Area
- Sign With 450 mm x 450 mm (Min.) Orange Flag And Type B Light
- Type I, Type II Or Type III Barricade Or Vertical Panel Or Drum
- Type I Or Type II Barricade Or Vertical Panel Or Cone Or Tubular Marker Or Drum
- Work Zone Sign
- Flagger

GENERAL NOTES

1. Work operations shall be confined to one traffic lane, leaving the opposite lane open to traffic.
2. All vehicles, equipment, workers (except flaggers), and their activities are restricted at all times to one side of the pavement.
3. If the work operation does not exceed 60 minutes, traffic control will be in conformance with Index No. 607.
4. Additional one-way control may be effected by the following means:
   (1) Flag-carrying vehicle (2) Official vehicle
   (3) Pilot vehicles (4) Traffic signals

   When flaggers are the sole means of one-way control the flaggers shall be in sight of each other or in direct communication at all times.
5. The first two warning signs shall have a 450 mm x 450 mm (min.) orange flag and a Type B light attached and operating at all times.
6. Mesh signs may be used for (Daylight Only) operations. Type B Lights and Orange Flags are not required.
7. The FLAGGER legend sign may be substituted for the symbol sign.
8. $L\ (min) = \frac{WS}{3.2}$ for speeds ≥ 70 km/h

   $= \frac{WS^2}{300}$ for speeds ≤ 60 km/h

   Where:
   W = Width of lateral transition in meters.
   S = Posted speed limit (converted to km/h).
9. The ONE-LANE ROAD signs are to be fully covered and the FLAGGER signs either removed or fully covered when no work is being performed and the highway is open to two-way traffic.
10. Arrows denote direction of traffic only and do not reflect pavement markings.
11. Longitudinal dimensions are to be adjusted to fit field conditions. See Index No. 600.
12. When a side road intersects the highway on which work is being performed additional traffic control devices shall be erected in accordance with other applicable TCZ Indexes.
13. For general TCZ requirements and additional information, refer to Index No. 600.

TYPICAL APPLICATIONS

Pavement Resurfacing
Pavement Repair
Utility Work
Bridge Repair
Guardrail Work

CONDITIONS

WHERE ANY VEHICLE, EQUIPMENT, WORKERS OR THEIR ACTIVITIES ENCROACH THE AREA BETWEEN THE CENTERLINE AND A LINE 0.6 m OUTSIDE THE EDGE OF PAVEMENT

STATE OF FLORIDA DEPARTMENT OF TRANSPORTATION
ROAD DESIGN

TRAFFIC CONTROL THROUGH WORK ZONES

TWO-LANE, TWO-WAY • RURAL OPERATIONS ONE DAYLIGHT PERIOD OR LESS

	Names	Dates	Approved By Charles A. Scott, State Traffic Plans Engineer
Designed By		12/87	
Drawn By		12/87	
Checked By		12/87	
F.H.W.A. Approved:			Revision No. 94 / Sheet No. 1 of 1 / Index No. 603

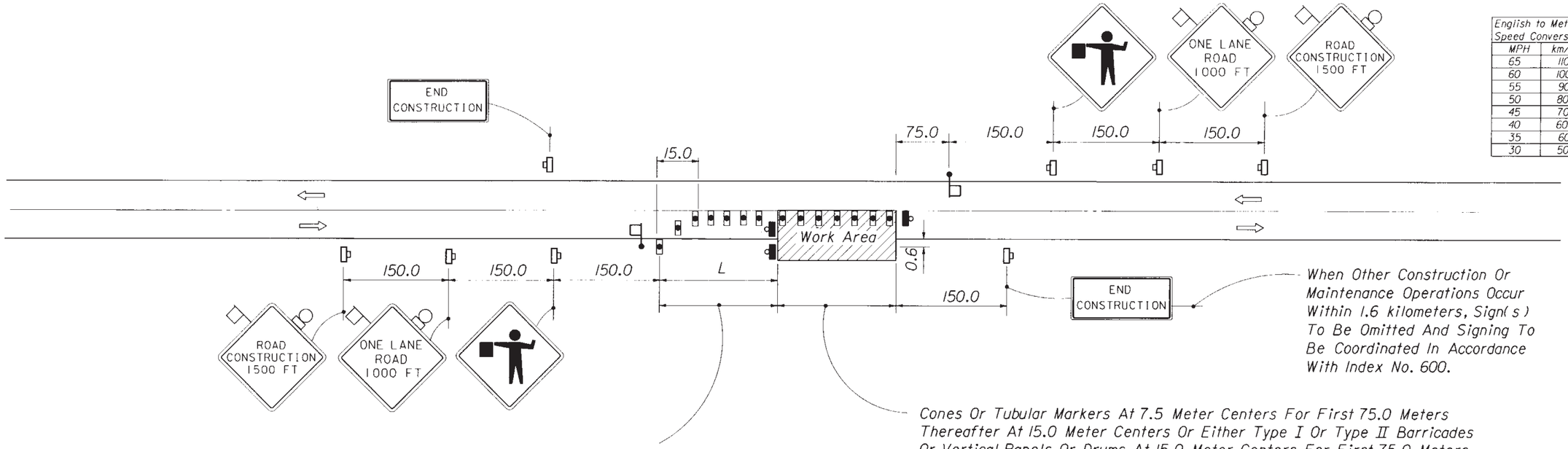

When Other Construction Or Maintenance Operations Occur Within 1.6 kilometers, Sign(s) To Be Omitted And Signing To Be Coordinated In Accordance With Index No. 600.

Cones Or Tubular Markers At 7.5 Meter Centers For First 75.0 Meters Thereafter At 15.0 Meter Centers Or Either Type I Or Type II Barricades Or Vertical Panels Or Drums At 15.0 Meter Centers For First 75.0 Meters Thereafter At 30.0 Meter Centers.

Maximum spacing between cones and tubular markers shall be 7.5 m. Maximum spacing between Type I or Type II barricades or vertical panels or drums shall be based on the speed limit as follows: 5.0 m up to 25 MPH; 10.0 m for 30 MPH - 40 MPH; 15.0 m for 45 MPH and greater.

English to Metric Speed Conversion	
MPH	km/h
65	110
60	100
55	90
50	80
45	70
40	60
35	60
30	50

SYMBOLS

- Work Area
- Sign With 450 mm x 450 mm (Min.) Orange Flag And Type B Light
- Type I Or Type II Barricade Or Vertical Panel Or Drum (With Steady Burning Light At Night Only). Tubular Markers May Be Used During Daylight Only. Cones May Be Used During Daylight And As Permitted At Night.
- Type I, Type II Or Type III Barricade Or Vertical Panel Or Drum (With Flashing Light)
- Work Zone Sign
- Flagger

GENERAL NOTES

1. Construction operations shall be confined to one traffic lane, leaving the opposite lane open to traffic.
2. All vehicles, equipment, workers, (except flaggers) and their activities are restricted at all times to one side of the pavement.
3. Additional one-way control may be effected by the following means:
   (1) Flag-carrying vehicle (2) Official vehicle
   (3) Pilot vehicles (4) Traffic signals

   When flaggers are the sole means of one-way control the flaggers shall be in sight of each other or in direct communication at all times.
4. The first two warning signs shall have a 450 mm x 450 mm (min.) orange flag and a Type B light attached and operating at all times.
5. The FLAGGER legend sign may be substituted for the symbol sign.
6. All signs shall be post mounted if the closure time exceeds 12 hours.
7. $L\ (min) = \frac{WS}{3.2}$ for speeds ≥ 70 km/h
   $= \frac{WS^2}{300}$ for speeds ≤ 60 km/h

   Where:
   W = Width of lateral transition in meters.
   S = Posted speed limit (converted to km/h).
8. The ONE-LANE ROAD signs are to be fully covered and the FLAGGER signs either removed or fully covered when no work is being performed and the highway is open to two-way traffic.
9. Arrows denote direction of traffic only and do not reflect pavement markings.
10. Longitudinal dimensions are to be adjusted to fit field conditions. See Index No. 600.
11. When a side road intersects the highway on which work is being performed additional traffic control devices shall be erected in accordance with other applicable TCZ Indexes.
12. For general TCZ requirements and additional information refer to Index No. 600.

TYPICAL APPLICATIONS

Pavement Repair
Culvert Construction
Utility Work
Bridge Repair

CONDITIONS

WHERE ANY VEHICLE, EQUIPMENT WORKERS OR THEIR ACTIVITIES ENCROACH THE AREA BETWEEN THE CENTERLINE AND A LINE 0.6 m OUTSIDE THE EDGE OF PAVEMENT

STATE OF FLORIDA DEPARTMENT OF TRANSPORTATION
ROAD DESIGN

TRAFFIC CONTROL THROUGH WORK ZONES
TWO-LANE, TWO-WAY • RURAL NIGHT OPERATIONS OR OPERATIONS EXCEEDING ONE DAYLIGHT PERIOD

	Names	Dates	Approved By Clark A Scott, State Traffic Plans Engineer
Designed By		12/87	
Drawn By		12/87	
Checked By		12/87	
F.H.W.A. Approved:			Revision No. 94 / Sheet No. 1 of 1 / Index No. 604

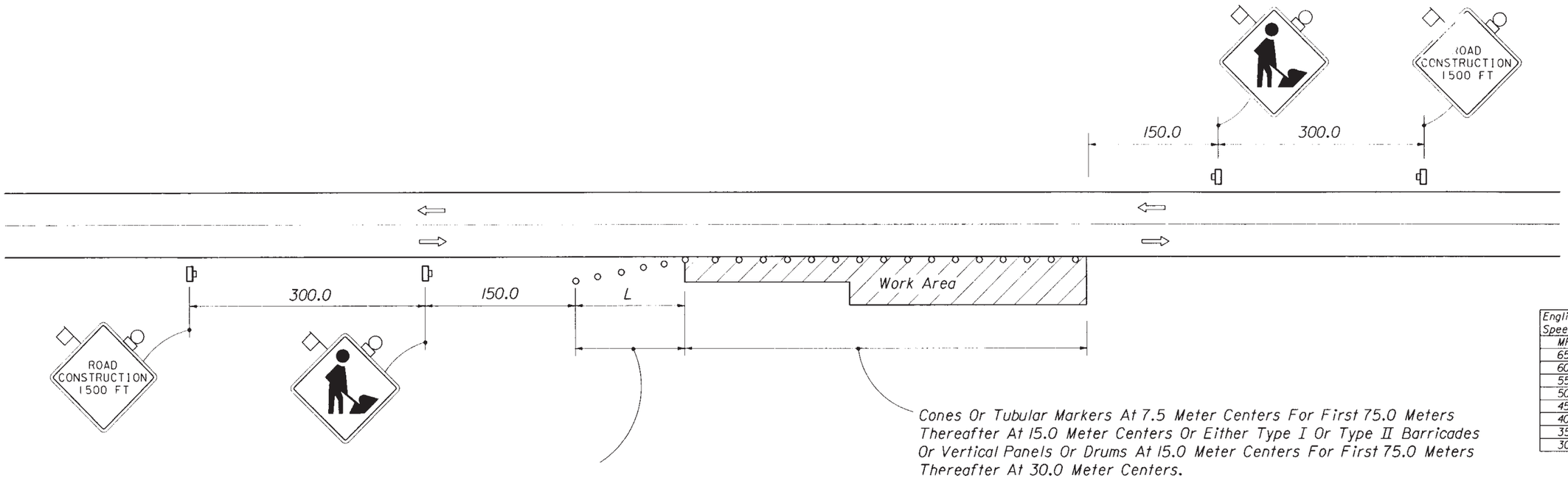

English to Metric Speed Conversion	
MPH	km/h
65	110
60	100
55	90
50	80
45	70
40	60
35	60
30	50

Maximum spacing between cones and tubular markers shall be 7.5 m.
Maximum spacing between Type I or Type II barricades or vertical panels or drums shall be based on the speed limit as follows:
5.0 m up to 25 MPH; 10.0 m for 30 MPH - 40 MPH;
15.0 m for 45 MPH and greater.

TYPICAL APPLICATIONS

Shoulder And Slope Work
Utility Work
Guardrail Work
Landscape Work
Delineator Installation And Maintenance
* Mowing
* Litter Removal

GENERAL NOTES

1. All vehicles, equipment, workers (except flaggers), and their activities are restricted at all times to one side of the roadway.
2. If the work operation does not exceed 60 minutes, traffic control will be in conformance with Index No. 607.
3. If the work operation encroaches on the through traffic lanes or when four or more work vehicles enter the through traffic lanes in a one hour period flaggers shall be provided and the advanced FLAGGER sign shall be substituted for the WORKERS sign. For location of flaggers and FLAGGER signs see Index No. 603.
4. The first two warning signs shall have a 450 mm x 450 mm (min.) orange flag and a Type B light attached and operating at all times.
   Mesh signs may be used for (Daylight Only) operations.
   Type B Lights and Orange Flags are not required.
5. The WORKERS legend sign may be substituted for the symbol sign.

* 6. Where work activities within 0.6 meters of the edge of pavement is incidental (ie. Mowing, Litter Removal) the engineer may delete requirements for cones and signs provided a vehicle with flashing warning lights is present.

7. $L\ (\text{min.}) = \frac{WS}{3.2}$ for speeds ≥ 70 km/h
   $= \frac{WS^2}{300}$ for speeds ≤ 60 km/h

   Where:
   W = Width of shoulder in meters, 2.4 m minimum.
   S = Posted speed limit (converted to km/h).
8. Arrows denote direction of traffic only and do not reflect pavement markings.
9. Longitudinal dimensions are to be adjusted to fit field conditions. See Index No. 600.
10. When a side road intersects the highway on which work is being performed additional traffic control devices shall be erected in accordance with other applicable TCZ Indexes.
11. For general TCZ requirements and additional information, refer to Index No. 600.

SYMBOLS

Work Area

Sign With 450 mm x 450 mm (Min.) Orange Flag And Type B Light

Type I Or Type II Barricade Or Vertical Panel Or Cone Or Tubular Marker Or Drum

Work Zone Sign

CONDITIONS

WHERE ANY VEHICLE, EQUIPMENT, WORKERS OR THEIR ACTIVITIES REQUIRE AN INTERMITTENT OR CONTINUOUS MOVING OPERATION ON THE SHOULDER OR SHOULDER AND SLOPES

STATE OF FLORIDA DEPARTMENT OF TRANSPORTATION
ROAD DESIGN

TRAFFIC CONTROL THROUGH WORK ZONES

TWO-LANE, TWO-WAY • RURAL MOVING OPERATIONS-DAYLIGHT ONLY

	Names	Dates
Designed By		12/87
Drawn By		12/87
Checked By		12/87

Approved By Charles A. Scott
State Traffic Plans Engineer

Revision No.	Sheet No.	Index No.
94	1 of 1	605

F.H.W.A. Approved:

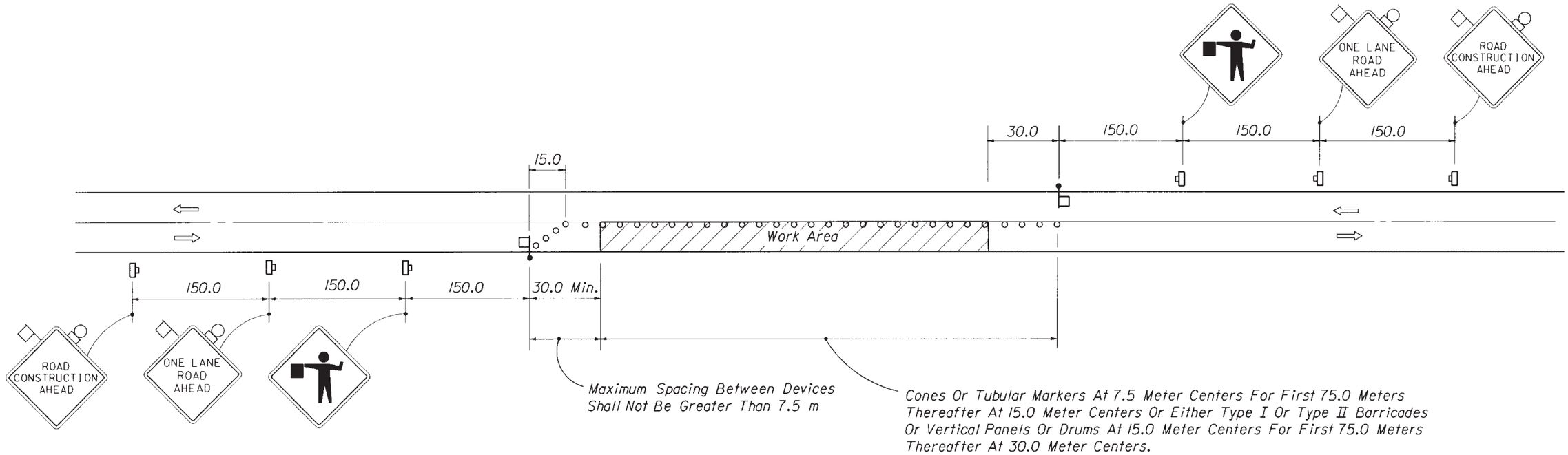

GENERAL NOTES

1. All vehicles, equipment, workers (except flaggers), and their activities are restricted at all times to one side of the pavement.
2. Minimum length of work area is 60.0 meters. Maximum length to be determined by the Engineer, but in no case to exceed the length of one-half ($\frac{1}{2}$) days operation or 3.2 kilometers whichever is less.
3. If the work operation does not exceed 60 minutes, traffic control will be in conformance with Index No. 607.
4. Additional one-way control may be effected by the following means:
   (1) Flag-carrying vehicle (2) Official vehicle
   (3) Pilot vehicles (4) Traffic signals

   When flaggers are the sole means of one-way control the flaggers shall be in sight of each other or in direct communication at all times.
5. The first two warning signs shall have a 450 mm x 450 mm orange flag and a Type B light attached and operating at all times.
6. Mesh signs may be used for (Daylight Only) operations. Type B Lights and Orange Flags are not required.
7. The FLAGGER legend sign may be substituted for the symbol sign.
8. The ONE LANE ROAD AHEAD and FLAGGER signs are to be removed or fully covered when no work is being performed and the highway is open to two-way traffic.
9. Arrows denote direction of traffic only and do not reflect pavement markings.
10. Longitudinal dimensions are to be adjusted to fit field conditions. See Index No. 600.
11. When a side road intersects the highway on which work is being performed additional traffic control devices shall be erected in accordance with other applicable TCZ Indexes.
12. For general TCZ requirements and additional information, refer to Index No. 600.

SYMBOLS

- Work Area
- Sign With 450 mm x 450 mm (Min.) Orange Flag And Type B Light
- Type I Or Type II Barricade Or Vertical Panel Or Cone Or Tubular Marker Or Drum
- Work Zone Sign
- Flagger

TYPICAL APPLICATIONS

Pavement Repair
Pavement Surfacing
Utility Work
Delineator Maintenance
Crack Sealing
Core Boring

CONDITIONS

WHERE ANY VEHICLE, EQUIPMENT, WORKERS OR THEIR ACTIVITIES REQUIRE AN INTERMITTENT OR CONTINUOUS MOVING OPERATION ON THE PAVEMENT WHERE THE AVERAGE SPEED OF MOVEMENT IS LESS THAN 6.4 KILOMETERS PER HOUR

STATE OF FLORIDA DEPARTMENT OF TRANSPORTATION
ROAD DESIGN

TRAFFIC CONTROL THROUGH WORK ZONES

MOVING OPERATIONS • RURAL

TWO-LANE TWO-WAY DAYLIGHT ONLY

	Names	Dates
Designed By		12/87
Drawn By		12/87
Checked By		12/87

Approved By Clark A. Scott
State Traffic Plans Engineer

Revision No.	Sheet No.	Index No.
94	1 of 1	606

F.H.W.A. Approved:

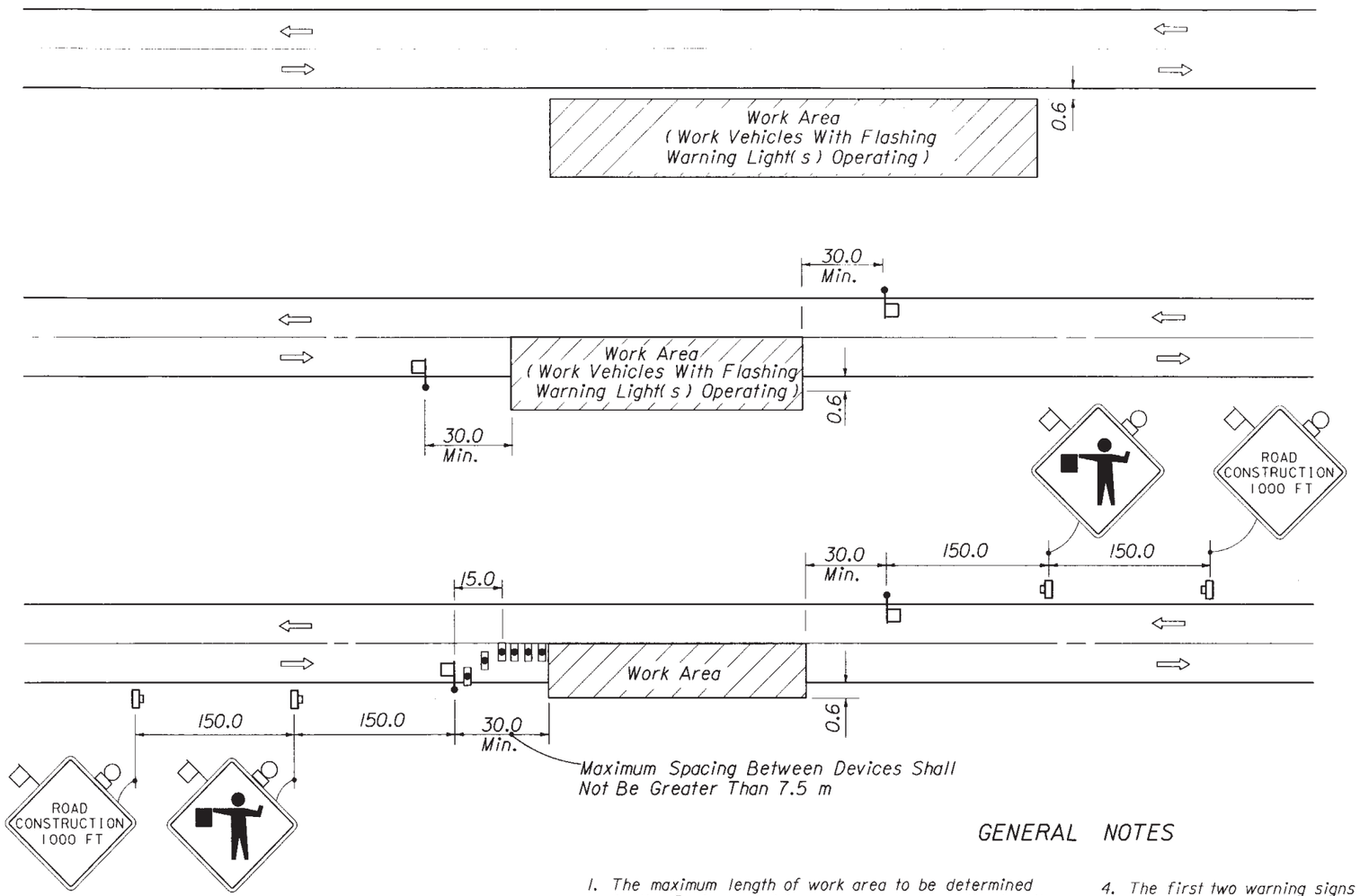

CONDITIONS

FOR ANY OPERATION THAT IS 0.6 m OR MORE OUTSIDE THE EDGE OF THE PAVEMENT FOR A PERIOD OF LESS THAN 60 MINUTES.

CONDITIONS

FOR ANY OPERATION THAT ENCROACHES IN THE AREA BETWEEN THE CENTERLINE AND A LINE 0.6 m OUTSIDE THE EDGE OF THE PAVEMENT FOR A PERIOD OF 15 MINUTES OR LESS

CONDITIONS

FOR ANY OPERATION THAT ENCROACHES IN THE AREA BETWEEN THE CENTERLINE AND A LINE 0.6 m OUTSIDE THE EDGE OF THE PAVEMENT FOR A PERIOD IN EXCESS OF 15 MINUTES BUT LESS THAN 60 MINUTES.

SYMBOLS

- Work Area
- Sign With 450 mm x 450 mm (Min.) Orange Orange Flag And Type B Light
- Type I Or Type II Barricade Or Vertical Panel Or Drum (With Steady Burning Light At Night Only). Tubular Markers May Be Used During Daylight Only. Cones May Be Used During Daylight And As Permitted At Night.
- Work Zone Sign
- Flagger

GENERAL NOTES

1. The maximum length of work area to be determined by the Engineer, but in no case to exceed the length of one-half ($\frac{1}{2}$) days operation or 3.2 kilometers whichever is less.
2. All vehicles, equipment, workers (except flaggers) and their activities are restricted at all times to one side of the pavement.
3. Additional one-way control may be effected by the following means:
   (1) Flag-carrying vehicle (2) Official vehicle
   (3) Pilot vehicles (4) Traffic signals

   When flaggers are the sole means of one-way control the flaggers shall be in sight of each other or in direct communication at all times.
4. The first two warning signs shall have an 450 mm x 450 mm (min.) (min.) orange flag and a Type B light attached and operating at all times.
   Mesh signs may be used for (Daylight Only) operations Type B Lights and Orange Flags are not required.
5. The FLAGGER legend sign may be substituted for the symbol sign.
6. Arrows denote direction of traffic only and do not reflect pavement markings.
7. Longitudinal dimensions are to be adjusted to fit field conditions. See Index No. 600.
8. When a side road intersects the highway on which work is being performed additional traffic control devices shall be erected in accordance with other applicable TCZ Indexes.
9. For general TCZ requirements and additional information refer to Index No. 600.

TYPICAL APPLICATIONS

Marking Patches
Field Patches
String Line
Utility Work
Cleaning Up Debris On Pavement
Pavement Coring And Straight Edging

STATE OF FLORIDA DEPARTMENT OF TRANSPORTATION
ROAD DESIGN

TRAFFIC CONTROL THROUGH WORK ZONES
TWO-LANE TWO-WAY • RURAL SHORTTIME DAY OR NIGHT OPERATIONS

	Names	Dates	Approved By
Designed By		12/87	Clark A. Scott
Drawn By		12/87	State Traffic Plans Engineer
Checked By		12/87	
F.H.W.A. Approved:			

Revision No.	Sheet No.	Index No.
94	1 of 1	607

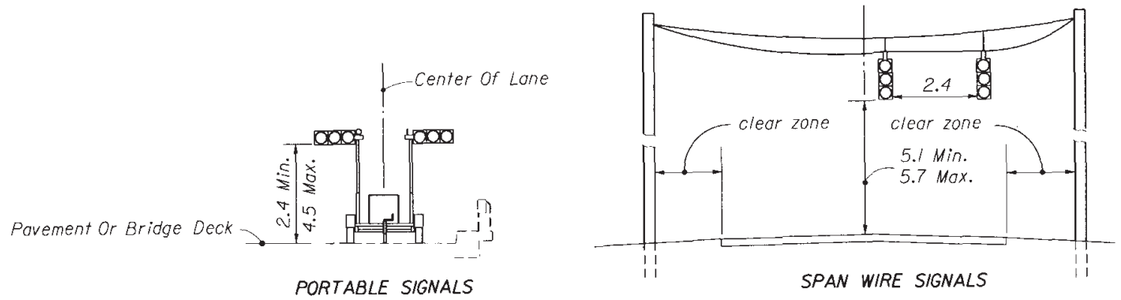

SIGNAL MOUNT DETAILS

SYMBOLS

- Work Area
- Sign With 450 mm x 450 mm (Min.) Orange Flag And Type B Light
- Work Zone Sign
- Traffic Signal
- Type I Or Type II Barricade Or Vertical Panel Or Drum (With Steady Burning Light At Night Only). Tubular Markers May Be Used During Daylight Only. Cones May Be Used During Daylight And As Permitted At Night.
- Type III Barricade
- Stop Bar
- Flagger
- Portable Signal

GENERAL NOTES

1. Work operations shall be confined to one traffic lane, except for haul road crossings, leaving the opposite lane open to traffic.
2. All vehicles, equipment, workers (except flaggers) and their activities are restricted at all times to one side of the pavement, except for haul road crossings.
3. The installation and timing of signals shall be approved by the District Traffic Operations Engineer prior to signals being placed in operation.

   Where sight distance to the signal is limited, the signals may be mounted on span wire at the discretion of the Engineer.

   The maximum distance between portable traffic signals (receiver/controllers) shall be 0.4 kilometers, however, in no case shall the distance exceed the maximum distance at which the remote operator (transmitter) can positively and and safely operate both portable signals.
4. Flaggers to supplement the signal operator/flagger shall be used when needed to assure safe movements between traffic and operating equipment, as determined by the Engineer.
5. The first two warning signs shall have a 450 mm x 450 mm (min.) orange flag and a Type B light attached and operating at all times.
6. When needed, an additional warning sign may be installed in advance of the ROAD CONSTRUCTION AHEAD sign. The distance between successive signs shall be 150.0 meters.
7. The SIGNAL AHEAD legend sign may be substituted for the symbol sign.
8. All signs shall be post mounted if the closure time exceeds 12 hours.
9. SIGNAL AHEAD and EQUIPMENT CROSSING AHEAD signs are to be removed or fully covered when no work is being performed and the highway is open to two-way traffic. Type III Barricades shall be in place to block haul road access when the haul road is not in operation and a flagger/signal operator is not on duty, except when the haul road is an existing properly marked road.
10. Arrows denote direction of traffic only and do not reflect pavement markings.
11. Longitudinal dimensions are to be adjusted to fit field conditions. See Index No. 600.
12. When a side road intersects the highway on which work is being performed additional traffic control devices shall be erected in accordance with other applicable TCZ Indexes.
13. For general TCZ requirements and additional information refer to Index No. 600.
14. Span wire signals are to be used only in active work zones, where the contractor can monitor signal operation and maintain traffic with flaggers in the event of a power failure.

TYPICAL APPLICATION

Pavement Repair
Shoulder & Roadside Work
Bridge Work
Box Culvert Work
Drainage Work
Utility Work
Haul Road Crossing

CONDITIONS

WHERE ANY VEHICLE, EQUIPMENT, WORKERS OR THEIR ACTIVITIES WILL ENCROACH ON ONE LANE OR MOMENTARILY ENCROACH ON BOTH LANES OF A TWO-LANE TWO-WAY ROADWAY AND TRAFFIC SIGNALS ARE NEEDED.

STATE OF FLORIDA DEPARTMENT OF TRANSPORTATION
ROAD DESIGN

TRAFFIC CONTROL THROUGH WORK ZONES
TWO-LANE, TWO-WAY
LANE CLOSURE BY SIGNAL CONTROL
DAY OR NIGHT OPERATIONS

	Names	Dates	Approved By Clark A. Scott State Traffic Plans Engineer		
Designed By		12/87			
Drawn By		12/87			
Checked By		12/87	Revision No.	Sheet No.	Index No.
F.H.W.A. Approved:			94	1 of 4	608

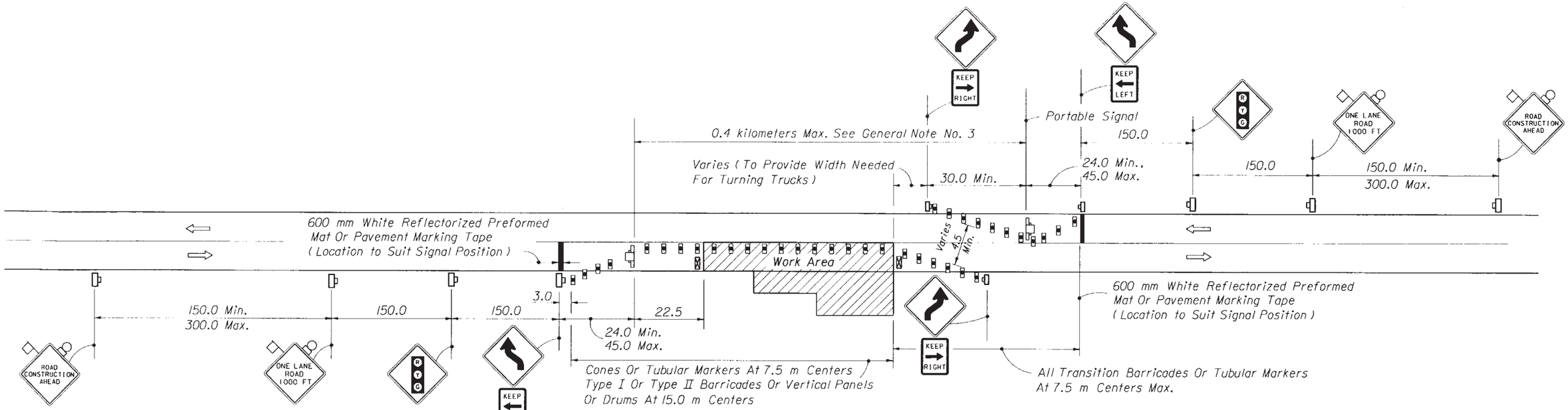

SINGLE LANE CLOSURE • ROADWAY AND BRIDGES ALL LENGTHS

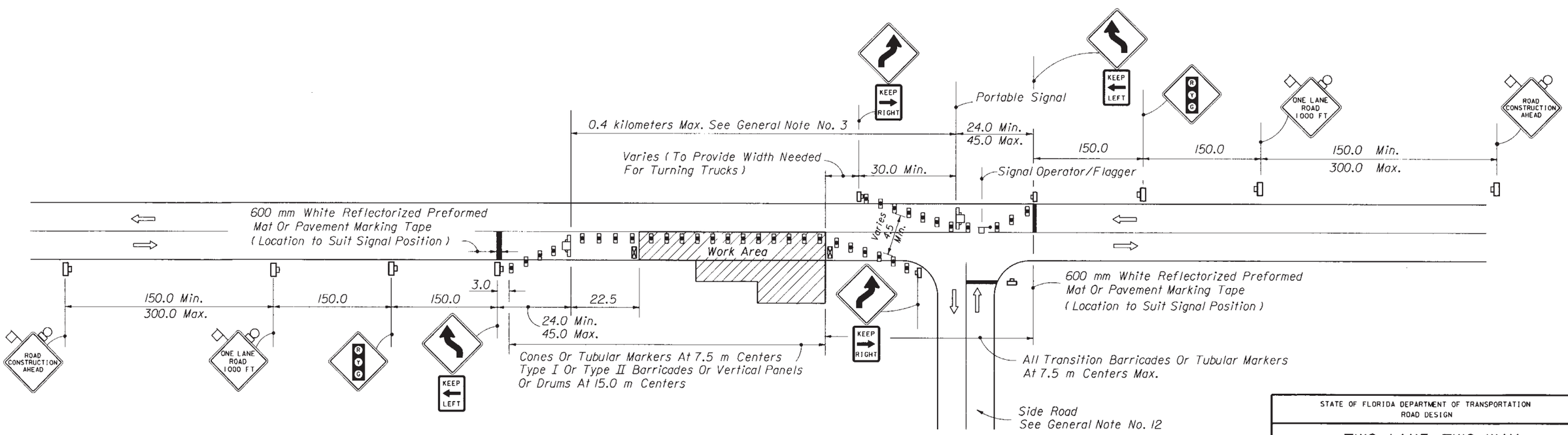

SINGLE LANE CLOSURE • ROADWAY AND BRIDGES ALL LENGTHS

STATE OF FLORIDA DEPARTMENT OF TRANSPORTATION
ROAD DESIGN

TWO-LANE, TWO-WAY LANE CLOSURE BY SIGNAL CONTROL DAY OR NIGHT OPERATIONS

	Names	Dates
Designed By		5/89
Drawn By		5/89
Checked By		5/89

F.H.W.A. Approved:

Approved By Charles A. Scott
State Traffic Plans Engineer

Revision No.	Sheet No.	Index No.
94	2 of 4	608

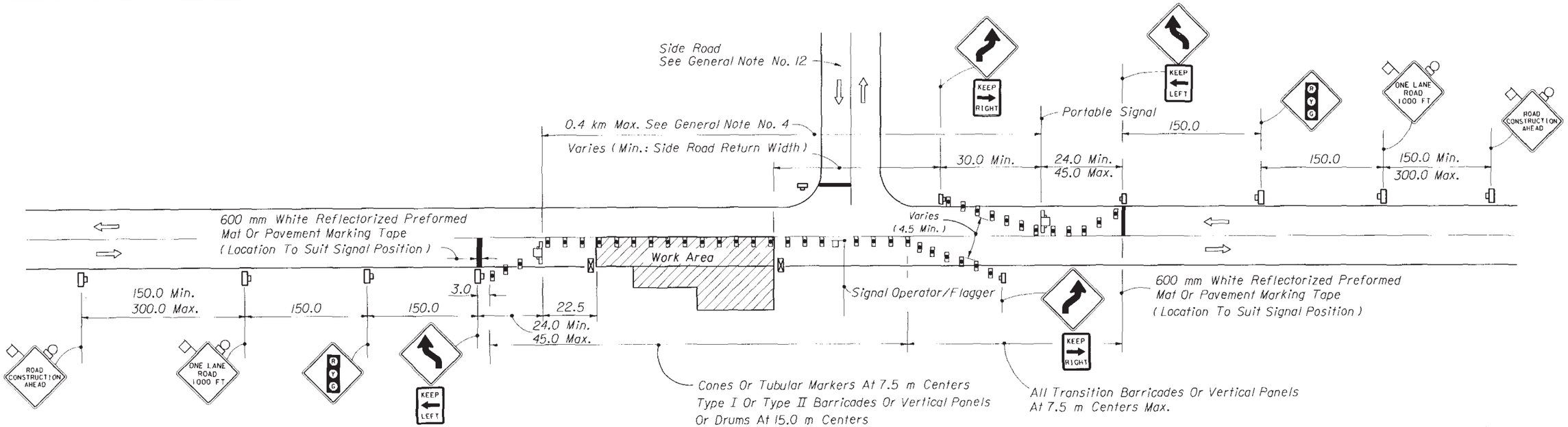

SINGLE LANE CLOSURE • ROADWAY AND BRIDGES ALL LENGTHS

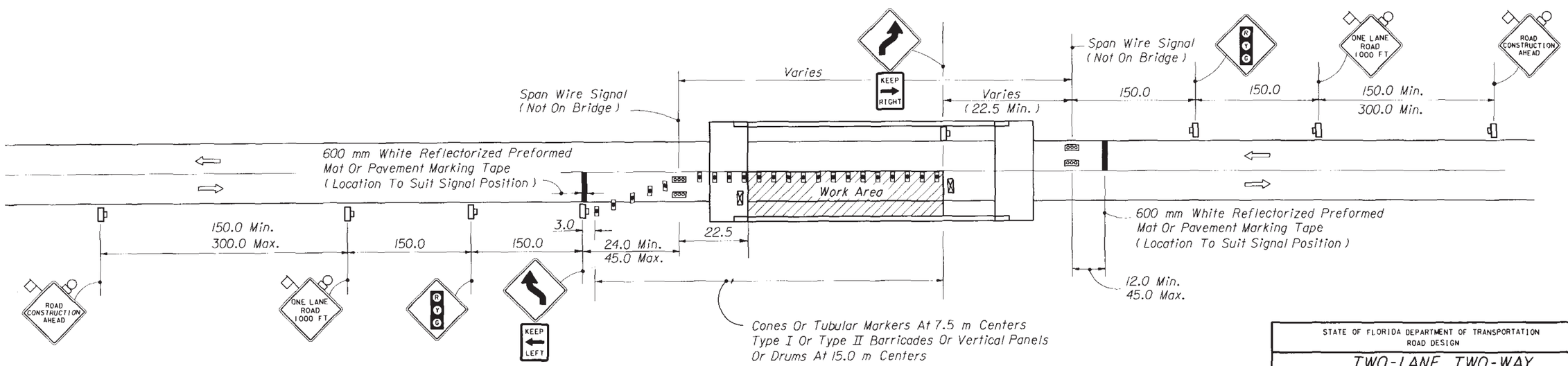

SINGLE LANE CLOSURE • SHORT BRIDGES

STATE OF FLORIDA DEPARTMENT OF TRANSPORTATION
ROAD DESIGN

TWO-LANE, TWO-WAY
LANE CLOSURE BY SIGNAL CONTROL
DAY OR NIGHT OPERATIONS

	Names	Dates
Designed By		5/89
Drawn By		5/89
Checked By		5/89

Approved By Clark A. Scott
State Traffic Plans Engineer

Revision No.	Sheet No.	Index No.
94	3 of 4	608

F.H.W.A. Approved:

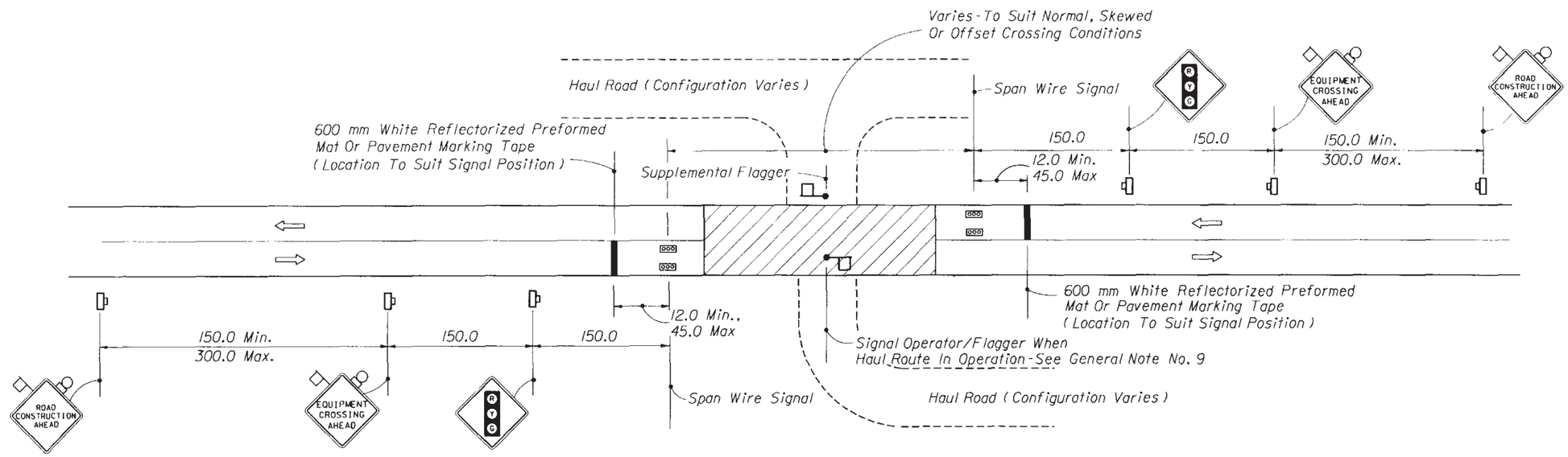

MOMENTARY ROADWAY CLOSURE • HAUL ROUTE CROSSING

STATE OF FLORIDA DEPARTMENT OF TRANSPORTATION
ROAD DESIGN

TWO-LANE, TWO-WAY
LANE CLOSURE BY SIGNAL CONTROL
DAY OR NIGHT OPERATIONS

	Names	Dates
Designed By		5/89
Drawn By		5/89
Checked By		5/89

Approved By
Clark A. Scott
State Roadway Design Engineer

Revision No.	Sheet No.	Index No.
94	4 of 4	608

F.H.W.A. Approved:

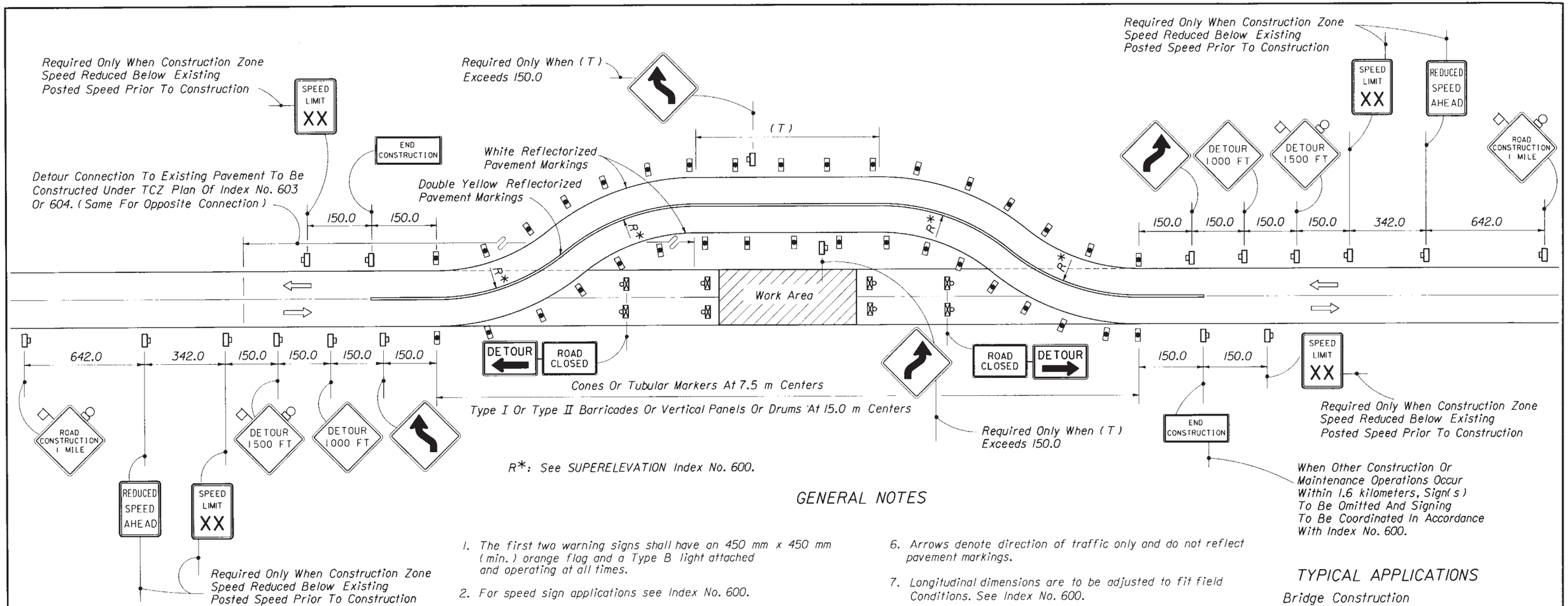

GENERAL NOTES

1. The first two warning signs shall have an 450 mm x 450 mm (min.) orange flag and a Type B light attached and operating at all times.
2. For speed sign applications see Index No. 600.
3. Where the tangent distance (T) exceeds 180.0 meters, spacing between cones or tubular markers may be increased to 15.0 meters or spacing between Type I or Type II barricades, or vertical panels or drums may be increased to 30.0 meters within limits of the tangent, or post mounted delineators at 15.0 meter centers may be substituted for the barricades, vertical panels or drums.
4. On the existing pavement all existing markings within the realignment which conflict with the revised traffic pattern are to be removed and removable pavement markings used for marking a new centerline and edge lines.
5. Where the tangent distance (T) exceeds 180.0 meters and no passing or stopping sight distance restrictions exist, the yellow reflectorized markings used to indicate the centerline of the traveled way may be replaced with yellow reflectorized markings in a broken pattern. For raised pavement marker application see Index No. 600 and Index No. 17352.
6. Arrows denote direction of traffic only and do not reflect pavement markings.
7. Longitudinal dimensions are to be adjusted to fit field Conditions. See Index No. 600.
8. When a side road intersects the highway on which work is being performed additional traffic control devices shall be erected in accordance with other applicable TCZ Indexes.
9. If temporary structures are required on the detour traffic control will be in conformance with Index No. 650.
10. For general TCZ requirements and additional information refer to Indexes Nos. 600 and 17352.

SYMBOLS

- Work Area
- Sign With 450 mm x 450 mm (Min.) Orange Flag And Type B Light
- Type I Or Type II Barricade Or Vertical Panel Or Drum (With Steady Burning Light At Night Only). Tubular Markers May Be Used During Daylight Only. Cones May Be Used During Daylight And As Permitted At Night.
- Type III Barricade (With Flashing Light)
- Work Zone Sign

TYPICAL APPLICATIONS

Bridge Construction
Subgrade Restoration
Culvert Repair Or Construction

CONDITIONS

WHERE ANY VEHICLE, EQUIPMENT, WORKERS OR THEIR ACTIVITIES REQUIRE THE CLOSURE OF BOTH LANES AND A TEMPORARY DETOUR IS CONSTRUCTED

STATE OF FLORIDA DEPARTMENT OF TRANSPORTATION
ROAD DESIGN

TRAFFIC CONTROL THROUGH WORK ZONES
TWO-LANE, TWO-WAY • RURAL
TEMPORARY DETOUR
DAY OR NIGHT OPERATIONS

	Names	Dates
Designed By		12/87
Drawn By		12/87
Checked By		12/87

Approved By Clark A. Scott
State Traffic Plans Engineer

Revision No.	Sheet No.	Index No.
94	1 of 1	609

F.H.W.A. Approved:

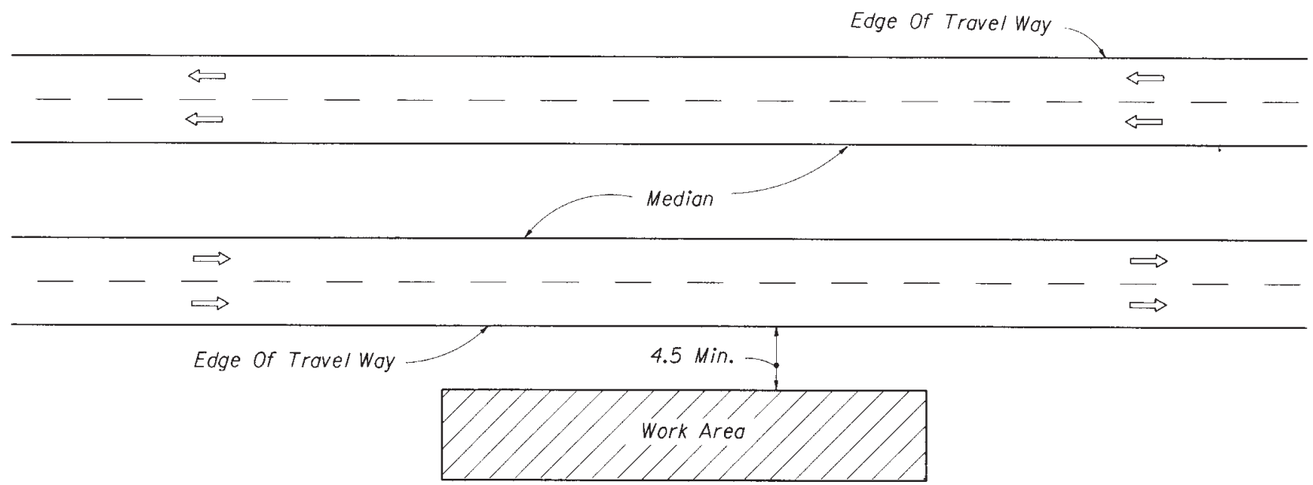

GENERAL NOTES

1. If the work operation requires that two or more work vehicles cross the 4.5 m zone in any one hour, traffic control will be in conformance with Index No. 602.
2. No special signing is required.
3. This index also applies when work is being performed on a multilane undivided highway.
4. This index also applies to work performed in the median more than 4.5 m from edge of travel way, both roadways.
5. Arrows denote direction of traffic only and do not reflect pavement markings.
6. When a side road intersects the highway on which work is being performed additional traffic control devices shall be erected in accordance with other applicable TCZ Indexes.
7. For general TCZ requirements and additional information refer to Index No. 600.

TYPICAL APPLICATIONS

Landscaping Work
Utility Work
Fencing Work
Cleaning Drainage Structures
Reworking Ditches

SYMBOLS

Work Area

CONDITIONS

WHERE ALL VEHICLES, EQUIPMENT, WORKERS AND THEIR ACTIVITIES ARE MORE THAN 4.5 m FROM THE EDGE OF PAVEMENT

STATE OF FLORIDA DEPARTMENT OF TRANSPORTATION
ROAD DESIGN

TRAFFIC CONTROL THROUGH WORK ZONES

MULTILANE DIVIDED OR UNDIVIDED RURAL • DAY OR NIGHT OPERATIONS

	Names	Dates	Approved By
Designed By		12/87	Clark A. Scott
Drawn By		12/87	Deputy State Design Engineer, Roadways
Checked By		12/87	

F.H.W.A. Approved:	Revision No.	Sheet No.	Index No.
	94	1 of 1	610

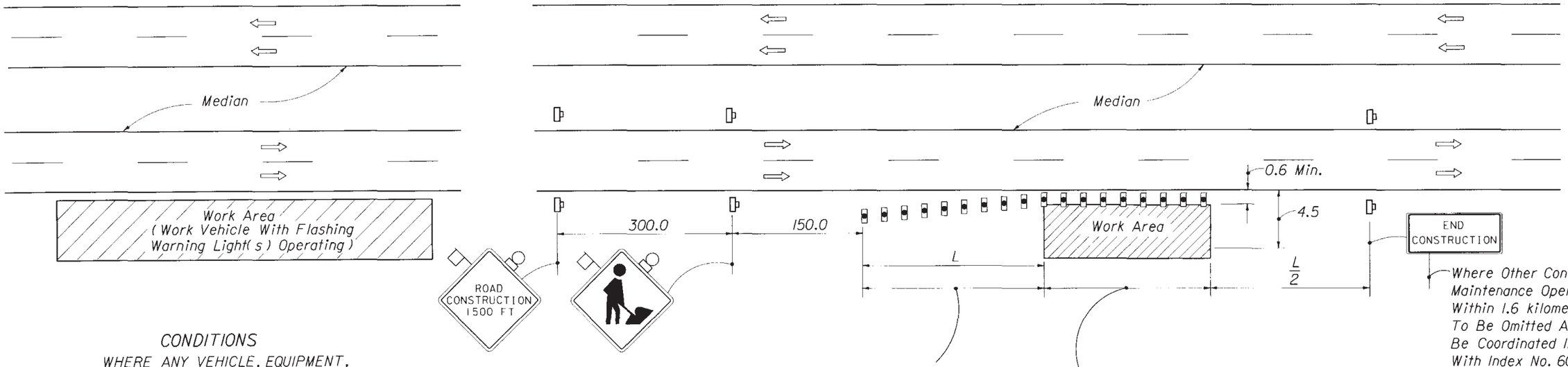

Where Other Construction Or Maintenance Operations Occur Within 1.6 kilometers, Sign(s) To Be Omitted And Signing To Be Coordinated In Accordance With Index No. 600.

CONDITIONS

WHERE ANY VEHICLE, EQUIPMENT, WORKERS OR THEIR ACTIVITIES ENCROACH THE AREA CLOSER THAN 4.5 m BUT NOT CLOSER THAN 0.6 m To THE EDGE OF PAVEMENT FOR A PERIOD OF LESS THAN 60 MINUTES

Maximum spacing between cones and tubular markers shall be 7.5 m. Maximum spacing between Type I or Type II barricades or vertical panels or drums shall be based on the speed limit as follows: 5.0 m up to 25 MPH; 10.0 m for 30 MPH - 40 MPH; 15.0 m for 45 MPH and greater.

Cones Or Tubular Markers At 7.5 Meter Centers For First 75.0 Meters Thereafter At 15.0 Meter Centers Or Either Type I Or Type II Barricades Or Vertical Panels Or Drums At 15.0 Meter Centers For First 75.0 Meters Thereafter At 30.0 Meter Centers.

CONDITIONS

WHERE ANY VEHICLE, EQUIPMENT, WORKERS OR THEIR ACTIVITIES ENCROACH THE AREA CLOSER THAN 4.5 m BUT NOT CLOSER THAN 0.6 m TO THE EDGE OF PAVEMENT FOR A PERIOD OF 60 MINUTES OR GREATER

GENERAL NOTES

1. All vehicles, equipment, workers and their activities are restricted at all times to one side of the roadway.
2. If the work operation encroaches on the through traffic lanes or when four or more work vehicles enter the through traffic lanes in a one hour period a flagger shall be provided and a FLAGGER sign shall be substituted for the WORKERS sign. The flagger shall be positioned at the point of vehicle entry or departure from the work area.
3. This TCZ plan also applies to work performed in the median more than 0.6 meters but less than 4.5 meters from the edge of either pavement.
4. The first two warning signs, each side, shall have a 450 mm x 450 mm (min.) orange flag and a Type B light attached and operating at all times.

   Mesh signs may be used for (Daylight Only) operations Type B Lights and Orange Flags are not required.
5. The WORKERS legend sign may be substituted for the symbol sign.
6. $L\ (min) = \frac{WS}{3.2}$ for speeds ≥ 70 km/h

   $= \frac{WS^2}{300}$ for speeds ≤ 60 km/h

   Where:
   W = Width of lateral transition in meters
   S = Posted speed limit (converted to km/h).
7. Arrows denote direction of traffic only and do not reflect pavement markings.
8. Longitudinal dimensions are to be adjusted to fit field conditions. See Index No. 600.
9. When work is being performed on a multilane undivided roadway the signs normally mounted in the median (as shown) shall be omitted.
10. WORKERS signs to be removed or fully covered when no work is being performed.
11. END CONSTRUCTION signs required only when work exceeds one daylight period.
12. When a side road intersects the highway on which work is being performed additional traffic control devices shall be erected in accordance with other applicable TCZ Indexes.
13. If the work operation does not exceed 15 minutes, signs, barricades, vertical panels, cones, tubular markers, or drums will not be required provided vehicles in the work area have warning light(s) operating.
14. For general TCZ requirements and additional information refer to Index No. 600.

English to Metric Speed Conversion	
MPH	km/h
65	110
60	100
55	90
50	80
45	70
40	60
35	60
30	50

SYMBOLS

Work Area

Sign With 450 mm x 450 mm (Min.) Orange Flag And Type B Light

Type I Or Type II Barricade Or Vertical Panel Or Drum (With Steady Burning Light At Night Only). Tubular Markers May Be Used During Daylight Only. Cones May Be Used During Daylight And As Permitted At Night.

Work Zone Sign

TYPICAL APPLICATIONS

Utility Work
Culvert Extensions
Side Slope Work
Guardrail Work
Landscaping Work
Cleaning Drainage Structures
Reworking Ditches
Sign Installation And Maintenance
Shoulder Repair

STATE OF FLORIDA DEPARTMENT OF TRANSPORTATION
ROAD DESIGN

TRAFFIC CONTROL THROUGH WORK ZONES

MULTILANE DIVIDED OR UNDIVIDED RURAL • DAY OR NIGHT OPERATIONS

	Names	Dates
Designed By		12/87
Drawn By		12/87
Checked By		12/87
F.H.W.A. Approved:		

Approved By Clark A Scott
State Traffic Plans Engineer

Revision No.	Sheet No.	Index No.
94	1 of 1	611

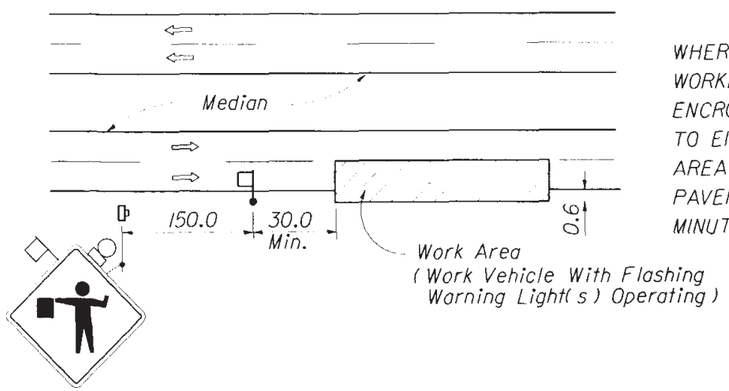

CONDITIONS

WHERE ANY VEHICLE, EQUIPMENT, WORKERS OR THEIR ACTIVITIES ENCROACH ON THE LANE ADJACENT TO EITHER SHOULDER AND THE AREA 0.6 m OUTSIDE THE EDGE OF PAVEMENT FOR A PERIOD OF 15 MINUTES OR LESS

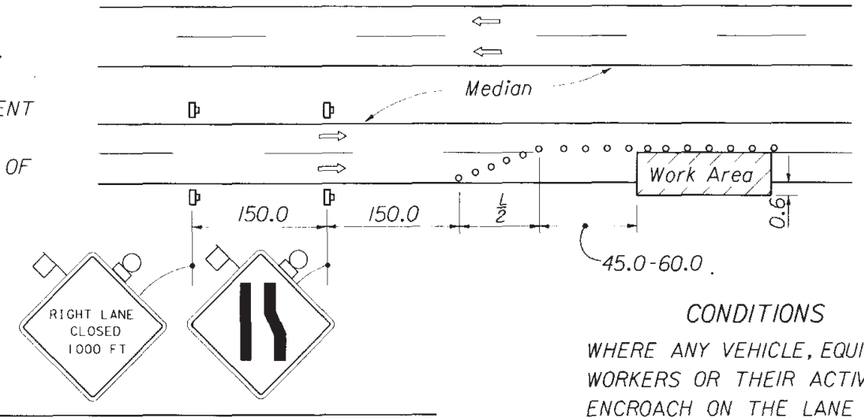

CONDITIONS

WHERE ANY VEHICLE, EQUIPMENT, WORKERS OR THEIR ACTIVITIES ENCROACH ON THE LANE ADJACENT TO EITHER SHOULDER AND THE AREA 0.6 m OUTSIDE THE EDGE OF PAVEMENT FOR A PERIOD OF MORE THAN 15 MINUTES BUT LESS THAN 60 MINUTES

CONDITIONS

WHERE ANY VEHICLE, EQUIPMENT, WORKERS OR THEIR ACTIVITIES ENCROACH ON THE LANE ADJACENT TO EITHER SHOULDER AND THE AREA 0.6 m OUTSIDE THE EDGE OF PAVEMENT FOR A PERIOD OF 60 MINUTES OR GREATER

English to Metric Speed Conversion	
MPH	km/h
65	110
60	100
55	90
50	80
45	70
40	60
35	60
30	50

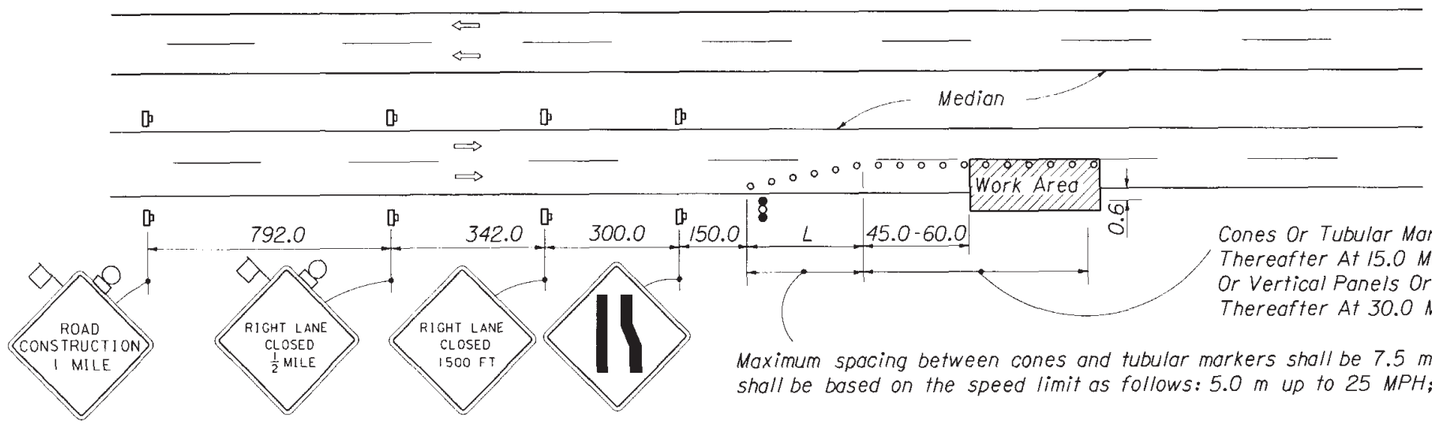

Cones Or Tubular Markers At 7.5 Meter Centers For First 75.0 Meters Thereafter At 15.0 Meter Centers Or Either Type I Or Type II Barricades Or Vertical Panels Or Drums At 15.0 Meter Centers For First 75.0 Meters Thereafter At 30.0 Meter Centers.

Maximum spacing between cones and tubular markers shall be 7.5 m. Maximum spacing between Type I or Type II barricades or vertical panels or drums shall be based on the speed limit as follows: 5.0 m up to 25 MPH; 10.0 m for 30 MPH - 40 MPH; 15.0 m for 45 MPH and greater.

GENERAL NOTES

1. Work operations shall be confined to one traffic lane, leaving the adjacent lane open to traffic.
2. All vehicles, equipment, workers, and their activities are restricted at all times to one side of the pavement.
3. The first two warning signs, each side, shall have an 450 mm x 450 mm (min.) orange flag and a Type B light attached and operating at all times.
4. Mesh signs may be used for (Daylight Only) operations. Type B Lights and Orange Flags are not required.
5. On undivided highways the median signs as shown are to be omitted.
6. When work is performed in the median lane on divided highways the barricading plan is inverted and left lane closed and lane reduction signs substituted for the right lane closed and lane reduction signs.

   The same applies to undivided highways with the following exceptions: (a) Work shall be confined within one median lane. (b) Additional barricades, cones, or drums shall be placed along the centerline abutting the work area and across the trailing end of the work area.

   When work on undivided highways occurs across the centerline so as to encroach on both median lanes, the inverted plan is applied to the approach of both roadways.
7. The RIGHT (LEFT) LANE CLOSED signs are to be removed or fully covered when no work is being performed and the highway is open to traffic.
8. L (min.) = Length of taper meters :

   $= \frac{WS}{3.2}$ for speeds ≥ 70 km/h

   $= \frac{WS^2}{300}$ for speeds ≤ 60 km/h

   Where:

   W = Width of lateral transition in meters

   S = Posted speed limit (converted to km/h).
9. Arrows denote direction of traffic only and do not reflect pavement markings.
10. Longitudinal dimensions are to be adjusted to fit field conditions. See Index No. 600.
11. When work is being performed on a multilane undivided roadway the signs normally mounted in the median (as shown) shall be omitted.
12. This TCZ plan does not apply when work is being performed in the middle or inside lane(s) of a six or more lane highway. See Indexes Nos. 616 and 617.
13. When a side road intersects the highway on which work is being performed additional traffic control devices shall be erected in accordance with other applicable TCZ Indexes.
14. For general TCZ requirements and additional information, refer to Index No. 600.

SYMBOLS

- Work Area
- Sign With 450 mm x 450 mm (Min.) Orange Flag And Type B Light
- Type I Or Type II Barricade Or Vertical Panel Or Cone Or Tubular Marker Or Drum
- Work Zone Sign
- Flagger
- Advance Warning Arrow Panel

TYPICAL APPLICATIONS

Pavement Resurfacing
Pavement Repair
Utility Work
Bridge Repair
Guardrail Work
Pavement Coring And Straight Edging

STATE OF FLORIDA DEPARTMENT OF TRANSPORTATION
ROAD DESIGN

TRAFFIC CONTROL THROUGH WORK ZONES

MULTILANE, DIVIDED AND UNDIVIDED RURAL • OPERATIONS ONE DAYLIGHT PERIOD OR LESS

	Names	Dates	Approved By
Designed By		12/87	Clark A. Scott, State Traffic Plans Engineer
Drawn By		12/87	
Checked By		12/87	

F.H.W.A. Approved:	Revision No.	Sheet No.	Index No.
	94	1 of 1	612

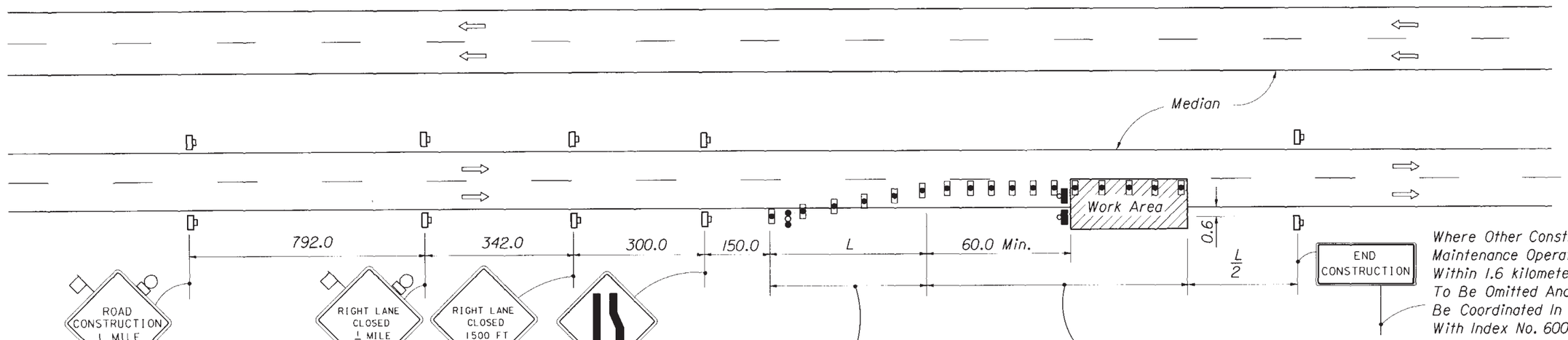

English to Metric Speed Conversion	
MPH	km/h
65	110
60	100
55	90
50	80
45	70
40	60
35	60
30	50

Where Other Construction Or Maintenance Operations Occur Within 1.6 kilometers, Signs To Be Omitted And Signing To Be Coordinated In Accordance With Index No. 600

Cones Or Tubular Markers At 7.5 Meter Centers For First 75.0 Meters Thereafter At 15.0 Meter Centers Or Either Type I Or Type II Barricades Or Vertical Panels Or Drums At 15.0 Meter Centers For First 75.0 Meters Thereafter At 30.0 Meter Centers.

Maximum spacing between cones and tubular markers shall be 7.5 m. Maximum spacing between Type I or Type II barricades or vertical panels or drums shall be based on the speed limit as follows: 5.0 m up to 25 MPH; 10.0 m for 30 MPH - 40 MPH; 15.0 m for 45 MPH and greater.

SYMBOLS

- Work Area
- Sign With 450 mm x 450 mm (Min.) Orange Flag And Type B Light
- Type I Or Type II Barricade Or Vertical Panel Or Drum (With Steady Burning Light At Night Only). Tubular Markers May Be Used During Daylight Only. Cones May Be Used During Daylight And As Permitted At Night.
- Type I, Type II Or Type III Barricade Or Vertical Panel Or Drum (With Flashing Light)
- Work Zone Sign
- Advance Warning Arrow Panel

GENERAL NOTES

1. Work operations shall be confined to one traffic lane, leaving the adjacent lane open to traffic.
2. All vehicles, equipment, workers and their activities are restricted at all times to one side of the pavement.
3. The first two warning signs, each side, shall have a 450 mm x 450 mm (min.) orange flag and a Type B light attached and operating at all times.
4. All signs shall be post mounted if the closure time exceeds 12 hours.
5. On undivided highways the median signs as shown are to be omitted.
6. When work is performed in the median lane on divided highways the barricading plan is inverted and left lane closed and lane reduction signs substituted for the right lane closed and lane reduction signs.

   The same applies to undivided highways with the following exceptions: (a) Work shall be confined within one median lane. (b) Additional barricades, cones, or drums shall be placed along the centerline abutting the work area and across the trailing end of the work area.

   When work on undivided highways occurs across the centerline so as to encroach on both median lanes, the inverted plan is applied to the approach of both roadways.
7. Signs and traffic control devices are to be modified in accordance with INTERMITTENT WORK STOPPAGE details (sheet 2 of 2) when no work is being performed and the highway is open to traffic.
8. L (min.) = Length of taper in meters:
   $= \frac{WS}{1.6}$ for speeds ≥ 70 km/h
   $= \frac{WS^2}{150}$ for speeds ≤ 60 km/h

   Where:
   W = Width of lateral transition in meters
   S = Posted speed limit (converted to km/h).
9. Arrows denote direction of traffic only and do not reflect pavement markings.
10. Longitudinal dimensions are to be adjusted to fit field conditions. See Index No. 600.
11. When work is being performed on a multilane undivided roadway the signs normally mounted in the median (as shown) shall be omitted.
12. When a side road intersects the highway on which work is being performed, additional traffic control devices shall be erected in accordance with other applicable TCZ Indexes.
13. For general TCZ requirements and additional information refer to Index No. 600.

TYPICAL APPLICATIONS

Pavement Resurfacing
Pavement Repair
Utility Work
Bridge Repair
Guardrail Work

CONDITIONS

WHERE ANY VEHICLE, EQUIPMENT, WORKERS OR THEIR ACTIVITIES ENCROACH ON THE LANE ADJACENT TO EITHER SHOULDER AND THE AREA 0.6 m OUTSIDE THE EDGE OF PAVEMENT

STATE OF FLORIDA DEPARTMENT OF TRANSPORTATION
ROAD DESIGN

TRAFFIC CONTROL THROUGH WORK ZONES

MULTILANE, DIVIDED AND UNDIVIDED • RURAL NIGHT OPERATIONS OR OPERATIONS EXCEEDING ONE DAYLIGHT PERIOD

	Names	Dates
Designed By		12/87
Drawn By		12/87
Checked By		12/87

Approved By: State Traffic Plans Engineer

F.H.W.A. Approved:	Revision No.	Sheet No.	Index No.
	94	1 of 2	613

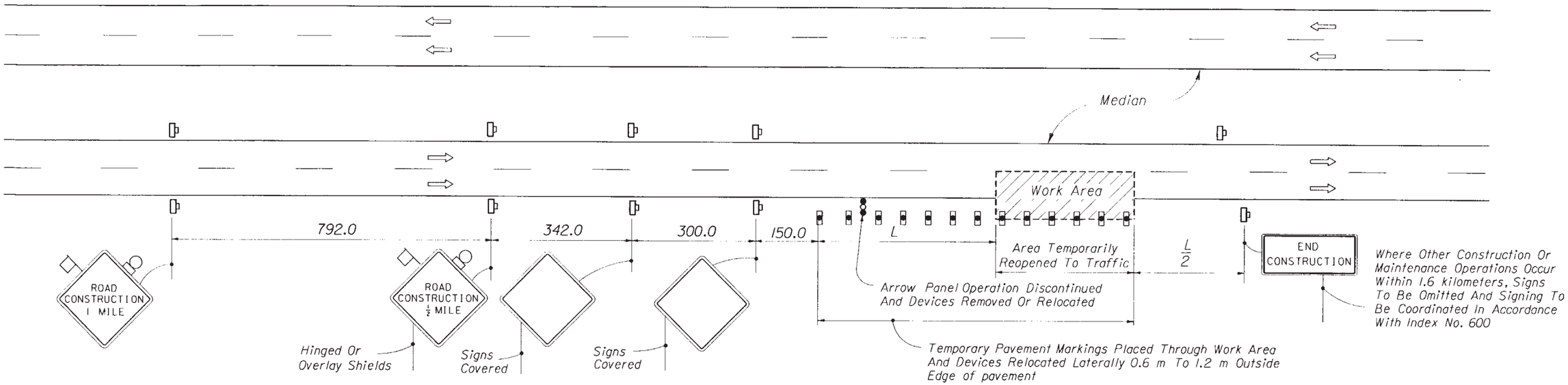

EVEN PAVEMENT

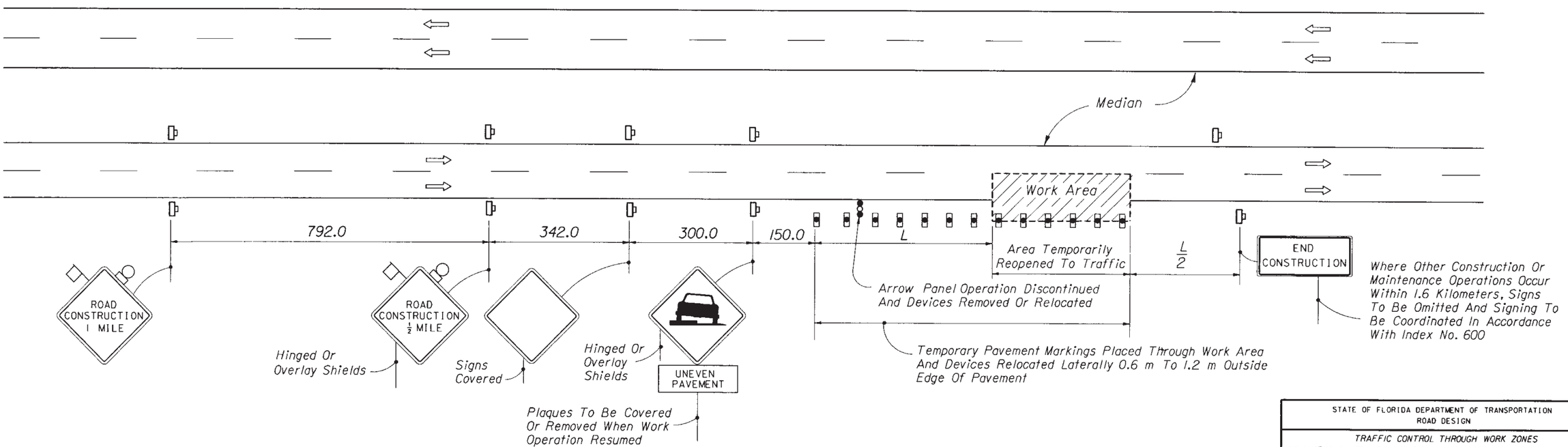

UNEVEN PAVEMENT

INTERMITTENT WORK STOPPAGE • RIGHT LANE REOPENED TO TRAFFIC • DAYTIME OR NIGHTTIME

STATE OF FLORIDA DEPARTMENT OF TRANSPORTATION
ROAD DESIGN

TRAFFIC CONTROL THROUGH WORK ZONES

MULTILANE, DIVIDED AND UNDIVIDED • RURAL NIGHT OPERATIONS OR OPERATIONS EXCEEDING ONE DAYLIGHT PERIOD

	Names	Dates
Designed By		12/87
Drawn By		12/87
Checked By		12/87

Approved By: Clark A. Scott
State Roadway Design Engineer

F.H.W.A. Approved:

Revision No.	Sheet No.	Index No.
94	2 of 2	613

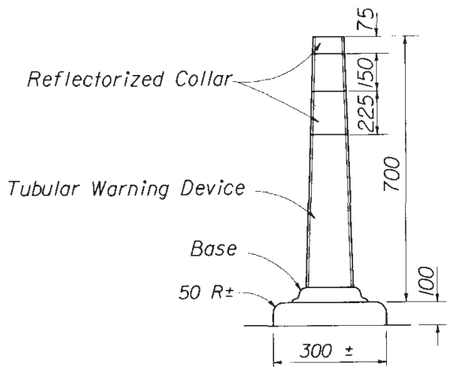

SECTION AA

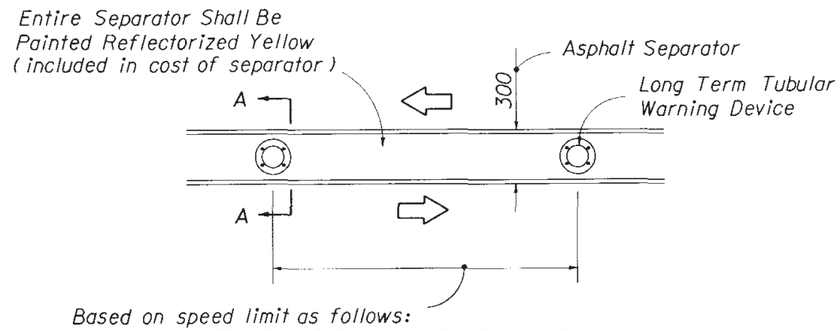

Based on speed limit as follows:
5.0 m up to 25 MPH; 10.0 m for 30 MPH - 40 MPH;
15.0 m for 45 MPH and greater.

PLAN

Notes: (a) The tubular device is to be made of a flexible material or have a flexible joint at the base such that it will not cause damage to vehicles upon impact and will return to its original shape after being struck by a 2265 kilogram vehicle at a velocity of 22.5 m/sec..

(b) The tubular device shall be orange with two white reflectorized collars.

(c) The Tubular device may be attached by bituminous adhesive or other methods approved by the Engineer.

(d) Reflectorized materials shall have a smooth sealed outer surface which will display the same approximate color day and night.

(e) Three Hundred Millimeter (300 mm) openings for drainage will be constructed in the separator island every 7.5 meters in areas of grades of 1% or less or every 15.0 meters in areas of grades over 1% as directed by the Engineer.

English to Metric Speed Conversion	
MPH	km/h
65	110
60	100
55	90
50	80
45	70
40	60
35	60
30	50

DETAIL OF TEMPORARY ASPHALT SEPARATOR

APPLICATIONS

Scheme 1: Restricted Construction Limits

Scheme 2: Unrestricted Construction Limits And Light To Moderate Traffic

Scheme 3: Unrestricted Construction Limits And Moderate To Heavy Traffic

Where: Construction Limits Are The Outward Beginning Or Ending Of Lane Reductions

Where: Unless A Specific Scheme Is Called For In The Plans, Scheme Selection Shall Be At The Contractors Option And As Approved By The Engineer

SYMBOLS

Work Area

Sign With 450 mm x 450 mm (Min.) Orange Flag And Type B Light

Type I Or Type II Barricade Or Vertical Panel Or Drum (With Steady Burning Light At Night Only). Tubular Markers May Be Used During Daylight Only. Cones May Be Used During Daylight And As Permitted At Night.

Work Zone Sign

Advance Warning Arrow Panel

GENERAL NOTES

1. All vehicles, equipment, workers and their activities are restricted at all times to one side of the highway.

2. The first two warning signs, each side, shall have a 450 mm x 450 mm orange flag and a Type B light attached and operating at all times.

3. All signs shall be post mounted.

4. TWO-WAY TRAFFIC sign(s) shall be repeated every four tenths (0.4) kilometer, in each direction, throughout the tangent distance (T).

5. $L\ (min.) = \frac{WS}{1.6}$ for speeds ≥ 70 km/h

   $= \frac{WS^2}{150}$ for speeds ≤ 60 km/h

   Where:
   W = Width of lateral transition in meters
   S = Posted speed limit (converted to km/h).

6. Where the tangent distance (T) exceeds 75.0 meters, spacing between cones or tubular markers may be increased to 15.0 meters or spacing between Type I or II barricades or vertical panels or drums may be increased to 30.0 meters within the limits of the tangent, or post mounted delineators at 15.0 meter centers may be substituted for barricades, vertical panels, cones, tubular markers or drums.

7. All existing pavement markings within the realignment which conflict with the revised traffic pattern are to be removed and removable pavement marking used for marking new edge lines.

8. Arrows denote direction of traffic only and do not reflect pavement markings.

9. Longitudinal dimensions are to be adjusted to fit field conditions. See Index No. 600.

10. When side roads, cross roads or interchanges are located within the limits for work zone traffic control additional traffic control devices shall be erected in accordance with other applicable TCZ Indexes.

11. For general TCZ requirements and additional information refer to Index No. 600.

CONDITIONS

WHERE ANY VEHICLE, EQUIPMENT, WORKERS OR THEIR ACTIVITIES REQUIRE THE CLOSURE OF ONE ROADWAY AND THE OPPOSING ROADWAY IS CONVERTED TO TEMPORARY TWO-WAY TRAVEL BY WAY OF CROSSOVERS

STATE OF FLORIDA DEPARTMENT OF TRANSPORTATION
ROAD DESIGN

TRAFFIC CONTROL THROUGH WORK ZONES

MULTILANE DIVIDED • RURAL
DAY OR NIGHT OPERATIONS

	Names	Dates
Designed By		12/87
Drawn By		12/87
Checked By		12/87

Approved By Charles Scott
State Traffic Plans Engineer

Revision No.	Sheet No.	Index No.
94	1 of 2	614

F.H.W.A. Approved:

BUFFER LENGTH (METERS)			
Construction Zone Speed MPH	Construction Zone Speed km/h	X (m)	Z (m)
60 - 70	100 - 110	170.0	190.0
55	90	110.0	155.0
≤ 50	≤ 80	55.0	115.0

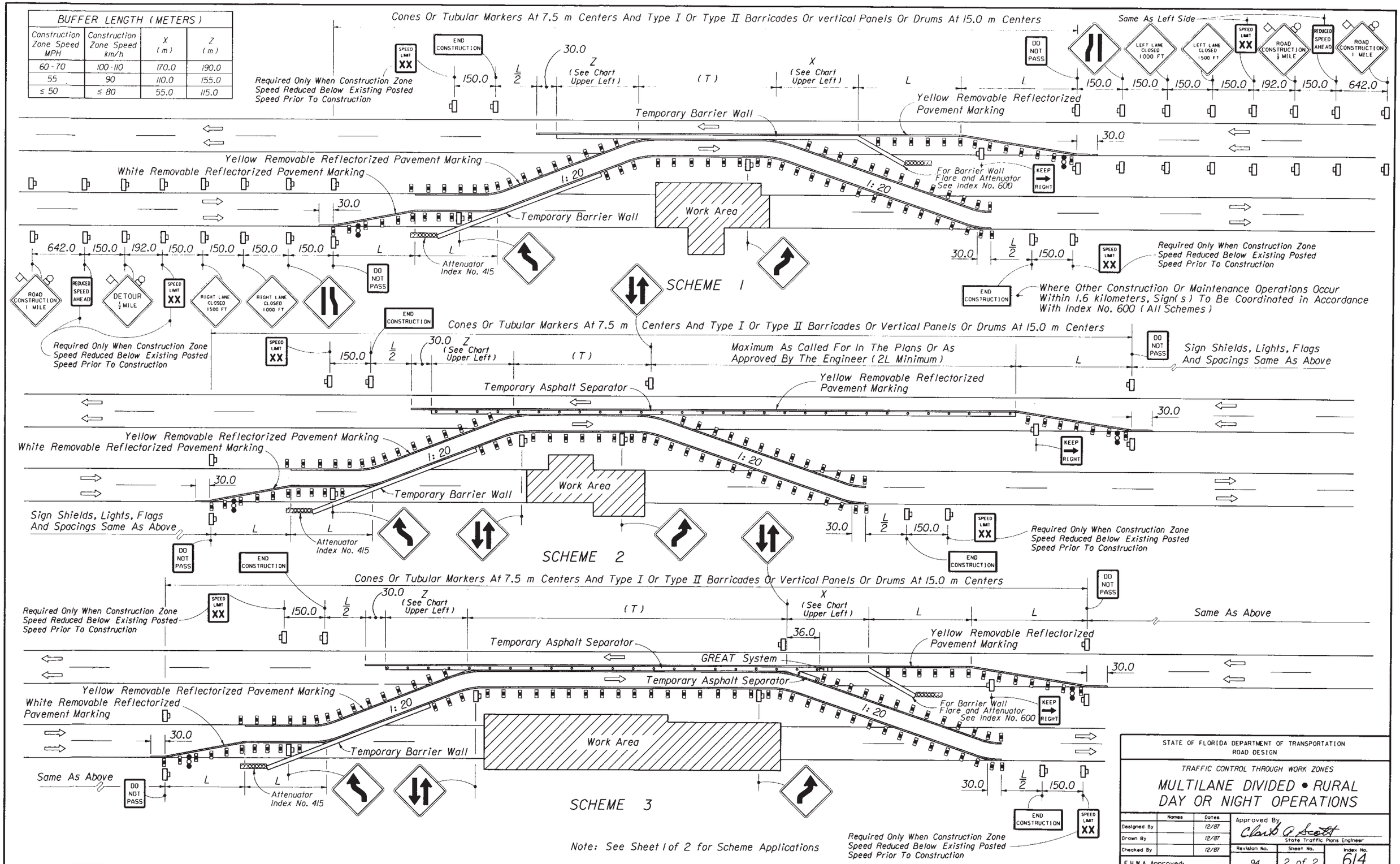

STATE OF FLORIDA DEPARTMENT OF TRANSPORTATION
ROAD DESIGN

TRAFFIC CONTROL THROUGH WORK ZONES

MULTILANE DIVIDED • RURAL DAY OR NIGHT OPERATIONS

	Names	Dates
Designed By		12/87
Drawn By		12/87
Checked By		12/87

Approved By: Clark A. Scott
State Traffic Plans Engineer

Revision No.	Sheet No.	Index No.
94	2 of 2	614

F.H.W.A. Approved:

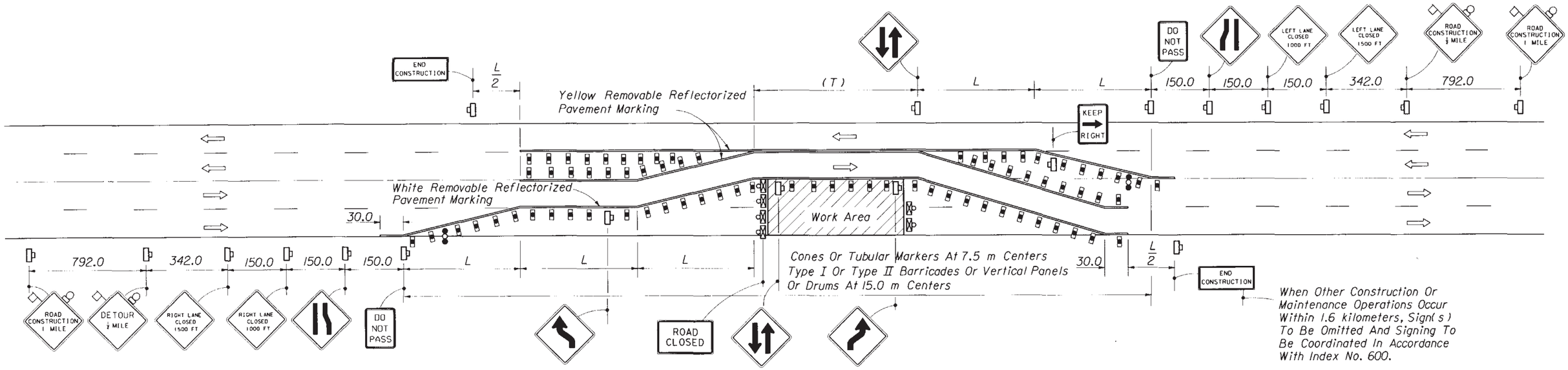

GENERAL NOTES

1. All vehicles, equipment, workers and their activities are restricted at all times to one side of the pavement.
2. The first two warning signs shall have a 450 mm x 450 mm (min.) orange flag and a Type B light attached and operating at all times.
3. All signs, except those required in paved areas, shall be post mounted if the closure time exceeds 12 hours.
4. TWO-WAY TRAFFIC signs shall be repeated every four-tenths (0.4) kilometer, in each direction, through the tangent distance (T).
5. L (min.) = $\frac{WS}{3.2}$ for speeds ≥ 70 km/h
   = $\frac{WS^2}{300}$ for speeds ≤ 60 km/h
   Where:
   W = Width of lateral transition in meters
   S = Posted speed limit (converted to km/h).
6. Where the tangent distance (T) exceeds 75.0 meters, spacing between cones or tubular markers may be increased to 15.0 meters or spacing between Type I or Type II barricades or vertical panels or drums may be increased to 30.0 meters within the limits of the tangent.
7. This index does not apply when work is being performed in the middle lane(s) of a six or more lane highway. Special maintenance of traffic details will be required.
8. Arrows denote direction of traffic only and do not reflect pavement markings.
9. Longitudinal dimensions are to be adjusted to fit field conditions. See Index No. 600.
10. When a side road intersects the highway on which work is being performed additional traffic control devices shall be erected in accordance with other applicable TCZ Indexes.
11. For general TCZ requirements and additional information refer to Index No. 600.

SYMBOLS

- Work Area
- Sign With 450 mm x 450 mm (Min.) Orange Flag And Type B Light
- Type I Or Type II Barricade Or Vertical Panel Or Drum (With Steady Burning Light At Night Only). Tubular Markers May Be Used During Daylight Only. Cones May Be Used During Daylight And As Permitted At Night.
- Type III Barricade (With Flashing Light)
- Work Zone Sign
- Advance Warning Arrow Panel

English to Metric Speed Conversion	
MPH	km/h
65	110
60	100
55	90
50	80
45	70
40	60
35	60
30	50

CONDITIONS

WHERE ANY VEHICLE, EQUIPMENT, WORKERS OR THEIR ACTIVITIES REQUIRE THE CLOSURE OF THE LANES IN ONE DIRECTION AND A DETOUR IS PROVIDED BY UTILIZING ONE LANE OF THE OPPOSING TRAFFIC LANES

STATE OF FLORIDA DEPARTMENT OF TRANSPORTATION
ROAD DESIGN

TRAFFIC CONTROL THROUGH WORK ZONES

MULTILANE UNDIVIDED • RURAL
DAY OR NIGHT OPERATIONS

	Names	Dates
Designed By		12/87
Drawn By		12/87
Checked By		12/87

Approved By Charles A. Scott
State Traffic Plans Engineer

Revision No.	Sheet No.	Index No.
94	1 of 1	615

F.H.W.A. Approved:

EXISTING POSTED SPEED	PROPOSED WORK ZONE SPEED	SI Units EXISTING POSTED SPEED	SI Units PROPOSED WORK ZONE SPEED
MPH	MPH	km/h	km/h
65	45	110	70
55	35 or 45	90	60 or 70
45	35	70	60

REMARKS

The 'Proposed Work Zone Speeds' are recommended speeds for the traffic control plan detailed below; however, where the Engineer deems other speeds are appropriate, the applicable speeds are to be shown on the plans.

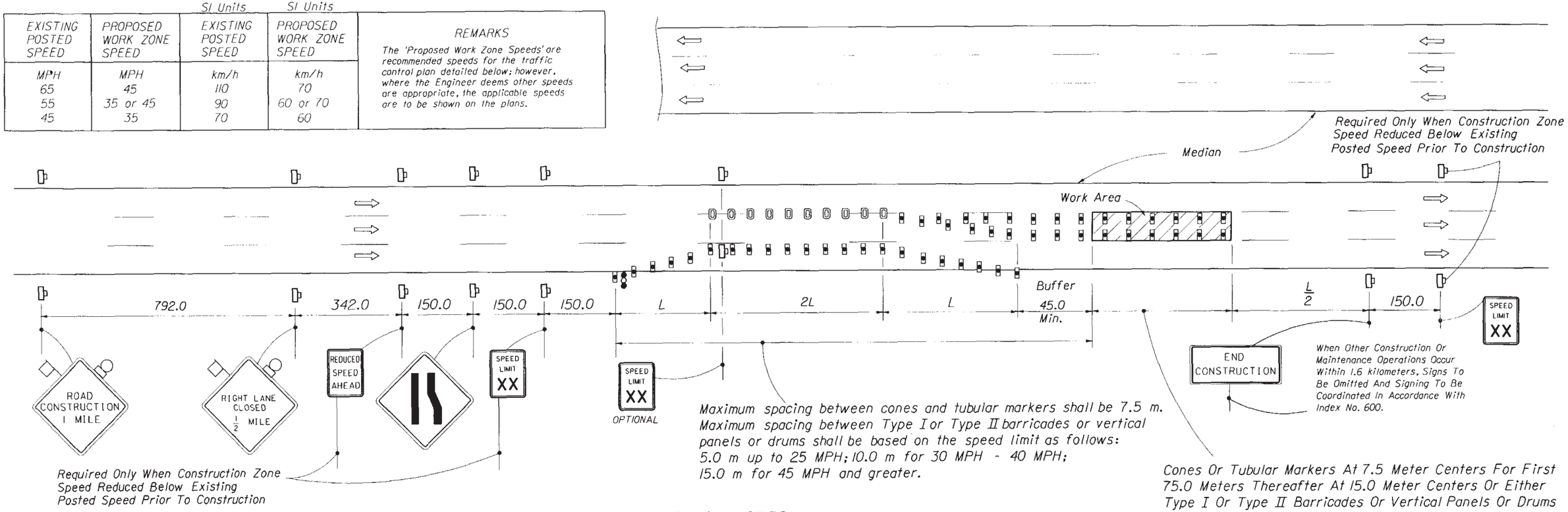

Maximum spacing between cones and tubular markers shall be 7.5 m. Maximum spacing between Type I or Type II barricades or vertical panels or drums shall be based on the speed limit as follows: 5.0 m up to 25 MPH; 10.0 m for 30 MPH - 40 MPH; 15.0 m for 45 MPH and greater.

Cones Or Tubular Markers At 7.5 Meter Centers For First 75.0 Meters Thereafter At 15.0 Meter Centers Or Either Type I Or Type II Barricades Or Vertical Panels Or Drums At 15.0 Meter Centers For First 75.0 Meters Thereafter At 30.0 Meter Centers.

CONDITION NOTES

1. Mesh signs may be used for (Daylight Only) operations Type B Lights and Orange Flags are not required.
2. The RIGHT LANE CLOSED and lane reduction signs are to be removed or fully covered when no work is being performed and the center lane is opened to traffic.
3. For work performed in the outside lane refer to Indexes Nos. 612 and 613.
4. When the lane closure exceeds a continuous 24 hour period all existing pavement markings within the realignment which conflict with the revised traffic pattern are to be removed and removable pavement marking used for marking new edge lines and centerline.

English to Metric Speed Conversion	
MPH	km/h
65	110
60	100
55	90
50	80
45	70
40	60
35	60
30	50

TYPICAL APPLICATIONS

Pavement Resurfacing
Pavement Repair

CONDITIONS

WHERE ANY VEHICLE, EQUIPMENT, WORKERS OR THEIR ACTIVITIES ENCROACH ON ANY PORTION OF A CENTER LANE OF A MULTILANE HIGHWAY, AND TWO DRIVING LANES ARE MAINTAINED ON THE TRAVEL WAY.

SYMBOLS

- Work Area
- Sign With 450 mm x 450 mm (Min.) Orange Flag And Type B Light
- Type I Or Type II Barricade Or Vertical Panel Or Drum (With Steady Burning Light At Night Only). Tubular Markers May Be Used During Daylight Only. Cones May Be Used During Daylight And As Permitted At Night.
- Work Zone Sign
- Advance Warning Arrow Panel
- Drum

GENERAL NOTES

1. All vehicles, equipment, workers, and their activities are restricted at all times to one side of the highway.
2. The first two warning signs each side shall have a 450 mm x 450 mm (min.) orange flag and a Type B light attached and operating at all times.
3. All signs shall be post mounted if closure time exceeds 12 hours.
4. $L\ (\text{min.}) = \frac{WS}{3.2}$ for speeds ≥ 70 km/h
   $= \frac{WS^2}{300}$ for speeds ≤ 60 km/h
   Where:
   W = Width of lateral transition in meters.
   S = Posted speed limit (converted to km/h).
5. Arrows denote direction of traffic only and do not reflect pavement markings.
6. Longitudinal dimensions are to be adjusted to fit field conditions. See Index No. 600.
7. END CONSTRUCTION signs required only when work exceeds one daylight period.
8. When a side road intersects the highway on which work is being performed additional traffic control devices shall be erected in accordance with other applicable TCZ Indexes.
9. For general TCZ requirements and additional information refer to Index No. 600.

STATE OF FLORIDA DEPARTMENT OF TRANSPORTATION
ROAD DESIGN

MULTILANE DIVIDED • RURAL

	Names	Dates
Designed By		
Drawn By		12/87
Checked By		12/87

Approved By Charles A. Scott
State Traffic Plans Engineer

Revision No.	Sheet No.	Index No.
94	1 of 2	616

F.H.W.A. Approved:

EXISTING POSTED SPEED	PROPOSED WORK ZONE SPEED	SI Units EXISTING POSTED SPEED	SI Units PROPOSED WORK ZONE SPEED
MPH	MPH	km/h	km/h
65	45	110	70
55	35 or 45	90	60 or 70
45	35	70	60

REMARKS

The 'Proposed Work Zone Speeds' are recommended speeds for the traffic control plan detailed below; however, where the Engineer deems other speeds are appropriate, the applicable speeds are to be shown on the plans.

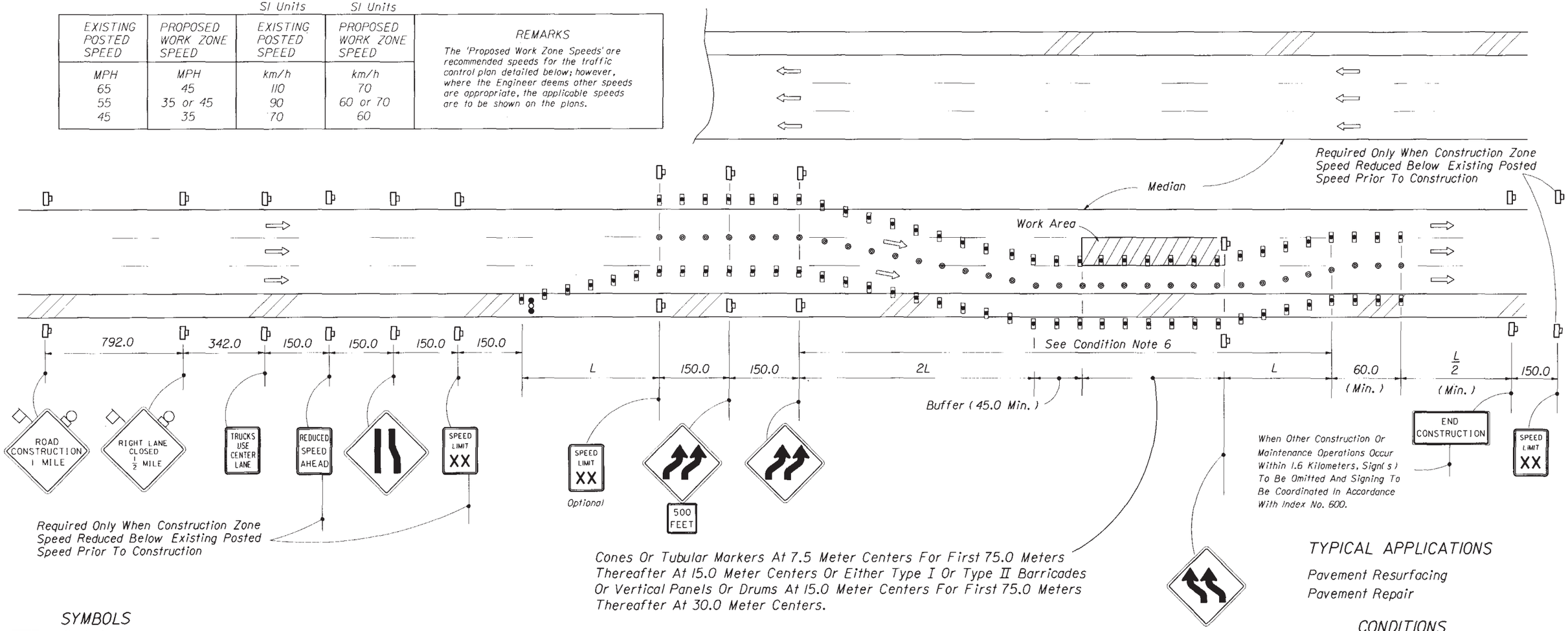

TYPICAL APPLICATIONS

Pavement Resurfacing
Pavement Repair

CONDITIONS

WHERE ANY VEHICLE, EQUIPMENT, WORKERS OR THEIR ACTIVITIES ENCROACH ON ANY PORTION OF A CENTER LANE OF A MULTILANE HIGHWAY, AND TWO DRIVING LANES ARE MAINTAINED, AND, THE OUTSIDE SHOULDER PAVEMENT IS TEMPORARILY USED AS A TRAVEL LANE.

SYMBOLS

- Work Area
- Sign With 450 mm x 450 mm (Min.) Orange Flag And Type B Light
- Type I Or Type II Barricade Or Vertical Panel Or Drum (With Steady Burning Light At Night Only). Tubular Markers May Be Used During Daylight Only. Cones May Be Used During Daylight And As Permitted At Night.
- Work Zone Sign
- Advance Warning Arrow Panel
- Cone Or Tubular marker (Except At Night Use Vertical Panels)

CONDITION NOTES

1. See General Notes, Sheet 1 of 2.
2. Maximum spacing between devices (m) to be equal to the speed limit (km/h) but not greater than 7.5 m for cones or tubular markers or 15.0 m for Type I or Type II barricades or or vertical panels or drums.

   Barricades, vertical panels or drums shall be used to delineate the edge lines of the transition areas (i.e. L and 2L). Beyond the transition area, any of the above noted devices may be used to delineate the edge lines.

   Cones or tubular markers shall be used to delineate the center line. (Except at night use vertical panels)
3. Length of time that traffic is using shoulder should be minimized. For example, remove lane closure and lane shift at night (unless performing nightwork) if practical.
4. The RIGHT LANE CLOSED, lane reduction and reverse curve signs are to be removed or fully covered when no work is being performed and the travel way is open to traffic.
5. When the lane closure exceeds a continuous 24 hour period all existing pavement markings within the realignment which conflict with the revised traffic pattern are to be removed and removable pavement markings used for marking new edge lines and centerlines.
6. For general TCZ requirements and additional information refer to Index No. 600.

STATE OF FLORIDA DEPARTMENT OF TRANSPORTATION
ROAD DESIGN

MULTILANE DIVIDED • RURAL

	Names	Dates
Designed By		6/89
Drawn By		6/89
Checked By		6/89

Approved By Clark G. Scott
State Traffic Plans Engineer

F.H.W.A. Approved:	Revision No.	Sheet No.	Index No.
	94	2 of 2	616

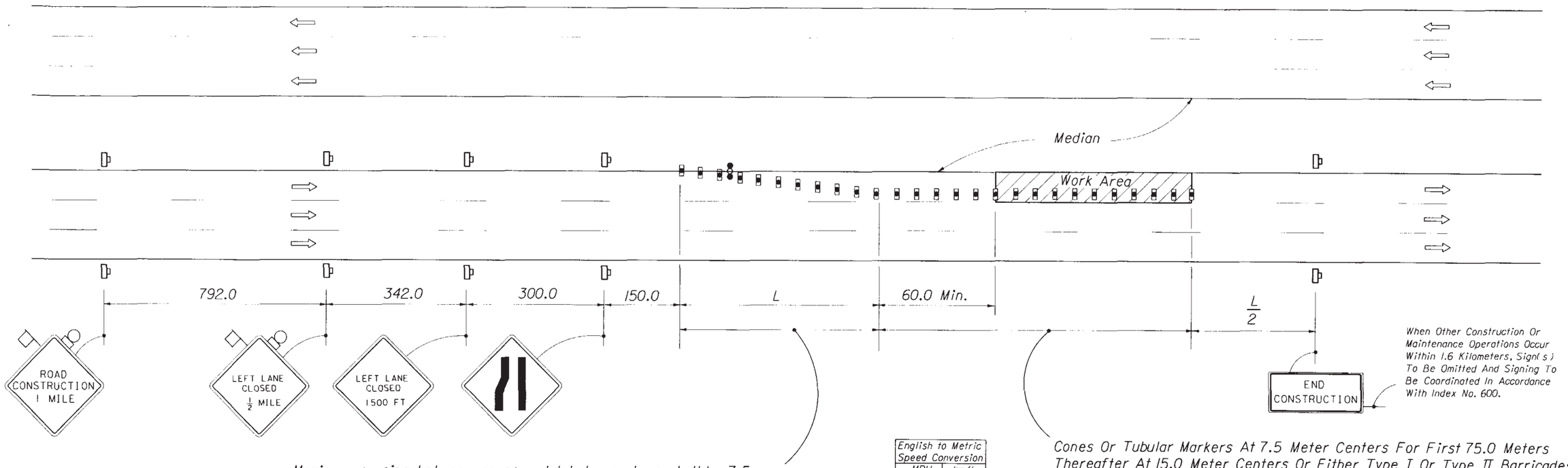

When Other Construction Or Maintenance Operations Occur Within 1.6 Kilometers, Sign(s) To Be Omitted And Signing To Be Coordinated In Accordance With Index No. 600.

Maximum spacing between cones and tubular markers shall be 7.5 m. Maximum spacing between Type I or Type II barricades or vertical panels or drums shall be based on the speed limit as follows: 5.0 m up to 25 MPH; 10.0 m for 30 MPH - 40 MPH; 15.0 m for 45 MPH and greater.

English to Metric Speed Conversion	
MPH	km/h
65	110
60	100
55	90
50	80
45	70
40	60
35	60
30	50

Cones Or Tubular Markers At 7.5 Meter Centers For First 75.0 Meters Thereafter At 15.0 Meter Centers Or Either Type I Or Type II Barricades Or Vertical Panels Or Drums At 15.0 Meter Centers For First 75.0 Meters Thereafter At 30.0 Meter Centers.

SYMBOLS

- Work Area
- Sign With 450 mm x 450 mm (Min.) Orange Flag And Type B Light
- Type I Or Type II Barricade Or Vertical Panel Or Drum (With Steady Burning Light At Night Only). Tubular Markers May Be Used During Daylight Only. Cones May Be Used During Daylight And As Permitted At Night.
- Work Zone Sign
- Advance Warning Arrow Panel

GENERAL NOTES

1. All vehicles, equipment, workers and their activities are restricted at all times to one side of the highway.
2. The first two warning signs, each side, shall have a 450 mm x 450 mm (min.) orange flag and a type B light attached and operating at all times.
3. Mesh signs may be used for (Daylight Only) operations Type B Lights and Orange Flags are not required.
4. All signs shall be post mounted if closure time exceeds 12 hours.
5. $L\ (\text{min.}) = \frac{WS}{3.2}$ for speeds $\geq$ 70 km/h
   $= \frac{WS^2}{300}$ for speeds $\leq$ 60 km/h
   Where:
   W = Width of lateral transition in meters.
   S = Posted speed limit (converted to km/h).
6. The LEFT LANE CLOSED and lane reduction signs are to be removed or fully covered when no work is being performed and the inside lane is open to traffic.
7. Advance warning arrow panels are required for both day and night operation. Either the right flashing arrow or the right sequential arrow modes may be used; the caution mode shall not be used.
8. Arrows denote direction of traffic only and do not reflect pavement marking.
9. Longitudinal dimensions are to be adjusted to fit field conditions. See Index No. 600.
10. When a side road intersects the highway on which work is being performed additional traffic control devices shall be erected in accordance with other applicable TCZ Indexes.
11. For work performed in the outside lane refer to Indexes Nos. 612 and 613.
12. For general TCZ requirements and additional information refer to Index No. 600.

CONDITIONS

WHERE ANY VEHICLE, EQUIPMENT, WORKERS OR THEIR ACTIVITIES WILL ENCROACH ON ANY PORTION OF THE INSIDE LANE OF A MULTILANE HIGHWAY

STATE OF FLORIDA DEPARTMENT OF TRANSPORTATION
ROAD DESIGN

TRAFFIC CONTROL THROUGH WORK ZONES

MULTILANE DIVIDED • RURAL

	Names	Dates
Designed By		12/87
Drawn By		12/87
Checked By		12/87

Approved By Clark G. Scott
State Traffic Plans Engineer

F.H.W.A. Approved:	Revision No.	Sheet No.	Index No.
	94	1 of 1	617

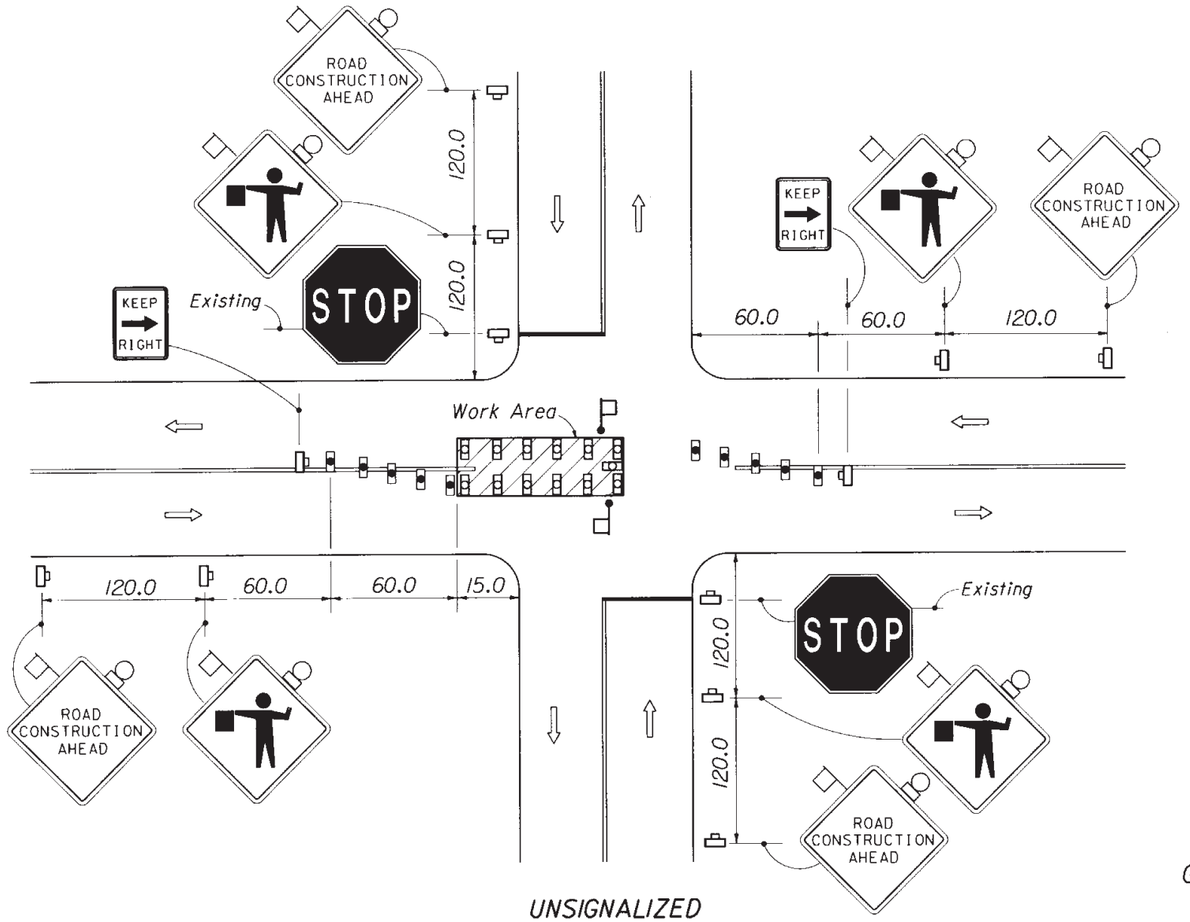

UNSIGNALIZED

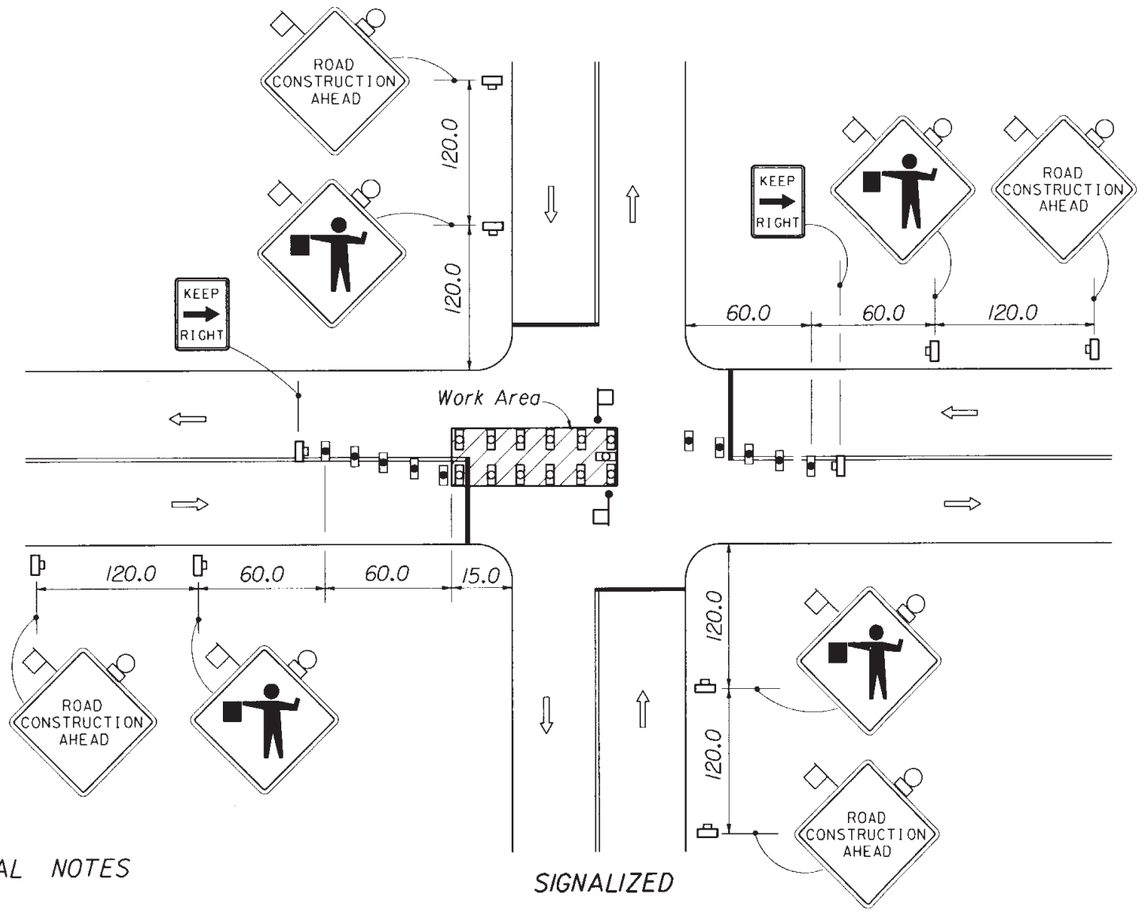

SIGNALIZED

SYMBOLS

- Work Area
- Sign With 450 mm x 450 mm (Min.) Orange Flag And Type B Light
- Type I Or Type II Barricade Or Vertical Panel Or Drum (With Steady Burning Light At Night Only). Tubular Markers May Be Used During Daylight Only. Cones May Be Used During Daylight And As Permitted At Night.
- Type I Or Type II Barricade Or Vertical Panel Or Drum (with Flashing Light At Night Only)
- Work Zone Sign
- Flagger
- Stop Bar

GENERAL NOTES

1. All vehicles, equipment, workers(except flaggers) and their activities are forbidden in lane and intersection areas reserved for traffic.
2. The first two warning signs shall have a 450 mm x 450 mm (min.) orange flag and a Type B light attached and operating at all times.
   Mesh signs may be used for (Daylight Only) operations
   Type B Lights and Orange Flags are not required.
3. The FLAGGER legend sign may be substituted for the symbol sign.
4. All signs shall be post mounted if closure time exceeds 12 hours.
5. When vehicles in a parking zone block the line of sight to TCZ signs or when TCZ signs encroach on a normal pedestrian walkway, the signs shall be post mounted and located in accordance with Index No. 17302.
6. Flaggers shall be located where they can control more than one direction of traffic.

   Flaggers shall be in sight of each other or in direct communication at all times.
7. Maximum spacing between barricades, vertical panels, cones, tubular markers and drums shall be not greater than 7.5 meters.
8. Arrows denote direction of traffic only and do not reflect pavement markings.
9. Longitudinal dimensions are to be adjusted to fit field conditions. See Index No. 600.
10. Temporary signal phasing modifications are to be approved by the District Traffic Operations Engineer prior to the beginning of work.
11. Work performed for a period of 60 minutes or less is to be conducted in accordance with Index No. 607.
12. For general TCZ requirements and additional information refer to index No. 600.

TYPICAL APPLICATIONS

Utility Work

Pavement Repair

CONDITIONS

WHERE ANY VEHICLE, EQUIPMENT, WORKERS OR THEIR ACTIVITIES ENCROACH ON THE PAVEMENT REQUIRING THE CLOSURE OF A PORTION OF ONE OR MORE TRAFFIC LANES IN AN INTERSECTION FOR A PERIOD OF MORE THAN 60 MINUTES

STATE OF FLORIDA DEPARTMENT OF TRANSPORTATION
ROAD DESIGN

TRAFFIC CONTROL THROUGH WORK ZONES

TWO-LANE, TWO-WAY • URBAN DAY OR NIGHT OPERATIONS

	Names	Dates	
Designed By		12/87	Approved By Clark A. Scott, State Traffic Plans Engineer
Drawn By		12/87	
Checked By		12/87	Revision No. 94 / Sheet No. 1 of 1 / Index No. 620
F.H.W.A. Approved:			

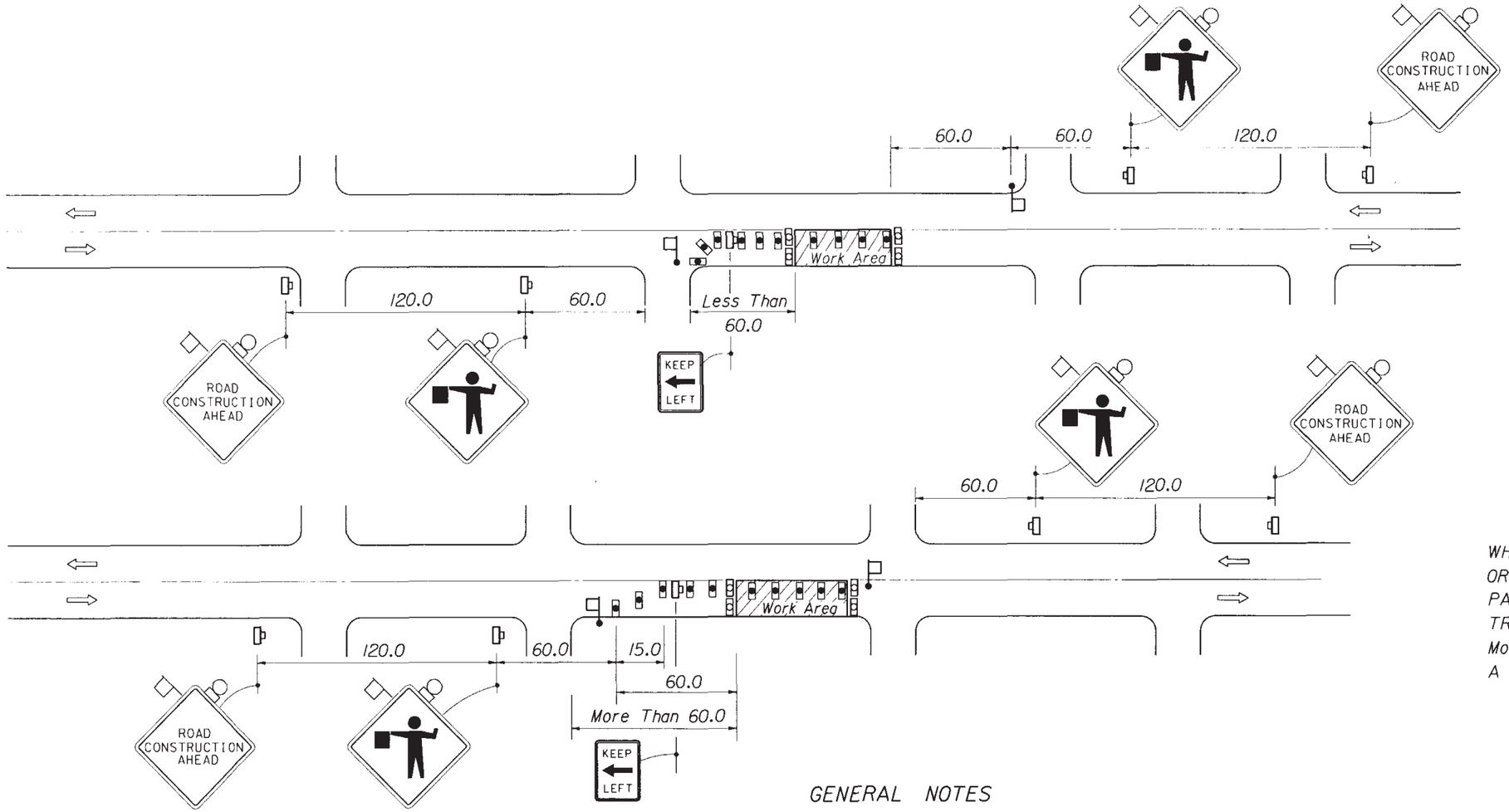

CONDITIONS

WHERE ANY VEHICLE, EQUIPMENT, WORKERS OR THEIR ACTIVITIES ENCROACH ON THE PAVEMENT REQUIRING THE CLOSURE OF ONE TRAFFIC LANE, FOR WORK AREA LESS THAN 60.0 m DOWNSTREAM FROM INTERSECTION, For A PERIOD OF MORE THAN 60 MINUTES.

CONDITIONS

WHERE ANY VEHICLE, EQUIPMENT, WORKERS OR THEIR ACTIVITIES ENCROACH ON THE PAVEMENT REQUIRING THE CLOSURE OF ONE TRAFFIC LANE, FOR WORK AREA 60.0 m OR More DOWNSTREAM FROM INTERSECTION, For A PERIOD OF MORE THAN 60 MINUTES.

SYMBOLS

- Work Area
- Sign With 450 mm x 450 mm (Min.) Orange Flag And Type B Light
- Type I Or Type II Barricade Or Vertical Panel Or Drum (With Steady Burning Light At Night Only). Tubular Markers May Be Used During Daylight Only. Cones May Be Used During Daylight And As Permitted At Night.
- Type I Or Type II Barricade Or Vertical Panel Or Drum (with Flashing Light At Night Only)
- Work Zone Sign
- Flagger

GENERAL NOTES

1. Work operations shall be confined to one travel lane, leaving the opposing travel lane open to traffic.
2. All vehicles, equipment, workers (except flaggers) and their activities are restricted at all times to one side of the pavement.
3. For work operations of 60 minutes or less see Index No. 607
4. When vehicles in a parking zone block the line of sight to TCZ signs or when TCZ signs encroach on a normal pedestrian walkway, the signs shall be post mounted and located in accordance with Index No. 17302.
5. If work area is confined to an outside auxiliary lane the work area shall be barricaded and the FLAGGER signs replaced by ROAD CONSTRUCTION AHEAD signs. Flaggers are not required.
6. Flaggers shall be in sight of each other or in direct communication at all times.
7. The ROAD CONSTRUCTION AHEAD and FLAGGER signs shall have a 450 mm x 450 mm (min.) orange flag and a Type B light attached and operating at all times.

   Mesh signs may be used for (Daylight Only) operations Type B Lights and Orange Flags are not required.
8. The FLAGGER legend sign may be substituted for the symbol sign.
9. All signs shall be post mounted if the closure time exceeds 12 hours.
10. The maximum spacing between devices shall be not greater than 7.5 meters.
11. Arrows denote direction of traffic only and do not reflect pavement markings.
12. Longitudinal dimensions are to be adjusted to fit field conditions See Index No. 600.
13. For general TCZ requirements and additional information refer to Index No. 600.

TYPICAL APPLICATIONS

Utility Work
Pavement Repair
Structure Adjustments

STATE OF FLORIDA DEPARTMENT OF TRANSPORTATION
ROAD DESIGN

TRAFFIC CONTROL THROUGH WORK ZONES

TWO-LANE, TWO-WAY • URBAN DAY OR NIGHT OPERATIONS

	Names	Dates
Designed By		12/87
Drawn By		12/87
Checked By		12/87

Approved By Clark A. Scott
State Traffic Plans Engineer

Revision No.	Sheet No.	Index No.
94	1 of 1	621

F.H.W.A. Approved:

SYMBOLS

- Work Area
- Sign With 450 mm x 450 mm (Min.) Orange Flag And Type B Light
- Type I Or Type II Barricade Or Vertical Panel Or Drum (With Steady Burning Light At Night Only). Tubular Markers May Be Used During Daylight Only. Cones May Be Used During Daylight And As Permitted At Night.
- Type I Or Type II Barricade Or Vertical Panel Or Drum (with Flashing Light At Night Only)
- Work Zone Sign
- Stop Bar
- Advance Warning Arrow Panel

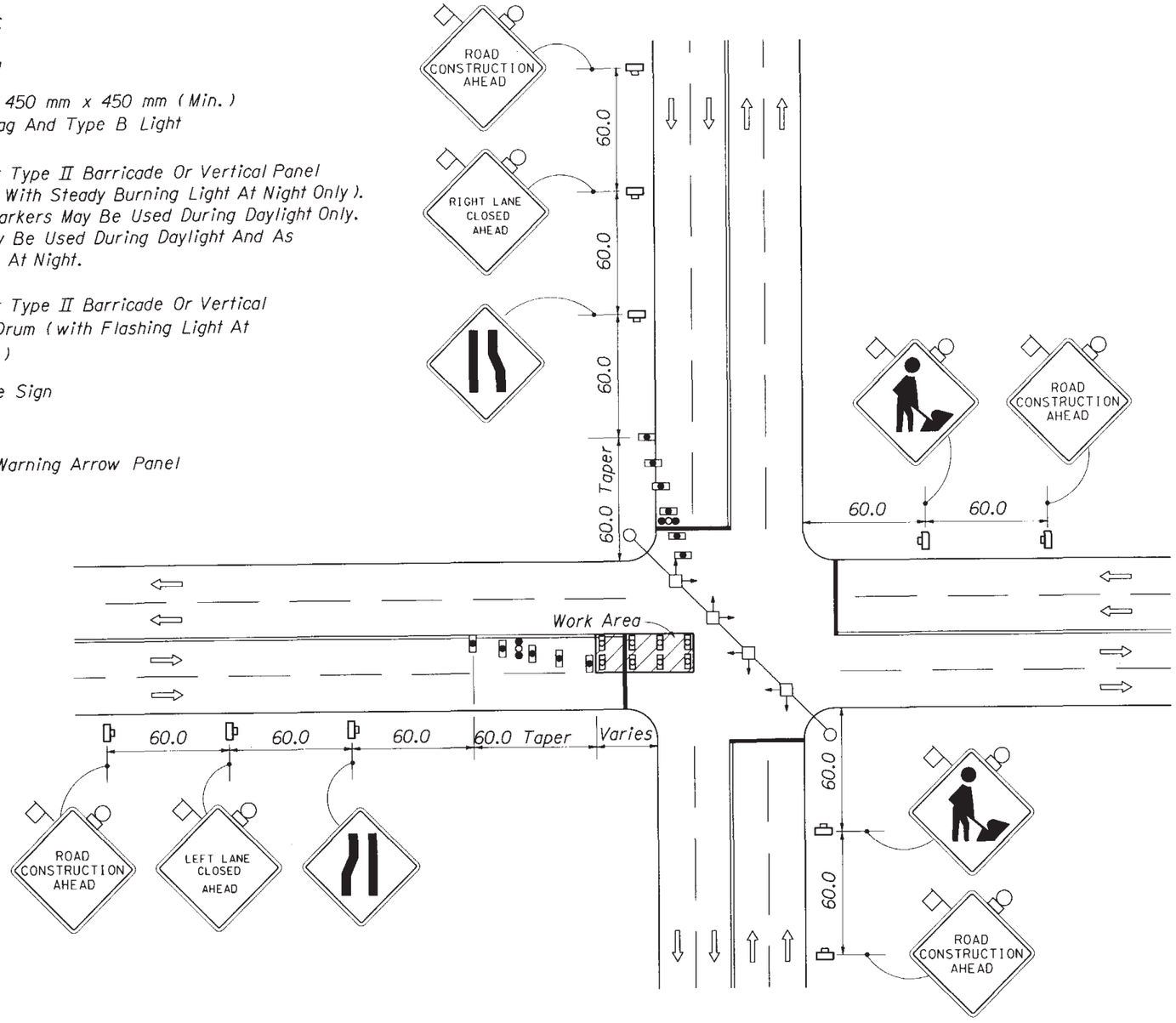

SIGNALIZED

GENERAL NOTES

1. All vehicles, equipment, workers (except flaggers) and their activities are forbidden in lane and intersection areas reserved for traffic.
2. For work operations of 60 minutes or less see Index No. 607.
3. The first two warning signs shall have a 450 mm x 450 mm (min.) orange flag and a Type B light attached and operating at all times.

   Mesh signs may be used for (Daylight Only) operations Type B Lights and Orange Flags are not required.
4. All signs shall be post mounted if closure time exceeds 12 hours.
5. The WORKERS legend sign may be substituted for the symbol sign.
6. Dual signs are required for divided roadways.
7. Arrows denote direction of traffic only and do not reflect pavement markings.
8. Maximum spacing between barricades, vertical panels, cones, tubular markers and drums shall be not greater than 7.5 m.
9. Temporary signal phasing modifications are to be approved by the District Traffic Operations Engineer prior to the beginning of work.
10. Work performed for a period of 60 minutes or less is to be conducted in accordance with Index No. 607 or emergency condition procedures as described in Index No. 600, whichever applies.
11. Longitudinal dimensions are to be adjusted to fit field conditions. See Index No. 600.
12. For general TCZ requirements and additional information refer to Index No. 600.

TYPICAL APPLICATIONS

Utility Work
Pavement Repair
Structure Adjustments

CONDITIONS

WHERE ANY VEHICLE, EQUIPMENT, WORKERS OR THEIR ACTIVITIES ENCROACH ON THE PAVEMENT REQUIRING THE CLOSURE OF AT LEAST ONE MEDIAN TRAFFIC LANE FOR A PERIOD OF MORE THAN 60 MINUTES

STATE OF FLORIDA DEPARTMENT OF TRANSPORTATION
ROAD DESIGN

TRAFFIC CONTROL THROUGH WORK ZONES

MULTILANE, TWO-WAY • URBAN DIVIDED OR UNDIVIDED DAY OR NIGHT OPERATION

	Names	Dates	Approved By
Designed By		12/87	Charles A. Scott, State Traffic Plans Engineer
Drawn By		12/87	
Checked By		12/87	

F.H.W.A. Approved:	Revision No.	Sheet No.	Index No.
	94	1 of 1	622

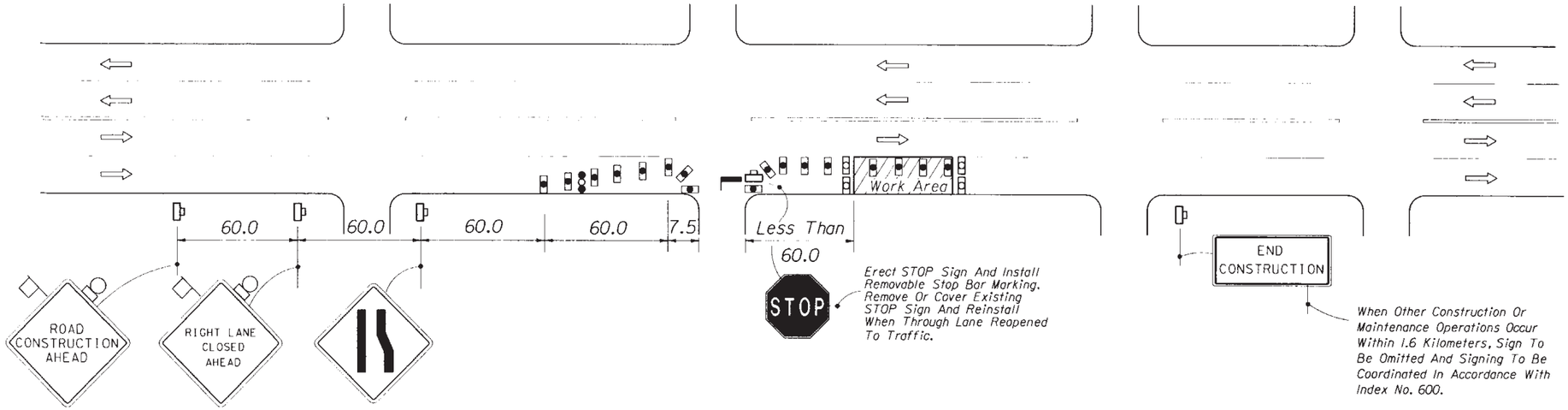

CONDITIONS

WHERE ANY VEHICLE, EQUIPMENT, WORKERS OR THEIR ACTIVITIES ENCROACH ON THE PAVEMENT REQUIRING THE CLOSURE OF THE OUTSIDE TRAVEL LANE, AND/OR ADJOINING AUXILIARY LANE, FOR WORK AREA LESS THAN 60.0 m FROM INTERSECTION, FOR A PERIOD OF MORE THAN 60 MINUTES.

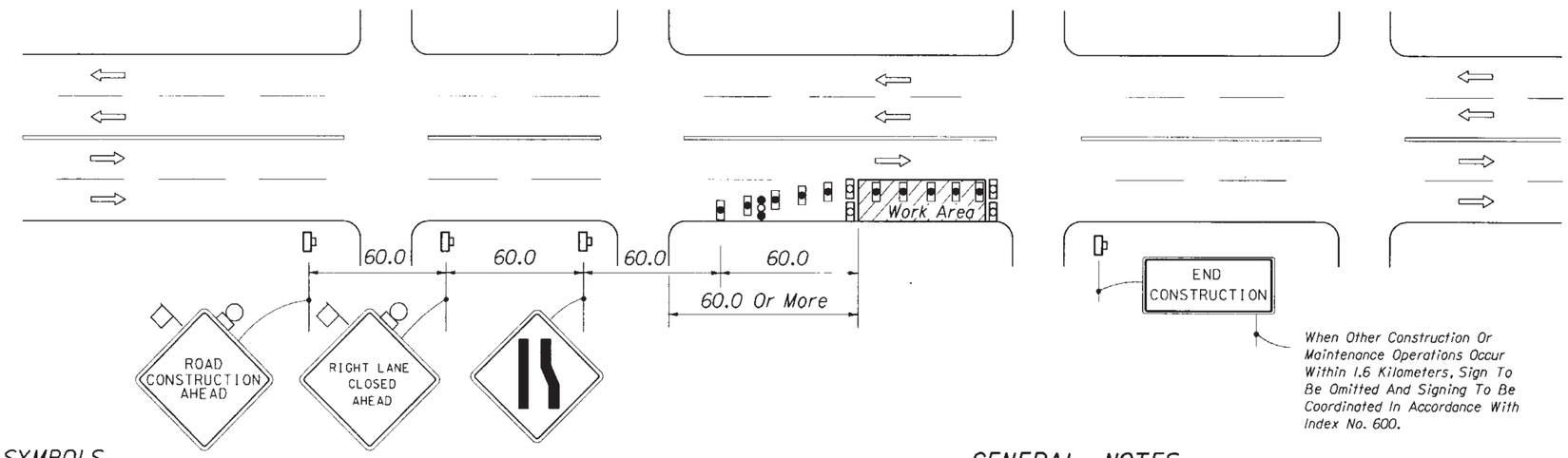

CONDITIONS

WHERE ANY VEHICLE, EQUIPMENT, WORKERS OR THEIR ACTIVITIES ENCROACH ON THE PAVEMENT REQUIRING THE CLOSURE OF THE OUTSIDE TRAVEL LANE AND/OR ADJOINING AUXILIARY LANE, FOR WORK AREA 60.0 m OR MORE FROM INTERSECTION, FOR A PERIOD OF MORE THAN 60 MINUTES.

SYMBOLS

- Work Area
- Sign With 450 mm x 450 mm (Min.) Orange Flag And Type B Light
- Type I Or Type II Barricade Or Vertical Panel Or Drum (With Steady Burning Light At Night Only). Tubular Markers May Be Used During Daylight Only. Cones May Be Used During Daylight And As Permitted At Night.
- Type I Or Type II Barricade Or Vertical Panel Or Drum (with Flashing Light At Night Only)
- Work Zone Sign
- Advance Warning Arrow Panel
- Stop Bar

GENERAL NOTES

1. All vehicles, equipment, workers (except flaggers) and their activities are restricted at all times to one side of the roadway.
2. Work operations shall be confined to either one lane or lane combinations as follows:
   (a) Outside travel lane (b) Outside auxiliary lane
   (c) Outside travel lane and adjoining auxiliary lane
   (d) Inside travel lane△ (e) Inside auxiliary lane△
   (f) Inside travel lane and adjoining auxiliary lane△
   △ See Sheet 2 Of 2

   If the work area is confined to an auxiliary lane the work area shall be barricaded and the RIGHT (LEFT) LANE CLOSED AHEAD signs replaced by ROAD CONSTRUCTION AHEAD signs, and the merge symbol signs eliminated.
3. For work operations of 60 minutes or less see Index No. 612.
4. When vehicles in a parking zone block the line of sight to TCZ signs or when TCZ signs encroach on a normal pedestrian walkway, the signs shall be post mounted and located in accordance with Index No. 17302.
5. The first two warning signs shall have a 450 mm x 450 mm (min.) orange flag and a Type B light attached and operating at all times.

   Mesh signs may be used for (Daylight Only) operations Type B Lights and Orange Flags are not required.
6. All signs shall be post mounted if the closure times exceeds 12 hours.
7. Dual signs are required for divided roadways.

(Continued)

TYPICAL APPLICATIONS

Utility Work
Pavement Repairs
Structure Adjustments

STATE OF FLORIDA DEPARTMENT OF TRANSPORTATION
ROAD DESIGN

TRAFFIC CONTROL THROUGH WORK ZONES

MULTILANE, TWO-WAY • URBAN DIVIDED OR UNDIVIDED DAY OR NIGHT OPERATIONS

	Names	Dates
Designed By		12/87
Drawn By		12/87
Checked By		12/87

Approved By Clark A. Scott
State Traffic Plans Engineer

F.H.W.A. Approved:	Revision No.	Sheet No.	Index No.
	94	1 of 2	623

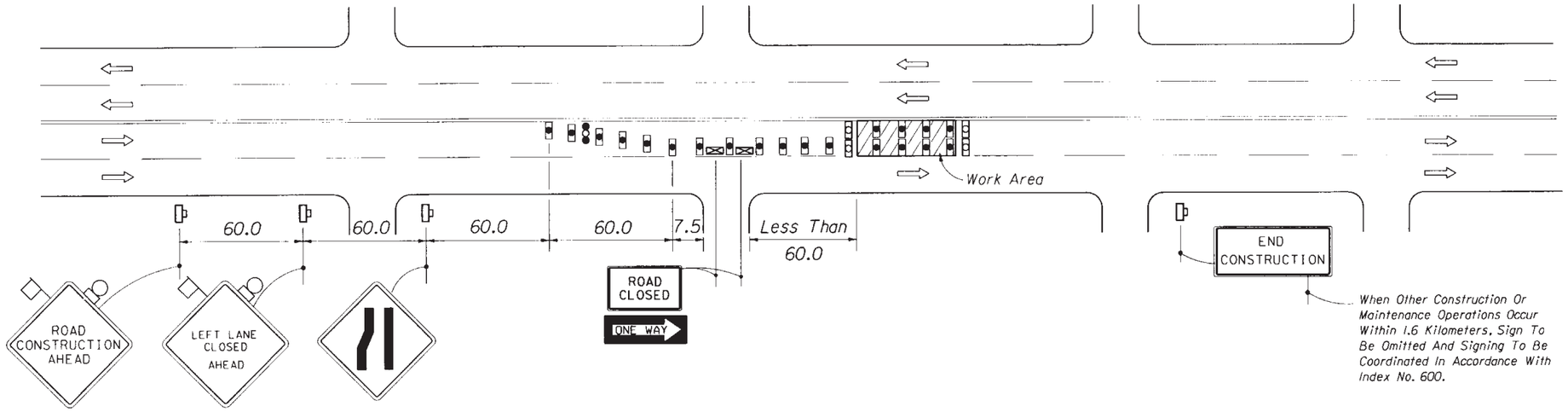

CONDITIONS

WHERE ANY VEHICLE, EQUIPMENT, WORKERS OR THEIR ACTIVITIES ENCROACH ON THE PAVEMENT REQUIRING THE CLOSURE OF THE INSIDE TRAVEL LANE AND/OR ADJOINING AUXILIARY LANE, FOR WORK AREA LESS THAN 60.0 m FROM INTERSECTION, FOR A PERIOD OF MORE THAN 60 MINUTES.

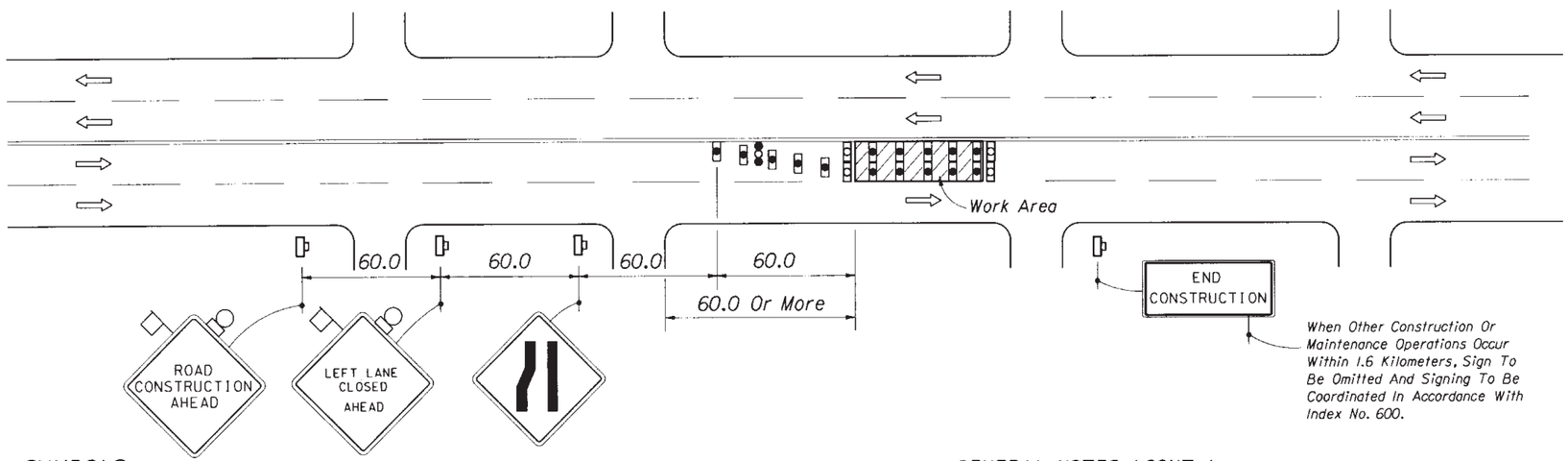

CONDITIONS

WHERE ANY VEHICLE, EQUIPMENT, WORKERS OR THEIR ACTIVITIES ENCROACH ON THE PAVEMENT REQUIRING THE CLOSURE OF THE INSIDE TRAVEL LANE AND/OR ADJOINING AUXILIARY LANE, FOR WORK AREA 60.0 m OR MORE FROM INTERSECTION, FOR A PERIOD OF MORE THAN 60 MINUTES.

SYMBOLS

- Work Area
- Sign With 450 mm x 450 mm (Min.) Orange Flag And Type B Light
- Type I Or Type II Barricade Or Vertical Panel Or Drum (With Steady Burning Light At Night Only). Tubular Markers May Be Used During Daylight Only. Cones May Be Used During Daylight And As Permitted At Night.
- Type I Or Type II Barricade Or Vertical Panel Or Drum (with Flashing Light At Night Only)
- Type III Barricade
- Work Zone Sign
- Advance Warning Arrow Panel

GENERAL NOTES (CONT.)

8. Within the lateral transitions, the maximum spacing between cones and tubular markers shall be 7.5 meters. Maximum spacing between Type I or Type II barricades or vertical panels or drums shall be based on the speed limit as follows: 5.0 meters up to 25 MPH; 10.0 meters for 30 MPH-40 MPH; 15.0 meters for 45 MPH or greater.
   Spacing for devices parallel to the travel lanes shall be 7.5 meter centers for cones or tubular markers and 15.0 meter Centers for Type I or Type II barricades or vertical panels or drums for 75.0 meters, thereafter cones or tubular markers at 15.0 meter centers and type I or Type II barricades or vertical panels or drums at 30.0 meter centers.
9. Arrows denote direction of traffic only and do not reflect pavement markings.
10. Longitudinal dimensions are to be adjusted to fit field conditions. See Index No. 600.
11. For general TCZ requirements and additional information refer to Index No. 600.

TYPICAL APPLICATIONS

Utility Work
Pavement Repairs
Structure Adjustments

STATE OF FLORIDA DEPARTMENT OF TRANSPORTATION
ROAD DESIGN

TRAFFIC CONTROL THROUGH WORK ZONES

MULTILANE, TWO-WAY • URBAN DIVIDED OR UNDIVIDED DAY OR NIGHT OPERATIONS

	Names	Dates	Approved By
Designed By		12/87	Clark A Scott
Drawn By		12/87	State Traffic Plans Engineer
Checked By		12/87	

F.H.W.A. Approved:	Revision No.	Sheet No.	Index No.
	94	2 of 2	623

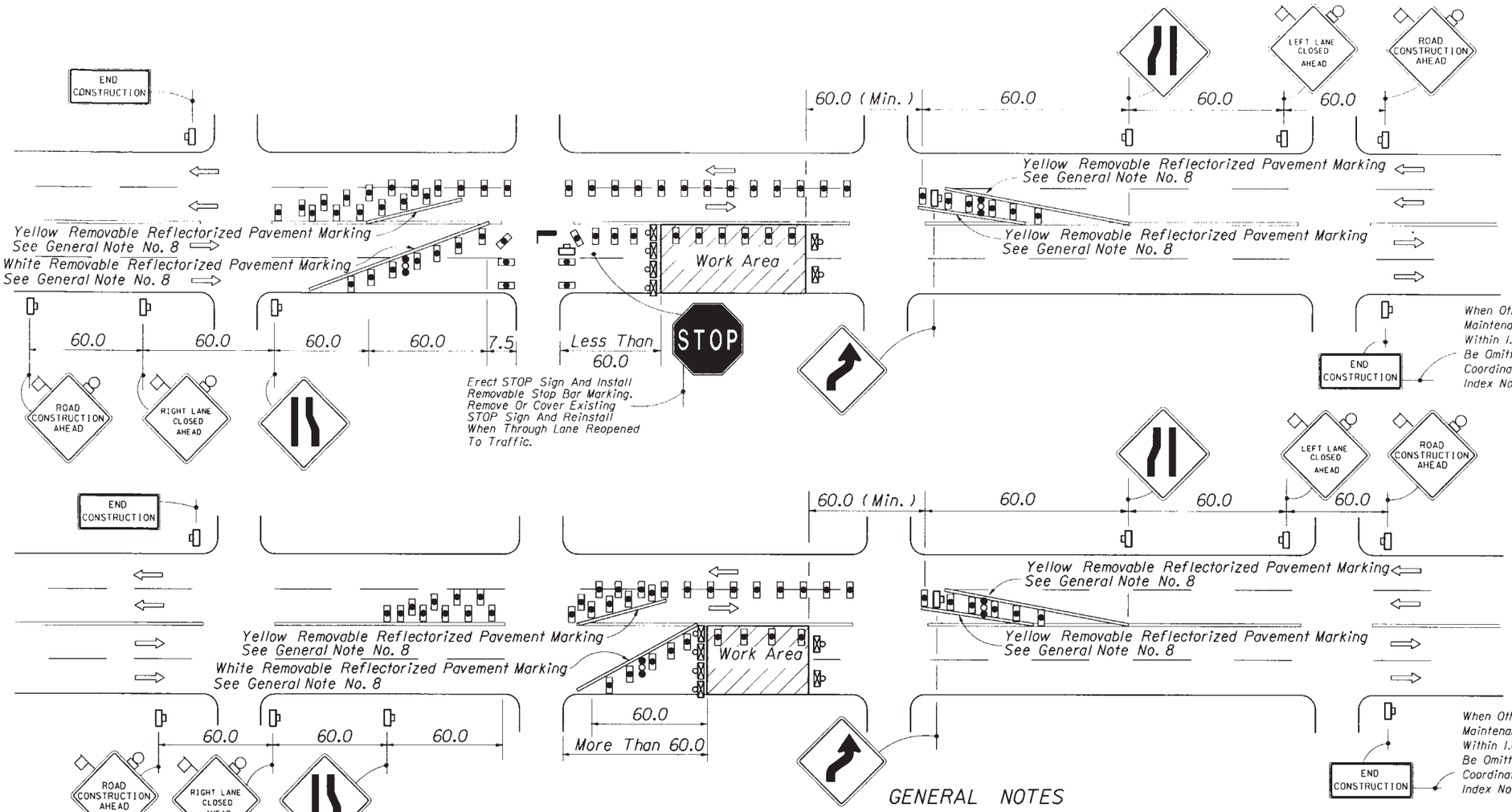

CONDITIONS

WHERE ANY VEHICLE, EQUIPMENT, WORKERS OR THEIR ACTIVITIES ENCROACH ON THE PAVEMENT REQUIRING THE CLOSURE OF TRAFFIC LANES IN ONE DIRECTION AND THE USE OF ONE OPPOSING TRAFFIC LANE TO MAINTAIN TWO-WAY TRAFFIC, FOR WORK AREA LESS THAN 60.0 m FROM INTERSECTION, FOR A PERIOD OF MORE THAN 60 MINUTES.

CONDITIONS

WHERE ANY VEHICLE, EQUIPMENT, WORKERS OR THEIR ACTIVITIES ENCROACH ON THE PAVEMENT REQUIRING THE CLOSURE OF TRAFFIC LANES IN ONE DIRECTION AND THE USE OF ONE OPPOSING TRAFFIC LANE TO MAINTAIN TWO-WAY TRAFFIC, FOR WORK AREA 60.0 m OR MORE FROM INTERSECTION, FOR A PERIOD OF MORE THAN 60 MINUTES.

SYMBOLS

- Work Area
- Sign With 450 mm x 450 mm (Min.) Orange Flag And Type B Light
- Type I Or Type II Barricade Or Vertical Panel Or Drum (With Steady Burning Light At Night Only). Tubular Markers May Be Used During Daylight Only. Cones May Be Used During Daylight And As Permitted At Night.
- Type III Barricade (With Flashing Light)
- Work Zone Sign
- Advance Warning Arrow Panel
- Stop Bar

GENERAL NOTES

1. All vehicles, equipment, workers and their activities are restricted at all times to one side of the pavement.
2. For work operations of 60 minutes of less (daylight only) see Index No. 607.
3. When vehicles in a parking zone block the line of sight to TCZ signs or when TCZ signs encroach on a normal pedestrian walkway, the signs shall be post mounted and located in accordance with Index No. 17302.
4. The first two warning signs shall have a 450 mm x 450 mm (min.) Orange flag and a Type B light attached and operating at all times .
   Mesh signs may be used for (Daylight Only) operations
   Type B Lights and Orange Flags are not required.
5. All signs shall be post mounted if the closure time exceeds 12 hours.
6. Dual signs are required for divided roadways.
7. Channelizing devices are to be spaced with cones or tubular markers at 7.5 meter centers and Type I or Type II barricades or vertical panels or drums at 15.0 meter centers, except in tangent work areas spacing may be increased to 15.0 meter centers for cones or tubular markers and 30.0 meters for barricades or vertical panels or drums after the first 75.0 meters when approved by the Engineer.
8. Removable reflectorized pavement markings shall be used when closure time exceeds one daylight period.
9. Arrows denote direction of traffic only and do not reflect pavement markings.
10. Longitudinal dimensions are to be adjusted to fit field conditions. See Index No. 600.
11. For general TCZ requirements and additional information refer to Index No. 600.

TYPICAL APPLICATIONS

Utility Work
Pavement Repair
Structure Adjustments

STATE OF FLORIDA DEPARTMENT OF TRANSPORTATION
ROAD DESIGN

TRAFFIC CONTROL THROUGH WORK ZONES

MULTILANE DIVIDED WITH TRAVERSABLE MEDIAN OR UNDIVIDED • URBAN DAY OR NIGHT OPERATIONS

	Names	Dates	Approved By
Designed By		12/87	State Traffic Plans Engineer
Drawn By		12/87	
Checked By		12/87	
F.H.W.A. Approved:			

Revision No.	Sheet No.	Index No.
94	1 of 1	624

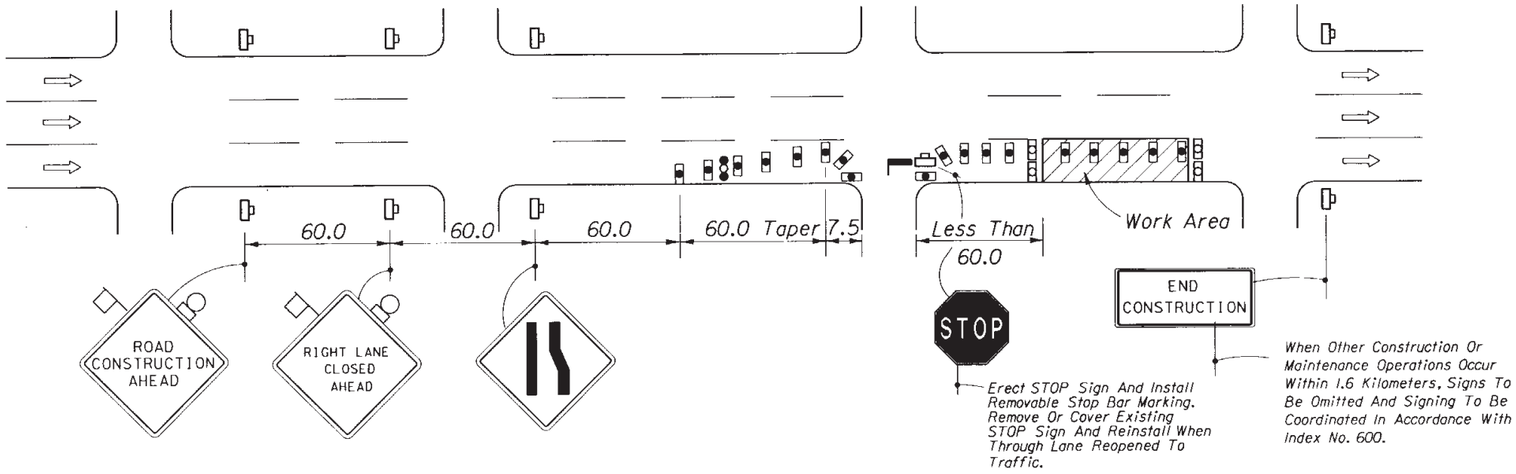

CONDITIONS

WHERE ANY VEHICLE, EQUIPMENT, WORKERS OR THEIR ACTIVITIES ENCROACH ON THE PAVEMENT REQUIRING THE CLOSURE OF EITHER THE OUTSIDE OR THE MEDIAN TRAVEL LANE AND/OR ADJOINING AUXILIARY LANE, FOR WORK AREA LESS THAN 60.0 m FROM INTERSECTION, FOR A PERIOD OF MORE THAN 60 MINUTES.

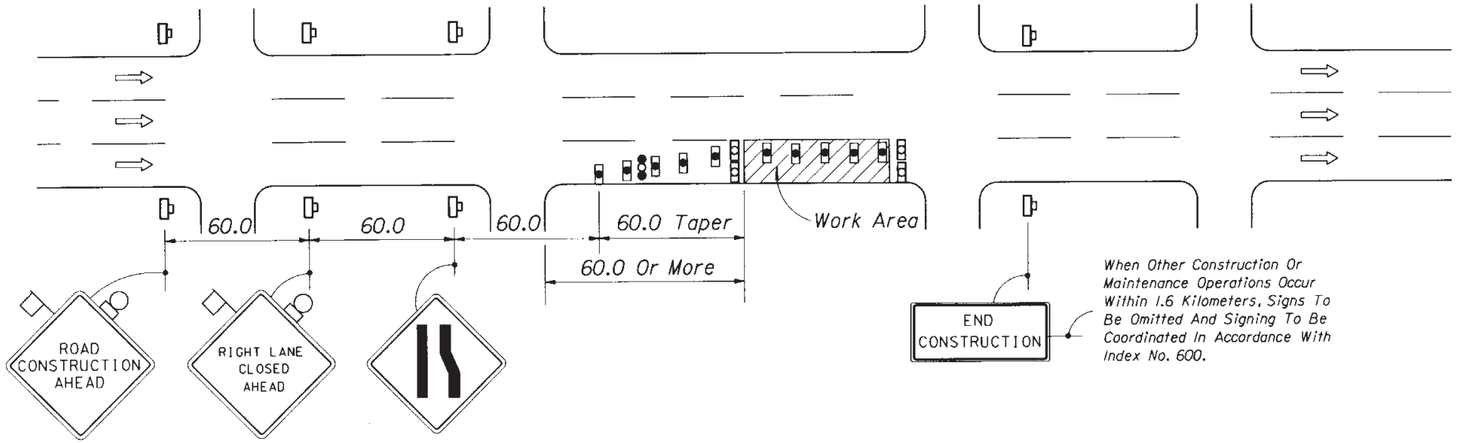

CONDITIONS

WHERE ANY VEHICLE, EQUIPMENT, WORKERS OR THEIR ACTIVITIES ENCROACH ON THE PAVEMENT REQUIRING THE CLOSURE OF EITHER THE OUTSIDE OR THE MEDIAN TRAVEL LANE AND/OR ADJOINING AUXILIARY LANE, FOR WORK AREA 60.0 m OR MORE FROM INTERSECTION, FOR A PERIOD OF MORE THAN 60 MINUTES.

SYMBOLS

- Work Area
- Sign With 450 mm x 450 mm (Min.) Orange Flag And Type B Light
- Type I Or Type II Barricade Or Vertical Panel Or Drum (With Steady Burning Light At Night Only). Tubular Markers May Be Used During Daylight Only. Cones May Be Used During Daylight And As Permitted At Night.
- Type I Or Type II Barricade Or Vertical Panel Or Drum (with Flashing Light At Night Only)
- Work Zone Sign
- Advance Warning Arrow Panel
- Stop Bar

GENERAL NOTES

1. All vehicles, equipment, workers and their activities are restricted at all times to one side of the pavement.

2. Work operations shall be confined to either one lane or a combination of lanes as follows:
   (a) Outside travel lane (b) Outside auxiliary lane
   (c) Outside travel lane and adjoining auxiliary lane
   (d) Outside travel lane and adjoining center lane
   (e) Outside travel lane and adjoining auxiliary and center lanes
   (f) Median travel lane Δ (g) Median auxiliary lane Δ
   (h) Median travel lane and adjoining auxiliary lane Δ
   (i) Median travel lane and adjoining center lane Δ
   (j) Median travel lane and adjoining auxiliary and center lanes Δ
   Δ See Sheet 2 Of 2

   If the work area is confined to an auxiliary lane the work area shall be barricaded and the RIGHT LANE CLOSED AHEAD signs replaced by ROAD CONSTRUCTION AHEAD signs and the merge left symbol signs eliminated.

3. For work operations, that require a single lane closure only, of 60 minutes or less see Index No. 612.

4. When vehicles in a parking zone block the line of sight to TCZ signs or when TCZ signs encroach on a normal pedestrian walkway, the signs shall be post mounted and located in accordance with Index No. 17302.

5. When work is performed in the median lane or the median and adjoining center lanes the barricading plans are inverted and LEFT LANE CLOSED AHEAD and merge right symbol signs shall be substituted for the RIGHT LANE CLOSED AHEAD and merge left symbol signs.

   If work is confined to the median auxiliary lane the work area shall be barricaded and the LEFT LANE CLOSED AHEAD signs replaced by ROAD CONSTRUCTION AHEAD signs and the merge right symbol signs eliminated.

6. The first two warning signs, each side, shall have a 450 mm x 450 mm (min.) orange flag and a Type B light attached and operating at all times.

   Mesh signs may be used for (Daylight Only) operations Type B Lights and Orange Flags are not required.

(Continued)

TYPICAL APPLICATIONS

Utility Work
Pavement Repair
Structure Adjustments

STATE OF FLORIDA DEPARTMENT OF TRANSPORTATION
ROAD DESIGN

TRAFFIC CONTROL THROUGH WORK ZONES

MULTILANE ONE-WAY OR MULTILANE DIVIDED WITH NON-TRAVERSABLE MEDIAN • URBAN DAY OR NIGHT OPERATIONS

	Names	Dates	Approved By Clark A Scott State Traffic Plans Engineer
Designed By		12/87	
Drawn By		12/87	
Checked By		12/87	

F.H.W.A. Approved:	Revision No.	Sheet No.	Index No.
	94	1 of 2	625

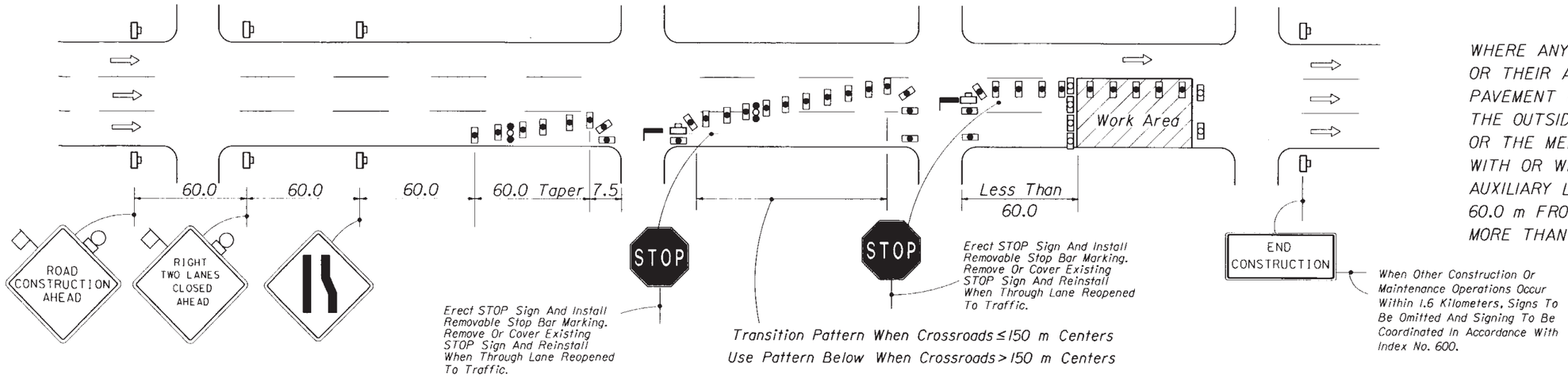

CONDITIONS

WHERE ANY VEHICLE, EQUIPMENT, WORKERS OR THEIR ACTIVITIES ENCROACH ON THE PAVEMENT REQUIRING THE CLOSURE OF EITHER THE OUTSIDE AND CENTER TRAVEL LANES OR THE MEDIAN AND CENTER TRAVEL LANES, WITH OR WITHOUT CLOSURE OF ADJOINING AUXILIARY LANES, FOR WORK AREA LESS THAN 60.0 m FROM INTERSECTION, FOR A PERIOD OF MORE THAN 60 MINUTES.

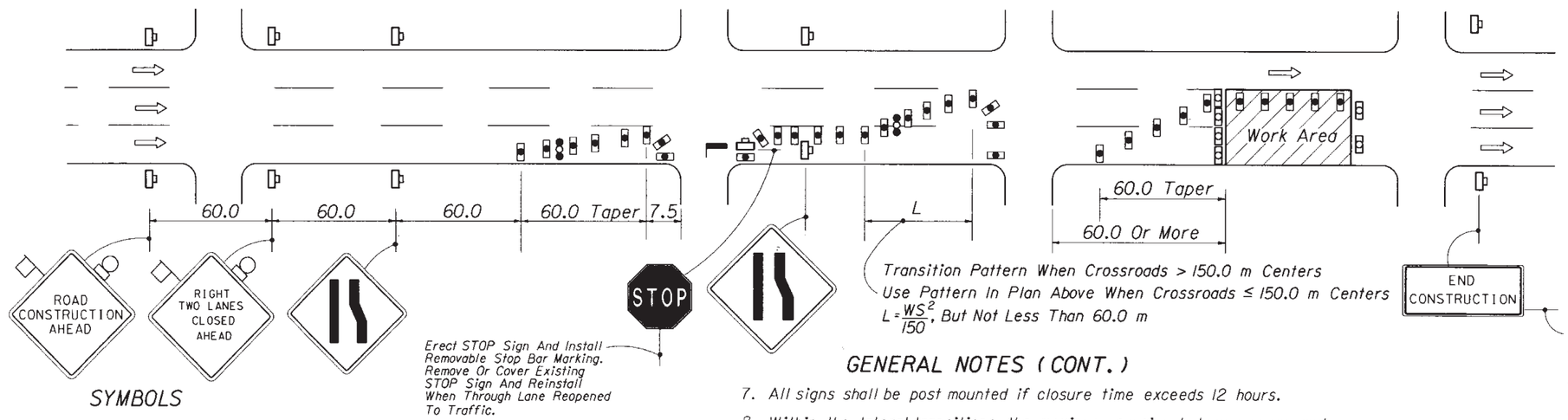

CONDITIONS

WHERE ANY VEHICLE, EQUIPMENT, WORKERS OR THEIR ACTIVITIES ENCROACH ON THE PAVEMENT REQUIRING THE CLOSURE OF EITHER THE OUTSIDE AND CENTER TRAVEL LANES OR THE MEDIAN AND CENTER TRAVEL LANES, WITH OR WITHOUT CLOSURE OF ADJOINING AUXILIARY LANES, FOR WORK AREA 60.0 m OR MORE FROM INTERSECTION, FOR A PERIOD OF MORE THAN 60 MINUTES.

SYMBOLS

- Work Area
- Sign With 450 mm x 450 mm (Min.) Orange Flag And Type B Light
- Type I Or Type II Barricade Or Vertical Panel Or Drum (With Steady Burning Light At Night Only). Tubular Markers May Be Used During Daylight Only. Cones May Be Used During Daylight And As Permitted At Night.
- Type I Or Type II Barricade Or Vertical Panel Or Drum (with Flashing Light At Night Only)
- Work Zone Sign
- Advance Warning Arrow Panel
- Stop Bar

GENERAL NOTES (CONT.)

7. All signs shall be post mounted if closure time exceeds 12 hours.
8. Within the lateral transitions, the maximum spacing between cones and tubular markers shall be 7.5 meters. Maximum spacing between Type I or Type II barricades or vertical panels or drums shall be based on the speed limit as follows: 5.0 meters up to 25 MPH; 10.0 meters for 30 MPH-40 MPH; 15.0 meters for 45 MPH or greater.
   Spacing for devices parallel to the travel lanes shall be 7.5 m centers for cones or tubular markers and 15.0 m centers for Type I or Type II barricades or vertical panels or drums for 75.0 m thereafter cones or tubular markers at 15.0 m centers and type I or Type II barricades or vertical panels or drums at 30.0 m centers.
9. Arrows denote direction of traffic only and do not reflect pavement markings.
10. Longitudinal dimensions are to be adjusted to fit field conditions. See Index No. 600.
11. For general TCZ requirements and additional information refer to Index No. 600.

English to Metric Speed Conversion

MPH	km/h
65	110
60	100
55	90
50	80
45	70
40	60
35	60
30	50

TYPICAL APPLICATIONS

Utility Work
Pavement Repair
Structure Adjustments

STATE OF FLORIDA DEPARTMENT OF TRANSPORTATION
ROAD DESIGN

TRAFFIC CONTROL THROUGH WORK ZONES
MULTILANE ONE-WAY OR MULTILANE DIVIDED WITH NON-TRAVERSABLE MEDIAN • URBAN DAY OR NIGHT OPERATIONS

	Names	Dates
Designed By		12/87
Drawn By		12/87
Checked By		12/87

Approved By Charles A. Scott
State Traffic Plans Engineer

F.H.W.A. Approved:	Revision No.	Sheet No.	Index No.
	94	2 of 2	625

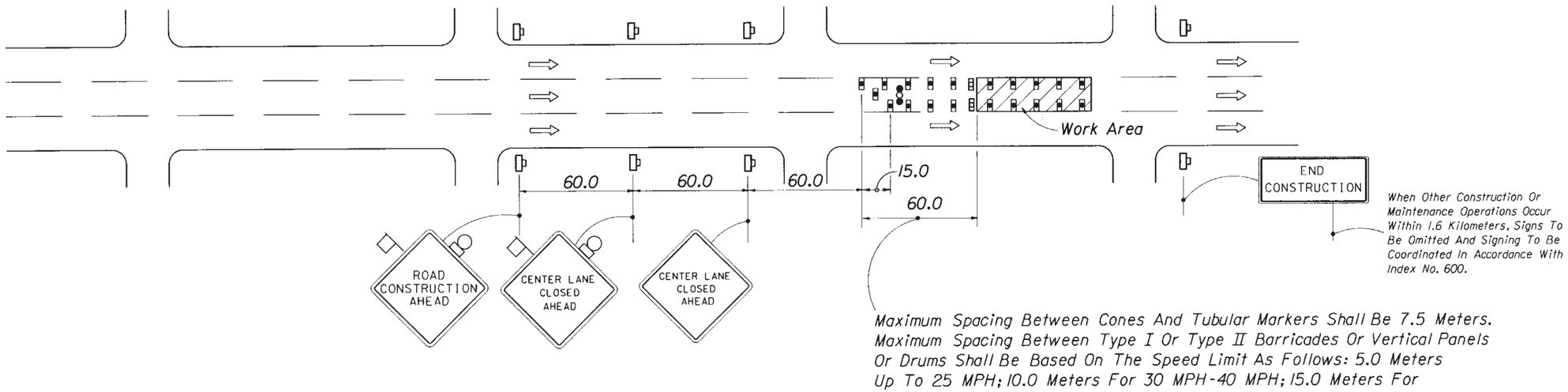

SYMBOLS

- Work Area
- Sign With 450 mm x 450 mm (Min.) Orange Flag And Type B Light
- Type I Or Type II Barricade Or Vertical Panel Or Drum (With Steady Burning Light At Night Only). Tubular Markers May Be Used During Daylight Only. Cones May Be Used During Daylight And As Permitted At Night.
- Type I Or Type II Barricade Or Vertical Panel Or Drum (with Flashing Light At Night Only)
- Work Zone Sign
- Advance Warning Arrow Panel

GENERAL NOTES

1. All vehicles, equipment, workers and their activities are prohibited at all times from the lane areas reserved for traffic.
2. Work operations shall be confined to one center travel lane, leaving the adjacent travel lanes open to traffic.
3. For work operations of 60 minutes or less see Index No. 612
4. When vehicles in a parking zone block the line of sight to TCZ signs or when TCZ signs encroach on a normal pedestrian walkway, the signs shall be post mounted and located in accordance with Index No. 17302.
5. The first two warning signs, each side, shall have a 450 mm x 450 mm orange flag and a Type B light attached and operating at all times.

   Mesh signs may be used for (Daylight Only) operations Type B Lights and Orange Flags are not required.
6. All signs shall be post mounted if the closure time exceeds 12 hours.
7. Advance warning arrow panel is required for both day and night operations.
8. Channelizing devices are to be spaced with cones or tubular markers at 7.5 m centers Type I or Type II barricades or vertical panels or drums at 15.0 m centers for the first 75.0 m, thereafter cones or tubular markers at 15.0 m centers and Type I or Type II barricades or vertical panels or drums at 30.0 m centers.
9. Arrows denote direction of traffic only and do not reflect pavement markings.
10. Longitudinal dimensions are to be adjusted to fit field conditions. See Index No. 600.
11. For general TCZ requirements and additional information refer to Index No. 600.

TYPICAL APPLICATIONS

Utility Work
Pavement Repair
Structure Adjustments

CONDITIONS

WHERE ANY VEHICLE, EQUIPMENT, WORKERS OR THEIR ACTIVITIES ENCROACH ON THE PAVEMENT REQUIRING THE CLOSURE OF THE CENTER LANE.

STATE OF FLORIDA DEPARTMENT OF TRANSPORTATION
ROAD DESIGN

TRAFFIC CONTROL THROUGH WORK ZONES

MULTILANE ONE-WAY OR MULTILANE DIVIDED WITH NON-TRAVERSABLE MEDIAN • URBAN DAY OR NIGHT OPERATIONS

	Names	Dates
Designed By		12/87
Drawn By		12/87
Checked By		12/87

Approved By Clark A. Scott
State Traffic Plans Engineer

Revision No.	Sheet No.	Index No.
94	1 of 1	626

F.H.W.A. Approved:

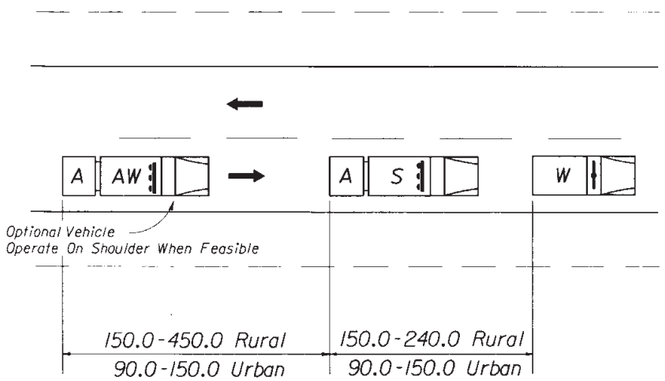

MODE • WARNING

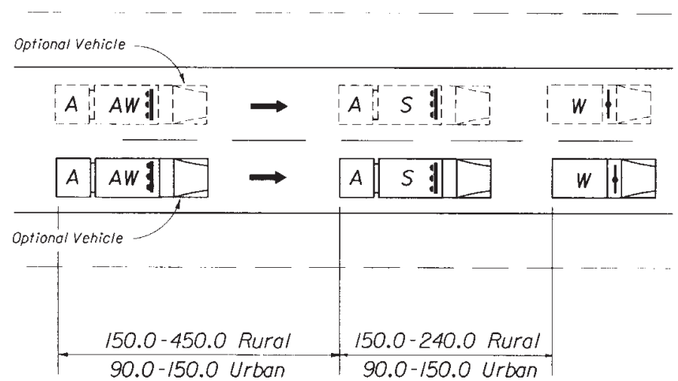

MODE • PASS LEFT RIGHT

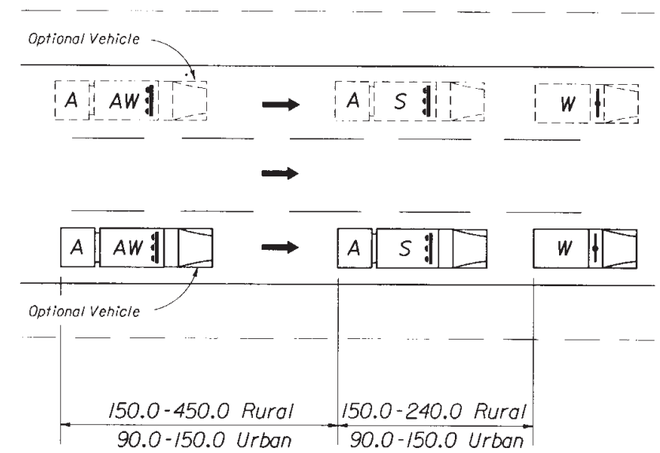

MODE • PASS LEFT RIGHT

MOVING OPERATIONS

GENERAL NOTES

1. These illustrations are representative of general conditions. Conditions differing from those shown shall be treated as directed by the Engineer.
2. The intensity of light and the position of panels shall be as specified in Index No. 600.
3. The Advance Warning Vehicle (Optional) may be used at the direction of the Engineer. If an Advance Warning Vehicle is operated within the travel way, an approved Truck Mounted Attenuator will be required on the Advance Warning Vehicle but not required on the Shadow Vehicle. The Advance Warning Arrow Panel and Warning Sign are required on both the Advance Warning and Shadow Vehicles.
4. For general TCZ requirements and additional information refer to Index No. 600.
5. If the work vehicle speed exceeds the minimum legal speed limit on limited access facilities and one half the posted speed limit on other facilities the engineer in charge may delete requirements for shadow vehicle and attenuators. The work vehicle will be required to have an advance warning arrow panel and warning sign.

TYPICAL APPLICATIONS

Striping
RPM Placement
Vegetation Control

CONDITIONS

MOVING OPERATION

SYMBOLS

W — Work Vehicle With Flashing Beacon

X — Shadow (S) Or Advance Warning (AW) Vehicle With Advance Warning Arrow Panel And Warning Sign.

A — Truck Mounted Attenuator (TMA)

→ Lane Identification And Direction Of Traffic

STATE OF FLORIDA DEPARTMENT OF TRANSPORTATION
ROAD DESIGN

TRAFFIC CONTROL THROUGH WORK ZONES

MOVING OPERATIONS

	Names	Dates
Designed By		12/87
Drawn By		12/87
Checked By		12/87

Approved By Clark A Scott
State Traffic Plans Engineer

Revision No.	Sheet No.	Index No.
94	1 of 1	627

F.H.W.A. Approved:

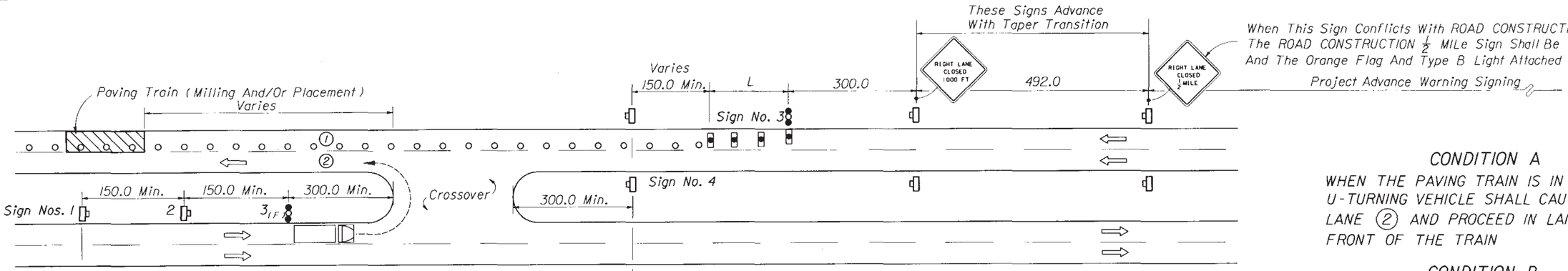

When the median width is too narrow for trucks to make turns into Lane No. 2, Signs Nos. 1, 2, 3 & 4 shall be moved ahead to a crossover in advance of the paving lane taper. Project advance warning signs (not shown upper right) shall be located in advance of the relocated Sign No. 4.

CONDITION A

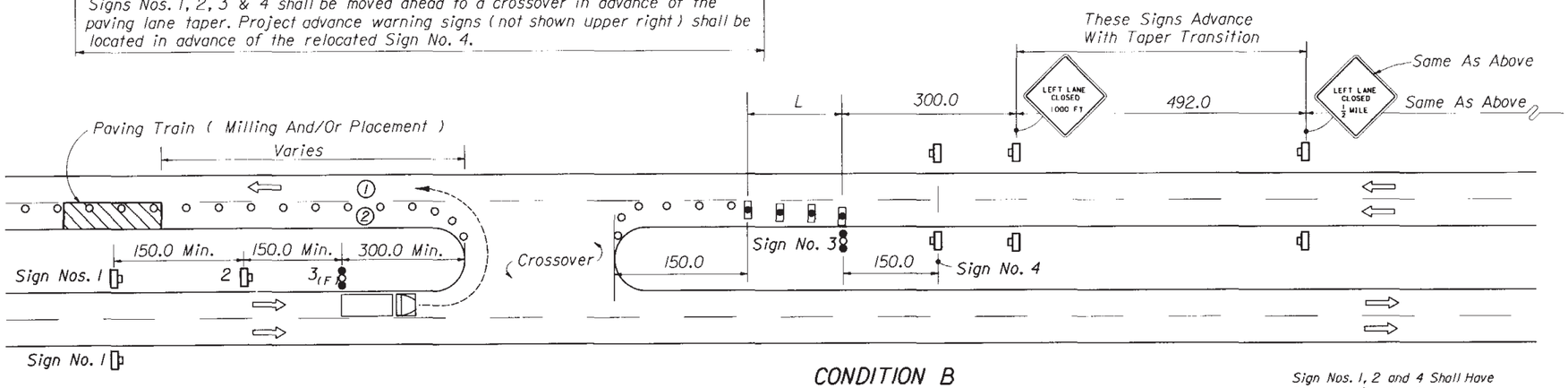

CONDITION B

CONDITION A

WHEN THE PAVING TRAIN IS IN LANE (1) THE U-TURNING VEHICLE SHALL CAUTIOUSLY TURN INTO LANE (2) AND PROCEED IN LANE (2) TO THE FRONT OF THE TRAIN

CONDITION B

WHEN THE PAVING TRAIN IS IN LANE (2) THE U-TURNING VEHICLE SHALL CAUTIOUSLY TURN INTO LANE (1), AND PROCEED IN LANE (1) TO THE FRONT OF THE PAVING TRAIN

CONDITION A & B

THE ADVANCE WARNING ARROW PANELS ARE REQUIRED. UNDER NO CIRCUMSTANCES WILL THE TRAFFIC TRANSITION BE LOCATED WITHIN THE LIMITS OF THE CROSSOVER

TRAFFIC TRANSITION AREA UPSTREAM FROM CROSSOVER

CASE I

SYMBOLS

- Work Area
- Type I Or Type II Barricade Or Vertical Panel Or Drum (With Steady Burning Light At Night Only). Tubular Markers May Be Used During Daylight Only. Cones May Be Used During Daylight And As Permitted At Night.
- Type I Or Type II Barricade Or Vertical Panel Or Cone Or Tubular Marker Or Drum
- Work Zone Sign
- Advance Warning Arrow Panel
- Work Vehicle
- (X) Lane Number

GENERAL NOTES

1. When crossovers do not exist, the contractor will consrtuct temporary crossovers in accordance with Index No. 517.
2. L = Length of taper in meters:
   $= \frac{WS}{3.2}$ for speeds ≥ 70 km/h
   $= \frac{WS^2}{300}$ for speeds ≤ 60 km/h
   Where:
   W = Width of lateral transition in meters.
   S = Posted speed limit (converted to km/h).
3. Within the lateral transitions, the maximum spacing between cones and tubular markers shall be 7.5 meters. Maximum spacing between Type I or Type II barricades or vertical panels or drums shall be based on the speed limit as follows: 5.0 meters up to 25 MPH; 10.0 meters for 30 MPH-40 MPH; 15.0 meters for 45 MPH or greater.
   Spacing for devices parallel to the travel lanes shall be 7.5 m centers for cones or tubular markers and 15.0 m for Type I or Type II barricades or vertical panels or drums.
4. Arrows denote direction of traffic only and do not reflect pavement markings.

English to Metric Speed Conversion	
MPH	km/h
65	110
60	100
55	90
50	80
45	70
40	60
35	60
30	50

Sign Nos. 1, 2 and 4 Shall Have Orange Reflective Backgrounds With 150 mm Series D Black Opaque Legends And 25 mm Black Opaque Borders. Orange flags and Type B lights Are Required

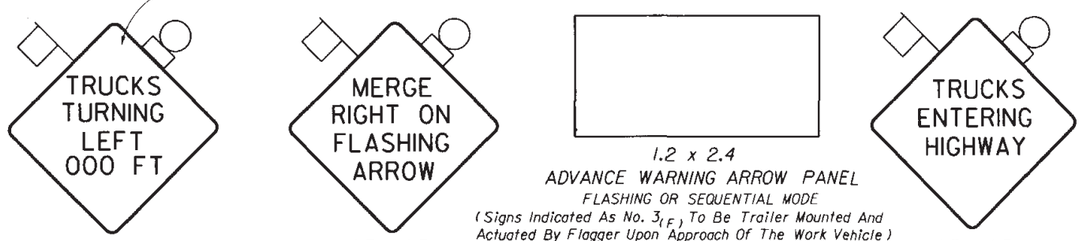

1.5 x 1.5 SIGN NO. 1

1.5 x 1.5 SIGN NO. 2

1.2 x 2.4
ADVANCE WARNING ARROW PANEL
FLASHING OR SEQUENTIAL MODE
(Signs Indicated As No. 3(F) To Be Trailer Mounted And Actuated By Flagger Upon Approach Of The Work Vehicle)
See Index No. 600 For Advance Warning Arrow Panel Details.
SIGN NO. 3

1.5 x 1.5 SIGN NO. 4

STATE OF FLORIDA DEPARTMENT OF TRANSPORTATION
ROAD DESIGN

TRAFFIC CONTROL THROUGH WORK ZONES

TEMPORARY CROSSOVER FOR PAVING TRAIN OPERATIONS • RURAL

	Names	Dates
Designed By		
Drawn By		12/87
Checked By		12/87

Approved By Clark A Scott
State Traffic Plans Engineer

Revision No.	Sheet No.	Index No.
94	1 of 2	630

F.H.W.A. Approved:

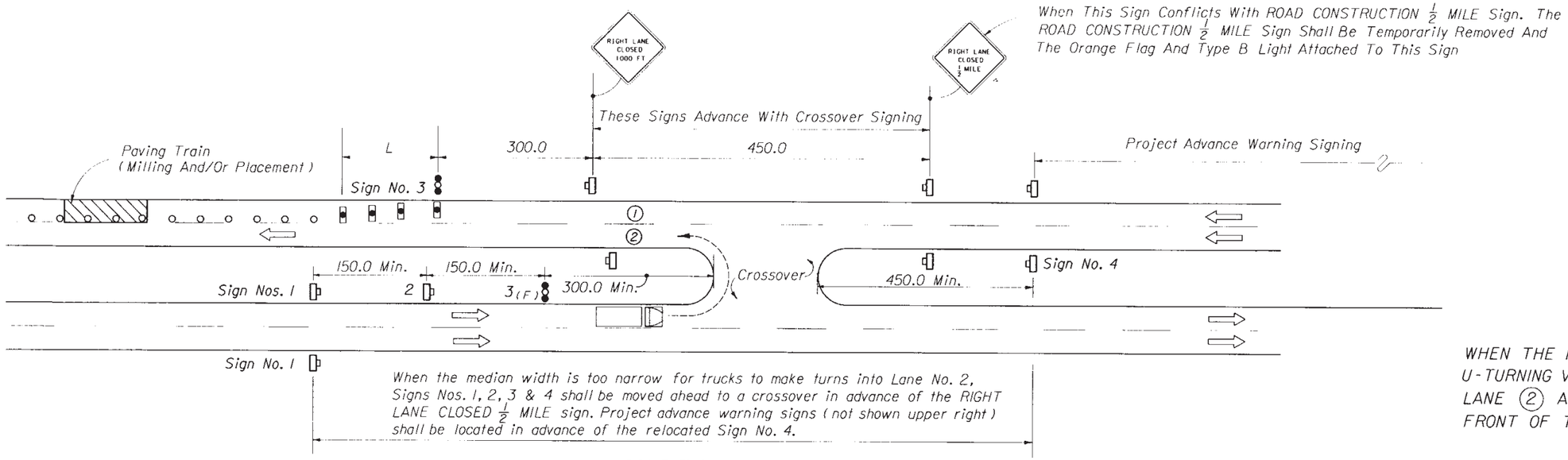

CONDITION A

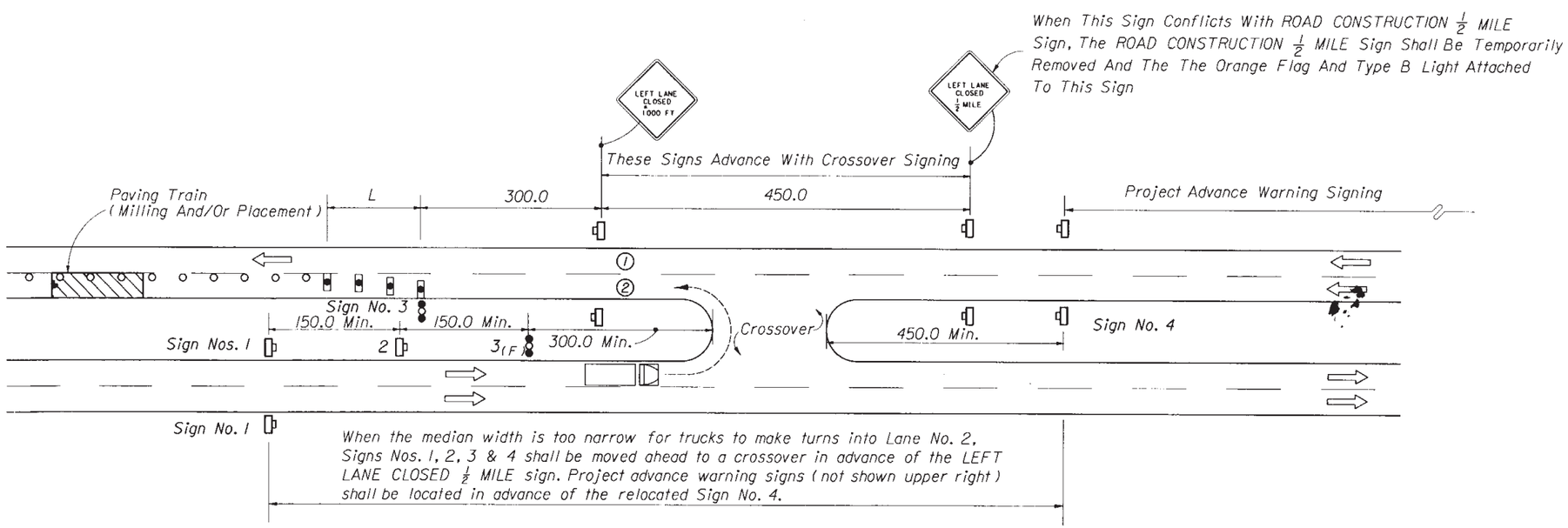

CONDITION B

TRAFFIC TRANSITION AREA DOWNSTREAM FROM CROSSOVER

CASE II

Note: See Sheet 1 of 2 For General Notes, Sign No. Details, And Conditions.

CONDITION A

WHEN THE PAVING TRAIN IS IN LANE (1) THE U-TURNING VEHICLE SHALL CAUTIOUSLY TURN INTO LANE (2) AND PROCEED IN LANE (2) TO THE FRONT OF THE TRAIN

CONDITION B

WHEN THE PAVING TRAIN IS IN LANE (2) THE U-TURNING VEHICLE SHALL TURN INTO LANE (2), CAUTIOUSLY MERGE INTO LANE (1) AND PROCEED TO THE FRONT OF THE PAVING TRAIN

CONDITION A & B

THE ADVANCE WARNING ARROW PANEL IS REQUIRED. UNDER NO CIRCUMSTANCES WILL THE TRAFFIC TRANSITION BE LOCATED WITHIN THE LIMITS OF THE CROSSOVER

STATE OF FLORIDA DEPARTMENT OF TRANSPORTATION
ROAD DESIGN

TRAFFIC CONTROL THROUGH WORK ZONES

TEMPORARY CROSSOVER FOR PAVING TRAIN OPERATIONS • RURAL

	Names	Dates
Designed By		
Drawn By		12/87
Checked By		12/87

Approved By Clark A. Scott
Deputy State Design Engineer, Roadways

F.H.W.A. Approved:	Revision No.	Sheet No.	Index No.
	94	2 of 2	630

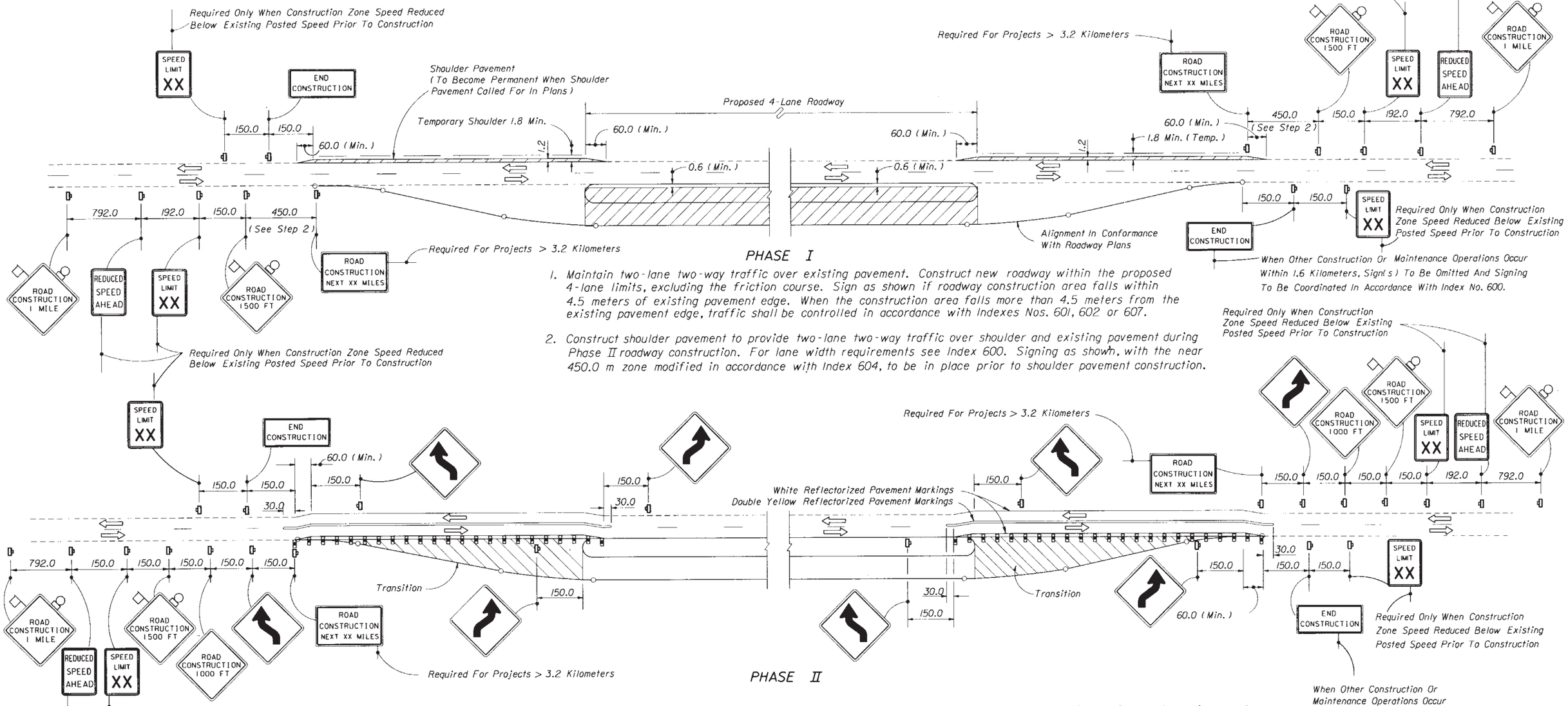

SYMBOLS

- Sign With 450 mm x 450 mm (Min.) Orange Flag And Type B Light
- Type I Or Type II Barricade Or Vertical Panel Or Drum (With Steady Burning Light At Night Only). Tubular Markers May Be Used During Daylight Only. Cones May Be Used During Daylight And As Permitted At Night.
- Work Zone Sign

Note: See Sheet 2 of 2 for General Notes.

LEGEND

- Phase I
- Phase II
- Phase III

STATE OF FLORIDA DEPARTMENT OF TRANSPORTATION
ROAD DESIGN

TRAFFIC CONTROL THROUGH WORK ZONES

CONVERTING TWO LANES TO FOUR LANES DIVIDED • RURAL

	Names	Dates
Designed By		
Drawn By		
Checked By		
F.H.W.A. Approved:		5/5/80

Approved By Charles A. Scott
State Traffic Plans Engineer

Revision No.	Sheet No.	Index No.
94	1 of 2	640

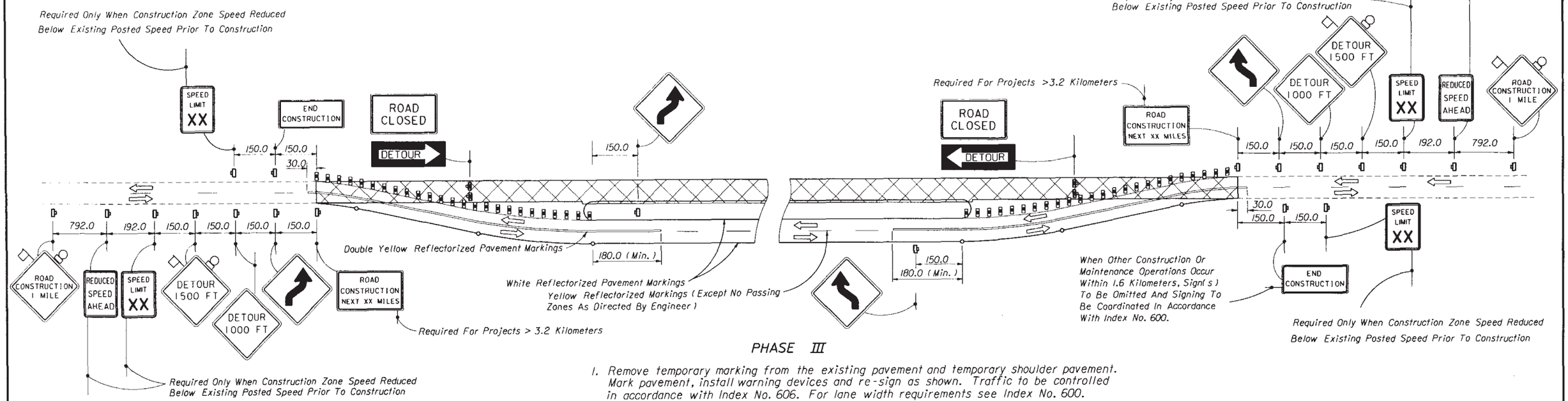

PHASE III

1. Remove temporary marking from the existing pavement and temporary shoulder pavement. Mark pavement, install warning devices and re-sign as shown. Traffic to be controlled in accordance with Index No. 606. For lane width requirements see Index No. 600.
2. Route through traffic to newly constructed roadway.
3. Resurface or reconstruct existing pavement including required shoulder pavement and friction course.

PHASE IV

1. Reroute through traffic as shown in Phase II. Signing to be as shown in Phase II.
2. Construct friction course over pavement constructed in Phases I and II

GENERAL NOTES

1. The first two warning signs shall have a 450 mm x 450 mm (min.) orange flag And a Type B light attached and operating at all times.
2. Existing signs and pavement markings that conflict with construction signing and marking shall be obliterated or removed.
3. Lane widths for maintenance of two-way traffic should desirably be equal to lane widths of the existing facility, but lanes shall be not less than 3.0 meters in width. When one-lane one-way operations are necessary, a minimum width of 3.6 meters shall be maintained and traffic controlled in accordance with Indexes Nos. 603, 604, 606 and 607. Minimum width for the temporary shoulders is 1.8 meters.
4. Within the lateral transitions, the maximum spacing between cones and tubular markers shall be 7.5 meters. Maximum spacing between Type I or Type II barricades or vertical panels or drums shall be based on the speed limit as follows: 5.0 meters up to 25 MPH; 10.0 meters for 30 MPH-40 MPH; 15.0 meters for 45 MPH or greater.

   The maximum spacing between warning devices used for delineation between the travel way and construction area to be 7.5 meters for cones or tubular markers and 15.0 meters for Type I or Type II barricades or vertical panels or drums.
5. Barricading shall be in conformance with 'Protection Requirement For Dropoffs' Index No. 600.
6. For speed sign applications see Index No. 600.
7. For reflectorized raised pavement marker application see Index no 600 and Index no 17352.
8. Additional barricades, signing, lighting or other traffic controls shall be provided for limited work areas in accordance with other applicable TCZ Indexes.
9. Arrows denote direction of traffic only and do not reflect pavement markings.
10. Longitudinal dimensions are to be adjusted to fit field conditions. See Index No. 600.
11. When a side road intersects the highway on which work is being performed additional traffic control devices shall be erected in accordance with other applicable TCZ Indexes.
12. Provisions approved by the Engineer shall be made for the removal of storm water from the roadway(s) during construction.
13. For general TCZ requirements and additional information refer to Index No. 600.

SYMBOLS

- Sign With 450 mm x 450 mm (Min.) Orange Flag And Type B Light
- Type I Or Type II Barricade Or Vertical Panel Or Drum (With Steady Burning Light At Night Only). Tubular Markers May Be Used During Daylight Only. Cones May Be Used During Daylight And As Permitted At Night.
- Type III Barricade (With Flashing Light)
- Work Zone Sign

LEGEND

- Phase I
- Phase II
- Phase III

STATE OF FLORIDA DEPARTMENT OF TRANSPORTATION
ROAD DESIGN

TRAFFIC CONTROL THROUGH WORK ZONES

CONVERTING TWO LANES TO FOUR LANES DIVIDED • RURAL

	Names	Dates
Designed By		
Drawn By		
Checked By		
F.H.W.A. Approved:		05/05/80

Approved By Clark A. Scott
State Traffic Plans Engineer

Revision No.	Sheet No.	Index No.
94	2 of 2	640

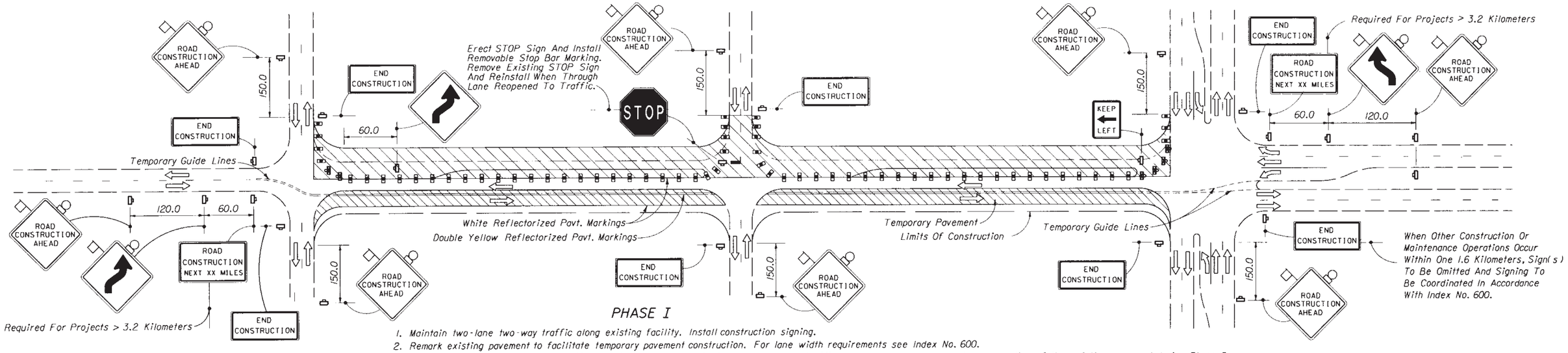

PHASE I

1. Maintain two-lane two-way traffic along existing facility. Install construction signing.
2. Remark existing pavement to facilitate temporary pavement construction. For lane width requirements see Index No. 600.
3. Construct temporary pavement of sufficient width to accommodate two-lane two-way traffic on the temporary pavement and a portion of the existing pavement during Phase I roadway construction. When two-lane two-way traffic can not be maintained during temporary pavement construction one-lane operations shall be maintained in accordance with Index No. 621. Channelizing devices shall be in conformance with 'Dropoffs in Work Zones' of Index No. 600.
4. Mark the pavement in accordance with the Phase I diagram. Reroute through traffic to the temporary pavement and a portion of the existing pavement. For lane width requirements see Index No. 600.
5. Construct two lanes of the proposed roadway, excluding the friction course. Side street traffic to be maintained. Through and cross traffic to be controlled in accordance with Indexes Nos. 620, 621 and 622. Barricading shall be in conformance with 'Dropoffs in Work Zones', Index No. 600. When work extends through an intersection, temporarily reroute the cross traffic to other cross streets. When rerouting is not possible, provide one-lane access (minimum) for two-lane two-way cross streets and one-lane access (minimum) each direction for four-lane two-way cross streets, in accordance with Indexes Nos. 620, 621 and 622.

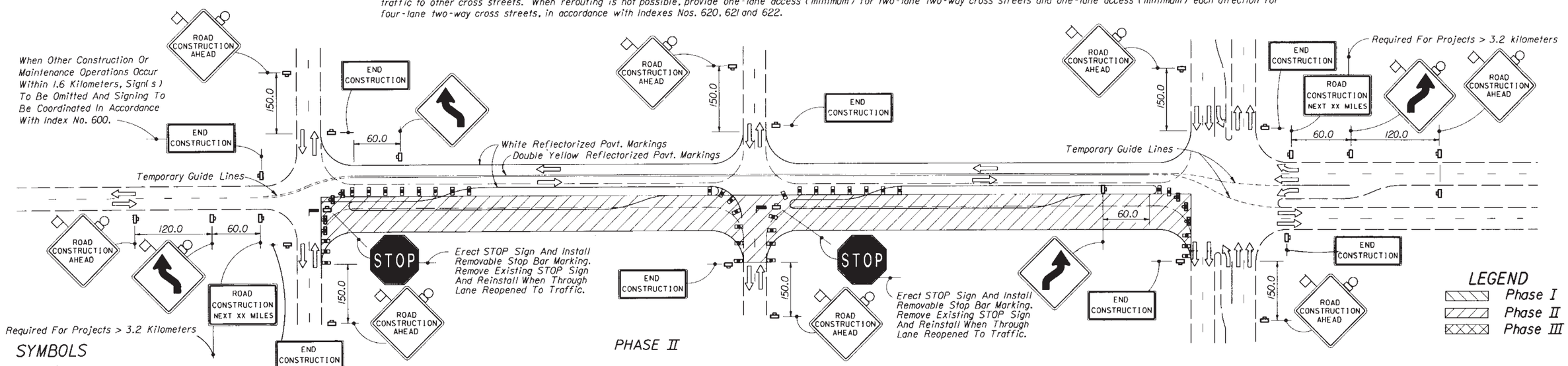

PHASE II

1. Sign and mark Phase I pavement in accordance with the Phase II diagram. For lane width requirements see Index No. 600.
2. Reroute through traffic to Phase I pavement.
3. Complete all Phase II construction, including the friction course. Side street traffic to be maintained. Through and cross traffic to be controlled in accordance with Indexes Nos. 620, 621 and 622. Channelizing devices shall be in conformance with 'Dropoffs in Work Zones' of Index No. 600. When work extends through an intersection, temporarily reroute cross traffic to other cross streets. When rerouting is not possible, provide one-lane access (minimum) for two-lane two-way cross streets and one-lane access (minimum) each direction for four-lane two-way cross streets, in accordance with Indexes Nos. 620, 621 and 622.

SYMBOLS

- Sign With 450 mm x 450 mm (Min.) Orange Flag And Type B Light
- Type I Or Type II Barricade Or Vertical Panel Or Drum (With Steady Burning Light At Night Only). Tubular Markers May Be Used During Daylight Only. Cones May Be Used During Daylight And As Permitted At Night.
- Type III Barricade (With Flashing Light)
- Work Zone Sign
- Stop Bar

See Sheet 2 of 2 for General Notes.

STATE OF FLORIDA DEPARTMENT OF TRANSPORTATION
ROAD DESIGN

TRAFFIC CONTROL THROUGH WORK ZONES

CONVERTING TWO LANES TO FOUR LANES DIVIDED • URBAN

	Names	Dates
Designed By		08/79
Drawn By		08/79
Checked By		08/79
F.H.W.A. Approved:		05/05/80

Approved By Clark A. Scott
State Traffic Plans Engineer

Revision No.	Sheet No.	Index No.
94	1 of 2	641

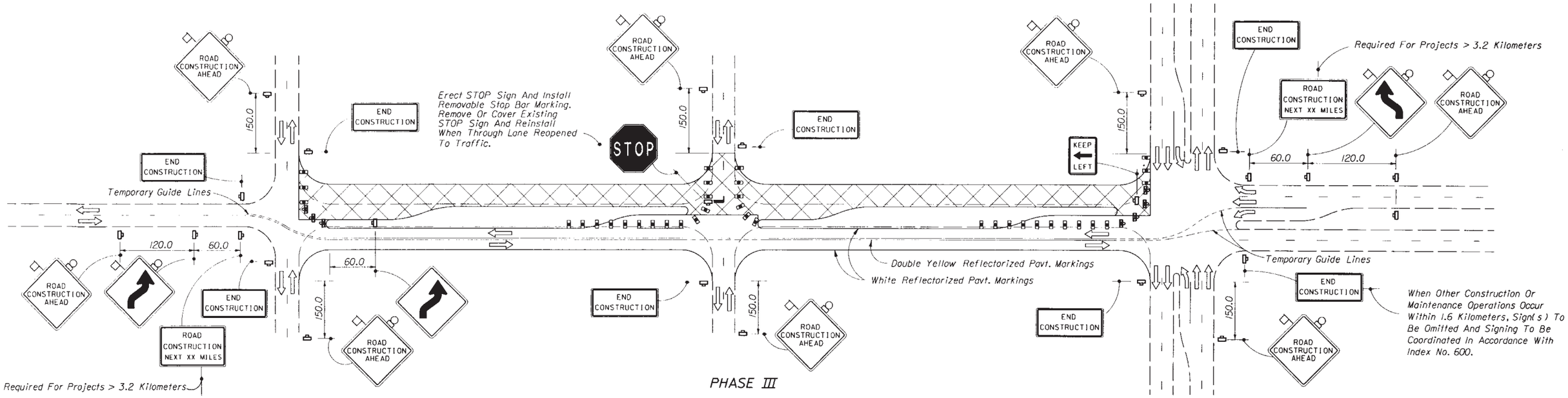

PHASE III

1. Sign and mark Phase II pavement in accordance with the Phase III diagram.
2. Reroute through traffic to Phase II pavement.
3. Construct friction course over Phase I pavement. Side street traffic to be maintained. Through and cross traffic to be controlled in accordance with Indexes Nos. 620, 621 or 622. When work extends through an intersection, temporarily reroute cross traffic to other cross streets. When rerouting is not possible, provide one-lane access (minimum) for two-lane two-way cross streets and one-lane access (minimum) each direction for four-lane two-way cross streets.

GENERAL NOTES

1. All signing, pavement marking, barricades and warning lights necessary for maintenance of traffic shall conform to Index No. 600.
2. The first two warning signs shall have a 450 mm x 450 mm (min.) orange flag and a Type B light attached and operating at all times.
3. Lane widths for maintenance of two-way traffic should desirably be equal to lane widths of the existing facility, but lanes shall not be less than 3.0 meters in width. When one-lane one-way operations are necessary, a minimum width of 3.6 meters should be maintained and traffic controlled in accordance with Indexes Nos. 620, 621 or 622.
4. At signalized intersections, signals shall be directed or relocated as required to the center of relocated lanes.
5. For reflectorized raised pavment marker application see index No. 600 and index No. 17352.
6. Additional barricades, signing, lighting or other traffic controls for limited work areas shall be provided in accordance with other applicable TCZ Indexes as conditions warrant in each phase.
7. Provisions approved by the Engineer shall be made for the removal of storm water from the roadway(s) during construction.
8. Arrows denote direction of traffic only and do not reflect pavement markings.
9. Longitudinal dimensions are to be adjusted to fit field conditions. See Index No. 600.
10. For general TCZ requirements and additional information refer to Index No. 600.

SYMBOLS

- Sign With 450 mm x 450 mm (Min.) Orange Flag And Type B Light
- Type I Or Type II Barricade Or Vertical Panel Or Drum (With Steady Burning Light At Night Only). Tubular Markers May Be Used During Daylight Only. Cones May Be Used During Daylight And As Permitted At Night.
- Type III Barricade (With Flashing Light)
- Work Zone Sign
- Stop Bar

LEGEND

- Phase I
- Phase II
- Phase III

STATE OF FLORIDA DEPARTMENT OF TRANSPORTATION
ROAD DESIGN

TRAFFIC CONTROL THROUGH WORK ZONES

CONVERTING TWO LANES TO FOUR LANES DIVIDED • URBAN

	Names	Dates	Approved By
Designed By		08/79	Clark A. Scott, State Traffic Plans Engineer
Drawn By		08/79	
Checked By		08/79	
F.H.W.A. Approved:		5/5/80	

Revision No.	Sheet No.	Index No.
94	2 of 2	641

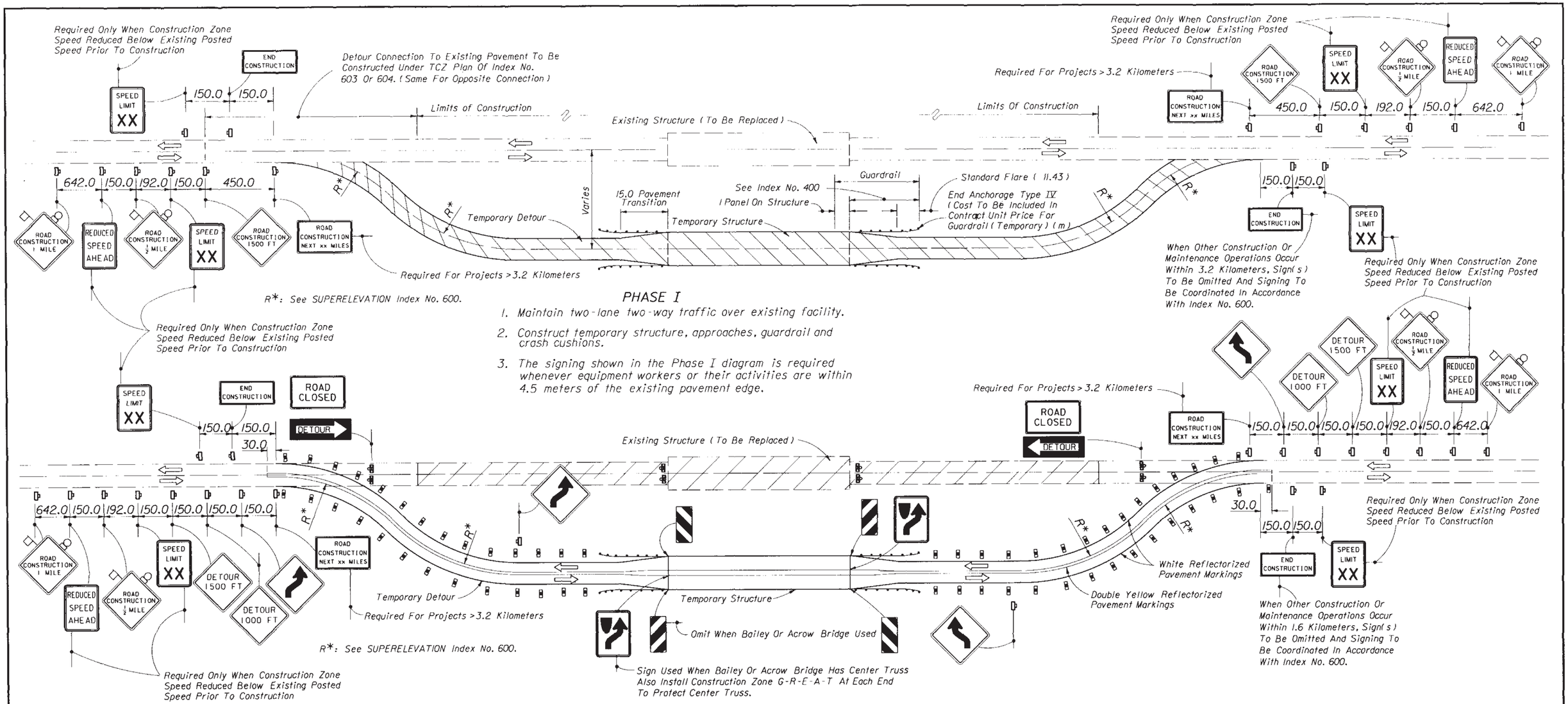

SYMBOLS

- Sign With 450 mm x 450 mm (Min.) Orange Flag And Type B Light
- Type I Or Type II Barricade Or Vertical Panel Or Drum (With Steady Burning Light At Night Only). Tubular Markers May Be Used During Daylight Only. Cones May Be Used During Daylight And As Permitted At Night.
- Type III Barricade (With Flashing Light)
- Work Zone Sign

PHASE II

1. Re-sign and mark as shown in Phase II plan.
2. Reroute traffic to detour and maintain two-way traffic on detour. Install Type III barricades.
3. Construct proposed structure and reconstruct or resurface existing approaches.

PHASE III (See Sheet 2 of 2)

GENERAL NOTES (See Sheet 2 of 2)

LEGEND

Phase I

Phase II

STATE OF FLORIDA DEPARTMENT OF TRANSPORTATION
ROAD DESIGN

TRAFFIC CONTROL THROUGH WORK ZONES

TWO-LANE, TWO-WAY • RURAL STRUCTURE REPLACEMENT

	Names	Dates
Designed By		08/79
Drawn By		08/79
Checked By		08/79
F.H.W.A. Approved:		09/11/79

Approved By Clark A Scott
State Traffic Plans Engineer

Revision No.	Sheet No.	Index No.
94	1 of 2	650

PHASE III

1. Reroute traffic to existing alignment and maintain two-way traffic.
2. Remove all temporary construction items.

GENERAL NOTES

1. All signing, pavement marking, barricades and warning lights necessary for maintenance of traffic shall conform to Index No. 600.
2. The first two warning signs shall have a 450 mm x 450 mm (min.) orange flag and a Type B light attached and operating at all times.
3. For speed sign applications see Index No. 600.
4. For lane width requirements see Index No. 600. When one-way one-lane operations are necessary, a minimum width of 3.6 meters shall be maintained and traffic controlled in accordance with Indexes Nos. 603, 604, 606, 607 or 608. Minimum width for the detour shoulders is 1.8 meters.
5. Method of attaching temporary guardrail to the detour structure to be approved by the Engineer.
6. Provisions approved by the Engineer shall be made for the removal of storm water from the roadway(s) during construction.
7. Temporary crash cushions shall be the inertial type in accordance with Index No. 415 or others as called for in the plans.
8. Arrows denote direction of traffic only and do not reflect pavement markings.
9. Longitudinal dimensions are to be adjusted to fit field conditions. See Index No. 600.
10. Where the temporary structure is not required the detour may be constructed in accordance with Index No. 609, unless otherwise stipulated in the plans.
11. For reflective raised pavment marker application see Index No. 600 and Index No. 17352.
12. For general TCZ requirements and additional information refer to Index No. 600.

STATE OF FLORIDA DEPARTMENT OF TRANSPORTATION
ROAD DESIGN

TRAFFIC CONTROL THROUGH WORK ZONES

TWO-LANE, TWO-WAY • RURAL
STRUCTURE REPLACEMENT

	Names	Dates
Designed By		08/79
Drawn By		08/79
Checked By		08/87

Approved By Clark A. Scott
State Traffic Plans Engineer

Revision No.	Sheet No.	Index No.
94	2 of 2	650

F.H.W.A. Approved:

BUFFER LENGTH (METERS)			
Construction Zone Speed MPH	Construction Zone Speed km/h	X (m)	Z (m)
60-70	100-110	162.0	165.0
55	90	105.0	129.0
≤ 50	≤ 80	51.0	90.0

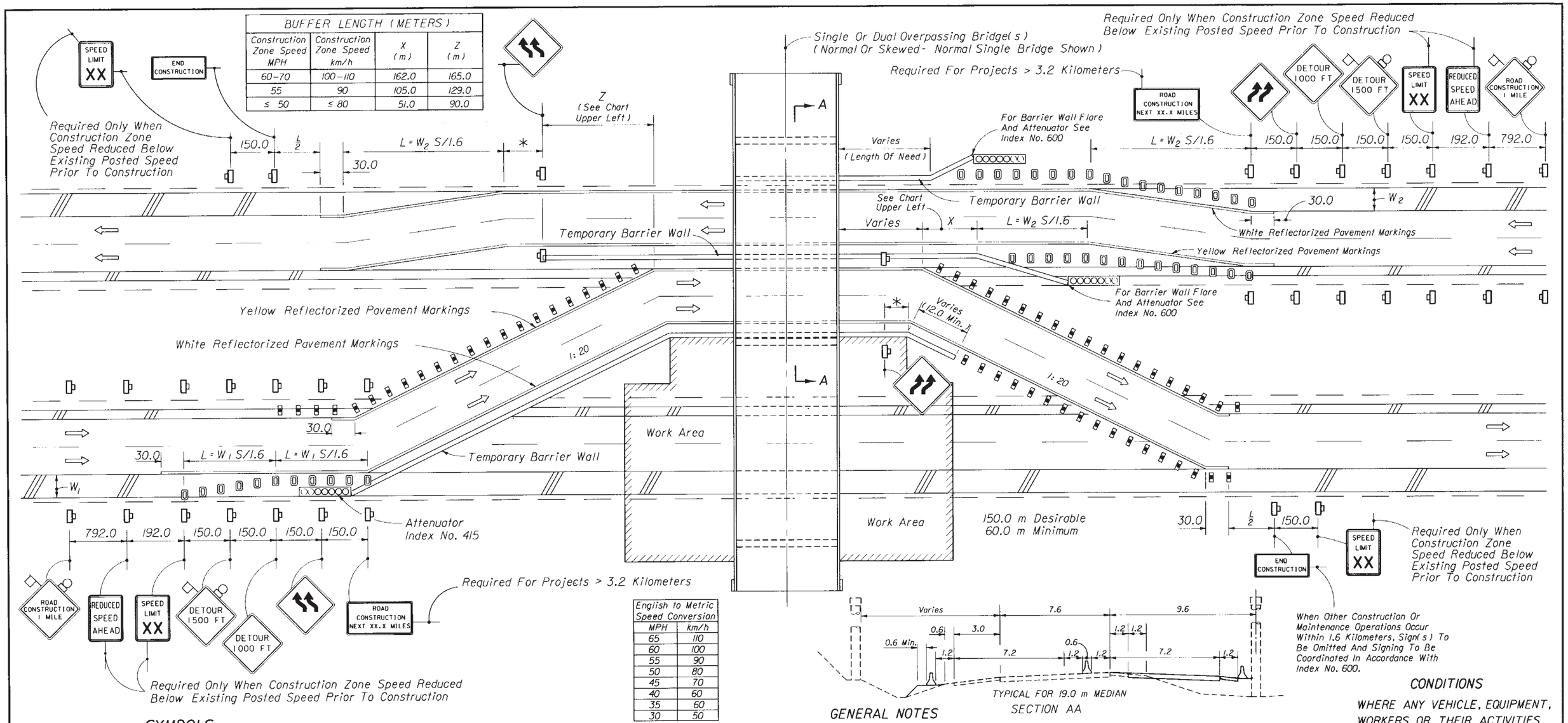

English to Metric Speed Conversion	
MPH	km/h
65	110
60	100
55	90
50	80
45	70
40	60
35	60
30	50

TYPICAL FOR 19.0 m MEDIAN
SECTION AA

SYMBOLS

- Work Area
- Sign With 450 mm x 450 mm (Min.) Orange Flag And Type B Light
- Type I Or Type II Barricade Or Vertical Panel Or Drum (With Steady Burning Light At Night Only). Tubular Markers May Be Used During Daylight Only. Cones May Be Used During Daylight And As Permitted At Night.
- Work Zone Sign
- Drum

GENERAL NOTES

1. All vehicles, equipment, workers and their activities are restricted at all times to one side of the highway.
2. The first two warning signs, each side, shall have a 450 mm x 450 mm (min.) orange flag and a Type B light attached and operating at all times.
3. All signs shall be post mounted.
4. S = Posted speed limit (converted to km/h).
5. Within the lateral transitions, the maximum spacing between cones and tubular markers shall be 7.5 meters. Maximum spacing between Type I or Type II barricades or vertical panels or drums shall be based on the speed limit as follows: 5.0 meters up to 25 MPH; 10.0 meters for 30 MPH-40 MPH; 15.0 meters for 45 MPH or greater.
   Barricades, vertical panels, cones, tubular markers and drums shall not be intermixed in lateral transition.
6. For speed sign applications see Index No. 600.
7. All existing pavement markings within the realignment which conflict with the revised traffic pattern are to be removed and new pavement markings used for marking edge lines and lane lines.
8. Arrows denote direction of traffic only and do not reflect pavement markings.
9. Longitudinal dimensions are to be adjusted to fit field conditions. See Index No. 600.
10. When side roads, cross roads or interchanges are located within the limits for work zone traffic control additional traffic control devices shall be erected in accordance with other applicable TCZ Indexes.
11. For general TCZ requirements and additional information refer to Index No. 600.

CONDITIONS

WHERE ANY VEHICLE, EQUIPMENT, WORKERS OR THEIR ACTIVITIES REQUIRE THE CLOSURE OF ONE ROADWAY AND THE OPPOSING ROADWAY IS CONVERTED TO TEMPORARY TWO-WAY TRAVEL BY WAY OF CROSSOVERS

STATE OF FLORIDA DEPARTMENT OF TRANSPORTATION
ROAD DESIGN

MULTILANE DIVIDED MAINTENANCE AND CONSTRUCTION

	Names	Dates
Designed By		10/89
Drawn By		10/89
Checked By		10/89

Approved By Clark A. Scott
State Traffic Plans Engineer

Revision No.	Sheet No.	Index No.
94	1 of 2	651

F.H.W.A. Approved:

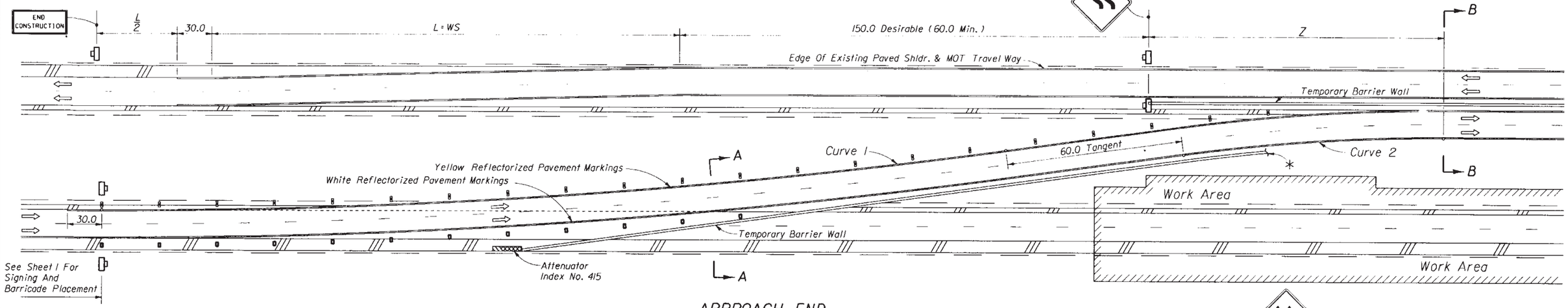

APPROACH END

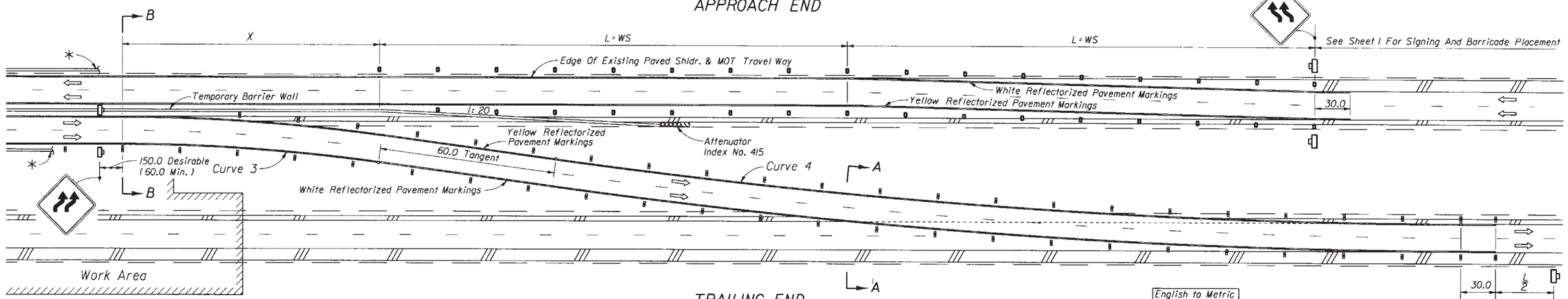

TRAILING END

CURVILINEAR ALIGNMENT CROSSOVER

* Length of barrier wall needed for protection of work area and/or other hazards to be shown in the plans. For complimentary information on barrier walls and work area see Sheet 1. See Index No. 600 for clear zone requirements.

When Other Construction Or Maintenance Operations Occur Within 1.6 Kilometers, Sign(s) To Be Omitted And Signing To Be Coordinated In Accordance With Index No. 600.

English to Metric Speed Conversion	
MPH	km/h
65	110
60	100
55	90
50	80
45	70
40	60
35	60
30	50

BUFFER LENGTH (m)					
Construction Zone Speed	Construction Zone Speed	19.0 Median		26.0 Median	
MPH	km/h	X	Z	X	Z
70	110	185.0	179.0	177.0	166.0
65	110	177.0	171.0	168.0	156.0
60	100	171.0	165.0	162.0	150.0
55	90	103.0	113.0	100.0	107.0
50	80	61.0	87.0	61.0	84.0
45	70	35.0	50.0	35.0	50.0
40	60	31.0	45.0	32.0	45.0
35	60	28.0	41.0	28.0	40.0
30	50	24.0	36.0	24.0	35.0

MINIMUM RADII FOR NORMAL CROSS SLOPES			
Construction Zone Speed	Construction Zone Speed	Minimum Radius (m) R	
MPH	km/h	Curves 1 & 4	Curves 2 & 3
70	110	6985.4	1397.2
65	110	6985.4	1164.3
60	100	6985.4	997.9
55	90	3492.7	776.0
50	80	3492.7	698.6
45	70	329.1	213.3
40	60	252.9	167.6
35	60	188.9	124.9
30	50	137.1	86.8

NOTE: Detours with speeds of 80 km/h or greater are considered high speed facilities; curvature and superelevation criteria for open highway conditions apply.

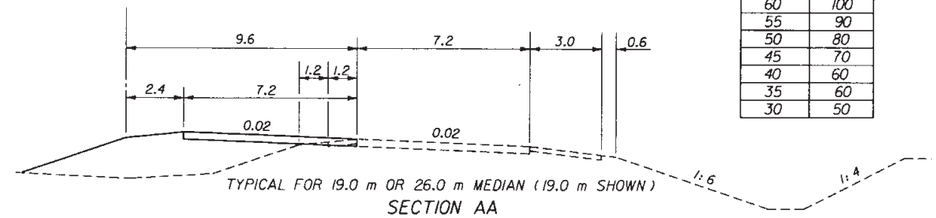

TYPICAL FOR 19.0 m OR 26.0 m MEDIAN (19.0 m SHOWN)

SECTION AA

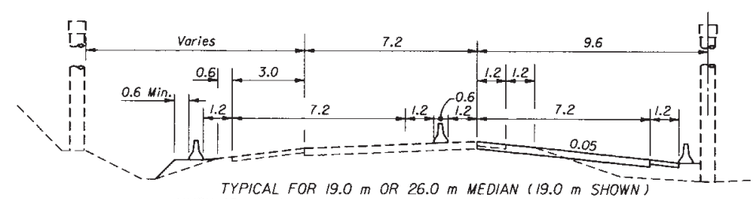

TYPICAL FOR 19.0 m OR 26.0 m MEDIAN (19.0 m SHOWN)
(WITH OR WITHOUT OVERPASSING ROADWAY-OVERPASSING SHOWN)

SECTION BB

STATE OF FLORIDA DEPARTMENT OF TRANSPORTATION
ROAD DESIGN

MULTILANE DIVIDED MAINTENANCE AND CONSTRUCTION

	Names	Dates
Designed By		
Drawn By		
Checked By		

Approved By Clark A. Scott
State Traffic Plans Engineer

F.H.W.A. Approved:	Revision No.	Sheet No.	Index No.
	94	2 of 2	651

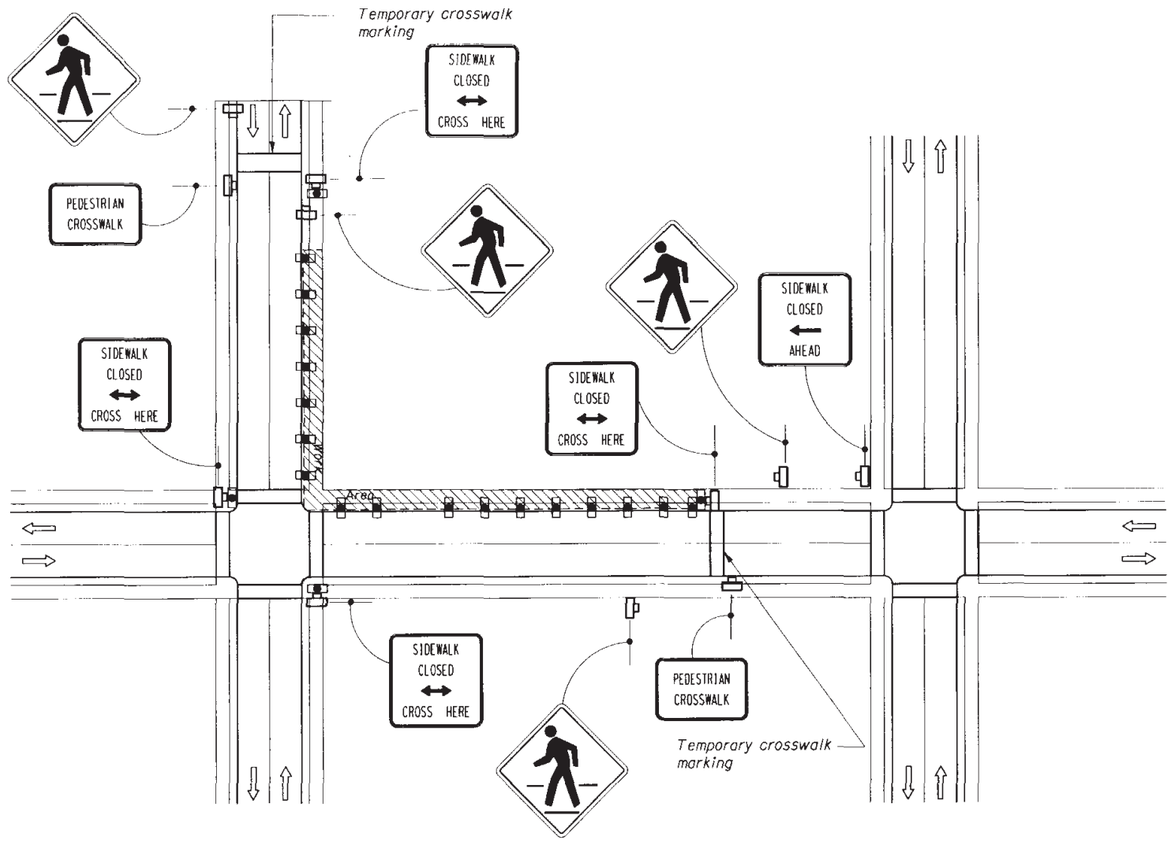

CORNER SIDEWALK CLOSURE
WITH TEMPORARY CROSSWALKS

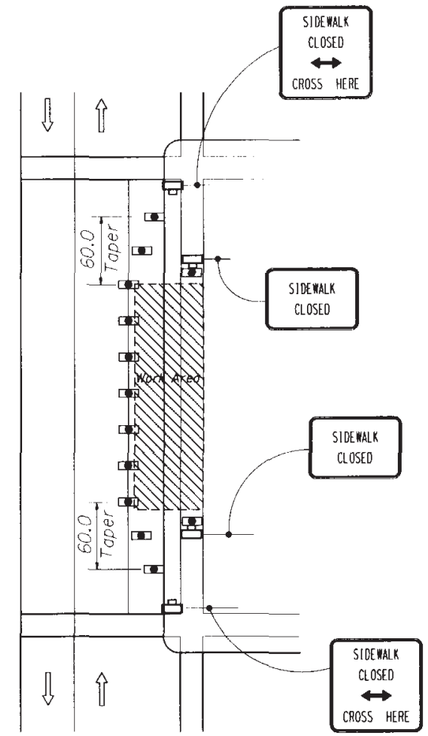

MID-BLOCK SIDEWALK
CLOSURE

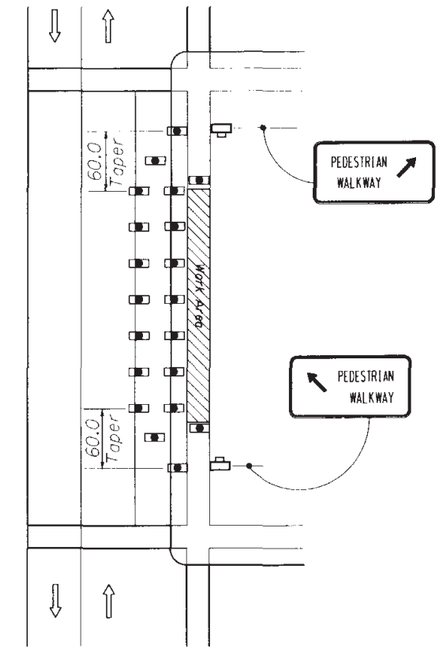

MID-BLOCK SIDEWALK CLOSURE
WITH TEMPORARY WALKWAY

TYPICAL APPLICATIONS

Sidewalk Repair
Pavement Widening
Utility Work

CONDITIONS

WHERE ANY VEHICLE, EQUIPMENT WORKERS OR THEIR ACTIVITIES ENCROACH ON THE SIDEWALK FOR A PERIOD OF MORE THAN 60 MINUTES

SYMBOLS

Work Area

Type I Or Type II Barricade Or Vertical Panel Or Drum (With Steady Burning Light At Night Only). Tubular Markers May Be Used During Daylight Only. Cones May Be Used During Daylight And As Permitted At Night.

Work Zone Sign

GENERAL NOTES

1. Arrows denote direction of traffic only and do not reflect pavement markings.
2. Only the signs controlling pedestrian flows are shown. Other work zone signs will be needed to control traffic on the streets.
3. For spacing of traffic control devices and general TCZ requirements refer to Index No. 600. Maximum spacing between barricades, vertical panels, drums or tubular markers shall not be greater than 7.5 m.
4. Street lighting should be considered.
5. For nightime closures use type A flashing warning lights on barricades supporting signs and closing sidewalks. Use type C steady-burn lights on channelizing devices seperating the work area from vehicular traffic.
6. Pedestrian traffic signal display controlling closed crosswalks shall be covered or deactivated.
7. Temporary walkways shall be a minimum of 1.2 m wide and kept free of any obstructions and hazards such as holes, debris, mud, construction equipment, stored materials and etc.
8. Post Mounted Signs located near or adjacent to a sidewalk shall have a 2.1 m minimum clearance from the bottom of sign to the sidewalk.
9. When construction activities involve sidewalks on both sides of the street, efforts should be made to to stage the construction so that both sidewalks are not out of service at the same time.
10. In the event that sidewalks on both sides of the street are closed, then pedestrians shall be guided around the construction zone.

STATE OF FLORIDA DEPARTMENT OF TRANSPORTATION
ROAD DESIGN

PEDESTRIAN CONTROL FOR CLOSURE OF SIDEWALKS

	Names	Dates	Approved By
Designed By		7/93	Charles A. Scott
Drawn By		7/93	
Checked By		7/93	
F.H.W.A. Approved:			

Revision No.	Sheet No.	Index No.
94	1 of 1	660

DESIGN ELEMENTS RELATED TO HIGHWAY SAFETY

September 1994

ELEMENT / TYPE OF FACILITY	RURAL & URBAN FREEWAYS AND RURAL ARTERIALS & COLLECTORS: DESIGN SPEED OF GREATER THAN 80 km/h AND PROJECTED ADT (20 YR) OF 1500 OR GREATER	RURAL ARTERIALS & COLLECTORS: DESIGN SPEED OF GREATER THAN 80 km/h AND PROJECTED ADT (20 YR) LESS THAN 1500	RURAL COLLECTORS: DESIGN SPEED OF 60 km/h OR LESS AND RURAL LOCALS-ALL SPEEDS	URBAN ARTERIALS & COLLECTORS: DESIGN SPEEDS OF 50-80 km/h (WITHOUT CURB AND GUTTER)	URBAN ARTERIALS & COLLECTORS: DESIGN SPEED OF 80 km/h OR LESS (CURB AND GUTTER)
EMBANKMENT SLOPE	Fill Ht.(m) 0-1.5 1:6 1.5-3.0 1:6 to edge of CZ & 1:4 3.0-6.0 1:6 to edge of CZ & 1:3 > 6.0 1:2 (with guardrail) R/W cost must be considered in urban areas in using these slopes.	Fill Ht.(m) 0-1.5 1:6 except where R/W is insufficient then 1:6 to edge of CZ & 1:3 will be permitted. >1.5-6.0 1:6 to edge of CZ & 1:3 except where R/W is insufficient then 1:2 with guardrail will be permitted.	Fill Ht.(m) 0-1.5 1:6 except where R/W is insufficient then 1:6 to edge of CZ & 1:3 will be permitted. >1.5-6.0 1:6 to edge of CZ & 1:3 except where R/W is insufficient then 1:2 with guardrail will be permitted.	Fill Ht.(m) 0-1.5 1:6 except where R/W is insufficient then 1:6 to edge of CZ & 1:3 will be permitted. >1.5-6.0 1:6 to edge of CZ & 1:3 except where R/W is insufficient then 1:2 with guardrail will be permitted.	1:2 or to suit property owner, not flatter than 1:6. R/W cost must be considered for high fill sections in urban areas.
CLEAR WIDTHS FOR BRIDGES ⑩	Freeways, divided arterials & collectors (4 or more lanes): Travel lanes plus 3.0 m Rt. and 1.8 m Lt.; 3.0 m Lt. for 6 or more lanes. Undivided arterials & collectors: Travel lanes plus approach shoulder width.	Travel lanes plus approach shoulder widths.	Travel lanes plus approach shoulder widths.	Divided: Travel lanes plus approach shoulder width Rt. and 1.8 m Lt. unless full median section is carried across structure. Undivided: Travel lanes plus approach shoulder widths.	Full section (face to face of curb) plus sidewalk. When concrete barrier wall is placed in front of sidewalk a minimum clearance of 0.75 m is required between the travel lane, wide curb lane or bicycle lane and the toe of the barrier wall.
BACKSLOPES	1:4 (Normal)	1:4 where R/W permits or 1:3.	1:4 where R/W permits or 1:3.	1:4 where R/W permits or 1:3.	1:2 or to suit property owner, not flatter than 1:6.
CLEAR ZONE (CZ) ①②③⑨	Standard — Design Speed km/h / Travel Lanes / Auxil. Lanes & Ramps: 100-110 / 11.0 m / 7.3 m 90 / 9.1 m / 5.4 m 70-80 / 7.3 m / 4.2 m	Standard — Design Speed km/h / Travel Lanes / Auxil. Lanes & Ramps: 100-110 / 9.1 m / 5.4 m 90 / 7.3 m / 4.2 m 70-80 / 6.0 m / 4.2 m	4.8 m standard; 3.0 m minimum from edge of both travel and auxiliary lanes.	Standard — Design Speed km/h / Travel Lanes / Auxil. Lanes & Ramps: 80 / 7.3 m / 4.2 m 70 / 7.3 m ⑤⑦ / 4.2 m 50-60 / 5.4 m ⑦ / 3.0 m ⑦	1.2 m from face of outside curb. Ø 1.8 m from edge of median traffic lane. Bridge piers normally will be 4.9 m min. from edge of travel lane. ✱
GUARDRAIL LOCATION	Shoulder width plus 0.6 m to face of guardrail (at shoulder line when shoulder width is 3.6 m). May be desirable to locate on frontslope; see Detail K, Index No. 400.	Shoulder width plus 0.6 m to face of guardrail (2.4 m min.). May be desirable to locate on frontslope; see Detail K, Index No. 400.	Shoulder width plus 0.6 m to face of guardrail (2.4 m min.). May be desirable to locate on frontslope; see Detail K, Index No. 400.	Shoulder width plus 0.6 m to face of guardrail (2.4 m min.).	Normally flush with face of curb.
SIGNS	Outside clear zone and not generally in median. All supports within clear zone shall be frangible or breakaway unless shielded by barrier that is justified for other reasons. Overhead sign structures located in the clear zone shall be shielded.	Outside clear zone. All supports in clear zone shall be frangible or breakaway unless shielded by barrier that is justified for other reasons. Overhead sign structures located in the clear zone shall be shielded.	Outside clear zone. All supports in clear zone shall be frangible or breakaway unless shielded by barrier that is justified for other reasons. Overhead sign structures located in the clear zone shall be shielded.	Outside clear zone. All supports in clear zone shall be frangible or breakaway unless shielded by barrier that is justified for other reasons. Overhead sign structures located in the clear zone shall be shielded.	0.6 m min. from face of curb to inside edge of sign panel. Sign placement shall not block sidewalk.
LIGHT POLES	Not generally in median except when shielded by barrier. Outside clear zone or frangible base 6.0 m from edge of travel lane and 4.2 m min. from edge of auxiliary lane or behind approved barrier that is justified for other reasons.	Outside clear zone for both frangible and non-frangible bases if clear zone 6.0 m or less. Desirably at 6.0 m from edge of thru lane and 4.2 m from edge of auxiliary lane or behind approved barrier that is justified for other reasons. Frangible bases may be placed at 6.0 m from thru lane and 4.2 m from auxiliary lane for clear zones greater than 6.0 m.	Outside clear zone or behind approved barrier that is justified for other reasons.	Outside clear zone or behind approved barrier that is justified for other reasons. Frangible bases may be placed at 6.0 m from thru lane and 4.2 m from auxiliary lane for clear zones greater than 6.0 m.	1.2 m min. from face of outside curb. Ø 1.8 m min. from edge of median traffic lane.
UTILITY POLES, FIRE HYDRANTS, ETC.	Not in median. Not within R/W of the main travel way of freeways. For other facilities outside the clear zone. As close as practical to R/W line. ☒	Outside clear zone. As close as practical to R/W line. ☒	Outside clear zone. Not in median. As close as practical to R/W line. ☒	Outside clear zone. Not in median. As close as practical to R/W line.	Not in median. 1.2 m min. from face of outside curb. Ø
RAILROAD CROSSING DEVICES	Not on freeways. 3.0 m min. from edge of travel lane or 1.8 m min. from edge of auxiliary lane to near edge of device. No guardrail. ☆	3.0 m min. from edge of travel lane or 1.8 m min. from edge of auxiliary lane to near edge of device. No guardrail. ☆	Minimum from edge of travel lane to near edge of device: Greater than 70 km/h 3.0 m 60-70 km/h 2.4 m 50 km/h or less 1.8 m 1.8 m Minimum for auxiliary lanes No guardrail ☆	Minimum from edge of travel lane to near edge of device: Greater than 70 km/h 3.0 m 60-70 km/h 2.4 m 50 km/h or less 1.8 m 1.8 m Minimum for auxiliary lanes No guardrail ◇ ☆	0.75 m min. from face of curb to near edge of device.
MEDIAN WIDTHS	Freeways 18.0 m min. - 100 km/h and over (12.0 m min. when lanes added in median) 12.0 m min. - under 100 km/h Other divided highways 12.0 m min. - 90 km/h and over 6.6 m min. - under 90 km/h		6.6 m Min.	6.0 m min. - 70-80 km/h 5.0 m min. - 60 km/h or less (greater widths desirable) For reconstruction projects the min. painted median width with provision for left turn is 3.0 m (greater widths desirable)	6.0 m min. - 70 km/h 5.0 m min. - 60 km/h or less (greater widths desirable) For reconstruction projects the min. painted median width with provision for left turn is 3.0 m (greater widths desirable)
TREES △ Existing Or Expected Dia. ≥100 mm Measured 150 mm Above The Ground	Outside clear zone. Standard criteria required for Freeways. +	Outside clear zone.	Outside clear zone.	Outside clear zone.	1.2 m min. from face of outside curb. 1.8 m min. from edge of median traffic lane.

Design speed to be established using realistic anticipated operating speed.

Preferred ditch cross sections are shown on pages 3-9 and 3-10 of the "Roadside Design Guide", 1988.

Consideration should be given to maintaining greater than the above specified clearances and/or flatter slopes where feasible and practical.

Values shown above shall be used on all new construction and on reconstruction projects to the extent that economic and environmental considerations and R/W limitations will allow. For definitions of new construction and reconstruction see "Manual Of Uniform Minimum Standards For Design, Construction And Maintenance For Streets And Highways". The values shown do not apply to RRR projects.

Driving lane is any traffic lane, travel or auxiliary.

An auxiliary lane is the portion of the roadway adjoining the traveled way for parking, speed changes, turning, storage for turning, weaving, truck climbing or for other purposes supplementary to through traffic movement.

Traveled way (Travel lanes) is the portion of the roadway for the movement of vehicles, exclusive of shoulders and auxiliary lanes.

Ø On projects where the 1.2 m minimum offset cannot be reasonably obtained and other alternatives are deemed impractical, the minimum may be reduced to 0.75 m.

✱ At locations where immediately adjacent development such as buildings, etc. provide less clearance, bridge piers can be placed to provide clearance less than 4.9 m. Adequate sight distance for crossing maneuvers at intersections should be provided.

△ Offsets shown are for existing or newly planted trees. If existing trees are close to but less than the minimum offset indicated, other factors should be considered to determine adequacy of offset, i.e. ADT; operating speed; accident history; size, age and type of tree; protection by a barrier; etc. Newly planted trees may be placed behind barriers that are provided for other reasons. The minimum setback distance from the back of concrete barriers, walls, abutments or other rigid obstructions is 1.2 m for newly planted trees. For W-beam guardrail the minimum setback is 1.8 m from the face of the rail for newly planted trees. Offsets shown apply to both outside and median for divided highways unless otherwise noted. When trees are placed in the median adequate sight distance at intersections, turnouts and median openings, etc. shall be maintained; see Index No. 546 for additional information.

☐ Vacant

◇ For divided facilities with curbed medians and undivided facilities utilizing curbed separations at crossings, 0.75 m from face of curb to near edge of signal device in accordance with Traffic Design Standards Index No. 17882.

\+ When offset established, care shall be taken to avoid blocking sight distance to roadside signs.

☆ Not less than 0.6 m from edge of any shoulder pavement.

☒ Avoid encroachment on adjacent private property.

Clear Zone Footnotes:

① Standard values are to be used for all new construction projects. These values may be reduced only where individually justified to mitigate critical social, economic, and environmental impacts or to lessen excessive right-of-way costs. Standard values are also to be used for reconstruction projects; however values down to AASHTO minimum may be used where individually justified due to critical social, economic and environmental impacts and/or excessive right-of-way costs or when existing roadside obstacles are not considered hazardous as evidenced by field review and by accident history or accident potential.

② Where accident history indicates need, or where specific site investigation shows definitive accident potential, clear zones for rural and urban facilities (without curb) should be adjusted on the outside of horizontal curves in accordance with Table 1 (Sht. 2 of 2).

③ The use of barriers or other safety treatment is to be considered if clear zone requirements are not provided.

④ Vacant

⑤ May be reduced to a lower speed condition (50-60 km/h) if conditions more nearly approach those for a lower speed.

⑥ Vacant

⑦ 1.8 m from edge of inside traffic lane where median curb used.

⑧ Vacant

⑨ When a frontslope steeper than 1:4 encroaches into the clear zone, a clear runout area is to be provided at the bottom of the slope in accordance with Fig. 3.2 of the "Roadside Design Guide", 1989 (Fig. 3.7 of the pending metric "Roadside Design Guide").

⑩ See "Structures Design Guidelines", Chapter 2, for further details.

STATE OF FLORIDA DEPARTMENT OF TRANSPORTATION
ROAD DESIGN

DESIGN ELEMENTS RELATED TO HIGHWAY SAFETY

	Names	Dates
Designed By		
Drawn By	HSD	06/81
Checked By	JVG	06/81
F.H.W.A. Approved:		2/5/88

Approved By: Freddie Simmons (signature), State Roadway Design Engineer

Revision No.	Sheet No.	Index No.
94	1 of 2	700

TABLE I

CLEAR ZONE OF CURVED ALIGNMENT (CZ_c), METERS

RADIUS (Meters)	Design Speed (km/h) 50			60			70			80			90				100				110			
Tangent CZ	3.0	4.8	5.4	3.0	4.8	5.4	4.2	6.0	7.3	4.2	6.0	7.3	4.2	5.4	7.3	9.1	5.4	7.3	9.1	11.0	5.4	7.3	9.1	11.0
900	3.0	4.8	5.4	3.3	5.3	5.9	4.6	6.6	8.0	4.6	6.6	8.0	5.0	6.5	8.8	10.9	6.5	8.8	10.9	13.2	6.5	8.8	10.9	13.2
700	3.3	5.3	5.9	3.3	5.3	5.9	4.6	6.6	8.0	5.0	7.2	8.8	5.0	6.5	8.8	10.9	6.5	8.8	10.9	13.2	7.0	9.5	11.8	14.3
600	3.3	5.3	5.9	3.3	5.3	5.9	4.6	6.6	8.0	5.0	7.2	8.8	5.0	6.5	8.8	10.9	7.0	9.5	11.8	14.3	7.6	10.2	12.7	15.4
500	3.3	5.3	5.9	3.3	5.3	5.9	5.0	7.2	8.8	5.0	7.2	8.8	5.5	7.0	9.5	11.8	7.0	9.5	11.8	14.3	7.6	10.2	12.7	15.4
455																					8.1	11.0	13.7	16.5
450	3.3	5.3	5.9	3.6	5.8	6.5	5.0	7.2	8.8	5.5	7.8	9.5	5.5	7.0	9.5	11.8	7.6	10.2	12.7	15.4				
400	3.3	5.3	5.9	3.6	5.8	6.5	5.0	7.2	8.8	5.5	7.8	9.5	5.5	7.0	9.5	11.8	7.6	10.2	12.7	15.4				
360																	8.1	11.0	13.7	16.5				
350	3.3	5.3	5.9	3.6	5.8	6.5	5.0	7.2	8.8	5.5	7.8	9.5	5.9	7.6	10.2	12.7								
300	3.3	5.3	5.9	3.6	5.8	6.5	5.5	7.8	9.5	5.9	8.4	10.2	6.3	8.1	11.0	13.7								
275													6.3	8.1	11.0	13.7								
250	3.6	5.8	6.5	3.6	5.8	6.5	5.5	7.8	9.5	5.9	8.4	10.2												
210										6.3	9.0	11.0												
200	3.6	5.8	6.5	3.9	6.2	7.0	5.9	8.4	10.2															
160							6.3	9.0	11.0															
150	3.9	6.2	7.0	4.2	6.7	7.6																		
115				4.5	7.2	8.1																		
100	4.2	6.7	7.6																					
75	4.5	7.2	8.1																					

Note: Curves flatter than 900 m do not require an adjusted clear zone.

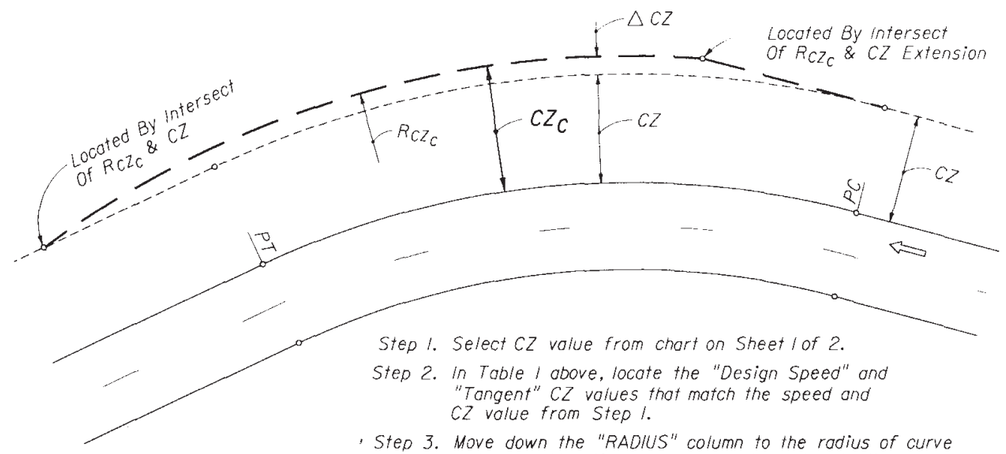

Step 1. Select CZ value from chart on Sheet 1 of 2.

Step 2. In Table I above, locate the "Design Speed" and "Tangent" CZ values that match the speed and CZ value from Step 1.

Step 3. Move down the "RADIUS" column to the radius of curve under consideration, then across the table to the column found under Step 2, to find the CZ_C value.

CZ_C

CLEAR ZONE WIDTHS ON CURVES FOR HIGHWAYS WITH FLUSH SHOULDERS

STATE OF FLORIDA DEPARTMENT OF TRANSPORTATION
ROAD DESIGN

DESIGN ELEMENTS RELATED TO HIGHWAY SAFETY

	Names	Dates
Designed By	COMM	9/94
Drawn By	HKH	9/94
Checked By	JVG/TLH	9/94
F.H.W.A. Approved:		2/5/88

Approved By Freddie Simmons
State Roadway Design Engineer

Revision No.	Sheet No.	Index No.
94	2 of 2	700

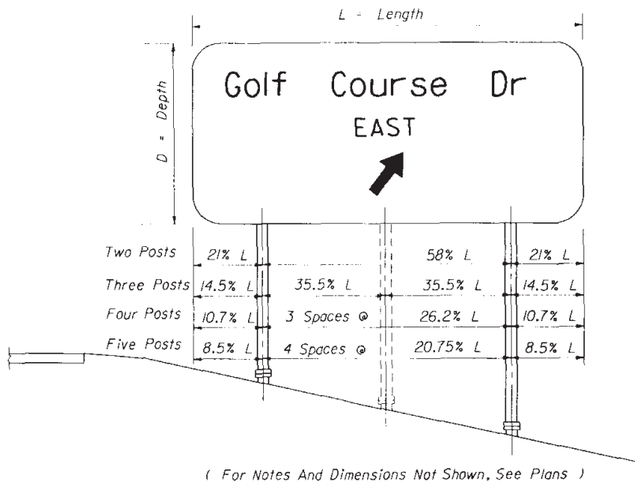

(For Notes And Dimensions Not Shown, See Plans)

TYPICAL ELEVATION

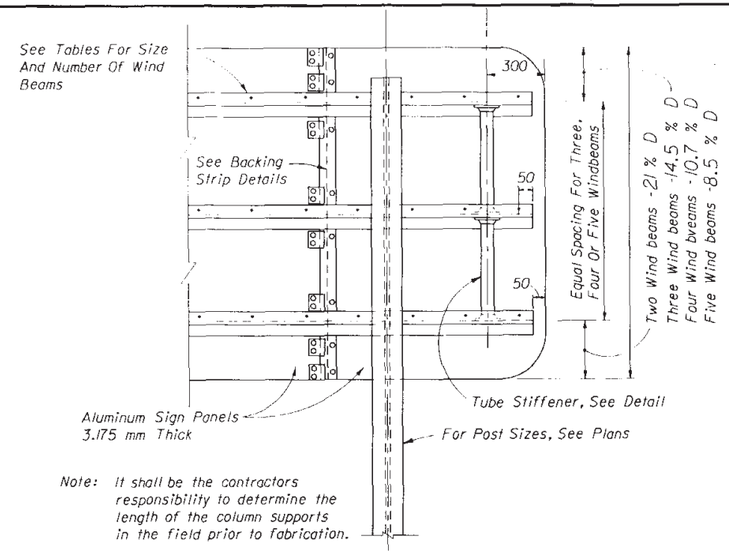

Note: It shall be the contractors responsibility to determine the length of the column supports in the field prior to fabrication.

PARTIAL REAR ELEVATION

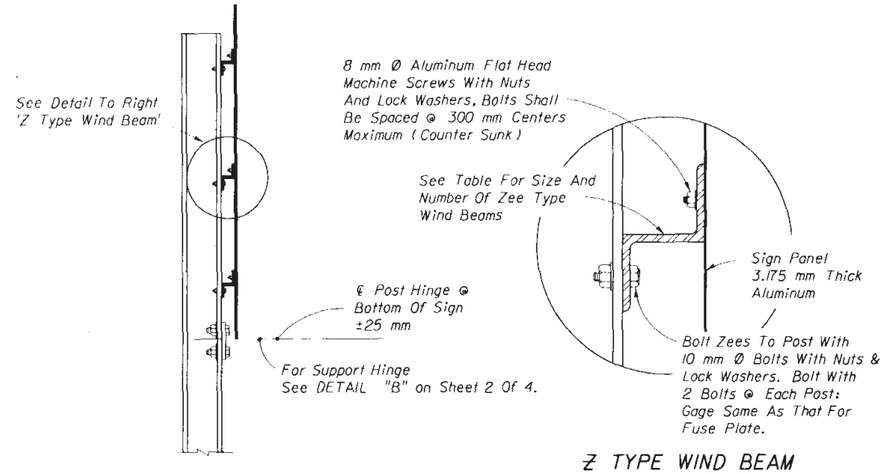

SIDE VIEW

Z TYPE WIND BEAM

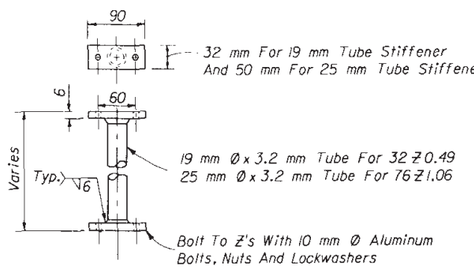

TUBE STIFFENER DETAIL

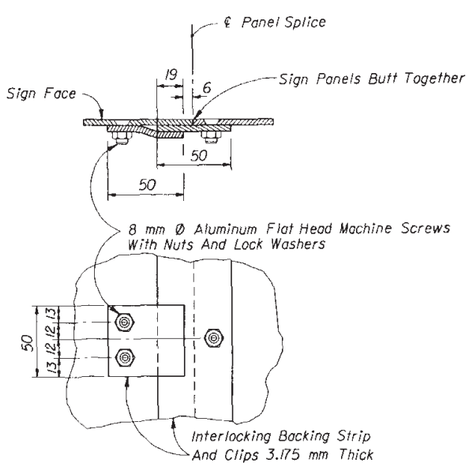

(Maximum Spacing Of Clips 300 mm)

BACKING STRIP DETAIL

WIND LOADING CHART BY ZONES

THE FOLLOWING VALUES FOR VARIOUS SECTIONS OF THE STATE ARE IN GENERAL AGREEMENT WITH THE ISOTACH MAP AND ARE APPROPRIATE FOR USE IN THE DESIGN OF SIGN STRUCTURES.

ZONE NO. 1 (97 km/h)

Alachua, Bradford, Baker, Bay, Calhoun, Clay, Columbia, Escambia, Gadsden, Gilchrist, Hamilton, Holmes, Jackson, Jefferson, Lafayette, Lake, Leon, Liberty, Madison, Marion, Okaloosa, Putnam, Santa Rosa, Sumter, Suwannee, Union, Walton And Washington Counties.

ZONE NO. 2 (113 km/h)

Citrus, Desoto, Dixie, Duval, Flagler, Franklin, Glades, Gulf, Hardee, Hendry, Hernando, Highlands, Hillsborough, Levy, Nassau, Okeechobee, Orange, Osceola, Pasco, Pinellas, Polk, Seminole, St. Johns, Taylor And Wakulla Counties.

ZONE NO. 3 (130 km/h)

Brevard, Charlotte, Collier, Indian River, Lee, Manatee, Martin, Palm Beach, Sarasota, St. Lucie And Volusia Counties.

ZONE NO. 4 (145 km/h)

Broward, Dade And Monroe Counties.

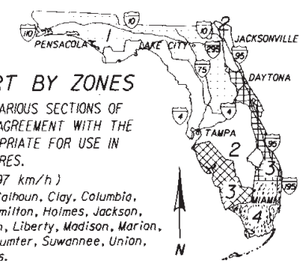

NUMBER OF WIND BEAMS FOR GIVEN DEPTH & WIND					
Wind (km/h)	No. Beams	Max Depth (Meters)	Wind (km/h)	No. Beams	Max Depth (Meters)
97	2	3.125	130	2	2.515
97	3	4.500	130	3	3.585
97	4	6.100	130	4	4.800
97	5	7.700	130	5	6.100
113	2	2.745	145	2	2.210
113	3	3.965	145	3	3.200
113	4	5.335	145	4	4.345
113	5	6.785	145	5	5.490

SIZE OF WIND BEAMS				
Size Of Zee	Length Of Sign (Meters)			
	2 Posts	3 Posts	4 Posts	5 Posts
*44 Z 0.49	0-4.270	4.290-6.100	6.125-8.230	8.255-10.670
	4.290-8.230	6.125-11.580	8.255-15.700	10.695-19.810
	Over 8.230	Over 11.580	Over 15.700	Over 19.810

GENERAL NOTES FOR ALUMINUM SUPPORTS

DESIGN SPECIFICATION: Standard specification for structural supports for highway signs, luminaries and traffic signals. AASHTO latest edition.

SHEET AND PLATES: Material used shall meet the requirements of Aluminum Association Alloy 6061-T6 and ASTM B209M. Sheets are to be degreased, etched, neutralized and treated with Alodine 1200, Iridite 14-2, Bondrite 721, or equal. No stenciling permitted on sheets.

MATERIALS: All aluminum materials shall meet the requirements of the Aluminum Association Alloy 6061-T6 and also the following ASTM specifications for the following: Sheets and plates B209; extruded tube, bars, rods & shapes B221M and standard structural shapes B308M.

WELDING RODS: Aluminum Association Alloy No. 5556 Filler Wire.

TOLERANCE: All above materials shall be in keeping with the governing ASTM specifications.

STEEL BOLTS, NUTS & WASHERS: All steel bolts, nuts and washers shall meet the requirements of the ASTM A235M and shall have an electroplated zinc coating Type LS applied in accordance with Standard Specifications 962-7.

ALTERNATE MATERIAL: Material used for sheet and plate shall also meet the requirements of Aluminum Association Alloy 5154-H38 and ASTM B209M. Material used for extruded bars, rods, shapes and tubes shall also meet the requirements of Aluminum Association Alloy 6351-T5 and ASTM B221M.

BASE CONNECTION: High strength bolts in the base connection shall be tightened only to the torque shown in the table. Overtightened base connections will not be accepted.

ALUMINUM BOLTS, NUTS & LOCKWASHERS: Aluminum bolts shall meet the requirements of Aluminum Association Alloy 2024-T4 Or 6061-T6 (ASTM B211M. The bolts shall have an anodic coating of at least 0.005 mm thick and be chromate sealed. Lock Washers shall meet the requirements of Aluminum Association Alloy 7075-T6 (ASTM B221M). Nuts shall meet the requirements of Aluminum Association Alloy 6262-T9 Or 6061-T6.

SIGN FACE: All sign face corners shall be rounded. See Sign Layout Sheet.

MATERIAL STRESSES: All allowable stresses are in accordance with the standard specifications for structural supports for highway signs, luminaires and traffic signals. AASHTO latest edition for all materials shown in the plans.

DESIGN WIND LOAD: See Wind Loading Chart By Zones for wind in kilometers per hour on flat sign area. The allowable working stress shall be increased by 40% for combination dead load and wind load.

SHOP DRAWINGS: When ground sign supports are fabricated in accordance with these plans no shop drawings are required. In the event the column length exceeds 610 mm above the length as shown in the plans, shop drawings will be required for those signs only for approval. However, shop drawings for sign panels, messages, lettering and quantities shall be submitted to traffic plans for approval.

FABRICATOR NOTE:

All Stiffened Base Plate Flanges and Fuse Plates shall be bolted to posts using high strength bolts. Bolts shall be tightened in the shop following a method approved by the engineer. Tightening shall be to such a degree so as to attain in each bolt the minimum residual tension specified in the tabulation below:

HIGH STRENGTH BOLTS (A325M)
MINIMUM RESIDUAL TENSION

BOLT SIZE	TENSION (N)
16	85 400
20	126 300
27	210 200
30	251 100
36	380 100

ALUMINUM

STATE OF FLORIDA DEPARTMENT OF TRANSPORTATION
STRUCTURES DESIGN

STANDARD ROADSIDE SIGN BREAK-AWAY PANEL DETAIL

	Names	Dates
Designed By	HHJ	01/67
Drawn By		
Checked By	CWB	01/67

Approved By

Revision No. | Sheet No. 1 of 4 | Index No. 9535

F.H.W.A. Approved:

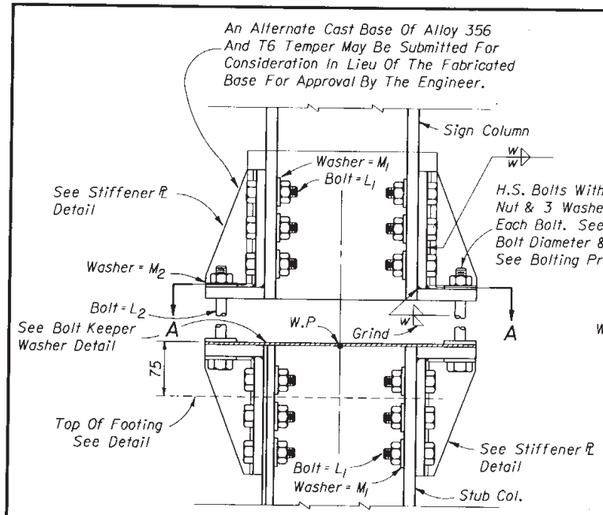

SIGN COL. & STUB COL. ELEVATION
WF SHAPES

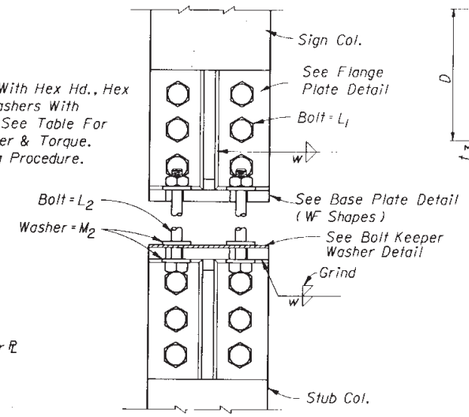

SIGN COL. & STUB COL.
SIDE ELEVATION
WF SHAPES

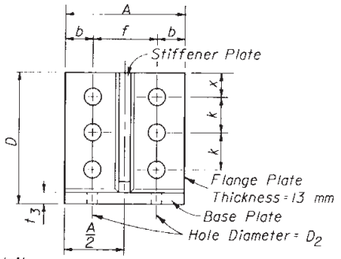

FLANGE PLATE
WF SHAPES

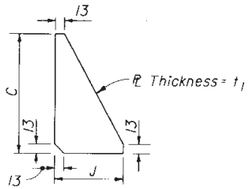

STIFFENER PLATE
WF SHAPES

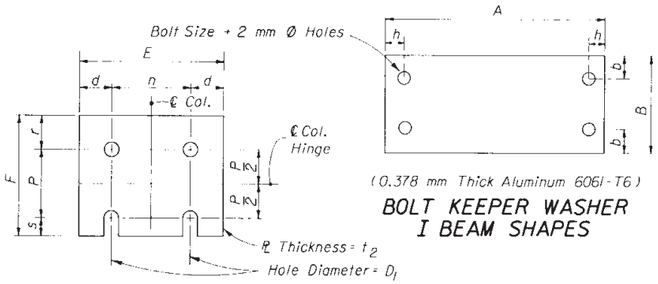

FUSE PLATE FOR I BEAMS

BOLT KEEPER WASHER
I BEAM SHAPES

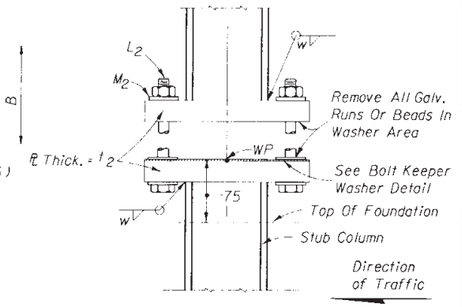

SIGN COLUMN & STUB COLUMN ELEVATION
I BEAM SHAPES

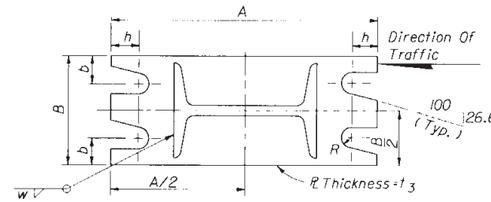

BASE PLATE FOR I BEAMS

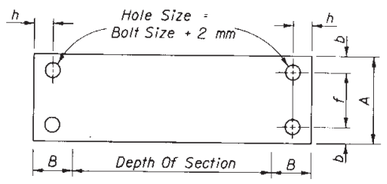

BOLT KEEPER WASHER DETAIL
WF SHAPES

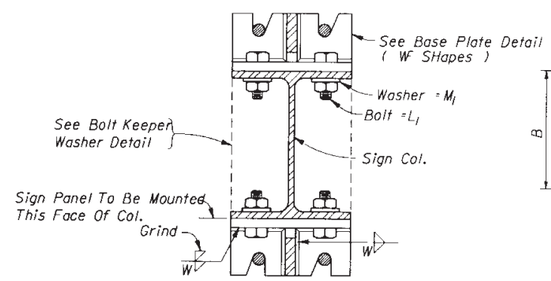

SECTION AA
WF SHAPES

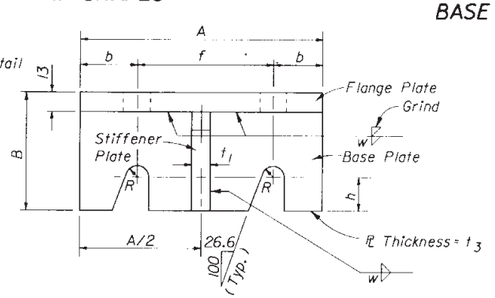

BASE PLATE FOR WF SHAPES

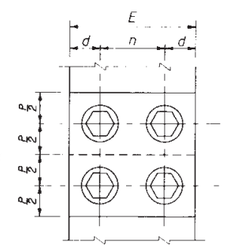

HINGE PLATE FOR I BEAMS

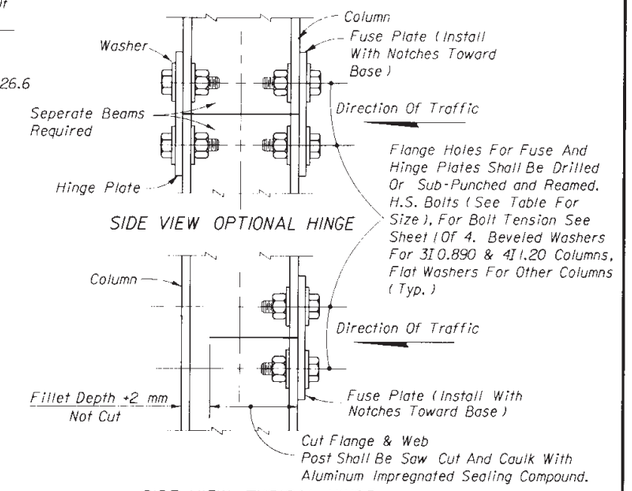

SIDE VIEW OPTIONAL HINGE

SIDE VIEW TYPICAL HINGE
FUSE & HINGE PLATE
DETAIL "B"

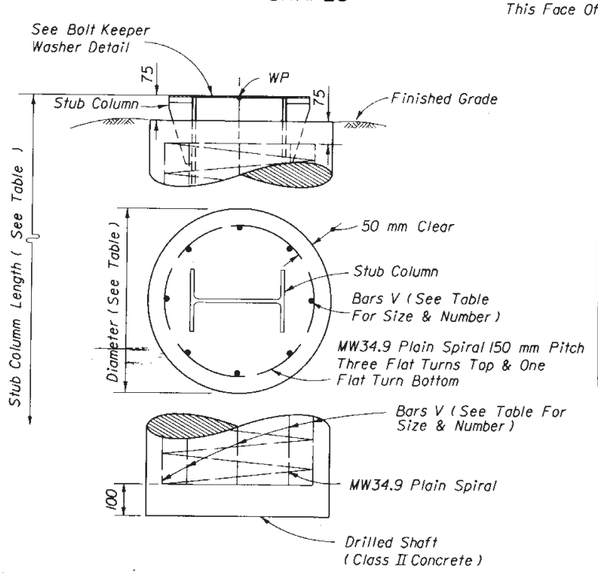

FOUNDATION DETAIL

NOTE: To prevent galvanic corrosion, reinforcing steel shall not be in contact with the aluminum stud column.

BASE CONNECTION DATA TABLE																						FUSE (HINGE) PLATE DATA TABLE										FOUNDATION DATA TABLE			
Dimension /Section	A	B	C	D	J	L (Dia.)	Bolt Size (Dia.) & Torque (L_2) (N • m)	M_1	M_2	D_2	R	x	b	f	h	k	t_1	t_3	w	Bolt Size	E	P	D_1	d	n	r	s	t_2	Dia.	Depth	Stub Length	Reinforcing Bars "V"
3I 0.89	191	76							38		9		19		22			25	6	16	76	38	17	19	38	19	23	16	457	457	~~457~~	6 - 15M
4I 1.20	191	76							38		9		19		22			25	6	16	76	38	17	19	38	19	23	16	457	457	457	6 - 15M
6WF 1.89	102	83	127	143	70	16	16 - 38.98	38	38	18	9	25	19	64	22	38	10	16	10	16	102	44	17	19	64	25	23	13	610	686	610	6 - 15M
8WF 2.67	133	83	127	143	70	16		38	38	18	9	25	32	70	22	38	13	16	13	20	134	50	21	32	70	29	23	13	610	991	762	8 - 15M
8WF 3.77	165	83	165	181	70	20		44	38	21	9	32	38	89	22	50	13	16	13	22	165	57	24	38	89	32	25	16	610	1.372	762	7 - 25M
10WF 5.18	203	83	203	219	70	22	20 - 62.59	50	44	24	11	38	57	89	22	64	13	16	14	25	177	70	27	44	89	38	29	16	610	1.905	915	7 - 35M
12WF 6.28	203	89	216	235	76	27		57	44	27	11	44	44	114	22	64	16	19	16	30	202	76	30	44	114	44	32	19	610	2.438	1.067	6 - 45M
12WF 8.32	254	92	254	273	79	27	22 - 72.31	57	50	27	12	44	57	140	25	83	16	19	19	36	229	83	37	44	140	48	35	19	610	3.277	1.219	10 - 45M

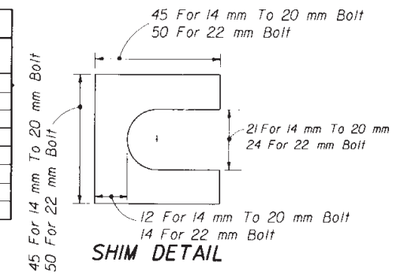

SHIM DETAIL

ALUMINUM– BASE, FOUNDATION & FUSE ℄ DETAILS

PROCEDURE FOR ASSEMBLY OF BASE CONNECTION: FOR BOLTS L_2

1. Assemble post to stub with bolts and with one flat washer on each bolt between plates.
2. Shim as required to plumb post (See Shim Detail).
3. Tighten all bolts the maximum possible with 300 mm to 380 mm wrench to bed washers and shims and to clean bolt threads then loosen each bolt in turn and retighten in a Systematic order to the prescribed torque (See Table).
4. Burr threads at junction with nut using a center punch to prevent nut loosening.

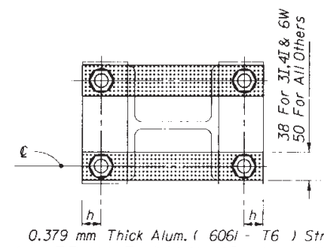

0.379 mm Thick Alum. (6061 - T6) Strip
ALTERNATE BOLT KEEPER WASHER
FOR I BEAM AND WF SHAPES

STATE OF FLORIDA DEPARTMENT OF TRANSPORTATION
STRUCTURES DESIGN

STANDARD ROADSIDE SIGN BREAK-AWAY POST DETAILS

	Names	Dates
Designed By		
Drawn By	H.H.J.	01/67
Checked By	C.W.B.	01/67
F.H.W.A. Approved:		

Approved By: Jerry J. Potter

Revision No.	Sheet No.	Index No.
94	2 of 4	9535

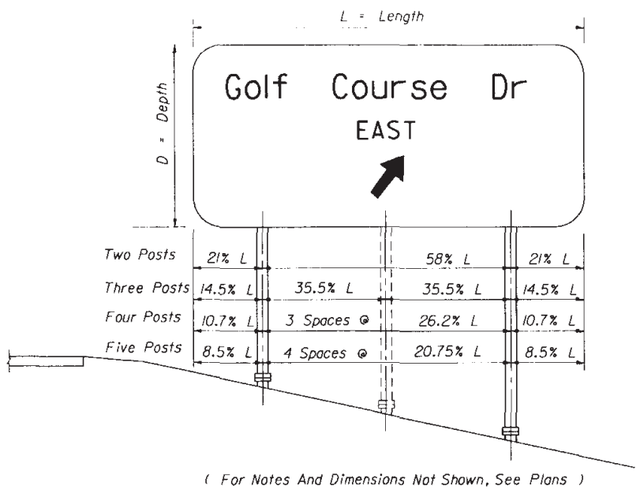

(For Notes And Dimensions Not Shown, See Plans)

TYPICAL ELEVATION

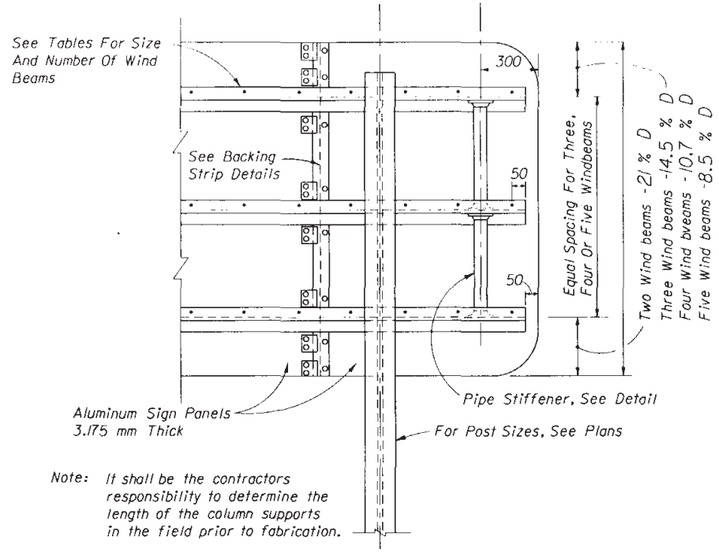

Note: It shall be the contractors responsibility to determine the length of the column supports in the field prior to fabrication.

PARTIAL REAR ELEVATION

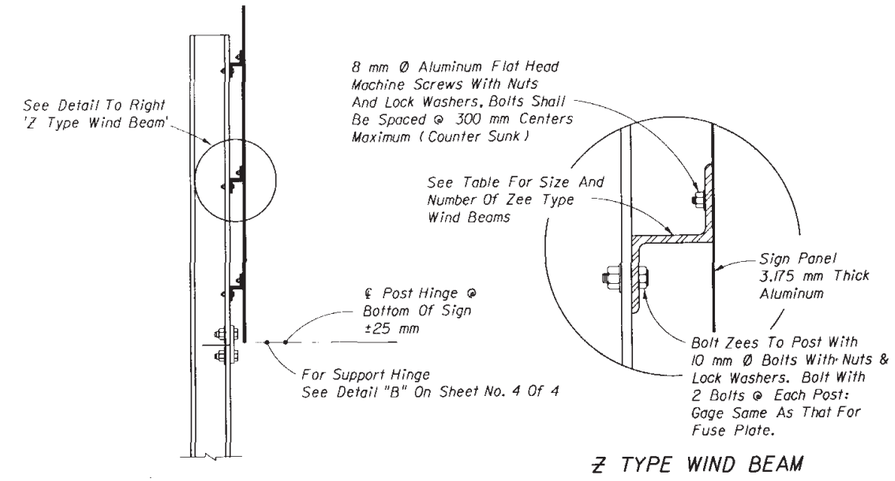

SIDE VIEW

Z TYPE WIND BEAM

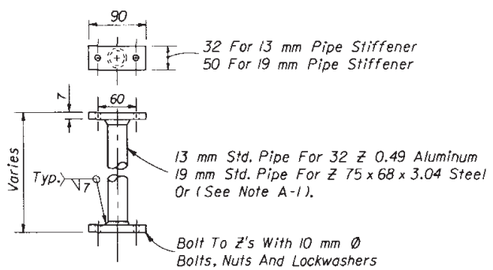

PIPE STIFFENER DETAIL

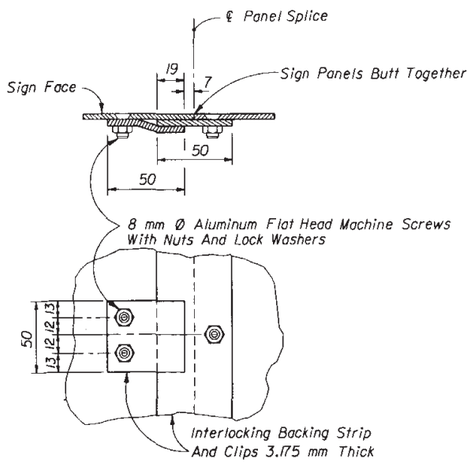

(Maximum Spacing Of Clips 300 mm)

BACKING STRIP DETAIL

WIND LOADING CHART BY ZONES

THE FOLLOWING VALUES FOR VARIOUS SECTIONS OF THE STATE ARE IN GENERAL AGREEMENT WITH THE ISOTACH MAP AND ARE APPROPRIATE FOR USE IN THE DESIGN OF SIGN STRUCTURES.

ZONE NO. 1 (97 km/h)

Alachua, Bradford, Baker, Bay, Calhoun, Clay, Columbia, Escambia, Gadsden, Gilchrist, Hamilton, Holmes, Jackson, Jefferson, Lafayette, Lake, Leon, Liberty, Madison, Marion, Okaloosa, Putnam, Santa Rosa, Sumter, Suwannee, Union, Walton And Washington Counties.

ZONE NO. 2 (113 km/h)

Citrus, Desoto, Dixie, Duval, Flagler, Franklin, Glades, Gulf, Hardee, Hendry, Hernando, Highlands, Hillsborough, Levy, Nassau, Okeechobee, Orange, Osceola, Pasco, Pinellas, Polk, Seminole, St. Johns, Taylor And Wakulla Counties.

ZONE NO. 3 (130 km/h)

Brevard, Charlotte, Collier, Indian River, Lee, Manatee, Martin, Palm Beach, Sarasota, St. Lucie And Volusia Counties.

ZONE NO. 4 (145 km/h)

Broward, Dade And Monroe Counties.

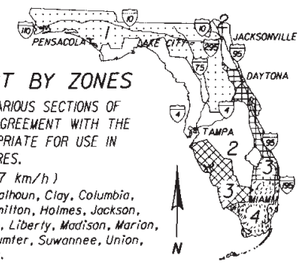

NUMBER OF WIND BEAMS FOR GIVEN DEPTH & WIND					
Wind (km/h)	No. Beams	Max Depth (Meters)	Wind (km/h)	No. Beams	Max Depth (Meters)
97	2	3.125	130	2	2.515
97	3	4.500	130	3	3.585
97	4	6.100	130	4	4.800
97	5	7.700	130	5	6.100
113	2	2.745	145	2	2.210
113	3	3.965	145	3	3.200
113	4	5.335	145	4	4.345
113	5	6.785	145	5	5.490

SIZE OF WIND BEAMS				
Size Of Zee	Length Of Sign (Meters)			
	2 Posts	3 Posts	4 Posts	5 Posts
*44 Z 0.49	0-4.270	4.290-6.100	6.125-8.230	8.255-10.670
Z 75 x 67 x 3.04	4.290-8.230	6.125-11.580	8.255-15.700	10.695-19.870
Z 75 x 67 x 4.45	Over 8.230	Over 11.580	Over 15.700	Over 19.810

*Note: Aluminum Zee-No steel equivalent available.

GENERAL NOTES FOR STEEL SUPPORTS

DESIGN SPECIFICATION: Standard specification for structural supports for highway signs, luminaries and traffic signals. AASHTO latest edition - Welding - latest edition of AWS structural welding code, latest AASHTO standard specifications for welding of structural steel highway bridges and FDOT standard specifications with supplement.

DESIGN LOADS: See wind loading chart by zones for wind in kilometers per hour on flat sign area. The allowable working stress shall be increased by 40% for combination dead load and wind load.

STRUCTURAL STEEL: All structural steel shall meet the requirements of ASTM A36M

STEEL BOLTS, NUTS AND LOCK WASHERS: Steel bolts, nuts and lock washers shall meet the following ASTM requirements; high strength bolts, nuts and washers ASTM A325M; all other steel bolts, nuts and washers, ASTM F568.

GALVANIZING OR METALIZING: All steel shapes, angles, tees, plates, ASTM F568 bolts, nuts and washers shall be hot dip galvanized or metalized after fabrication, hot dip galvanizing shall be in accordance with the requirements of ASTM A123 and/or A153.

SIGN PANELS: The material used shall meet the requirements of the Aluminum Association Alloy, 6061-T6 and ASTM B209M. The sheets are to degreased, etched, neutralized and treated with Alodine 1200, iridite 14-2, Bonderite 721, or equal. No stenciling permitted on sheets.

ALUMINUM BOLTS, NUTS & LOCKWASHERS: Aluminum bolts shall meet the requirements of Aluminum Association Alloy 2024-T4 Or 6061-T6 (ASTM B-211M). The bolts shall have an Anodic coating of at least 0.005 mm thick and be Chromate sealed. Lock washers shall meet the requirements of Aluminum Association Alloy 7075-T6 (ASTM B-221M). Nuts shall meet the requirements of Aluminum Association Alloy 6262-T9 Or 6061-T6.

TOLERANCE: All above materials shall be keeping with the ASTM specifications governing.

MATERIAL STRESSES: All allowable stresses are in accordance with the standard specifications for structural supports for highway signs, luminaires and traffic signals. AASHTO latest edition for all materials shown in the plans.

SHOP DRAWINGS: See shop drawing note Sheet 1 of 4.

BASE CONNECTION: High strength bolts in the base connection shall be tightened only to the torque shown in the table. Overtightened base connections will not be accepted.

FRICTION FUSE PLATE: Notched steel fuse plates shall conform to the requirements of ASTM A36M. All holes shall be drilled. All plate cuts shall, preferably, be saw cuts; however, flame cutting will be permitted provided all edges are ground. Metal projecting beyond the plane of the plate face will not be tolerated.

SIGN FACE: All sign face corners shall be rounded. See sign layout sheet.

ALUMINUM MATERIALS: All aluminum materials other than bolts, nuts and lock washers shall meet the requirements of the Aluminum Association Alloy 6061-T6 and also the following ASTM specifications for the following: sheet and plates B209M; extruted tube, bars, rod and shapes B221 and standard structural shapes B308M.

HIGH STRENGTH BOLTS : (ASTM A325M) shall have an electroplated zinc coating Type LS applied in accordance with Standard Specifications 962-7.

NOTE A-1: At the contractors option, aluminum zees and stiffeners may be used in lieu of structural steel zees and stiffeners. See Sheet No. 1 of 4 for aluminum zees and stiffeners.

FABRICATOR NOTE:
All friction type bolts shall be tightened in the shop following a method approved by the engineer. Tightening shall be to such a degree as to attain in each bolt the minimum residual tension specified in the tabulation below:

HIGH STRENGTH BOLTS (A325M)
MINIMUM RESIDUAL TENSION

BOLT SIZE	TENSION (N)
16	85 400
20	126 300
27	210 200
30	251 100
36	380 100

STEEL

STATE OF FLORIDA DEPARTMENT OF TRANSPORTATION
STRUCTURES DESIGN

STANDARD ROADSIDE SIGN BREAK-AWAY PANEL DETAIL

	Names	Dates
Designed By	HHJ	01/67
Drawn By		
Checked By	CWB	01/67

Approved By Jerry J. Potter

F.H.W.A. Approved:	Revision No.	Sheet No.	Index No.
	94	3 of 4	9535

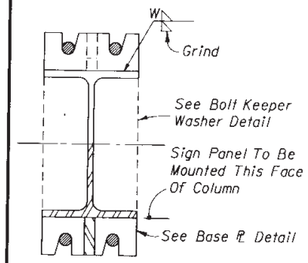

SECTION AA

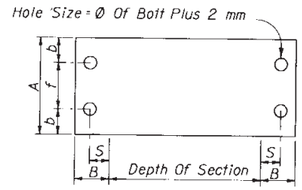

(1.016 mm Thick Aluminum 6061-T6)

BOLT KEEPER WASHER-WF SHAPES

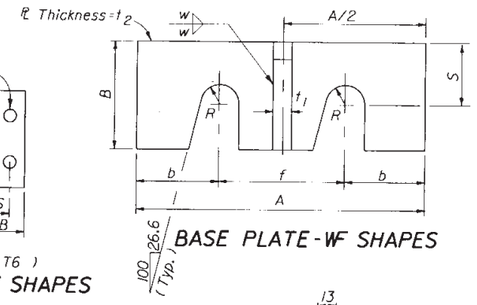

BASE PLATE-WF SHAPES

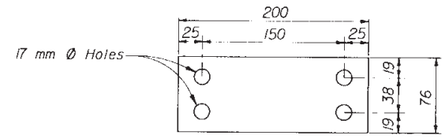

(0.379 mm Thick Aluminum 6061-T6)

BOLT KEEPER WASHER-I BEAM SHAPES

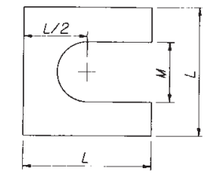

0.305 mm Thick & 0.813 mm Thick Shims (2 Each Per Column)

SHIM

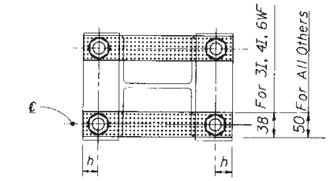

0.379 mm Thick Aluminum (6061-T6) Strips

ALTERNATE BOLT KEEPER WASHER FOR I-BEAM AND WF SHAPES

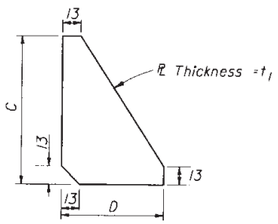

STIFFENER PLATE

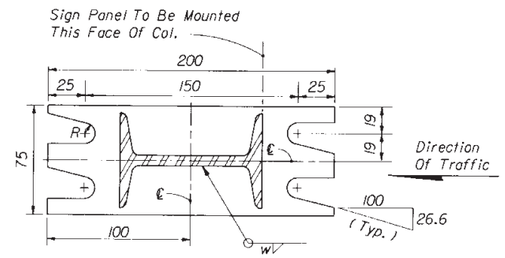

BASE PLATE-I BEAMS

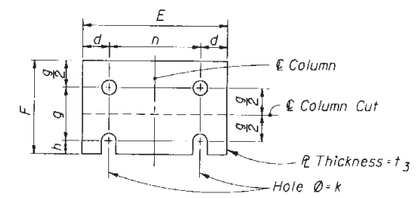

FUSE PLATE

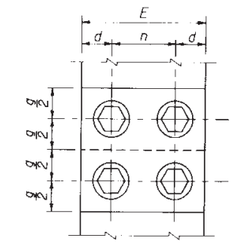

HINGE PLATE

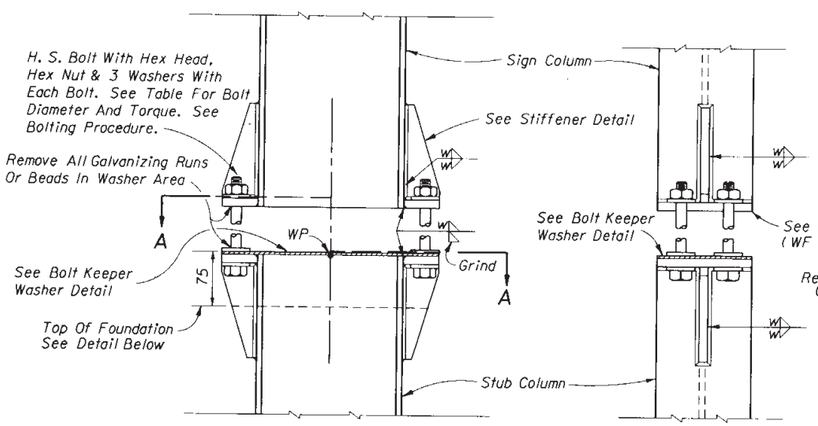

SIGN COLUMN & STUB COLUMN ELEVATION

WF SHAPES

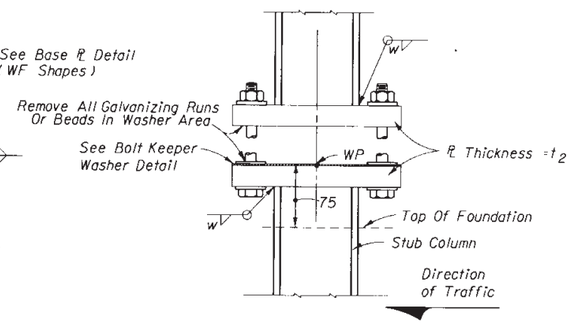

SIGN COLUMN & STUB COLUMN ELEVATION

I BEAM SHAPES

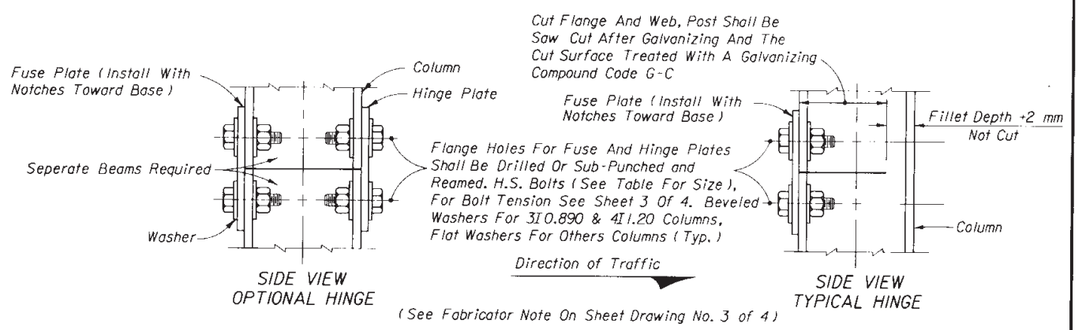

SIDE VIEW OPTIONAL HINGE

SIDE VIEW TYPICAL HINGE

(See Fabricator Note On Sheet Drawing No. 3 of 4)

FUSE & HINGE PLATES

DETAIL "B"

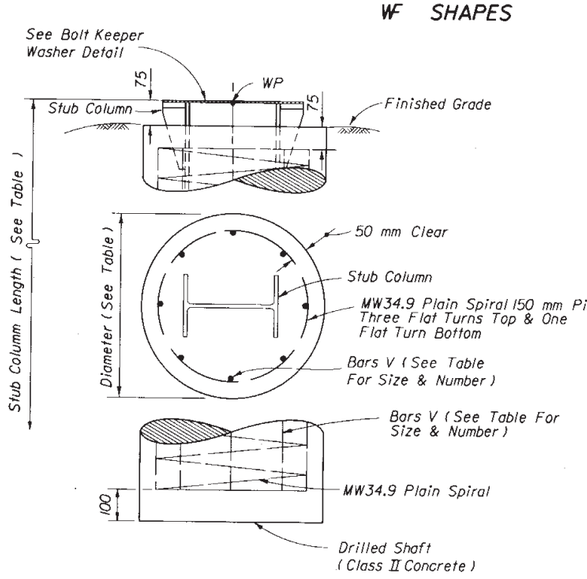

FOUNDATION DETAIL

BASE CONNECTION DATA													FUSE (HINGE) PLATE DATA										FOUNDATION DATA				SHIM	
Dimension / Section	A	B	C	D	Bolt Size & Torque (N•m)	R	b	f	s	t_1	t_2	W	E	n	d		g	h		k	t_3	Bolt Size	Dia.	Depth	Stub Length	Reinf. Bars V	L	M
3 I 2.59					16 - 38.98	9					25	6	75	37	19		56	19		17	13	16	458	459	457	6 -15M	34	17
4 I 3.5					16 - 38.98	9					25	6	78	40	19		56	19		17	13	16	458	600	600	6 -15M	34	17
6B x 5.44	100	50	100	50	16 - 38.98	9	19	63	28	13	13	6	100	56	22		56	19		17	13	16	610	825	685	8 -15M	34	17
8WF x 7.71	131	50	131	50	16 - 38.98	9	31	69	31	13	13	6	134	69	31		63	22		20	13	20	610	1.219	838	7 -25M	38	17
8WF x 10.9	163	56	163	56	20 - 62.59	10	38	88	34	13	16	8	164	88	38		88	28		27	16	27	610	1.676	991	8 -30M	44	20
10WF x 14.97	200	63	200	63	22 - 72.31	12	31	138	38	13	19	8	200	112	44		100	31		30	16	30	610	2.362	1.143	6 -45M	50	23
12WF x 18.14	200	69	200	69	27 - 83.04	13	31	138	41	13	19	11	200	100	50		112	34		33	19	36	610	3.048	1.372	9 -45M	56	27
12WF x 20.4	200	75	200	75	27 - 83.04	13	31	138	41	13	19	11	200	100	50		112	34		33	19	36	610	3.048	1.372	9 -45M	56	27

PROCEDURE FOR ASSEMBLY OF BASE CONNECTION

1. Assemble post to stub with bolts and with one flat washer on each end bolt between plates.
2. Shim as required to plumb post (see shim detail).
3. Tighten all bolts the maximum possible with 300 mm to 380 mm wrench to bed washers and shims and to clean bolt threads then loosen each bolt in turn and retighten in a systematic order to the prescribed torque (see table).
4. Burr threads at junction with nut using a center punch to prevent nut loosening.

NOTE:

Sections shown are for installation on right shoulder and in gore. Plate slot bevels are opposite hand from that shown for installations in the median.

STEEL — BASE, FOUNDATION & FUSE ℄ DETAILS

STATE OF FLORIDA DEPARTMENT OF TRANSPORTATION
STRUCTURES DESIGN

STANDARD ROADSIDE SIGN BREAK-AWAY POST DETAILS

	Names	Dates	Approved By
Designed By			Gerry J. Potter
Drawn By	HHJ	01/67	
Checked By	CWB	01/67	
F.H.W.A. Approved:			Revision No. 94 · Sheet No. 4 of 4 · Index No. 9535

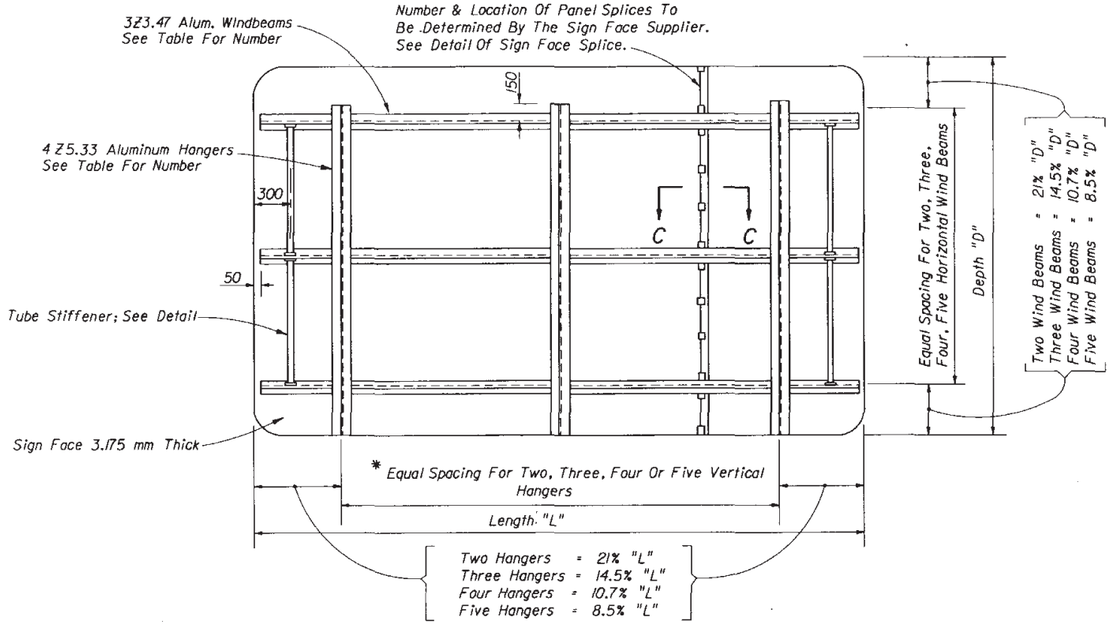

* Note: Spacing of vertical hangers may be varied slightly or as necessary to clear the truss struts and diagonals at panel points.

TYPICAL SIGN FACE ELEVATION FOR OVERHEAD TRUSS

Number Of 3 Z 3.47 Hoiz. Wind Beams For Sign Depth And Wind			Number Of 4 Z 5.33 Vertical Hanger Beams For Sign Length			
			2 Hangers	3 Hangers	4 Hangers	5 Hangers
Wind km/h	No. Beams	Max. Depth (Meters)	Sign Length (Meters)	Sign Length (Meters)	Sign Length (Meters)	Sign Length (Meters)
175	2	2.210	4.572	4.597 - 9.144	9.169 - 13.716	
175	3	3.200	4.572	4.597 - 9.144	9.169 - 13.716	
175	4	4.343	3.962	3.988 - 5.563	5.588 - 7.544	7.569 -9.550
175	5	5.486	3.962	3.988 - 5.563	5.588 - 7.544	7.569 -9.550
160	2	2.515	4.572	4.597 - 9.144	9.169 - 13.716	
160	3	3.581	4.572	4.597 - 6.782	6.807 - 9.144	9.169 - 11.582
160	4	4.800	4.572	4.597 - 6.782	6.807 - 9.144	9.169 - 11.582
160	5	6.096	3.531	3.556 - 4.978	5.004 - 6.756	6.782 - 8.534
145	2	2.743	4.572	4.597 - 9.144	9.169 - 13.716	
145	3	3.962	4.572	4.597 - 8.306	8.331 - 11.278	
145	4	5.334	4.572	4.597 - 8.306	8.331 - 11.278	
145	5	6.858	4.343	4.369 - 6.096	6.121 - 8.230	8.255 - 10.439
130	2	3.124	4.572	4.597 - 9.144	9.169 -13.716	
130	3	4.496	4.572	4.597 - 9.144	9.169 - 13.716	
130	4	6.096	4.572	4.597 - 7.849	7.874 - 10.617	

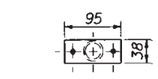

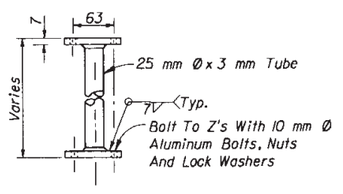

PIPE STIFFENER DETAIL

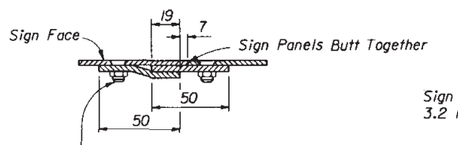

SECTION CC

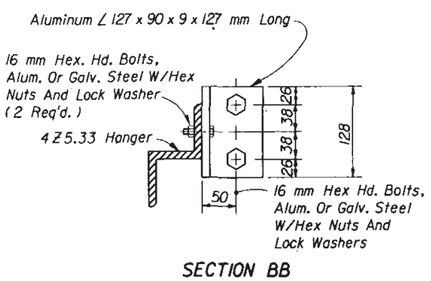

SECTION BB

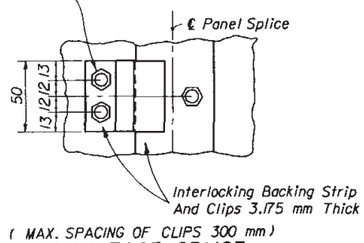

(MAX. SPACING OF CLIPS 300 mm)

SIGN FACE SPLICE

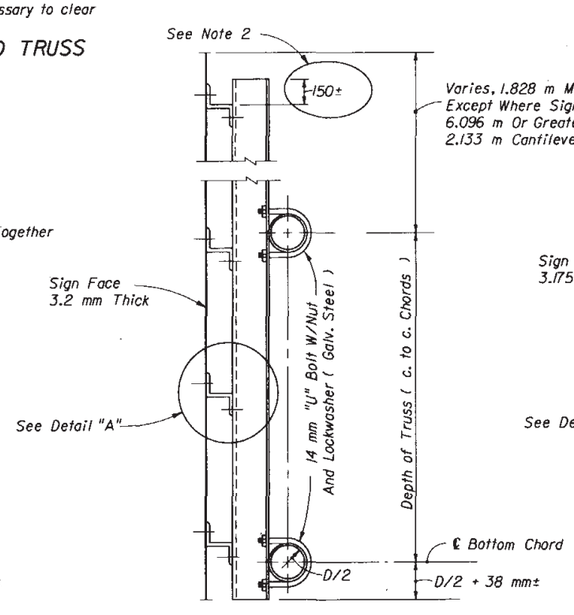

FOR ROUND CHORD MEMBERS

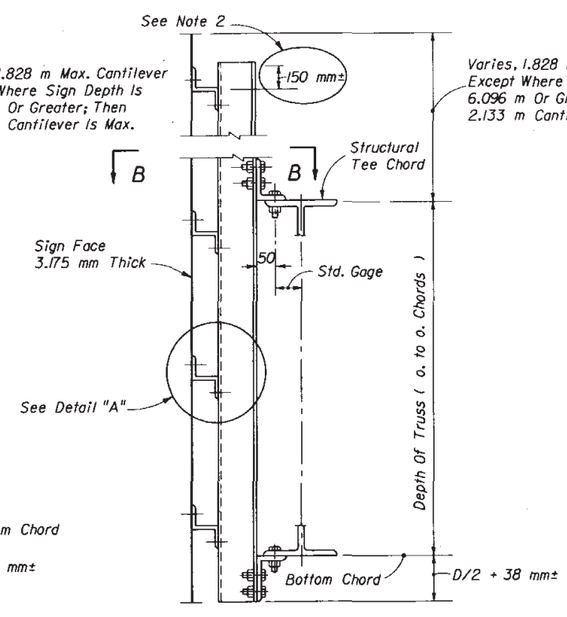

FOR ROLLED STRUCTURAL SHAPES

TYPICAL DETAILS OF SIGN & TRUSS CONNECTION
(LIGHTING NOT SHOWN)

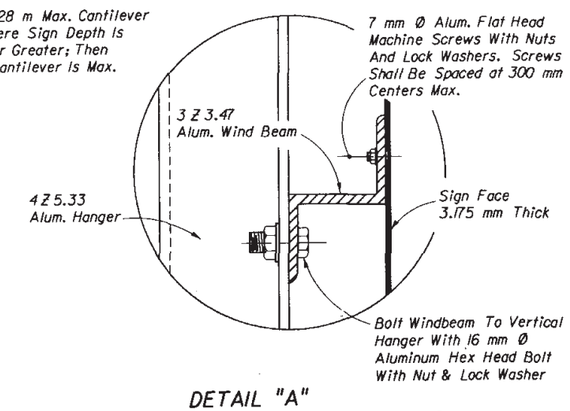

DETAIL "A"
(SHOWING ATTACHMENT OF SIGN FACE PANEL TO VERTICAL HANGER SUPPORTS)

DETAILS OF SIGN FACE & TRUSS CONNECTION

GENERAL NOTES

(1) For "General Notes" covering Material Specifications; see Sheets 1 Of 4 And 3 Of 4, Index 9535

(2) This dimension has to be adjusted for porcelain enameled sign panel.

STATE OF FLORIDA DEPARTMENT OF TRANSPORTATION
STRUCTURES DESIGN

ALUMINUM & STEEL OVERHEAD SIGN STRUCTURES

	Names	Dates
Designed By	C.W.B.	05/72
Drawn By		
Checked By	A.J.H.	05/72

Approved By: Benny E. Potter

Revision No.

Revision No. 94

Sheet No. 1 of 1

Index No. 11037

F.H.W.A. Approved:

Sign identification number	SIGN PROFILE	SIZE	SQ. m	TYPE OF SIGN BRACKET WIND ZONE 100	115	130	145
1	▽	600 x 600	0.16	2 - I	2 - I	2 - I	2 - I
2	▽	750 x 750	0.25	2 - I	2 - I	2 - I	2 - I
3	▽	900 x 900	0.36	2 - I	2 - I	2 - I	2 - I
4	▽	1.2 x 1.2	0.64	1 - II & 1 - I	1 - II & 1 - I	1 - II & 1 - I	1 - II & 1 - I
5	▽	1.5 x 1.5	1.00	DO NOT USE SINGLE COLUMN			
6	○	900 Ø	0.64	2 - I	2 - I	2 - I	2 - I
7	○	1.2 Ø	1.13	2 - II	2 - II	2 - II	2 - II
8	⬡	450 x 450	0.17	2 - I	2 - I	2 - I	2 - I
9	⬡	600 x 600	0.30	2 - I	2 - I	2 - I	2 - I
10	⬡	750 x 750	0.47	2 - I	2 - I	2 - I	2 - I
11	⬡	900 x 900	0.67	2 - I	2 - I	2 - I	2 - I
12	⬡	1.2 x 1.2	1.20	2 - II	2 - II	2 - II	2 - II
13	▭	300 x 600 600 x 600	0.50	1 - I 2 - I	1 - I 2 - I	1 - I 2 - I	1 - I 2 - I
14	▭	375 x 750 600 x 600	0.60	1 - I 2 - I	1 - I 2 - I	1 - I 2 - I	1 - I 2 - I
15	▭	300 x 600 600 x 750	0.59	1 - I 2 - I	1 - I 2 - I	1 - I 2 - I	1 - I 2 - I
16	▭	375 x 750 600 x 750	0.69	1 - I 2 - I	1 - I 2 - I	1 - I 2 - I	1 - I 2 - I
17	▭	375 x 750 900 x 900	1.00	1 - I 2 - I	1 - I 2 - I	1 - I 2 - I	1 - I 2 - I
18	▭	375 x 750 900 x 1.125	1.17	1 - I 2 - I	1 - I 2 - I	1 - I 2 - II	1 - I 2 - II
19	▭	375 x 750 1.2 x 1.2	1.55	1 - I 2 - II	1 - I 2 - II	1 - I 2 - II	1 - I 2 - II
20	▭	375 x 750 1.2 x 1.5	1.87	DO NOT USE SINGLE COLUMN			
21	▭	300 x 600 600 x 600 375 x 525	0.71	1 - I 2 - I 1 - I	1 - I 2 - I 1 - I	1 - I 2 - I 1 - I	1 - I 2 - I 1 - I
22	▭	375 x 750 600 x 600 375 x 525	0.81	1 - I 2 - I 1 - I	1 - I 2 - I 1 - I	1 - I 2 - I 1 - I	1 - I 2 - I 1 - I
23	▭	300 x 600 600 x 750 375 x 525	0.79	1 - I 2 - I 1 - I	1 - I 2 - I 1 - I	1 - I 2 - I 1 - I	1 - I 2 - I 1 - I
24	▭	375 x 750 600 x 750 375 x 525	0.89	1 - I 2 - I 1 - I	1 - I 2 - I 1 - I	1 - I 2 - I 1 - I	1 - I 2 - I 1 - I
25	▭	300 x 600 600 x 600	0.54	1 - I 2 - I	1 - I 2 - I	1 - I 2 - I	1 - I 2 - I
26	▭	600 x 600 375 x 525	0.56	1 - I 2 - I	1 - I 2 - I	1 - I 2 - I	1 - I 2 - I
27	▭	375 x 750 600 x 600	0.64	1 - I 2 - I	1 - I 2 - I	1 - I 2 - I	1 - I 2 - I
28	▭	300 x 600 600 x 750	0.63	1 - I 2 - I	1 - I 2 - I	1 - I 2 - I	1 - I 2 - I

Sign identification number	SIGN PROFILE	SIZE	SQ. m	TYPE OF SIGN BRACKET WIND ZONE 100	115	130	145
29	▭	600 x 750 375 x 525	0.65	1 - I 1 - I	1 - I 1 - I	1 - I 1 - I	1 - I 1 - I
30	▭	375 x 750 600 x 750	0.73	1 - I 1 - I	1 - I 1 - I	1 - I 1 - I	1 - I 1 - I
31	▭	375 x 525 900 x 750	0.87	1 - I 1 - I	1 - I 1 - I	1 - I 1 - I	1 - I 1 - I
32	▭	375 x 750 900 x 750	0.96	1 - I 2 - I	1 - I 2 - I	1 - I 1 - I	1 - I 1 - I
33	▭	300 x 600 600 x 600 375 x 525	0.74	1 - I 2 - I 1 - I	1 - I 2 - I 1 - I	1 - I 1 - I 1 - I	1 - I 2 - I 1 - I
34	▭	375 x 750 600 x 600 375 x 525	0.84	1 - I 2 - I 1 - I	1 - I 2 - I 1 - I	1 - I 1 - I 1 - I	1 - I 2 - I 1 - I
35	▭	300 x 600 600 x 750 375 x 525	0.83	1 - I 2 - I 1 - I	1 - I 2 - I 1 - I	1 - I 1 - I 1 - I	1 - I 2 - I 1 - I
36	▭	375 x 750 600 x 750 375 x 525	0.93	1 - I 2 - I 1 - I	1 - I 2 - I 1 - I	1 - I 1 - I 1 - I	1 - I 2 - I 1 - I
37	▭ ▭	300 x 600 , 300 x 600 600 x 600 , 600 x 600 375 x 525	1.24	1 - II 2 - II 1 - I	1 - II 2 - II 1 - I	1 - II 2 - II 1 - I	1 - II 2 - II 1 - I
38	▭ ▭	300 x 600 , 300 x 600 600 x 600 , 600 x 600 375 x 525 , 375 x 525	1.42	1 - II 2 - II 1 - II	1 - II 2 - II 1 - II	1 - II 2 - II 1 - II	1 - II 2 - II 1 - II
39	▭ ▭	300 x 600 , 300 x 600 600 x 600 , 600 x 600 375 x 525 , 375 x 525	1.47	1 - II 2 - II 1 - II	1 - II 2 - II 1 - II	1 - II 2 - II 1 - II	1 - II 2 - II 1 - II
40	▭ ▭	375 x 750 , 375 x 750 600 x 750 , 600 x 750 375 x 525 , 375 x 525	1.78	DO NOT USE SINGLE COLUMN			
41	▭ ▭	300 x 600 , 300 x 600 300 x 600 , 300 x 600 600 x 600 , 600 x 600 375 x 525 , 375 x 525	1.83	1 - II 1 - II 2 - II 1 - II	1 - II 1 - II 2 - II 1 - II	1 - II 1 - II 2 - II 1 - II	1 - II 1 - II 2 - II 1 - II
42	▭ ▭	375 x 525 600 x 600 300 x 600 , 300 x 600 600 x 600 , 600 x 600 375 x 525 , 375 x 525	2.03	1 - II 2 - I 1 - II 2 - II 1 - II	1 - II 2 - I 1 - II 2 - II 1 - II	1 - II 2 - I 1 - II 2 - II 1 - II	1 - II 2 - I 1 - II 2 - II 1 - II
43	▭ ▭	300 x 600 600 x 750 375 x 525 300 x 600 , 300 x 600 600 x 600 , 600 x 600 375 x 525 , 375 x 525	2.30	DO NOT USE SINGLE COLUMN			
44	▭	450 x 300	0.14	1 - I	1 - I	1 - I	1 - I
45	▭	300 x 900	0.27	2 - I	2 - I	2 - I	2 - I
46	▭	450 x 600	0.27	1 - I	1 - I	1 - I	1 - I
47	▭	600 x 450	0.27	2 - I	2 - I	2 - I	2 - I
48	◇	450 x 450 225 x 300	0.27	2 - I 1 - I	2 - I 1 - I	2 - I 1 - I	2 - I 1 - I
49	▭	450 x 750	0.34	2 - I	2 - I	2 - I	2 - I
50	▷	750 x 1.0	0.35	2 - I	2 - I	2 - I	2 - I
51	▭	600 x 600	0.36	2 - I	2 - I	2 - I	2 - I

Sign identification number	SIGN PROFILE	SIZE	SQ. m	TYPE OF SIGN BRACKET WIND ZONE 100	115	130	145
52	◇	600 x 600	0.36	1 - I	1 - I	1 - I	1 - I
53	▭	450 x 900	0.41		1 - I	1 - I	1 - I
54	⬠	750 x 750	0.44	1 - I	1 - I	1 - I	2 - I
55	▭	750 x 600	0.45	1 - I	1 - I	1 - I	1 - I
56	▷	900 x 1.2	0.52	2 - II	2 - II	2 - II	2 - II
57	▭	600 x 900	0.54	2 - I	2 - I	1 - I	2 - I
58	▭	900 x 600	0.54	2 - I	2 - I	2 - I	2 - I
59	▭	750 x 750	0.56	2 - I	2 - I	2 - I	2 - I
60	◇	750 x 750	0.56	2 - I	2 - I	2 - I	2 - I
61	⬠	900 x 900	0.63	2 - I	2 - I	2 - I	2 - I
62	▭	750 x 900	0.68	1 - I	2 - I	2 - I	2 - I
63	▭	900 x 750	0.68	2 - I	2 - I	2 - I	2 - I
64	▭	600 x 1.2	0.72	2 - II	2 - II	2 - II	2 - II
65	▭ ⬡	300 x 900 750 x 750	0.74	1 - I 2 - I	1 - I 2 - I	1 - I 2 - I	1 - I 2 - I
66	▭	750 x 1.05	0.79	2 - I	2 - I	2 - I	2 - II
67	▭	900 x 900	0.81	2 - I	2 - I	2 - I	2 - I
68	◇	900 x 900	0.81	2 - I & 1 - II	2 - I & 1 - II	2 - I & 1 - II	2 - I & 1 - II
69	▭ ▭	300 x 900 750 x 750	0.83	1 - I 2 - I	1 - I 2 - I	1 - I 2 - I	1 - I 2 - I
70	◇ ▭	750 x 750 450 x 600	0.83	2 - I 2 - I	2 - I 2 - I	2 - I 2 - I	3 - I 2 - I
71	▷	1.2 x 1.6	0.90	DO NOT USE SINGLE COLUMN			
72	▭	750 x 1.2	0.90	2 - II	2 - II	2 - II	2 - II
73	▭ ⬡	300 x 900 900 x 900	0.94	1 - I 2 - I	1 - I 2 - I	1 - I 2 - I	1 - I 2 - I
74	▭	750 x 1.35	1.01	DO NOT USE SINGLE COLUMN			
75	▭	900 x 1.2	1.08	2 - II	2 - II	2 - II	2 - II
76	▭	1.2 x 900	1.08	2 - I	2 - I	2 - I	2 - I
77	◇ ▭	900 x 900 450 x 600	1.08	2 - I & 1 - II 2 - I	2 - I & 1 - II 2 - I	2 - I & 1 - II 2 - I	2 - I & 1 - II 2 - I
78	⬠	1.2 x 1.2	1.08	1 - I & 1 - II	1 - I & 1 - II	1 - I & 1 - II	1 - I & 1 - II
79	▭	750 x 1.5	1.13	DO NOT USE SINGLE COLUMN			
80	▭	1.2 x 1.2	1.44	2 - II	2 - II	2 - II	2 - II
81	◇	1.2 x 1.2	1.44	2 - I & 1 - II	2 - I & 1 - II	2 - I & 1 - II	2 - I & 1 - II
82	▭	750 x 1.95	1.46	DO NOT USE SINGLE COLUMN			
83	▭	750 x 2.1	1.57	DO NOT USE SINGLE COLUMN			
84	▭	1.2 x 1.35	1.62	DO NOT USE SINGLE COLUMN			
85	▭	1.05 x 1.65	1.73	DO NOT USE SINGLE COLUMN			
86	▭	1.5 x 1.2	1.80	3 - II	3 - II	3 - II	3 - II
87	▭	1.65 x 1.2	1.98	3 - II	3 - II	3 - II	3 - II

Sign identification number	SIGN PROFILE	SIZE	SQ. m	TYPE OF SIGN BRACKET WIND ZONE 100	115	130	145
88	▭	1.5 x 1.8	2.70	DO NOT USE SINGLE COLUMN			
89	▭	2.4 x 1.2	2.88	DO NOT USE SINGLE COLUMN			
90	▭	600 x 1.95	1.17	DO NOT USE SINGLE COLUMN			
91	▭	900 x 1.95	1.76	DO NOT USE SINGLE COLUMN			

STATE OF FLORIDA DEPARTMENT OF TRANSPORTATION
STRUCTURES DESIGN

SINGLE COLUMN GROUND SIGNS

	Names	Dates
Designed By	CK	03-76
Drawn By		
Checked By	CWB	03-76

Approved By: Gerry Spotten

Revision No.	Sheet No.	Index No.
94	1 of 3	11860

F.H.W.A. Approved:

GENERAL SPECIFICATIONS : Florida Department of Transportation Standard Specifications for Road and Bridge Construction (1991) and Supplements thereto.

DESIGN SPECIFICATIONS : Standard Specifications for Structural Supports for Highway Signs, Luminaires and Traffic Signals AASHTO 1985.

ALUMINUM : Except as noted below, Aluminum Materials shall meet the requirements of Aluminum Association Alloy 6061-T6 (ASTM B209M, B221M, or B308M.

1. Sign Brackets --------- Alloy 6063-T6 (ASTM B221M)
2. Permitted Alternate for Sheets and Plates--- Alloy 5154-H38 ASTM-B209M)

CONCRETE : All concrete shall be Class I (Special), the specified compressive strength at 28 days (f'c) shall be 21 MPa min.

SIGN PANELS : Sign Panels shall be 2 mm min. thick Aluminum Plate with all corners rounded. See sign layout sheet. Panels are to be degreased, etched, neutralized and treated with Alodine 1200, Irdine 14-2, Bonderite 721 or equal. No stenciling permitted on panels.

ALUMINUM BOLTS, NUTS & LOCKWASHERS : Aluminum bolts shall meet the requirements of Aluminum Association Alloy 2024-T4 or 6061-T6 (ASTM B211M). The Bolts shall have an Andoic Coating of at least .005 mm thick and be chromate sealed . Lockwashers shall meet the requirements of Aluminum Association Alloy 7075-T6 (ASTM B221M). Nuts shall meet the requirements of Aluminum Association Alloy 6262-T9 or 6061-T6.

STAINLESS STEEL BOLTS, NUTS AND LOCKWASHERS : Stainless Steel Bolts, Nuts and Lockwashers conforming to AISI A316 may be provided in lieu of Aluminum Bolts, Nuts and Washers.

U-BOLTS, NUTS & LOCKWASHERS : U-Bolts,Nuts and Lockwashers shall meet the requirements of ASTM A-307 and shall be galvanized in accordance with ASTM A153.

INSTALLING FRANGIBLE COLUMN SUPPORTS : Columns (Posts) may be installed by driving the columns in accordance with index Nos. 11861 thru 11865, or as an alternate method the contractor may set the columns (Posts) to the depth indicated in preformed holes backfilled with suitable material tamped in layers not thicker than 150 mm to provide adequate compaction.

SHOP DRAWINGS : When Type "C" ground sign supports are furnished and fabricated in accordance with these plans, shop drawings will NOT be required for approval by the Engineer.

HOW TO USE THIS TABLE : Select the appropriate Sign Profile and Size to determine the Sign Identification Number. If the exact Sign Size of all Components are not listed, select the appropriate profile and larger Component Sizes. This table also gives the Quantity and Type of Sign Brackets required for each Sign for each Wind Zone. Where the Sign Size is given as a Vertical and Horizontal Dimension, the Vertical Dimension (Depth) is given first and the Horizontal Dimension (Length) is given last. For Column Sizes, Heights and Footings see appropriate (Wind Zone or Height = 4.2 m Max.) sheets titled "Column Sizes, Column Heights and Footings " Index Numbers 11861 thru 11865. No Shop or Field Splice is allowed in Sign Panels. All Panels shall be furnished in one piece.

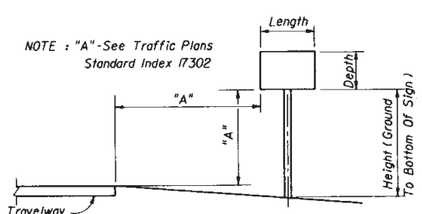

TYPICAL SECTION

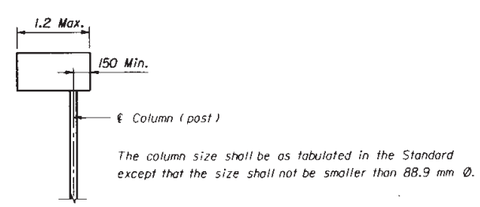

The column size shall be as tabulated in the Standard except that the size shall not be smaller than 88.9 mm Ø.

CANTILEVER SIGN

Note: All cantilever sign installations shall comply with standard Index 17302. The sign shall be supported by an aluminum round column with concrete footing and breakaway support. All sign brackets shall be Type II.

WIND LOADING

ZONE NO. 1 (100 km/h.)

Alachua, Bradford, Baker, Bay, Calhoun, Columbia, Escambia, Gadsden, Gilchrist, Hamilton, Holmes, Jackson, Jefferson, Lafayette, Lake, Leon, Liberty, Madison, Marion, Okaloosa, Putnam, Santa Rosa, Sumter, Suwannee, Union, Walton and Washington Counties.

ZONE NO. 2 (115 km/h)

Citrus, De Soto, Dixie, Duval, Flagler, Franklin, Glades, Gulf, Hardee, Hendry, Hernando, Highlands, Hillsborough, Levy, Nassau, Okeechobee, Orange, Osceola, Pasco, Pinellas, Polk, Seminole, St. Johns, Taylor and Wakulla Counties.

ZONE NO. 3 (130 km/h)

Brevard, Charlotte, Collier, Indian River, Lee, Manatee, Martin, Palm Beach, Sarasota, St. Lucie and Volusia Counties.

ZONE NO. 4 (145 km/h)

Broward, Dade and Monroe Counties.

STATE OF FLORIDA DEPARTMENT OF TRANSPORTATION
ROAD DESIGN

SINGLE COLUMN GROUND SIGNS

	Names	Dates
Designed By	CK	03-76
Drawn By		
Checked By	CWB	03-76

Approved By Jerry G. Potter

Revision No.	Sheet No.	Index No.
94	2 of 3	11860

F.H.W.A. Approved:

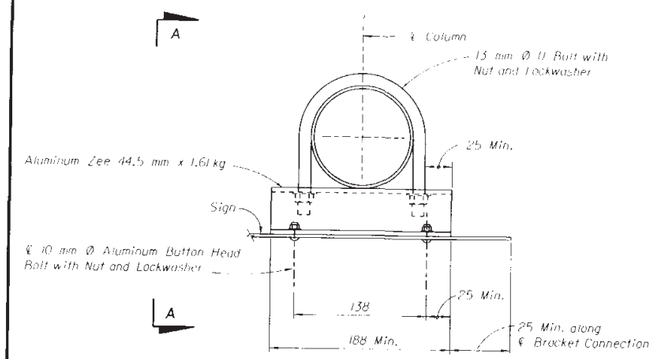

TYPE I BRACKET

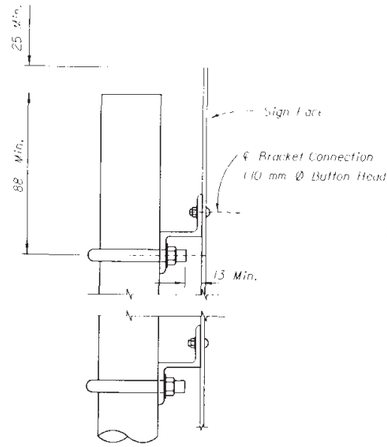

VIEW A-A

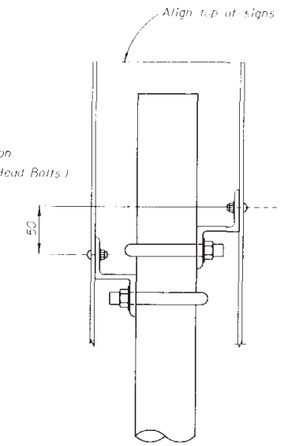

NOTE: Use profile of largest sign and height to bottom of largest sign to determine column size.

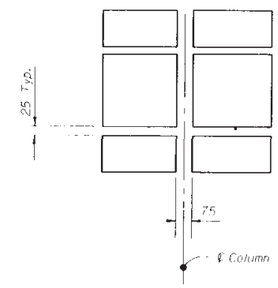

SIGN CLEARANCE

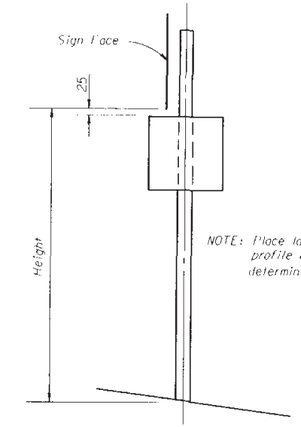

NOTE: Place largest sign on top, use profile of largest sign to determine column size.

SIGNS AT 90°

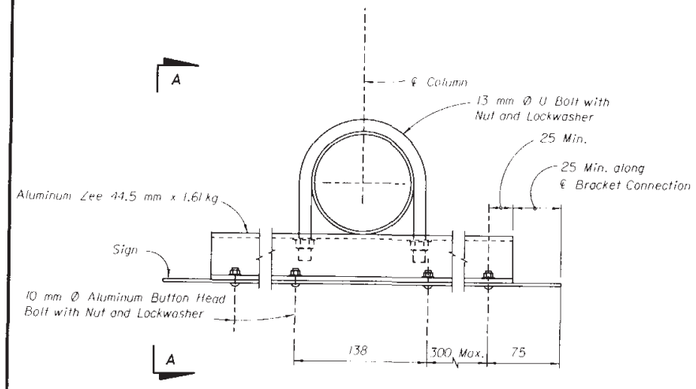

TYPE II BRACKET
(SINGLE SIGN)

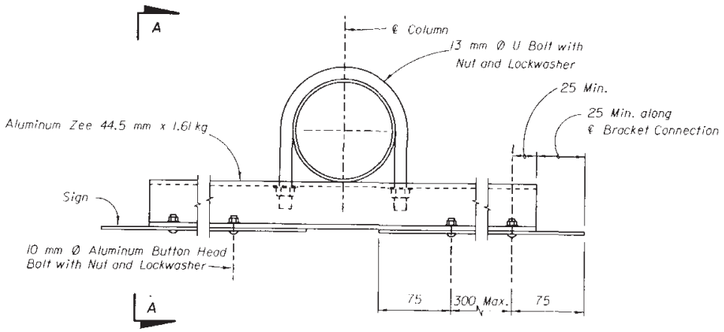

TYPE II BRACKET
(DOUBLE SIGNS)

NOTE: 8 mm Ø Stainless Steel Hex Head Bolts with Flat Washer under Head and Lockwasher under Nut may be used in lieu of 10 mm Ø Aluminum Button Head Bolts.

SIGNS BACK-TO-BACK

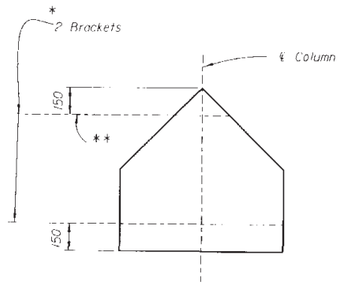

SCHOOL

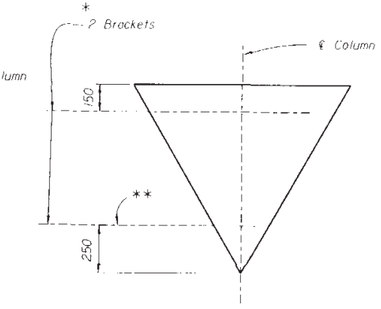

YIELD

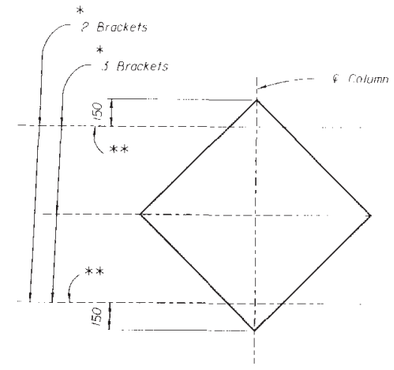

DIAMOND

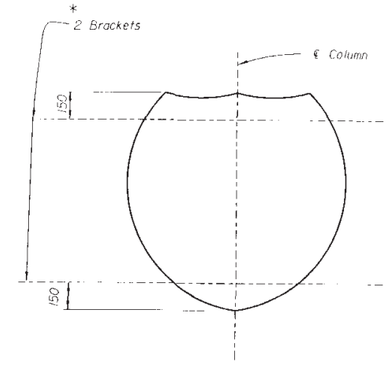

SHIELD

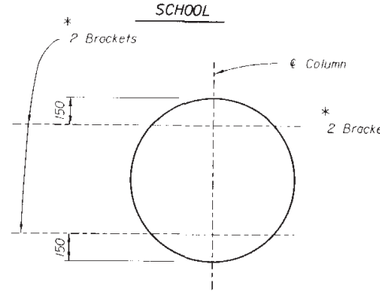

RAILROAD

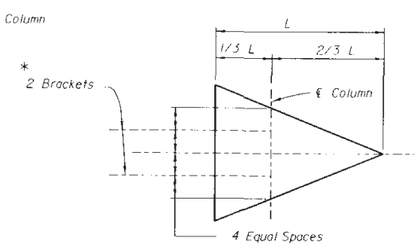

PENDANT

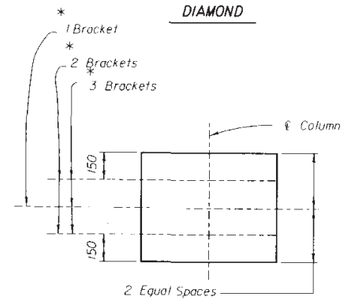

RECTANGLE

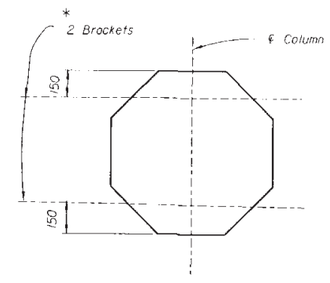

STOP

BRACKET LOCATIONS
(SEE VIEW A-A)

* NOTE:
The above Bracket locations apply at the ℄ of Bracket-Sign Connection (10 mm Ø Button Head Bolts). See View A-A. The locations also apply at Double Signs configurations. When installing back-to-back signs the topmost bracket location of one of the signs will require adjustment as shown on the above detail.

** NOTE: Use Type I Bracket at the apex location (always)

STATE OF FLORIDA DEPARTMENT OF TRANSPORTATION
STRUCTURES DESIGN

SINGLE COLUMN GROUND SIGNS

	Names	Dates
Designed By	AJG	9-91
Drawn By	WEH	9-91
Checked By	TJB	9-91

Approved By: Jerry J. Potter

F.H.W.A. Approved:	Revision No.	Sheet No.	Index No.
	94	3 of 3	11860

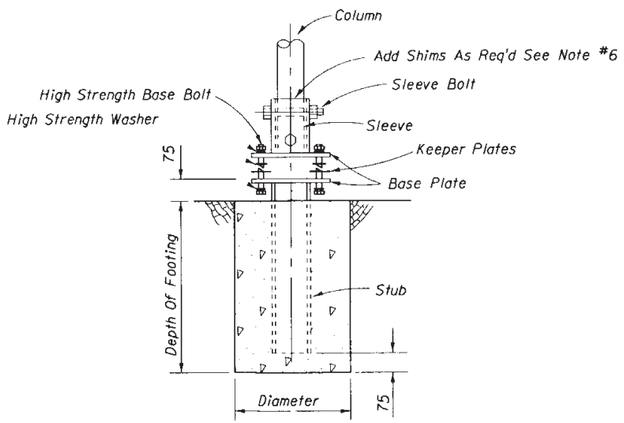

SLIP BASE AND FOOTING DETAIL

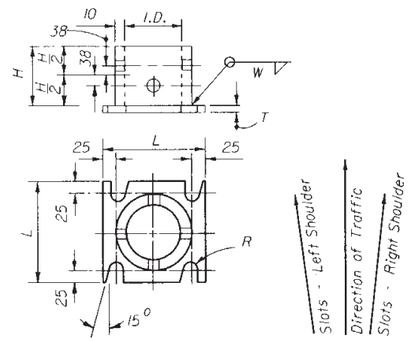

SLEEVE & BASE PLATE DETAILS

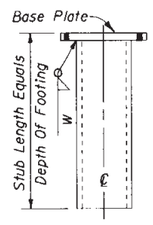

Stub Size Equals Min. Sleeve Size Or Longer

STUB DETAIL

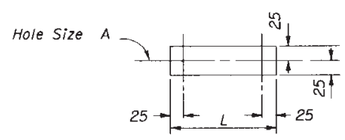

1.00. mm Thick Alum. Strip-2 Req'd Per Base

BOLT KEEPER DETAIL

SLIP BASE DATA									
Column Size	Sleeve I.D. (Max)	Sleeve Wall Thickness	Sleeve Height	Weld W	Base Plate LxLxT	Radius "R"	Base Bolt Size	Base Bolt Torque N•m	Hole Size A
88.9 x 4.8	90.4	10	150	16	200 X 200 X 19	9	16 Ø X 75	39	18
101.6 x 4.8	103.1	10	150	16	200 X 200 X 19	9	16 Ø X 75	39	18
101.6 x 6.4	103.1	10	150	16	200 X 200 X 19	9	16 Ø X 75	39	18
114.3 x 6.4	115.8	10	150	16	200 X 200 X 22	9	16 Ø X 85	39	18
127.0 x 6.4	128.5	10	175	16	200 X 200 X 22	9	16 Ø X 85	39	18
139.7 x 6.4	141.2	10	175	17.5	215 X 215 X 22	10	20 Ø X 85	62	22
152.4 x 6.4	153.9	10	200	17.5	225 X 225 X 25	10	20 Ø X 90	62	22
165.1 x 6.4	166.6	10	200	19	240 X 240 X 25	10	20 Ø X 90	62	22
177.8 x 6.4	179.3	10	225	19	250 X 250 X 25	10	20 Ø X 90	62	22
190.5 x 6.4	192.0	10	225	19	265 X 265 X 25	12	24 Ø X 95	72	27
203.2 x 6.4	204.7	10	250	19	275 X 275 X 25	12	24 Ø X 95	72	27

Note: Unless noted otherwise, all dimensions are in mm.

NOTES

1. Work this Index with Index Nos. 11860 and 11865.

2. To determine column (post) size and footing requirements use the required Sign Identification Number and sign Height (H), shown in the table on sheet 2 of 2. Design for Heights (H) lower than those listed in the table are included in Index No. 11865.

3. Single Column installations are not allowed for heights (H) exceeding the maximum height shown in the table, and for sign profiles (Sign Identification Numbers) without any design tabulated; in this event, the sign(s) will have to be supported by multiple columns (posts) featuring breakaway devices. See Index No. 9535.

4. Column (post) material shall be aluminum. The size is given as outside diameter and wall thickness. Columns (posts) larger than 75 mm x 3.2 mm are non-frangible and shall be installed with breakaway supports and will have concrete footings and slip bases.

5. Breakaway Supports : The column support shall be set in a concrete footing, sized as shown in the table. The first dimension indicates the diameter and the second dimension the depth into the ground. In all cases the ground is to be considered as undisturbed earth, road material, or properly compacted fill.

   Frangible supports: Frangible Supports do not require footings. The column (post) shall be driven into the ground to the depth indicated.

6. SLIP BASE NOTES :
   a) The inside Diameter (I.D.) of the sleeve shall be no more than 1.5 mm larger than the Outside Diameter (O.D.) of the Column.
   b) The sleeve bolts shall be 13 mm Ø with locknuts. The bolts shall be galvanized steel (ASTM A-307) or Aluminum Association Alloy 2024-T4 or 6061-T6 (ASTM B-211M).
   c) The base bolts, nuts and washers shall be high strength ASTM A-325 M and shall have an electroplated zinc coating SC3, Type II applied in accordance with ASTM B633.
   d) An alternate cast base of aluminum alloy 356 and T6 temper in lieu of the fabrication base may be submitted for approval by the Engineer. If a cast base is used the stub will be the same as the column and will be bolted to the casting.
   e) Assemble the slip base connection in the following manner :
      Connect column to sleeve using two (2) 13 mm Ø machine bolts.
      Assemble top base plate to stub base plate using four (4) high strength bolts with three (3) hardened washers per bolt. One (1) washer per bolt and two (2) bolt keeper plates go between the base plate.
      Use shim stock as required to plumb the column.
      Tighten all bolts the maximum possible with a 300 to 375 mm wrench to bed the washers and shims and to clear the bolt threads. Loosen each bolt (1) turn and retighten to the prescribed torque (see table). Bolts shall be tightened with properly calibrated wrenches under the supervision of the project engineer.
      Burr threads at junction with nut using a center punch to prevent nut loosening.
   f) Use galvanized steel shims to obtain a tight fit between the column face and the sleeve. Place shims in all quadrants between the 13 mm Ø sleeve bolts. The shims length shall be 25 mm shorter than the height of the sleeve.

100 km/h WIND LOADING

COLUMN SIZE, COLUMN HEIGHT & COLUMN FOOTINGS

STATE OF FLORIDA DEPARTMENT OF TRANSPORTATION
STRUCTURES DESIGN

SINGLE COLUMN GROUND SIGNS

	Names	Dates
Designed By		
Drawn By		4-94
Checked By		

Approved By Gerry Potter

F.H.W.A. Approved:

Revision No.	Sheet No.	Index No.
94	1 of 2	11861

COL. SIZE	50.8 x 3.2	63.5 x 3.2	76.2 x 3.2	88.9 x 4.8	101.6 x 4.8	101.6 x 6.4	114.3 x 6.4	127.0 x 6.4	139.7 x 6.4	152.4 x 6.4	165.1 x 6.4
FOOTING	0 x 600	0 x 675	0 x 750	450 x 750	450 x 750	450 x 750	450 x 750	450 x 825	450 x 900	450 x 975	600 x 900
Sign Identification Number	HEIGHT (m)										
1			4.2+ - 7.5								
2			4.2+ - 6.6	6.6+ - 7.5							
3			3.9+ - 6.3	6.3+ - 7.5							
4	To 1.8	1.8+ - 3.3	3.3+ - 3.9	3.9+ - 6.9	6.9+ - 7.5						
5											
6			2.7+ - 3.9	3.9+ - 6.9	6.9+ - 7.5						
7		To 1.8	1.8+ - 3.0	3.0+ - 4.8	4.8+ - 6.3	6.3+ - 7.5					
8		4.2+ - 6.0	6.0+ - 7.5								
9			4.2+ - 6.6	6.6+ - 7.5							
10			3.6+ - 5.1	5.1+ - 7.5							
11			2.7+ - 3.9	3.9+ - 6.9	6.9+ - 7.5						
12			To 2.4	2.4+ - 4.2	4.2+ - 5.4	5.4+ - 6.9	6.9+ - 7.5				
13			3.6+ - 5.1	5.1+ - 7.5							
14			3.3+ - 4.8	4.8+ - 7.5							
15			3.0+ - 4.2	4.2+ - 7.2	7.2+ - 7.5						
16			2.7+ - 4.2	4.2+ - 6.9	6.9+ - 7.5						
17		To 2.1	2.1 - 3.0	3.0+ - 5.1	5.1+ - 6.3	6.3+ - 7.5					
18			To 2.7	2.7+ - 4.2	4.2+ - 5.7	5.7+ - 6.9	6.9+ - 7.5				
19			To 2.1	2.1+ - 3.6	3.6+ - 4.8	4.8+ - 6.0	6.0+ - 7.5				
20											
21			1.8+ - 3.6	3.6+ - 5.7	5.7+ - 7.5						
22		To 2.1	2.1+ - 3.3	3.3+ - 5.1	5.1+ - 6.6	6.6+ - 7.5					
23			1.8+ - 3.6	3.6+ - 5.7	5.7+ - 7.5						
24		To 2.1	2.1+ - 3.3	3.3+ - 5.1	5.1+ - 6.6	6.6+ - 7.5					
25			3.3+ - 4.5	4.5+ - 7.5							
26			2.7+ - 4.2	4.2+ - 6.9	6.9+ - 7.5						
27			2.7+ - 4.2	4.2+ - 6.9	6.9+ - 7.5						
28			2.7+ - 3.9	3.9+ - 6.9	6.9+ - 7.5						
29			2.4+ - 3.9	3.9+ - 6.6	6.6+ - 7.5						
30			2.4+ - 3.9	3.9+ - 6.6	6.6+ - 7.5						
31			1.8+ - 3.6	3.6+ - 5.7	5.7+ - 6.9	6.9+ - 7.5					
32			1.8+ - 3.3	3.3+ - 5.4	5.4+ - 6.6	6.6+ - 7.5					
33			2.1+ - 3.6	3.6+ - 6.0	6.0+ - 7.5						
34			1.8+ - 3.3	3.3+ - 5.4	5.4+ - 6.9	6.9+ - 7.5					
35			2.1+ - 3.6	3.6+ - 6.0	6.0+ - 7.5						
36			1.8+ - 3.3	3.3+ - 5.4	5.4+ - 6.9	6.9+ - 7.5					
37			To 2.1	2.1+ - 3.9	3.9+ - 5.1	5.1+ - 6.3	6.3+ - 7.5				
38			To 1.8	1.8+ - 3.6	3.6+ - 4.8	4.8+ - 6.0	6.0+ - 7.2	7.2+ - 7.5			
39			To 1.8	1.8+ - 3.6	3.6+ - 4.5	4.5+ - 5.4	5.4+ - 6.9	6.9+ - 7.5			
40											
41				To 3.0	3.0+ - 3.6	3.6+ - 4.2	4.2+ - 5.4	5.4+ - 6.9	6.9+ - 7.5		
42				To 2.7	2.7+ - 3.3	3.3+ - 3.9	3.9+ - 5.4	5.4+ - 6.6	6.6+ - 7.5		
43											
44		4.2+ - 6.9	6.9+ - 7.5								
45			4.2+ - 6.6	6.6+ - 7.5							
46			4.2+ - 6.6	6.6+ - 7.5							
47			4.2+ - 6.6	6.6+ - 7.5							
48			4.2+ - 6.3	6.3+ - 7.5							
49			4.2+ - 6.0	6.0+ - 7.5							
50	To 3.9	3.9+ - 4.8	4.8+ - 6.0	6.0+ - 7.5							
51			4.2+ - 6.0	6.0+ - 7.5							
52			3.9+ - 4.2	4.2+ - 7.5							

COL. SIZE	50.8 x 3.2	63.5 x 3.2	76.2 x 3.2	88.9 x 4.8	101.6 x 4.8	101.6 x 6.4	114.3 x 6.4	127.0 x 6.4	139.7 x 6.4
FOOTING	0 x 600	0 x 675	0 x 750	450 x 750	450 x 750	450 x 750	450 x 750	450 x 825	450 x 900
Sign Identification Number	HEIGHT (m)								
53			3.9+ - 5.4	5.4+ - 7.5					
54			3.6+ - 5.1	5.1+ - 7.5					
55			3.6+ - 5.1	5.1+ - 7.5					
56	To 2.4	2.4+ - 3.9	3.9+ - 4.5	4.5+ - 7.5					
57			3.0+ - 4.5	4.5+ - 7.5					
58			3.3+ - 4.5	4.5+ - 7.5					
59			3.0+ - 4.5	4.5+ - 7.5					
60			3.0+ - 4.2	4.2+ - 7.2	7.2+ - 7.5				
61			2.4+ - 3.9	3.9+ - 6.6	6.6+ - 7.5				
62			2.4+ - 3.9	3.9+ - 6.6	6.6+ - 7.5				
63			2.7+ - 3.9	3.9+ - 6.9	6.9+ - 7.5				
64	To 1.8	1.8+ - 3.0	3.0+ - 4.2	4.2+ - 6.3	6.3+ - 7.5				
65			2.4+ - 3.9	3.9+ - 6.6	6.6+ - 7.5				
66		To 2.7	2.7+ - 3.9	3.9+ - 6.0	6.0+ - 7.5				
67			2.1+ - 3.9	3.9+ - 6.0	6.0+ - 7.5				
68			2.1+ - 3.6	3.6+ - 6.3	6.3+ - 7.5				
69			2.1+ - 3.9	3.9+ - 5.7	5.7+ - 7.5				
70			1.8+ - 3.3	3.3+ - 5.4	5.4+ - 6.9	6.9+ - 7.5			
71									
72		To 2.4	2.4+ - 3.6	3.6+ - 5.4	5.4+ - 6.9	6.9+ - 7.5			
73			1.8+ - 3.3	3.3+ - 5.4	5.4+ - 6.6	6.6+ - 7.5			
74									
75		To 1.8	1.8+ - 3.0	3.0+ - 4.8	4.8+ - 6.0	6.0+ - 7.2	7.2+ - 7.5		
76		To 1.8	1.8+ - 3.0	3.0+ - 4.8	4.8+ - 6.3	6.3+ - 7.5			
77			To 2.7	2.7+ - 4.5	4.5+ - 6.0	6.0+ - 7.5			
78		To 1.8	1.8+ - 3.0	3.0+ - 4.8	4.8+ - 6.0	6.0+ - 7.2	7.2+ - 7.5		
79									
80			To 2.1	2.1+ - 3.9	3.9+ - 4.8	4.8+ - 6.0	6.0+ - 7.5		
81			To 1.8	1.8+ - 3.6	3.6+ - 4.5	4.5+ - 5.7	5.7+ - 7.2	7.2+ - 7.5	
82									
83									
84									
85									
86				To 3.6	3.6+ - 3.9	3.9+ - 5.1	5.1+ - 6.3	6.3+ - 7.5	
87				To 3.0	3.0+ - 3.6	3.6+ - 4.5	4.5+ - 5.7	5.7+ - 7.2	7.2+ - 7.5
88									
89									
90									
91									

The Column Size And Footings Are in mm.

100 km/h WIND LOADING

COLUMN SIZE, COLUMN HEIGHT & COLUMN FOOTINGS

STATE OF FLORIDA DEPARTMENT OF TRANSPORTATION
STRUCTURES DESIGN

SINGLE COLUMN GROUND SIGNS

	Names	Dates
Designed By		
Drawn By		4-94
Checked By		
F.H.W.A. Approved:		

Approved By Gary L. Potter

Revision No.	Sheet No.	Index No.
94	2 of 2	11861

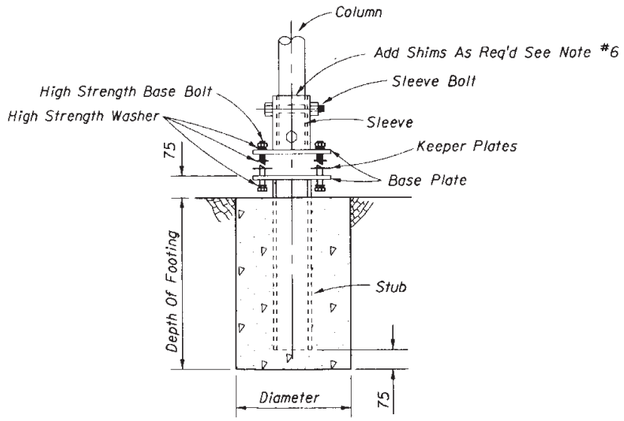

SLIP BASE AND FOOTING DETAIL

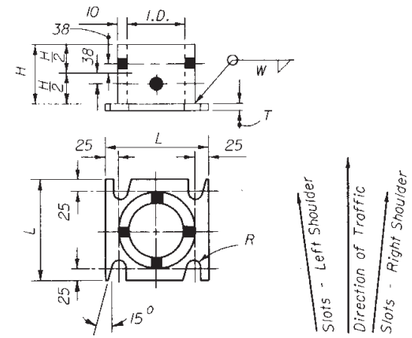

SLEEVE & BASE PLATE DETAILS

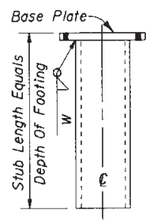

Stub Size Equals Min. Sleeve Size Or Longer

STUB DETAIL

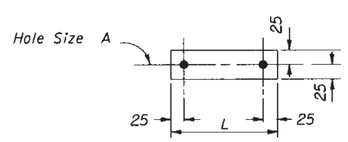

1.00 mm Thick Alum. Strip-2 Req'd Per Base

BOLT KEEPER DETAIL

SLIP BASE DATA									
Column Size	Sleeve I.D. (Max)	Sleeve Wall Thickness	Sleeve Height	Weld W	Base Plate LxLxT	Radius "R"	Base Bolt Size	Base Bolt Torque N•m	Hole Size A
88.9 x 4.8	90.4	10	150	16	200 X 200 X 19	9	16 Ø X 75	39	18
101.6 x 4.8	103.1	10	150	16	200 X 200 X 19	9	16 Ø X 75	39	18
101.6 x 6.4	103.1	10	150	16	200 X 200 X 19	9	16 Ø X 75	39	18
114.3 x 6.4	115.8	10	150	16	200 X 200 X 22	9	16 Ø X 85	39	18
127.0 x 6.4	128.5	10	175	16	200 X 200 X 22	9	16 Ø X 85	39	18
139.7 x 6.4	141.2	10	175	17.5	215 X 215 X 22	10	20 Ø X 85	62	22
152.4 x 6.4	153.9	10	200	17.5	225 X 225 X 25	10	20 Ø X 90	62	22
165.1 x 6.4	166.6	10	200	19	240 X 240 X 25	10	20 Ø X 90	62	22
177.8 x 6.4	179.3	10	225	19	250 X 250 X 25	10	20 Ø X 90	62	22
190.5 x 6.4	192.0	10	225	19	265 X 265 X 25	12	24 Ø X 95	72	27
203.2 x 6.4	204.7	10	250	19	275 X 275 X 25	12	24 Ø X 95	72	27

Note: Unless noted otherwise, all dimensions are in mm.

NOTES

1. Work this Index with Index Nos. 11860 and 11865.

2. To determine column (post) size and footing requirements use the required Sign Identification Number and sign Height (H), shown in the table on sheet 2 of 2. Design for Heights (H) lower than those listed in the table are included in Index No. 11865.

3. Single Column installations are not allowed for heights (H) exceeding the maximum height shown in the table, and for sign profiles (Sign Identification Numbers) without any design tabulated; in this event, the sign(s) will have to be supported by multiple columns (posts) featuring breakaway devices. See Index No. 9535.

4. Column (post) material shall be aluminum. The size is given as outside diameter and wall thickness. Columns (posts) larger than 75 mm x 3.2 mm are non-frangible and shall be installed with breakaway supports and will have concrete footings and slip bases.

5. Breakaway Supports : The column support shall be set in a concrete footing, sized as shown in the table. The first dimension indicates the diameter and the second dimension the depth into the ground. In all cases the ground is to be considered as undisturbed earth, road material, or properly compacted fill.

   Frangible supports: Frangible Supports do not require footings. The column (post) shall be driven into the ground to the depth indicated.

6. SLIP BASE NOTES :
   a) The inside Diameter (I.D.) of the sleeve shall be no more than 1.5 mm larger than the Outside Diameter (O.D.) of the Column.
   b) The sleeve bolts shall be 13 mm Ø with locknuts. The bolts shall be galvanized steel (ASTM A-307) or Aluminum Association Alloy 2024-T4 or 6061-T6 (ASTM B-211M).
   c) The base bolts, nuts and washers shall be high strength ASTM A-325 M and shall have an electroplated zinc coating SC3, Type II applied in accordance with ASTM B633.
   d) An alternate cast base of aluminum alloy 356 and T6 temper in lieu of the fabrication base may be submitted for approval by the Engineer. If a cast base is used the stub will be the same as the column and will be bolted to the casting.
   e) Assemble the slip base connection in the following manner :
      Connect column to sleeve using two (2) 13 mm Ø machine bolts.
      Assemble top base plate to stub base plate using four (4) high strength bolts with three (3) hardened washers per bolt. One (1) washer per bolt and two (2) bolt keeper plates go between the base plate.
      Use shim stock as required to plumb the column.
      Tighten all bolts the maximum possible with a 300 to 375 mm wrench to bed the washers and shims and to clear the bolt threads. Loosen each bolt (1) turn and retighten to the prescribed torque (see table). Bolts shall be tightened with properly calibrated wrenches under the supervision of the project engineer.
      Burr threads at junction with nut using a center punch to prevent nut loosening.
   f) Use galvanized steel shims to obtain a tight fit between the column face and the sleeve. Place shims in all quadrants between the 13 mm Ø sleeve bolts. The shims length shall be 25 mm shorter than the height of the sleeve.

115 km/h WIND LOADING

COLUMN SIZE, COLUMN HEIGHT & COLUMN FOOTINGS

STATE OF FLORIDA DEPARTMENT OF TRANSPORTATION
STRUCTURES DESIGN

SINGLE COLUMN GROUND SIGNS

	Names	Dates
Designed By		
Drawn By		4-94
Checked By		

F.H.W.A. Approved:

Approved By Jerry J Potter

Revision No.	Sheet No.	Index No.
94	1 of 2	11862

COL. SIZE	50.8 x 3.2	63.5 x 3.2	76.2 x 3.2	88.9 x 4.8	101.6 x 4.8	101.6 x 6.4	114.3 x 6.4	127.0 x 6.4	139.7 x 6.4	152.4 x 6.4	165.1 x 6.4
FOOTING	0 x 600	0 x 675	0 x 750	450 x 750	450 x 750	450 x 750	450 x 750	450 x 825	450 x 900	450 x 975	600 x 900
Sign Identification Number	HEIGHT (m)										
1			4.2+ - 5.7	5.7+ - 7.5							
2			4.2+ - 5.4	5.4+ - 7.5							
3			3.9+ - 4.8	4.8+ - 7.5							
4		To 2.4	2.4+ - 3.3	3.3+ - 5.4	5.4+ - 6.6	6.6+ - 7.5					
5											
6			2.7+ - 3.6	3.6+ - 5.4	5.4+ - 6.6	6.6+ - 7.5					
7				2.1+ - 3.9	3.9+ - 4.5	4.5+ - 5.7	5.7+ - 7.5				
8		4.2+ - 4.8	4.8+ - 6.0	6.0+ - 7.5							
9			4.2+ - 5.4	5.4+ - 7.5							
10			3.6+ - 3.9	3.9+ - 6.6	6.6+ - 7.5						
11			2.7+ - 3.6	3.6+ - 5.4	5.4+ - 6.6	6.6+ - 7.5					
12			To 1.8	1.8+ - 3.9	3.9+ - 4.2	4.2+ - 5.1	5.1+ - 6.3	6.3+ - 7.5			
13			3.6+ - 3.9	3.9+ - 6.6	6.6+ - 7.5						
14			3.3+ - 3.9	3.9+ - 6.3	6.3+ - 7.5						
15			3.0+ - 3.9	3.9+ - 5.7	5.7+ - 6.9	6.9+ - 7.5					
16			2.7+ - 3.6	3.6+ - 5.4	5.4+ - 6.6	6.6+ - 7.5					
17			To 2.1	2.1+ - 3.6	3.6+ - 4.8	4.8+ - 6.0	6.0+ - 7.2	7.2+ - 7.5			
18			To 1.8	1.8+ - 3.6	3.6+ - 4.2	4.2+ - 5.1	5.1+ - 6.6	6.6+ - 7.5			
19				To 3.3	3.3+ - 3.6	3.6+ - 4.5	4.5+ - 5.7	5.7+ - 6.9	6.9+ - 7.5		
20											
21			1.8+ - 2.7	2.7+ - 4.2	4.2+ - 5.4	5.4+ - 6.6	6.6+ - 7.5				
22			To 2.1	2.1+ - 3.9	3.9+ - 5.1	5.1+ - 6.3	6.3+ - 7.5				
23			1.8+ - 2.7	2.7+ - 4.2	4.2+ - 5.4	5.4+ - 6.6	6.6+ - 7.5				
24			To 2.1	2.1+ - 3.9	3.9+ - 5.1	5.1+ - 6.3	6.3+ - 7.5				
25			3.3+ - 3.9	3.9+ - 6.0	6.0+ - 7.5						
26			2.7+ - 3.6	3.6+ - 5.4	5.4+ - 6.6	6.6+ - 7.5					
27			2.7+ - 3.6	3.6+ - 5.4	5.4+ - 6.6	6.6+ - 7.5					
28			2.7+ - 3.6	3.6+ - 5.4	5.4+ - 6.6	6.6+ - 7.5					
29			2.4+ - 3.3	3.3+ - 5.1	5.1+ - 6.3	6.3+ - 7.5					
30			2.4+ - 3.3	3.3+ - 5.1	5.1+ - 6.3	6.3+ - 7.5					
31			1.8+ - 2.4	2.4+ - 4.2	4.2+ - 5.4	5.4+ - 6.6	6.6+ - 7.5				
32			1.8+ - 2.4	2.4+ - 3.9	3.9+ - 5.1	5.1+ - 6.3	6.3+ - 7.5				
33			2.1+ - 2.7	2.7+ - 4.5	4.5+ - 5.7	5.7+ - 6.9	6.9+ - 7.5				
34			1.8+ - 2.4	2.4+ - 4.2	4.2+ - 5.1	5.1+ - 6.6	6.6+ - 7.5				
35			2.1+ - 2.7	2.7+ - 4.5	4.5+ - 5.7	5.7+ - 6.9	6.9+ - 7.5				
36			1.8+ - 2.4	2.4+ - 4.2	4.2+ - 5.1	5.1+ - 6.6	6.6+ - 7.5				
37				To 3.3	3.3+ - 3.6	3.6+ - 4.8	4.8+ - 6.0	6.0+ - 7.2	7.2+ - 7.5		
38				To 3.0	3.0+ - 3.6	3.6+ - 4.2	4.2+ - 5.4	5.4+ - 6.6	6.6+ - 7.5		
39				To 2.7	2.7+ - 3.6	3.6+ - 3.9	3.9+ - 5.1	5.1+ - 6.3	6.3+ - 7.5		
40											
41				To 1.8	1.8+ - 2.7	2.7+ - 3.6	3.6+ - 3.9	3.9+ - 5.1	5.1+ - 6.0	6.0+ - 7.2	7.2+ - 7.5
42				To 1.8	1.8+ - 2.7	2.7+ - 3.3	3.3+ - 3.6	3.6+ - 4.8	4.8+ - 6.0	6.0+ - 7.2	7.2+ - 7.5
43											
44		4.2+ - 5.7	5.7+ - 6.9	6.9+ - 7.5							
45			4.2+ - 5.4	5.4+ - 7.5							
46			4.2+ - 5.4	5.4+ - 7.5							
47			4.2+ - 5.4	5.4+ - 7.5							
48			4.2+ - 5.1	5.1+ - 7.5							
49			4.2+ - 4.8	4.8+ - 7.5							
50	To 2.7	2.7+ - 3.9	3.9+ - 4.8	4.8+ - 7.5							
51			4.2+ - 4.8	4.8+ - 7.5							
52			3.9+ - 4.5	4.5+ - 7.2	7.2+ - 7.5						

COL. SIZE	50.8 x 3.2	63.5 x 3.2	76.2 x 3.2	88.9 x 4.8	101.6 x 4.8	101.6 x 6.4	114.3 x 6.4	127.0 x 6.4	139.7 x 6.4	152.4 x 6.4
FOOTING	0 x 600	0 x 675	0 x 750	450 x 750	450 x 750	450 x 750	450 x 750	450 x 825	450 x 900	450 x 975
Sign Identification Number	HEIGHT (m)									
53			3.9+ - 4.2	4.2+ - 6.9	6.9+ - 7.5					
54			3.6+ - 4.2	4.2+ - 6.6	6.6+ - 7.5					
55			3.6+ - 3.9	3.9+ - 6.6	6.6+ - 7.5					
56	To 1.8	1.8+ - 3.0	3.0+ - 3.9	3.9+ - 6.0	6.0+ - 7.5					
57			3.0+ - 3.9	3.9+ - 6.0	6.0+ - 7.5					
58			3.3+ - 3.9	3.9+ - 6.0	6.0+ - 7.5					
59			3.0+ - 3.9	3.9+ - 6.0	6.0+ - 7.5					
60			3.0+ - 3.9	3.9+ - 5.7	5.7+ - 6.9	6.9+ - 7.5				
61			2.4+ - 3.3	3.3+ - 5.1	5.1+ - 6.3	6.3+ - 7.5				
62			2.4+ - 3.3	3.3+ - 5.1	5.1+ - 6.3	6.3+ - 7.5				
63			2.7+ - 3.6	3.6+ - 5.4	5.4+ - 6.6	6.6+ - 7.5				
64		To 2.1	2.1+ - 3.3	3.3+ - 4.8	4.8+ - 6.0	6.0+ - 7.5				
65			2.4+ - 3.3	3.3+ - 5.1	5.1+ - 6.3	6.3+ - 7.5				
66		To 1.8	1.8+ - 3.0	3.0+ - 4.5	4.5+ - 5.7	5.7+ - 6.9	6.9+ - 7.5			
67			2.1+ - 3.0	3.0+ - 4.5	4.5+ - 5.7	5.7+ - 7.2	7.2+ - 7.5			
68			2.1+ - 3.0	3.0+ - 4.8	4.8+ - 6.0	6.0+ - 7.2	7.2+ - 7.5			
69			2.1+ - 2.7	2.7+ - 4.5	4.5+ - 5.7	5.7+ - 6.9	6.9+ - 7.5			
70			1.8+ - 2.4	2.4+ - 4.2	4.2+ - 5.1	5.1+ - 6.6	6.6+ - 7.5			
71										
72			To 2.7	2.7+ - 4.2	4.2+ - 5.4	5.4+ - 6.3	6.3+ - 7.5			
73			1.8+ - 2.4	2.4+ - 3.9	3.9+ - 5.1	5.1+ - 6.3	6.3+ - 7.5			
74										
75			To 2.1	2.1+ - 3.9	3.9+ - 4.5	4.5+ - 5.7	5.7+ - 6.9	6.9+ - 7.5		
76			To 2.1	2.1+ - 3.9	3.9+ - 4.5	4.5+ - 5.7	5.7+ - 7.2	7.2+ - 7.5		
77			To 1.8	1.8+ - 3.6	3.6+ - 4.5	4.5+ - 5.7	5.7+ - 6.9	6.9+ - 7.5		
78			To 2.1	2.1+ - 3.9	3.9+ - 4.5	4.5+ - 5.7	5.7+ - 6.9	6.9+ - 7.5		
79										
80				To 3.3	3.3+ - 3.9	3.9+ - 4.5	4.5+ - 5.7	5.7+ - 6.9	6.9+ - 7.5	
81				To 3.0	3.0+ - 3.6	3.6+ - 4.2	4.2+ - 5.4	5.4+ - 6.6	6.6+ - 7.5	
82										
83										
84										
85										
86				To 2.4	2.4+ - 3.3	3.3+ - 3.6	3.6+ - 4.8	4.8+ - 5.7	5.7+ - 6.9	6.9+ - 7.5
87				To 2.1	2.1+ - 3.0	3.0+ - 3.6	3.6+ - 4.2	4.2+ - 5.4	5.4+ - 6.3	6.3+ - 7.5
88										
89										
90										
91										

The Column Size And Footings Are In mm.

115 K/mh WIND LOADING

COLUMN SIZE, COLUMN HEIGHT & COLUMN FOOTINGS

STATE OF FLORIDA DEPARTMENT OF TRANSPORTATION
STRUCTURES DESIGN

SINGLE COLUMN GROUND SIGNS

	Names	Dates
Designed By		
Drawn By		4-94
Checked By		

F.H.W.A. Approved:

Approved By Jerry J. Potter

Revision No.	Sheet No.	Index No.
94	2 of 2	11862

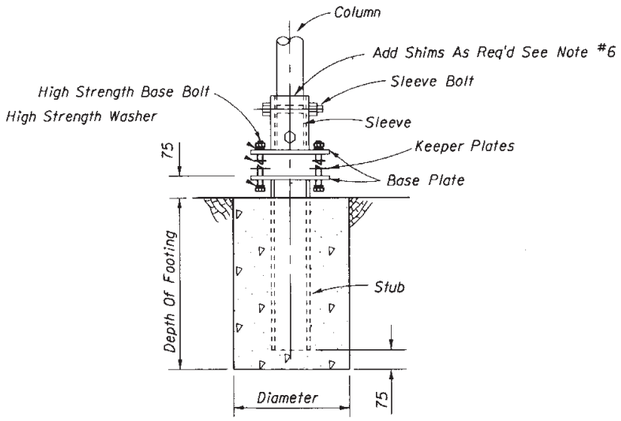

SLIP BASE AND FOOTING DETAIL

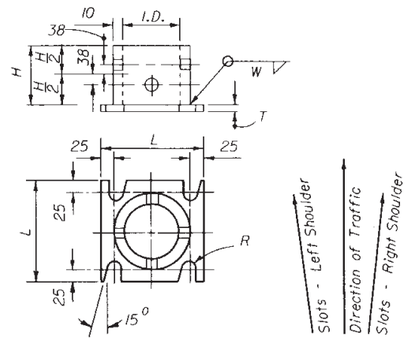

SLEEVE & BASE PLATE DETAILS

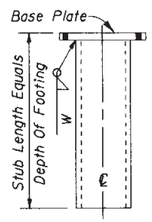

Stub Size Equals Min. Sleeve Size Or Longer

STUB DETAIL

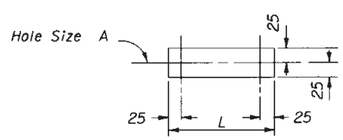

1.00 mm Thick Alum. Strip-2 Req'd Per Base

BOLT KEEPER DETAIL

SLIP BASE DATA									
Column Size	Sleeve I.D. (Max)	Sleeve Wall Thickness	Sleeve Height	Weld W	Base Plate LxLxT	Radius "R"	Base Bolt Size	Base Bolt Torque N•m	Hole Size A
88.9 x 4.8	90.4	10	150	16	200 X 200 X 19	9	16 Ø X 75	39	18
101.6 x 4.8	103.1	10	150	16	200 X 200 X 19	9	16 Ø X 75	39	18
101.6 x 6.4	103.1	10	150	16	200 X 200 X 19	9	16 Ø X 75	39	18
114.3 x 6.4	115.8	10	150	16	200 X 200 X 22	9	16 Ø X 85	39	18
127.0 x 6.4	128.5	10	175	16	200 X 200 X 22	9	16 Ø X 85	39	18
139.7 x 6.4	141.2	10	175	17.5	215 X 215 X 22	10	20 Ø X 85	62	22
152.4 x 6.4	153.9	10	200	17.5	225 X 225 X 25	10	20 Ø X 90	62	22
165.1 x 6.4	166.6	10	200	19	240 X 240 X 25	10	20 Ø X 90	62	22
177.8 x 6.4	179.3	10	225	19	250 X 250 X 25	10	20 Ø X 90	62	22
190.5 x 6.4	192.0	10	225	19	265 X 265 X 25	12	24 Ø X 95	72	27
203.2 x 6.4	204.7	10	250	19	275 X 275 X 25	12	24 Ø X 95	72	27

Note: Unless noted otherwise, all dimensions are in mm.

NOTES

1. Work this Index with Index Nos. 11860 and 11865.

2. To determine column (post) size and footing requirements use the required Sign Identification Number and sign Height (H), shown in the table on sheet 2 of 2. Design for Heights (H) lower than those listed in the table are included in Index No. 11865.

3. Single Column installations are not allowed for heights (H) exceeding the maximum height shown in the table, and for sign profiles (Sign Identification Numbers) without any design tabulated; in this event, the sign(s) will have to be supported by multiple columns (posts) featuring breakaway devices. See Index No. 9535.

4. Column (post) material shall be aluminum. The size is given as outside diameter and wall thickness. Columns (posts) larger than 75 mm x 3.2 mm are non-frangible and shall be installed with breakaway supports and will have concrete footings and slip bases.

5. Breakaway Supports : The column support shall be set in a concrete footing, sized as shown in the table. The first dimension indicates the diameter and the second dimension the depth into the ground. In all cases the ground is to be considered as undisturbed earth, road material, or properly compacted fill.

   Frangible supports: Frangible Supports do not require footings. The column (post) shall be driven into the ground to the depth indicated.

6. SLIP BASE NOTES :
   a) The inside Diameter (I.D.) of the sleeve shall be no more than 1.5 mm larger than the Outside Diameter (O.D.) of the Column.
   b) The sleeve bolts shall be 13 mm Ø with locknuts. The bolts shall be galvanized steel (ASTM A-307) or Aluminum Association Alloy 2024-T4 or 6061-T6 (ASTM B-211M).
   c) The base bolts, nuts and washers shall be high strength ASTM A-325 M and shall have an electroplated zinc coating SC3, Type II applied in accordance with ASTM B633.
   d) An alternate cast base of aluminum alloy 356 and T6 temper in lieu of the fabrication base may be submitted for approval by the Engineer. If a cast base is used the stub will be the same as the column and will be bolted to the casting.
   e) Assemble the slip base connection in the following manner :
      Connect column to sleeve using two (2) 13 mm Ø machine bolts.
      Assemble top base plate to stub base plate using four (4) high strength bolts with three (3) hardened washers per bolt. One (1) washer per bolt and two (2) bolt keeper plates go between the base plate.
      Use shim stock as required to plumb the column.
      Tighten all bolts the maximum possible with a 300 to 375 mm wrench to bed the washers and shims and to clear the bolt threads. Loosen each bolt (1) turn and retighten to the prescribed torque (see table). Bolts shall be tightened with properly calibrated wrenches under the supervision of the project engineer.
      Burr threads at junction with nut using a center punch to prevent nut loosening.
   f) Use galvanized steel shims to obtain a tight fit between the column face and the sleeve. Place shims in all quadrants between the 13 mm Ø sleeve bolts. The shims length shall be 25 mm shorter than the height of the sleeve.

130 km/h WIND LOADING

COLUMN SIZE, COLUMN HEIGHT & COLUMN FOOTINGS

STATE OF FLORIDA DEPARTMENT OF TRANSPORTATION
STRUCTURES DESIGN

SINGLE COLUMN GROUND SIGNS

	Names	Dates
Designed By		
Drawn By		4-94
Checked By		

Approved By Jerry G. Potter

F.H.W.A. Approved:

Revision No.	Sheet No.	Index No.
94	1 of 2	11863

COL. SIZE	50.8 x 3.2	63.5 x 3.2	76.2 x 3.2	88.9 x 4.8	101.6 x 4.8	101.6 x 6.4	114.3 x 6.4	127.0 x 6.4	139.7 x 6.4	152.4 x 6.4	165.1 x 6.4	177.8 x 6.4
FOOTING	0 x 600	0 x 675	0 x 750	450 x 750	450 x 750	450 x 750	450 x 750	450 x 825	450 x 900	450 x 975	600 x 900	600 x 1000
Sign Identification Number	HEIGHT (METERS)											
1			4.2+- 4.8	4.8+- 7.5								
2			4.2+- 4.5	4.5+- 6.9	6.9+- 7.5							
3				3.9+- 6.3	6.3+- 7.5							
4			To 2.7	2.7+- 4.2	4.2+- 5.4	5.4+- 6.3	6.3+- 7.5					
5												
6				2.7+- 4.2	4.2+- 5.1	5.1+- 6.3	6.3+- 7.5					
7				To 3.3	3.3+- 3.9	3.9+- 4.5	4.5+- 5.7	5.7+- 6.9	6.9+- 7.5			
8			4.2+- 5.1	5.1+- 7.5								
9			4.2+- 4.5	4.5+- 6.9	6.9+- 7.5							
10			3.6+- 4.2	4.2+- 5.4	5.4+- 6.6	6.6+- 7.5						
11				2.7+- 4.2	4.2+- 5.1	5.1+- 6.3	6.3 - 7.5					
12				To 2.7	2.7+- 3.9	3.9+- 4.2	4.2+- 5.1	5.1+- 6.0	6.0+- 7.2	7.2+- 7.5		
13				3.6+- 5.4	5.4+- 6.3	6.3+- 7.5						
14				3.3+- 5.1	5.1+- 6.0	6.0+- 7.2	7.2+- 7.5					
15				3.0+- 4.5	4.5+- 5.7	5.7+- 6.9	6.9+- 7.5					
16				2.7+- 4.5	4.5+- 5.4	5.4+- 6.6	6.6+- 7.5					
17				To 3.3	3.3+- 3.6	3.6+- 4.8	4.8+- 5.7	5.7+- 6.9	6.9+- 7.5			
18				To 2.4	2.4+- 3.3	3.3+- 3.6	3.6+- 4.5	4.5+- 5.7	5.7+- 6.9	6.9+- 7.5		
19				To 2.4	2.4+- 3.3	3.3+- 3.6	3.6+- 4.5	4.5+- 5.7	5.7+- 6.9	6.9+- 7.5		
20												
21				1.8+- 3.6	3.6+- 4.2	4.2+- 5.4	5.4+- 6.6	6.6+- 7.5				
22				To 3.6	3.6+- 3.9	3.9+- 4.8	4.8+- 6.0	6.0+- 7.2	7.2+- 7.5			
23				1.8+- 3.6	3.6+- 4.2	4.2+- 5.4	5.4+- 6.6	6.6+- 7.5				
24				To 3.6	3.6+- 3.9	3.9+- 4.8	4.8+- 6.0	6.0+- 7.2	7.2+- 7.5			
25				3.3+- 4.8	4.8+- 6.0	6.0+- 7.2	7.2+- 7.5					
26				2.7+- 4.5	4.5+- 5.4	5.4+- 6.6	6.6+- 7.5					
27				2.7+- 4.5	4.5+- 5.4	5.4+- 6.6	6.6+- 7.5					
28				2.7+- 4.2	4.2+- 5.1	5.1+- 6.3	6.3+- 7.5					
29				2.4+- 4.2	4.2+- 5.1	5.1+- 6.3	6.3+- 7.5					
30				2.4+- 3.9	3.9+- 5.1	5.1+- 6.0	6.0+- 7.2	7.2+- 7.5				
31				1.8+- 3.9	3.9+- 4.2	4.2+- 5.1	5.1+- 6.3	6.3+- 7.5				
32				1.8+- 3.6	3.6+- 3.9	3.9+- 5.1	5.1+- 6.0	6.0+- 7.2	7.2+- 7.5			
33				2.1+- 3.6	3.6+- 4.5	4.5+- 5.7	5.7+- 6.6	6.6+- 7.5				
34				1.8+- 3.6	3.6+- 4.2	4.2+- 5.1	5.1+- 6.3	6.3+- 7.5				
35				2.1+- 3.6	3.6+- 4.5	4.5+- 5.7	5.7+- 6.6	6.6+- 7.5				
36				1.8+- 3.6	3.6+- 4.2	4.2+- 5.1	5.1+- 6.3	6.3+- 7.5				
37				To 2.4	2.4+- 3.3	3.3+- 3.6	3.6+- 4.5	4.5+- 5.7	5.7+- 6.9	6.9+- 7.5		
38				To 2.1	2.1+- 3.0	3.0+- 3.9	3.9+- 4.8	4.8+- 6.0	6.0+- 7.2	7.2+- 7.5		
39				To 2.1	2.1+- 3.0	3.0+- 3.6	3.6+- 3.9	3.9+- 4.8	4.8+- 6.0	6.0+- 7.2	7.2+- 7.5	
40												
41					To 2.1	2.1+- 2.7	2.7+- 3.6	3.6+- 3.9	3.9+- 4.8	4.8+- 5.7	5.7+- 6.9	6.9+- 7.5
42					To 1.8	1.8+- 2.4	2.4+- 3.3	3.3+- 3.6	3.6+- 4.5	4.5+- 5.4	5.4+- 6.6	6.6+- 7.5
43												
44		4.2+- 4.8	4.8+- 5.7	5.7+- 7.5								
45			4.2+- 4.5	4.5+- 6.6	6.6+- 7.5							
46			4.2+- 4.5	4.5+- 6.6	6.6+- 7.5							
47			4.2+- 4.5	4.5+- 6.9	6.9+- 7.5							
48				4.2+- 6.6	6.6+- 7.5							
49				4.2+- 6.3	6.3+- 7.5							
50	To 2.1	2.1+- 3.3	3.3+- 3.9	3.9+- 6.3	6.3+- 7.5							
51				4.2+- 6.0	6.0+- 7.5							
52				3.9+- 6.0	6.0+- 7.5							

COL. SIZE	63.5 x 3.2	76.2 x 3.2	88.9 x 4.8	101.6 x 4.8	101.6 x 6.4	114.3 x 6.4	127.0 x 6.4	139.7 x 6.4	152.4 x 6.4	165.1 x 6.4	177.8 x 6.4
FOOTING	0 x 675	0 x 750	450 x 750	450 x 750	450 x 750	450 x 750	450 x 825	450 x 900	450 x 975	600 x 900	600 x 1000
Sign Identification Number	HEIGHT (METERS)										
53			3.9+ 5.7	5.7+- 6.6	6.6+- 7.5						
54			3.6+- 5.4	5.4+- 6.3	6.3+- 7.5						
55			3.6+ 5.4	5.4+- 6.6	6.6+- 7.5						
56	To 2.1	2.1+ 3.3	3.3+- 4.8	4.8+- 6.0	6.0+- 7.2	7.2+ 7.5					
57			3.0+- 4.8	4.8+- 5.7	5.7+- 6.9	6.9+- 7.5					
58			3.3+- 4.8	4.8+- 6.0	6.0+- 7.2	7.2+- 7.5					
59			3.0+- 4.8	4.8+- 6.0	6.0+- 6.9	6.9+ 7.5					
60			3.0+ 4.5	4.5+- 5.7	5.7+- 6.9	6.9+- 7.5					
61			2.4+ 3.9	3.9+- 5.1	5.1+- 6.3	6.3+- 7.2	7.2+- 7.5				
62			2.4+- 3.9	3.9+- 5.1	5.1+- 6.3	6.3+- 7.2	7.2+- 7.5				
63			2.7+- 4.2	4.2+- 5.1	5.1+- 6.3	6.3+- 7.5					
64		TO 2.4	2.4+- 4.2	4.2+- 4.8	4.8+- 6.0	6.0+- 7.2	7.2+- 7.5				
65			2.4+ 3.9	3.9+- 4.8	4.8+ 6.0	6.0+- 7.2	7.2+- 7.5				
66		To 2.1	2.1+- 3.9	3.9+- 4.5	4.5+- 5.7	5.7+- 6.9	6.9+- 7.5				
67			2.1+- 3.9	3.9+- 4.5	4.5+- 5.7	5.7+- 6.9	6.9+- 7.5				
68			2.1+- 3.6	3.6+- 4.8	4.8+- 5.7	5.7+- 6.9	6.9+- 7.5				
69			2.1+- 3.6	3.6+- 4.5	4.5+- 5.4	5.4+- 6.6	6.6+- 7.5				
70			1.8+- 3.6	3.6+- 4.2	4.2+- 5.1	5.1+- 6.3	6.3+- 7.5				
71											
72		To 1.8	1.8+- 3.9	3.9+- 4.2	4.2+- 5.1	5.1+- 6.3	6.3+- 7.5				
73			1.8+- 3.6	3.6+- 3.9	3.9+- 5.1	5.1+- 6.0	6.0+- 7.2	7.2+- 7.5			
74											
75			To 3.3	3.3+- 3.9	3.9+- 4.5	4.5+- 5.4	5.4+- 6.6	6.6+- 7.5			
76			To 3.3	3.3+- 3.9	3.9+- 4.5	4.5+- 5.7	5.7+- 6.9	6.9+- 7.5			
77			To 3.0	3.0+- 3.6	3.6+- 4.2	4.2+- 5.4	5.4+- 6.6	6.6+- 7.5			
78			To 3.3	3.3+- 3.9	3.9+- 4.5	4.5+- 5.4	5.4+- 6.6	6.6+- 7.5			
79											
80			To 2.4	2.4+- 3.3	3.3+- 3.9	3.9+- 4.5	4.5+- 5.4	5.4+- 6.6	6.6+- 7.5		
81			To 2.1	2.1+- 3.0	3.0+- 3.6	3.6+- 4.2	4.2+- 5.1	5.1+- 6.3	6.3+- 7.5		
82											
83											
84											
85											
86			To 1.8	1.8+- 2.4	2.4+- 3.3	3.3+- 3.6	3.6+- 4.5	4.5+- 5.4	5.4+- 6.6	6.6+- 7.5	
87				TO 2.1	2.1+- 3.0	3.0+- 3.6	3.6+- 3.9	3.9+- 5.1	5.1+- 6.0	6.0+- 7.2	7.2+- 7.5
88											
89											
90											
91											

130 km/h WIND LOADING

COLUMN SIZE , COLUMN HEIGHT & COLUMN FOOTINGS

STATE OF FLORIDA DEPARTMENT OF TRANSPORTATION
ROAD DESIGN

SINGLE COLUMN GROUND SIGNS

	Names	Dates
Designed By		
Drawn By		4-94
Checked By		

Approved By

F.H.W.A. Approved:

Revision No. 94 | Sheet No. 2 of 2 | Index No. 11863

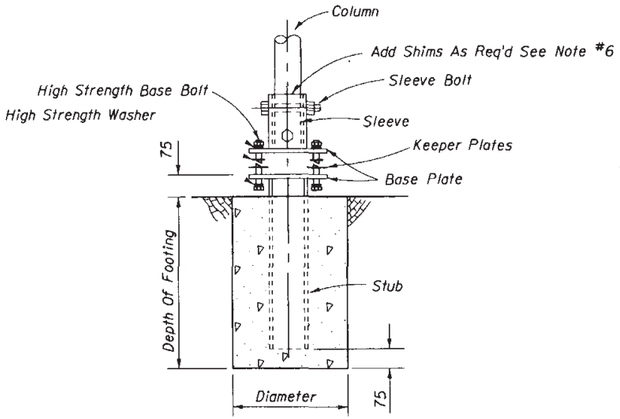

SLIP BASE AND FOOTING DETAIL

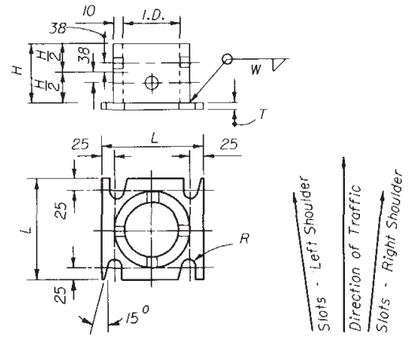

SLEEVE & BASE PLATE DETAILS

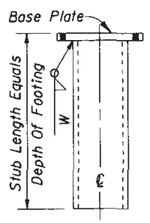

Stub Size Equals Min. Sleeve Size Or Longer

STUB DETAIL

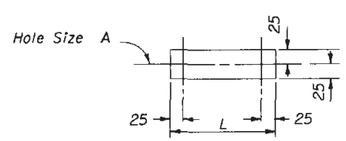

1.00 mm Thick Alum. Strip-2 Req'd Per Base

BOLT KEEPER DETAIL

SLIP BASE DATA									
Column Size	Sleeve I.D. (Max)	Sleeve Wall Thickness	Sleeve Height	Weld W	Base Plate LxLxT	Radius "R"	Base Bolt Size	Base Bolt Torque N•m	Hole Size A
88.9 x 4.8	90.4	10	150	16	200 X 200 X 19	9	16 Ø X 75	39	18
101.6 x 4.8	103.1	10	150	16	200 X 200 X 19	9	16 Ø X 75	39	18
101.6 x 6.4	103.1	10	150	16	200 X 200 X 19	9	16 Ø X 75	39	18
114.3 x 6.4	115.8	10	150	16	200 X 200 X 22	9	16 Ø X 85	39	18
127.0 x 6.4	128.5	10	175	16	200 X 200 X 22	9	16 Ø X 85	39	18
139.7 x 6.4	141.2	10	175	17.5	215 X 215 X 22	10	20 Ø X 85	62	22
152.4 x 6.4	153.9	10	200	17.5	225 X 225 X 25	10	20 Ø X 90	62	22
165.1 x 6.4	166.6	10	200	19	240 X 240 X 25	10	20 Ø X 90	62	22
177.8 x 6.4	179.3	10	225	19	250 X 250 X 25	10	20 Ø X 90	62	22
190.5 x 6.4	192.0	10	225	19	265 X 265 X 25	12	24 Ø X 95	72	27
203.2 x 6.4	204.7	10	250	19	275 X 275 X 25	12	24 Ø X 95	72	27

Note: Unless noted otherwise, all dimensions are in mm.

NOTES

1. Work this Index with Index Nos. 11860 and 11865.

2. To determine column (post) size and footing requirements use the required Sign Identification Number and sign Height (H), shown in the table on sheet 2 of 2. Design for Heights (H) lower than those listed in the table are included in Index No. 11865.

3. Single Column installations are not allowed for heights (H) exceeding the maximum height shown in the table, and for sign profiles (Sign Identification Numbers) without any design tabulated; in this event, the sign(s) will have to be supported by multiple columns (posts) featuring breakaway devices. See Index No. 9535.

4. Column (post) material shall be aluminum. The size is given as outside diameter and wall thickness. Columns (posts) larger than 75 mm x 3.2 mm are non-frangible and shall be installed with breakaway supports and will have concrete footings and slip bases.

5. Breakaway Supports : The column support shall be set in a concrete footing, sized as shown in the table. The first dimension indicates the diameter and the second dimension the depth into the ground. In all cases the ground is to be considered as undisturbed earth, road material, or properly compacted fill.

   Frangible supports: Frangible Supports do not require footings. The column (post) shall be driven into the ground to the depth indicated.

6. SLIP BASE NOTES :
   a) The inside Diameter (I.D.) of the sleeve shall be no more than 1.5 mm larger than the Outside Diameter (O.D.) of the Column.
   b) The sleeve bolts shall be 13 mm Ø with locknuts. The bolts shall be galvanized steel (ASTM A-307) or Aluminum Association Alloy 2024-T4 or 6061-T6 (ASTM B-211M).
   c) The base bolts, nuts and washers shall be high strength ASTM A-325 M and shall have an electroplated zinc coating SC3, Type II applied in accordance with ASTM B633.
   d) An alternate cast base of aluminum alloy 356 and T6 temper in lieu of the fabrication base may be submitted for approval by the Engineer. If a cast base is used the stub will be the same as the column and will be bolted to the casting.
   e) Assemble the slip base connection in the following manner :
      Connect column to sleeve using two (2) 13 mm Ø machine bolts.
      Assemble top base plate to stub base plate using four (4) high strength bolts with three (3) hardened washers per bolt. One (1) washer per bolt and two (2) bolt keeper plates go between the base plate.
      Use shim stock as required to plumb the column.
      Tighten all bolts the maximum possible with a 300 to 375 mm wrench to bed the washers and shims and to clear the bolt threads. Loosen each bolt (1) turn and retighten to the prescribed torque (see table). Bolts shall be tightened with properly calibrated wrenches under the supervision of the project engineer.
      Burr threads at junction with nut using a center punch to prevent nut loosening.
   f) Use galvanized steel shims to obtain a tight fit between the column face and the sleeve. Place shims in all quadrants between the 13 mm Ø sleeve bolts. The shims length shall be 25 mm shorter than the height of the sleeve.

COLUMN SIZE, COLUMN HEIGHT & COLUMN FOOTINGS

STATE OF FLORIDA DEPARTMENT OF TRANSPORTATION
STRUCTURES DESIGN

SINGLE COLUMN GROUND SIGNS

145 km/h WIND LOADING

	Names	Dates
Designed By		
Drawn By		4-94
Checked By		
F.H.W.A. Approved:		

Approved By Jerry L. Pettes

Revision No.	Sheet No.	Index No.
94	1 of 2	11864

COL. SIZE	50.8 x 3.2	76.2 x 3.2	88.9 x 4.8	101.6 x 4.8	101.6 x 6.4	114.3 x 6.4	127.0 x 6.4	139.7 x 6.4	152.4 x 6.4	165.1 x 6.4	177.8 x 6.4	190.5 x 6.4	203.2 x 6.4
FOOTING	0 x 600	0 x 750	450 x 750	450 x 750	450 x 750	450 x 750	450 x 825	450 x 900	450 x 975	600 x 900	600 x 1000	600 x 1050	600 x 1200
Sign Identification Number	HEIGHT (m)												
1			4.2+ - 6.3	6.3+ - 7.5									
2			4.2+ - 5.7	5.7+ 6.6	6.6+ 7.5								
3			3.9+ - 5.4	5.4+ - 6.3	6.3+ 7.5								
4		To 1.8	1.8+ - 3.6	3.6+ - 4.2	4.2+ 5.4	5.4+ - 6.3	6.3+ - 7.5						
5													
6			2.7+ - 3.9	3.9+ - 4.2	4.2+ 5.4	5.4+ - 6.3	6.3+ 7.5						
7			To 2.4	2.4+ - 3.3	3.3+ - 3.9	3.9+ - 4.5	4.5+ - 5.7	5.7+ - 6.9	6.9+ - 7.5				
8		4.2+ - 4.5	4.5+ - 6.3	6.3+ - 7.5									
9			4.2+ - 5.7	5.7+ 6.9	6.9+ - 7.5								
10			3.6+ - 4.5	4.5+ - 5.4	5.4+ - 6.6	6.6+ 7.5							
11			2.7+ - 3.9	3.9+ - 4.2	4.2+ - 5.4	5.4+ - 6.3	6.3+ 7.5						
12			To 2.1	2.1+ - 3.0	3.0+ - 3.9	3.9+ - 4.2	4.2+ - 5.1	5.1+ - 6.0	6.0+ - 7.2	7.2+ - 7.5			
13			3.6+ - 4.2	4.2+ - 5.4	5.4+ - 6.3	6.3+ - 7.5							
14			3.3+ - 4.2	4.2+ 5.1	5.1+ - 6.0	6.0+ - 7.2	7.2+ 7.5						
15			3.0+ - 3.9	3.9+ - 4.8	4.8+ - 5.7	5.7+ - 6.9	6.9+ - 7.5						
16			2.7+ - 3.9	3.9+ - 4.5	4.5+ - 5.4	5.4+ - 6.6	6.6+ - 7.5						
17			To 2.7	2.7+ - 3.6	3.6+ - 3.9	3.9+ - 4.8	4.8+ - 6.0	6.0+ - 7.2	7.2+ - 7.5				
18			To 2.1	2.1+ - 3.0	3.0+ - 3.6	3.6+ - 4.2	4.2+ - 5.1	5.1+ - 6.3	6.3+ - 7.5				
19			To 1.8	1.8+ - 2.4	2.4+ - 3.3	3.3+ - 3.6	3.6+ - 4.5	4.5+ - 5.4	5.4+ - 6.6	6.6+ - 7.5			
20													
21			1.8+ - 3.0	3.0+ - 3.6	3.6+ - 4.2	4.2+ - 5.4	5.4+ - 6.6	6.6+ - 7.5					
22			To 2.7	2.7+ - 3.6	3.6+ - 3.9	3.9+ - 5.1	5.1+ - 6.0	6.0+ - 7.2	7.2+ - 7.5				
23			1.8+ - 3.0	3.0+ - 3.6	3.6+ - 4.2	4.2+ - 5.4	5.4+ - 6.6	6.6+ - 7.5					
24			To 2.7	2.7+ - 3.6	3.6+ - 3.9	3.9+ - 5.1	5.1+ - 6.0	6.0+ - 7.2	7.2+ - 7.5				
25			3.3+ - 3.9	3.9+ - 5.1	5.1+ - 6.0	6.0+ - 7.2	7.2+ 7.5						
26			2.7+ - 3.9	3.9+ - 4.5	4.5+ - 5.4	5.4+ - 6.6	6.6+ - 7.5						
27			2.7+ - 3.9	3.9+ - 4.5	4.5+ - 5.4	5.4+ - 6.6	6.6+ - 7.5						
28			2.7+ - 3.9	3.9+ - 4.2	4.2+ - 5.4	5.4+ - 6.3	6.3+ - 7.5						
29			2.4+ - 3.9	3.9+ - 4.2	4.2+ - 5.1	5.1+ - 6.3	6.3+ - 7.5						
30			2.4+ - 3.6	3.6+ - 3.9	3.9+ - 5.1	5.1+ - 6.0	6.0+ - 7.2	7.2+ - 7.5					
31			1.8+ - 3.0	3.0+ - 3.9	3.9+ - 4.2	4.2+ - 5.4	5.4+ - 6.3	6.3+ - 7.5					
32			1.8+ - 2.7	2.7+ - 3.6	3.6+ - 3.9	3.9+ - 5.1	5.1+ - 6.3	6.3+ - 7.5					
33			2.1+ - 3.3	3.3+ - 3.6	3.6+ - 4.5	4.5+ - 5.7	5.7+ - 6.9	6.9+ - 7.5					
34			1.8+ - 3.0	3.0+ - 3.6	3.6+ - 4.2	4.2+ - 5.1	5.1+ - 6.3	6.3+ 7.5					
35			2.1+ - 3.3	3.3+ - 3.6	3.6+ - 4.5	4.5+ - 5.7	5.7+ - 6.9	6.9+ - 7.5					
36			1.8+ - 3.0	3.0+ - 3.6	3.6+ - 4.2	4.2+ - 5.1	5.1+ - 6.3	6.3+ - 7.5					
37			To 1.8	1.8+ - 2.7	2.7+ - 3.3	3.3+ - 3.6	3.6+ - 4.5	4.5+ - 5.7	5.7+ - 6.9	6.9+ - 7.5			
38				To 2.4	2.4+ - 3.6	3.6+ - 3.9	3.9+ - 4.8	4.8+ - 6.0	6.0+ - 7.2	7.2+ - 7.5			
39				To 2.1	2.1+ - 3.0	3.0+ - 3.6	3.6+ - 3.9	3.9+ - 4.8	4.8+ - 6.0	6.0+ 6.9	6.9+ - 7.5		
40													
41					To 2.1	2.1+ 2.7	2.7+ - 3.6	3.6+ - 3.9	3.9+ - 4.5	4.5+ - 5.4	5.4+ - 6.6	6.6+ - 7.5	
42					To 1.8	1.8+ - 2.7	2.7+ - 3.3	3.3+ - 3.6	3.6+ - 4.2	4.2+ - 5.1	5.1+ - 6.3	6.3+ - 7.2	7.2+ - 7.5
43													
44		4.2+ - 5.1	5.1+ - 7.2	7.2+ - 7.5									
45			4.2+ - 5.7	5.7+ - 6.6	6.6+ - 7.5								
46			4.2+ - 5.7	5.7+ - 6.6	6.6+ - 7.5								
47			4.2+ - 5.7	5.7+ - 6.9	6.9+ - 7.5								
48			4.2+ - 5.7	5.7+ - 6.6	6.6+ - 7.5								
49			4.2+ - 5.1	5.1+ - 6.3	6.3+ - 7.2	7.2+ - 7.5							
50	To 2.7	2.7+ - 3.6	3.6+ - 5.4	5.4+ - 6.3	6.3+ - 7.2	7.2+ - 7.5							
51			4.2+ - 5.1	5.1+ - 6.0	6.0+ - 7.2	7.2+ 7.5							
52			4.2+ - 5.1	5.1+ - 6.0	6.0+ - 7.2	7.2+ - 7.5							

COL. SIZE	76.2 x 3.2	88.9 x 4.8	101.6 x 4.8	101.6 x 6.4	114.3 x 6.4	127.0 x 6.4	139.7 x 6.4	152.4 x 6.4	165.1 x 6.4	177.8 x 6.4	190.5 x 6.4
FOOTING	0 x 750	450 x 750	450 x 750	450 x 750	450 x 750	450 x 825	450 x 900	450 x 975	600 x 900	600 x 1000	600 x 1050
Sign Identification Number	HEIGHT (m)										
53		3.9+ - 4.8	4.8+ - 5.7	5.7+ 6.6	6.6+ - 7.5						
54		3.6+ 4.5	4.5+ - 5.4	5.4+ - 6.3	6.3+ - 7.5						
55		3.6+ 4.5	4.5+ - 5.4	5.4+ 6.6	6.6+ 7.5						
56	To 2.4	2.4+ - 3.9	3.9+ 5.1	5.1+ 6.0	6.0+ - 7.2	7.2+ - 7.5					
57		3.0+ - 4.2	4.2+ - 4.8	4.8+ - 6.0	6.0+ 6.9	6.9+ 7.5					
58		3.3+ - 3.9	3.9+ - 5.1	5.1+ 6.0	6.0+ - 7.2	7.2+ - 7.5					
59		3.0+ 3.9	3.9+ - 4.8	4.8+ - 6.0	6.0+ - 6.9	6.9+ - 7.5					
60		3.0+ 3.9	3.9+ - 4.8	4.8+ - 5.7	5.7+ 6.9	6.9+ - 7.5					
61		2.4+ - 3.9	3.9+ - 4.2	4.2+ - 5.1	5.1+ - 6.3	6.3+ - 7.5					
62		2.4+ - 3.9	3.9+ 4.2	4.2+ - 5.1	5.1+ - 6.3	6.3+ - 7.5					
63		2.7+ - 3.9	3.9+ - 4.2	4.2+ 5.4	5.4+ - 6.3	6.3+ - 7.5					
64	To 1.8	1.8+ 3.6	3.6+ - 4.2	4.2+ - 4.8	4.8+ - 6.0	6.0+ 7.2	7.2+ - 7.5				
65		2.4+ - 3.6	3.6+ - 3.9	3.9+ - 5.1	5.1+ - 6.0	6.0+ - 7.2	7.2+ - 7.5				
66		To 3.3	3.3+ - 3.9	3.9+ - 4.5	4.5+ - 5.7	5.7+ - 6.9	6.9+ - 7.5				
67		2.1+ - 3.3	3.3+ - 3.9	3.9+ - 4.8	4.8+ 5.7	5.7+ - 6.9	6.9+ - 7.5				
68		2.1+ 3.6	3.6+ - 3.9	3.9+ - 4.8	4.8+ - 5.7	5.7+ - 7.2	7.2+ 7.5				
69		2.1+ - 3.3	3.3+ - 3.9	3.9+ - 4.5	4.5+ - 5.4	5.4+ 6.6	6.6+ 7.5				
70		1.8+ - 3.0	3.0+ - 3.6	3.6+ - 4.2	4.2+ - 5.1	5.1+ - 6.3	6.3+ - 7.5				
71											
72		To 3.0	3.0+ - 3.9	3.9+ - 4.2	4.2+ - 5.1	5.1+ - 6.3	6.3+ - 7.5				
73		1.8+ - 2.7	2.7+ - 3.6	3.6+ - 3.9	3.9+ - 5.1	5.1+ - 6.3	6.3+ - 7.5				
74											
75		To 2.4	2.4+ - 3.3	3.3+ - 3.9	3.9+ - 4.5	4.5+ - 5.4	5.4+ - 6.6	6.6+ - 7.5			
76		To 2.4	2.4+ - 3.3	3.3+ - 3.9	3.9+ - 4.5	4.5+ - 5.7	5.7+ - 6.9	6.9+ - 7.5			
77		To 2.4	2.4+ - 3.3	3.3+ - 3.6	3.6+ - 4.5	4.5+ - 5.4	5.4+ - 6.6	6.6+ - 7.5			
78		To 2.4	2.4+ - 3.3	3.3+ - 3.9	3.9+ - 4.5	4.5+ - 5.4	5.4+ 6.6	6.6+ - 7.5			
79											
80		To 1.8	1.8+ - 2.4	2.4+ - 3.3	3.3+ - 3.9	3.9+ - 4.5	4.5+ - 5.4	5.4+ - 6.6	6.6+ - 7.5		
81			To 2.4	2.4+ - 3.0	3.0+ - 3.6	3.6+ - 4.2	4.2+ - 5.1	5.1+ - 6.3	6.3+ - 7.5		
82											
83											
84											
85											
86			To 1.8	1.8+ - 2.4	2.4+ - 3.3	3.3+ - 3.6	3.6+ - 4.5	4.5+ - 5.4	5.4+ - 6.3	6.3+ - 7.5	
87				To 2.1	2.1+ 3.0	3.0+ - 3.6	3.6+ - 3.9	3.9+ - 4.8	4.8+ - 5.7	5.7+ - 6.9	6.9+ - 7.5
88											
89											
90											
91											

The Column Size and Footings are in mm.

145 km/h WIND LOADING

COLUMN SIZE, COLUMN HEIGHT & COLUMN FOOTINGS

STATE OF FLORIDA DEPARTMENT OF TRANSPORTATION
STRUCTURES DESIGN

SINGLE COLUMN GROUND SIGNS

	Names	Dates
Designed By		
Drawn By		4-94
Checked By		
F.H.W.A. Approved:		

Approved By Jerry Potter

Revision No.	Sheet No.	Index No.
94	2 of 2	11864

COL. SIZE	50.8x3.2	50.8x3.2	50.8x3.2	63.5x3.2	63.5x3.2	63.5x3.2	76.2x3.2	76.2x3.2	76.2x3.2	*
FOOTING	600	600	600	675	675	675	750	750	750	*
COL. SIZE	3.7 kg/m	3.7 kg/m	4.5 kg/m	6.0 kg/m	6.0 kg/m	N/A	N/A	N/A	N/A	*
FOOTING	900	900	900	900	900	N/A	N/A	N/A	N/A	*
COL. SIZE	W = 38.1	W = 44.5	W = 44.5	W = 50.8	W = 57.2	W = 57.2	W = 57.2	W = 63.5	N/A	*
FOOTING	900	900	900	900	900	900	900	900	N/A	*
Sign Identification Number	HEIGHT (METERS)									
1	To 2.4	—	2.4+-3.0	3.0+-3.9	—	—	3.9+-4.2			
2	To 1.8	1.8+-2.1	2.1+-2.4	2.4+-3.6	—	3.6+-3.9	3.9+-4.2			
3		To 1.8	1.8+-2.1	2.1+-2.7	2.7+-3.3	—	3.3+-3.6	3.6+-3.9		
4										
5										
6					To 1.8	—	1.8+-2.4	2.4+-2.7		
7										
8	To 2.4	2.4+-2.7	2.7+-3.0	3.0+-3.9	—	3.9+-4.2				
9		To 2.1	2.1+-2.4	2.4+-3.3	3.3+-3.6	3.6+-3.9	—	3.9+-4.2		
10				To 2.4	2.4+-2.7	—	2.7+-3.0	3.0+-3.6		
11					To 1.8	—	1.8+-2.1	2.1+-2.7		
12										
13					To 2.4	—	2.4+-2.7	2.7+-3.3	3.3+-3.6	
14				To 1.8	1.8+-2.1	—	2.1+-2.4	2.4+-3.0	3.0+-3.3	
15				To 1.8	1.8+-2.1	—	2.1+-2.4	2.4+-3.0		
16					To 1.8	—	1.8+-2.1	2.1+-2.7		
17										
18										
19										
20										
21							To 1.8			
22										
23								To 1.8		
24										
25				To 1.8	1.8+-2.1	—	2.1+-2.7	2.7+-3.3		
26				To 1.8	—	—	1.8+-2.4	2.4+-2.7		
27					To 1.8	—	1.8+-2.1	2.1+-2.7		
28					To 1.8	—	1.8+-2.1	2.1+-2.7		
29							To 2.1	2.1+-2.4		
30							To 1.8	1.8+-2.4		
31								To 1.8		
32								To 1.8		
33							To 1.8	1.8+-2.1		
34								To 1.8		
35								To 2.1		
36								To 1.8		
37										
38										
39										
40										
41										
42										
43										
44	To 2.7	—	2.7+-3.0	3.0+-3.9	—	3.9+-4.2				
45	To 1.8	1.8+-2.1	2.1+-2.7	2.7+-3.3	3.3+-3.6	3.6+-3.9	3.9+-4.2			
46	To 1.8	1.8+-2.1	2.1+-2.7	2.7+-3.3	3.3+-3.6	3.6+-3.9	3.9+-4.2			

COL. SIZE	50.8x3.2	50.8x3.2	50.8x3.2	63.5x3.2	63.5x3.2	63.5x3.2	76.2x3.2	76.2x3.2	76.2x3.2	*	ALUMINUM ROUND POST
FOOTING	600	600	600	675	675	675	750	750	750	*	
COL. SIZE	3.7 kg/m	3.7 kg/m	4.5 kg/m	6.0 kg/m	6.0 kg/m	N/A	N/A	N/A	N/A	*	STEEL FLANGED CHANNEL POST
FOOTING	900	900	900	900	900	N/A	N/A	N/A	N/A	*	
COL. SIZE	W = 38.1	W = 44.5	W = 44.5	W = 50.8	W = 57.2	W = 57.2	W = 57.2	W = 63.5	N/A	*	STEEL SQUARE TUBE POST
FOOTING	900	900	900	900	900	900	900	900	N/A	*	
Sign Identification Number	HEIGHT (METERS)										
47	To 1.8	1.8+-2.1	2.1+-2.7	2.7+-3.3	3.3+-3.6	3.6+-3.9	3.9+-4.2				
48		To 2.1	2.1+-2.4	2.4+-3.3	3.3+-3.6	—	3.6+-3.9	3.9+-4.2			
49		To 1.8	1.8+-2.1	2.1+-3.0	3.0+-3.3	—	3.3+-3.6	3.6+-4.2			
50											
51		To 1.8	1.8+-2.1	2.1+-2.7	2.7+-3.3	—	3.3+-3.6	3.6+-4.2			
52			To 1.8	1.8+-2.7	2.7+-3.0	—	3.0+-3.6	3.6+-3.9			
53			To 1.8	1.8+-2.4	2.4+-3.0	—	3.0+-3.3	3.3+-3.9			
54				To 2.4	2.4+-2.7	—	2.7+-3.3	3.3+-3.6			
55				To 2.4	2.4+-2.7	—	2.7+-3.0	3.0+-3.6			
56											
57				To 2.1	—	—	2.1+- 2.7	2.7+-3.0			
58				To 1.8	1.8+-2.1	—	2.1+- 2.7	2.7+-3.3			
59				To 1.8	1.8+-2.1	—	2.1+- 2.7	2.7+-3.0			
60				To 1.8	1.8+-2.1	—	2.1+-2.4	2.4+-3.0			
61				To 1.8	—	—	1.8+-2.4				
62					To 1.8	—	1.8+-2.1	2.1+- 2.4			
63					To 1.8	—	1.8+-2.1	2.1+-2.7			
64											
65							To 1.8	1.8+-2.4			
66											
67							To 1.8	1.8+-2.1			
68									To 2.1		
69								To 2.1			
70								To 1.8			
71											
72											
73								To 1.8			
74											
75											
76											
77											
78											
79											
80											
81											
82											
83											
84											
85											
86											
87											
88											
89											
90											
91											

* Aluminum Round Post dimensions are given in millimeters (mm). The size is shown as outside diameter times wall thickness.

Steel Flanged Channel Post sizes are given in kilograms (kg) per linear meter. Section definitions and properties are shown on Sheet 2 of 2. (See QPL for approved posts).

Steel Square Tube Post dimensions for "W" are given in millimeters (mm). The "W" dimension is defined on Section F-F. (See QPL for approved posts).

Footing dimensions shown are given in millimeters (mm). The dimension shown is the minimum embedment of the driven post.

NOTES

1. This Standard Index 11865 provides designs for driven single post sign installations for implementation at all locations within the State of Florida. The designs adhere to the following criteria:
   a. Mounting Height = 4.2 Meters Maximum
   b. Sign(s) Area = 2.3 Square Meters Maximum
   c. Sign(s) Width: Single = 900 mm Maximum
      Dual = 1200 mm Maximum (See Detail "A")
   d. Driven Post only
2. Designs exceeding above criteria or requiring concrete footings are included on Index 11861 thru 11864.
3. Specifications for Aluminum materials, Sign Panel Details, etc. are shown on standard Index 11860. Additional information and details are shown on Index 11861 thru 11864. Therefore, work this Standard Index 11865 with Standard Indices 11860 to 11864.
4. Sign Bracket requirements are shown on Index 11860 (USE 130 km/h WIND ZONE). If Flanged Channels or Square Tubes are used, substitute two M8 bolts for each Type I Bracket. See Detail "B".
5. All posts shall be installed Plumb.
6. Steel for Flanged Channel Posts shall conform with ASTM A499 Grade 415, or ASTM A576 Grade 1080.
7. Steel for fabrication of square Tubes shall conform with ASTM A446/A446M or ASTM A570/A570M. HOWEVER, STEEL FROM THE FABRICATED SQUARE TUBES MUST MEET A CERTIFIED MINIMUM YIELD STRENGTH OF 380 MPa.
8. Steel Flanged Channel Posts with a mass of 6.0 Kg/m are non-frangible and shall be installed with approved breakaway (frangible) bases. See Detail "C". The base and the sign posts shall be same size and type and the splice shall be 150 mm long and fastened with two bolts, 100 mm apart. The bolts shall be wrench-tightened sufficiently to clamp splice assembly tightly together. Bolts shall conform with ASTM A 354 Grade BH or SAE J995 Grade 8. Washers and spacers shall conform with ASTM A307 or A36/A36M.
9. Steel Flanged Channel Posts with masses of 3.7 kg/m and 4.5 kg/m, all Aluminum Round Posts and all Steel Square Tubes included in this standard are frangible and do not require breakaway (frangible) bases. However, the contractor may mount frangible posts on approved breakaway bases.
10. Bolts, Nuts and washers not included in note 8 above, shall conform with ASTM A307.
11. Steel Posts shall be selected from the Department's book of Qualified Product List (QPL).
12. All steel posts, and hardware shall be galvanized in accordance with ASTM A123 or A153.
13. Shop Drawings: If the contractor proposes to utilize sign panel connections and/or breakaway devices not shown in this standard or in the above referenced standards, the Contractor shall submit shop drawings for approval.
14. All dimensions are in millimeters (mm), unless otherwise noted.

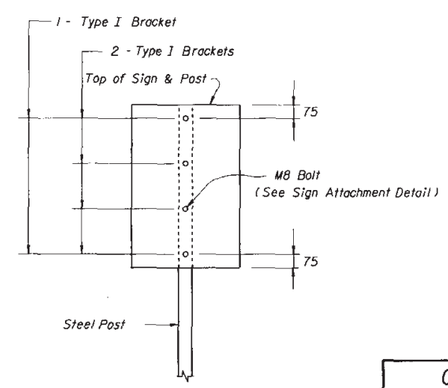

DETAIL "B" (See Note No. 4)

SIGN MOUNTING USING CHANNELS OR SQUARE TUBES

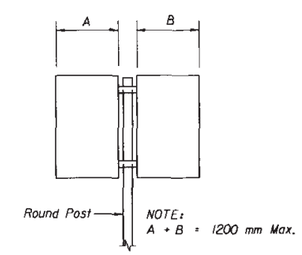

DETAIL "A"

HEIGHT = 4.2 m MAX.
(ALL WIND ZONES)

COLUMN SIZE, COLUMN HEIGHT & COLUMN FOOTINGS

STATE OF FLORIDA DEPARTMENT OF TRANSPORTATION
STRUCTURES DESIGN

SINGLE COLUMN GROUND SIGNS

	Names	Dates
Designed By	JMD	4-94
Drawn By	SHM	4-94
Checked By	AJG	4-94

Approved By

F.H.W.A. Approved:

Revision No.	Sheet No.	Index No.
94	1 of 2	11865

APPROVED STEEL FLANGED CHANNEL POSTS					
Kg/m*	Type	A(mm)	B(mm)	C(mm)	S x(mm³)
3.7	F	39.7	79.4	31.8	5080
3.7	M	38.1	77.8	32.5	5130
4.5	F	44.5	88.9	41.3	7050
4.5	M	47.6	88.9	33.4	7330
6.0	F	44.5	88.9	42.4	9180
6.0	M	49.2	88.9	33.4	10240

* ± 4 %

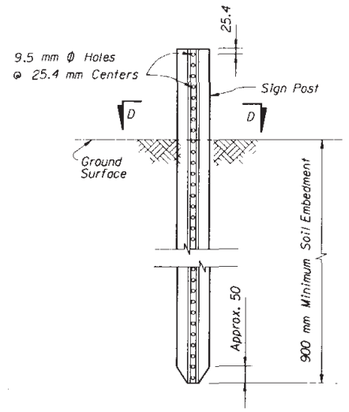

ELEVATION

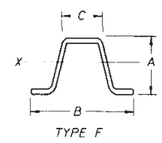

TYPE F

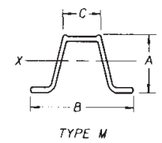

TYPE M

SECTION D-D

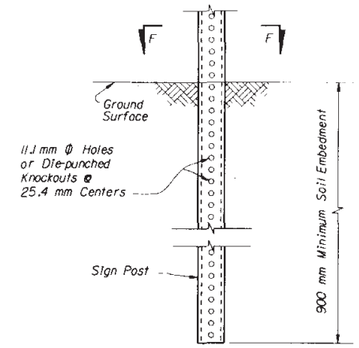

ELEVATION

Showing Mounting Without Anchor Tube

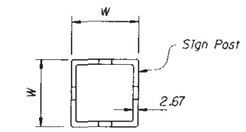

SECTION F-F

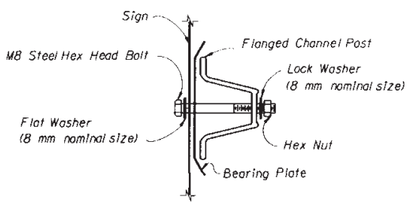

SIGN ATTACHMENT DETAIL

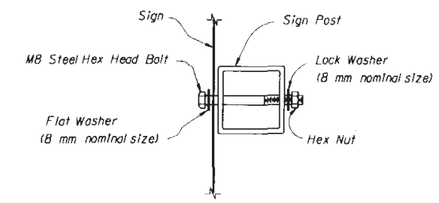

SIGN ATTACHMENT DETAIL

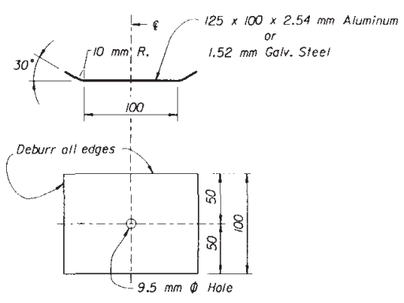

BEARING PLATE DETAIL

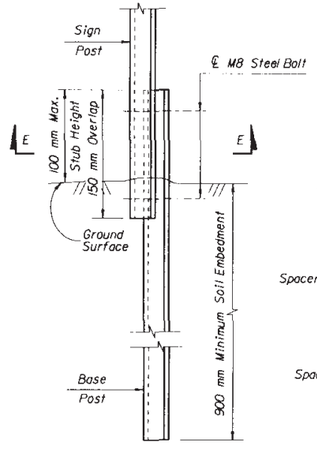

DETAIL "C"
(Approved Frangible Installation)

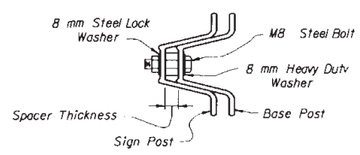

SECTION E-E

Spacer Thickness shall be as follows:

3.7 Kg/m Type M posts shall use 8 mm spacer.
Other posts shall use 16 mm spacer (or two 8 mm).

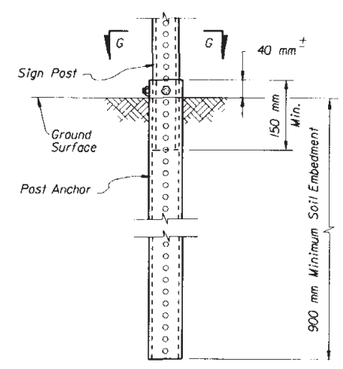

ELEVATION

Showing Mounting Using Optional Anchor Tube

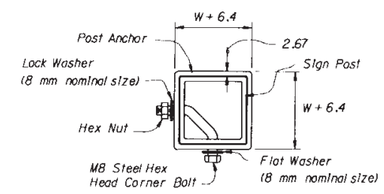

SECTION G-G

NOTE: All dimensions are in millimeters (mm), unless otherwise noted.

STEEL FLANGED CHANNEL POST DETAILS

STEEL SQUARE TUBE POST DETAILS

HEIGHT = 4.2 m MAX.
(ALL WIND ZONES)

COLUMN SIZE , COLUMN HEIGHT & COLUMN FOOTINGS

STATE OF FLORIDA DEPARTMENT OF TRANSPORTATION
STRUCTURES DESIGN

SINGLE COLUMN GROUND SIGNS

	Names	Dates
Designed By	JWD	4-94
Drawn By	SHM	4-94
Checked By	AJG	4-94
F.H.W.A. Approved:		

Approved By

Revision No.	Sheet No.	Index No.
94	2 of 2	11865

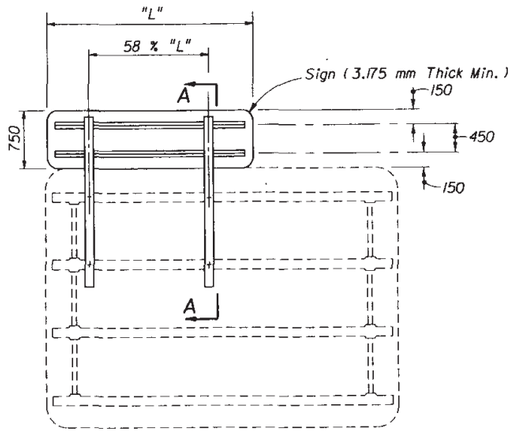

NOTE: Exit numbering panel shall be located to the right side for right exit and to the left for left exit.

Mounting of Exit Numbering Panels To Highway Signs

ELEVATION

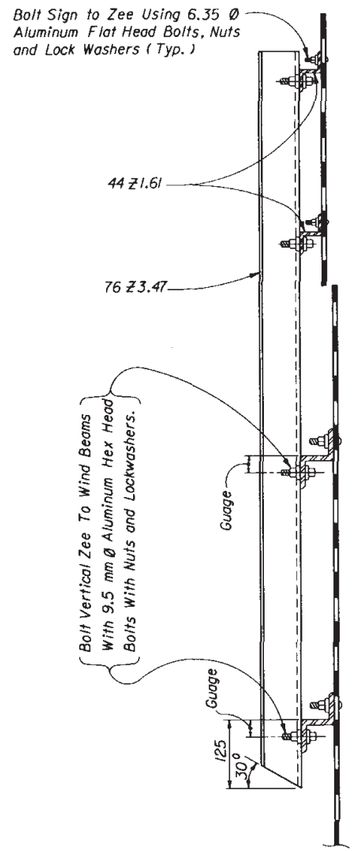

SECTION AA

GENERAL NOTES

DESIGN SPECIFICATION: Latest Standard specifications for structural supports for highway signs, luminaires and traffic signals, AASHTO.

SHEETS AND PLATES: Material used shall meet the requirements of Aluminum Association Alloy 6061-T6 and ASTM B209M. Sheets are to be degreased, etched, neutralized and treated with Alodine 1200, Iridite 14-2 Bonderite 721, or equal. No stenciling permitted on sheets.

MATERIALS: All aluminum materials shall meet the requirements of the Aluminum Association Alloy 6061T6 and also the following ASTM specifications for the following: Sheet and plates B209M; extruded shapes B221M and standard structural shapes B308/B308M.

ALUMINUM BOLTS, NUTS & LOCK WASHERS: Aluminum bolts shall meet the requirements of the Aluminum Association Alloy 2024-T4 or 6061-T6 (ASTM B211M). The bolts shall have an anodic coating of at least 0.005 thick and be chromate sealed. Lockwashers shall meet the requirement of Aluminum Association Alloy 7075-T6 (ASTM B221M). Nuts shall meet the requirement of Aluminum Association Alloy 6262-T9 or 6061-T6.

SIGN FACE: All sign face corners shall be rounded . See sign layout sheet for dimension "L" and sign face details.

MATERIAL STRESSES: All allowable stresses are in accordance with standard specifications for structural supports for highway signs, luminaires and traffic signals. AASHTO for all materials shown in the plans.

For mounting details refer to Index No. 11037.

STATE OF FLORIDA DEPARTMENT OF TRANSPORTATION
STRUCTURES DESIGN

MOUNTING EXIT NUMBERING PANELS TO HIGHWAY SIGNS

	Names	Dates	Approved By
Designed By	CK/CWB	07/82	
Drawn By			
Checked By	CK	07/82	
F.H.W.A. Approved:			

Revision No.	Sheet No.	Index No.
94	1 of 1	13417

CASE I

For use on Freeway and Expressway systems for signs on mainline.

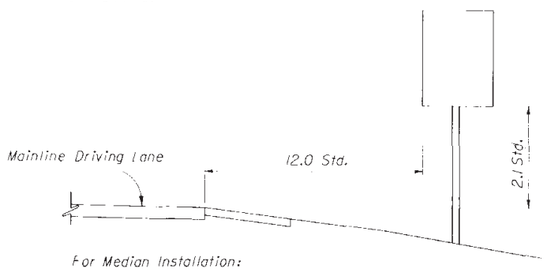

For Median Installation:
If Median Width Does Not Allow Std. Offset From Both Roadways, Center Sign In Median.

CASE II

For Use In All Rural Roads And On Freeway And Expressway Ramps.

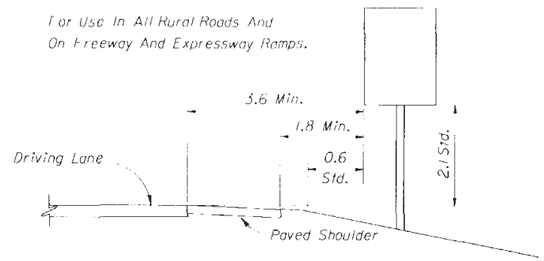

4.2 m Horizontal Clearance Standard On All Freeway And Expressway Ramps

For Sections Without Paved Shoulder The 1.8 m Min Does Not Apply.

CASE III

For Use On All Roads With Signs Mounted Behind Side Walk.

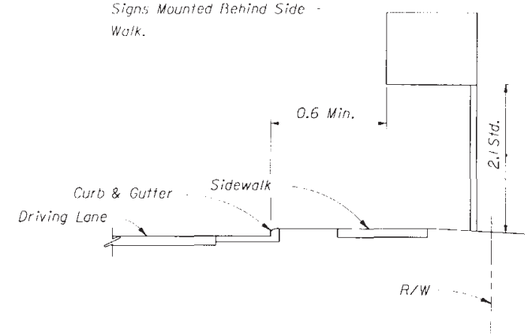

CASE IV (Merge Sign)

For Use On All Rural, Freeway And Expressway Systems.

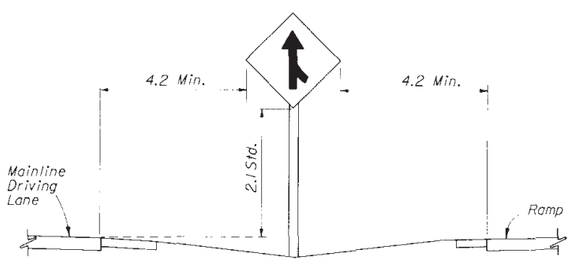

CASE V

For Use In Business Or Residential Areas Only.

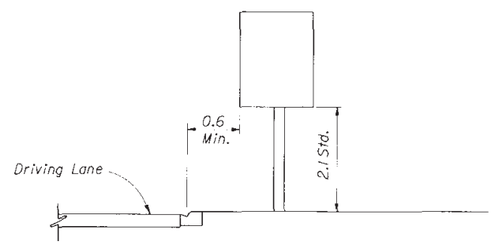

CASE VI

For Use On All Roadways With Signs Behind Guardrail.

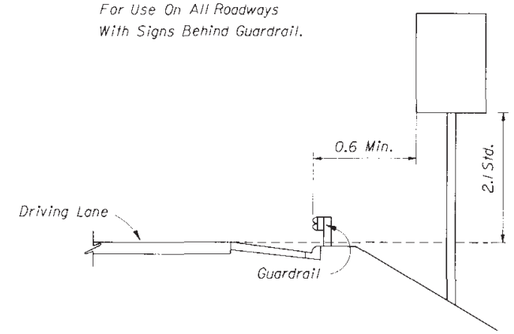

CASE VII (REST AREA & EXIT GORE SIGNS)

For Use On All Freeway And Expressway Systems

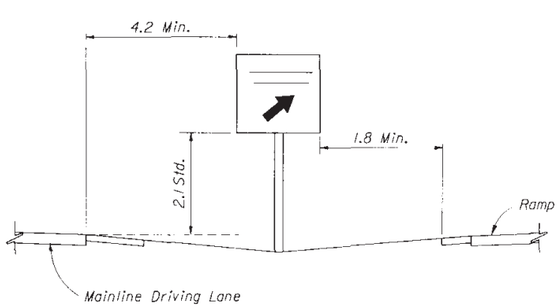

CASE VIII

Sign On Island

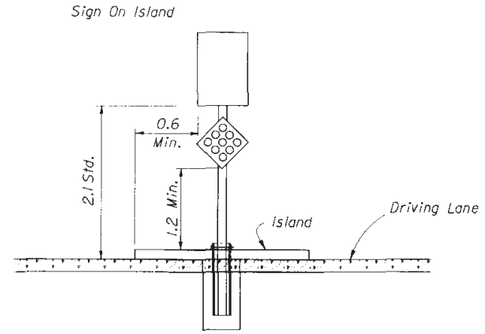

Center Sign Column On Island

CASE IX (MILE POST MARKER)

For More Information Refer To Part 2D-46 Of The Manual On Uniform Traffic Control Devices

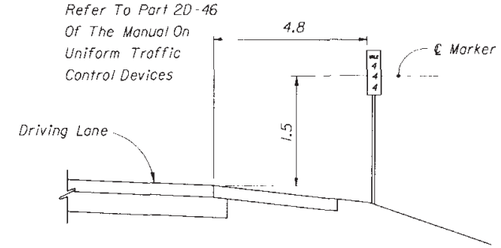

GENERAL NOTES:

1. The typical sections shown hereon serve as a guide for locating the traffic signs required under various roadside conditions. For size and details of sign construction and footing, refer to the appropriate standard index drawing for roadside sign.

2. It shall be the CONTRACTORS respon sibility to verify the length of sign supports in the field prior to fabrication.

3. Roadside signs shall be installed at an angle of 1 to 4 degrees away from the traffic flow(see illustration).
Shoulder mounted signs shall be rotated counterclockwise and median mounted signs rotated clockwise.
Signs on curves shall be mounted as noted above from the perpendicular to the motorists line of sight.

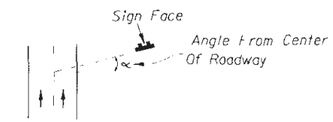

4. The setback for stop and yield signs may be reduced to 0.9 m minimum from the driving lane if required for visibility in business or residential sections with no curb and speeds of 50 km/h or less.

5. The mounting heights are measured from the bottom of the sign panel to a horizontal line extended from the edge of the driving lane. If the standard heights cannot be met, the minimum heights are as follows:

Expressway & Freeway Systems	2.1 m
Other Roadway Systems	
Rural	1.5 m
Urban (including residential with parking and /or pedestrian activity)	2.1 m

If a secondary sign is mounted below the major sign, the major sign shall be at least 2.4 m and the secondary sign at least 1.5 m for expressway & freeway systems and for other systems the height to the secondary sign shall be at least 1.2 m for rural and urban sections.

6. Sign supports should never be placed in ditches where erosion might affect the proper operation of the breakaway feature. It is also possible that a vehicle entering the ditch might be guided into the support.

STATE OF FLORIDA DEPARTMENT OF TRANSPORTATION
TRAFFIC DESIGN

TYPICAL SECTIONS FOR PLACEMENT OF SINGLE & MULTI-COLUMN SIGNS

	Names	Dates	Approved By Clark A. Scott, State Traffic Plans Engineer
Designed By		03-75	
Drawn By			
Checked By			
F.H.W.A. Approved:			

Revision No.	Sheet No.	Index No.
94	1 of 1	17302

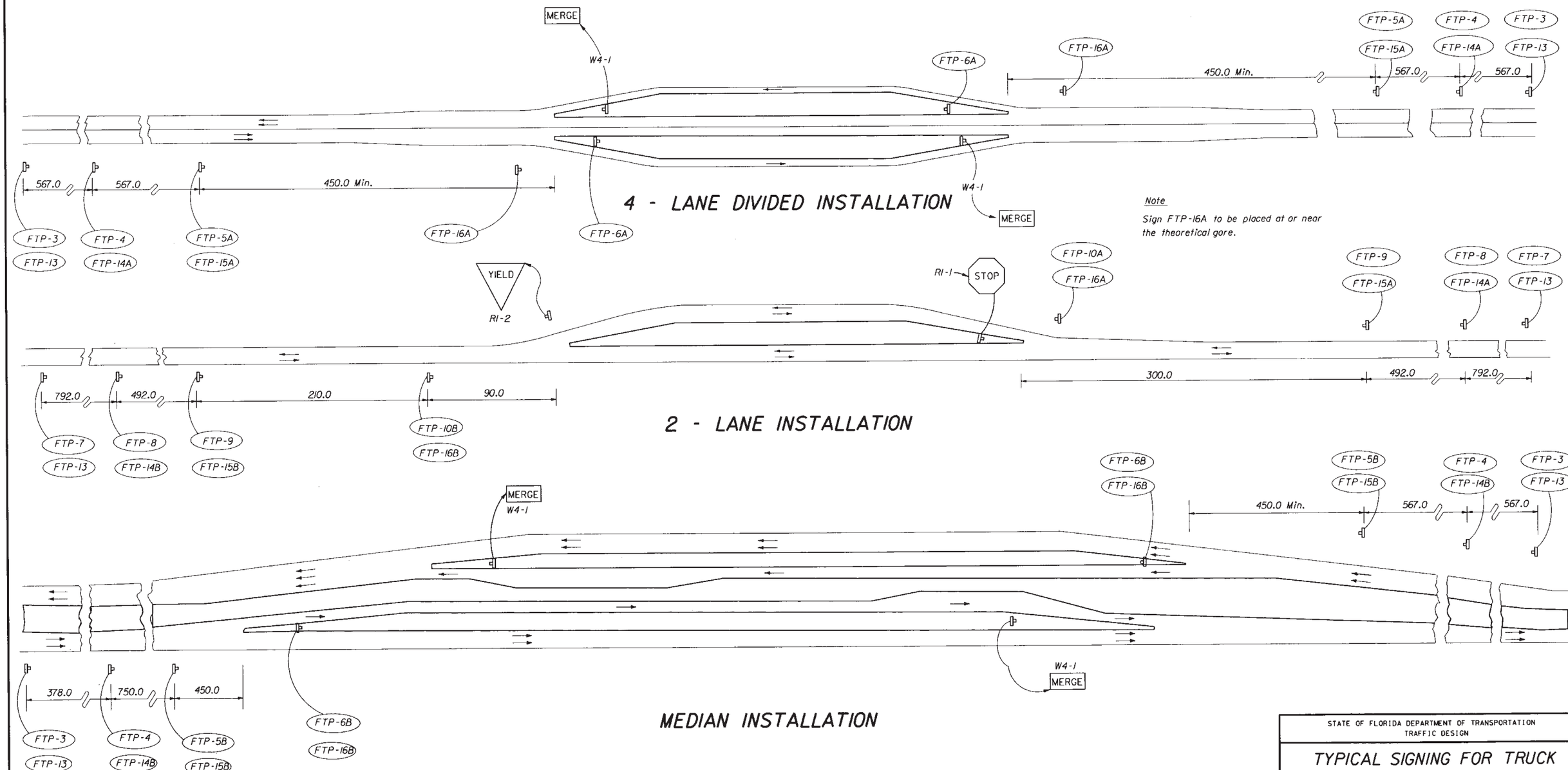

STATE OF FLORIDA DEPARTMENT OF TRANSPORTATION
TRAFFIC DESIGN

TYPICAL SIGNING FOR TRUCK WEIGH AND INSPECTION STATIONS

	Names	Dates
Designed By		01/75
Drawn By		
Checked By		01/75

Approved By Charles A. Scott
State Traffic Plans Engineer

F.H.W.A. Approved:

Revision No.	Sheet No.	Index No.
94	1 of 1	17328

Approach Speed (km/h)	Approach Speed (MPH)	Distance A (m)
40 To 60	25 To 35	60.0
61 To 70	36 To 45	105.0
71 To 90	46 To 55	150.0

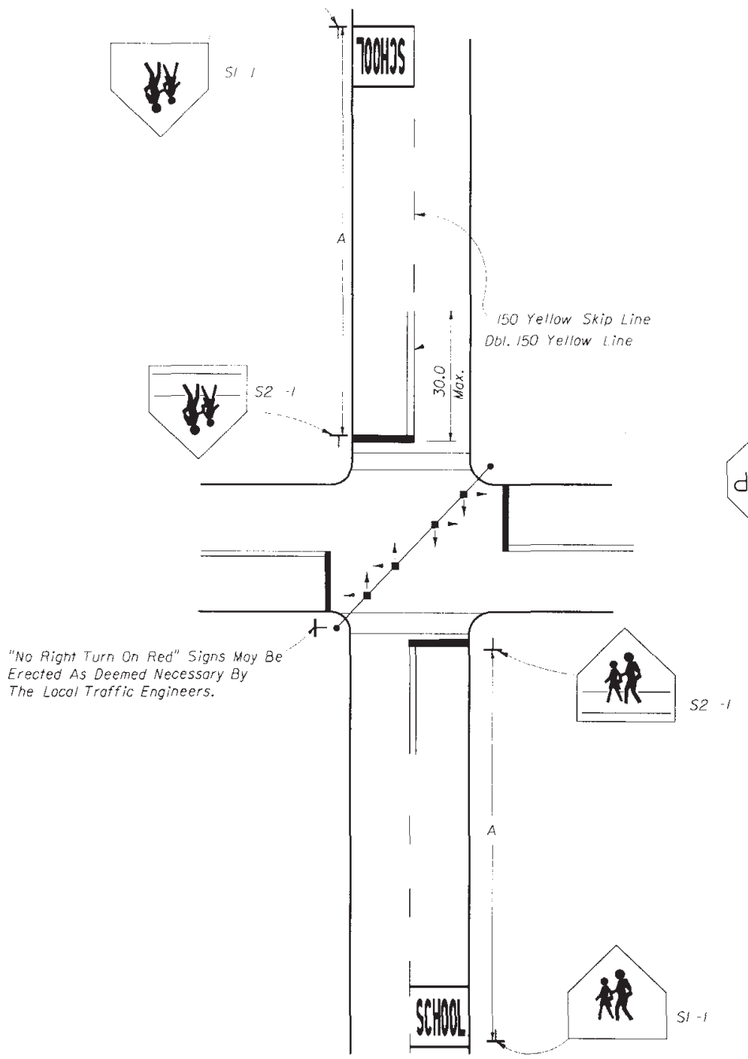

1. TRAFFIC CONTROL DEVICES FOR A SCHOOL CROSS-WALK AT A SIGNALIZED INTERSECTION

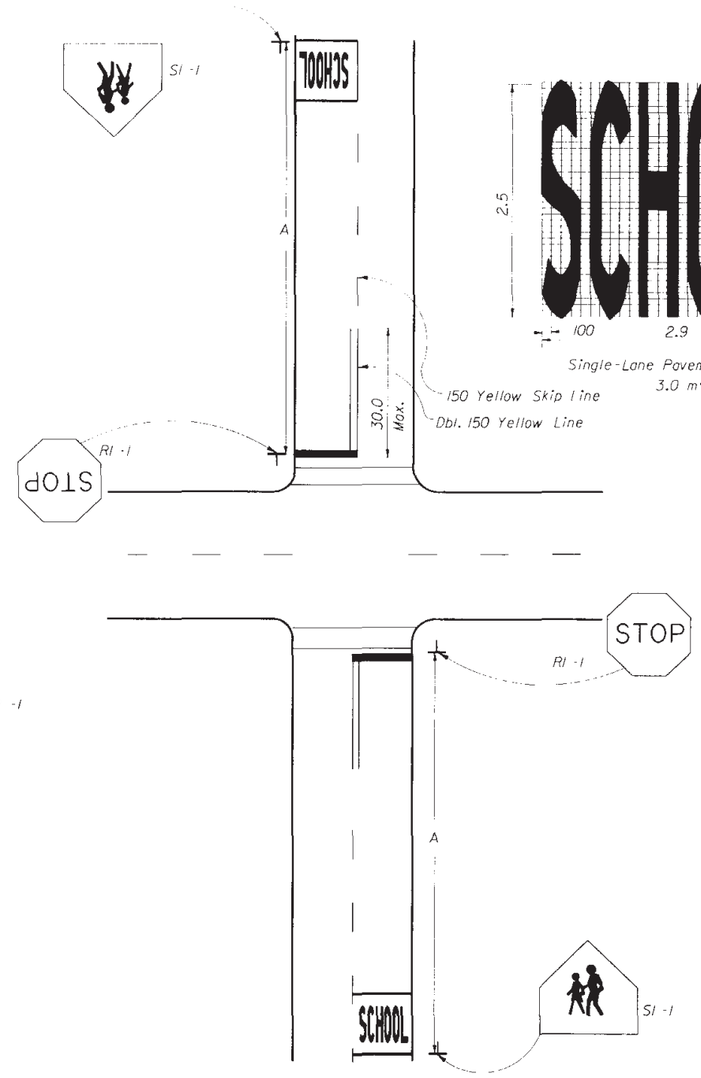

2. TRAFFIC CONTROL DEVICES FOR A SCHOOL CROSS-WALK AT A STOP CONTROLLED INTERSECTION

Note:
Special speed restrictions are not normally applicable to these two cases.

PAVEMENT MARKINGS

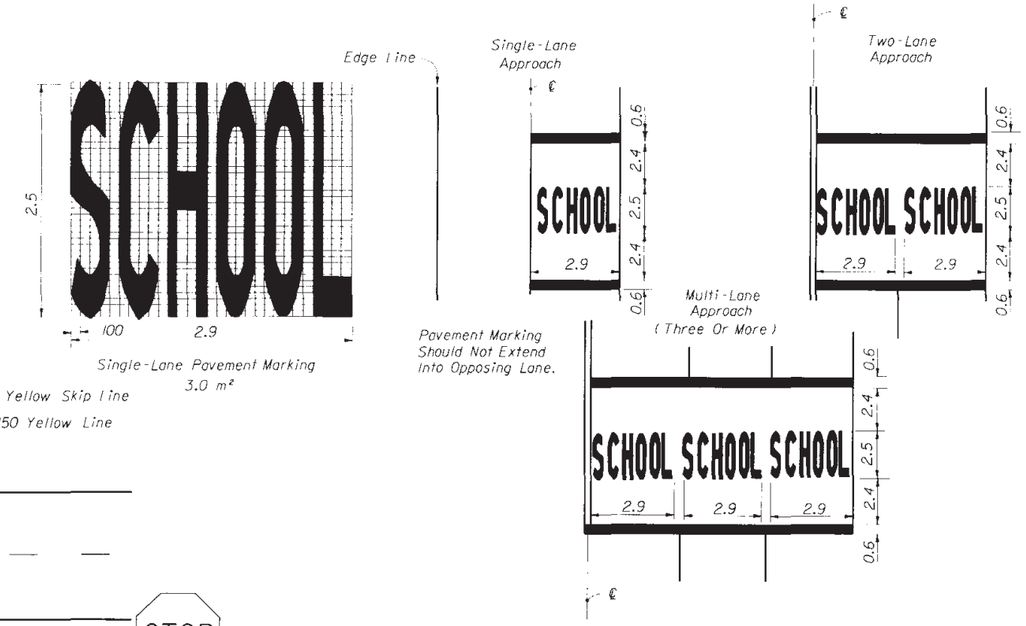

Notes

Signs shall be erected in accordance with Index No. 17302.

When computing pavement messages quantities do not include transverse lines.

All school signs shall be reflective.

School cross-walk width shall be 1.8 m min. 3.0 m std. without curb cut ramps 3.0 m min. with curb cut ramps. See Index No. 17346 sheet 9 of 9.

For signalized intersections or mid-block signalized crossings where flashing beacon speed limit signs (post mounted or overhead) are installed, the minimum distance from the speed limit sign to the stop line shall be 30.0 m. The sign shall not block the view of the signal.

STATE OF FLORIDA DEPARTMENT OF TRANSPORTATION
TRAFFIC DESIGN

SCHOOL SIGNS & MARKINGS

	Names	Dates
Designed By		07/76
Drawn By		
Checked By		07/76
F.H.W.A. Approved:		

Approved By
State Traffic Plans Engineer

Revision No.	Sheet No.	Index No.
94	1 of 6	17344

3. TRAFFIC CONTROL DEVICES WITH FLASHING BEACON FOR REDUCED SPEED ZONE AT A SCHOOL CROSS-WALK
(2 LANES - 2 WAY TRAFFIC)
(MIDBLOCK OR ON THRU STREET AT AN INTERSECTION)

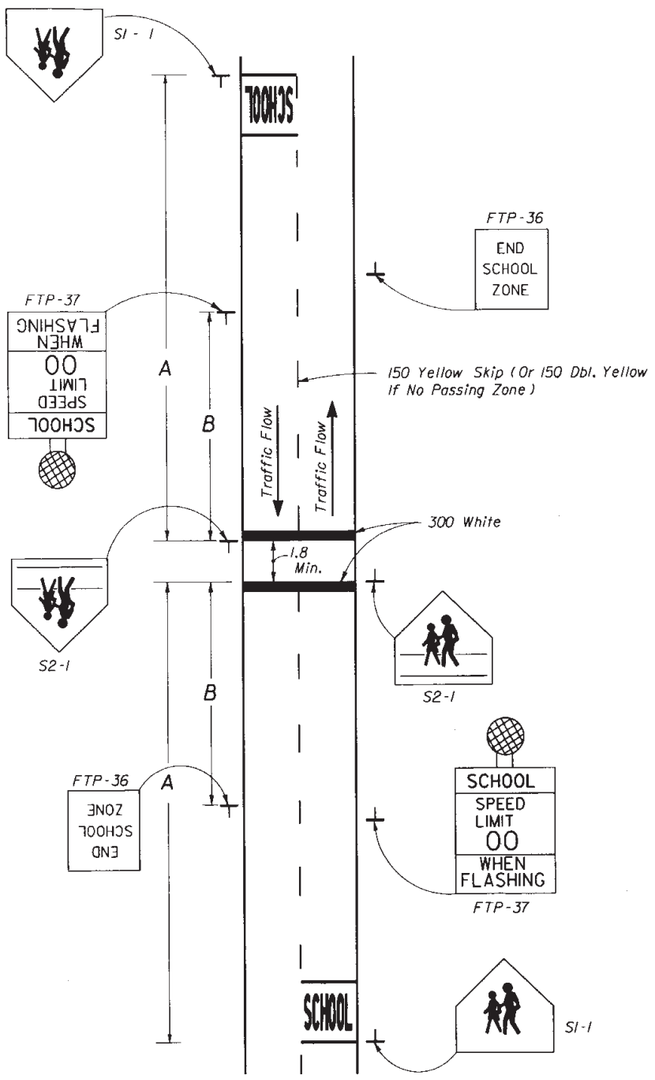

4. TRAFFIC CONTROL DEVICES FOR A REDUCED SPEED ZONE AT A SCHOOL CROSS-WALK (NO FLASHING BEACON)
(2 LANES - 2 WAY TRAFFIC)
(MIDBLOCK OR ON THRU STREET AT AN INTERSECTION)

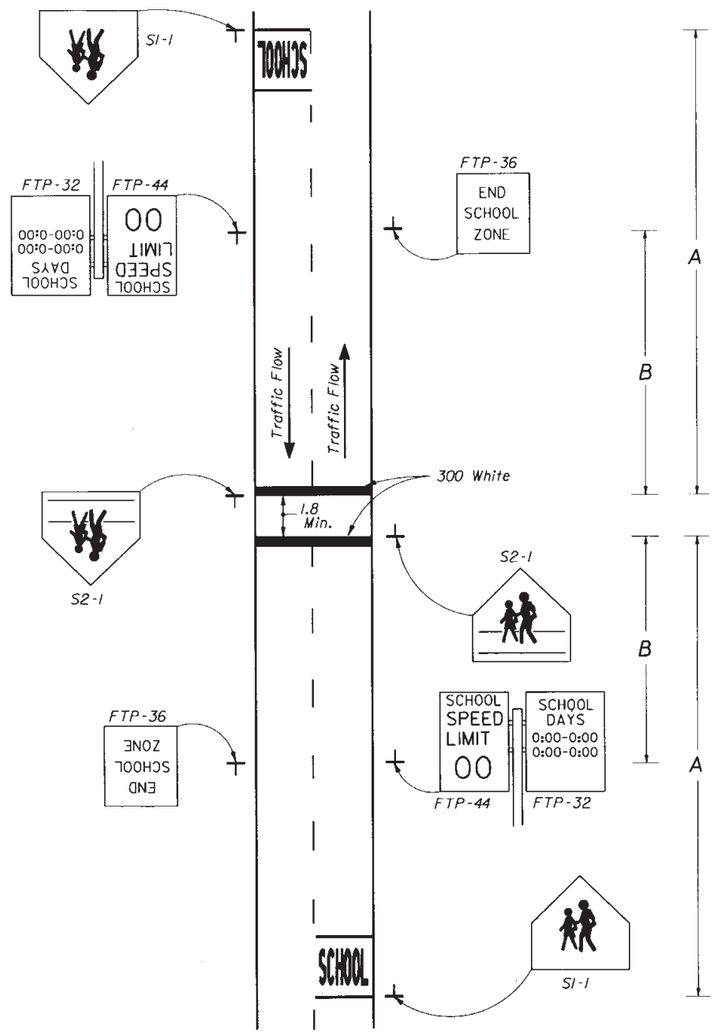

5. TRAFFIC CONTROL DEVICES FOR A REDUCED SPEED ZONE AT A SCHOOL CROSS-WALK WITH OVERHEAD FLASHING BEACON SPEED LIMIT SIGNS
(4 LANES UNDIVIDED - 2 WAY TRAFFIC)
(MIDBLOCK OR ON THRU STREET AT AN INTERSECTION)

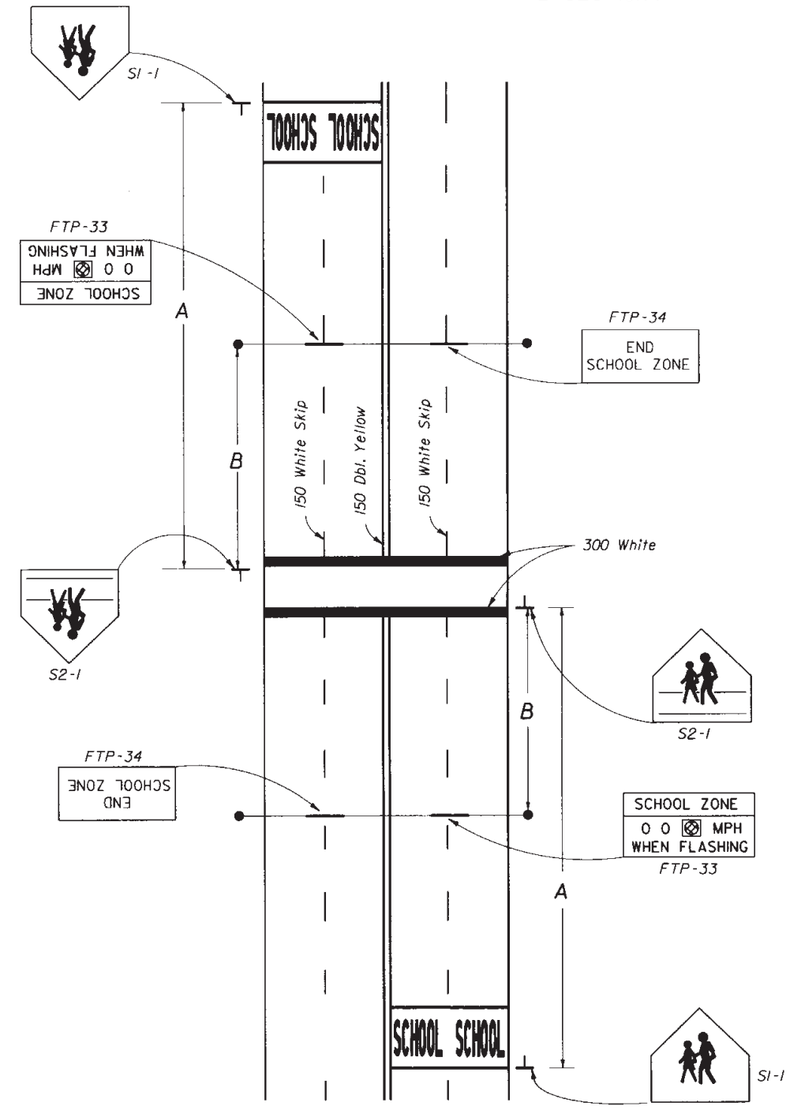

APPROACH SPEED MPH	APPROACH SPEED km/h	SUGGESTED DISTANCE IN METERS	
		A	B
25 To 35	40 To 60	60.0	15.0
36 To 45	61 To 70	105.0	20.0
46 To 55	71 To 90	150.0	24.0

School cross-walk width shall be 1.8 m min.
3.0 m std. without curb cut ramps.
3.0 m min. with curb cut ramps.
See Index No. 17346 sheet 9 of 9.

STATE OF FLORIDA DEPARTMENT OF TRANSPORTATION
TRAFFIC DESIGN

SCHOOL SIGNS & MARKINGS

	Names	Dates
Designed By		76
Drawn By		
Checked By		76
F.H.W.A. Approved:		

Approved By Charles A. Scott
State Traffic Plans Engineer

Revision No.	Sheet No.	Index No.
94	2 of 6	17344

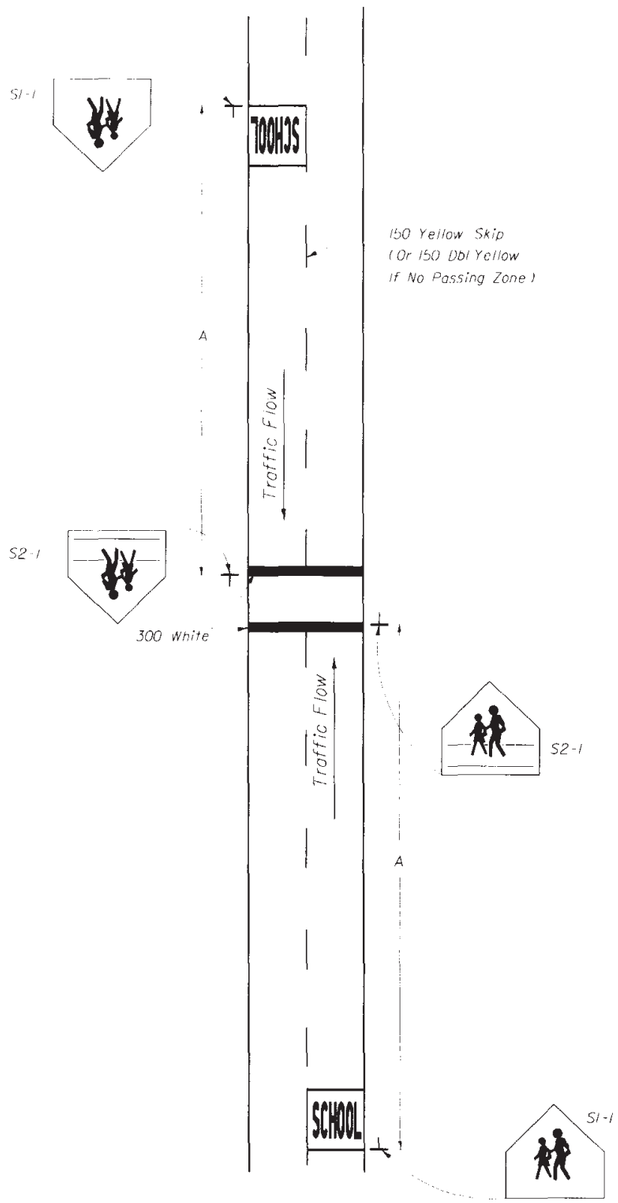

6. TRAFFIC CONTROL DEVICES FOR A SCHOOL CROSS-WALK
WITHOUT A SPEED REDUCTION
(2 LANES - 2 WAY TRAFFIC)

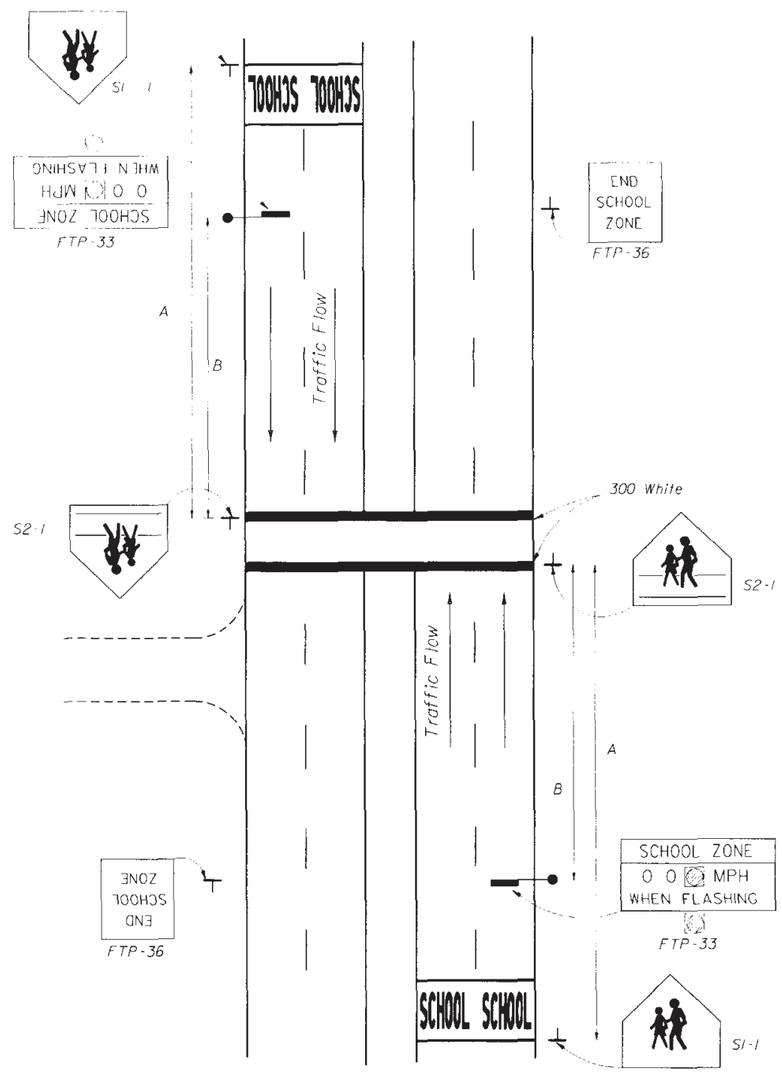

7. TRAFFIC CONTROL DEVICES FOR A REDUCED SPEED ZONE AT A SCHOOL CROSS-WALK
WITH OVERHEAD FLASHING BEACON SPEED LIMIT SIGNS
(4 LANES DIVIDED - 2 WAY TRAFFIC)

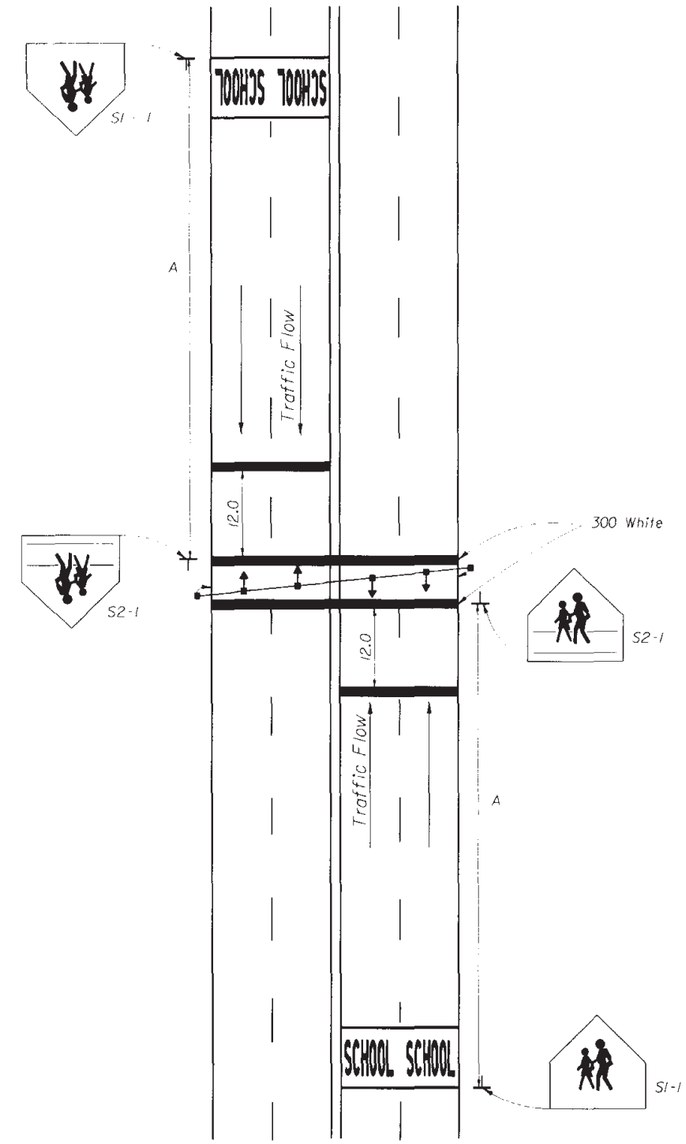

8. TRAFFIC CONTROL DEVICES FOR SIGNALIZED MIDBLOCK
SCHOOL CROSS-WALK

APPROACH SPEED MPH	APPROACH SPEED km/h	SUGGESTED DISTANCE IN METERS A	B
25 To 35	40 To 60	60.0	15.0
36 To 45	61 To 70	105.0	20.0
46 To 55	71 To 90	150.0	24.0

School cross-walk width shall be 1.8 m min.
3.0 m std. without curb cut ramps.
3.0 m min. with curb cut ramps.
See Index No. 17346 sheet 9 of 9.

STATE OF FLORIDA DEPARTMENT OF TRANSPORTATION
TRAFFIC DESIGN

SCHOOL SIGNS & MARKINGS

	Names	Dates
Designed By		07/76
Drawn By		
Checked By		07/76

Approved By: Clark A. Scott
State Traffic Plans Engineer

Revision No.	Sheet No.	Index No.
94	3 of 6	17344

F.H.W.A. Approved:

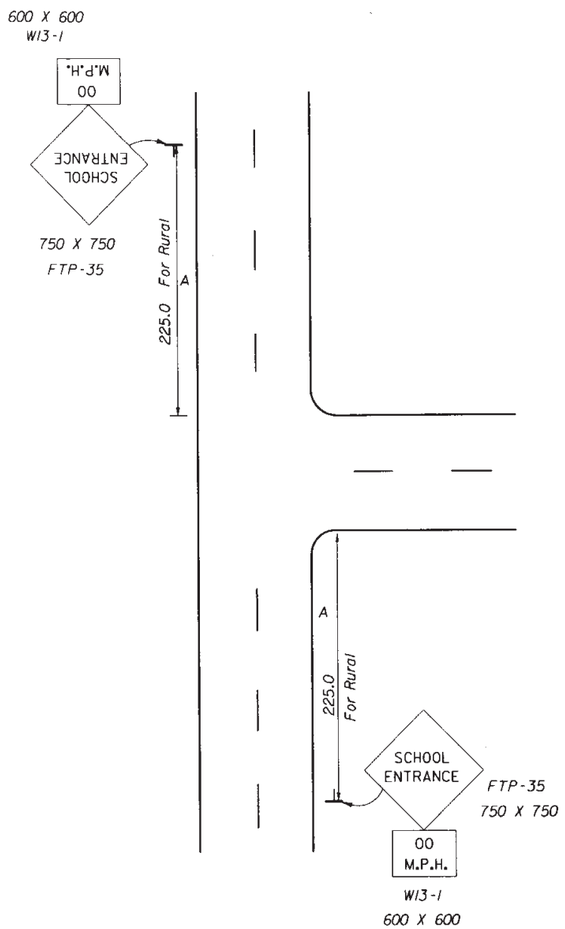

9. TRAFFIC CONTROL DEVICES AT SCHOOL ENTRANCES WHERE THERE ARE LITTLE OR NO WALKING STUDENTS

These signs are intended for use only at those few locations where the school entrance is not evident to the motorist, and must be approved in advance by the responsible traffic engineering authority.

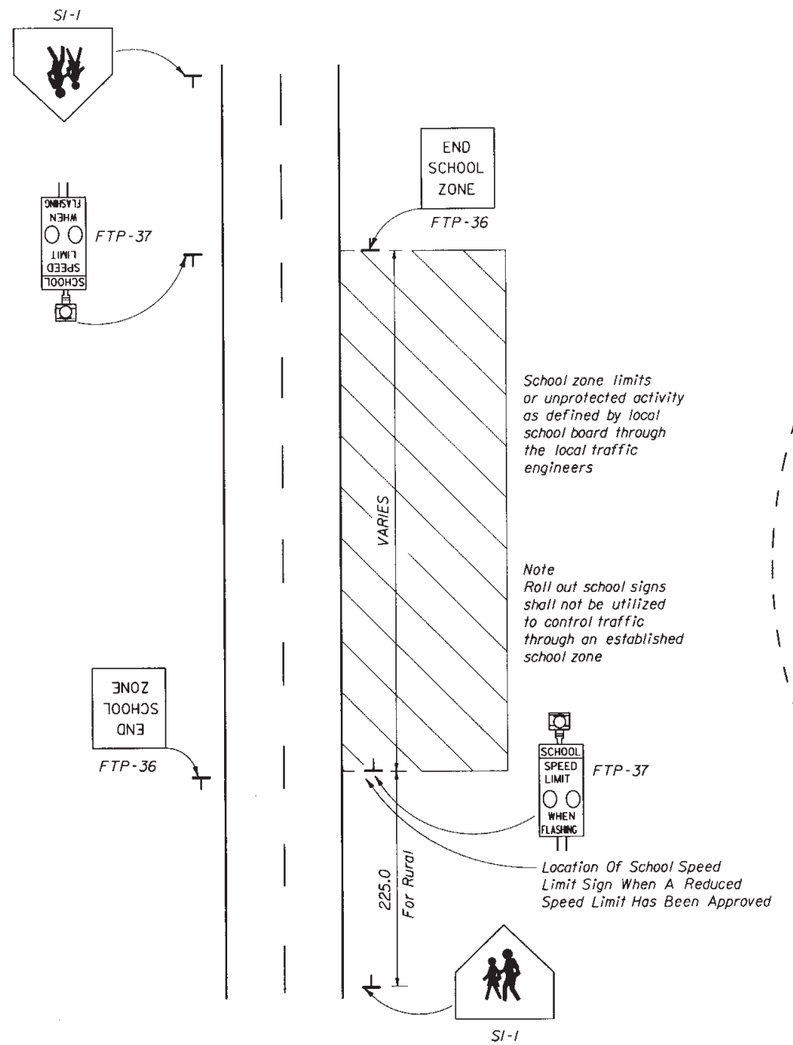

10. TRAFFIC CONTROL DEVICES FOR A TYPICAL SCHOOL ZONE FRONTING THE SCHOOL PROPERTY

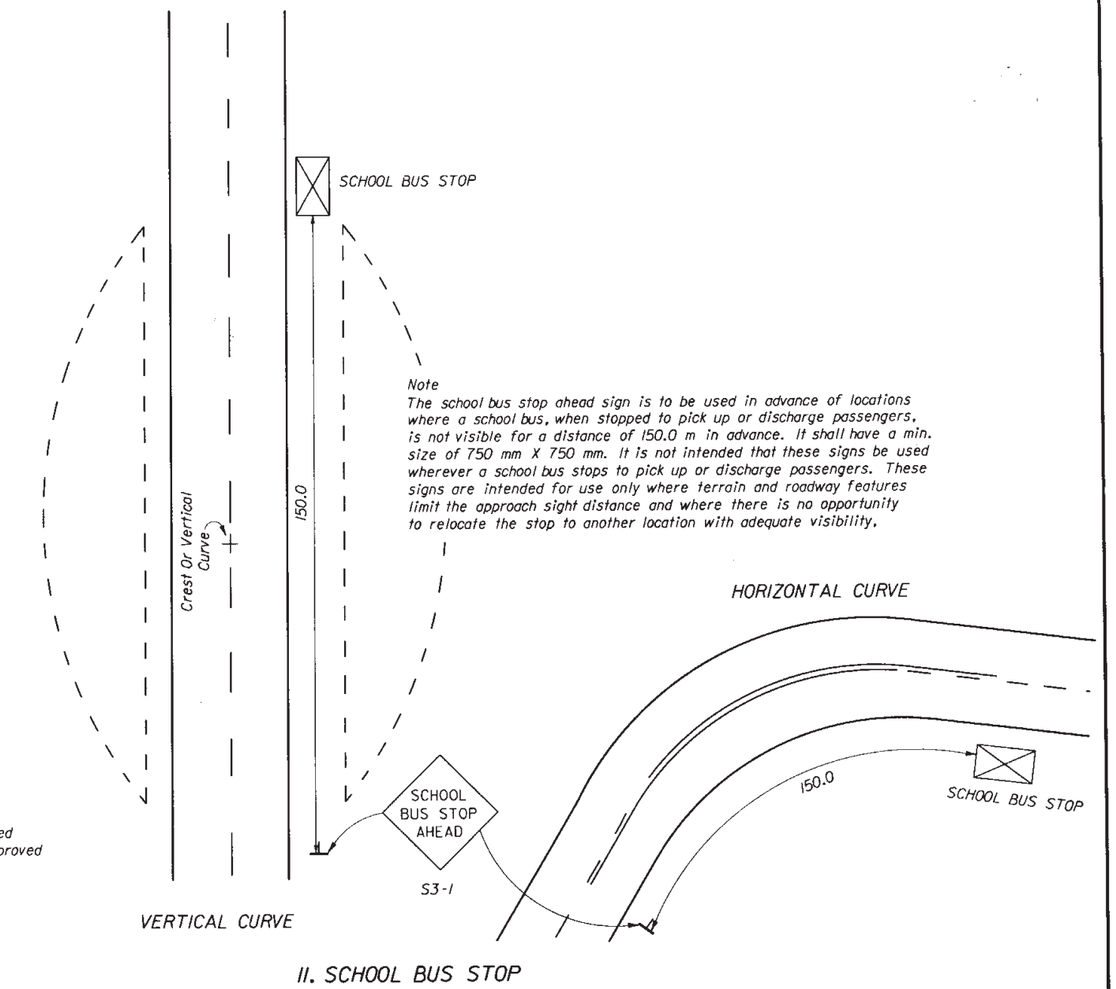

11. SCHOOL BUS STOP

STATE OF FLORIDA DEPARTMENT OF TRANSPORTATION
TRAFFIC DESIGN

SCHOOL SIGNS & MARKINGS

	Names	Dates
Designed By		07/76
Drawn By		
Checked By		07/76

Approved By: Clark A. Scott
State Traffic Plans Engineer

F.H.W.A. Approved:	Revision No.	Sheet No.	Index No.
	94	4 of 6	17344

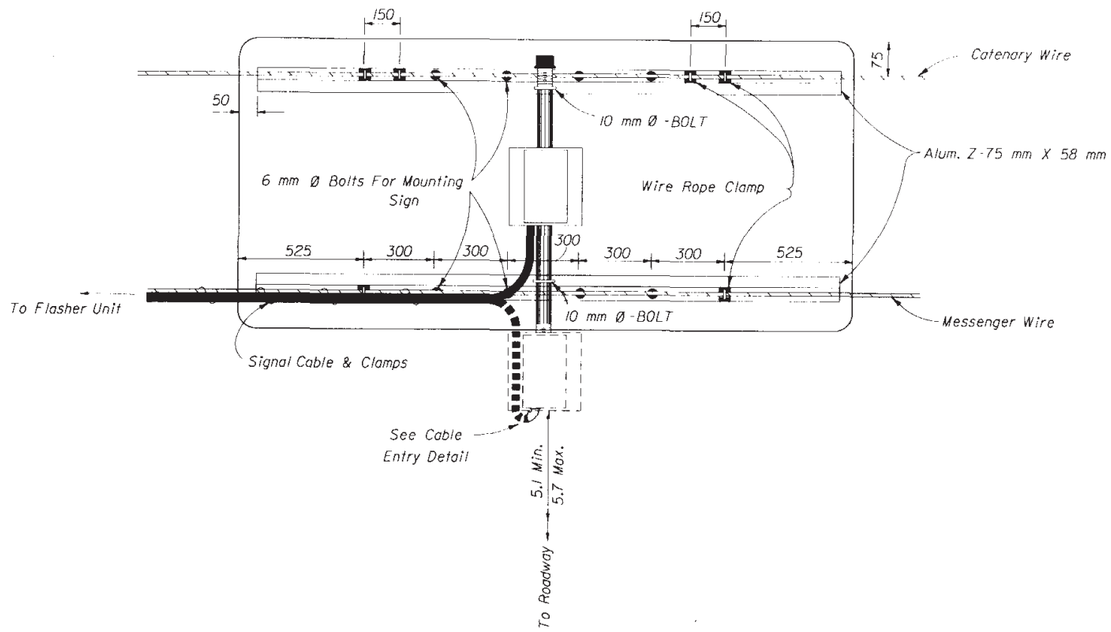

REAR VIEW

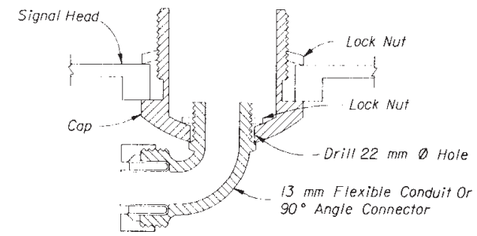

CABLE ENTRY DETAIL

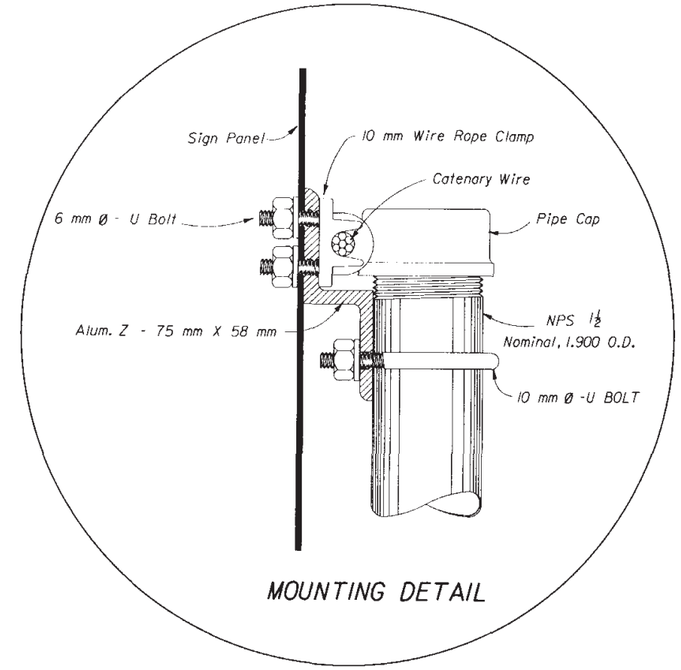

MOUNTING DETAIL

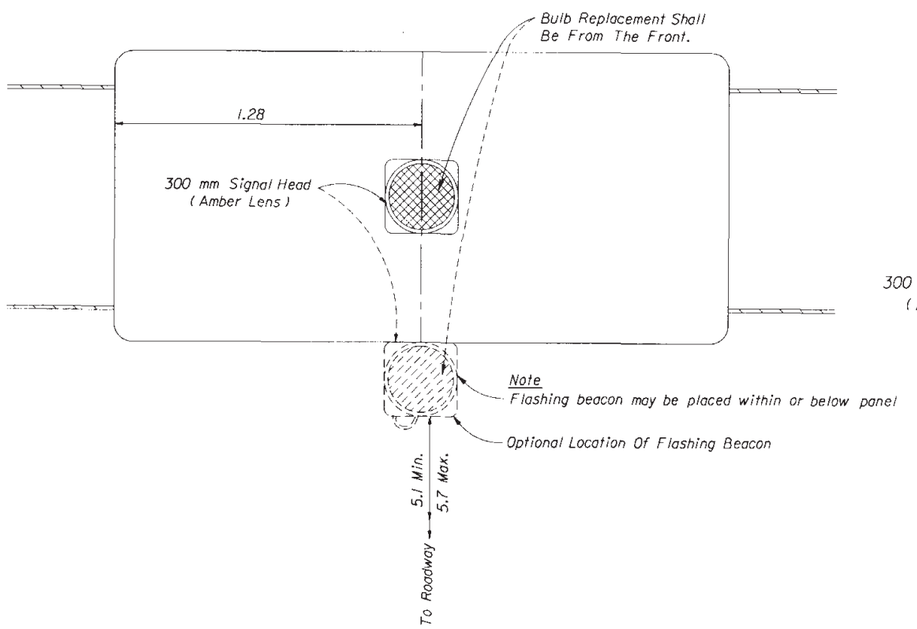

FRONT VIEW

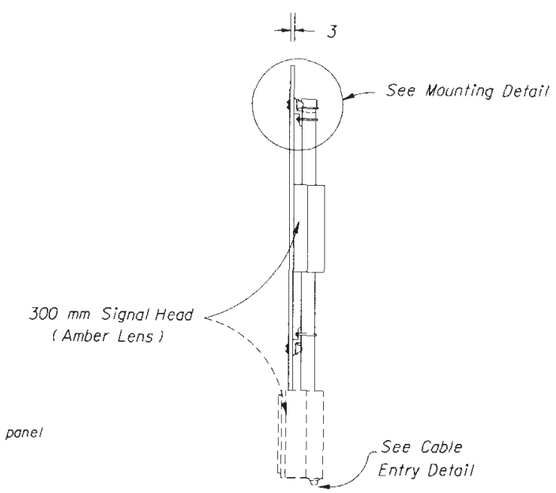

SIDE VIEW

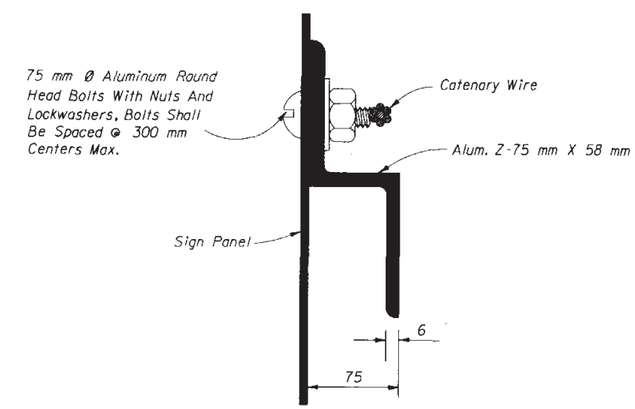

Z SECTION DETAIL

Flasher unit and cabinet to be placed on the strain pole supporting overhead sign assembly or on service pole. The flasher unit not to overhang private property or sidewalk.

STATE OF FLORIDA DEPARTMENT OF TRANSPORTATION
TRAFFIC DESIGN

SCHOOL SIGNS & MARKINGS

	Names	Dates
Designed By		
Drawn By		07/76
Checked By		07/76

Approved By Clark A. Scott
State Traffic Plans Engineer

Revision No.	Sheet No.	Index No.
94	5 of 6	17344

F.H.W.A. Approved:

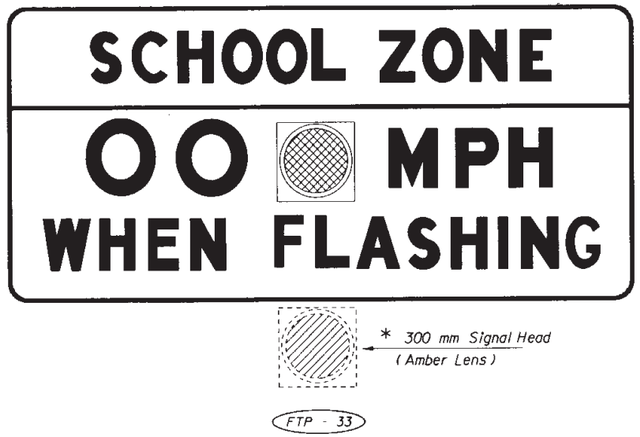

OVERHEAD STANDARD

* Flashing Beacon May Be Placed Within Or Below Panel

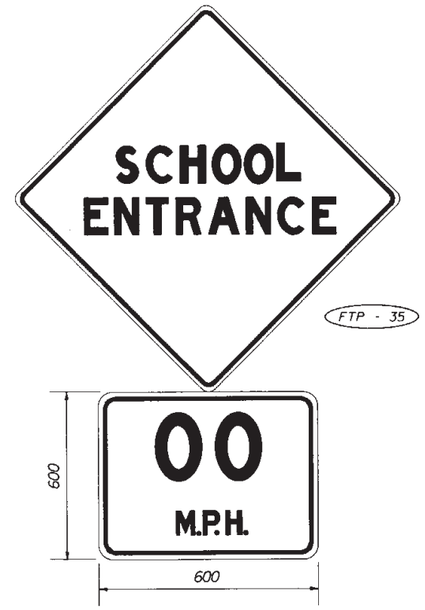

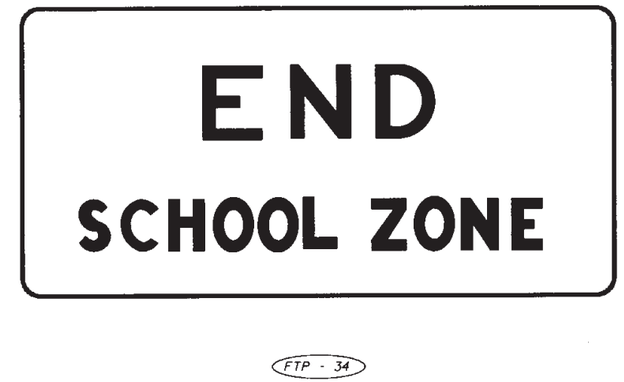

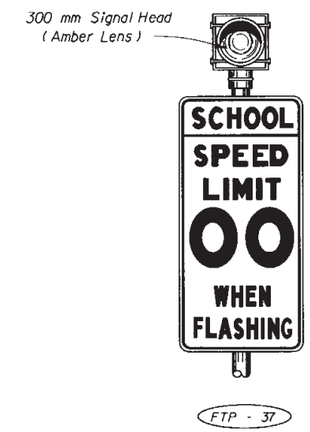

Ground Mount Standard

Note:
Existing ground mount school speed limit signs utilizing a single 200 mm min. size beacon or two 150 mm min. size beacons inside the sign border are considered meeting the standard. However, replacement or upgrading of these school speed limit signs shall conform to the above standard. Numerical speed limit displayed shall be established by appropriate regulatory authorities.

Notes:

1. Standard size signs should be used whenever possible. Minimum sizes may be used only on low volume, low speed (less than 35 m.p.h.) streets. Special sizes should be used on expressway facilities where special emphasis is needed.
2. The value of the actual school zone speed limit shall be determined by the District Traffic Operations Engineer in cooperation with local school superintendents. In no case shall it be less than the 15 m.p.h. min. as set by law.
3. See Index No. 17355 for sign details.

SPEED LIMIT ASSEMBLY

W13 - 1

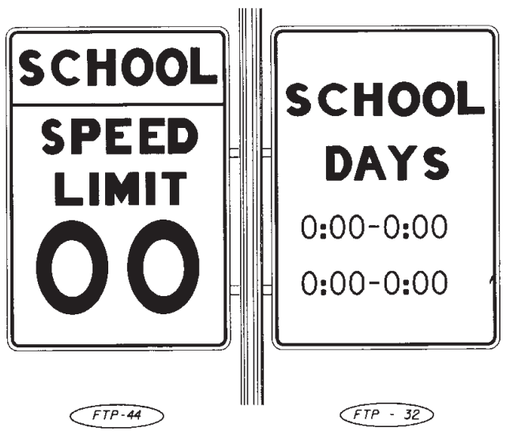

STATE OF FLORIDA DEPARTMENT OF TRANSPORTATION
TRAFFIC DESIGN

SCHOOL SIGNS & MARKINGS

	Names	Dates
Designed By		07/76
Drawn By		
Checked By		07/76

Approved By Clark A. Scott
State Traffic Plans Engineer

Revision No.	Sheet No.	Index No.
94	6 of 6	17344

F.H.W.A. Approved:

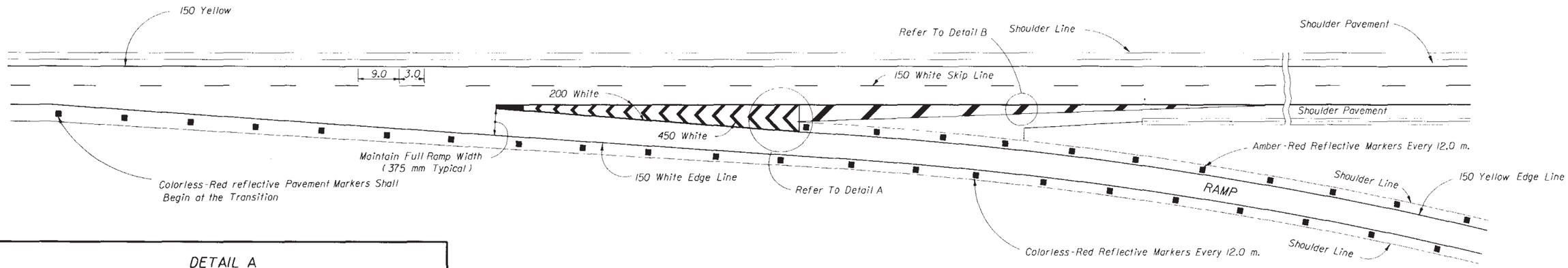

DETAIL A

For RPM Location Refer To Index 17352.

Direction Of Travel

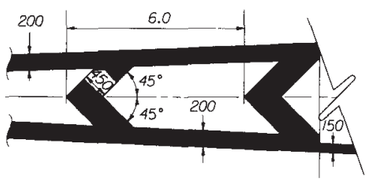

Note:
Reflective pavement markers are installed adjacent to the edge line.

NORMAL TAPERED EXIT

(TWO THRU LANES)

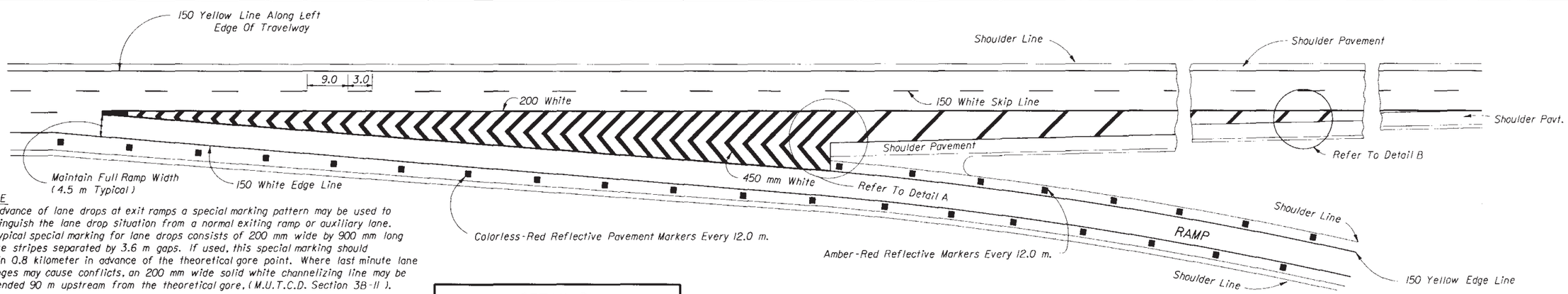

NOTE
In advance of lane drops at exit ramps a special marking pattern may be used to distinguish the lane drop situation from a normal exiting ramp or auxiliary lane. A typical special marking for lane drops consists of 200 mm wide by 900 mm long white stripes separated by 3.6 m gaps. If used, this special marking should begin 0.8 kilometer in advance of the theoretical gore point. Where last minute lane changes may cause conflicts, an 200 mm wide solid white channelizing line may be extended 90 m upstream from the theoretical gore. (M.U.T.C.D. Section 3B-11).

DETAIL B

"S"	MPH	30	35	40	45	50	55
"S"	km/h	50	60	60	70	80	90
"X"	m	6.0	6.0	12.0	12.0	18.0	18.0

Passenger Car, Daytime, Posted Speeds Or 85th Percentile (Use Higher Value)

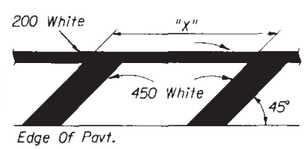

NORMAL TAPERED EXIT ONLY

(TWO THRU LANES - THREE APPROACH LANES)

STATE OF FLORIDA DEPARTMENT OF TRANSPORTATION
TRAFFIC DESIGN

INTERCHANGE MARKINGS

	Names	Dates
Designed By		78
Drawn By		78
Checked By		78

Approved By: Clark A. Scott
State Traffic Plans Engineer

Revision No.	Sheet No.	Index No.
94	1 of 4	17345

F.H.W.A. Approved:

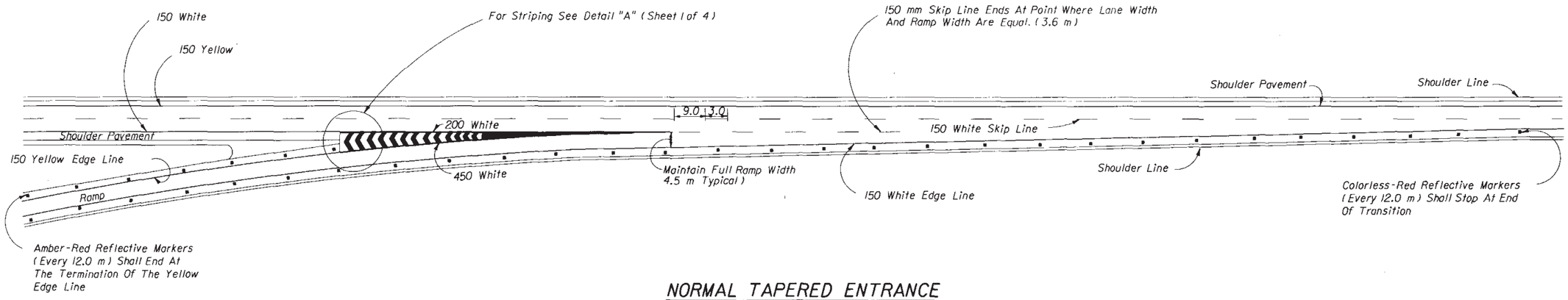

NORMAL TAPERED ENTRANCE

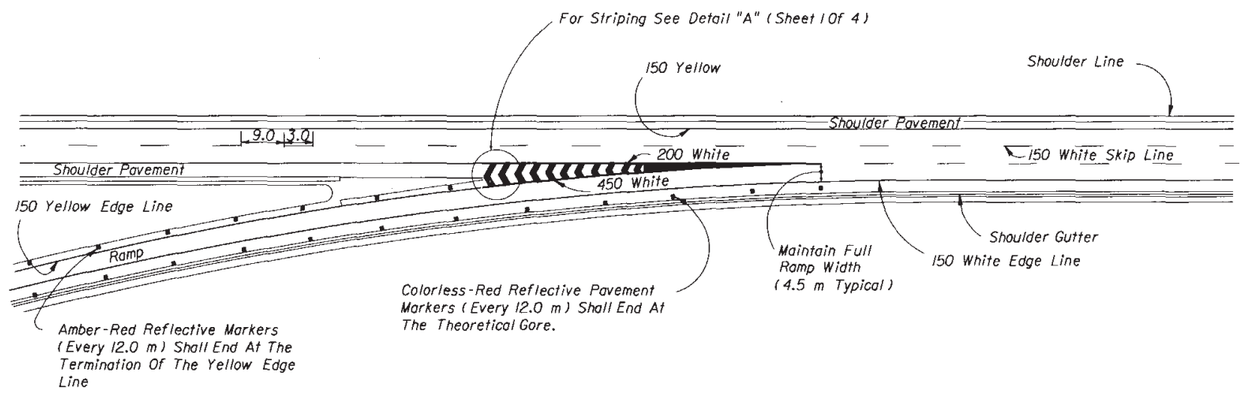

NORMAL TAPERED ENTRANCE WITH ADDED LANE

STATE OF FLORIDA DEPARTMENT OF TRANSPORTATION
TRAFFIC DESIGN

INTERCHANGE MARKINGS

	Names	Dates
Designed By		87
Drawn By		87
Checked By		87
F.H.W.A. Approved:		

Approved By Clark A. Scott
State Traffic Plans Engineer

Revision No.	Sheet No.	Index No.
94	2 of 4	17345

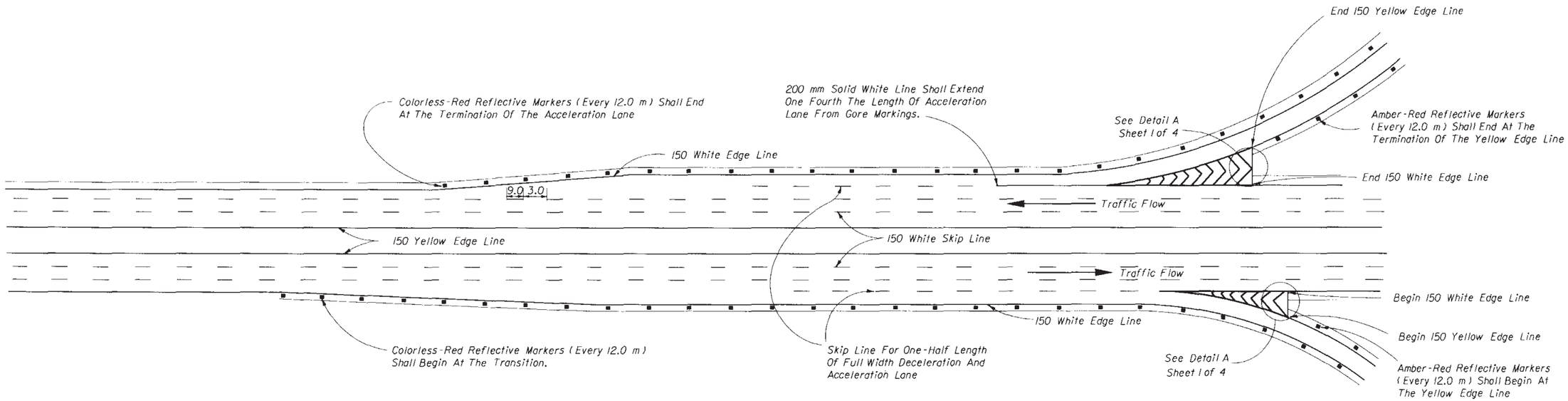

PARALLEL ACCELERATION AND DECELERATION LANE

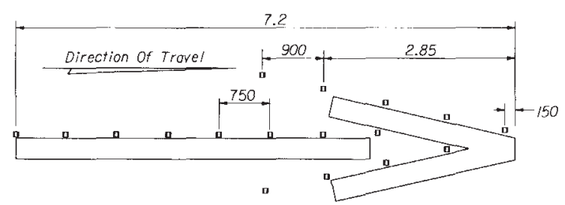

White Arrow With
Colorless-Red Reflective Markers
For Arrow details see Index No. 17346
sheet 1 of 9.

WRONG WAY ARROW

STATE OF FLORIDA DEPARTMENT OF TRANSPORTATION
TRAFFIC DESIGN

INTERCHANGE MARKINGS

	Names	Dates
Designed By		73
Drawn By		73
Checked By		73

Approved By: Clark A. Scott
State Traffic Plans Engineer

Revision No.	Sheet No.	Index No.
94	3 of 4	17345

F.H.W.A. Approved:

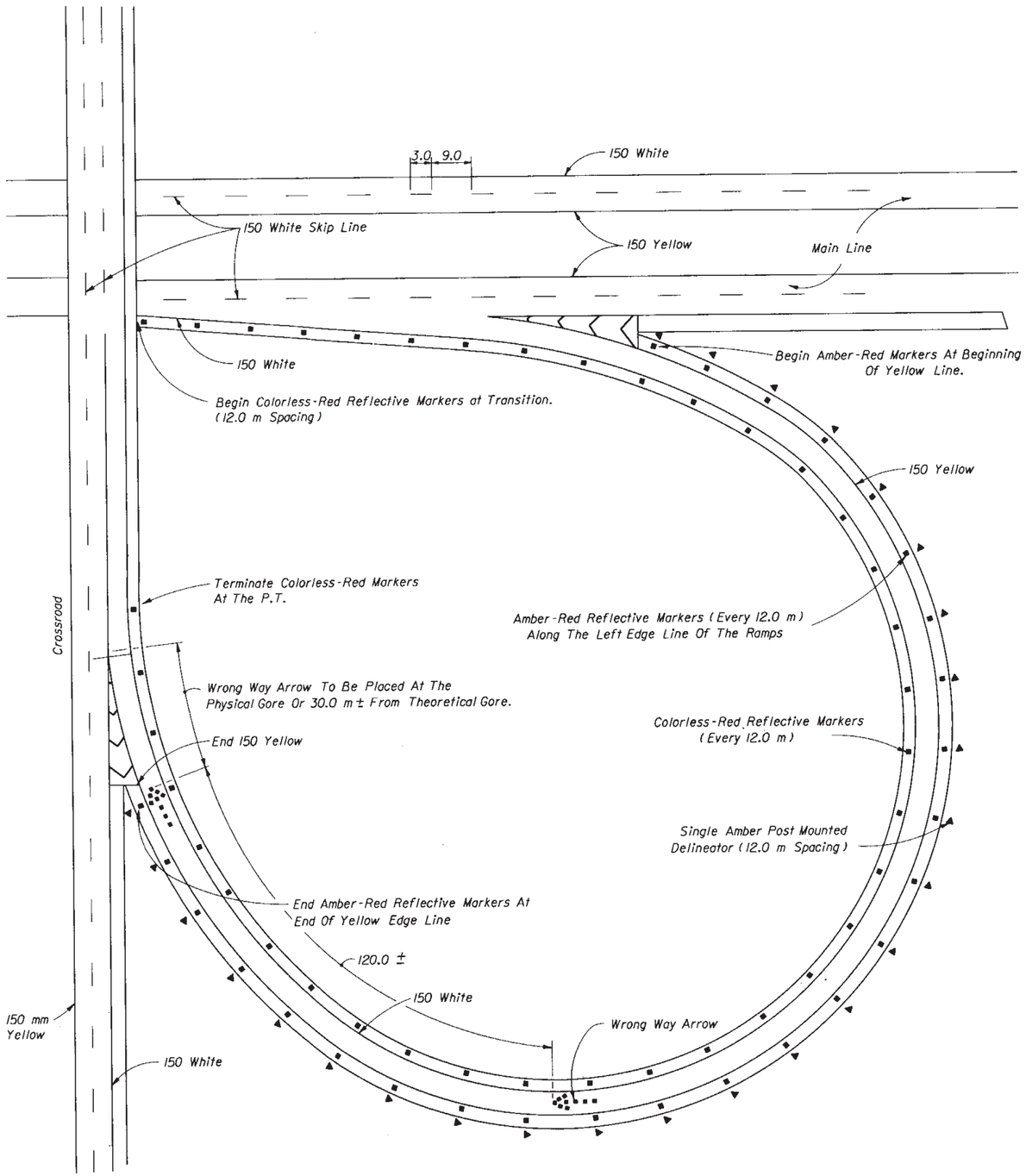

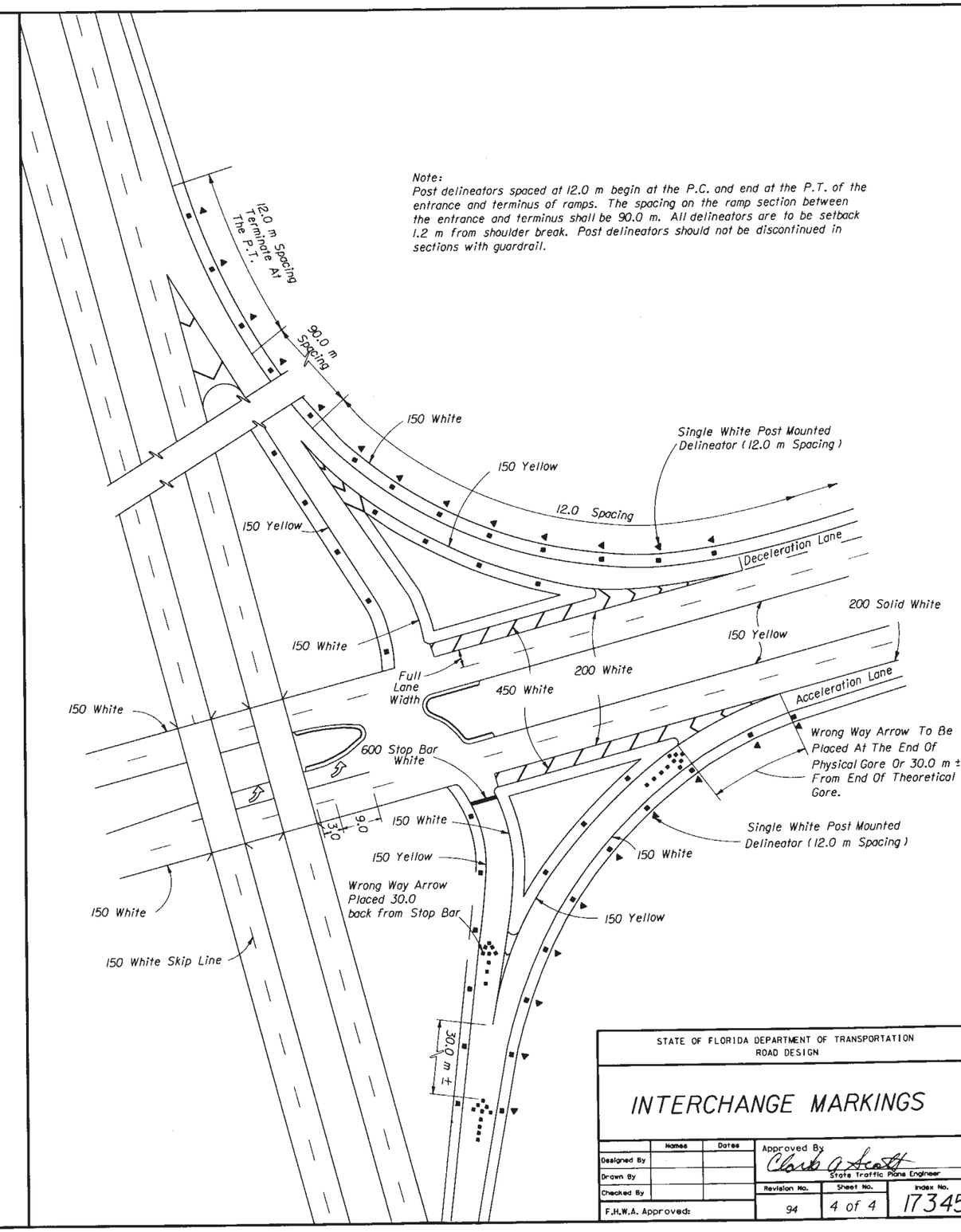

Note:
Post delineators spaced at 12.0 m begin at the P.C. and end at the P.T. of the entrance and terminus of ramps. The spacing on the ramp section between the entrance and terminus shall be 90.0 m. All delineators are to be setback 1.2 m from shoulder break. Post delineators should not be discontinued in sections with guardrail.

STATE OF FLORIDA DEPARTMENT OF TRANSPORTATION
ROAD DESIGN

INTERCHANGE MARKINGS

	Names	Dates
Designed By		
Drawn By		
Checked By		
F.H.W.A. Approved:		

Approved By Clark A. Scott
State Traffic Plans Engineer

Revision No.	Sheet No.	Index No.
94	4 of 4	17345

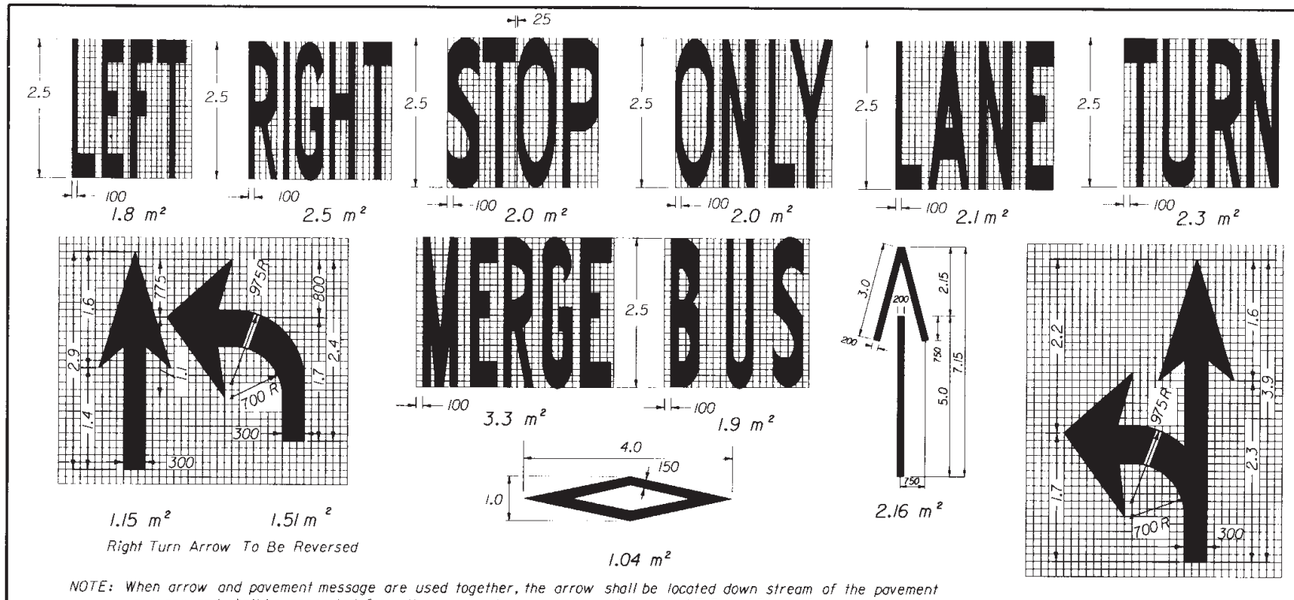

NOTE: When arrow and pavement message are used together, the arrow shall be located down stream of the pavement message and shall be separated from the pavement message by a distance of 7.5 m (Base of the arrow to the base of the message).

DIMENSIONS ARE WITHIN 25 mm ±

PAVEMENT ARROW AND MESSAGE DETAILS

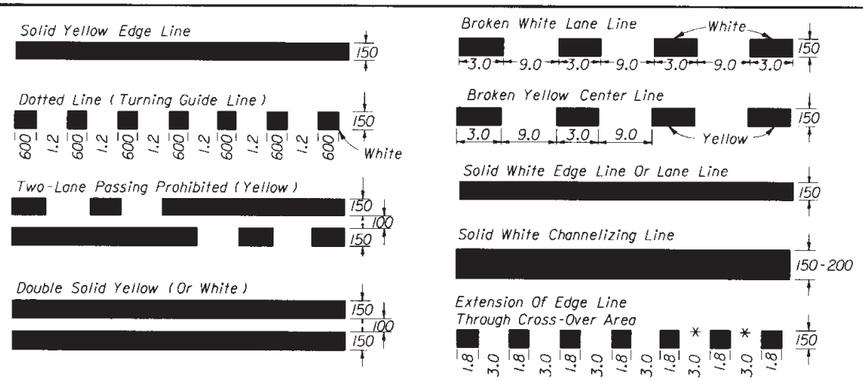

BASIC COLOR RULE

White lines separate traffic in the same direction.
Yellow lines separate traffic in opposing directions.
Yellow dotted lines may be used in special cases.

TYPES OF PERMANENT LONGITUDINAL LINES

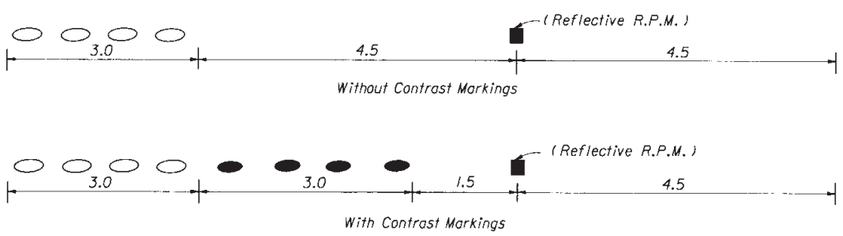

NOTE: Ceramic Markers should not be installed unless specifically called for in the plans. Use is limited to high volume sections with ADT's greater than 50,000 where lane changing is to be discouraged or other areas where channelization is required.

NON-REFLECTIVE CERAMIC PAVEMENT MARKER PLACEMENT

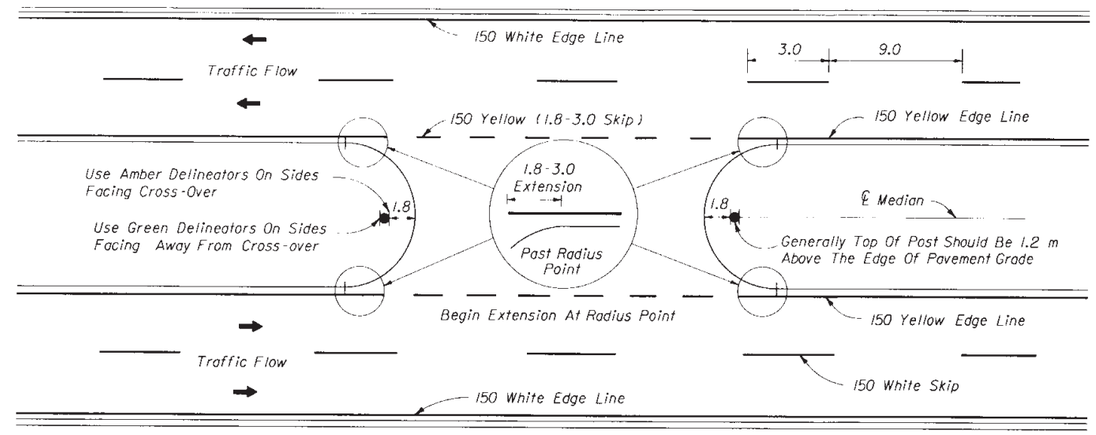

PAVEMENT MARKINGS AND DELINEATORS FOR MEDIAN CROSS-OVER

NOTE:

Markings applied to median noses shall be yellow in color.

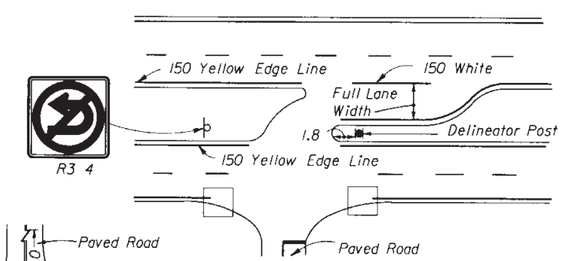

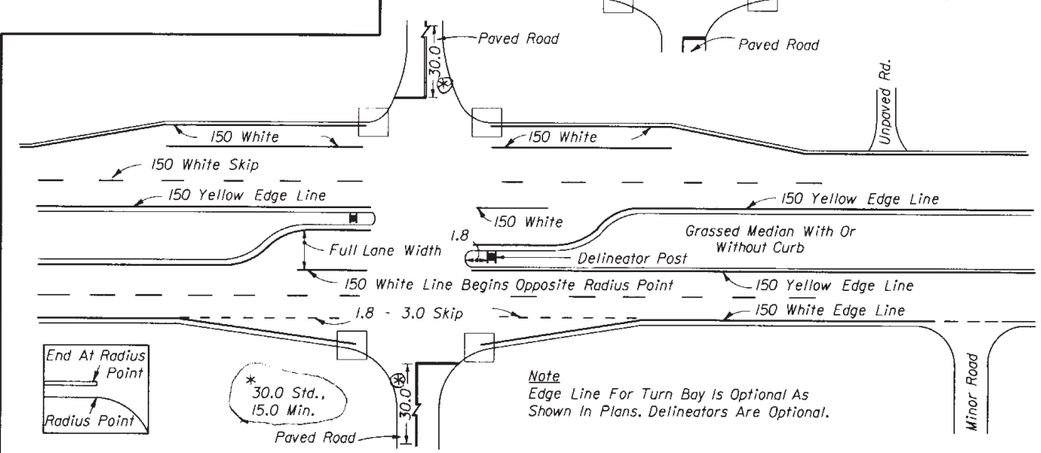

PAVEMENT MARKINGS FOR INTERSECTIONS WITH MAJOR AND MINOR ROADS

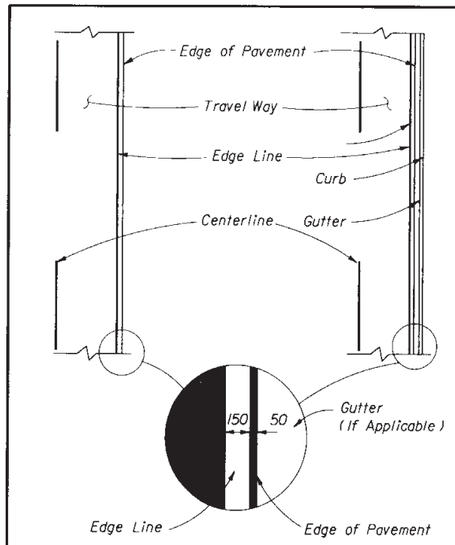

PLACEMENT OF EDGE LINES

STATE OF FLORIDA DEPARTMENT OF TRANSPORTATION
TRAFFIC DESIGN

SPECIAL MARKING AREAS

	Names	Dates	Approved By: Clark A. Scott, State Traffic Plans Engineer
Designed By		08/16/78	
Drawn By			
Checked By		08/16/78	
F.H.W.A. Approved:			Revision No. 94 · Sheet No. 1 of 9 · Index No. 17346

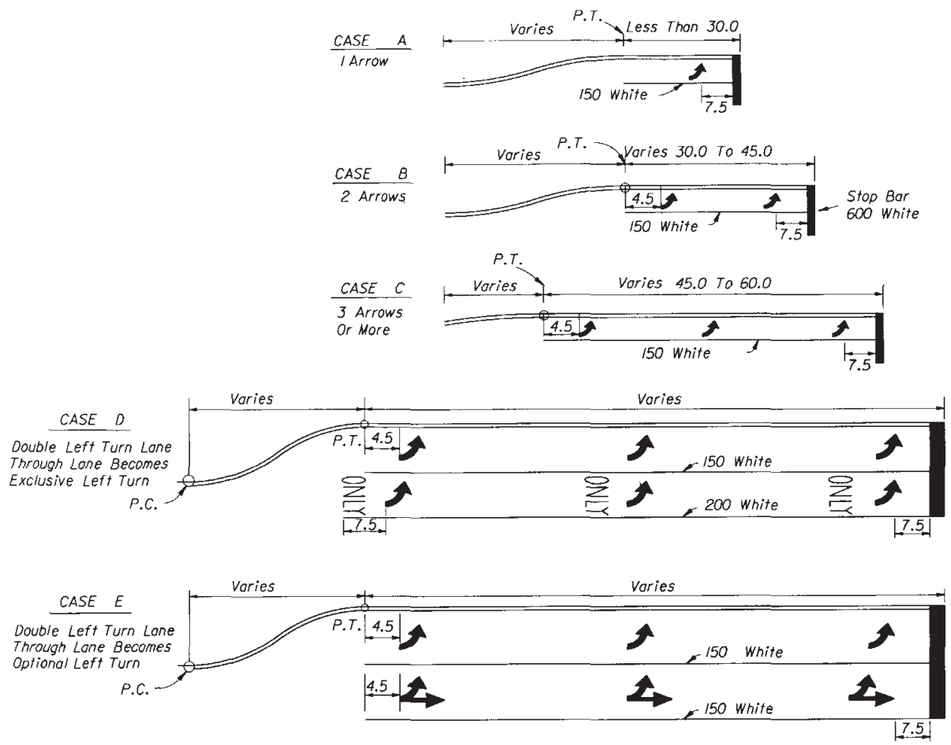

NOTE:

Yellow left turn edge marking may be used adjacent to raised curb or grass medians if lane use is not readily apparent to drivers approaching a left turn storage lane.

Turn lanes longer than 60.0 m add one arrow for each 30.0 m additional length.

Arrows Should Be Evenly Spaced Between First And Last Arrow

Pavement message ONLY is not required for created (shadowed) turn lanes, single or dual, where the driver must exit the thru lane to enter a turn lane.

(STOP CONTROLLED OR SIGNALIZED INTERSECTIONS)

PAINTED LEFT TURN STORAGE LANE(S) DETAILS

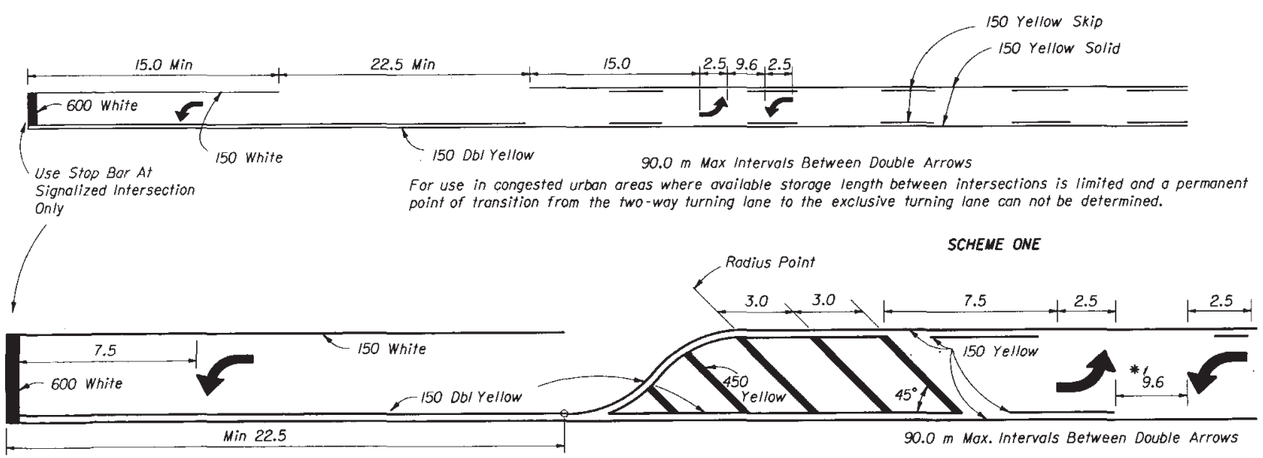

(WITH SINGLE LANE LEFT TURN CHANNELIZATION)

TWO WAY LEFT TURN LANE

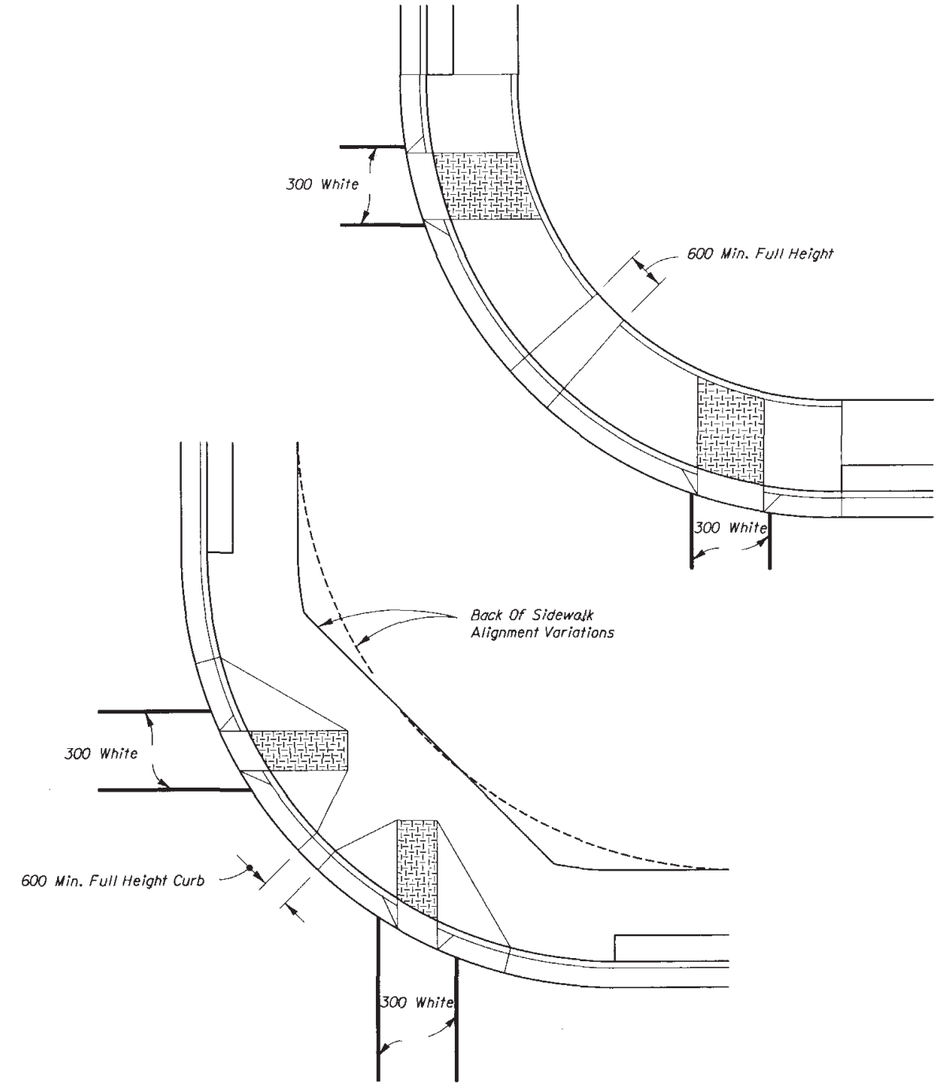

REFER TO INDEX NO. 17346 SHEET 9 OF 9.

TYPICAL CROSSWALK MARKINGS FOR CURB CUT RAMPS

STATE OF FLORIDA DEPARTMENT OF TRANSPORTATION
TRAFFIC DESIGN

SPECIAL MARKING AREAS

	Names	Dates
Designed By		76
Drawn By		76
Checked By		76

Approved By Clark A. Scott
State Traffic Plans Engineer

Revision No.	Sheet No.	Index No.
94	2 of 9	17346

F.H.W.A. Approved:

30.0 Minimum or as determined by $L = \frac{WS}{1.6}$

$(L = \frac{WS^2}{150} < 70$ Km/h) where

W is the lateral offset in meters and S is the 85th percentile speed in kilometers per hour (speed limit)

English to Metric Speed Conversion	
MPH	km/h
65	110
60	100
55	90
50	80
45	70
40	60
35	60
30	50

For left turn storage lane detail see drawing 2 of 9 of this index.

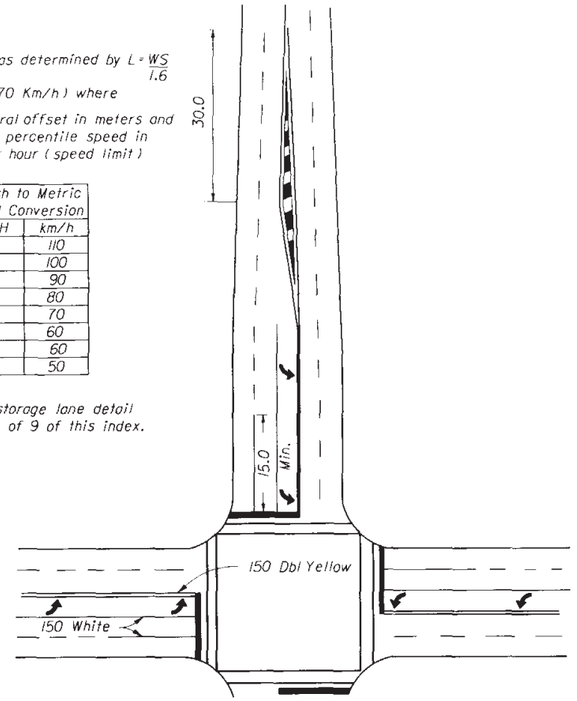

TYPICAL INTERSECTION 2 THRU LANES PLUS LEFT TURN LANE, WITH CROSSWALK

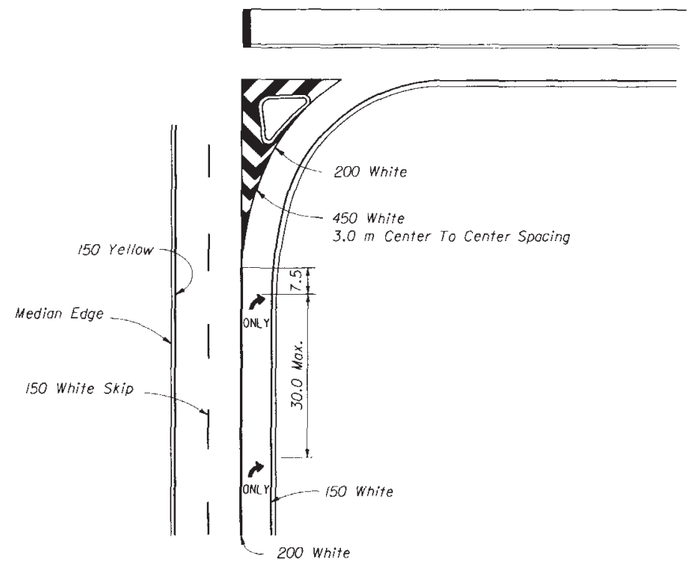

RIGHT TURN LANE DROP AND ISLAND DETAILS
LEFT TURN LANE DROP IS MIRROR IMAGE

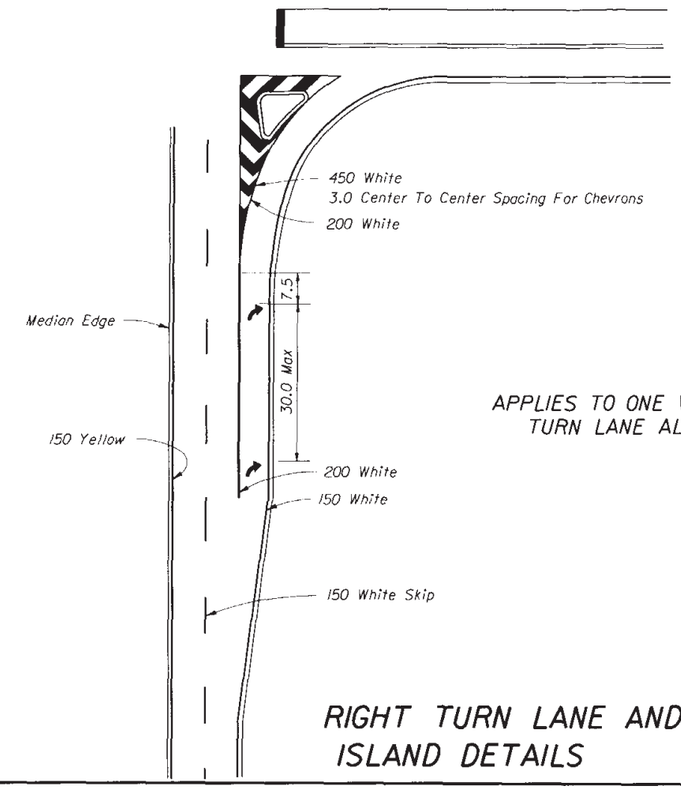

APPLIES TO ONE WAY LEFT TURN LANE ALSO

RIGHT TURN LANE AND ISLAND DETAILS

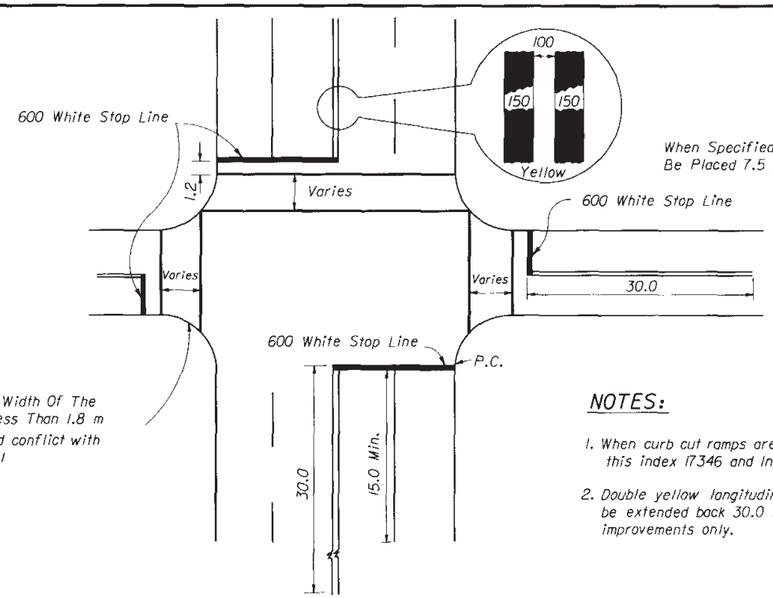

When Specified, "Stop" Message Shall Be Placed 7.5 m Back Of Stop Lines.

Width Of Crosswalk To Equal Width Of The Adjacent Sidewalk, But Not Less Than 1.8 m

Crosswalk locations shall avoid conflict with drainage inlets when practical

NOTES:

1. When curb cut ramps are present, refer to sheet 2 of 9 & 7 of 9 of this index 17346 and Index No. 304 sheet 1 of 2 for crosswalk widths.
2. Double yellow longitudinal center lines on all roadway approaches shall be extended back 30.0 m for projects involving intersection improvements only.

STOP BARS, CROSSWALKS AND DOUBLE CENTER LINE DETAILS

STATE OF FLORIDA DEPARTMENT OF TRANSPORTATION
TRAFFIC DESIGN

SPECIAL MARKING AREAS

	Names	Dates
Designed By		76
Drawn By		76
Checked By		76

Approved By Clark A Scott
State Traffic Plans Engineer

Revision No.	Sheet No.	Index No.
94	3 of 9	17346

F.H.W.A. Approved:

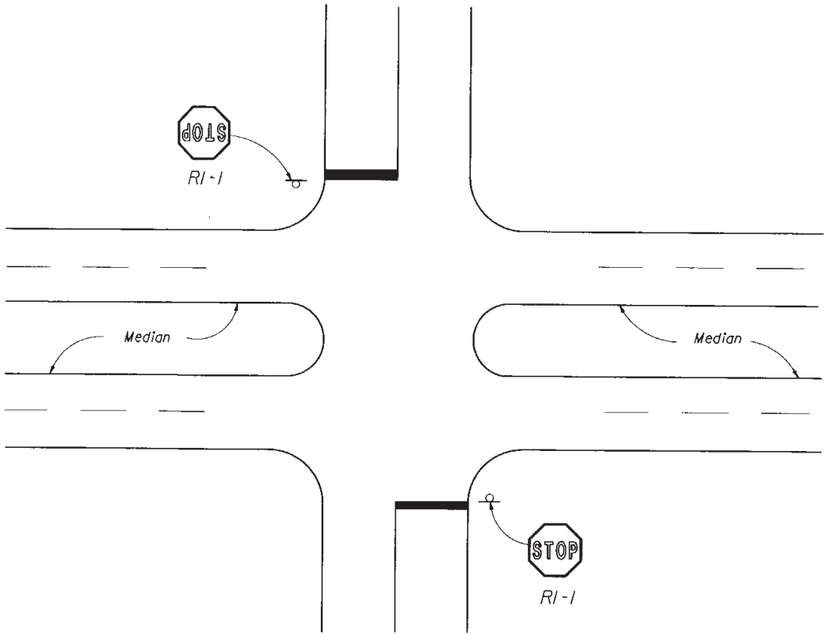

FIGURE 1

MEDIAN WIDTHS UNDER 9.0 m

ONE-WAY SIGNS ON DIVIDED HIGHWAY INTERSECTIONS

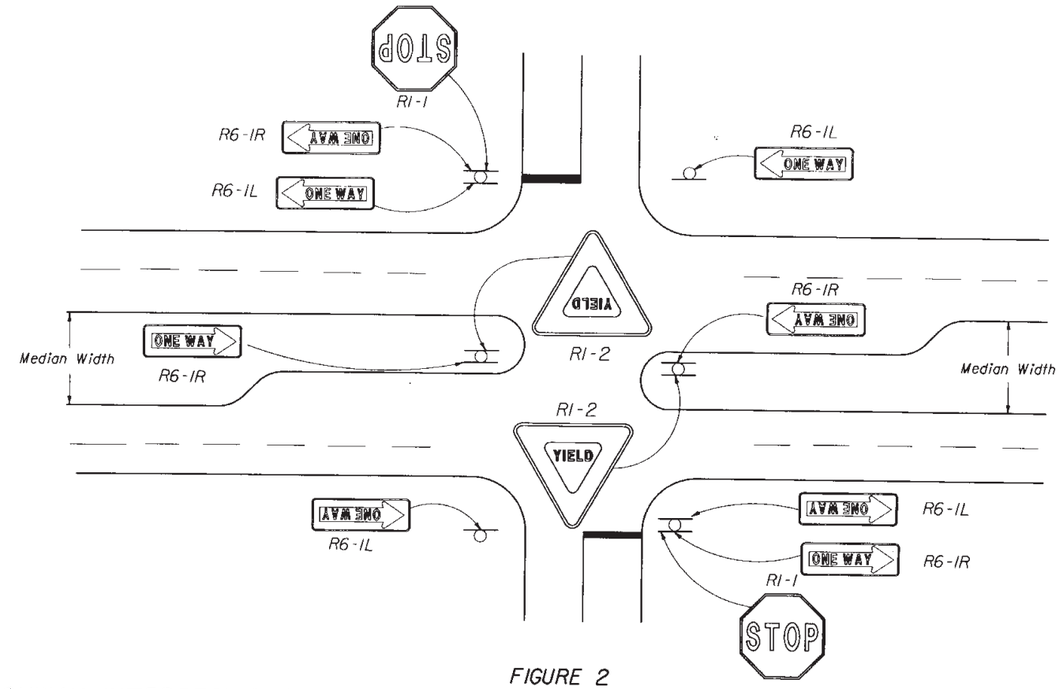

FIGURE 2

MEDIAN WIDTHS 9.0 m AND GREATER

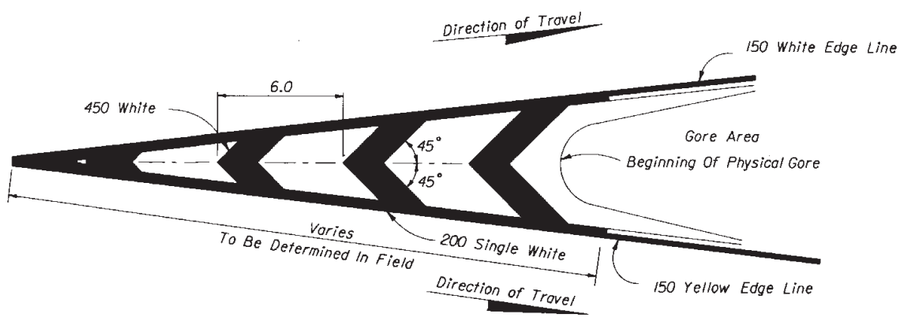

PAVEMENT MARKINGS FOR TRAFFIC CHANNELIZATION AT GORE

(TRAFFIC FLOWS IN SAME DIRECTION)

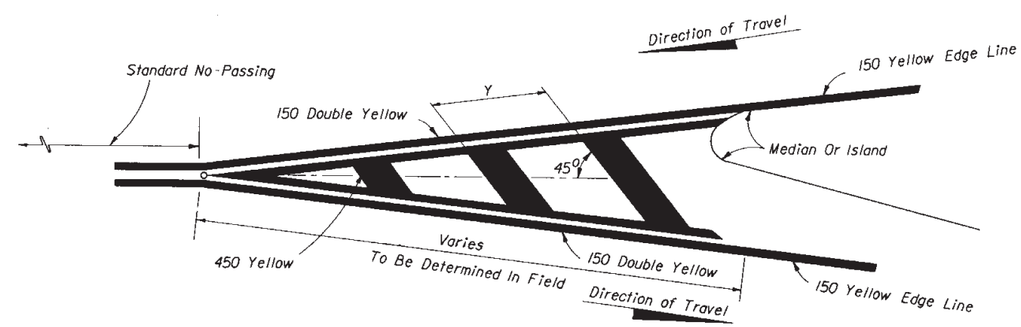

PAVEMENT MARKING FOR TRAFFIC SEPARATION

(TRAFFIC FLOWS IN OPPOSITE DIRECTION)

POSTED (DAY) SPEED LIMIT M.P.H.	SPEED LIMIT km/h	"Y" m
30 OR LESS	50 OR LESS	3.0
35	60	6.0
40	60	6.0
45	70	9.0
50 OR MORE	80 OR MORE	12.0

STATE OF FLORIDA DEPARTMENT OF TRANSPORTATION
TRAFFIC DESIGN

SPECIAL MARKING AREAS

	Names	Dates
Designed By		78
Drawn By		78
Checked By		78

Approved By Clark A. Scott
State Traffic Plans Engineer

Revision No.	Sheet No.	Index No.
94	4 of 9	17346

F.H.W.A. Approved:

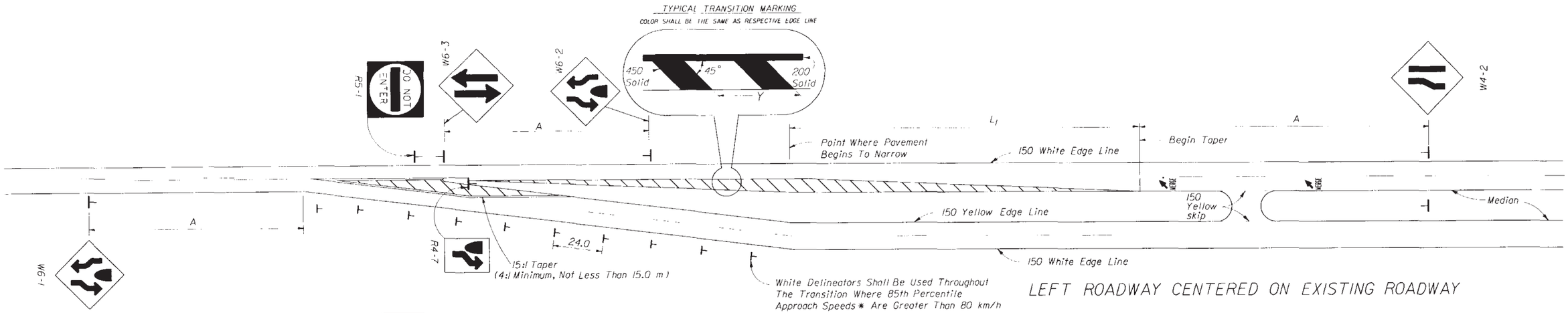

LEFT ROADWAY CENTERED ON EXISTING ROADWAY

TRANSITION DISTANCE L_1

*S MPH \ **W	*S km/h \ **W	2.4	2.7	3.0	3.3	3.6	3.9	4.2
30	50	40.0	45.0	50.0	55.0	60.0	65.0	70.0
35	60	60.0	65.0	75.0	80.0	90.0	95.0	105.0
40	60	60.0	65.0	75.0	80.0	90.0	95.0	105.0
45	70	105.0	120.0	135.0	145.0	160.0	175.0	105.0
50	80	120.0	135.0	150.0	165.0	180.0	195.0	210.0
55	90	135.0	155.0	170.0	190.0	205.0	220.0	240.0
60	100	150.0	170.0	190.0	210.0	225.0	245.0	265.0
65	110	165.0	185.0	210.0	230.0	250.0	270.0	290.0

$L_1 = \frac{WS}{1.6}$

$(L_1 = \frac{WS^2}{150} < 70$ km/h)

* Passenger car, daytime, posted speeds or 85th. percentile (Use higher value)

** Lateral offset

English to Metric Speed Conversion

MPH	km/h
65	110
60	100
55	90
50	80
45	70
40	60
35	60
30	50

SPEED* (MPH)	SPEED* (km/h.)	"A" (m)
55	90	210.0
50	80	190.0
45	70	165.0
40	60	145.0
35	50	100.0

* Passenger car, daytime, posted speeds or 85th percentile (Use Higher Value)

POSTED (DAY) SPEED LIMIT MPH	POSTED (DAY) SPEED LIMIT km/h	"Y" (m)
30 OR LESS	50 OR LESS	3.0
35	60	6.0
40	60	6.0
45	70	9.0
50 OR MORE	80 OR MORE	12.0

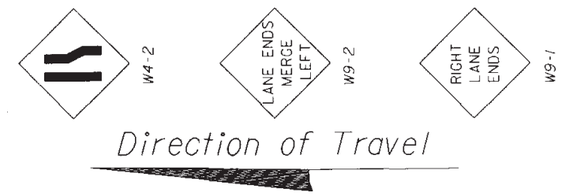

NOTE:

W9-1 & W9-2 are supplemental to the W4-2 sign and may be deleted if space is restricted. The W9-1 should be used if only one supplemental sign is installed.

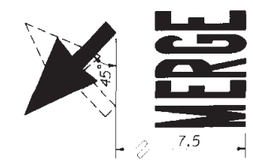

PAVEMENT MARKING DETAIL

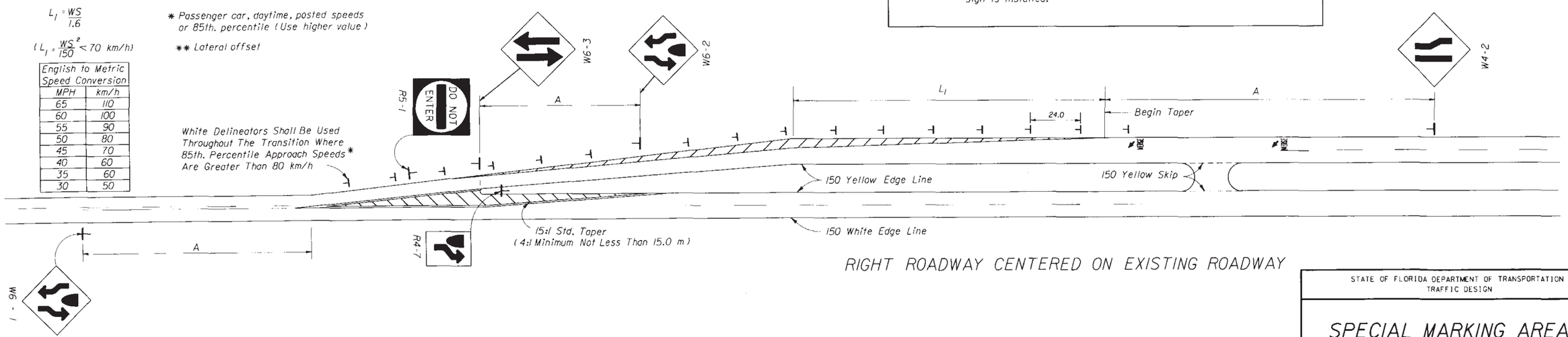

RIGHT ROADWAY CENTERED ON EXISTING ROADWAY

SCHEMES FOR TRANSITION - 2 LANE / 4 LANE ROADWAY

STATE OF FLORIDA DEPARTMENT OF TRANSPORTATION
TRAFFIC DESIGN

SPECIAL MARKING AREAS

	Names	Dates
Designed By		78
Drawn By		78
Checked By		78
F.H.W.A. Approved:		

Approved By Charles G. Scott
State Traffic Plans Engineer

Revision No.	Sheet No.	Index No.
94	5 of 9	17346

/usr9/proj/stds/94met/17346s05.dgn
Tue Oct 4 10:34:43 1994

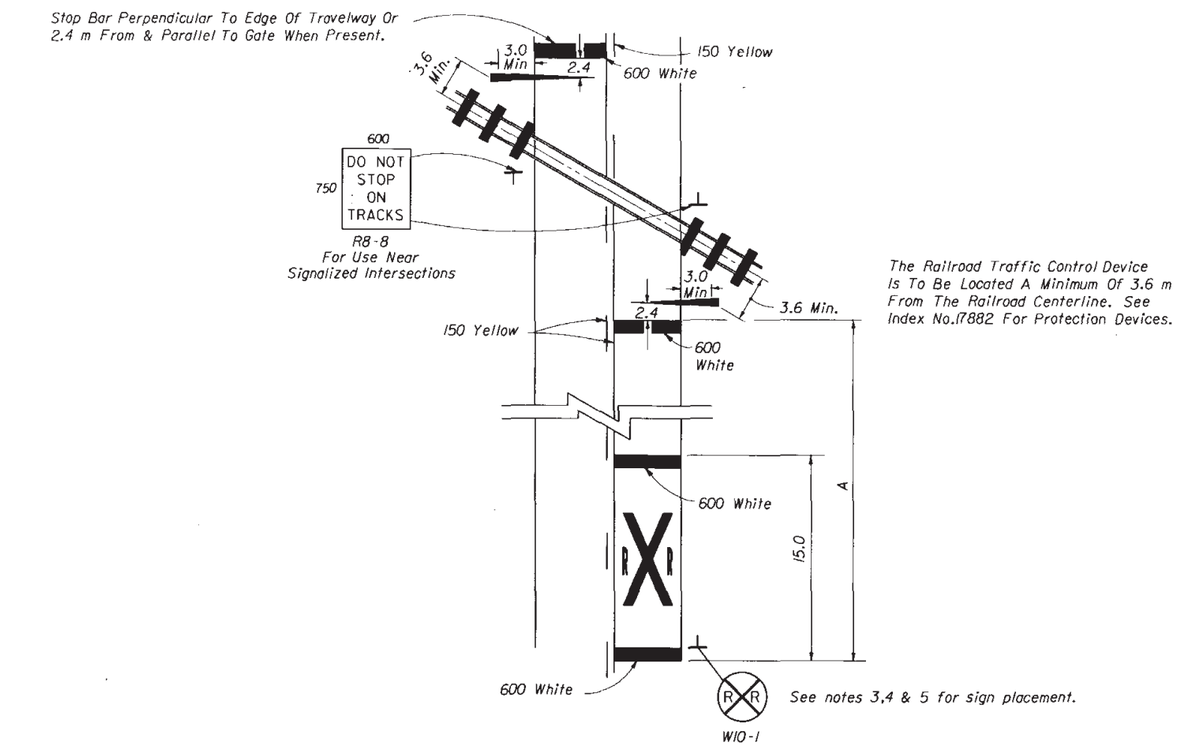

The Railroad Traffic Control Device Is To Be Located A Minimum Of 3.6 m From The Railroad Centerline. See Index No.17882 For Protection Devices.

RAILROAD CROSSING AT 2-LANE ROADWAY

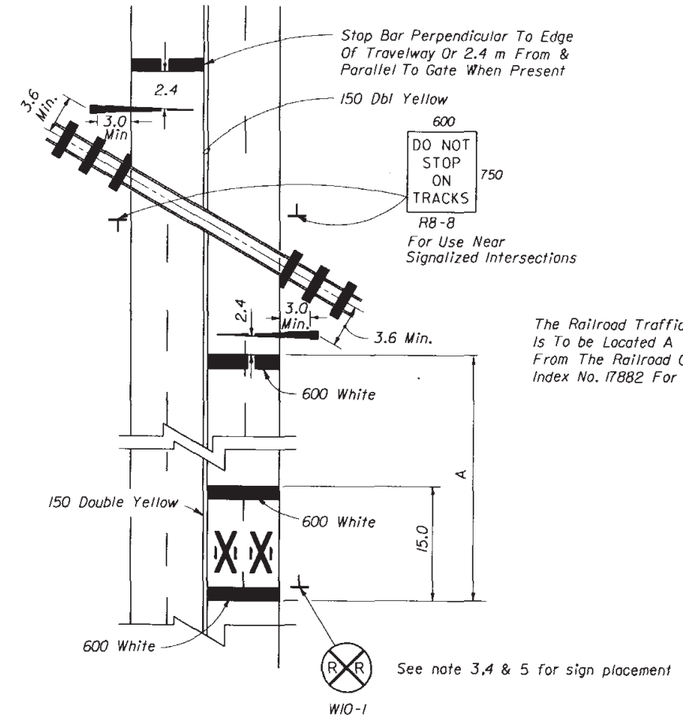

The Railroad Traffic Control Device Is To be Located A Minimum Of 3.6 m From The Railroad Centerline. See Index No. 17882 For Protection Devices.

RAILROAD CROSSING AT 4-LANE ROADWAY

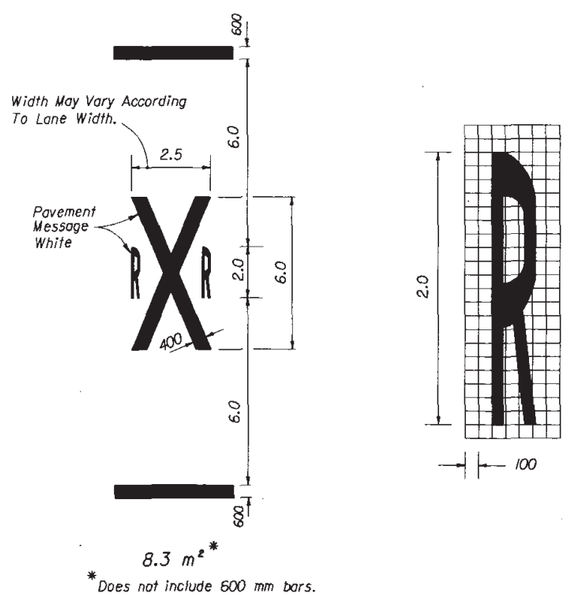

*Does not include 600 mm bars.

TYPICAL PAVEMENT MARKINGS FOR R/R CROSSING

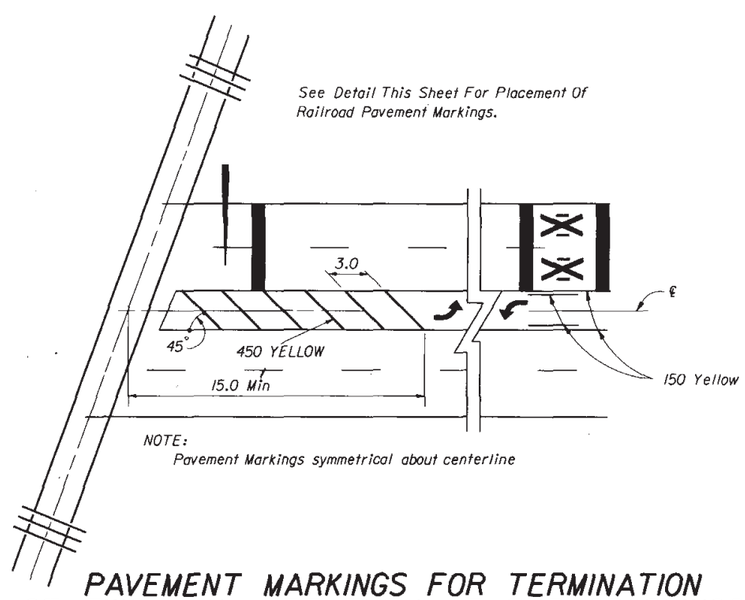

NOTE:
Pavement Markings symmetrical about centerline

PAVEMENT MARKINGS FOR TERMINATION OF TWO WAY LEFT TURN AT R/R CROSSINGS

NOTES:

1. When computing pavement messages, quantities do not include transverse lines.
2. When dynamic devices are not present or are to be installed, the crossbuck shall be located at the future location of the RR gate or signal and gate in accordance with Index No. 17882.
3. Placement of sign W10-1 in a residential or business district, where low speeds are prevalent, the W10-1 sign may be placed a minimum distance of 30.0 m from the crossing. Where street intersections occur between the RR pavement message and the tracks an additional W10-1 sign & additional pavement message should be used.
4. Recommended location for FTP-38 or FTP 38B sign, 30.0 m urban & 90.0 m rural in advanced of the crossing.
5. A portion of the pavement marking symbol should be directly opposite the W10-1 sign.

SPEED MPH	SPEED km/h	A (m)
60	100	165.0
55	90	135.0
50	80	112.5
45	70	90.0
40	60	67.5
35	60	45.0
30	50	30.0
Urban	Urban	15.0 Min.

STATE OF FLORIDA DEPARTMENT OF TRANSPORTATION
TRAFFIC DESIGN

SPECIAL MARKING AREAS

	Names	Dates
Designed By		76
Drawn By		76
Checked By		76

Approved By Clark A. Scott
State Traffic Plans Engineer

F.H.W.A. Approved:

Revision No.	Sheet No.	Index No.
94	6 of 9	17346

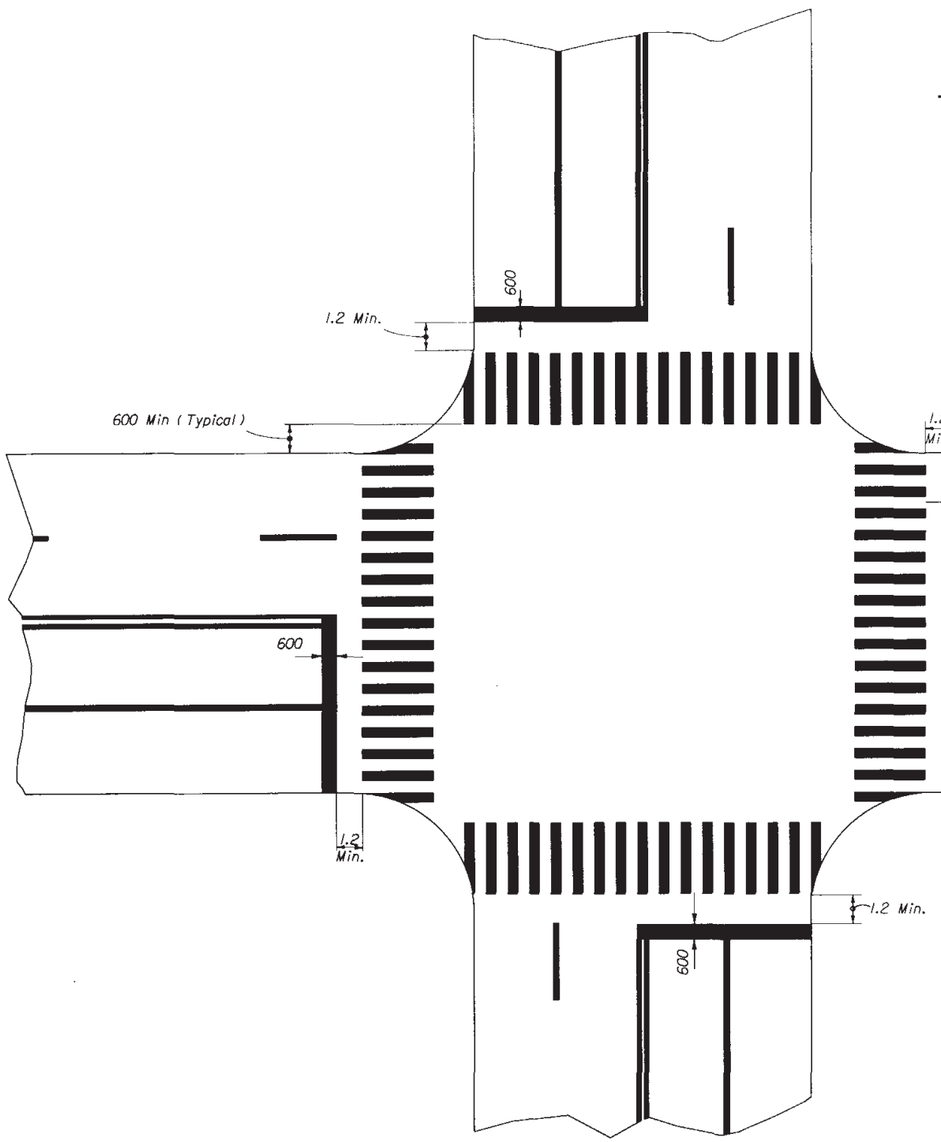

SPECIAL EMPHASIS CROSSWALK
SIGNALIZED OR STOP SIGN CONTROLLED INTERSECTION

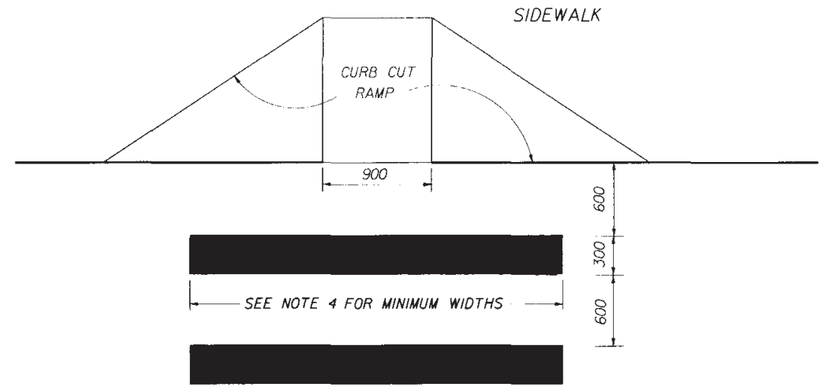

ALL CROSSWALK MARKINGS ARE WHITE

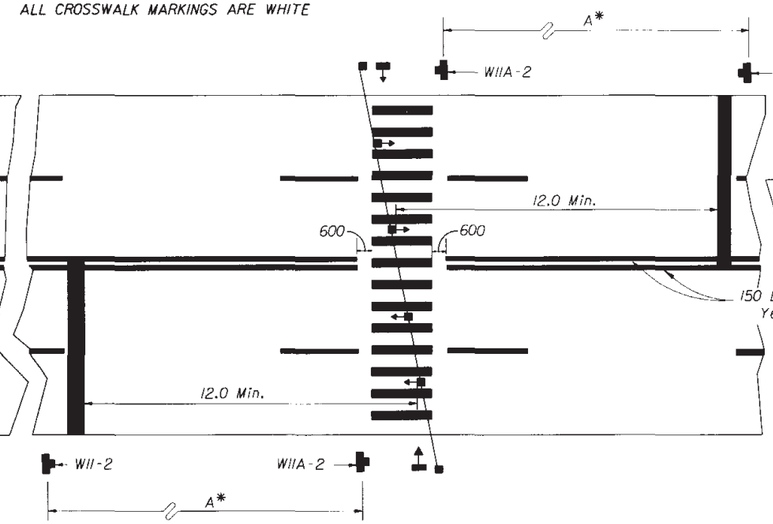

SPECIAL EMPHASIS CROSSWALK
MIDBLOCK-SIGNALIZED

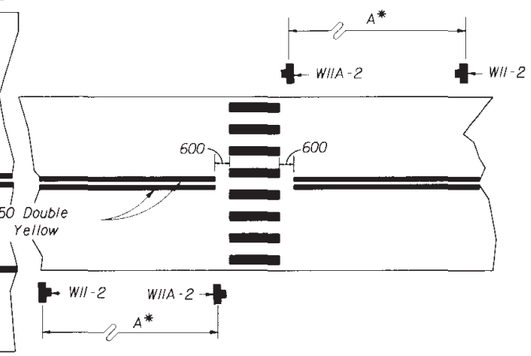

SPECIAL EMPHASIS CROSSWALK
TWO LANE NON-SIGNALIZED

GENERAL NOTES

1. For traffic and pedestrian signal installation, refer to Index No. 17721 through 17890.
2. For handicap curb cut, refer to Index No. 304.
3. For pavement marking and sign installation, refer to Indexes 9535 through 17356.
4. Cross-walk minimum widths:
   Intersection Crosswalk 1.8 m
   Mid Block Crosswalk 3.0 m

APPROACH SPEED MPH	APPROACH SPEED km/h	A* SUGGESTED DISTANCE (m)
25 To 35	40 To 60	83.0
36 To 45	60 To 70	105.0
46 To 55	70 To 90	150.0

STATE OF FLORIDA DEPARTMENT OF TRANSPORTATION
TRAFFIC DESIGN

SPECIAL MARKING AREAS

	Names	Dates
Designed By		83
Drawn By		83
Checked By		83

Approved By Clark A. Scott
State Traffic Plans Engineer

Revision No.	Sheet No.	Index No.
94	7 of 9	17346

F.H.W.A. Approved:

Markings in or adjacent to bike lanes should be thermoplastic with a mixture of 50 percent glass spheres and 50 percent sharp silica sand applied at a rate of .907 kg for each .929 m².

The sharp silica sand shall meet the following gradation requirements:

U.S. Sieve Number	Percent Passing
850 µm 20	100
300 µm 50	0-100

(Florida Standard Spec. 711-4.6)

Recommended spacing of diamond symbol: immediately after intersections and major driveways and at a maximum spacing of 182 meters for urban sections and 400 meters for rural sections.

Raised pavement markings and raised barriers can cause steering difficulties and should not be used to delineate bicycle lanes.
All pavement markings and pavement messages shall be white.

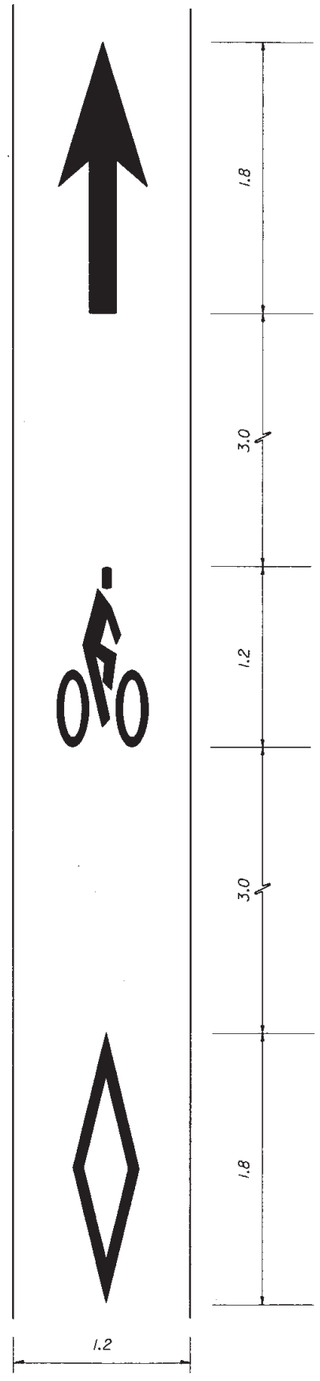

DETAIL OF BIKE LANE MARKINGS

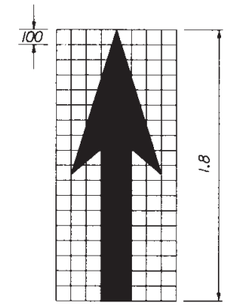

0.39 m²

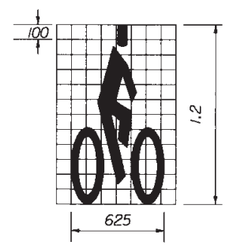

0.21 m

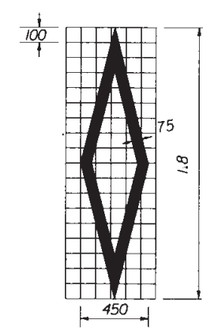

0.60 m²

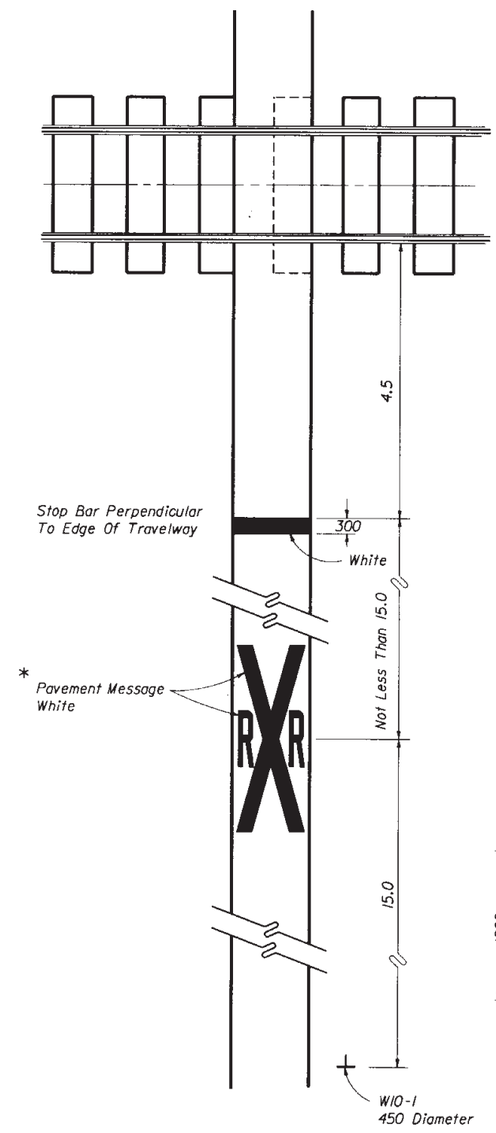

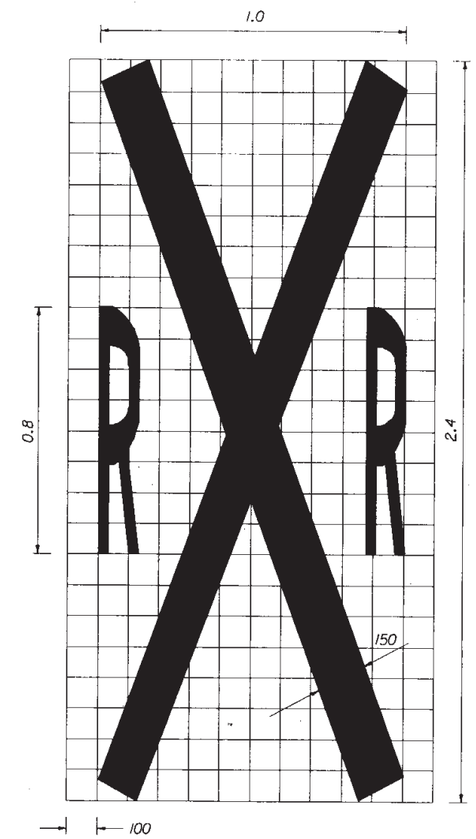

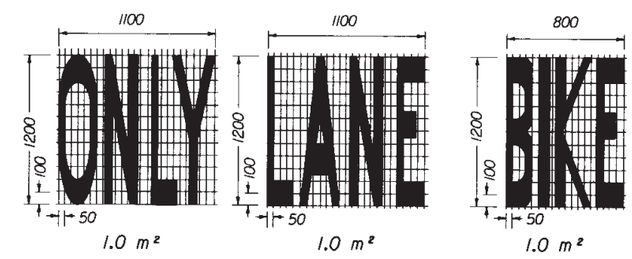

PAVEMENT MESSAGE DETAILS

* NOTE
When used on a bike lane (adjacent to vehicle lane) markings shall be placed adjacent to markings for vehicles & W10-1 sign shall be sized and placed for vehicles.

STATE OF FLORIDA DEPARTMENT OF TRANSPORTATION
TRAFFIC DESIGN

SPECIAL MARKING AREAS (BICYCLE)

	Names	Dates
Designed By		08/84
Drawn By		08/84
Checked By		08/84

Approved By Charles A Scott
State Traffic Plans Engineer

Revision No.	Sheet No.	Index No.
94	8 of 9	17346

F.H.W.A. Approved:

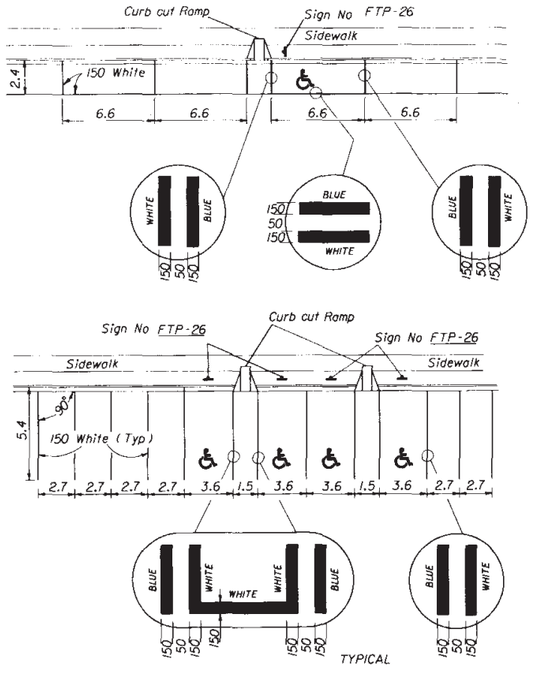

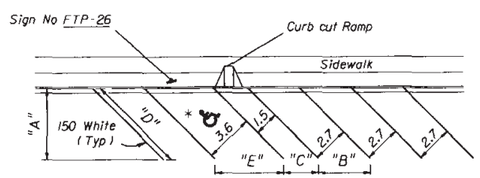

* FOR HANDICAPPED MARKINGS - SEE ABOVE

	"DIMENSIONS"				
△°	"A"	"B"	"C"	"D"	"E"
45°	5.8	3.9	2.1	8.2	5.2
60°	6.1	3.2	1.7	7.1	4.3

NOTES:

1. Dimensions are to the centerline of markings.
2. An Access Aisle is required for each handicapped space when angle parking is used.
3. Criteria for pavement markings only, not curb cut ramp locations. For ramp locations refer to plans.
4. Blue pavement markings shall be tinted to match shade 15180 of Federal Standards 595a.

PAVEMENT MARKING FOR CURB CUT RAMPS IN REST AREAS

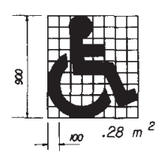

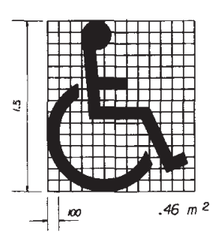

USE OF PAVEMENT SYMBOL IN HANDICAPPED PARKING SPACES IS OPTIONAL. WHEN USED THE SYMBOL SHALL BE 900 mm OR 1.5 m HIGH AND WHITE IN COLOR.

HANDICAPPED PAVEMENT SYMBOL

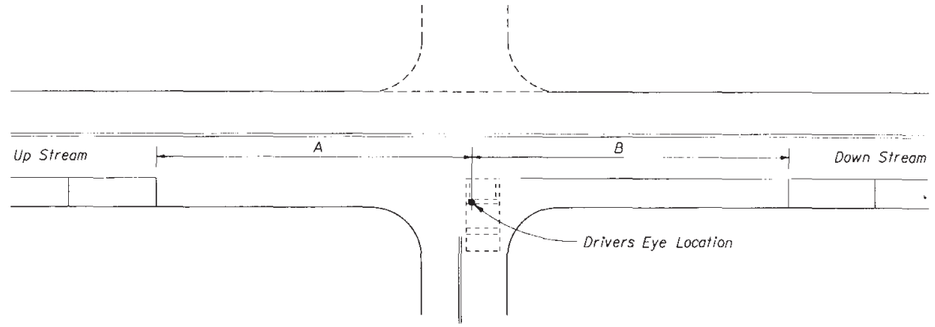

SPEED MPH	SPEED km/h	UP STREAM (A)	DOWN STREAM (B)	
			2 LANE	4 LANE
0-30	0-50	25.5	18.0	13.5
35	60	30.0	21.0	15.0

MINIMUM PARKING RESTRICTION (m) FOR NON-SIGNALIZED INTERSECTION

NOTES

1. Distances measured longitudinally along the street from driver location of entering vehicle to end of parking restriction.
2. Distances applicable to intersecting street, major driveways and other driveways to the extent practical.
3. For non-signalized intersections, the values above shall be compared with the values for signalized intersections and the maximum restrictions implemented. These restrictions apply to both handicapped and non-handicapped parking.

MINIMUM PARKING RESTRICTION FOR NON-SIGNALIZED INTERSECTIONS

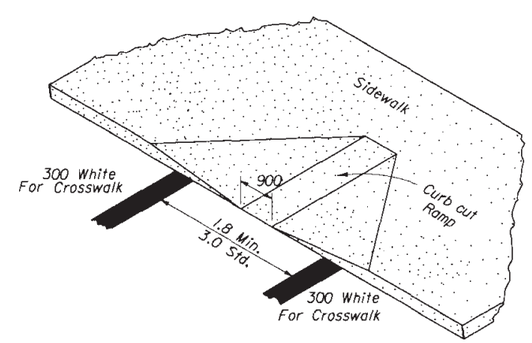

TYPICAL MARKINGS FOR CROSSWALKS

REFER TO INDEX NO. 17346 2 OF 8

GENERAL NOTES (Signalized & Non-signalized)

1. For entrances to a one-way street, the downstream restriction may be reduced to 6.0 m.
2. Parking shall not be allowed within 6.0 m of a crosswalk.
3. All parking lane markings shall be 150 mm white.
4. Parking lane lines shall be broken at driveways.
5. Refer to Chapter 316, Fla. statutes, for laws governing parking spaces.
6. Where curb and gutter is used, the gutter pan width may be included as part of the minimum width of parking lane, but desirably the lane width should be in addition to that of the gutter pan.

TYPE I

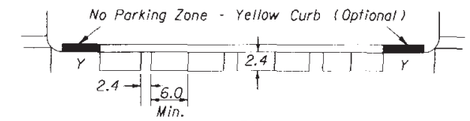

TYPE II

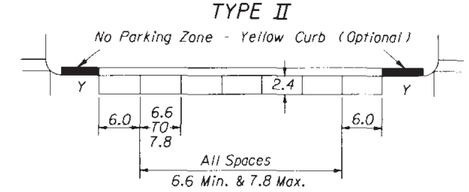

TYPE III

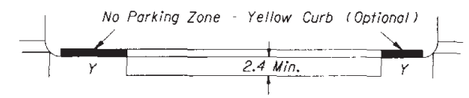

SPEED LIMIT	SPEED LIMIT MPH	SIGNALIZED INTERSECTIONS
0 - 30	0 - 50	9.0
35	60	15.0

DISTANCE FROM CURB RADIUS (Y)

PARKING RESTRICTION (m) FOR SIGNALIZED INTERSECTION

NOTES:

1. Parking restrictions measured from curb radius point.
2. Restrictions for handicapped parking are the same as those applied to non-signalized intersections.

MINIMUM PARKING RESTRICTION FOR SIGNALIZED INTERSECTION

STATE OF FLORIDA DEPARTMENT OF TRANSPORTATION
ROAD DESIGN

SPECIAL MARKING AREAS (PARKING)

	Names	Dates
Designed By		08/86
Drawn By		08/86
Checked By		08/86

Approved By Clark A Scott
State Traffic Plans Engineer

Revision No.	Sheet No.	Index No.
94	9 of 9	17346

F.H.W.A. Approved:

Aluminum Post: 10 mm ø Aluminum Button Head Bolt with Nut and Lockwasher or 24 mm ø Stainless Steel Hex Head Bolt with Flat Washer under Head and Lockwasher under Nut.

Channel Post: Provide Attachement in Accordance with the "Sign Attachment Detail" on Index No. 11865.

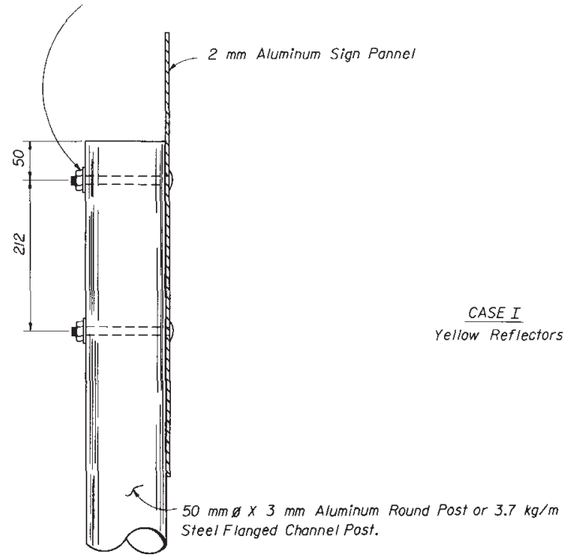

CASE I
Yellow Reflectors

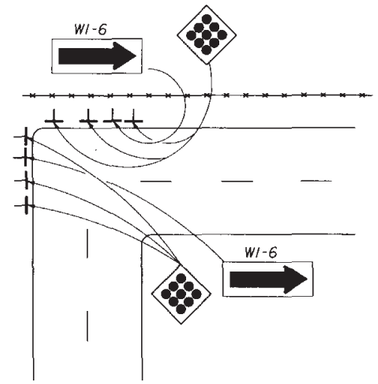

CASE I
Yellow Reflectors

CASE I ... Object Markers (Type I) shall have a Yellow Reflective Background, and Yellow Reflective Buttons.

CASE II ... End of Road Markers shall have a Red Reflective Background, and Red Reflective Buttons.
Payment shall be under Pay Item for Type I Object Marker.

NOTE: For pavement marking see index no. 17346
No guardrail is required unless special field conditions require its use

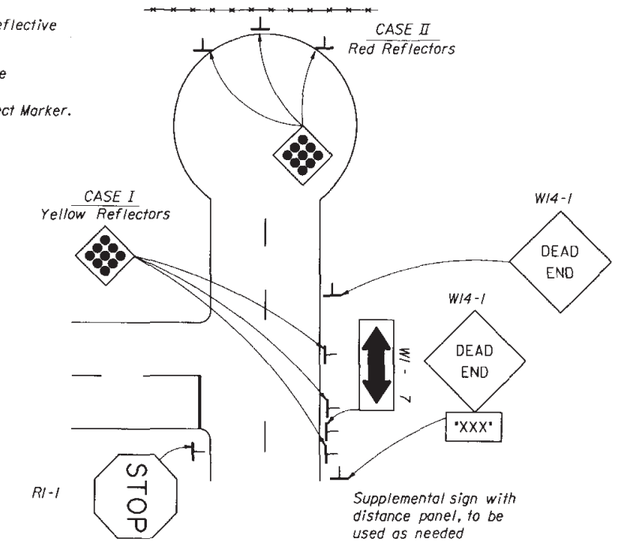

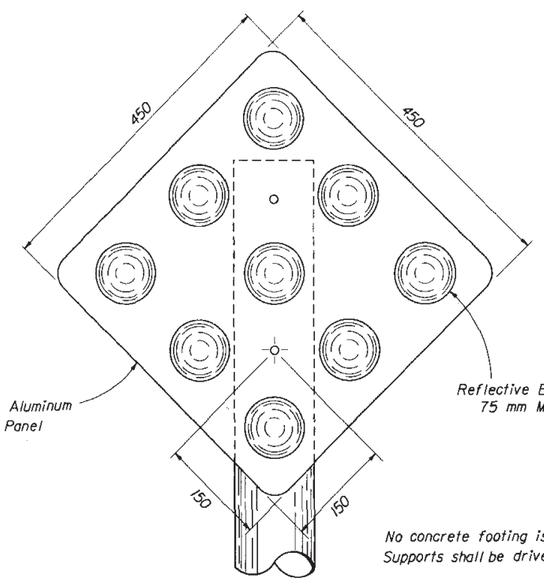

No concrete footing is required for delineator supports. Supports shall be driven 900 mm into the ground.

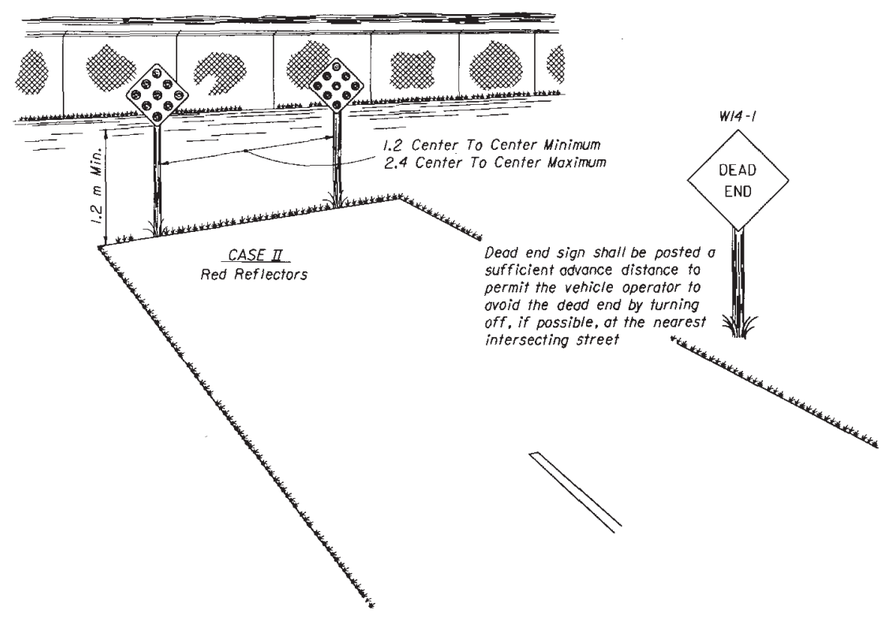

Dead end sign shall be posted a sufficient advance distance to permit the vehicle operator to avoid the dead end by turning off, if possible, at the nearest intersecting street

NOTES:

1. This index applicable to residential and minor streets only major streets to be evaluated on a case by case basis.
2. "T"-intersection - Two-Way arrows and reflectors are optional. The need should be based on a review of each location.
3. For additional details on aluminum round post, steel flanged channel post, sign panel material and bolts, nuts and washers see Index Nos. 11860 and 11865.
4. Case I Installation - The arrow panels and object markers shall be located approximately 6.0 m, but not less than 3.6 m from the edge of the travel lane.

STATE OF FLORIDA DEPARTMENT OF TRANSPORTATION
TRAFFIC DESIGN

TRAFFIC CONTROLS FOR STREET TERMINATIONS

	Names	Dates
Designed By		
Drawn By		11/74
Checked By		11/74
F.H.W.A. Approved:		

Approved By Clark A. Scott
State Traffic Plans Engineer

Revision No.	Sheet No.	Index No.
94	1 of 1	17349

** Note:

Two assemblies are required; one for each side of the ramp, showing those services in each particular direction from the ramp terminal.

Ramp mounted signs shall be installed to avoid conflict with existing signs and in no case should they be placed within 30.0 m of another sign.

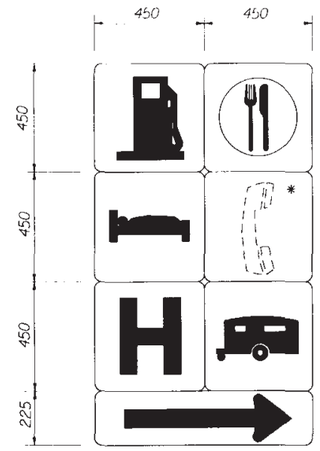

DETAIL "D"

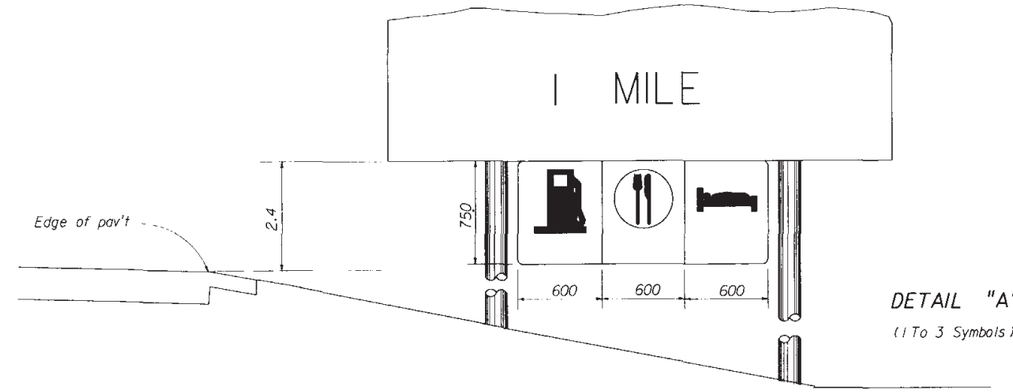

DETAIL "A"

(1 To 3 Symbols)

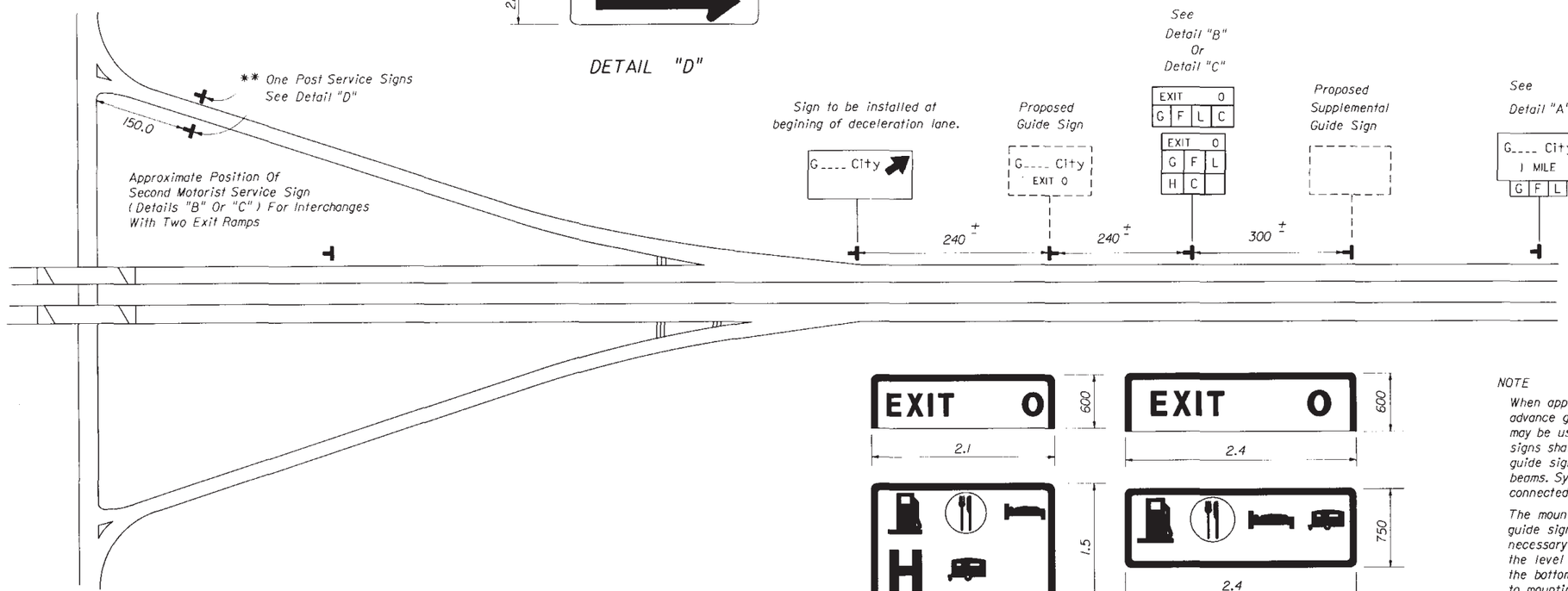

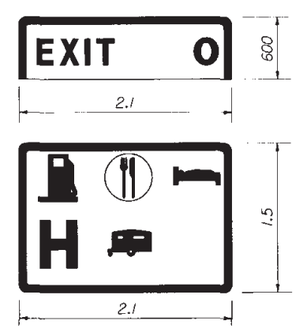

DETAIL "B"

(4 To 6 Symbols)

DETAIL "C"

(4 Symbols)

NOTE

When approved for attachment to the advance guide signs, up to 3 services may be used for an exit. The symbol signs shall be suspended from the guide sign panel or existing wind beams. Symbol signs are not to be connected to existing sign posts.

The mounting height of the advance guide sign shall be increased, where necessary, to provide 2.4 m between the level of the pavement edge and the bottom of the guide sign, prior to mounting the supplementary panel.

GENERAL NOTES

1 - Only those services meeting criteria established by the Department and approved by the State Traffic Operations Engineer for each interchange shall be shown. Symbol signs for motorist services shall always appear in the following order reading from left to right and top to bottom: Gas, Food, Lodging, Phone *, Hospital, Camping.

* The phone symbol shall not be shown whenever any Gas, Food, Lodging or Camping symbol appears.

2 - Symbols shall appear consecutively on the sign with no positions left blank or reserved for intermediate symbols not currently approved for a particular interchange.

3 - All motorist service signs to have White Legend and Border with Blue Background.

4 - For mounting details see Index 9535 for Type "A" breakaway or Index 11860 for Type "C" Frangibility.

STATE OF FLORIDA DEPARTMENT OF TRANSPORTATION
TRAFFIC DESIGN

SIGNING FOR MOTORIST SERVICES

	Names	Dates
Designed By		03/76
Drawn By		
Checked By		03/76
F.H.W.A. Approved:		09/27/76

Approved By: Charles A. Scott
State Traffic Plans Engineer

Revision No.	Sheet No.	Index No.
94	1 of 1	17350

STATE OF FLORIDA
WELCOME CENTER
1 MILE

Sign No. FTP-17

STATE OF FLORIDA
WELCOME CENTER

Sign No. FTP-18

STATE OF FLORIDA
OFFICIAL
WELCOME CENTER

Sign No. FTP-19

WELCOME
CENTER

Sign No. FTP-20

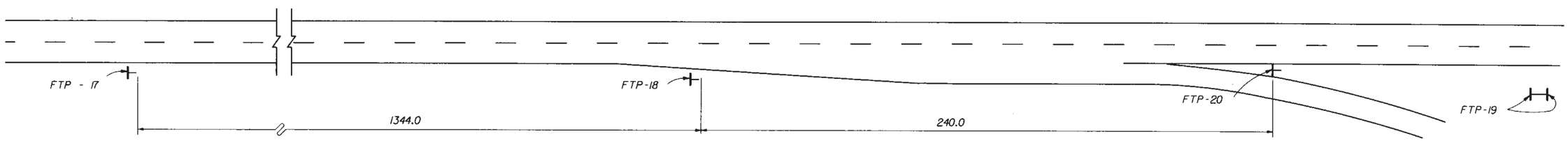

Note : Roadway not drawn to scale
Distances shown are appropriate for adequate driver communication but may be altered slightly if field conditions require.

Notes :

(1) Signs and sign structures shall be erected in accordance with the details shown on Index 9535.

(2) Sign FTP-19 shall be located on the Welcome Center grounds in proximity to the building and as far from the main line roadway as possible (2 signs back to back).

(3) Sign FTP-17, 18, 19 shall be located on limited access highways only.

(4) All legend to be Series E.

(5) (Sign No. FTP - 19 To Be Paid For By The Dept. Of Tourism)

(6) See Index 17355 for sign details.

Tourist Information
Center
NEXT RIGHT

Sign No. FTP-21

Note: Sign FTP-21 shall be used as a supplemental guide sign at interchanges which have a Tourist Information Center approved for such signing (locate half-way between normal guide signs)

FOR LIMITED ACCESS HIGHWAYS

STATE OF FLORIDA DEPARTMENT OF TRANSPORTATION
TRAFFIC DESIGN

WELCOME CENTER SIGNING

	Names	Dates	Approved By Charles A. Scott, State Traffic Plans Engineer		
Designed By					
Drawn By		06/75			
Checked By		06/75	Revision No.	Sheet No.	Index No.
F.H.W.A. Approved:			94	1 of 2	17351

SIGN NO. FTP-22A

SIGN NO. FTP-19

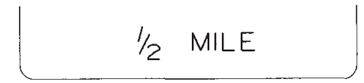

SIGN NO. FTP-22B

SIGN NO. FTP-23

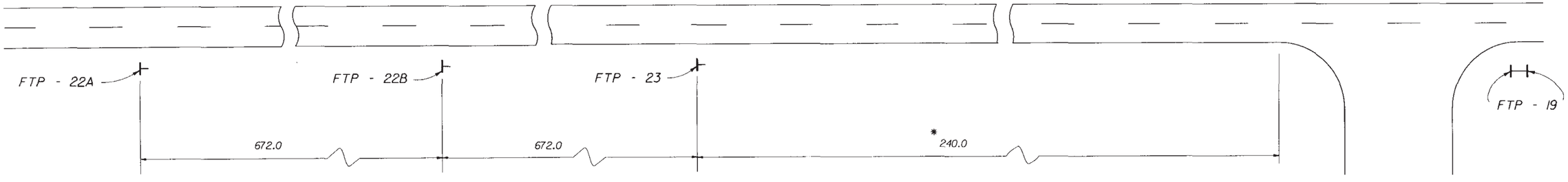

Note :
One sign FTP-22A or 22B should be used depending on speed, roadside development & geometric conditions.

NOTE :
Roadway not drawn to scale

*240.0 m Maximum For Rural Conditions
15.0 m Minimum For Congested Areas

Notes
(1) Signs and sign structures shall be erected in accordance with the details shown on Index 9535.

(2) Sign FTP-19 shall be located on the Welcome Center grounds in proximity to the building and as far from the Main Line Roadway as possible (2 signs back to back)

(3) All legend to be Series E.

(4) (Sign No. FTP-19 to be paid for by the Dept. of Tourism).

FOR PRIMARY HIGHWAYS

STATE OF FLORIDA DEPARTMENT OF TRANSPORTATION
TRAFFIC DESIGN

WELCOME CENTER SIGNING

	Names	Dates
Designed By		
Drawn By		
Checked By		

Approved By Clark A. Scott
State Traffic Plans Engineer

Revision No.	Sheet No.	Index No.
94	2 of 2	17351

F.H.W.A. Approved:

Alternating Skip Line

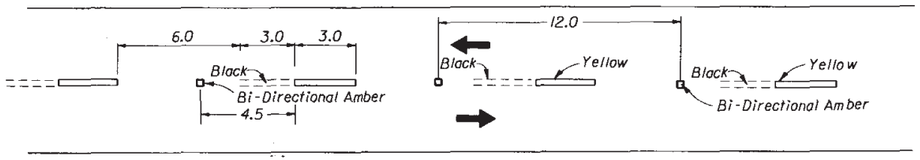

Skip Line

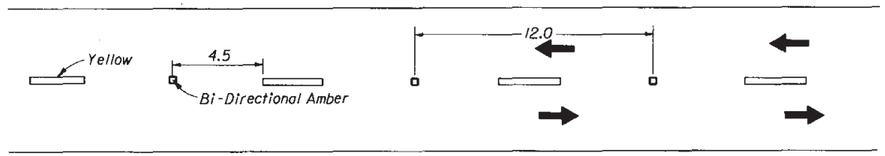

Solid Line With Alternating Skip

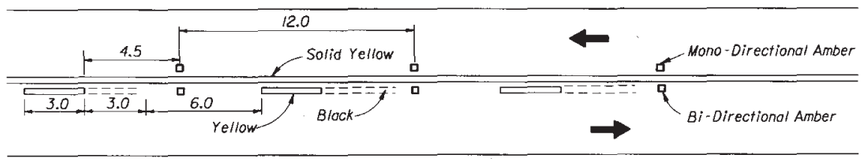

Double Solid Line

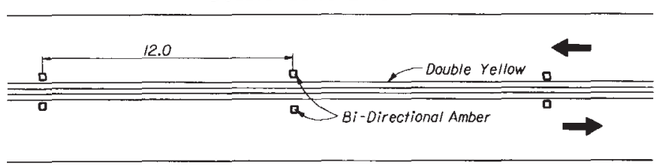

Solid Line With Skip

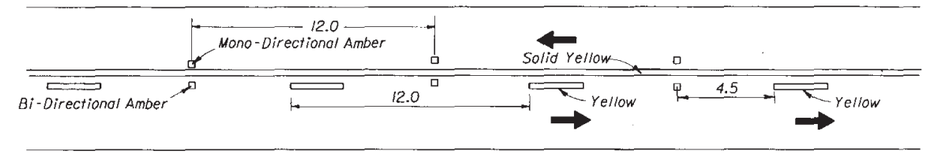

Skip Line With Two Way Left Turn Lane

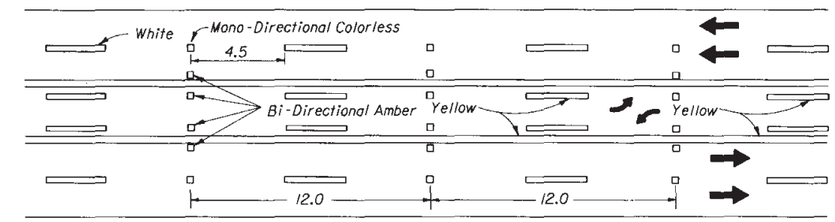

Alternating Skip Line With Two Way Left Turn Lane

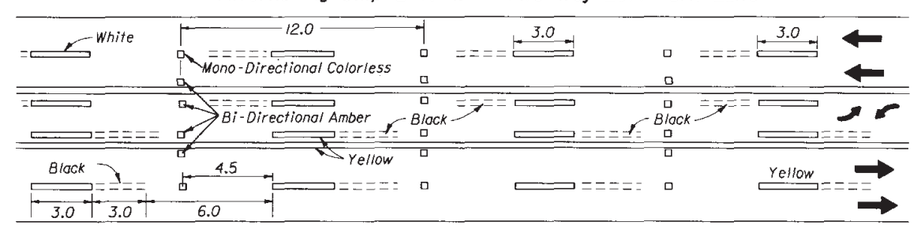

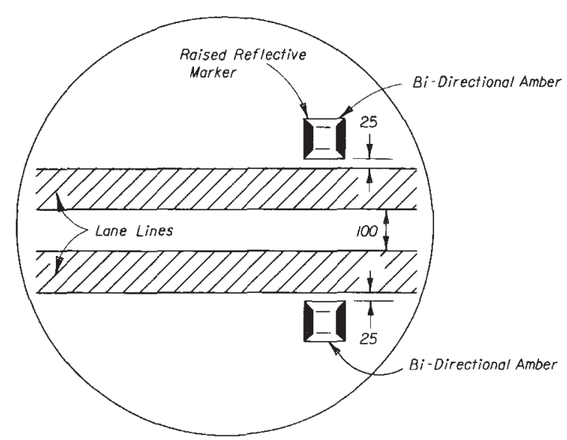

1. Reflective Pavement Markers shall be spaced at 12.0 m on all skip lane lines and skip center lines. This spacing may be reduced to 6.0 m if specifically called for in the plans.
2. The spacing on solid lines and solid/skip combination lines shall be 12.0 m.
3. All R.P.M.s shall be offset 25 mm from solid lines.
4. These spacings may be reduced for sharp curves if required.
5. All R.P.M.s shall be class "B".

STATE OF FLORIDA DEPARTMENT OF TRANSPORTATION
ROAD DESIGN

TYPICAL PLACEMENT OF REFLECTIVE PAVEMENT MARKERS

	Names	Dates
Designed By		10/87
Drawn By		10/87
Checked By		10/87

Approved By: Clark A. Scott
State Traffic Plans Engineer

Revision No.	Sheet No.	Index No.
94	1 of 2	17352

F.H.W.A. Approved:

NOTE

Raised pavement markers shall be set (25 mm) outside of line.

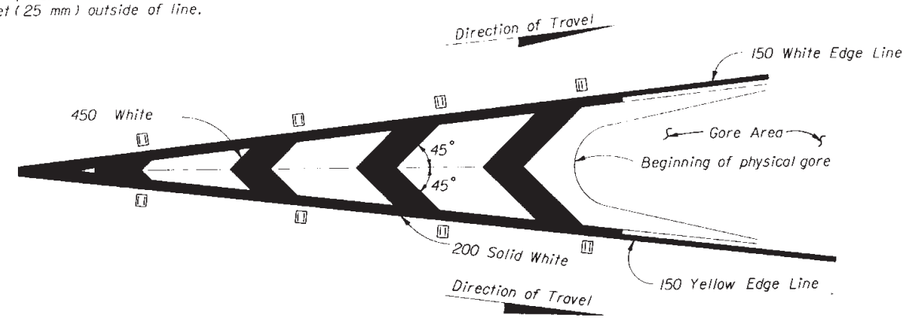

RPM PLACEMENT FOR TRAFFIC CHANNELIZATION AT GORE
(TRAFFIC FLOWS IN SAME DIRECTION)

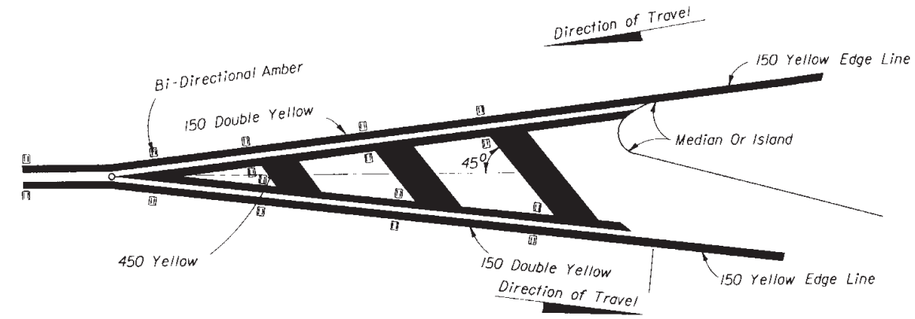

RPM PLACEMENT FOR TRAFFIC SEPARATION
(TRAFFIC FLOWS IN OPPOSITE DIRECTION)

NOTE

Raised pavement markers (Bi-Directional Red and Colorless) should be used in all gores of this type

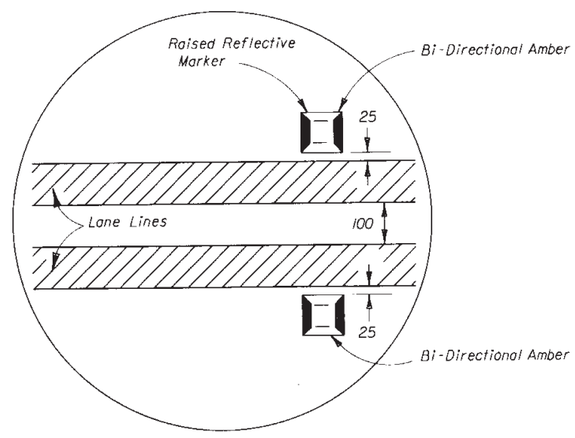

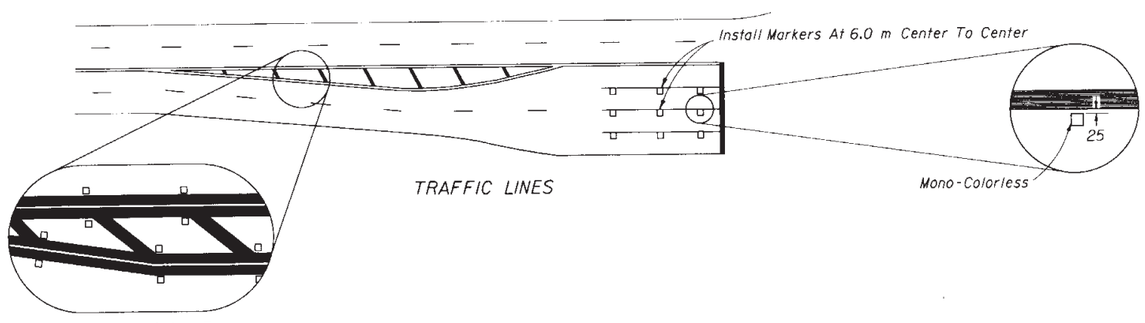

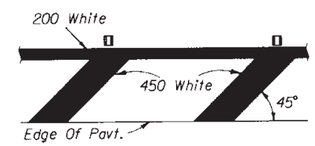

PLACEMENT OF RPMS ON SHOULDER MARKINGS

Shoulder Markings For Left Side Of Roadway Shall Be Yellow.

For Placement Of RPMS On Ramps See Index 17345.

STATE OF FLORIDA DEPARTMENT OF TRANSPORTATION
TRAFFIC DESIGN

TYPICAL PLACEMENT OF REFLECTIVE PAVEMENT MARKERS

	Names	Dates
Designed By		10/75
Drawn By		
Checked By		10/75

Approved By Charles A. Scott
State Traffic Plans Engineer

Revision No.	Sheet No.	Index No.
94	2 of 2	17352

F.H.W.A. Approved:

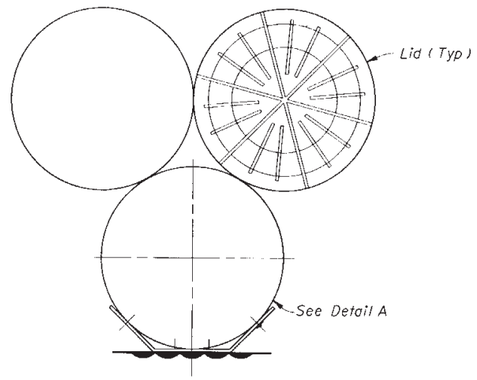

TOP VIEW

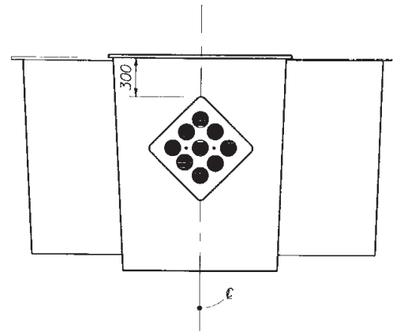

PLACEMENT OF OBJECT MARKER

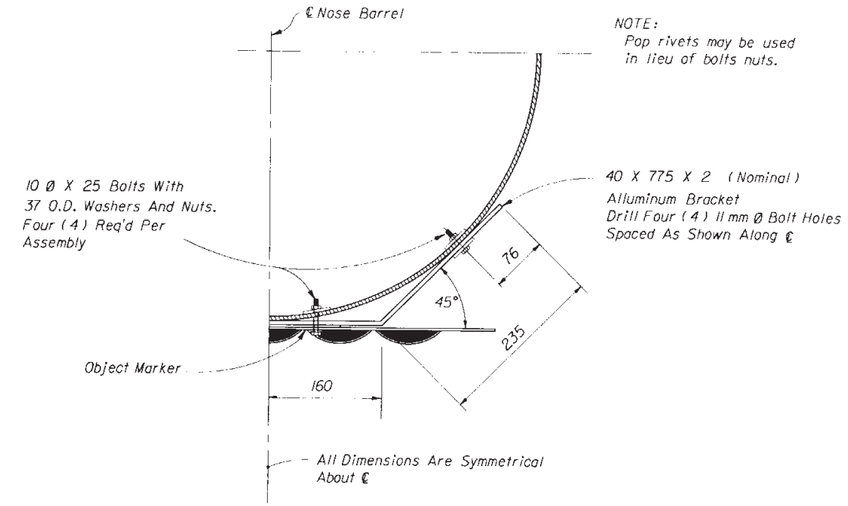

ENERGITE SYSTEM

DETAIL A

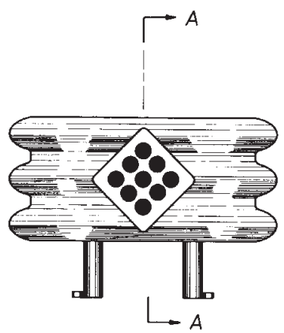

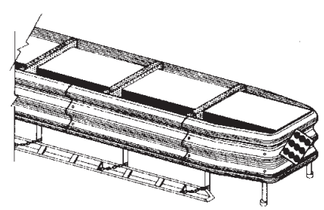

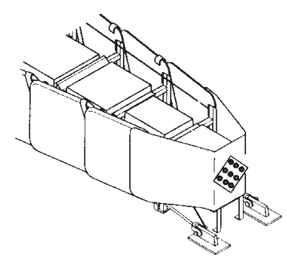

HEX-FOAM SANDWITCH SYSTEM

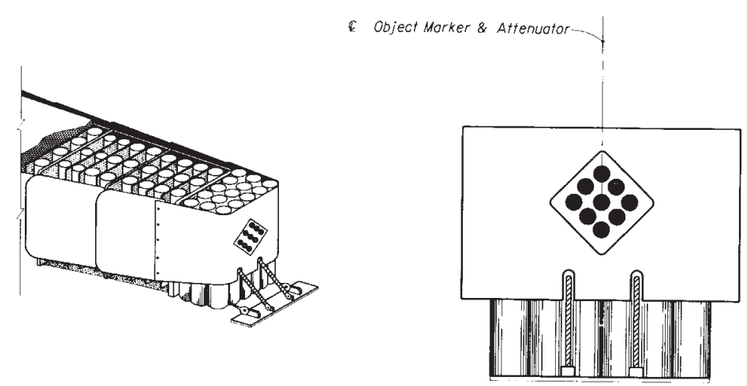

Typical Placement Of Object Marker On Attenuator (HI-DRO SHOWN)

HI-DRO SYSTEM

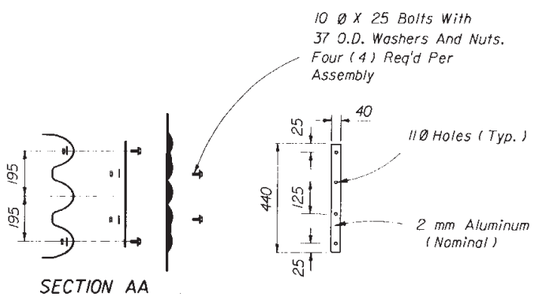

G-R-E-A-T SYSTEM

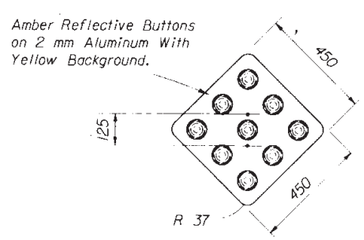

OBJECT MARKER

GENERAL NOTES

1. Cost for Object Marker to be incidental to the cost of Attenuator Systems.

STATE OF FLORIDA DEPARTMENT OF TRANSPORTATION
TRAFFIC DESIGN

MARKINGS FOR ATTENUATION SYSTEMS

	Names	Dates	Approved By
Designed By			Clark A. Scott
Drawn By		09/81	State Traffic Plans Engineer
Checked By			

F.H.W.A. Approved:	Revision No.	Sheet No.	Index No.
	94	1 of 1	17353

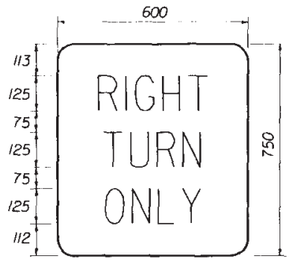

Series C Letters.

FTP - 1
750 x 600
18 Border - 75 Radii
Color
Background White
Legend & Border Black

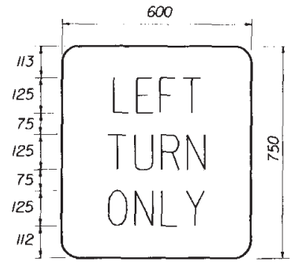

Series C Letters.

FTP - 2
750 x 600
18 Border - 75 Radii
Color
Background White
Legend & Border Black

FREEWAY USE

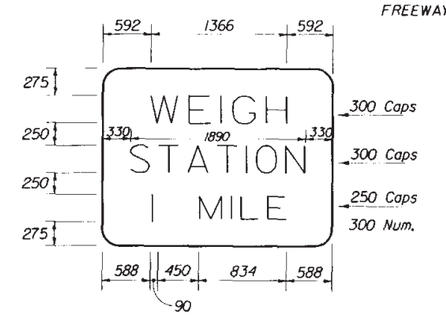

Series E Letters.

FTP - 3
1950 x 2550
50 Border - 225 Radii
Color
Background Green
Legend & Border White

FREEWAY USE

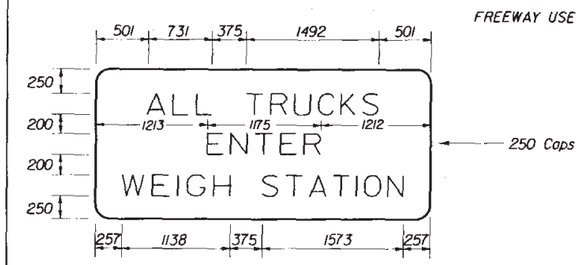

Series E Letters.

FTP - 4
1650 x 3600
50 Border - 225 Radii
Color
Background White
Legend & Border Black

FREEWAY USE

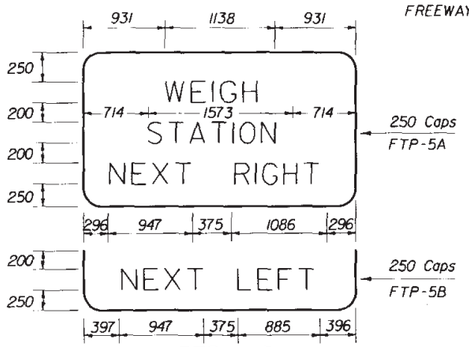

Series E Letters.

FTP - 5
1650 x 3000
50 Border - 225 Radii
Color
Background Green
Legend & Border White

FREEWAY USE

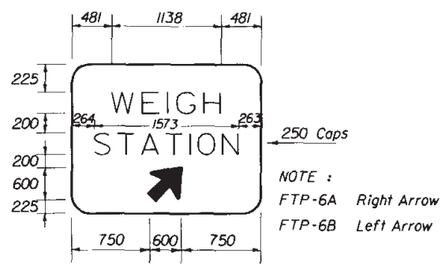

NOTE :
FTP-6A Right Arrow
FTP-6B Left Arrow

Series E Letters.

FTP - 6
1950 x 2100
50 Border-150 Radii
Color
Background Green
Legend & Border White

OTHER THAN FREEWAY USE

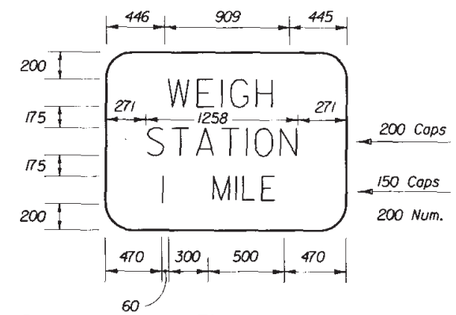

Series E Letters.

FTP - 7
1350 x 1800
50 Border - 150 Radii
Color
Background Green
Legend & Border White

OTHER THAN FREEWAY USE

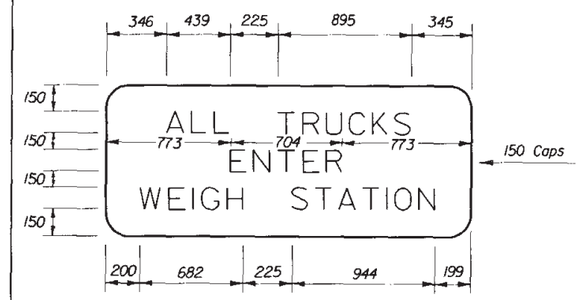

Series E Letters.

FTP - 8
1050 x 2250
50 Border - 150 Radii
Color
Background White
Legend & Border Black

OTHER THAN FREEWAY USE

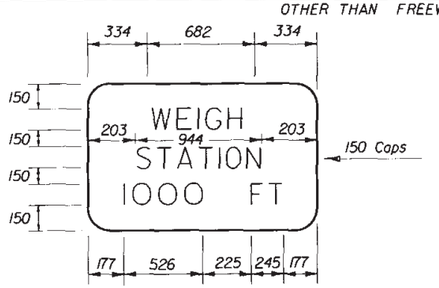

Series E Letters.

FTP - 9
1050 x 1350
50 Border - 150 Radii
Color
Background Green
Legend & Border White

OTHER THAN FREEWAY USE

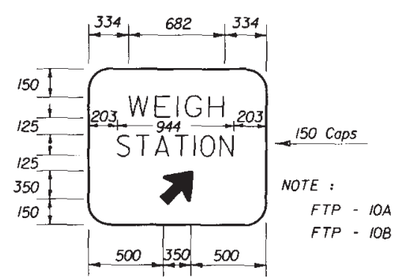

NOTE :
FTP - 10A —— Right Arrow
FTP - 10B —— Left Arrow

FTP - 10
1200 x 1350
50 Border - 150 Radii
Color
Background Green
Legend & Border White

FREEWAY USE

Note
FTP-11 to be used with 5A, 5B, 15A & 15B.

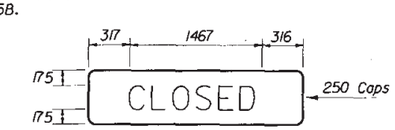

Series E Letters.

FTP - 11
600 x 2100
50 Border - 75 Radii
Color
Background Green
Legend & Border White

OTHER THAN FREEWAY USE

Note
FTP-12 to be used with FTP-9

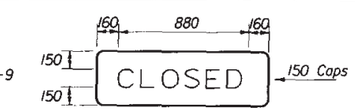

FTP - 12
450 x 1200
50 Border - 75 Radii
Color
Background Green
Legend & Border White

Series E Letters.

STATE OF FLORIDA DEPARTMENT OF TRANSPORTATION
ROAD DESIGN

SPECIAL SIGN DETAILS

	Names	Dates
Designed By		
Drawn By		
Checked By		

Approved By Charles A. Scott

Revision No.	Sheet No.	Index No.
94	1 of 8	17355

F.H.W.A. Approved:

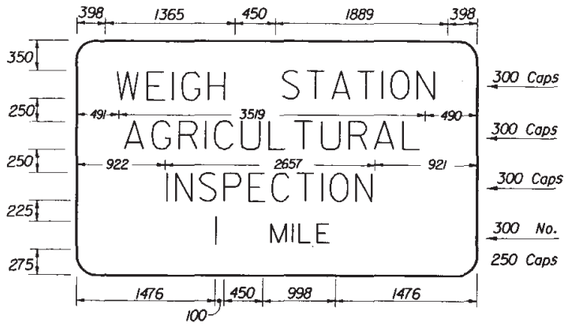

Series E Letters.

FTP - 13
2550 x 4500
50 Border -225 Radii.
Color
Background Green
Legend & Border White

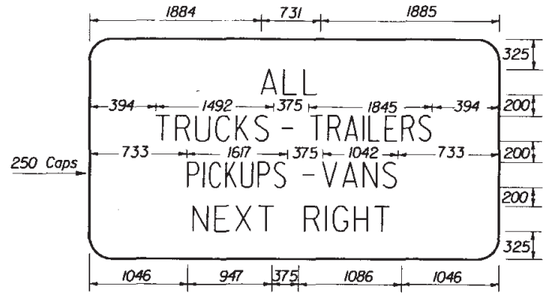

Series E Letters.

On Interstate Station Delete, Pickups-Vans, and reduce Sign height accordingly.

FTP - 14A
2550 x 4500
50 Border - 225 Radii
Color
Background White
Legend & Border Black

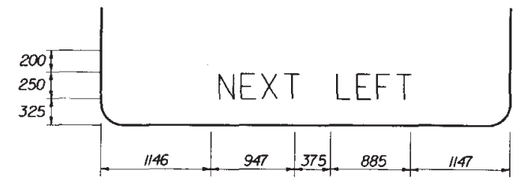

Series E Letters.

FTP - 14B
2250 x 4500
50 Border -225 Radii
Color
Background White
Legend & Border Black

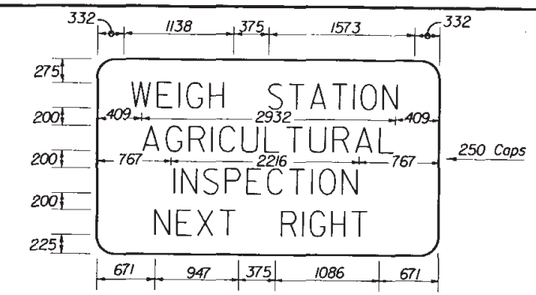

Series E Letters.

FTP - 15A
2100 x 3750
50 Border -225 Radii
Color
Background Green
Legend & Border White

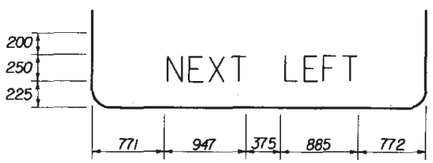

Series E Letters.

FTP - 15B
2100 x 3750
50 Border - 225 Radii
Color
Background Green
Legend & Border White

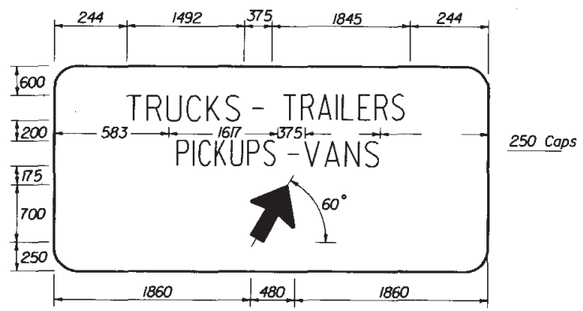

Series E Letters.

FTP - 16
2425 x 4200
50 Border - 225 Radii
Color
Background Green
Legend & Border White

NOTE :
FTP-16A - Right Arrow
FTP-16B - Left Arrow

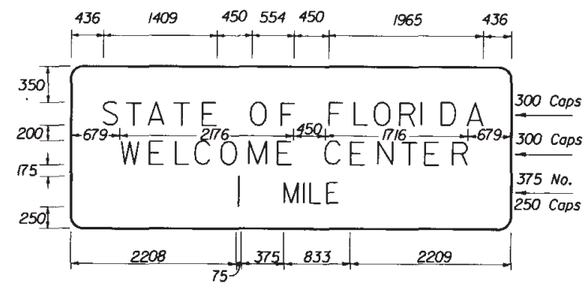

Series E Letters.

FTP - 17
1950 x 5700
75 Border - 225 Radii
Color
Background Blue
Legend & Border White

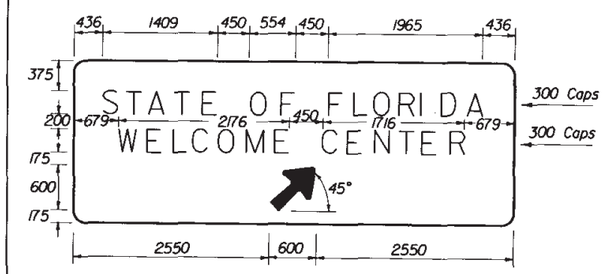

Series E Letters.

FTP - 18
2125 x 5700
75 Border - 225 Radii
Color
Background Blue
Legend & Border White

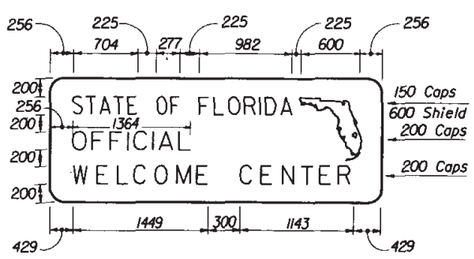

Series E Letters.

FTP - 19
1350 x 3750
50 Border - 225 Radii
Color
Background Blue
Legend & Border White

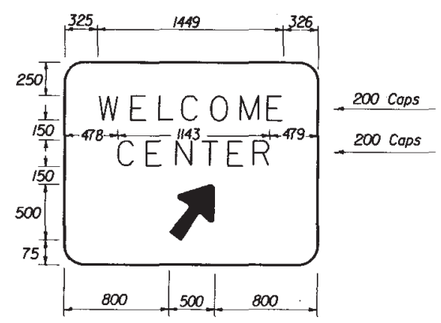

Series E Letters.

FTP - 20
1525 x 2100
50 Border - 225 Radii
Color
Background Blue
Legend & Border White

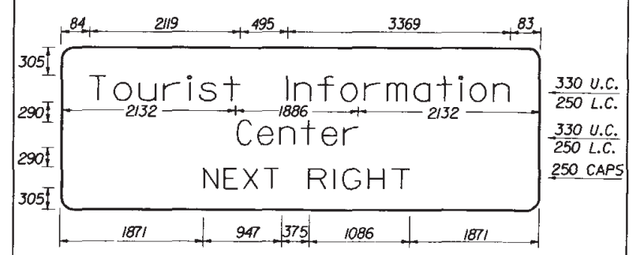

Series E Letters.

2100 x 6150
75 Border - 225 Radii
Color
Background Blue
Legend & Border White

STATE OF FLORIDA DEPARTMENT OF TRANSPORTATION
ROAD DESIGN

SPECIAL SIGN DETAILS

	Names	Dates
Designed By		
Drawn By		
Checked By		
F.H.W.A. Approved:		

Approved By Charles A. Scott

Revision No.	Sheet No.	Index No.
94	2 of 8	17355

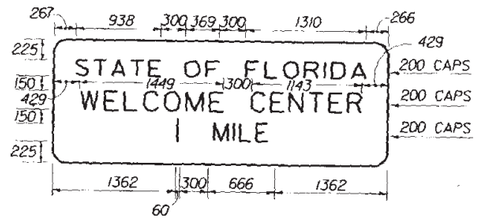

Series E Letters.

FTP - 22A
1350 x 3750
50 Border - 225 Radii
Color
Background Blue
Legend & Border White

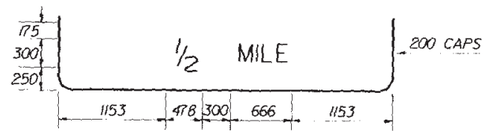

Series E Letters.

FTP - 22B
1500 x 3750
50 Border - 225 Radii
Color
Background Blue
Legend & Border White

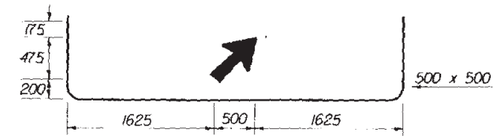

Series E Letters.

FTP - 23
1650 x 3750
50 Border - 225 Radii
Color
Background Blue
Legend & Border White

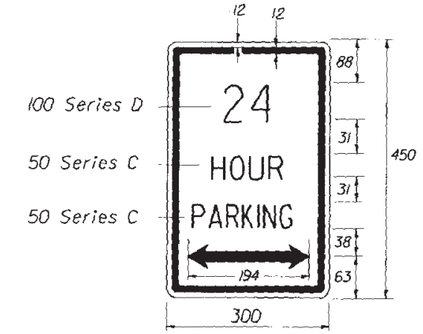

FTP - 24
300 x 450
12 Border - 38 Radii
Color
Background White
Legend & Border Green

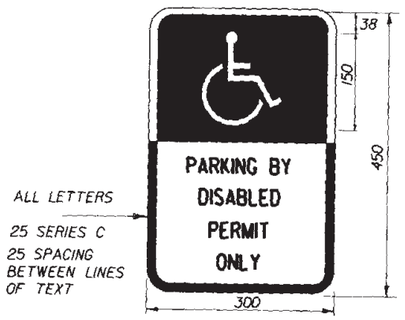

FTP - 25
450 x 300
13 Border 38 Radii
Color Top Bottom
Background Blue White
Legend & Border White Black

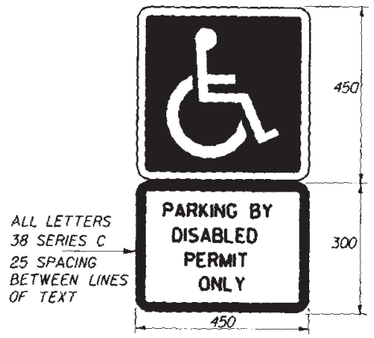

FTP - 26
750 x 450
13 Border - 38 Radii
Color Top Bottom
Background Blue White
Legend & Border White Black

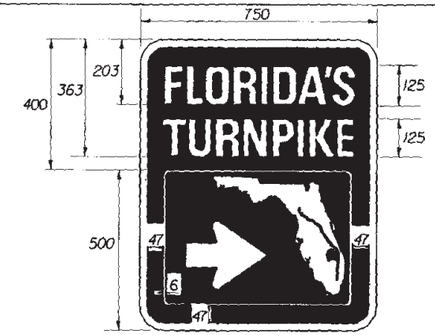

FTP - 27
750 x 900
25 Border - 75 Radii
Color
Background Green
Legend & Border White

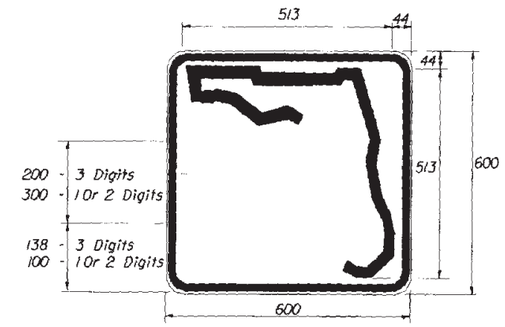

FTP - 28
600 x 600
12 Border - 38 Radii
Color
Background White
Legend & Border Green

See Sheet 4 of 8
For Additional Details

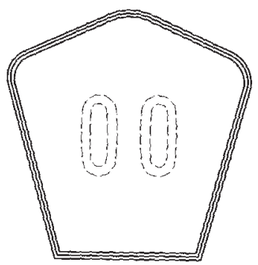

FTP - 29
Color
Background Blue
Legend & Border Yellow

SEE SHEET 4 OF 8 FOR DETAILS.

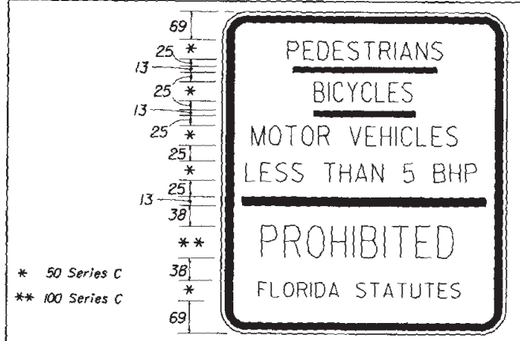

* 50 Series C
** 100 Series C

FTP - 30
750 x 600
50 Border - 75 Radii
Color
Background White
Legend & Border Green

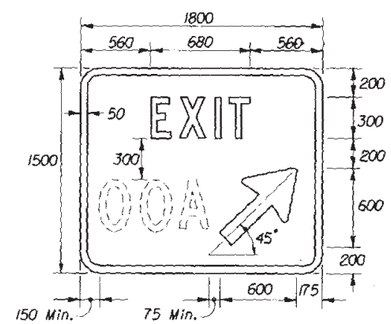

Series C Letters.

FTP - 31
1500 x 1800
50 Border - 150 Radii
Color
Background Green
Legend & Border White

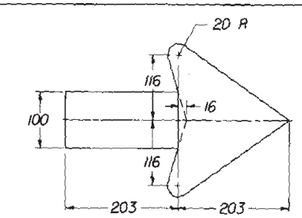

ARROW DETAIL FOR SIGN FTP-27

STATE OF FLORIDA DEPARTMENT OF TRANSPORTATION
ROAD DESIGN

SPECIAL SIGN DETAILS

	Names	Dates	
Designed By			Approved By Clark A. Scott
Drawn By			
Checked By			
F.H.W.A. Approved:			Revision No. 94 / Sheet No. 3 of 8 / Index No. 17355

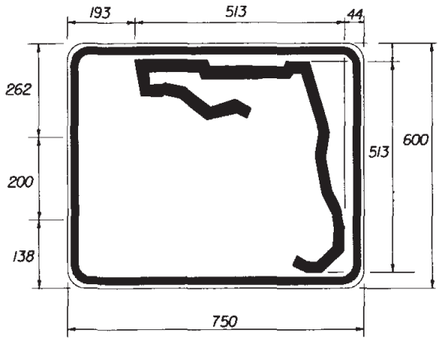

3 or 4 DIGITS

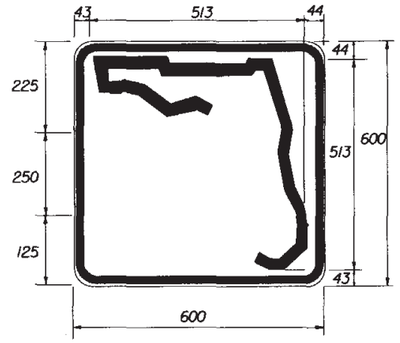

1 or 2 DIGITS

NUMERAL SIZE

DIGITS	NUMERAL SIZE (mm)	SERIES	PANEL SIZE (mm)
1-2	250	D	600 x 600
3	200	C	600 x 750
4	200	C	600 x 750

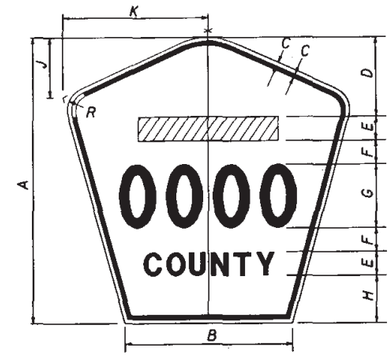

Notes :

1. All Legend Series "D".
2. Color: Yellow Legend and Border on Blue Background.
3. When used on a guide sign, marker must be overlayed on a rectangular Yellow Background as shown in chart. **

SIGN	DIMENSIONS												**
	A	B	C	D	E	F	G	H	J	K	R	S	
1 & 2 DIGIT POST MOUNTED	600	355	9	125	50	50	200	75	128	311	317	133	
3 DIGIT POST MOUNTED	750	444	13	180	63	63	200	118	163	388	84	166	
4 DIGIT POST MOUNTED	900	531	13	250	75	75	200	150	188	463	106	188	
2 DIGIT OVERHEAD	900	531	13	200	75	75	300	100	188	463	106	188	** 1000 x 1025
3 DIGIT OVERHEAD	900	713	19	200	75	75	300	100	200	500	106	206	** 1000 x 1100
4 DIGIT OVERHEAD	1050	838	19	275	75	75	300	175	263	600	106	213	** 1050 x1300

COUNTY ROUTE MARKER DETAIL

FTP - 29

INDEPENDENT USE OTHER THAN FREEWAY

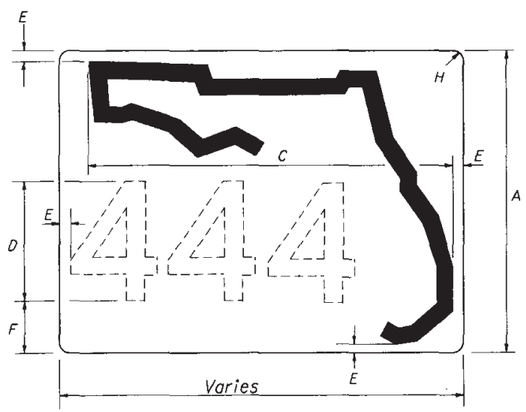

3 OR MORE DIGITS

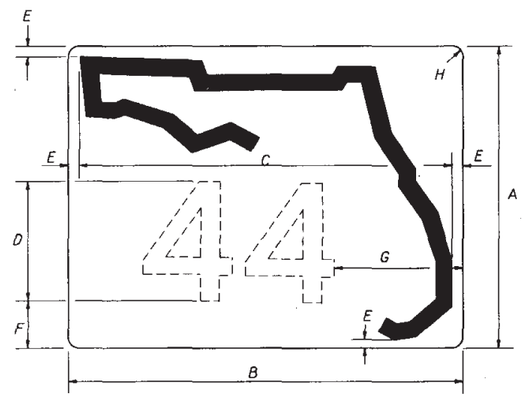

1 OR 2 DIGITS

	A	B	C	D	E	F	G	H
600	600		650	300	25	69	250	38
750	750	950	900	300	25	125	275	38
900	900	1125	1025	375	50	175	300	50

GUIDE SIGN USE

Notes: 1. Florida marker shall have Black Legend with White Background.

2. Stroke width of State outline to be 25 mm for independent use and 32 mm for Guide Sign.

FLORIDA ROUTE MARKER

FTP - 28

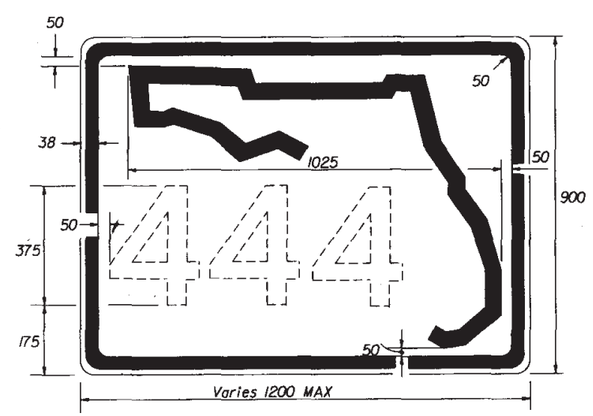

3 OR MORE DIGITS

INDEPENDENT USE FOR FREEWAY

STATE OF FLORIDA DEPARTMENT OF TRANSPORTATION
ROAD DESIGN

SPECIAL SIGN DETAILS

	Names	Dates
Designed By		
Drawn By		
Checked By		
F.H.W.A. Approved:		

Approved By Clark A. Scott

Revision No.	Sheet No.	Index No.
94	4 of 8	17355

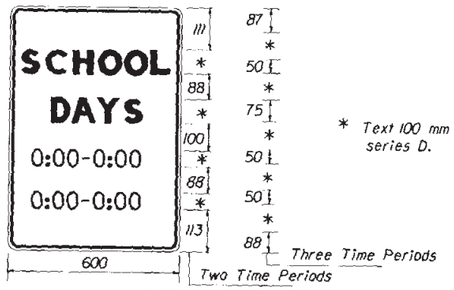

FTP - 32
600 x 900
14 Border 38 Radii

Color
Background White
Legend & Border Black

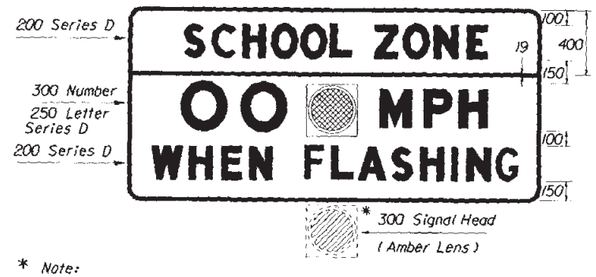

* Note:
Flashing beacon may be placed within or below panel.

FTP - 33
1200 x 2550
31 Border 56 Radii

Color	Top	Bottom
Background	Yellow	White
Legend & Border	Black	Black

FTP - 34
1200 x 2550
31 Border 56 Radii

Color
Background White
Legend & Border Black

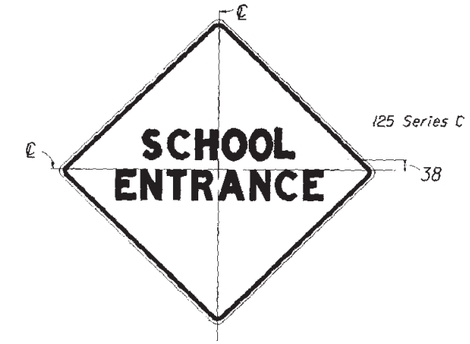

FTP - 35
750 x 750
12 Border 38 Radii

Color
Background Yellow
Legend & Border Black

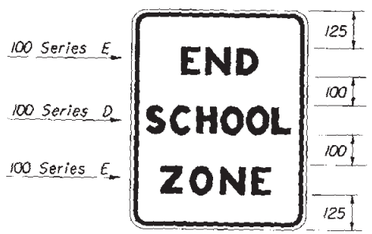

FTP - 36
750 x 600
14 Border 38 Radii

Color
Background White
Legend & Border Black

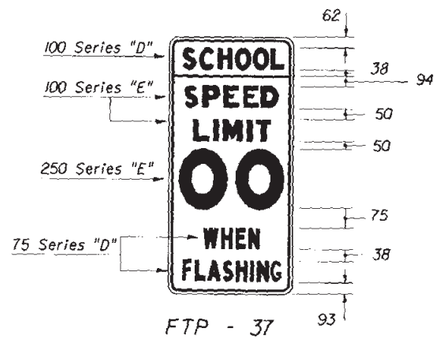

FTP - 37
1200 x 600
14 Border 75 Radii

Color	Top	Bottom
Background	Yellow	White
Legend & Border	Black	Black

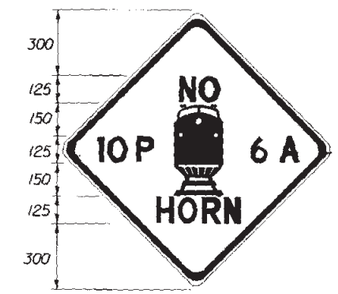

Series C Letters

FTP - 38
900 x 900
13 Border 38 Radii

Color
Background Yellow
Legend & Border Black

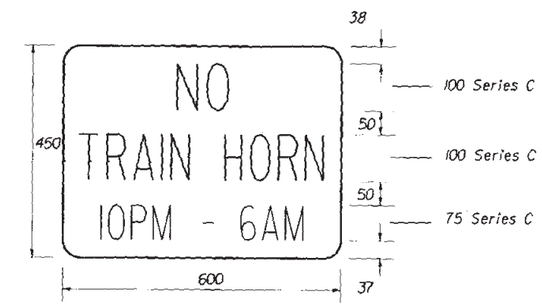

FTP - 38A
450 x 600
13 Border 38 Radii

Color
Background Yellow
Legend & Border Black

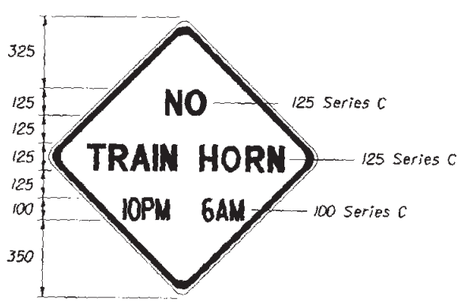

FTP - 38B
900 x 900
13 Border 38 Radii

Color
Background Yellow
Legend & Border Black

Remove the two crosswalk stripes for advance warning sign.

FTP - 39
900 x 900
13 Border 38 Radii

Color
Background Yellow
Legend & Border Black

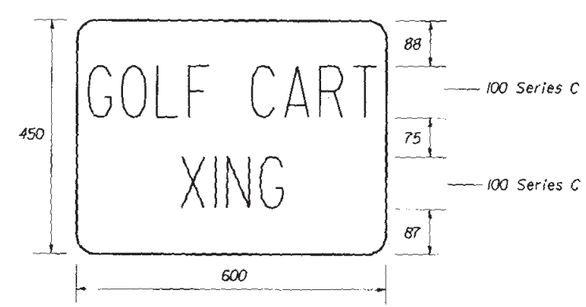

FTP - 39A
450 x 600
13 Border 38 Radii

Color
Background Yellow
Legend & Border Black

STATE OF FLORIDA DEPARTMENT OF TRANSPORTATION
ROAD DESIGN

SPECIAL SIGN DETAILS

	Names	Dates	Approved By
Designed By			Clark A. Scott
Drawn By			
Checked By			
F.H.W.A. Approved:			

Revision No.	Sheet No.	Index No.
94	5 of 8	17355

FTP - 40

900 x 900

13 Border 38 Radii

Color
Background Yellow
Legend & Border Black

50 Series C Letters

FTP - 40A

450 x 600

13 Border 38 Radii

Color
Background Yellow
Legend & Border Black

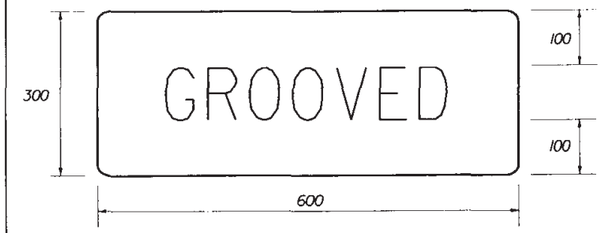

100 Series C Letters

FTP - 41

300 x 600

13 Border 38 Radii

Color
Background Yellow
Legend & Border Black

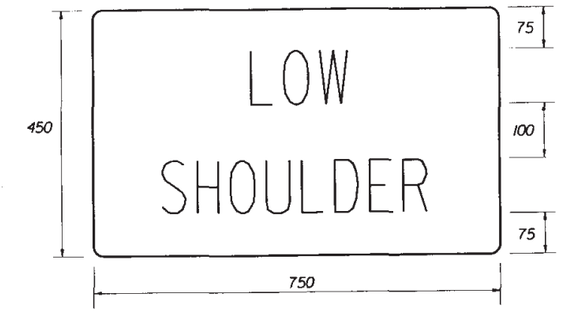

100 Series C Letters

FTP - 42

450 x 750

13 Border 38 Radii

Color
Background Yellow
Legend & Border Black

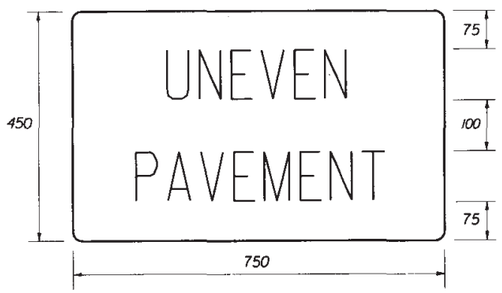

All Letters 100 Series C

FTP - 43

450 x 750

13 Border 38 Radii

Color
Background Yellow
Legend & Border Black

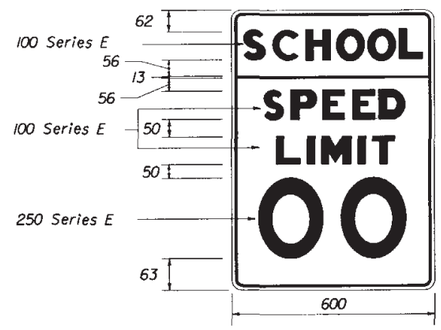

FTP - 44

900 x 600

12 Border 38 Radii

Color	Top	Bottom
Background	Yellow	White
Legend & Border	Black	Black

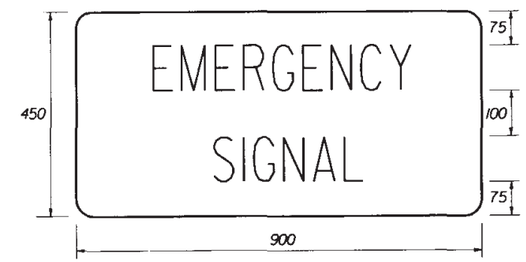

100 Series D Letters

FTP - 45

450 x 900

13 Border 75 Radii

Color
Background White
Legend & Border Black

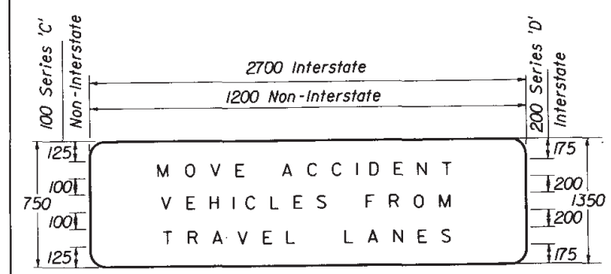

FTP - 46

19 Border 150 Radii

Color
Background White
Legend & Border Black

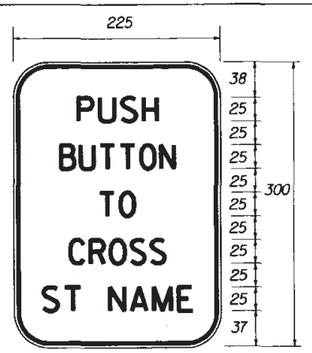

Series D Letters

FTP - 47

300 x 225

13 Border 38 Radii

Color
Background White
Legend & Border Black

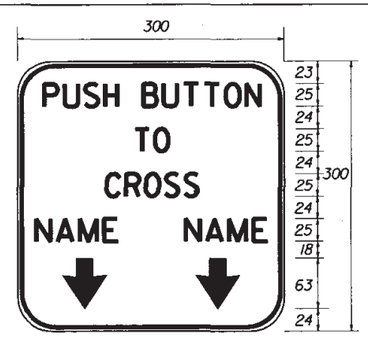

Series D Letters

FTP - 48

300 x 300

13 Border 38 Radii

Color
Background White
Legend & Border Black

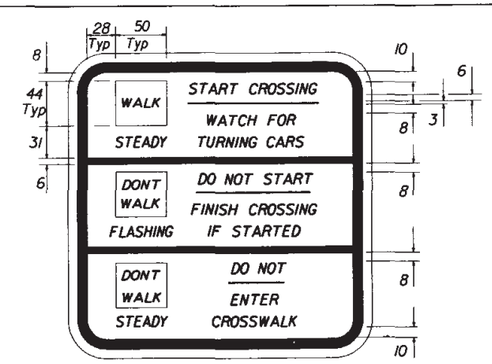

Series C Letters

FTP - 49

300 x 300

12 Border 38 Radii

Color
Background White
Legend & Border Black

Notes for FTP 49:

1. Text for FTP 49 shall be 13 mm except (WALK) and (DONT WALK) which will be 11 mm.
2. Spacing between lines of legend shall be 8 mm except as noted.
3. Underbar spacing as detailed.

STATE OF FLORIDA DEPARTMENT OF TRANSPORTATION
ROAD DESIGN

SPECIAL SIGN DETAILS

	Names	Dates
Designed By		
Drawn By		
Checked By		

Approved By: Clark A. Scott

Revision No.	Sheet No.	Index No.
94	6 of 8	17355

F.H.W.A. Approved:

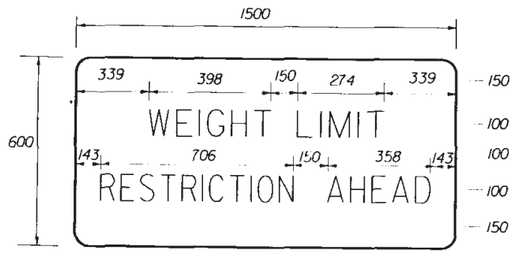

FTP - 50 100 Series C

600 X 1500

19 Border 100 Radii

Color
Background Yellow
Legend & Border Black

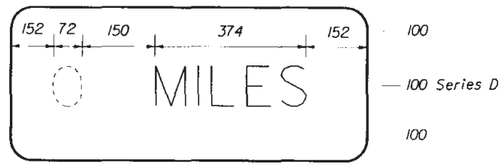

FTP - 51

300 x 900

19 Border 100 Radii

Color
Background White
Legend & Border Black

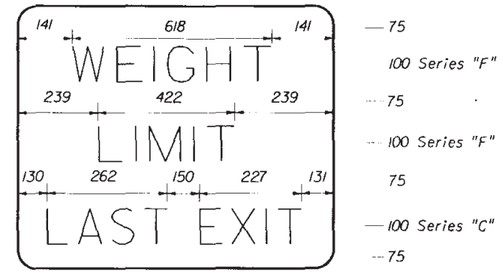

FTP - 52

600 x 900

19 Border 100 Radii

Color
Background White
Legend & Border Black

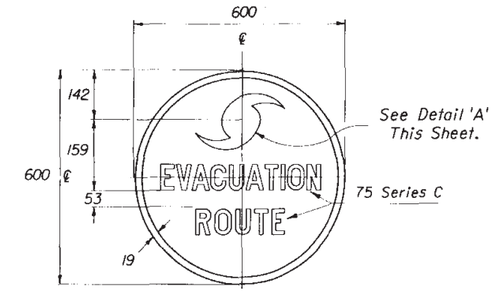

FTP - 53

600 x 600

Color
Background Blue
Legend & Border White

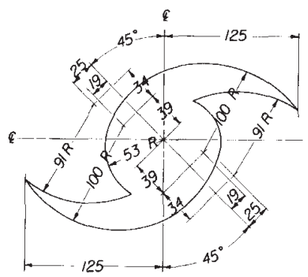

DETAIL 'A' for FTP - 53

Color
Legend & Border White

STATE OF FLORIDA DEPARTMENT OF TRANSPORTATION
ROAD DESIGN

SPECIAL SIGN DETAILS

	Names	Dates
Designed By		
Drawn By		
Checked By		

Approved By Clark A. Scott

Revision No.	Sheet No.	Index No.
94	7 of 8	17355

F.H.W.A. Approved:

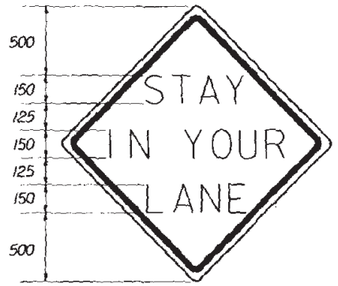

Series C Letters

MOT - 1

1200 x 1200

25 Border 75 Radii

Color
Background Orange
Legend & Border Black

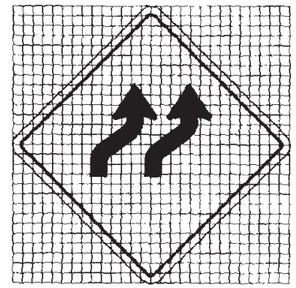

GRID = 50 X 50

MOT - 2

1200 x 1200

25 Border 75 Radii

Color
Background Orange
Legend & Border Black

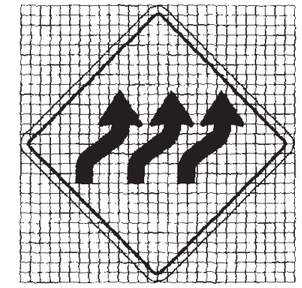

GRID = 50 X 50

MOT -3

1200 x 1200

25 Border 75 Radii

Color
Background Orange
Legend & Border Black

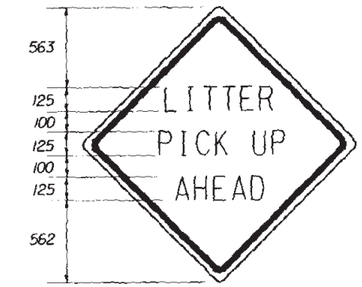

Series C Letters

MOT - 4

1200 x 1200

25 Border 75 Radii

Color
Background Orange
Legend & Border Black

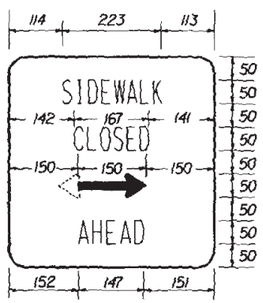

Series B Letters

MOT -5

450 x 450

10 Border 38 Radii

Color
Background Orange
Legend & Border Black

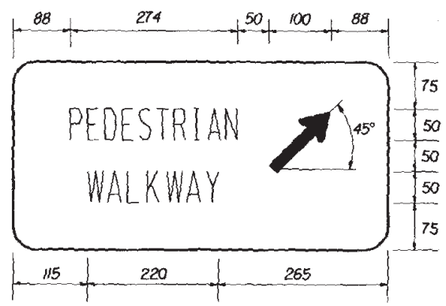

Series B Letters

MOT -6

300 x 600

10 Border 38 Radii

Color
Background Orange
Legend & Border Black

For MOT-6L shift arrow to left side of sign.

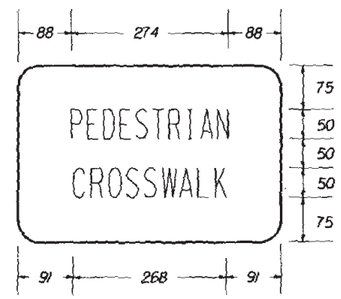

Series B Letters

MOT - 7

300 x 450

10 Border 38 Radii

Color
Background Orange
Legend & Border Black

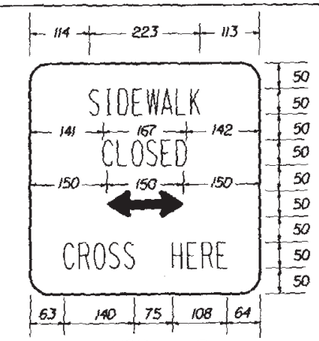

Series B Letters

MOT - 8

450 x 450

10 Border 38 Radii

Color
Background Orange
Legend & Border Black

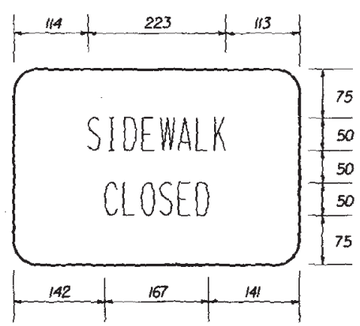

Series B Letters

MOT -9

300 x 450

10 Border 38 Radii

Color
Background Orange
Legend & Border Black

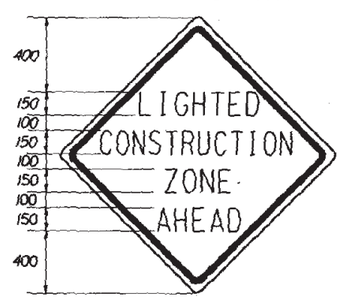

Series C Letters

MOT -10

1200 x 1200

10 Border 75 Radii

Color
Background Orange
Legend & Border Black

STATE OF FLORIDA DEPARTMENT OF TRANSPORTATION
ROAD DESIGN

SPECIAL SIGN DETAILS

	Names	Dates	Approved By Clark A. Scott		
Designed By					
Drawn By					
Checked By			Revision No.	Sheet No.	Index No.
F.H.W.A. Approved:			94	8 of 8	17355

Notes :

1. Bottom edge of signs shall be approximately at the same elevation.
2. Span wire installations that support only signs should be provided with a minimum panel weight of 34 kg/m².
3. Type B & C attachments with one hanger shall have wind beams for signs wider than 1.0 m. The beams shall extend to within 150 mm of the sign edge.
4. Type B & C attachments for signs 1.2 m and wider shall have 2 hangers. Signs 2.1 m and wider shall have wind beams that extend to within 150 mm of the sign edge.
5. Type D attachments shall be for signs 1.0 m wide or less.
6. Sign panels shall meet the requirements of Index 9535.
7. Refer to section 634 of the Standard Specifications For Road And Bridge Construction.
8. All bolts, nuts, and washers shall be passivated stainless steel, AISI 300 series, commercial grade, type 316.

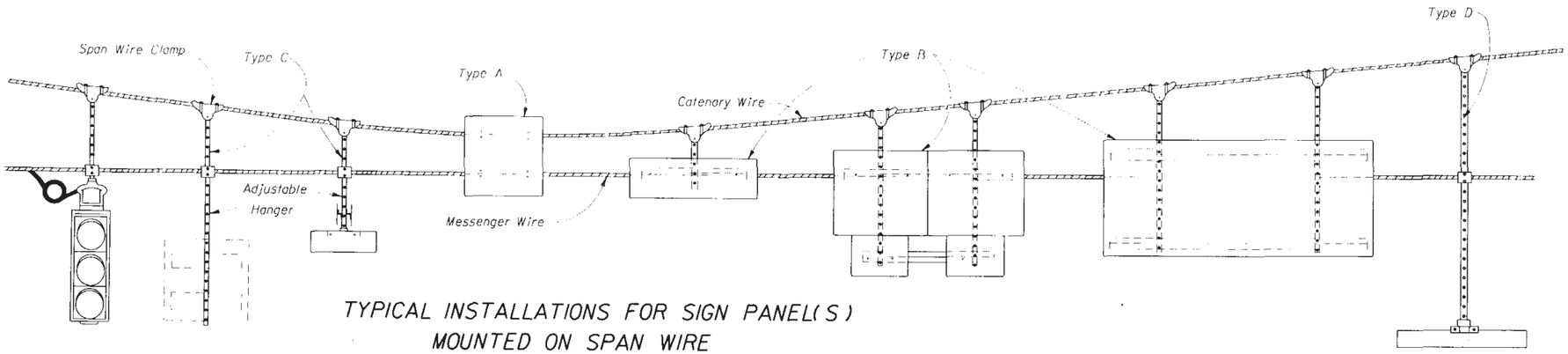

TYPICAL INSTALLATIONS FOR SIGN PANEL(S) MOUNTED ON SPAN WIRE

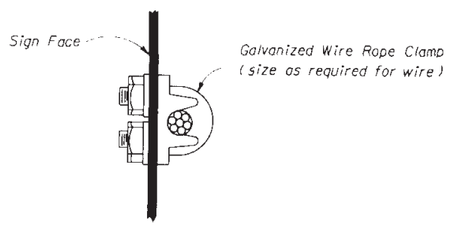

DETAIL OF SIGN CLAMP

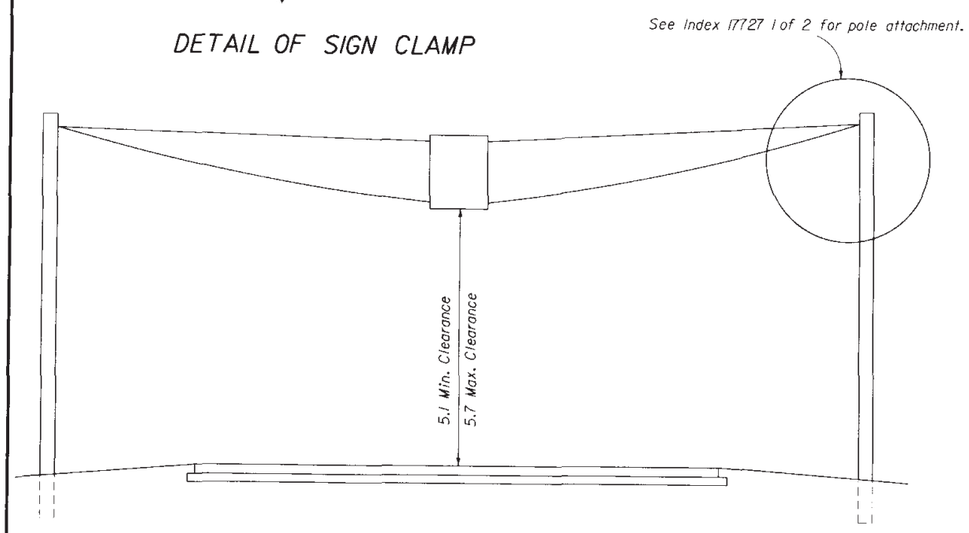

TYPICAL SPAN WIRE INSTALLATION

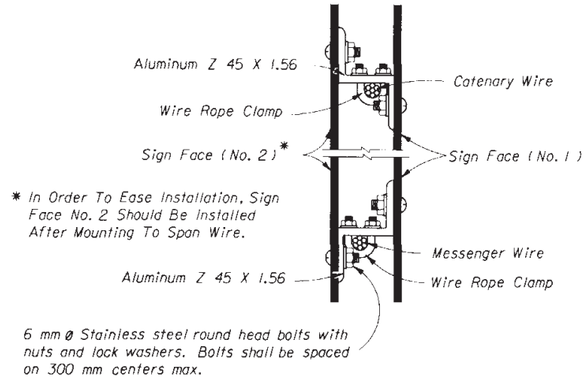

* In Order To Ease Installation, Sign Face No. 2 Should Be Installed After Mounting To Span Wire.

The overlapped connection of adjustable hangers shall use a minimum of 2 bolts with a minimum spacing between bolts of 50 mm.

DETAIL OF OPPOSING SIGNS SPAN WIRE MOUNTED

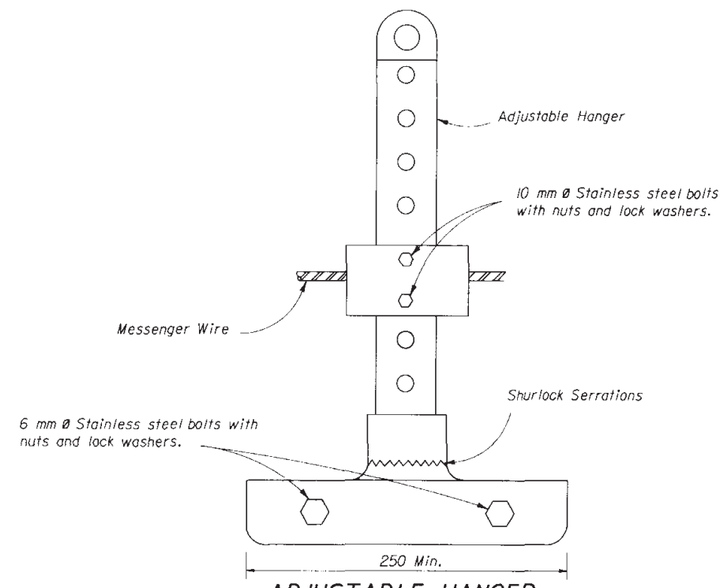

ADJUSTABLE HANGER FOR SIGN MOUNTING

SINGLE POINT ATTACHMENT

STATE OF FLORIDA DEPARTMENT OF TRANSPORTATION
ROAD DESIGN

SPAN WIRE MOUNTED SIGN DETAILS

	Names	Dates
Designed By		
Drawn By		
Checked By		
F.H.W.A. Approved:		

Approved By Clark A Scott
State Traffic Plans Engineer

Revision No.	Sheet No.	Index No.
94	1 of 2	17356

Notes : 1. Bottom edge of signs shall be approximately at the same elevation.

2. Type B & C attachments with one hanger shall have wind beams for signs wider than 1.0 m. The beams shall extend to within 150 mm of the sign edge.

3. Type B & C attachments for signs 1.2 m and wider shall have 2 hangers. Signs 2.1 m and wider shall have wind beams that extend to within 150 mm of the sign edge.

4. Type D attachments shall be for signs 1.0 m wide or less.

5. Sign panels shall meet the requirements of Index 9535.

6. Refer to section 634 of the Standard Specifications For Road And Bridge Construction.

7. All bolts, nuts, and washers shall be passivated stainless steel, AISI 300 series, commercial grade, type 316.

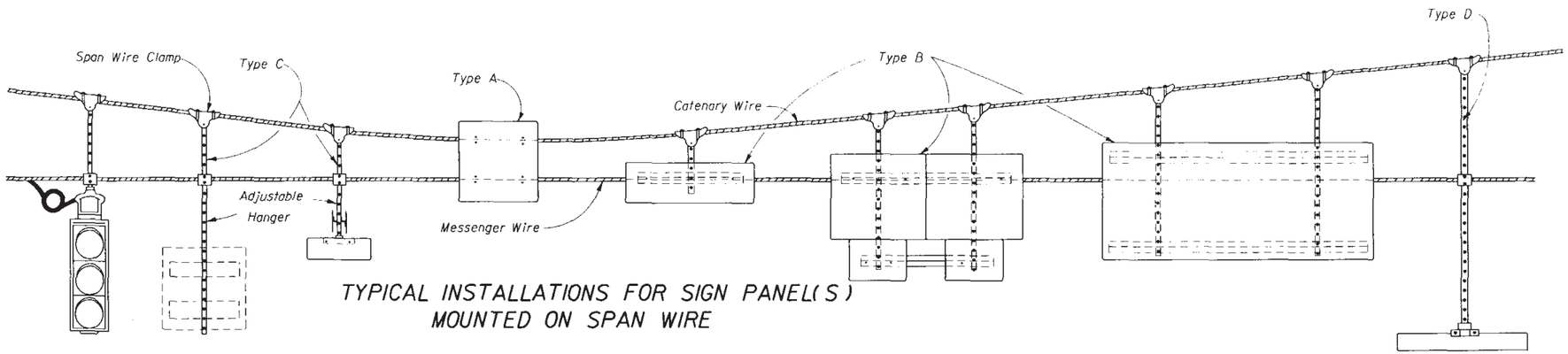

TYPICAL INSTALLATIONS FOR SIGN PANEL(S) MOUNTED ON SPAN WIRE

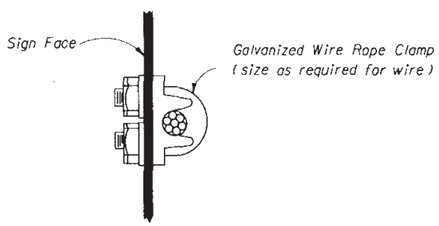

DETAIL OF SIGN CLAMP

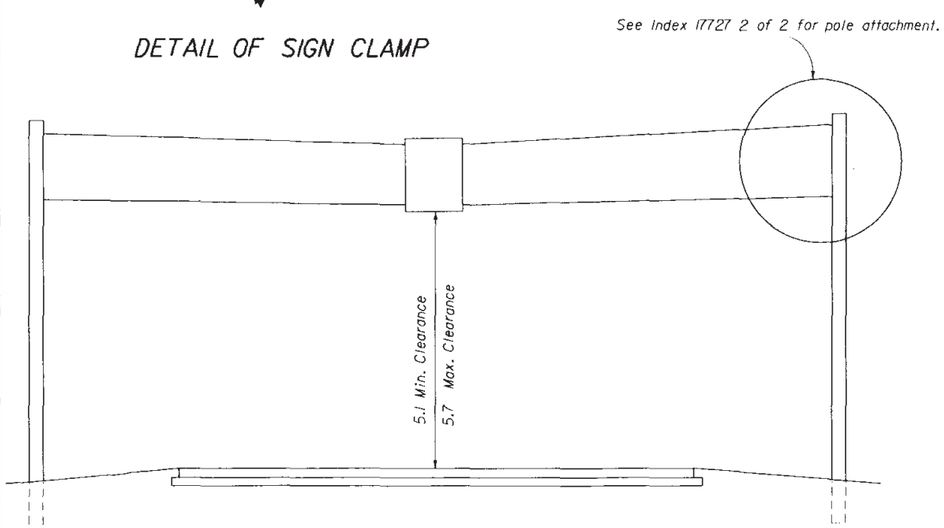

TYPICAL SPAN WIRE INSTALLATION

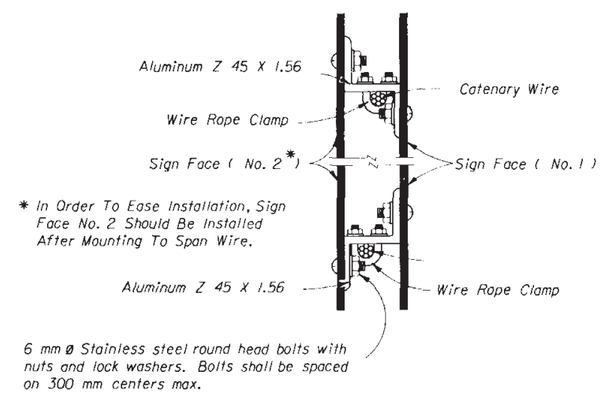

The overlapped connection of adjustable hangers shall use a minimum of 2 bolts with a minimum spaceing between bolts of 50 mm.

DETAIL OF OPPOSING SIGNS SPAN WIRE MOUNTED

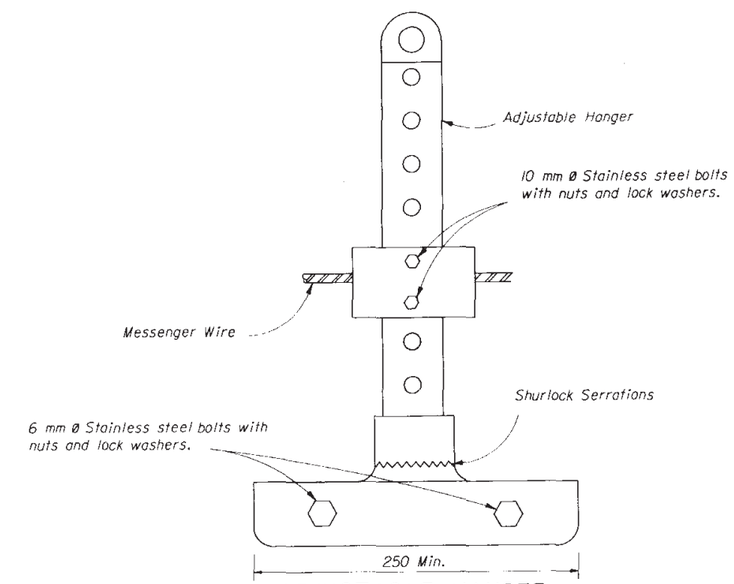

ADJUSTABLE HANGER FOR SIGN MOUNTING

TWO POINT ATTACHMENT

STATE OF FLORIDA DEPARTMENT OF TRANSPORTATION
ROAD DESIGN

SPAN WIRE MOUNTED SIGN DETAILS

	Names	Dates
Designed By		
Drawn By		
Checked By		
F.H.W.A. Approved:		

Approved By Clark A. Scott
State Traffic Plans Engineer

Revision No.	Sheet No.	Index No.
94	2 of 2	17356

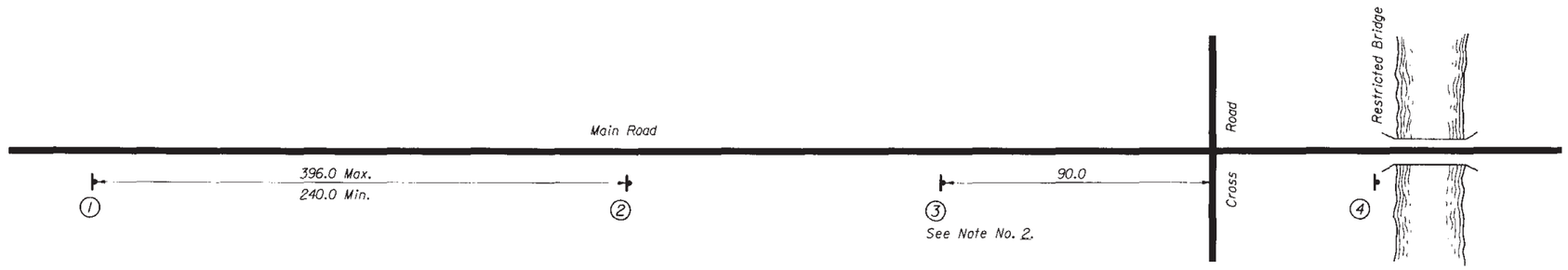

SIGN LOCATIONS TYPICAL

1

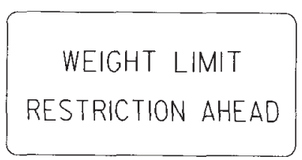

FTP - 50

2

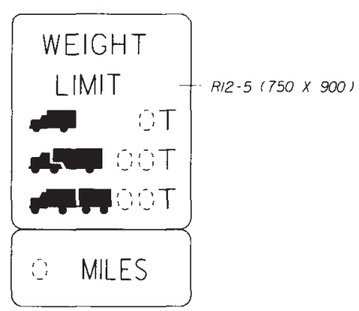

FTP -51

3

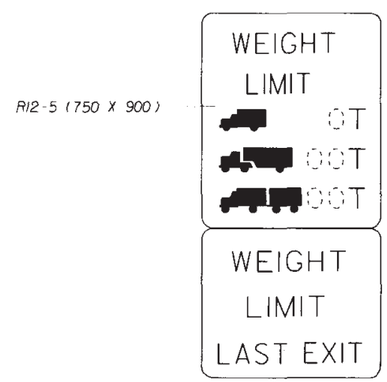

FTP - 52

4

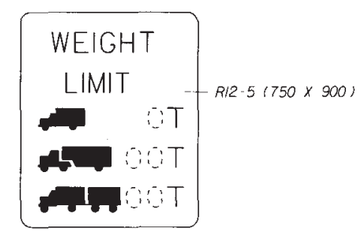

NOTE:

1. See Standard Highway Signs dated 1979 for sign R12-5 detail.
2. Sign location No. 3 may require some field adjustment.
3. Signs FTP-50, FTP-51 & FTP-52 shall have a 13 mm edge and 19 mm border with a 100 mm radius.
4. The Cross Road is the last detour around the restricted bridge.
5. Sign location No. 2 should be established from the Cross Road the following approximate distances; Interstate - 1.61 kilometer Non-Interstate - 0.8 kilometer
6. See Index 17355 for sign details.

STATE OF FLORIDA DEPARTMENT OF TRANSPORTATION
ROAD DESIGN

BRIDGE WEIGHT RESTRICTIONS

	Names	Dates
Designed By		08/86
Drawn By		08/86
Checked By		08/86

Approved By Clark A Scott
State Traffic Plans Engineer

F.H.W.A. Approved:	Revision No.	Sheet No.	Index No.
	94	1 of 1	17357

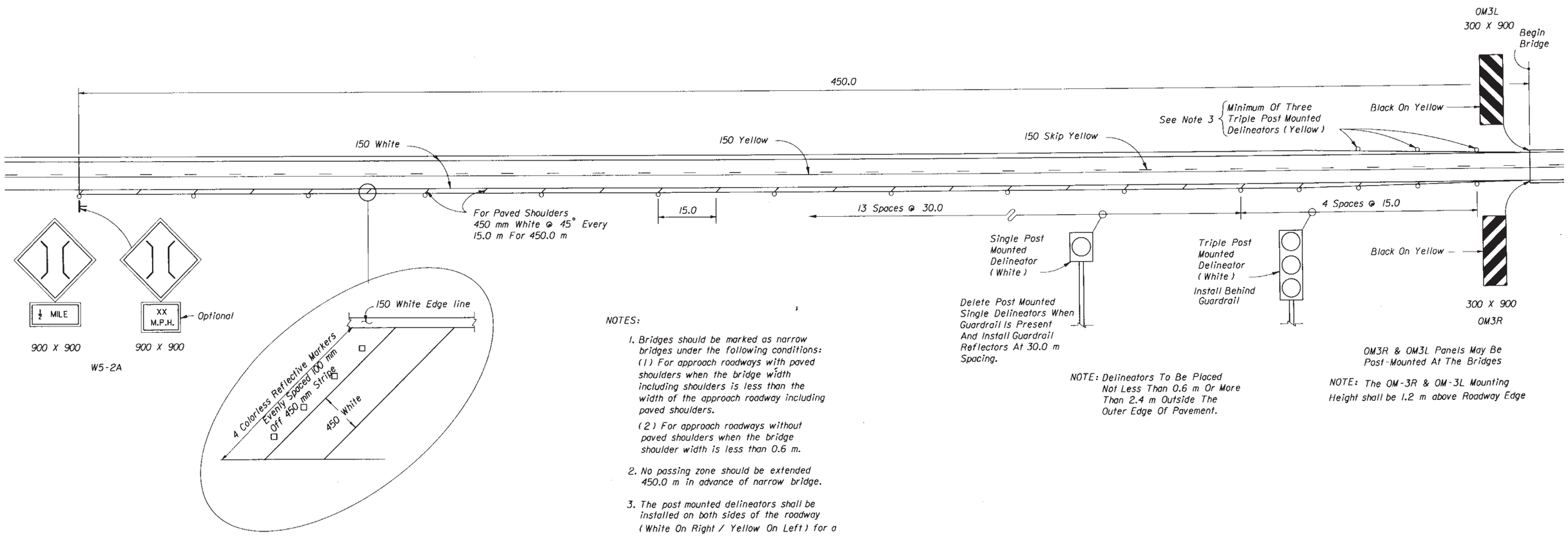

NOTES:

1. Bridges should be marked as narrow bridges under the following conditions:
   (1) For approach roadways with paved shoulders when the bridge width including shoulders is less than the width of the approach roadway including paved shoulders.
   (2) For approach roadways without paved shoulders when the bridge shoulder width is less than 0.6 m.
2. No passing zone should be extended 450.0 m in advance of narrow bridge.
3. The post mounted delineators shall be installed on both sides of the roadway (White On Right / Yellow On Left) for a distance of 450.0 m in advance of a narrow bridge if the bridge or the approach is on a curve.
4. Delineators on both sides of roadway shall face traffic approaching bridge.

STATE OF FLORIDA DEPARTMENT OF TRANSPORTATION
ROAD DESIGN

RURAL NARROW BRIDGE TREATMENT

	Names	Dates
Designed By		9/86
Drawn By		9/86
Checked By		9/86
F.H.W.A. Approved:		

Approved By Clark A. Scott
State Traffic Plans Engineer

Revision No.	Sheet No.	Index No.
94	1 of 1	17359

JOINT USE POLES

1. The Luminaire And Arm Shall Be Grounded
2. The Surge Protector And Fuses Shall Be Installed And Located In A Lockable Nema 3R Box (Sized By The Contractor) Attached To The Side Of The Pole

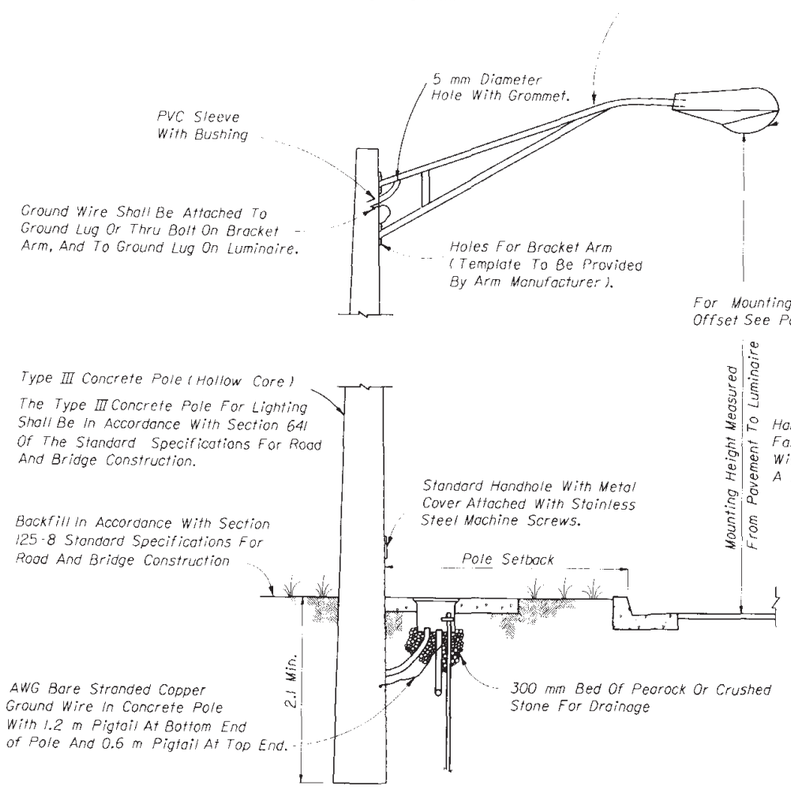

CONCRETE POLE DETAIL

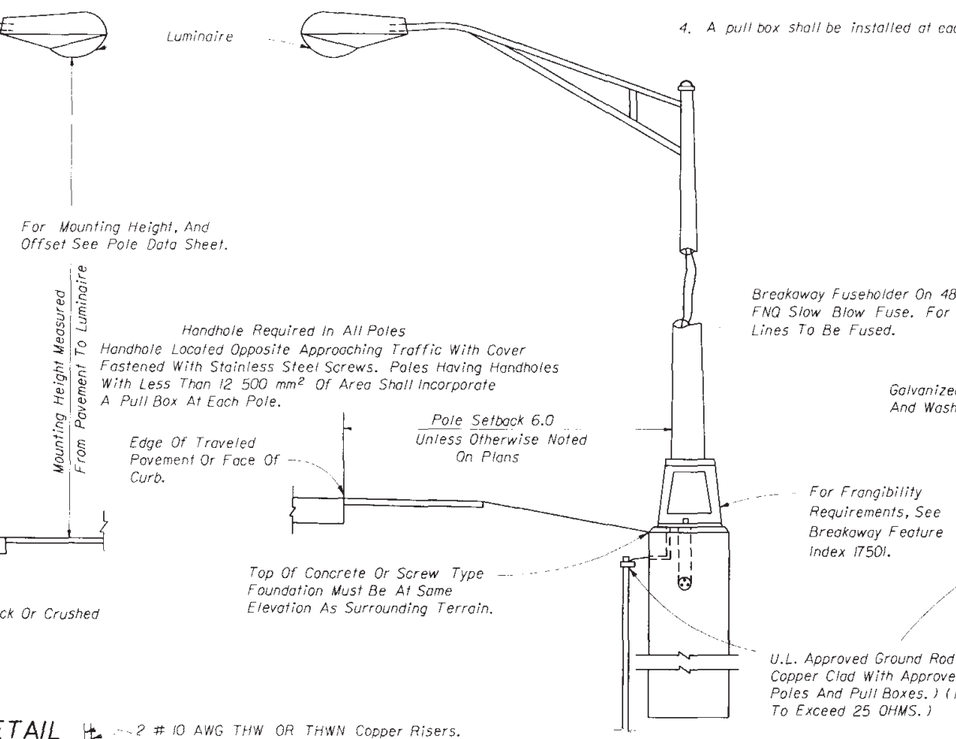

METAL POLE DETAIL

Notes :

1. Luminaire shall be supplied with a magnetic regulator type ballast.
2. The ballast shall be mounted on a hinged door or panel. The unit shall swing open to provide access to the ballast assembly by release of captive screws. The electrical connector shall be a quick disconnect plug. The unit shall be easily removed from the luminaire after release of the captive screws and quick disconnect plug.
3. Allow enough slack in wires to permit fuse holders, surge protectors, and splices to be handled three hundred millimeters outside pole or pull box.
4. A pull box shall be installed at each concrete pole location.
5. All mounting heights are ± 750 mm unless otherwise noted in plans.
6. At All Pull Boxes And Pole Bases, Ends Of Conduit Shall Be Sealed in Accordance With Section 630 Of The Standard Specifications For Road And Bridge Construction.

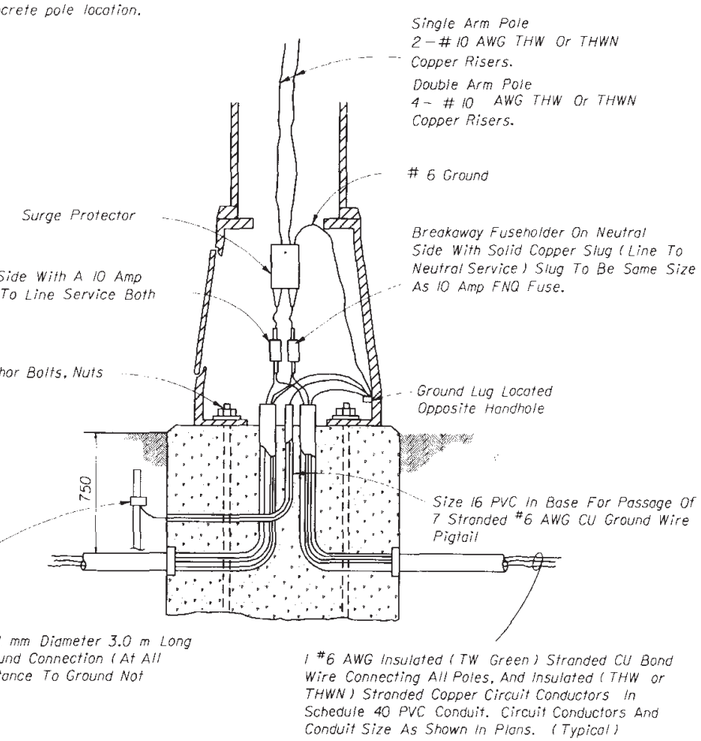

METAL POLE WIRING DETAIL

SURGE PROTECTOR SPECIFICATIONS

1. The unit shall withstand a surge current up to 20,000 Amps, and repetitive surges of 200 Amps for a minimum of 10,000 occurences.
2. The unit shall respond in less than 50 nanoseconds and within this time have a peak clamping voltage better than 1,100 Vrms.
3. The maximum allowable voltage that can pass continuously through the hot leg of the protector must be less than 550 Vrms.
4. The current drain shall be less than 100 microamps.
5. The unit shall be insulated 600 V. to ground and shall be weatherproof.
6. The unit shall not allow holdover current or conduction to ground after the surge ends.
7. Protection shall be achieved for both the 480 V. and neutral conductors with the surges being passed to ground and NOT to neutral.
8. There shall be no discharge lag in the protection of the 480 V. conductor over the neutral conductor.
9. Underwriters Laboratory approval not required.

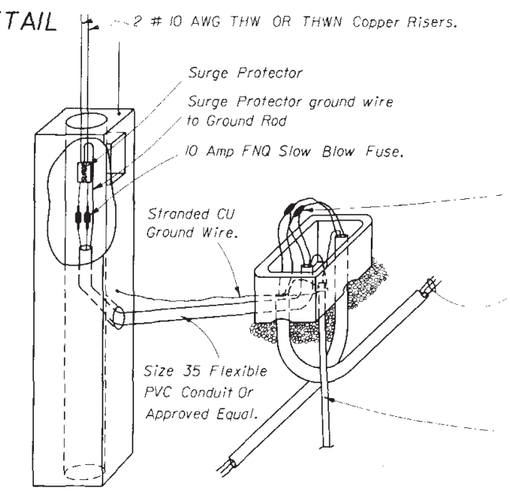

CONCRETE POLE WIRING DETAIL

All Splices Shall Be Made In Pull Boxes Only With Compression Sleeves Or Split Bolt Connectors, Properly Taped And Waterproofed.

1 #6 AWG Insulated (TW Green) Stranded CU Bond Wire Connecting All Poles, And Insulated (THW or THWN) Stranded Copper Circuit Conductors In Schedule 40 PVC Conduit. Circuit Conductors And Conduit Size As Shown In Plans. (Typical)

Pull boxes should be located 0.6 m max. from concrete pole unless otherwise directed by the project engineer.

U.L. Approved Ground Rod 14.22 mm Diameter 3.0 m Long Copper Clad (At All Poles And Pull Boxes.) (Resistance To Ground Not To Exceed 25 OHMS.)

STATE OF FLORIDA DEPARTMENT OF TRANSPORTATION
TRAFFIC DESIGN

CONVENTIONAL POLE DETAILS

	Names	Dates	Approved By
Designed By		08/78	Clark A. Hecht State Traffic Plans Engineer
Drawn By			
Checked By			Revision No. 94 · Sheet No. 1 of 1 · Index No. 17500
F.H.W.A. Approved:			

1) Ground rods shall have a resistance to ground not to exceed 25 ohms. Where the resistance is greater than 25 ohms, two or more ground rods connected in parallel shall be used. Contractor shall have necessary test equipment (current calibration certificate required) at final inspection to ensure acceptability of grounding system. Total grounding system not to exceed 10 ohms. See note 23.

2) The contractor shall be responsibile for contacting all utility companies prior to any underground work. The utility company will locate and identify their facilities.

3) Contractor shall determine the service required date for the power company transformer installation at the pre-construction conference.

4) The power company reserves the right to install the riser, switch gear and weatherhead on power company poles at the expense of the contractor. Contact the power company for cost or for authorization for an alternate procedure.

5) Any damaged portions of galvanized steel poles and bracket arms shall be painted in accordance with section 562 of the Standard Specifications.

6) Poles and bracket arms shall be designed in accordance with the design criteria, as indicated in the plans and using the applicable equations found in "Standard Specifications For Structural Supports For Highway Signs, Luminaires And Traffic Signals" published by A.A.S.H.T.O. dated 1985. The calculations shall be based on the actual projected area of the luminaire or 0.28 square meters whichever is greater.

7) The luminaire manufacturer shall place a permanent tag on the luminaire housing on which is imprinted the following information : Wattage, ballast type, lamp shown on design plans, lamp setting (position of luminaire), IES light distribution with this lamp in the position specified, input voltage and power factor. Luminaire photometric submittals required.

8) Before final acceptance, contractor shall provide 2 sets of full size as built plans to the maintaining agency.

9) Conduit routing shall be pole to pole, maintaining pole setback distance from edge of pavement. Any cable routing in locations where guardrail is proposed shall be 0.6 meters in front of the standard guardrail position.

10) Pole positions and conduit routing may be adjusted, as approved by the Engineer, to prevent conflicts with utility and drainage structures not indicated, and prevent guardrail post conflict with underground lighting circuits.

11) Where guardrail is constructed, the poles shall be placed a minimum of 1.2 meters behind the face of the guardrail.

12) Pole foundation installations shall be backfilled to the top of the foundation, compacted to a firm, stable condition approximately equal to that of the adjacent soil. The fill shall conform to existing grade and be fully sodded.

13) The wires at the pole handhole and pullboxes shall be looped up in the pole and pullboxes with sufficient length to completely remove connectors to the outside of handhole and pullboxes to make connectors accessible for changing fuses and trouble shooting the system.

14) Neutral wires to have white insulation. Do not use white or green insulated wires for ungrounded conductors.

15) Unless otherwise specified, all cable shall be single conductor, 98 percent conductivity stranded copper, with THW or THWN insulation.

16) All splices shall be made in pullboxes or the pole base. No splices shall be made inside the conduit.

17) All exposed or surfaced mounted conduit shall be rigid or intermediate metal. These exposed runs of conduit shall be provided with either expansion joints or flexible metal conduit sections adequate to take care of vibrations and thermal expansions. All metal conduit shall be grounded. Steel conduit shall be hot dipped galvanized.

18) All conduit that will remain empty as spares shall be mandrel tested, cleaned inside and both ends capped. Leave the corrosion resistant pull/drag wire and place duct markers, or pullboxes to mark the location of the ends of the conduits.

19) Pull boxes shall be located at ends of conduit crossing roadways, and as necessary for the completion of the project.

20) These plans represent minimum acceptable criteria. The inspection per these drawings represent the minimum base of acceptance.

21) All material, unless otherwise specified, shall be underwriters laboratory approved.

22) Pull boxes shall meet the requirements of section 635 "Standard Specifications For Road And Bridge Construction" and section 635 "Minimum Specifications For Traffic Control Signals And Devices".

23) All grounding system connections shall be exothermically welded. This includes all cable connections, ground rod connections, rod to rod connections, and splices.

BREAKAWAY FEATURE

All conventional mounting height poles shall be mounted on a frangible metal base or system of breakaway couplings. If couplings are used, one coupling shall be provided for each anchor bolt connection. The only continuous connection of the pole to the foundation at each anchor bolt shall be provided by the couplings. The area between the top of the pole foundation and the base of the pole including the couplings shall be enclosed with a non-structural aluminum skirt.

If a frangible metal base is used, it shall be one piece and be designed to breakaway without the aid of any slipping or sliding surfaces.

"The design of the breakaway feature shall be in accordance with the breakaway performance requirements of the 'Standard Specifications for Structural Supports for Highway Signs, Luminaires and Traffic Signals'. A. A. S. H. T. O. , Copyright 1985. The contractor (supplier) shall submit copies of test reports as evidence the breakaway feature meets the above specifications and calculations to verify the design will meet the A. A. S. H. T. O. wind loading specified in the contract plans. No poles are to be installed prior to approval of submittal data."

Poles behind bridge rail or barrier wall mounted, shall be non-frangible.

STATE OF FLORIDA DEPARTMENT OF TRANSPORTATION
TRAFFIC DESIGN

HIGHWAY LIGHTING GENERAL NOTES

	Names	Dates
Designed By		04/25/18
Drawn By		
Checked By		

Approved By
State Traffic Plans Engineer

Revision No.	Sheet No.	Index No.
94	1 of 1	17501

F.H.W.A. Approved:

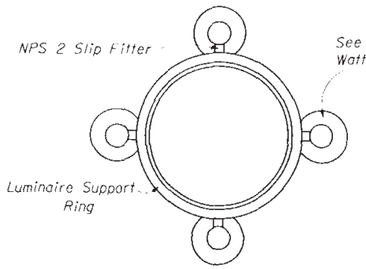

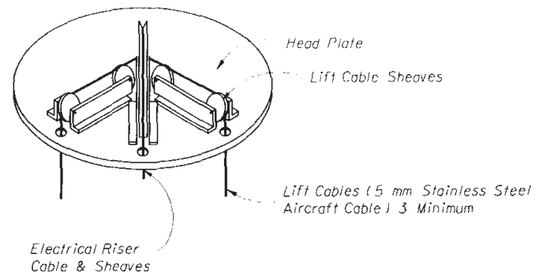

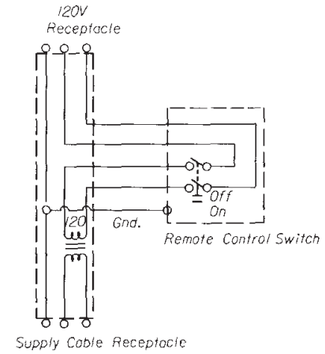

SCHEMATIC OF REMOTE AUXILIARY POWER UNIT

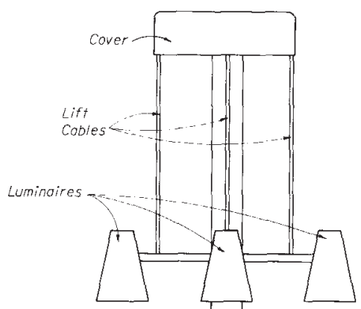

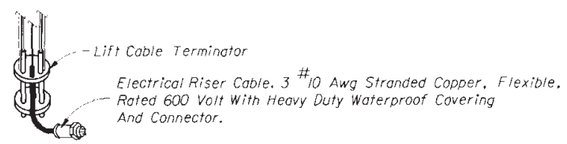

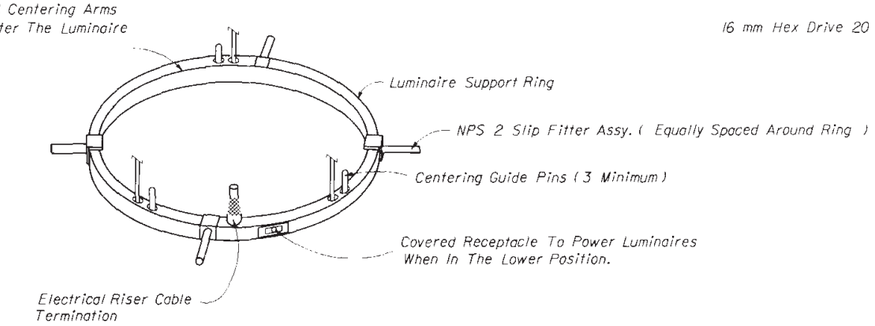

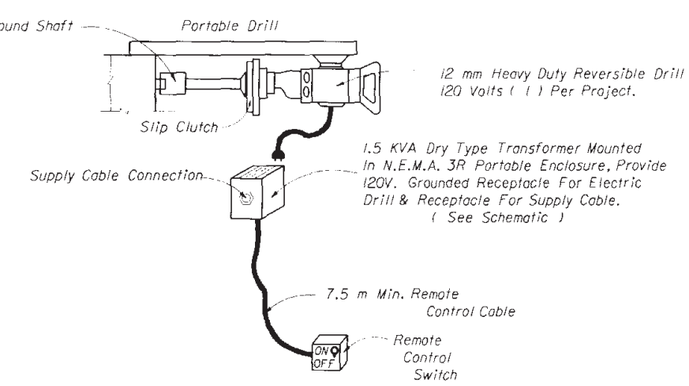

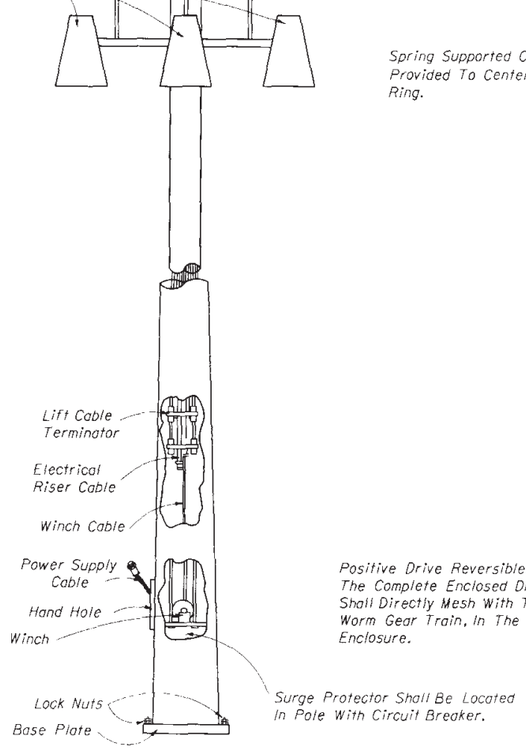

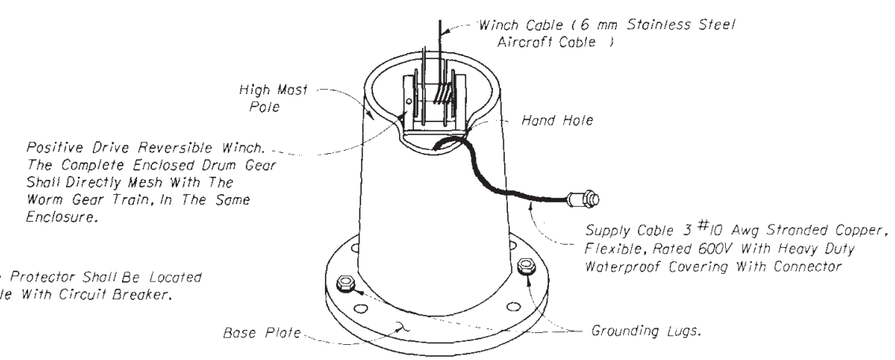

STATE OF FLORIDA DEPARTMENT OF TRANSPORTATION
TRAFFIC DESIGN

HIGHMAST LIGHTING DETAILS

	Names	Dates	Approved By
Designed By			C. Lark A. Scott
Drawn By			
Checked By			
F.H.W.A. Approved:			

Revision No.	Sheet No.	Index No.
94	1 of 3	17502

LUMINAIRE SPECIFICATIONS

The reflector with its aluminum cover shall be firmly attached to a cast ring. This ring shall have keyhole slots in its upper surface such that the reflector/refractor assembly may be readily attached to, or detached from, the luminaire bracket entry and lamp support assembly without completely removing the support bolts.

Each luminaire shall contain an integral auto-regulator type ballast connected for 480 volts input ± 10% and a power factor of more than 90 %. The luminaire ballast shall be enclosed within an aluminum housing which integrally attaches to the luminaire bracket entry and lamp support assembly. It shall be readily removable without removing the luminaire from the bracket arm.

The luminaire shall be attached to the bracket arm by means of a bracket entry and lamp support assembly. The assembly shall include a side entry slipfitter designed for two NPS 2 pipes with provision for 3° adjustment for leveling the luminaire. An enclosed terminal block shall be included such that all electrical connections shall be protected from exposure to weather.

All electrical connections shall be made waterproof or be made inside a weather resistant enclosure. All luminaires shall be ANSI/IES light distribution as indicated in plans. Each luminaire shall be labeled with a permanent label which states the type of lamp, voltage input, power input, power factor, ballast type, socket position, ANSI/IES light distribution, and such other catalog information that a complete replacement can be readily ordered.

The contractors attention is directed to those plan sheets detailing the mounting of luminaires at the pole top. Particular attention is directed to alignment of luminaire light distributions. Special attention must be exercised in the physical alignment of these luminaires to ensure that the approved photometric layout is physically produced at each lighting standard in the field. A marking shall be placed on the external face of the refractor to allow visual inspection of alignment. The marking shall correspond to the 0° axis of the refractor.

FOOTING

The high mast foundations shall be constructed in accordance with the details shown in the plans.

Anchor bolts per manufacturers Specifications. Submittals shall be supplied to the engineer of record prior to purchase.

One leveling nut, one hold-down nut, and one locking/jam nut shall be supplied per anchor bolt. All small metal parts, (nuts, screws, washers, etc.) shall be rustproofed either by galvanizing per ASTM A143 or by the nature of the material used in their fabrication.

LOWERING SYSTEM SPECIFICATIONS

The lowering system shall consist of the following:

A. Head frame and cover
B. Luminaire ring
C. Cables
D. Winch
E. Portable power unit (1 per project)

The head frame unit shall rigidly mate the top of the pole to the head frame platform. The platform with its associated sheaves, etc. shall be covered and raintight. The head frame structure shall be zinc coated steel, attached to the pole by means of a steel slipfitter. Head frame shall encompass six 125 millimeter nominal steel cable sheaves grooved to the exact cable diameter, for 180° cable bearing surface. The sheave shall be zinc electroplated to ASTM 164 and dipped in yellow chromate for corrosion resistance. Bearings and cable keepers shall have permanent lubrication. Three (3) stainless steel 7 x 19 aircraft cables of 5 millimeters or greater diameter shall be provided.

The power riser cable shall be attached to the luminaire ring with a waterproof connector capable of withstanding the pull of the weight of the power riser cable. Where the wire ropes are required to bend over sheaves or over the winch drum, the maximum working stress in the outer fibers of wire rope shall not exceed 20 % of the wire rope manufacturer's rated ultimate stress.

Drum design shall cause level wind of wire rope. The power cord shall travel on sheave (s) or a combination of rollers providing a radius for the cord of 150 millimeters or larger. Each end of the sheave (s) or rollers shall have a keeper to prevent the cable from jumping out of the roller track.

The head frame shall also include three (3) latching devices to support the luminaire ring assembly when the lowering device is not in operation. The latches shall be actuated by alternate raising and lowering of the hoisting cables. Locking of luminaire ring shall be signaled by indicators visible from ground. All moving parts of the latch mechanism shall be serviceable from the ground. Each of the three latches shall be strong enough, by itself, to support twice the weight of the ring and all the luminaires. Latching mechanisms which depend primarily upon spring operation or contain dissimilar metals are not acceptable. The latching mechanism shall not require adjustment after the original installation.

The luminaire ring shall be constructed of a minimum of 150 mm x 50 mm x 7 mm steel channel galvanized in accordance with ASTM A123 Class "B" steel channel with the appropriate number of NPS 2 steel pipe mounting arms. The luminaire ring shall be prewired with Type "W" or specially reinforced Type "SO" power cable with suitable conductor quantity and size for proper operation and Type "ST" distribution wiring with insulation suitable for at least 105°C. All power cables should be attached to the aluminum weathertight wiring chamber with weathertight cable connectors. A 600 volt terminal block, completely prewired shall be included in the weathertight wiring chamber. A weather-tight twistlock power inlet shall be provided on the luminaire ring to allow testing of the luminaire while in the lowered position. The power inlet shall face away from the pole for easy access.

The ultimate support of the luminaire ring shall not be dependent upon the lowering and raising cables.

The system shall be provided with circuit-breaker switches and twistlock disconnects in the pole base. Raising speed of luminaire ring shall be a minimum of 4 meters per minute.

The winch shall be a reversible worm gear self locking type with an integral friction drag brake to prevent freespooling. The winch shall be designated for hand operation or for operation by means of a 12 mm heavy duty reversing electric drill motor, remote controlled to enable the operator to stand 7 meters from the pole, Stainless Steel 7 x 19 aircraft cables of 6 mm or greater diameter equal to MIL-W-5424 shall be supplied on the winch. The winch shall be provided with keepers above the drum to force the cable away from the ends of the drum for spooling. The drum shall have a wire guard to prevent the cable from coming off.

The winch shall be mounted in such a way that the cable terminator and the riser cable connector may be reached and worked on by a person with his arm through the handhole.

Roller contact spring-loaded centering arms shall be provided to center the luminaire ring while ascending or descending the pole. The rollers for the centering arm shall be made of a water resistant non-marking composition material. All shafts and washers shall be #304 stainless steel. The spring-loading mechanism shall consist of an oil-tempered steel compression spring over an aluminum rod. The rollers shall be in contact with the pole at all times.

POLE SPECIFICATIONS

The pole shaft may be jointed or single piece, polygon or round, high strength steel having a minimum yield strength of 345 MPa. All material shall be single thickness steel plate with no laminations. Steel shall be as specified.

All poles shall be equipped with a reinforced handhole approximately 300 millimeters above the base plate. The handhole shall be 250 millimeters wide by 500 millimeters high minimum.

All poles and hardware will be adequately packed to assure protection to the finish during shipping and handling, poles shall not be shipped preassembled.

Drawings shall be provided with the equipment which show assembly sequence, lift point, and recommended erection procedure. A permanent decal or card shall be fixed on the inside of the handhole cover which describes the sequence for lowering the luminaires and the cautions.

The proportioning of weld details and the operation of welding shall be in accordance with the current edition of the AASHTO Standard Specifications for Welding of Structural Steel Highway Bridges, and The Referenced American Welding Society Structural Welding Code.

Shop drill two (2) 16 millimeter diameter holes 180 degrees apart through total thickness of base plate. Tap top of hole for 16 mm x 20 mm II NC stainless steel hex head bolt.

Finished poles shall have a protective coating of hot galvanizing applied in accordance with ASTM A123.

Note : It is the responsibility of the contractor to coordinate the anchor bolt design with foundation design.

STATE OF FLORIDA DEPARTMENT OF TRANSPORTATION
TRAFFIC DESIGN

HIGHMAST LIGHTING DETAILS

	Names	Dates
Designed By		08/18
Drawn By		
Checked By		
F.H.W.A. Approved:		

Approved By Clark A Scott
State Traffic Plans Engineer

Revision No.	Sheet No.	Index No.
94	2 of 3	17502

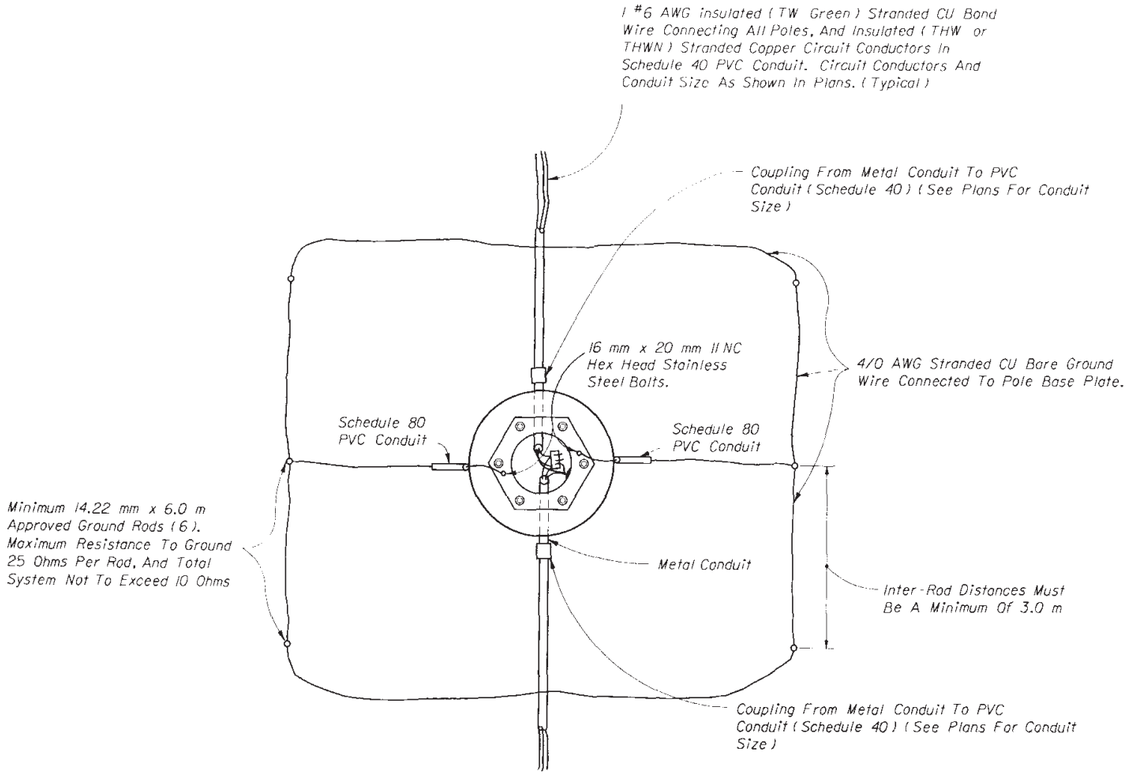

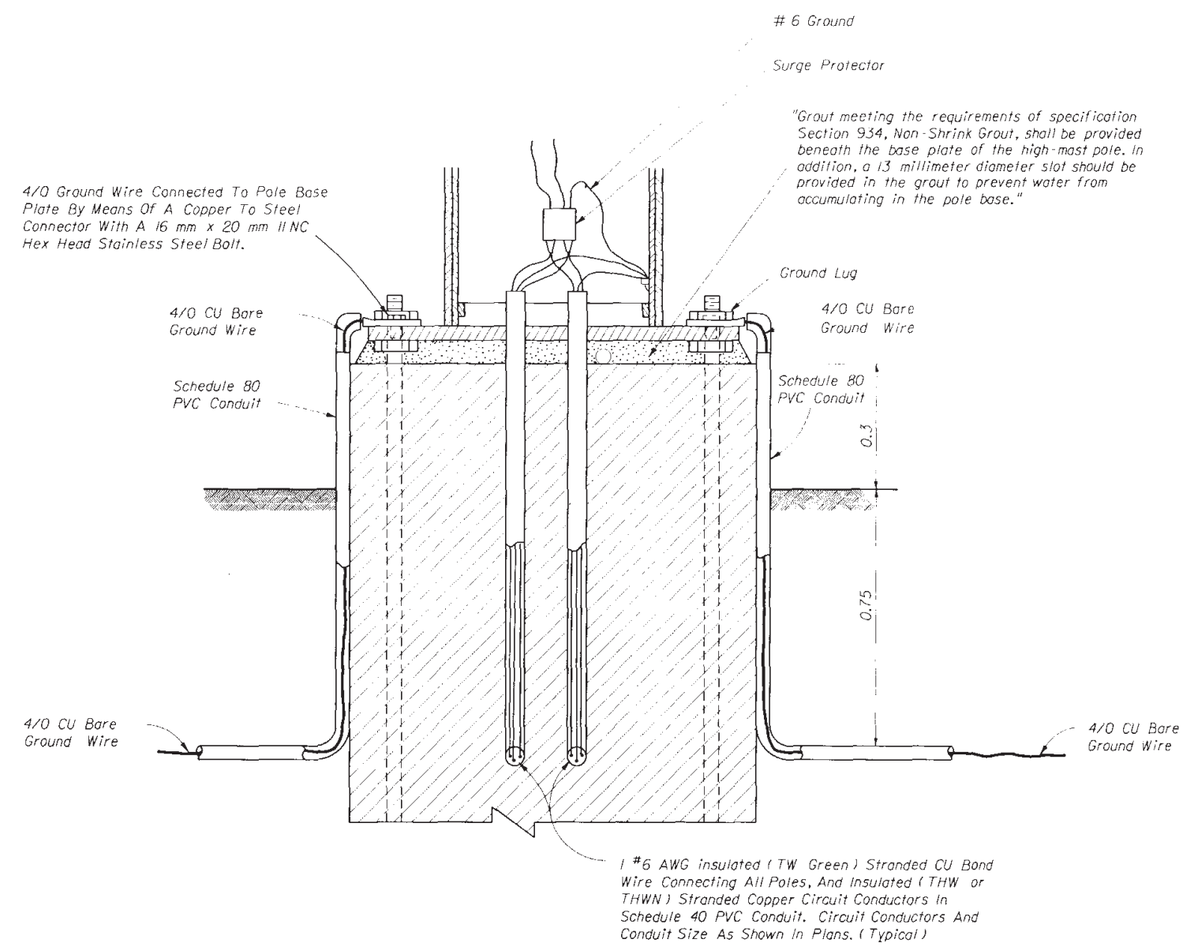

Notes:

(1) At All Pull Boxes And Pole Bases, Ends Of Conduit Shall Be Sealed In Accordance With Section 630 Of The Standard Specifications For Road And Bridge Construction.

(2) 1 #6 AWG insulated (TW Green) Stranded CU Bond Wire Connecting All Poles, And Insulated (THW or THWN) Stranded Copper Circuit Conductors In Schedule 40 PVC Conduit. Circuit Conductors And Conduit Size As Shown In Plans. (Typical)

STATE OF FLORIDA DEPARTMENT OF TRANSPORTATION
TRAFFIC DESIGN

HIGHMAST LIGHTING DETAILS

	Names	Dates	Approved By
Designed By		08/78	Clark A. Scott
Drawn By			State Traffic Plans Engineer
Checked By			

Revision No.	Sheet No.	Index No.
94	3 of 3	17502

F.H.W.A. Approved:

Foundations apply only to slopes of 1:4 or flatter.

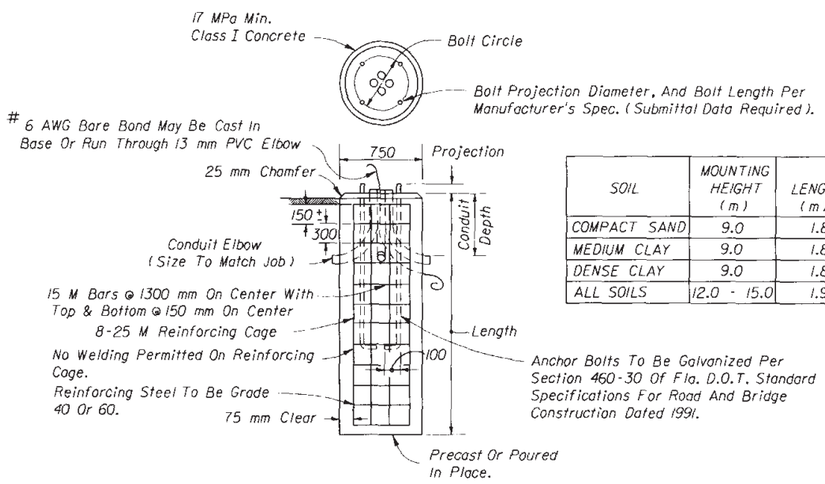

SOIL	MOUNTING HEIGHT (m)	LENGTH (m)	BOLT CIRCLE (m)
COMPACT SAND	9.0	1.8	292
MEDIUM CLAY	9.0	1.8	292
DENSE CLAY	9.0	1.8	292
ALL SOILS	12.0 - 15.0	1.9	381

METAL POLE CONCRETE FOUNDATION DETAIL

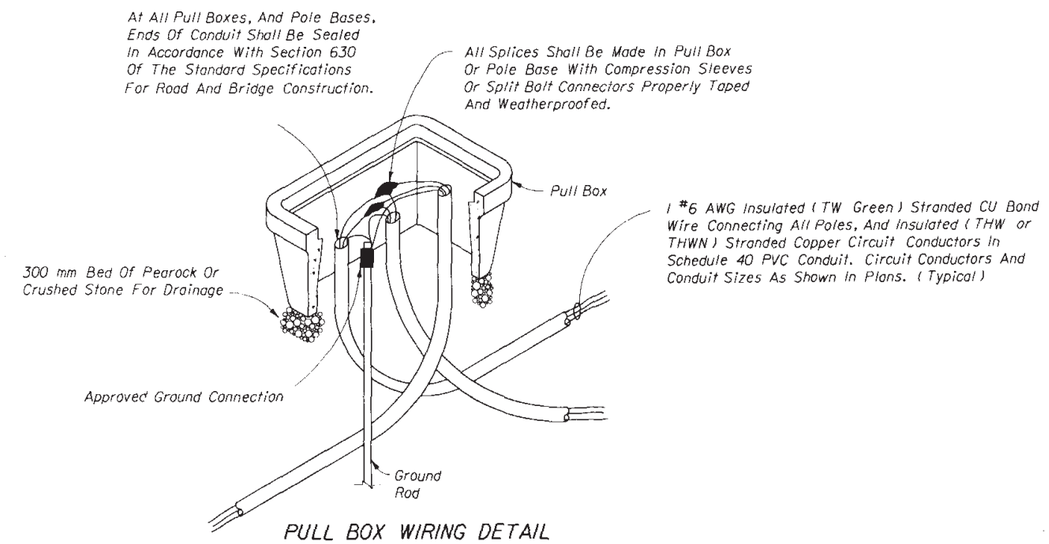

PULL BOX WIRING DETAIL

STATE OF FLORIDA DEPARTMENT OF TRANSPORTATION
TRAFFIC DESIGN

ROADWAY LIGHTING DETAILS

	Names	Dates	Approved By
Designed By		08/78	Clark A. Scott
Drawn By			State Traffic Plans Engineer
Checked By			

Revision No.	Sheet No.	Index No.
94	1 of 1	17503

F.H.W.A. Approved:

NOTE :
It shall be the contractors responsibility to provide a complete service assembly as per the plans and service specifications.
.The service installation shall meet the requirements of the national electric code and applicable local codes.
Shop drawings are not required for service equipment, unless noted in the plans.

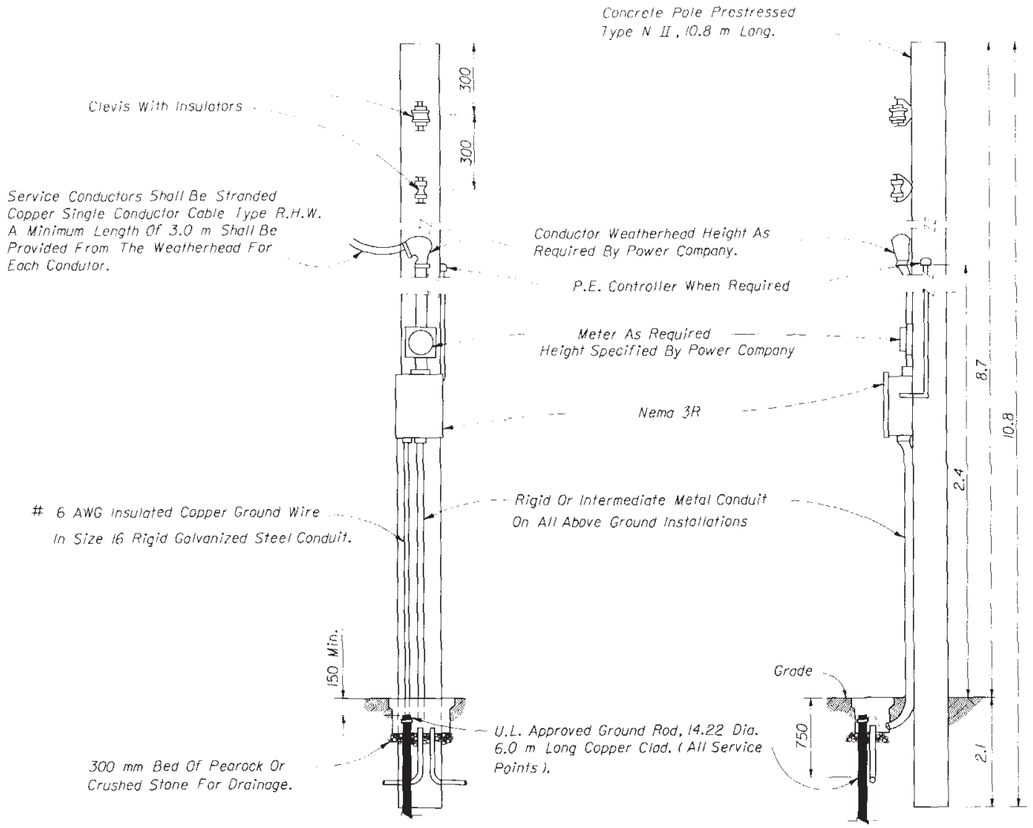

DETAIL "A"

AERIAL FEED

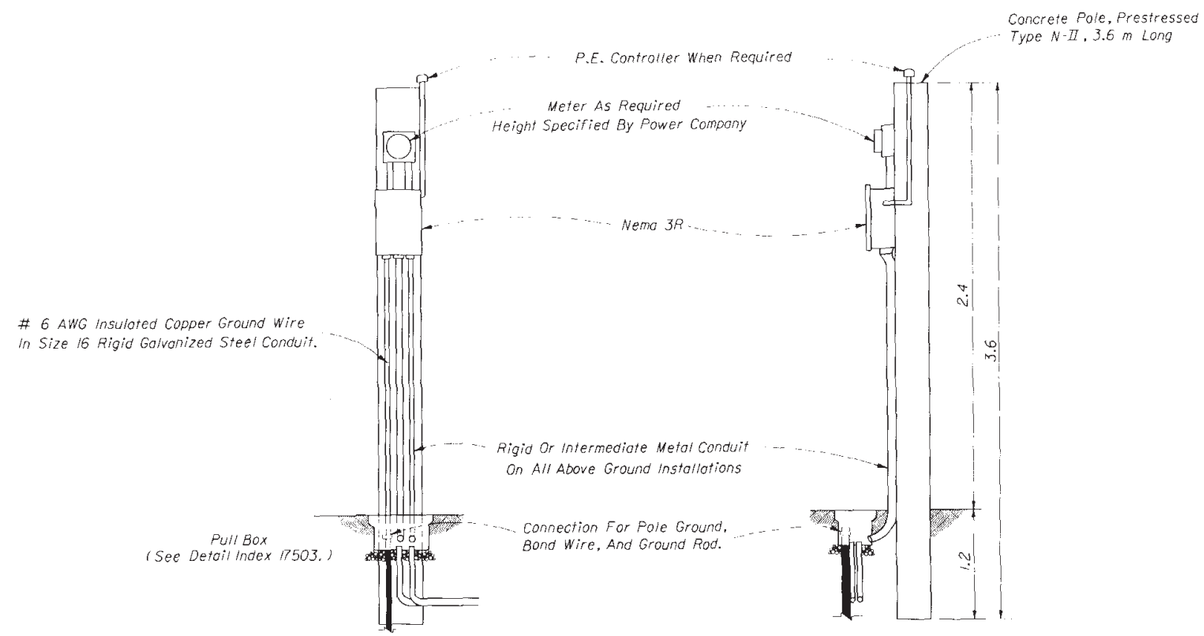

DETAIL "B"

UNDERGROUND FEED

Notes:

1. Photo electric control as required.
2. All neutral wires to have white insulation, do not use white or green insulated wires for ungrounded conductors.
3. A pull box is required at each service point.

SERVICE SPECIFICATIONS

1. The enclosure shall be NEMA 3R, pole mounted, rain-tight.
2. The enclosure door shall be lockable by padlock and four keys provided to the maintaining agency. The door shall have a minimum of three hinges and be latchable. No screws to be used to attach door.
3. 480 V minimum rating bolt-in type breakers shall be used.
4. Busbar to be copper coated and have a minimum rating of 100 amps. When main breaker exceeds 100 amps busbar to match breaker amperage.
5. Locate contactor, transformer, and H.O.A. switch inside enclosure. The enclosure to be sized to accomodate as many breakers as called for and all other service equipment.
6. The Enclosure to be rigidly attached to the pole face.
7. A 600 V lightning protector shall be wired inside the enclosure.
8. A main breaker is required in all service panels with 2 or more feeder breakers.
9. All service equipment shall be U.L. approved.

STATE OF FLORIDA DEPARTMENT OF TRANSPORTATION
TRAFFIC DESIGN

SERVICE POINT DETAILS

	Names	Dates	Approved By
Designed By		8-78	Clark A. Scott, State Traffic Plans Engineer
Drawn By			
Checked By			
F.H.W.A. Approved:			Revision No. 94 / Sheet No. 1 of 1 / Index No. 17504

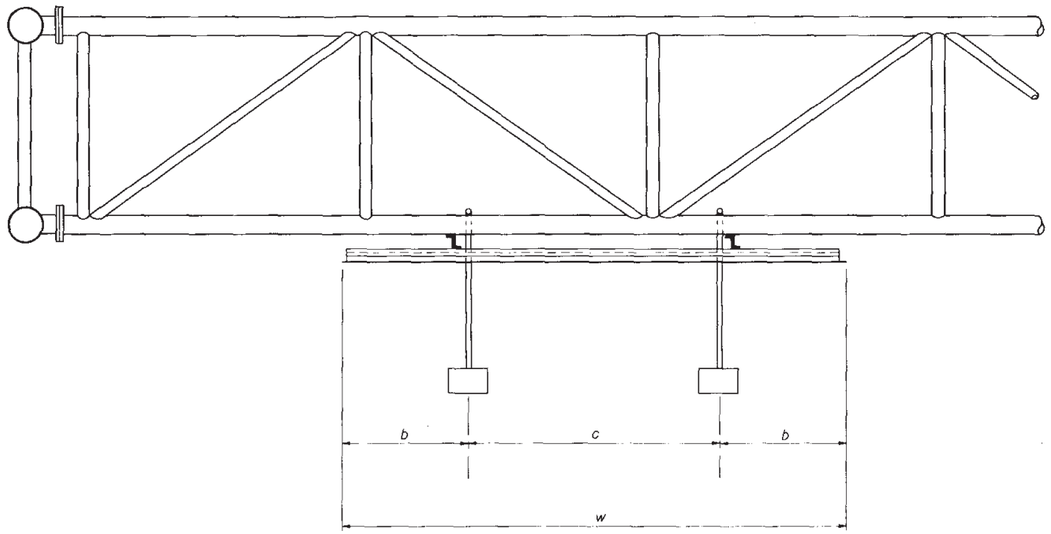

WIDTH OF SIGN FACE	To 3.0 m	To 6.5 m	To 9.75 m	To 13.0 m
NUMBER OF FIXTURES	ONE	TWO	THREE	FOUR
EQUATIONS FOR PLACING FIXTURES ALONG SIGN WIDTH	W = 2b	W = 2b + c	W = 2b + 2c	W = 2b + 3c
	c = 0	c = 2.2b	c = 2.2b	c = 2.2b

PLACEMENT OF SIGN LIGHTS

1- Luminaire shall be mounted so that the lamp center is 1.2 m in front of the sign face.
2- Luminaire shall be mounted so that the back of the fixture is placed 0.3 m below the bottom edge of the sign face.
3- Luminaires from manufacturers who recommended that their fixture be tilted shall be mounted on a bracket which provides this recommended tilt.
4- Photometric data for mercury vapor luminaire proposed for sign lighting shall be submitted for approval to the District Lighting Engineer, Florida Department Of Transportation.

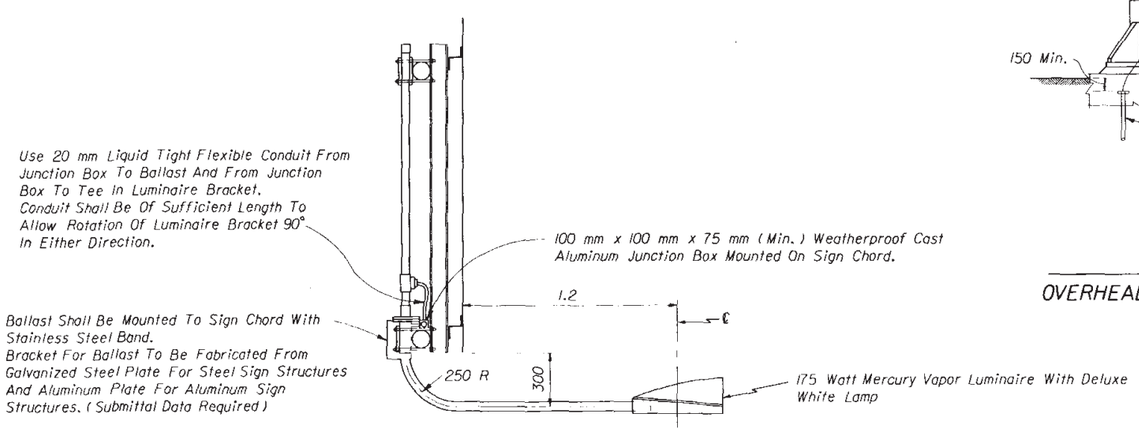

SIGN LIGHTING INSTALLATION

The roadway lighting contractor shall provide a means for sign service entry into a pole base or a pull-box installed in the lighting circuit, and loop 0.6 meters of lighting circuit conductors for connection by sign contractor.

The sign contractor shall furnish and install Luminaires, Nema 3R Enclosure, 30 Amp Breaker, Conduit, Conductors, and all other electrical equipment necessary for connection to roadway lighting circuit as provided by the roadway lighting contractor.

When roadway lighting circuits are not available the designer shall include pay item numbers in the plans to Furnish and Install Conduit, Conductor, Pull-Box, and Service Point Equipment.

Compression type connectors properly taped and waterproof shall be used.

See Roadway Lighting Plans for sign service locations.

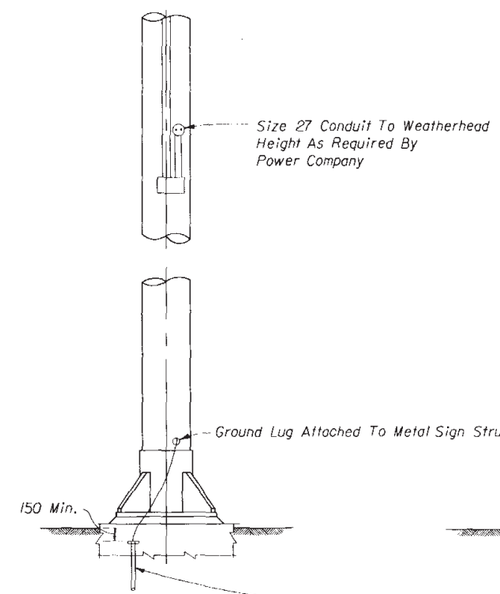

PLAN

OVERHEAD POWER SUPPLY

Splices To Be Made With Compression Sleeves Then Properly Insulated & Waterproofed.

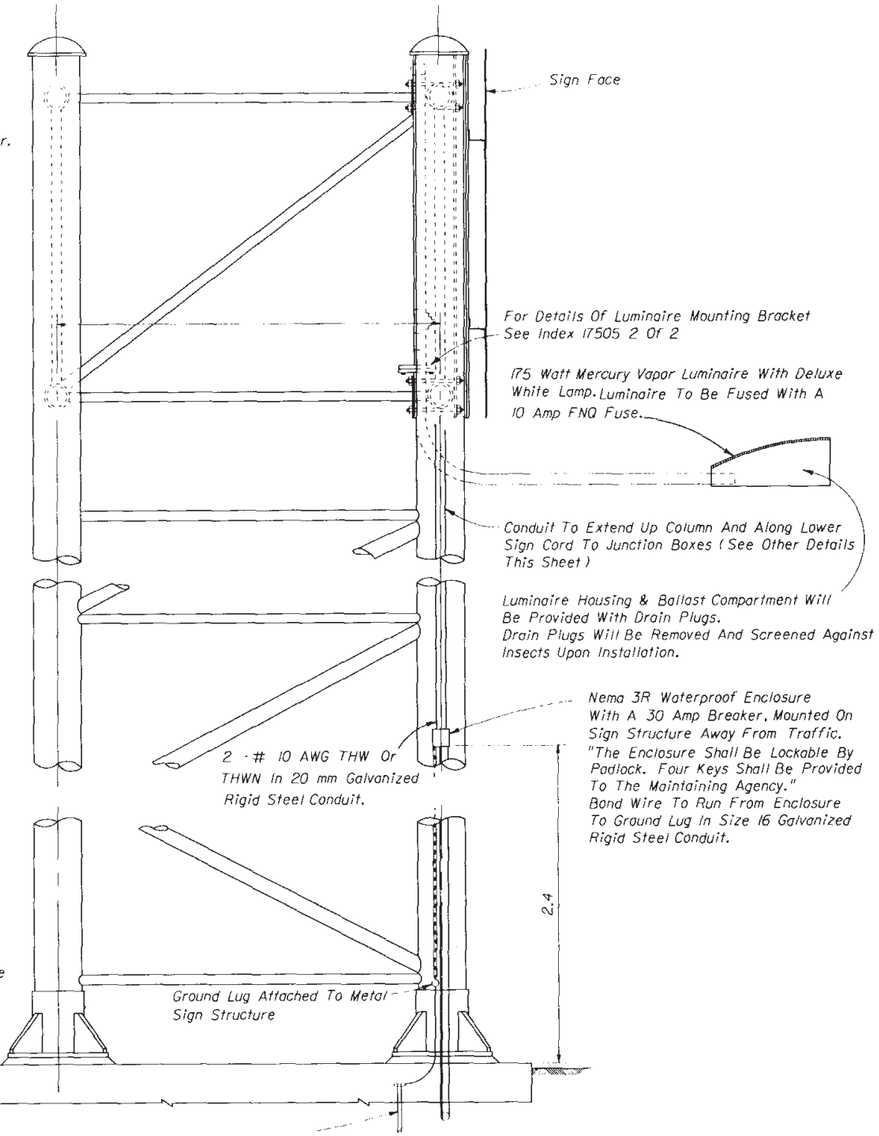

STATE OF FLORIDA DEPARTMENT OF TRANSPORTATION
TRAFFIC DESIGN

EXTERNAL LIGHTING FOR SIGN (MERCURY VAPOR)

	Names	Dates
Designed By		
Drawn By		
Checked By		
F.H.W.A. Approved:		

Approved By C. Clark Scott
State Traffic Signs Engineer

Revision No.	Sheet No.	Index No.
94	1 of 2	17505

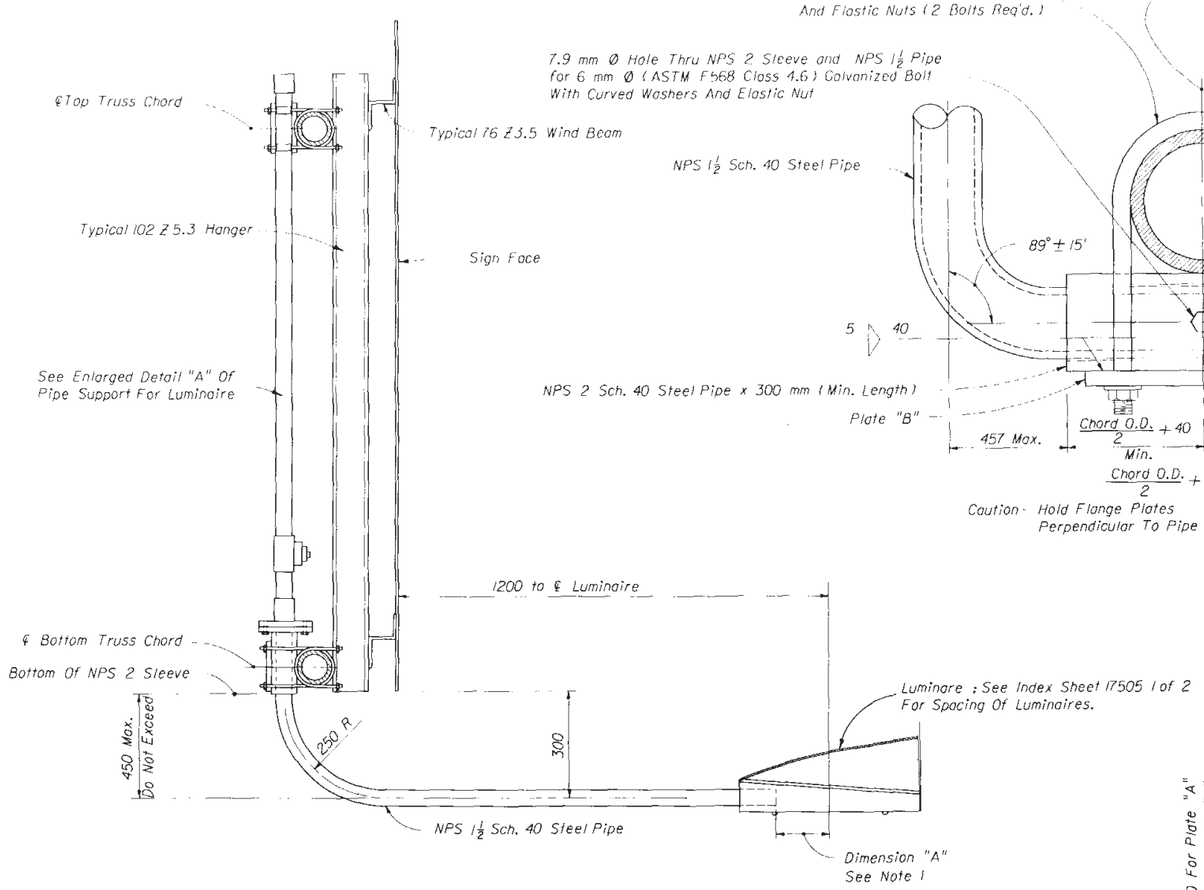

SECTION THROUGH SIGN SUPPORT AT LUMINAIRE

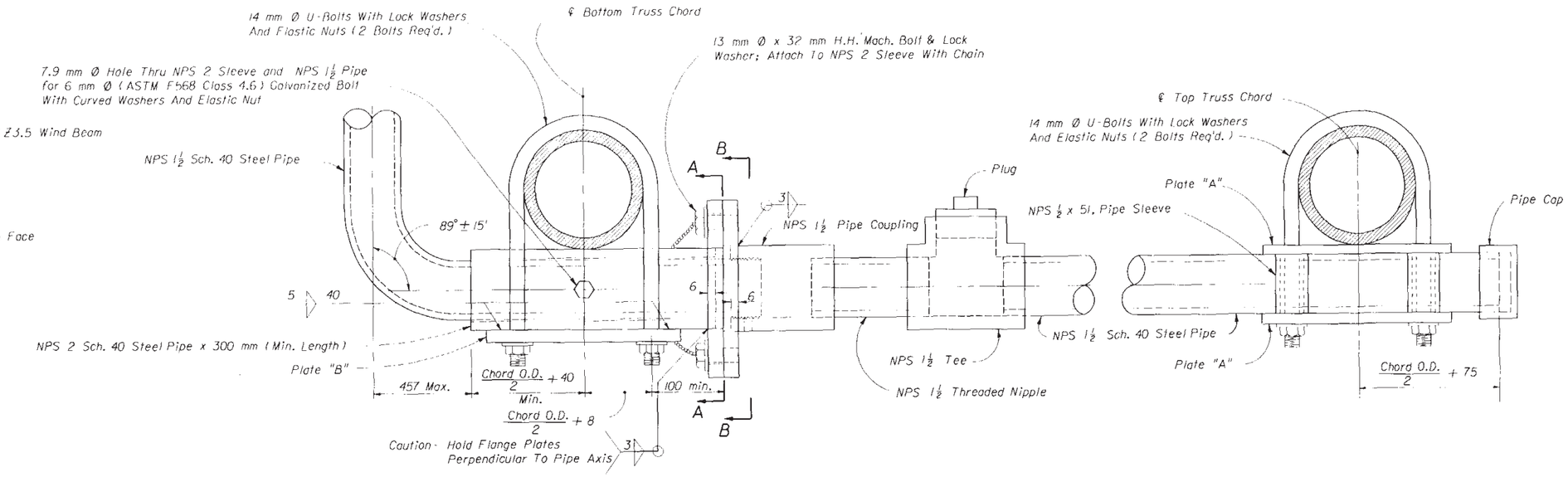

DETAIL "A"

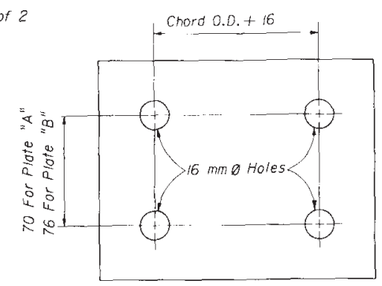

Plate "A": 6 x 120 x Chord O.D. + 65

Plate "B": 10 x 125 x Chord O.D. + 65

NOTES

1- Dimension "A" to be established from type and make of luminaire to be purchased and used on the project.

2- The center lines of both flange plates and the luminaire support arm are to be set parallel to the roadway before the set screw is seated.

3- Minor adjustments in the horizontal location of the luminaire support arm along the bottom chord of the truss will be allowed so that the flange plates will clear the truss web members.

4- All steel pipe shall meet the strength requirements of ASTM Specification A53 Grade "A" or Grade "B". Steel plates shall meet the requirements of A36 and bolts, nuts and washers shall meet the requirements of ASTM F568 Class 4.6.

5- All items shall be hot dip galvanized after fabrication in accordance with the requirements of ASTM A123 and /or A153.

6- Luminaire support arm shall be free to rotate in a clockwise or counter clockwise direction. When service or maintenance is required for sign face or vertical face of truss; Support arm shall be capable of being locked in a position 90° from parallel to the roadway for unobstructed working clearance.

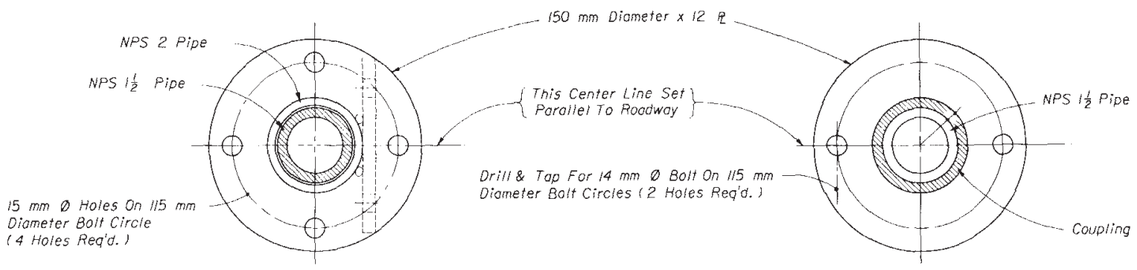

SECTION AA

SECTION BB

STATE OF FLORIDA DEPARTMENT OF TRANSPORTATION
TRAFFIC DESIGN

EXTERNAL LIGHTING FOR SIGNS (MERCURY VAPOR)

	Names	Dates	Approved By Clark A Scott
Designed By			
Drawn By			
Checked By			Revision No. / Sheet No. / Index No.
F.H.W.A. Approved:			94 / 2 of 2 / 17505

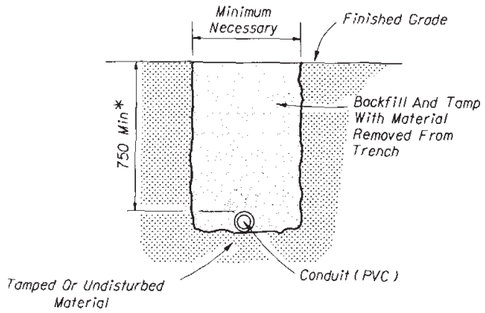

FOR USE IN AREAS NOT EXPOSED TO VEHICULAR TRAFFIC AND UNDER DRIVEWAYS

FIGURE A

*May be adjusted due to field conditions upon approval of project engineer.

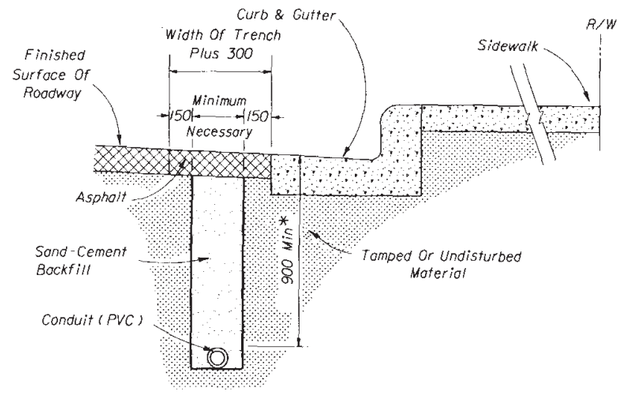

FOR USE IN ASPHALT ROADWAY ADJACENT TO GUTTER WHEN PLACEMENT OUTSIDE OF THE PAVEMENT IS NOT FEASIBLE.

Note

1. Trench not to be open more than 75.0 m at a time when construction area is subject to vehicular of pedestrian traffic.
2. Asphalt to be sawcut and removed to leave neat lines on both sides of the 300 mm pavement cut.
3. See note 3 Figure C.

FIGURE B

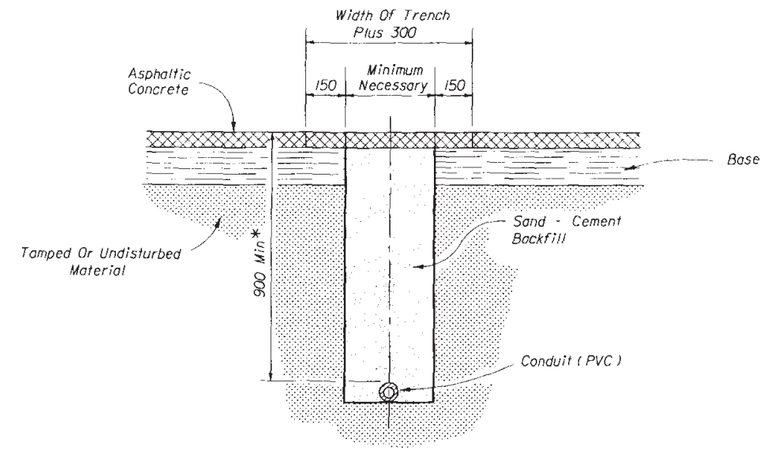

FOR USE IN INSTALLING CONDUIT UNDER EXISTING ASPHALT PAVEMENT NOT ADJACENT TO GUTTER WHEN JACKING IS NOT FEASIBLE

Note:

1. Rigid conduit must be used when jacking under existing pavement at 900 mm minimum depth.
2. Asphalt to be sawcut at the edges of the trench.
3. The removal and replacement of the additional pavement width (150 mm) will not be required when the trench can be constructed without disturbing the asphalt surface on either side.

FIGURE C

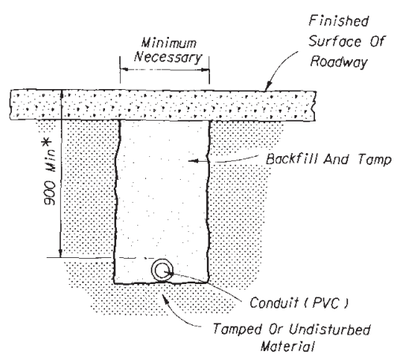

FOR USE INSTALLING CONDUIT UNDER A NEW ROADWAY PRIOR TO INSTALLATION OF CURBS, BASE AND PAVEMENT

FIGURE D

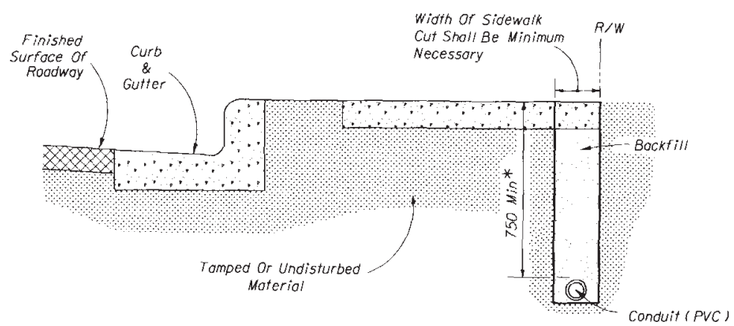

FOR USE IN INSTALLING CONDUIT UNDER SIDEWALK

Note:

1. Sidewalk patches to match existing joints.
2. Entire sidewalk slab must be replaced when specified in the plans.
3. Backfill and tamp with material from trench except at driveways. At driveways, backfill a length of trench within the driveway entirely with Class I concrete.

FIGURE E

STATE OF FLORIDA DEPARTMENT OF TRANSPORTATION
TRAFFIC DESIGN

CONDUIT INSTALLATION DETAILS

	Names	Dates	Approved By
Designed By		02/75	Clark A Scott
Drawn By			
Checked By		02/75	

F.H.W.A. Approved:	Revision No.	Sheet No.	Index No.
	94	1 of 2	17721

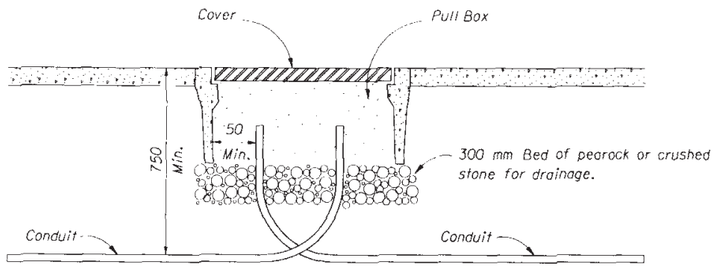

PULL BOX ENTRY OF CONDUIT UNDER SIDEWALKS

FIGURE A

Note:
Ends of conduit shall be sealed in accordance with Section 630 of the Standard Specifications for Road and Bridge Construction.

ROADWAY

PLAN

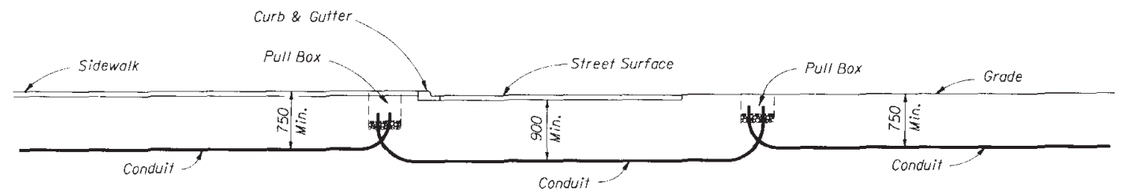

UNDER SIDEWALK UNDER ROADWAY UNDER NON-TRAFFIC BEARING SURFACE

SECTION

FIGURE B

Note:
One run of conduit (between pull boxes) shall not contain more than 360° of bend including pull box bends.

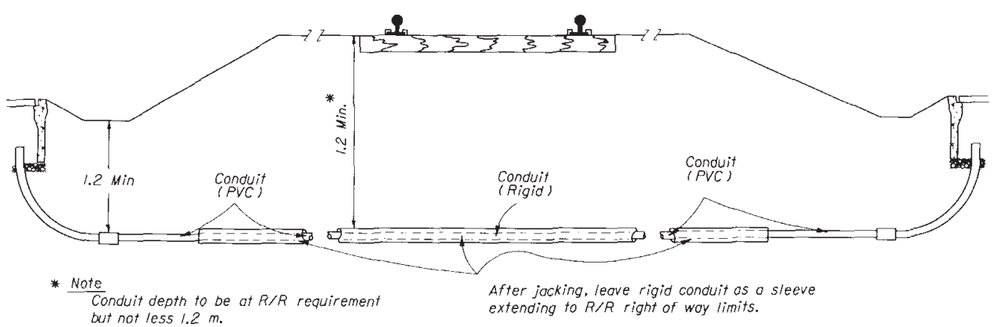

FOR USE UNDER RAILROADS

FIGURE C

STATE OF FLORIDA DEPARTMENT OF TRANSPORTATION
TRAFFIC DESIGN

CONDUIT INSTALLATIONS DETAILS

	Names	Dates
Designed By		
Drawn By		
Checked By		
F.H.W.A. Approved:		

Approved By Clark A. Scott
State Traffic Plans Engineer

Revision No.	Sheet No.	Index No.
94	2 of 2	17721

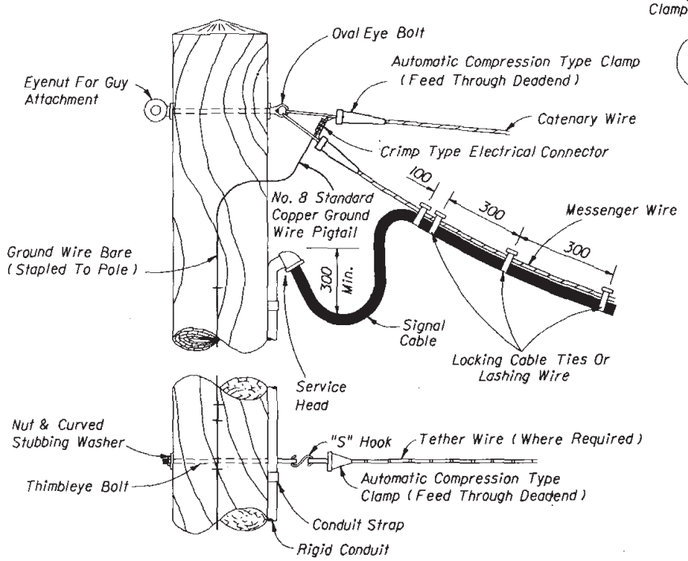

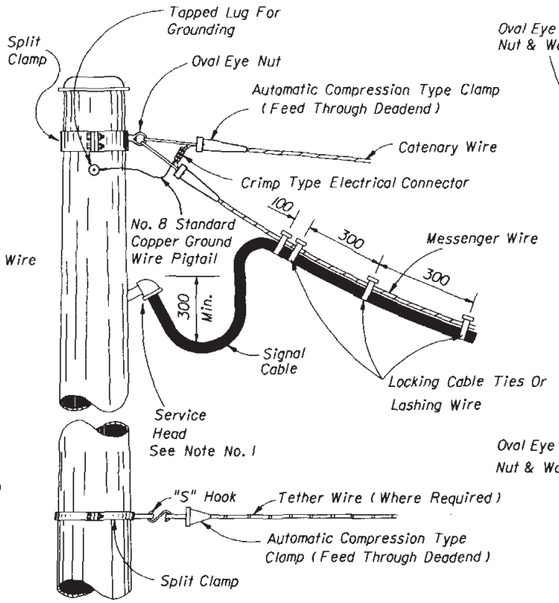

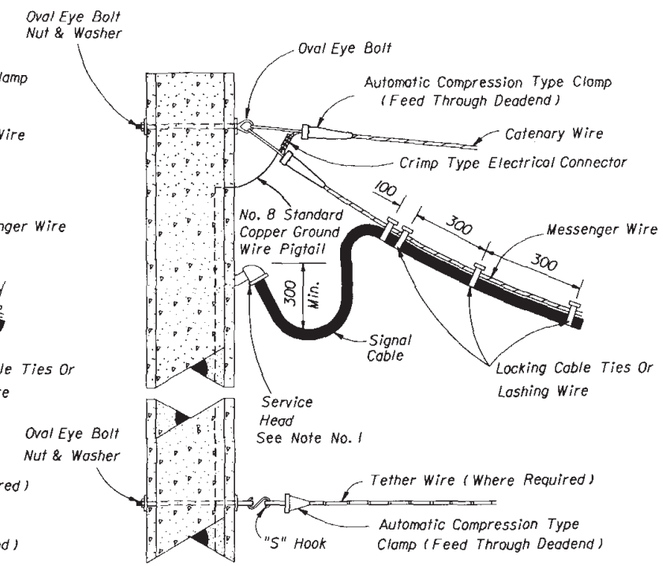

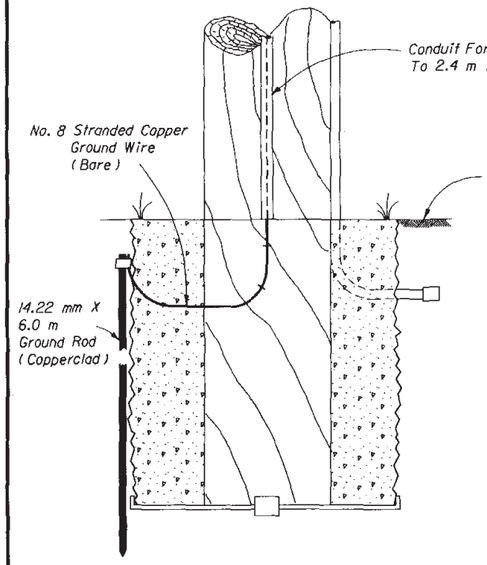

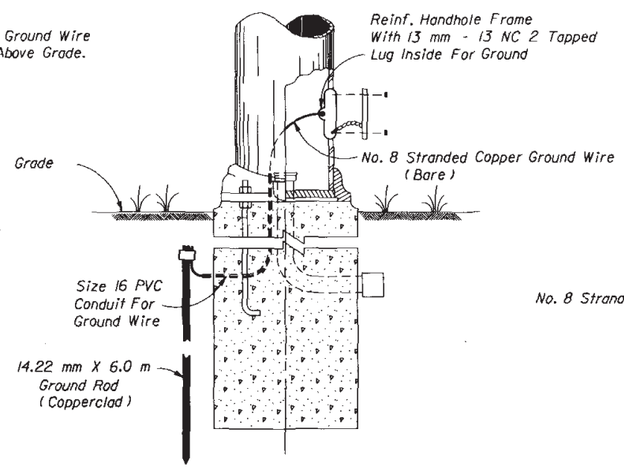

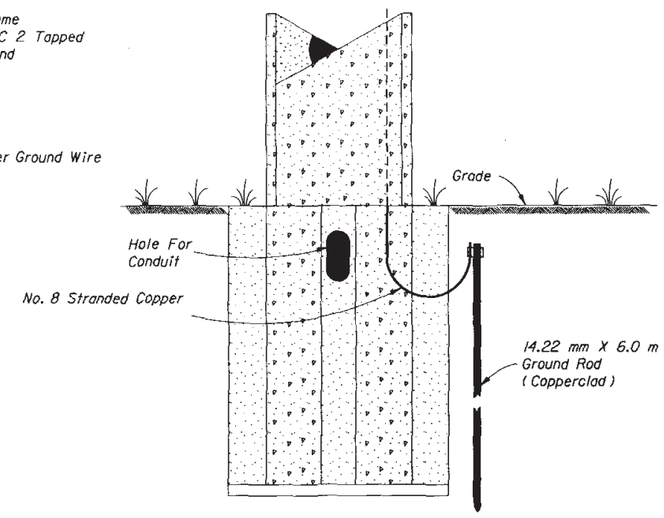

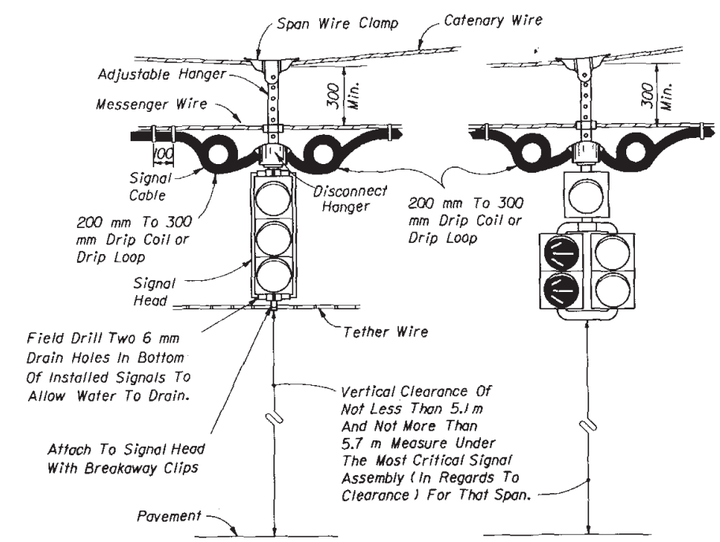

Notes:

1. With the approval of the resident engineer, the service head hole for joint use poles may be drilled by the utility company at an angle of 90° but not less than 45° to the face of the pole.
2. Lashing wire should normally be used for distances of 3.6 m or greater.
3. The overlapped connection of adjustable hangers shall use a minimum of 2 bolts with a minimum spacing between bolts of 50 mm.

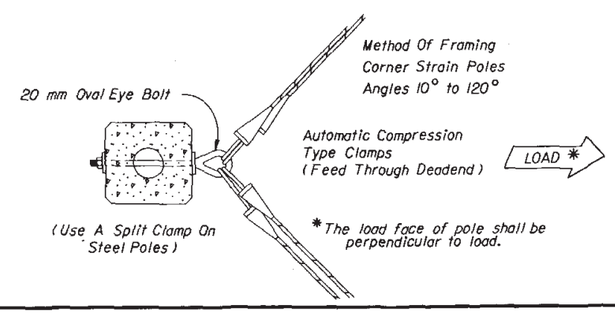

SINGLE POINT ATTACHMENT

STATE OF FLORIDA DEPARTMENT OF TRANSPORTATION
TRAFFIC DESIGN

SIGNAL CABLE & SPAN WIRE INSTALLATION DETAILS

	Names	Dates	Approved By Clark A. Scott State Traffic Plans Engineer
Designed By			
Drawn By			
Checked By			
F.H.W.A. Approved:			Revision No. 94 · Sheet No. 1 of 2 · Index No. 17727

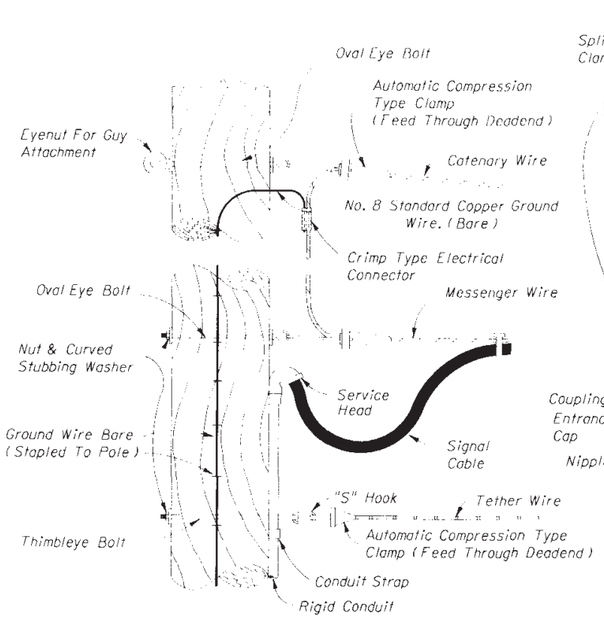

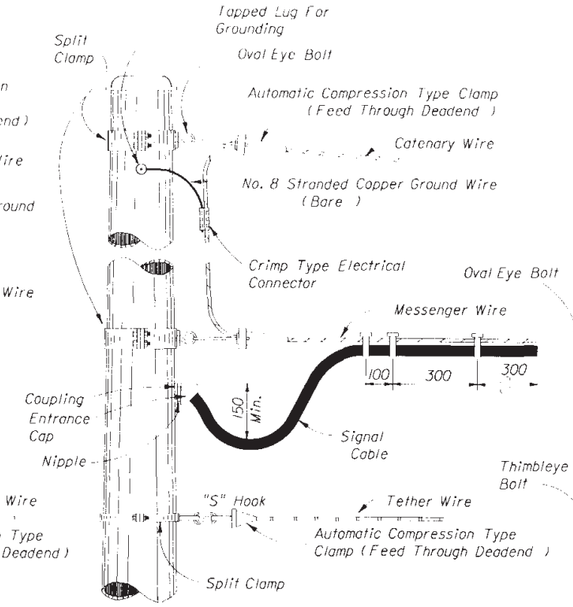

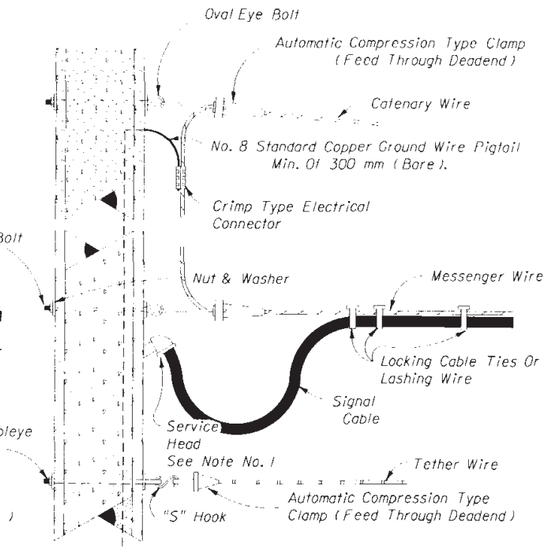

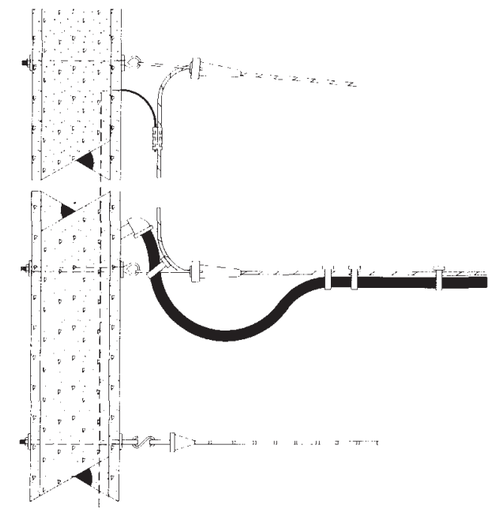

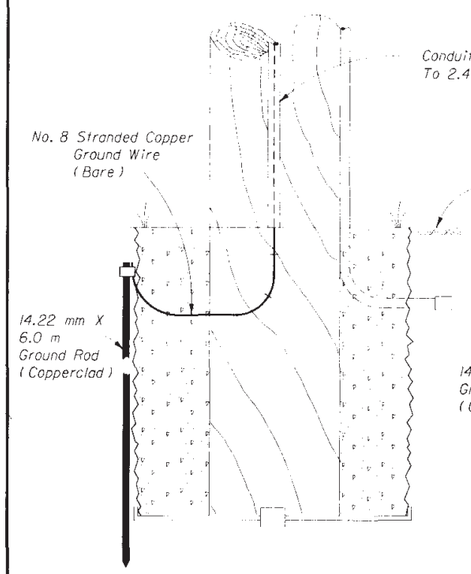

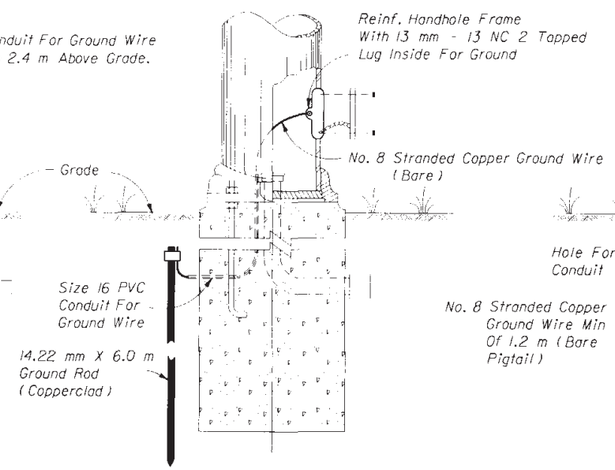

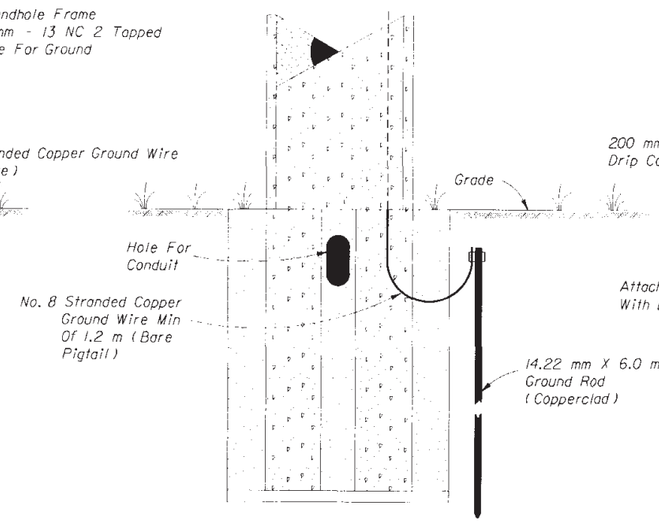

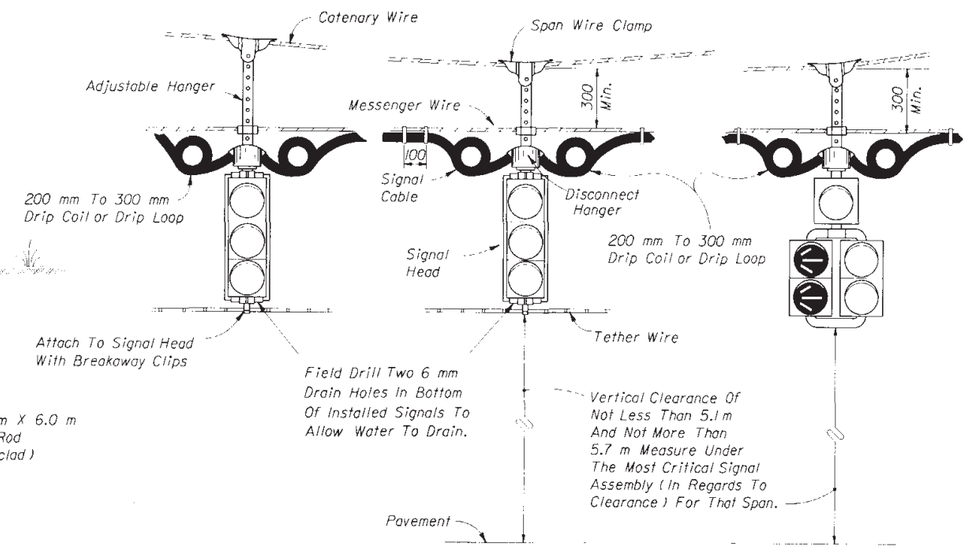

Notes:

1. The service head hole for joint use poles may be drilled by the utility company at an angle of 90° but not less than 45° to the face of the pole.
2. Lashing wire should normally be used for distances of 3.6 m or greater.
3. The overlapped connection of adjustable hangers shall use a minimum of 2 bolts with a minimum spacing between bolts of 50 mm.

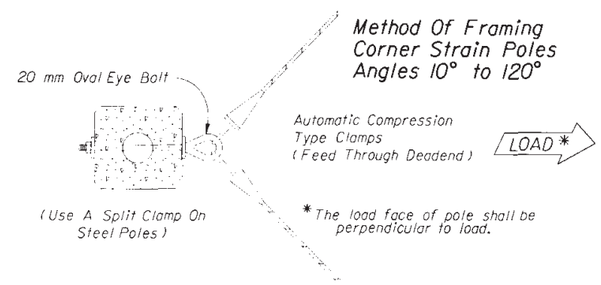

TWO POINT ATTACHMENT

STATE OF FLORIDA DEPARTMENT OF TRANSPORTATION
TRAFFIC DESIGN

SIGNAL CABLE & SPAN WIRE INSTALLATION DETAILS

	Names	Dates
Designed By		
Drawn By		
Checked By		

Approved By Clark A. Scott
State Traffic Plans Engineer

Revision No.	Sheet No.	Index No.
94	2 of 2	17727

F.H.W.A. Approved:

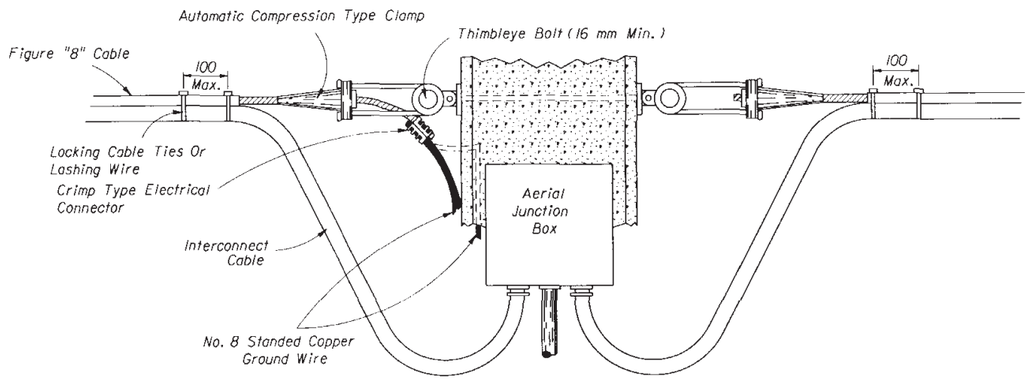

FIGURE A

CABLE DROP AND TERMINATION DETAIL
AERIAL INTERCONNECT FIGURE "8"

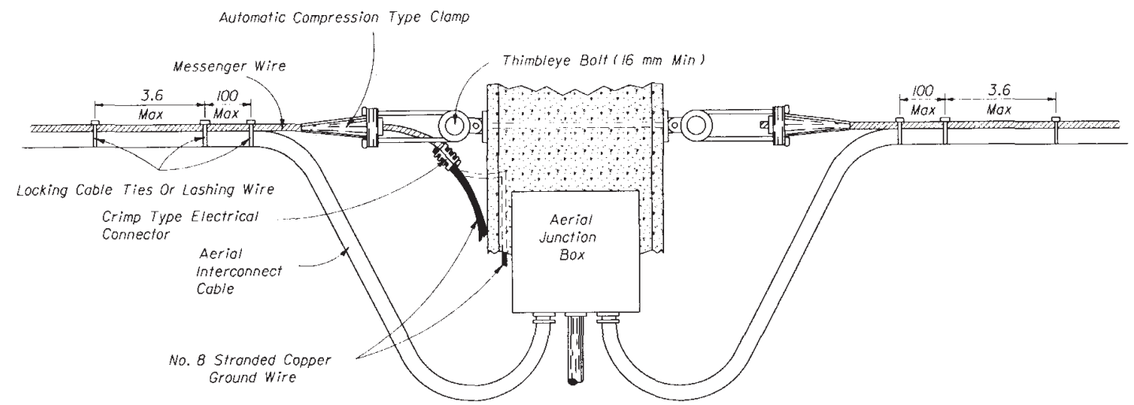

FIGURE B

CABLE DROP AND TERMINATION DETAIL
AERIAL INTERCONNECT MESSENGER WIRE WITH CLAMPS

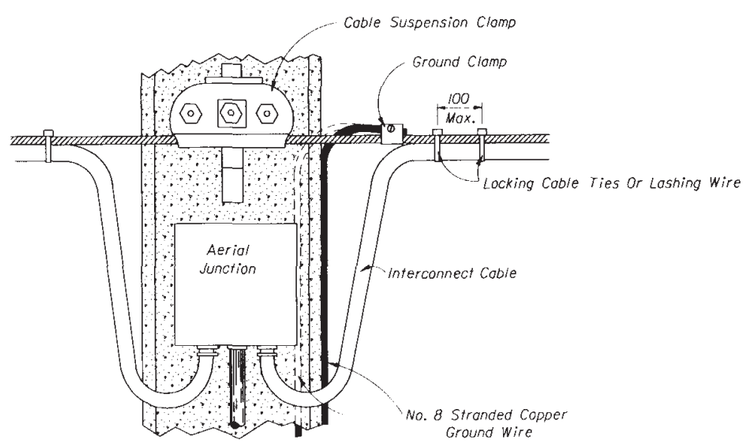

FIGURE C

CABLE DROP DETAIL
AERIAL INTERCONNECT MESSENGER WIRE WITH CLAMPS

Notes:

1. The messenger wire of the interconnect cables shall be grounded to the copper ground wire of the pole or to the external wire extending down the pole.
2. When utilizing the external ground wire to the pole, a piece of size 16 rigid conduit shall extend up the pole externally to a point 2.4 m above finish grade to protect the ground wire connecting the messenger wire to the ground rod.
3. Locking cable ties or lashing wire when used shall be placed no further than 300 mm apart except at the point of cable drop or terminations where one (1) shall be placed at the point where the cables separate from the messenger wire and another placed 100 mm (max) from that tie. When using figure "8" interconnect cable only the locking cable ties shall be used.
4. If accessible the internal ground wire of the support pole may be used to ground the messenger wire.
5. Lashing wire should normally be used for distances of 3.6 m or greater.

STATE OF FLORIDA DEPARTMENT OF TRANSPORTATION
TRAFFIC DESIGN

AERIAL INTERCONNECT

	Names	Dates	Approved By
Designed By			
Drawn By			
Checked By			

F.H.W.A. Approved:	Revision No.	Sheet No.	Index No.
	04	1 of 1	17733

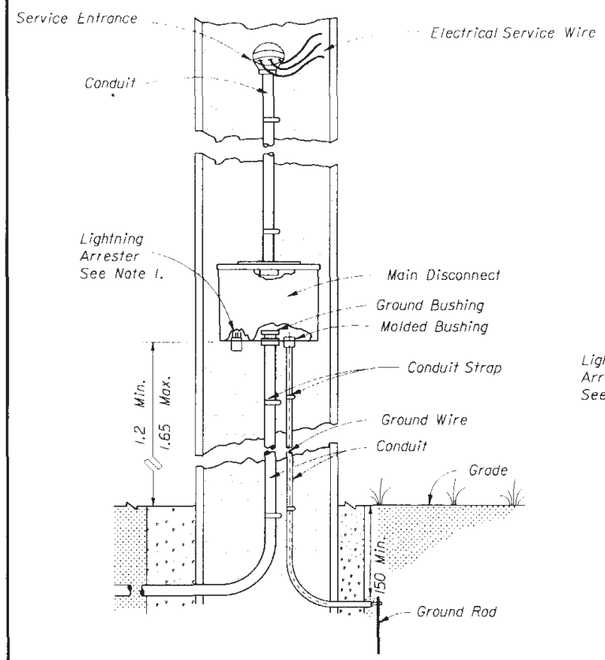

FIGURE A
AERIAL FEED
(NO METER USED)

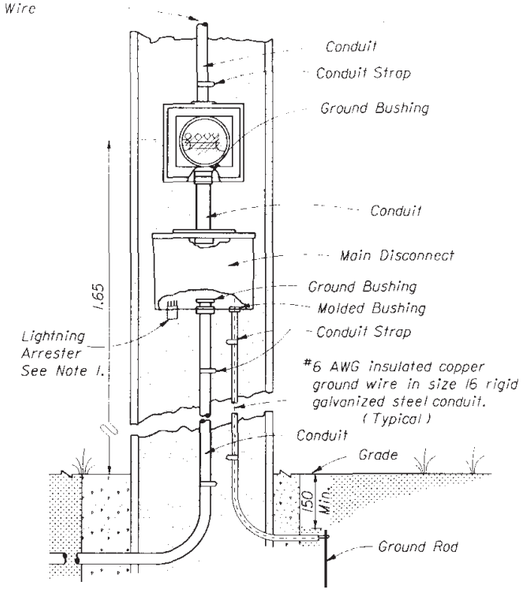

AERIAL FEED
(METER USED)

FIGURE B

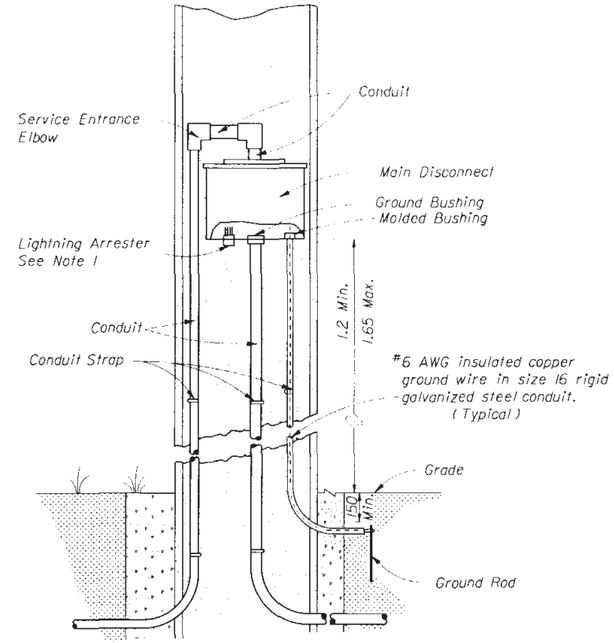

UNDERGROUND FEED
(NO METER USED)

FIGURE C

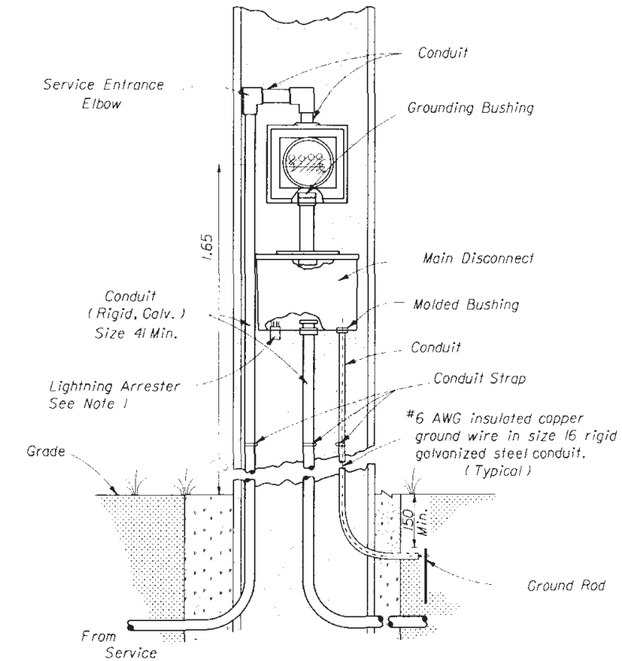

TYPE "B" UNDERGROUND FEED
(METER USED)

FIGURE D

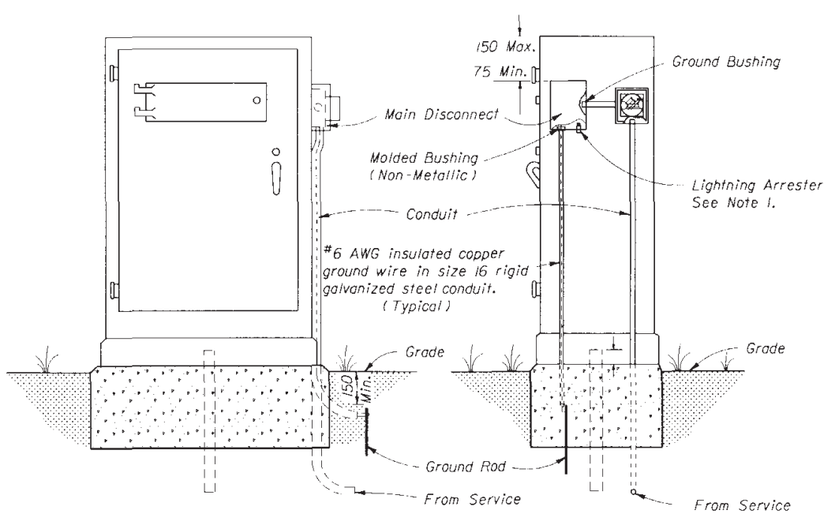

UNDERGROUND CABINET MOUNTED
(METER USED)

FIGURE E

NOTES:

1. The lightning arrester can be located on the side or bottom of the main disconnect enclosure at the Contractors Option.

2. Liquidtight flexible conduit is approved for use from the electrical disconnect to the cabinet when both are installed on the same pole.

STATE OF FLORIDA DEPARTMENT OF TRANSPORTATION
TRAFFIC DESIGN

ELECTRIC POWER SERVICE

	Names	Dates
Designed By		
Drawn By		09/80
Checked By		
F.H.W.A. Approved:		

Approved By Charles A. Scott
State Traffic Plans Engineer

Revision No.	Sheet No.	Index No.
94	1 of 1	17736

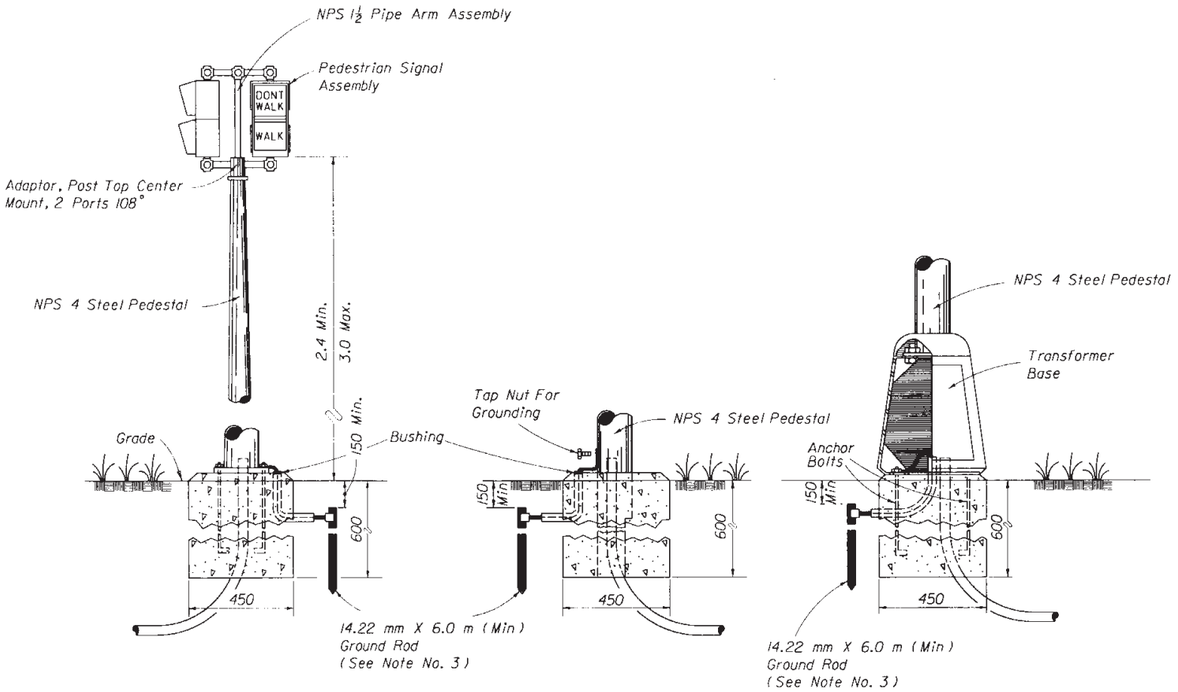

FIGURE A

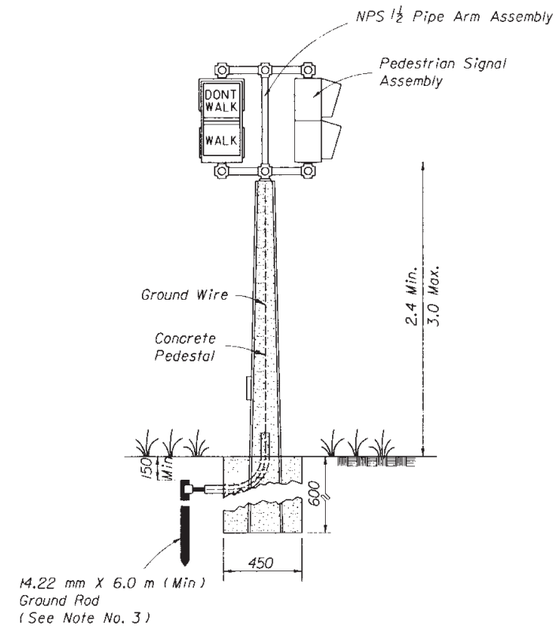

FIGURE B

Notes:

1. As an option, the contractor will be allowed to install pedestrian signals on concrete poles and pedestals with the use of lead anchors (two bolts same size per hub.) in lieu of the standard steel bands.
2. Holes drilled or punched in metal poles or pedestals shall be thoroughly reamed, cleaned of all burrs and covered with two (2) coats of zinc rich paint as specified in the standard specifications for road and bridge, constuction. Grommets or bushings shall be installed in holes.
3. Grounding to be in accordance with Section 620 of the Standard Specifications.

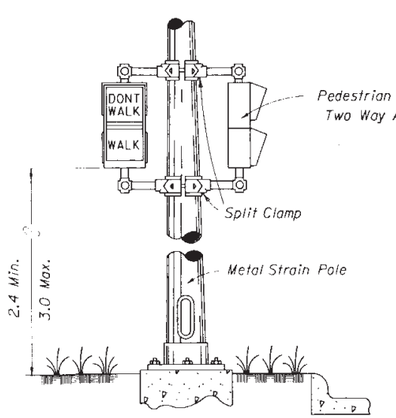

FIGURE C

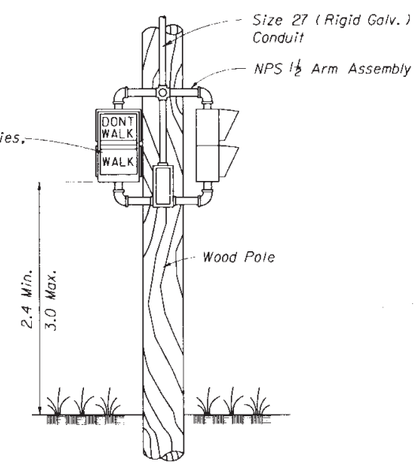

FIGURE D

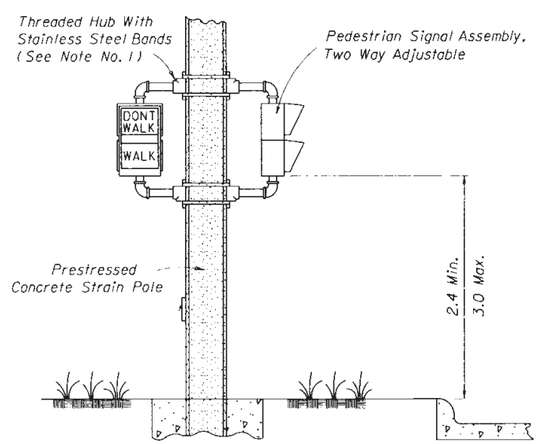

FIGURE E

STATE OF FLORIDA DEPARTMENT OF TRANSPORTATION
TRAFFIC DESIGN

PEDESTRIAN CONTROL SIGNAL INSTALLATION DETAILS

	Names	Dates	Approved By
Designed By			Clark G. Scott
Drawn By		09/80	
Checked By			
F.H.W.A. Approved:			

Revision No.	Sheet No.	Index No.
94	1 of 1	17764

DETAILS FOR SPLICING LOOP WIRE TO LEAD-IN WIRE

STEP 1

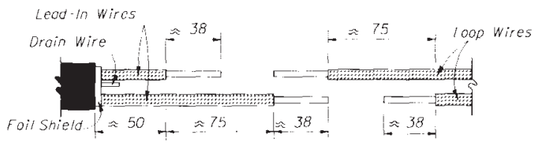

Strip Loop And Lead-In Cable Conductors. If Heat Shrinkable Silicone Lined, Cross Linked Polyethylene Insulating Tubing Is To Be Used, Slip Tubing Over Lead-In Cable And Individual Conductors.

STEP 2

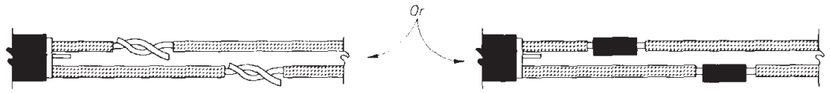

Twist The Bare Conductors Together.

Crimp The Bare Conductors Together With An Uninsulated Butt Connector.

STEP 3

Solder Each Splice Using Resin-Core Solder.

Solder Each Splice Using Resin-Core Solder.

STEP 4

Wrap Each Splice With Silicone Tape. Half Lap Starting At Center Of Splice And Proceeding To The Right (Or Left) ≈ 20 mm Past End Of Splice, Then Proceeding To The Left (Or Right) ≈ 20 mm Past Other End Of Splice And Returning To Center. Wrap Each Splice, With An All Weather Heavy Duty Electrical Tape In The Same Manner ≈ 20 mm Past Each End Of Silicone Tape.

±Slide Heat Shrinkable Tubing Over Splices. The Tubing Shall Cover ≈ 25 mm Of Conductor Insulation At Each End Of Splice. Heat Tubing As Specified By Manufacturer.

STEP 5

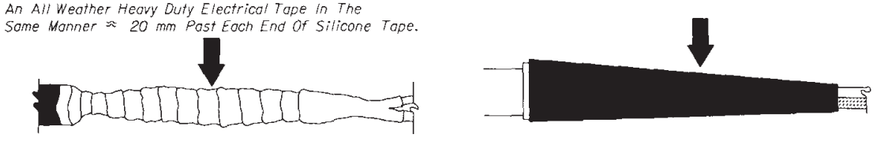

Half Lap The Two Splices Together With An All Weather Heavy Duty Electrical Tape ≈ 25 mm Past The End Of The Lead-In Cable Outside Cover And ≈ 25 mm Past Farther Most Wrap Of Step 4.

Slide Outer Heat Shrinkable Tubing Over Entire Splice Area. The Tubing Shall Cover ≈ 38 mm Of The Lead-In Cable Outside Cover And ≈ 25 mm Of The Loop Conductor Insulation.

TWISTED PAIR AND LOOP LEAD-IN INSTALLATION WITH CURB & GUTTER

ALTERNATIVE 1

Drill A Hole Through The Curb At The Point Which The Required Saw-Cut Depth Is Obtained Just Prior To Cutting The Top Inside Edge Of The Curb. Slide A Section Of Flexible Conduit At Least 150 mm Into The Hole From The Back Side Of The Curb But Not Within 50 mm Of The Top Of The Hole. The Conduit Shall Fit Snug Within The Drilled Hole. Fill The Top Of The Hole With Loop Sealant To The Level Of The Curb Surface. A Nonmetallic Material Should Be Used To Prevent Excessive Loop Sealant From Entering The Flexible Conduit.

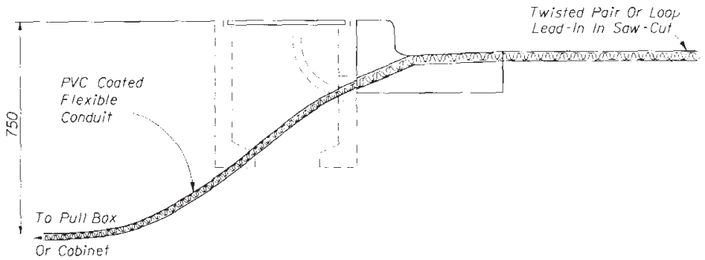

ALTERNATIVE 2

Drill A Hole 13 mm To 25 mm Larger In Diameter Than The Rigid Conduit To Be Used Through The Roadway Asphalt (Or Concrete) Surface And Base At An Appropriate Angle To Intercept The Trench Or Pull Box Hole. Place A Predetermined Length Of Rigid Conduit In The Hole And Drive The Conduit Into The Trench Or Hole. Install A Molded Bushing (Nonmetallic) On The Roadway End Of The Rigid Conduit. The Top Of The Rigid Conduit Shall Be Approximately 50 mm Below The Roadway Surface. Fill The Hole With Loop Sealant To The Level Of The Roadway Surface. A Nonmetallic Material Should Be Used To Prevent Excessive Loop Sealant From Entering The Rigid Conduit.

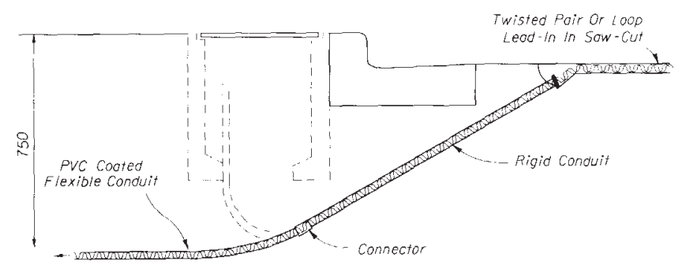

Note
Other alternatives may be approved by the State Traffic Operations Engineer.

TWISTED PAIR AND LOOP LEAD-IN INSTALLATION WITHOUT CURB & GUTTER

Cut A Slot In The Edge Of The Roadway Of Sufficient Size And Depth To Snugly Place The End Of The Flexible Conduit. The End Of The Conduit Shall Be At Least 150 mm Into The Roadway And ≈ 50 mm Below The Top Of The Roadway Surface. The Departure Angle Of The Conduit From The Roadway Shall Be 30° To 45°.

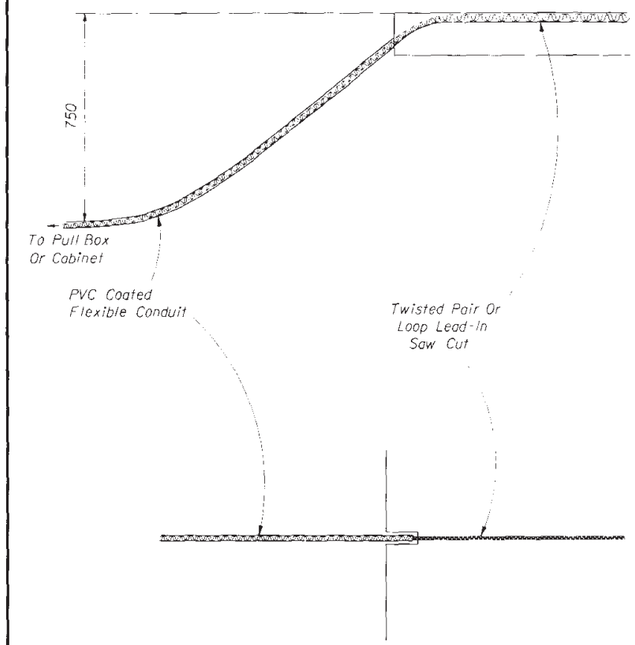

Note
Other alternatives may be approved by the State Traffic Operations Engineer.

GENERAL NOTES

1. If the loop lead-in is 22.5 m or less from the edge of the loop to the detector or controller cabinet, continue the twisted pair to the cabinet. If the loop lead-in is greater than 22.5 m continue the twisted pair to the specified pull box, splice to shielded lead-in wire and continue to the detector or controller cabinet.

2. The width of all saw cuts shall be sufficient to allow unforced placement of loop wires or lead-in cables into the saw cut. The depth of all saw cuts (except across expansion joints) shall be 75 millimeters standard with a maximum of 100 millimeters.

3. On resurfacing or new roadway construction projects, the loop wires and lead-in cables may be installed in the asphalt structural course prior to the placement of the final asphalt wearing course. The loop wires and lead-in cables shall be placed in a saw cut in the structural course. The depth of the cables below the top of the final surface shall comply with note 2.

4. A nonmetallic hold down material shall be used to secure loop wires and lead-ins to the bottom of saw-cuts. Hold down material shall be placed at approximately 300 mm intervals around loops and 600 mm intervals on lead-ins.

5. The minimum distance between the twisted pairs of loop lead-in wire is 150 mm from the loop to 300 mm from the pavement edge or curb.

6. Splice Connections in pull boxes may be made with U.L. listed, watertight, insulated connectors in lieu of the details above. The lead-in cable insulation shall be sealed using electrical tape or heat shrinkable tubing (refer to step 5 above). The seal shall extend approximately 25 mm either side of the lead-in cable outer cover.

STATE OF FLORIDA DEPARTMENT OF TRANSPORTATION
TRAFFIC DESIGN

VEHICLE LOOP INSTALLATION DETAILS

	Names	Dates	Approved By		
Designed By			Clark A. Scott		
Drawn By			State Traffic Plans Engineer		
Checked By			Revision No.	Sheet No.	Index No.
F.H.W.A. Approved:			94	1 of 2	17781

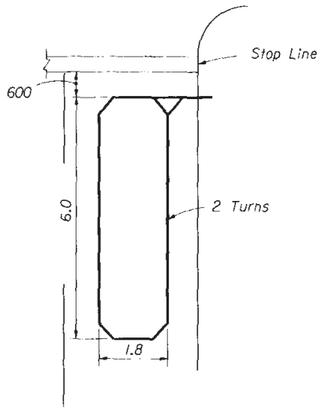

TYPE A

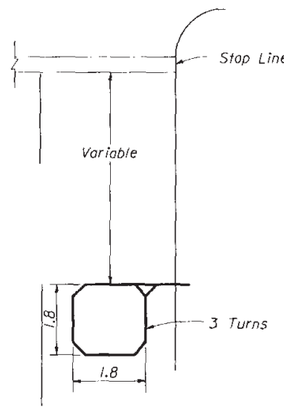

TYPE B

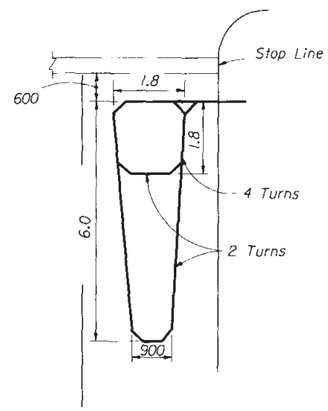

TYPE C

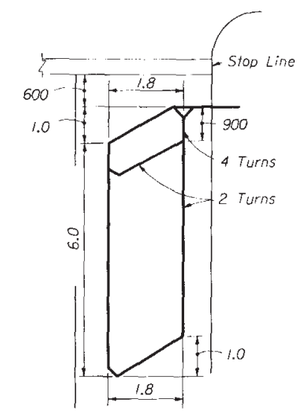

TYPE D

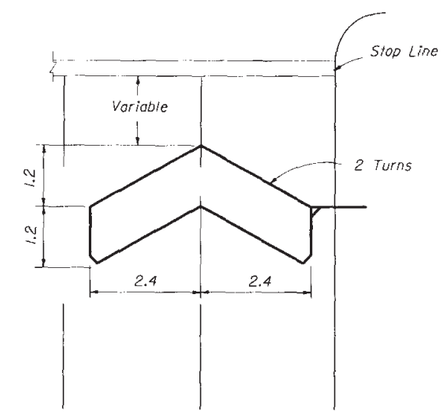

TYPE E

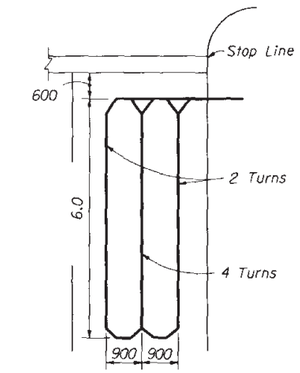

TYPE F

Note: Loop conductors must follow saw-cut to bottom forming slack section at joint.

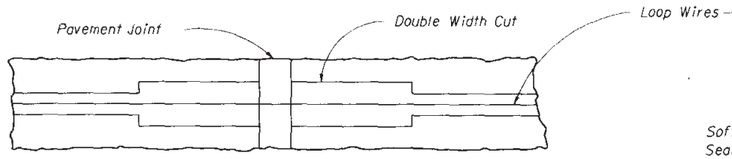

PLAN

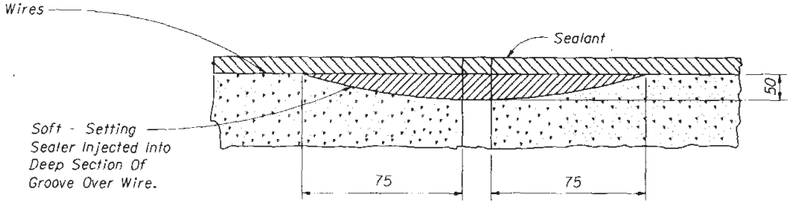

CONCRETE PAVEMENT EXPANSION JOINTS

VERTICAL SECTION

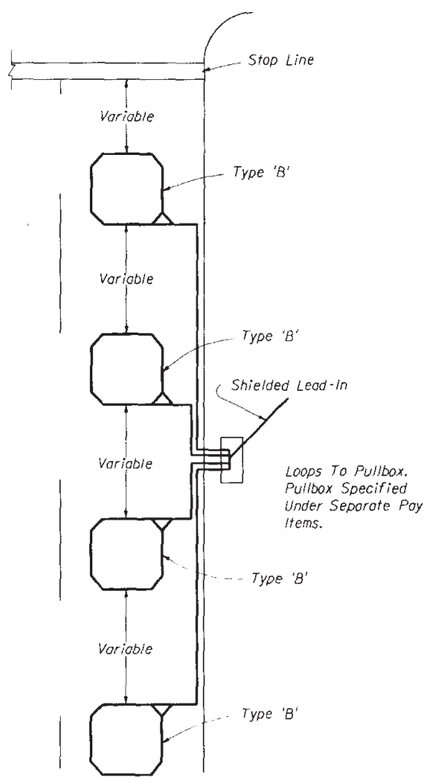

TYPE G

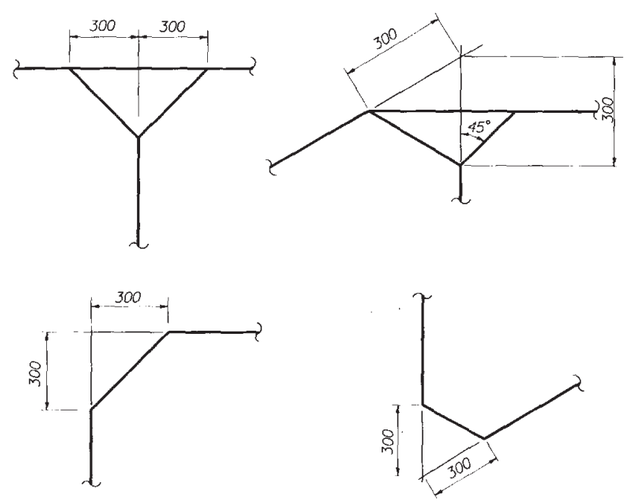

LOOP CORNER AND LEAD-IN DETAILS

Notes:

1. The "number of turns" indicated at the specified point on the loop refers to the number of passes of loop wires which are placed in the saw-cut forming the complete loop.
2. Loop types or details not drawn to scale.
3. Loop Types are centered in a single lane except Type E which is centered on two lanes.
4. The number of individual loops in the Type G loop may vary up to a maximum of four (4).
5. Lead-in may be connected to either end of loop.
6. The leading edge of loop Types A,C,D,& F may extend past the stop line a maximum of 3.0 m. The length of these loops may be extended to a maximum of 18.0 m. Each intersection should be individually designed and if the modifications noted above is required it must be noted or detailed in the plans.
7. Loop lead-in wires should not be installed in the same pull box with signal power cable.

STATE OF FLORIDA DEPARTMENT OF TRANSPORTATION
TRAFFIC DESIGN

VEHICLE LOOP INSTALLATION DETAILS

	Names	Dates	Approved By
Designed By			Clark A. Scott, State Traffic Plans Engineer
Drawn By			
Checked By			
F.H.W.A. Approved:			

Revision No.	Sheet No.	Index No.
94	2 of 2	17781

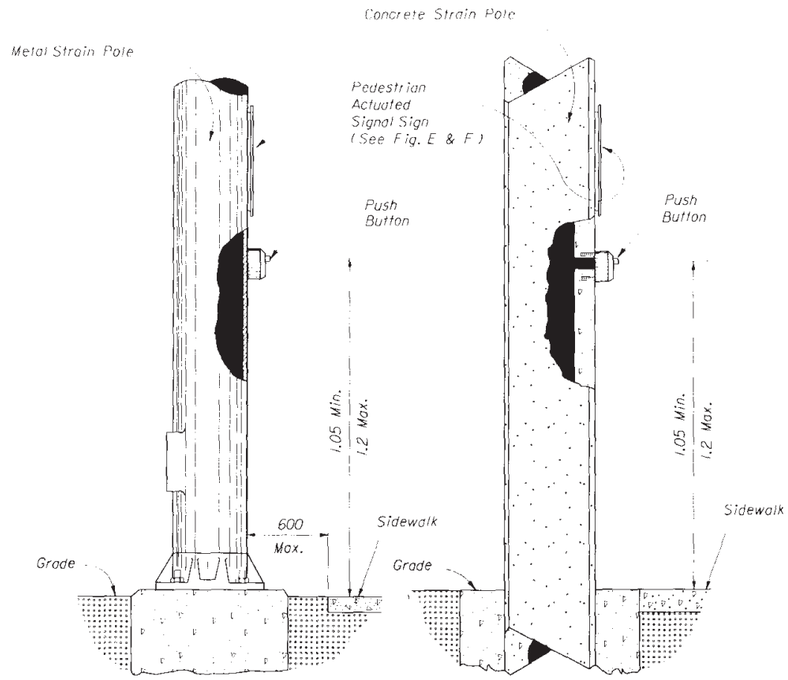

FIGURE A
POLE MOUNTED
DETECTOR STATION

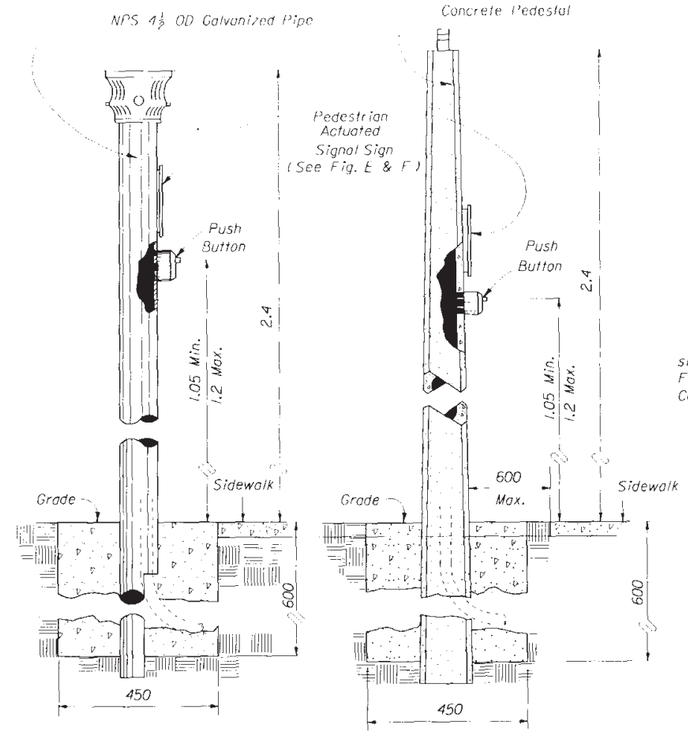

FIGURE B
PEDESTAL STATION
DETECTOR STATION

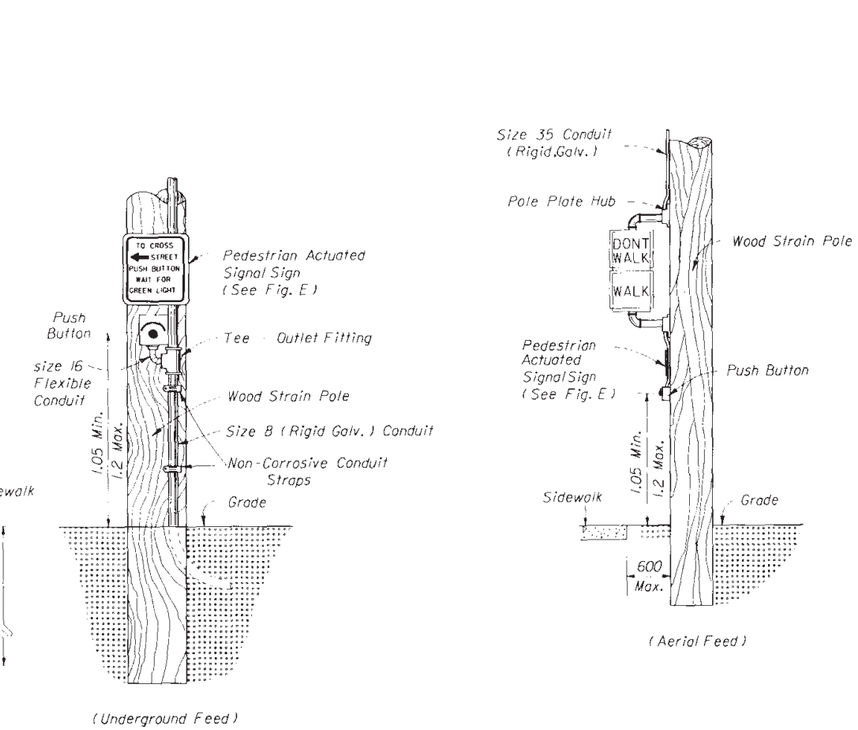

FIGURE C
WOOD POLE MOUNTED
DETECTOR STATION

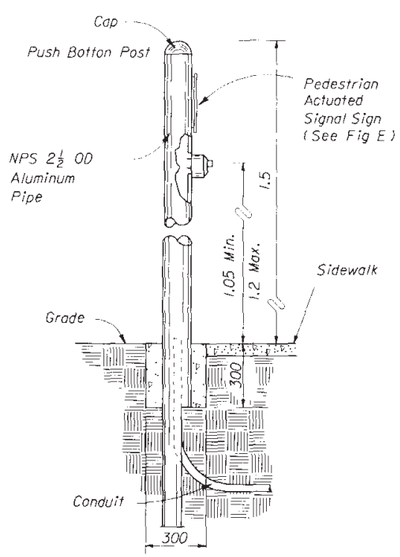

FIGURE D
POST DETECTOR STATION
DETECTOR STATION

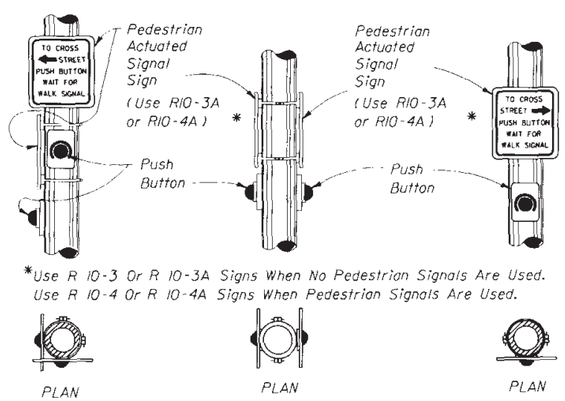

FIGURE E

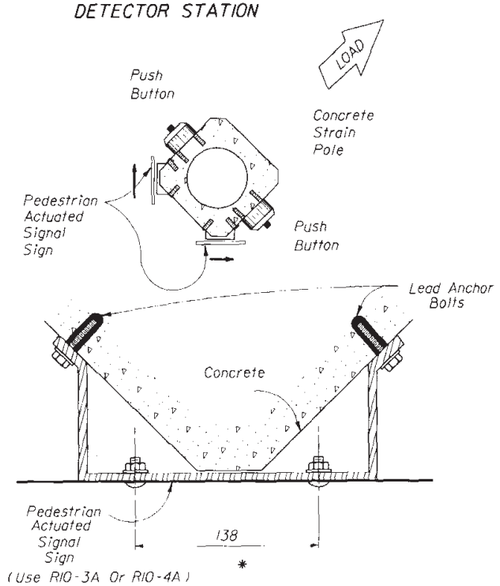

FIGURE F

Notes

1. Signs (R10-3A & R10-4A) shall be mounted above detectors, explaining their purpose and use.
2. The positioning of pedestrian push button should clearly indicate which cross-walk signal is actuated by each push button.
3. Push buttons and signs are to be mounted in accordance with Standard Specifications.
4. Ground to be in accordance with section B620 of Standard Specifications.

STATE OF FLORIDA DEPARTMENT OF TRANSPORTATION
TRAFFIC DESIGN

PEDESTRIAN DETECTOR ASSEMBLY INSTALLATION DETAILS

	Names	Dates	Approved By
Designed By			Clark A Scott
Drawn By			State Traffic Plans Engineer
Checked By			
F.H.W.A. Approved:			

Revision No.	Sheet No.	Index No.
94	1 of 2	17784

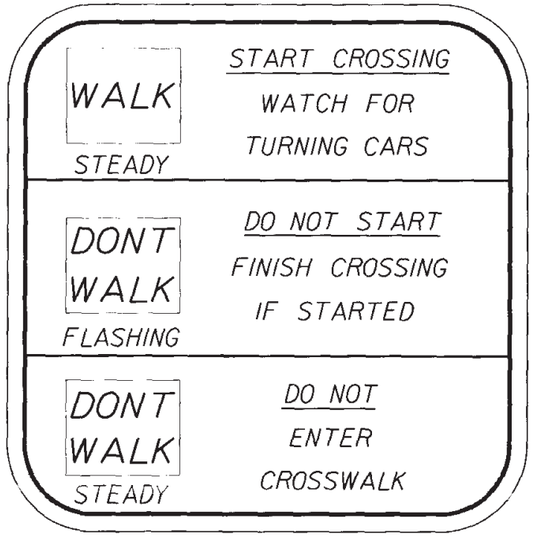

FTP-49

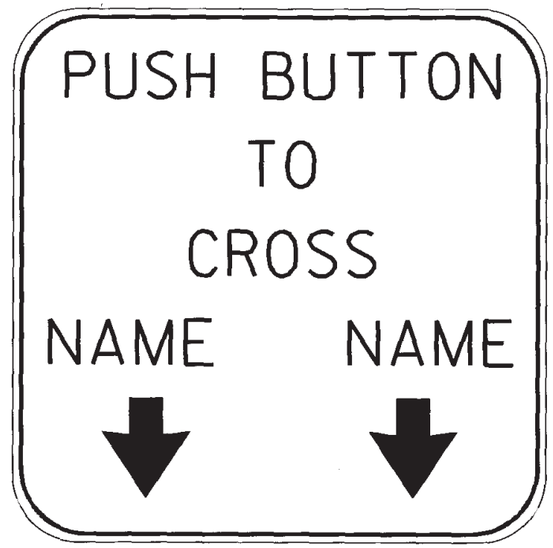

FTP-48

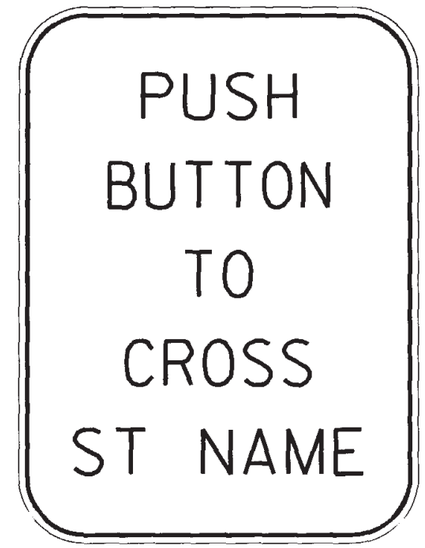

FTP-47

WHITE BACKGROUND WITH BLACK LEGEND AND BORDER
WALK PLAQUE - WHITE LEGEND ON BLACK BACKGROUND
DONT WALK PLAQUE - ORANGE LEGEND ON BLACK BACKGROUND
THE INTERNATIONAL SYMBOLS MAY BE USED FOR WALK AND DONT WALK.

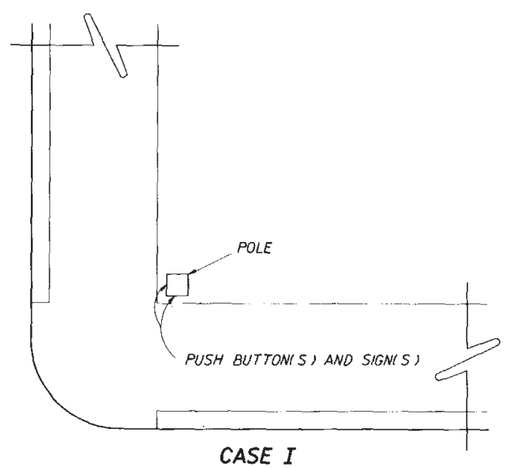

CASE I
POLE PARALLEL TO CURBLINE
ALTERNATE TO FIGURE F

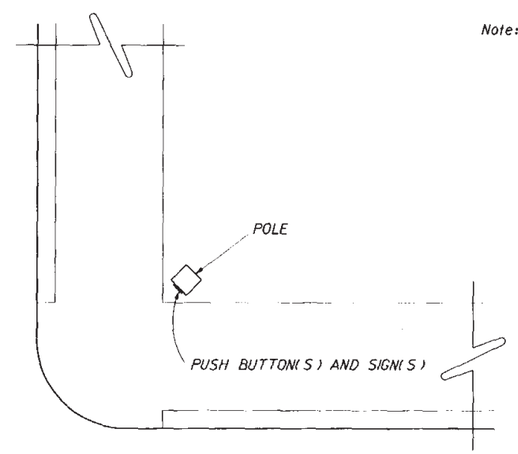

CASE II
POLE DIAGONAL TO CURBLINE

Note:
1. See Index 17355 for sign details.

STATE OF FLORIDA DEPARTMENT OF TRANSPORTATION
TRAFFIC DESIGN

PEDESTRIAN DETECTOR ASSEMBLY INSTALLATION DETAILS

	Names	Dates
Designed By		
Drawn By		
Checked By		
F.H.W.A. Approved:		

Approved By Clark A. Heath
State Traffic Plans Engineer

Revision No.	Sheet No.	Index No.
94	2 of 2	17784

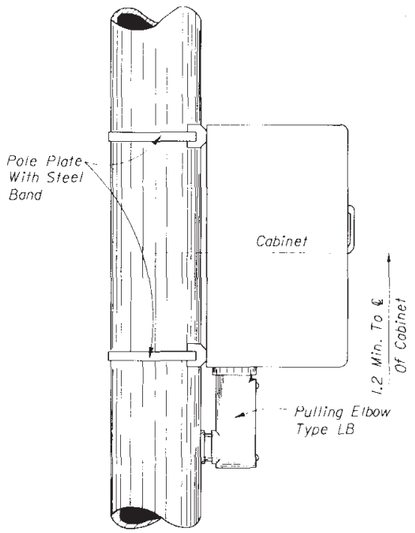

METAL POLE

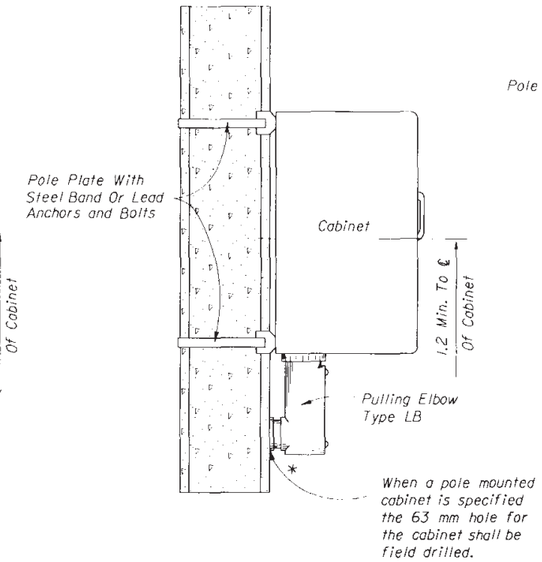

CONCRETE POLE

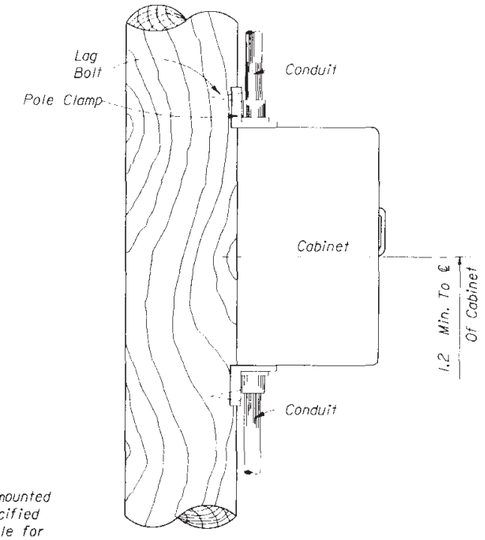

WOOD POLE

Liquid tight flexible conduit is approved for use from the electrical disconnect to the cabinet when both are installed on the same pole.

POLE MOUNTED CABINET

* If holes for cabinet mounting require relocation, original holes shall be filled in with concrete or covered with a non corrosive cover plate.

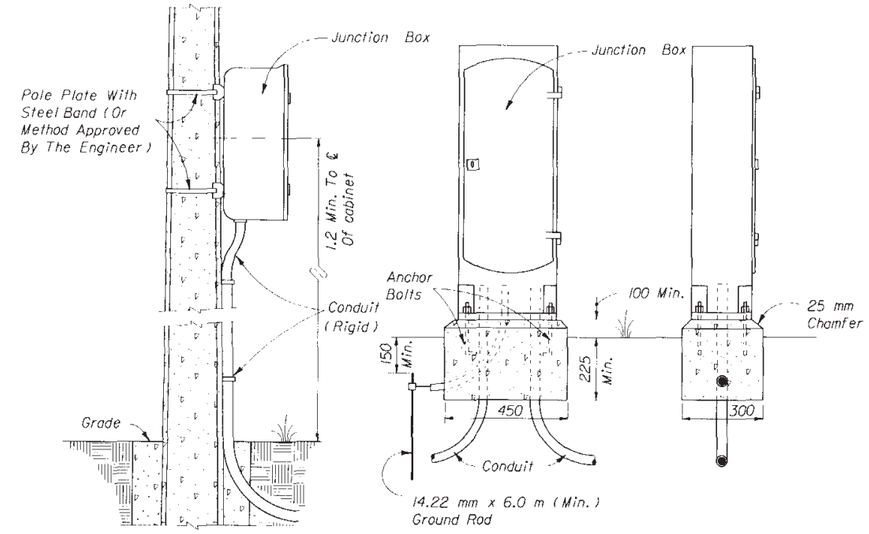

POLE MOUNTED

BASE MOUNTED

INTERCONNECT JUNCTION BOX

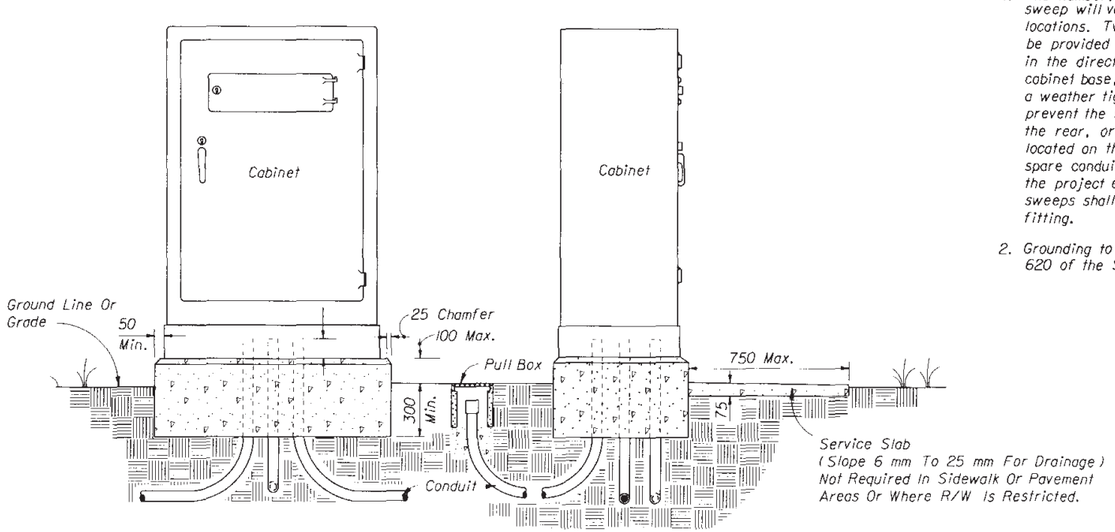

BASE MOUNTED CABINET

Notes:

1. The number, size and orientation of conduit sweep will vary according to site condition or locations. Two spare size 53 PVC conduits shall be provided in all bases. The spares shall exit in the direction of the center rear of the cabinet base, into a pull box and capped with a weather tight fitting. If obstructions prevent the spare conduit from exiting to the rear, or the rear of the cabinet is located on the R/W line, a side exit of the spare conduits will have to be approved by the project engineer. All spare conduit sweeps shall be capped with a weather proof fitting.

2. Grounding to be in accordance with Section 620 of the Standard Specifications.

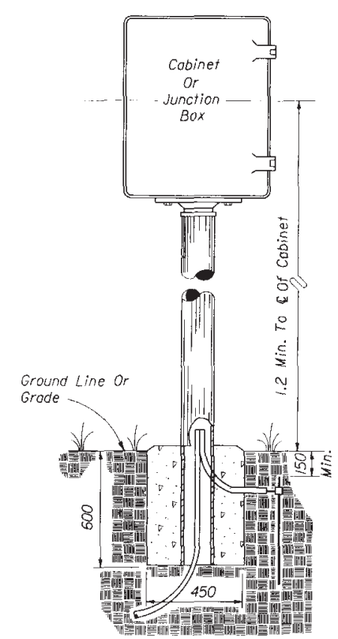

PEDESTAL MOUNTED

STATE OF FLORIDA DEPARTMENT OF TRANSPORTATION
TRAFFIC DESIGN

CABINET INSTALLATION DETAILS

	Names	Dates	Approved By Charles A Scott, State Traffic Plans Engineer
Designed By		09/17/80	
Drawn By		08/24/81	
Checked By			
F.H.W.A. Approved:			

Revision No.	Sheet No.	Index No.
94	1 of 1	17841

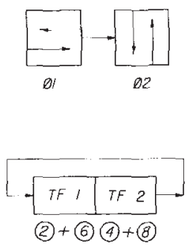

SOP 1

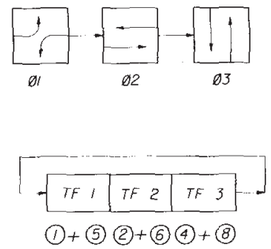

SOP 2

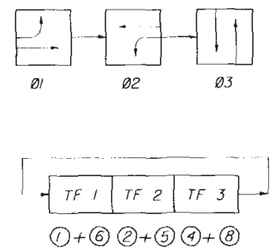

SOP 3

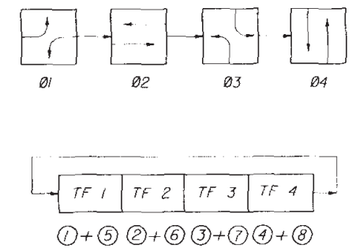

SOP 4

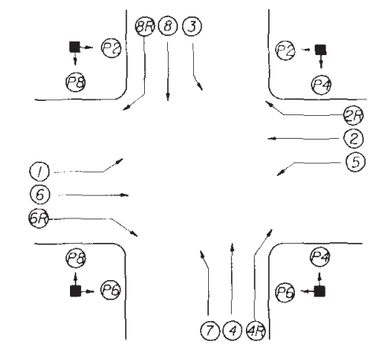

SIGNALIZED INTERSECTION

Vehicle movements & signal head number assignments are not directionally oriented but shall maintain their relative orientation about the intersection (I.E. movements 7 and 4 are always to the right of movements 1 and 6 etc.)

LEGEND

- (X) Vehicle Movement Number
- (PX) Pedestrian Movement Number
- TF X Timing Function Number
- ØX Phase Number
- Green Arrow (Left or Right)
- Red Arrow
- Yellow Arrow

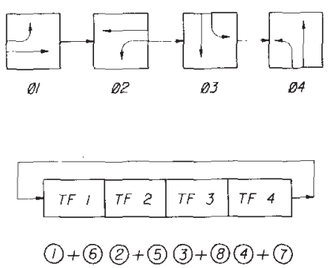

SOP 5

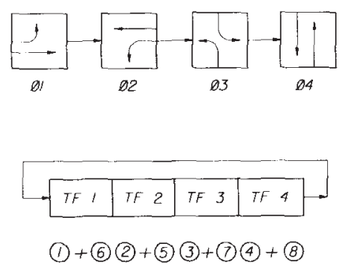

SOP 6

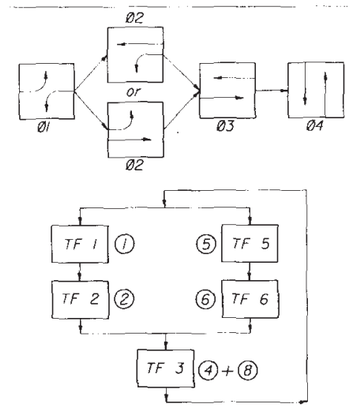

SOP 7

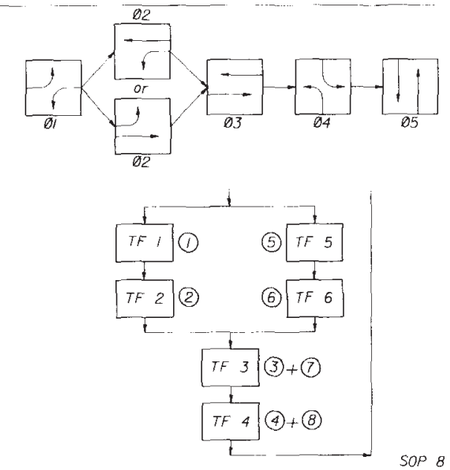

SOP 8

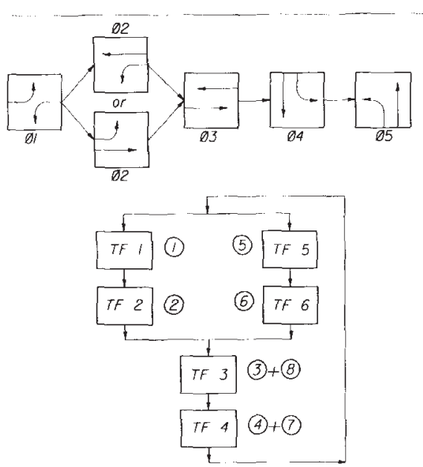

SOP 9

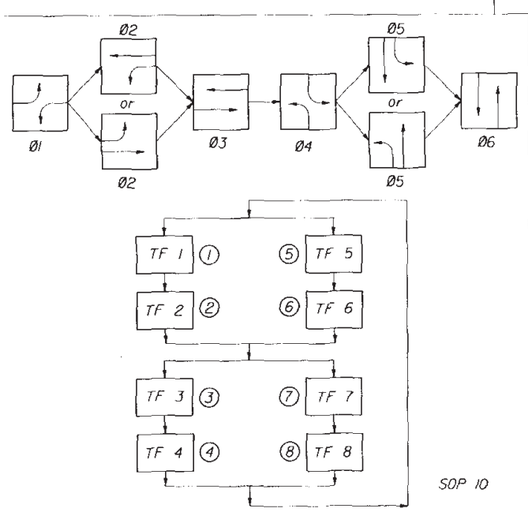

SOP 10

SIGNAL CLEARANCE TABLE

(Blank Indicates No Clearance Required)

To \ From		SIGNAL INDICATIONS							
		R	~~R~~	G	~~G~~	~~G~~*	⇧	WALK	DONT WALK
SIGNAL INDICATIONS	R			Y	Y	~~Y~~	Y		
	~~R~~			Y	Y	~~Y~~	Y		
	G				Y	~~Y~~			
	~~G~~								
	~~G~~*								
	⇧								
	WALK								
	DONT WALK						Flash DONT WALK		

* Clearance Indication When Yellow Arrow Is Used.

STATE OF FLORIDA DEPARTMENT OF TRANSPORTATION
ROAD DESIGN

STANDARD SIGNAL OPERATING PLANS

	Names	Dates
Designed By		
Drawn By		04/26/79
Checked By		

Approved By Clark A Scott

Revision No.	Sheet No.	Index No.
94	1 of 2	17870

F.H.W.A. Approved:

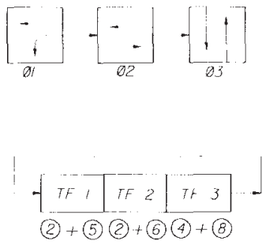

SOP 11

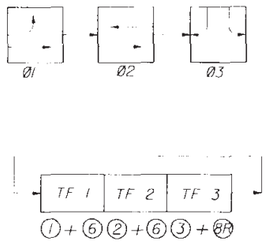

SOP 12

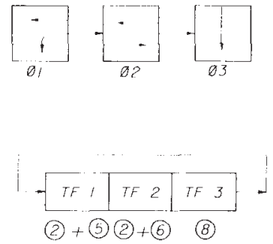

SOP 13
(ONE - WAY STREET INTERSECTION)

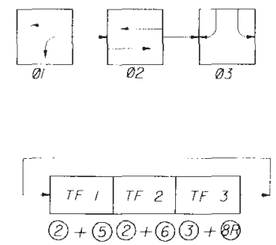

SOP 14
(DIAMOND INTERCHANGE OPERATION)

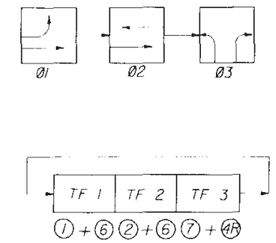

SOP 15
(DIAMOND INTERCHANGE OPERATION)

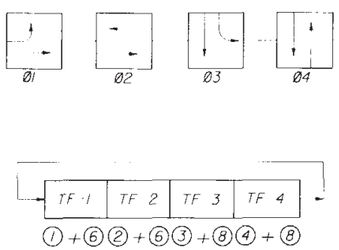

SOP 16

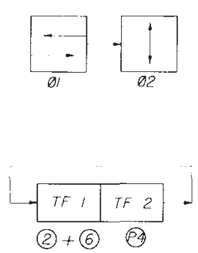

SOP 17
(MID - BLOCK)

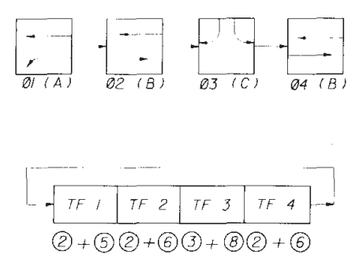

NOTE:
Only Ø2 Or Ø4 Used, Not Both To Obtain
ABC, Or ACB Operation.

SOP 18
(DIAMOND INTERCHANGE OPERATIONS)

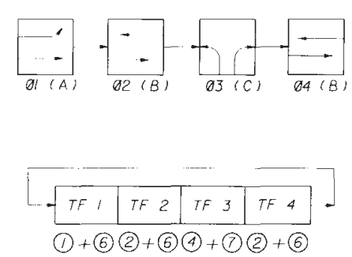

NOTE:
Only Ø2 Or Ø4 Used, Not Both To Obtain
ABC, Or ACB Operation.

SOP 19
(DIAMOND INTERCHANGE OPERATIONS)

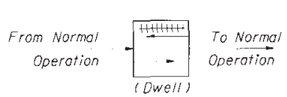

POP 1

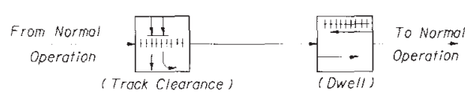

POP 2

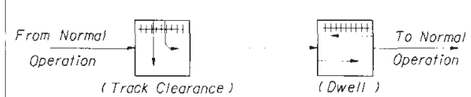

POP 3

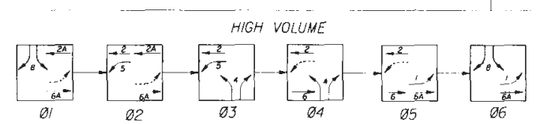

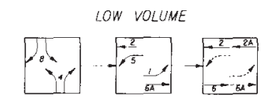

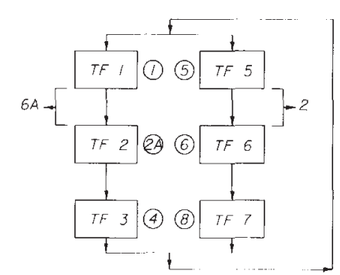

SOP 20
(DIAMOND INTERCHANGE OPERATIONS)

STATE OF FLORIDA DEPARTMENT OF TRANSPORTATION
ROAD DESIGN

STANDARD SIGNAL OPERATING PLANS

	Names	Dates
Designed By		
Drawn By		09/28/79
Checked By		

Approved By Clark A. Scott
State Traffic Plans Engineer

Revision No.	Sheet No.	Index No.
94	2 of 2	17870

F.H.W.A. Approved:

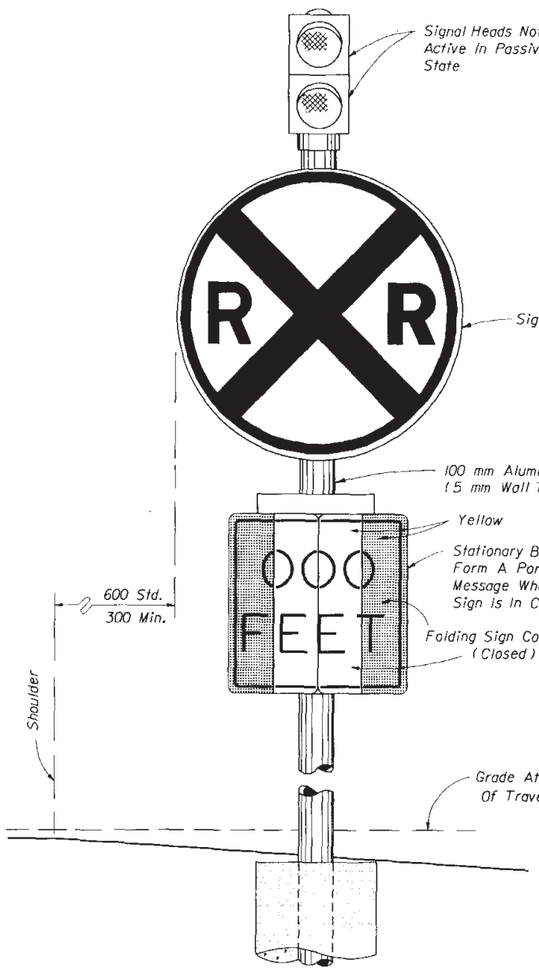

FRONT VIEW

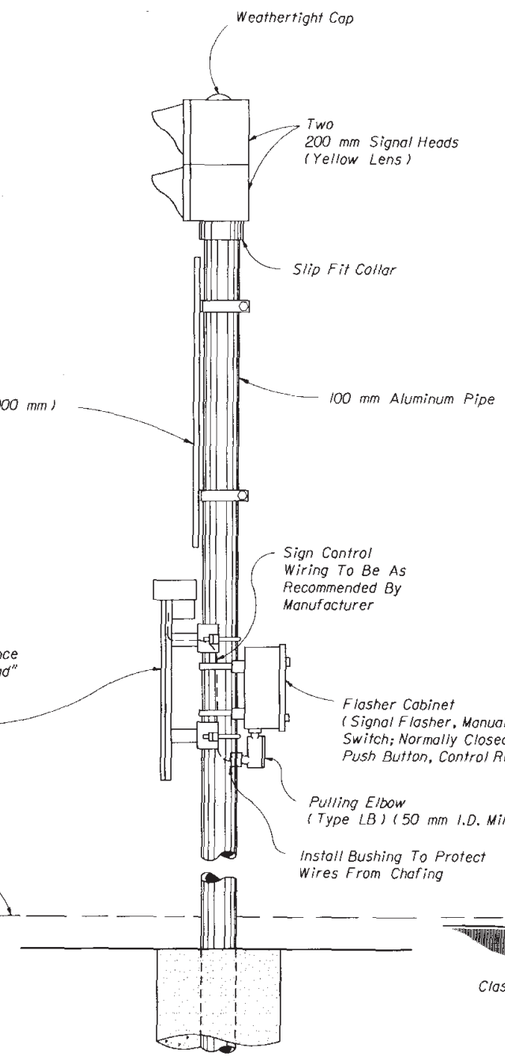

SIDE VIEW

PASSIVE STATE

(TRAIN CIRCUIT NOT ACTUATED)

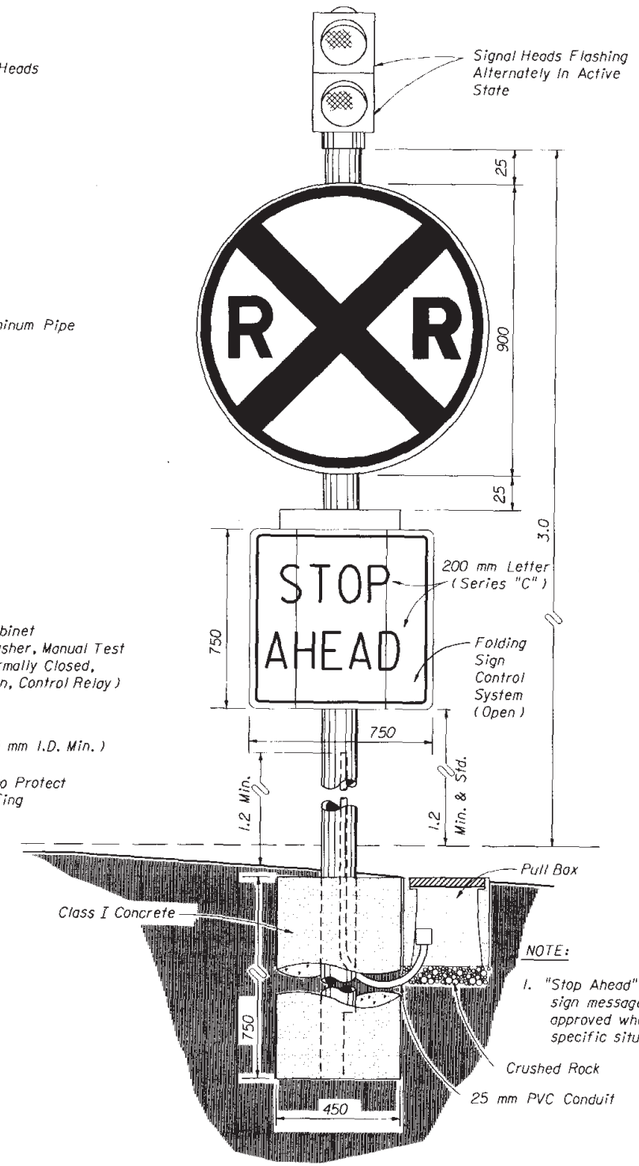

FRONT VIEW

ACTIVE STATE

(TRAIN CIRCUIT ACTUATED)

NOTE:

1. "Stop Ahead" is standard and preferred sign message. Another message may be approved when appropriate for specific situations.

LOCATION OF THE ADVANCE WARNING SIGN

SPEED M.P.H.	SPEED km/h	DISTANCE meters
30	50	60.0
40	60	83.0
50	80	105.0
55	90	128.0

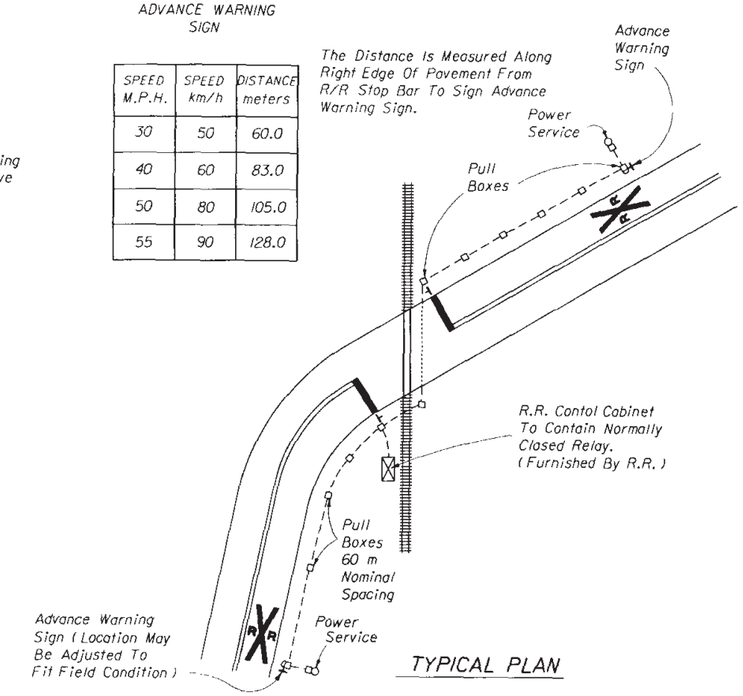

TYPICAL PLAN

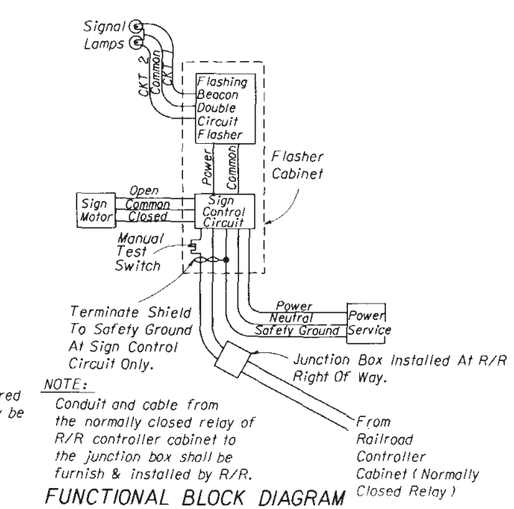

NOTE:

Conduit and cable from the normally closed relay of R/R controller cabinet to the junction box shall be furnish & installed by R/R.

FUNCTIONAL BLOCK DIAGRAM

STATE OF FLORIDA DEPARTMENT OF TRANSPORTATION
TRAFFIC DESIGN

ADVANCE WARNING FOR R.R. CROSSING

	Names	Dates
Designed By		12/12/75
Drawn By		
Checked By		12/12/75

Approved By: Charles A. Scott

Revision No.	Sheet No.	Index No.
94	1 of 1	17881

F.H.W.A. Approved:

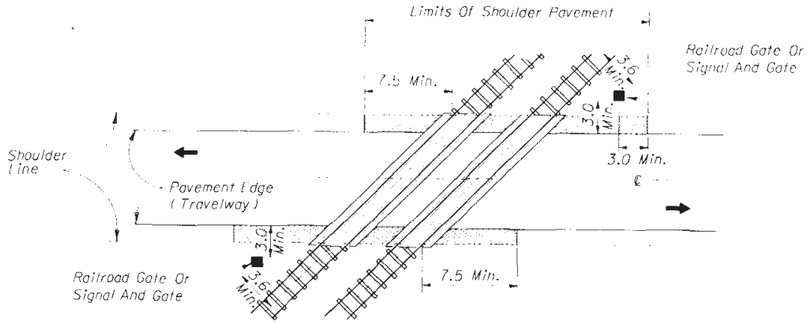

TRACK CLEARANCE FOR ACUTE OR RIGHT ANGLE CROSSINGS

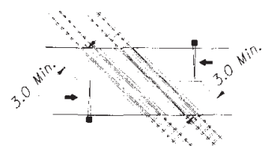

Typical Location Plan For Gate Or Flashing Signal With Gate When Tracks Are At Obtuse Angle.

Note :
It is intended that the full shoulder width of the existing roadway be paved. where an existing shoulder is substantially substandard for the facility involved, the shoulder width should be upgraded to meet current standards.

SIGNAL PLACEMENT AT RAILROAD CROSSING
(2 - LANE DESIGN)

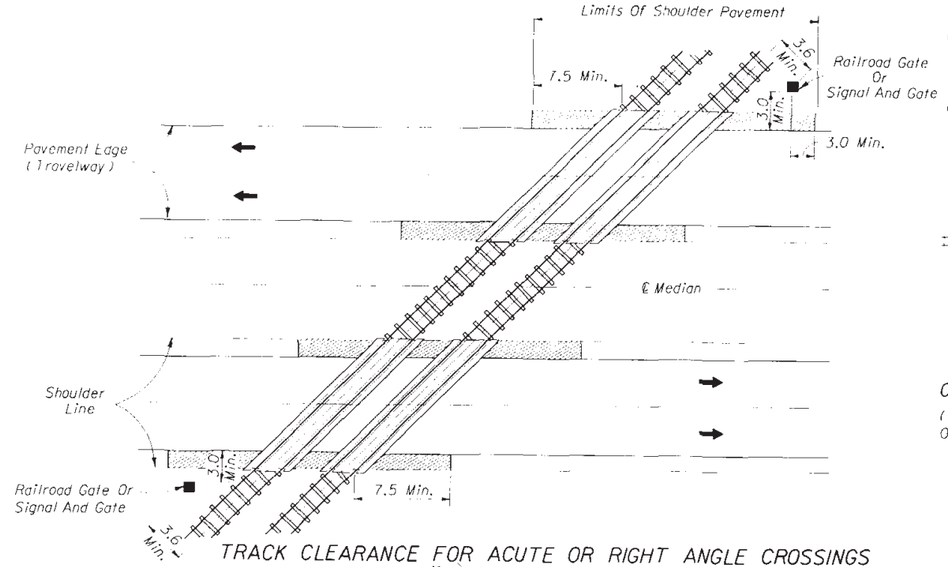

TRACK CLEARANCE FOR ACUTE OR RIGHT ANGLE CROSSINGS

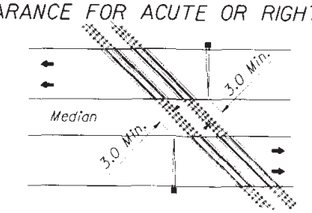

Typical Location Plan For Gate Or Flashing Signal With Gate When Tracks Are At Obtuse Angle.

SIGNAL PLACEMENT AT RAILROAD CROSSING
(4 - LANE DESIGN)

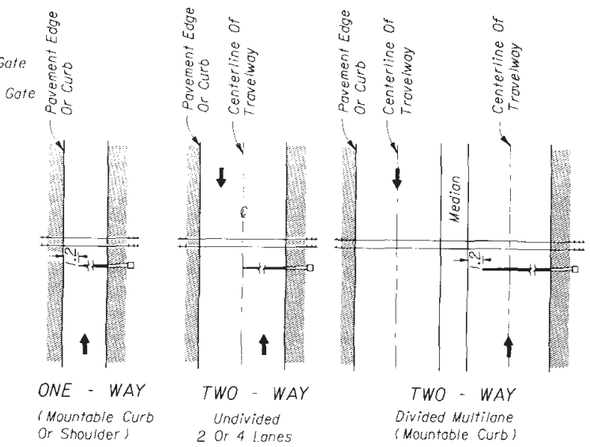

Note :
Arrows denote direction of travel not lane indication

FIGURE I
Gate Length Requirements
See Note 6 Sheet 3

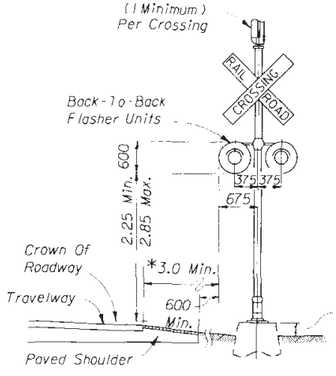

TYPE I

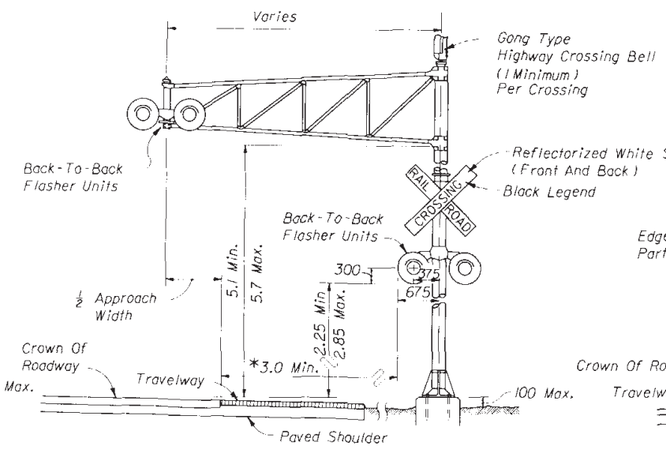

TYPE II

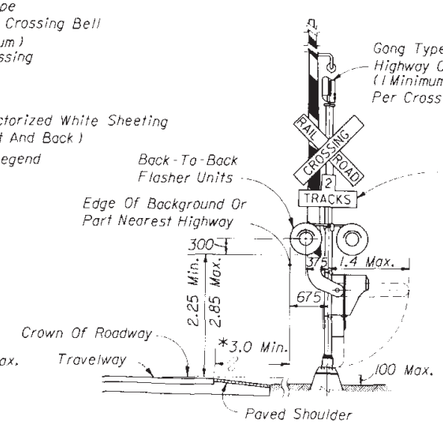

TYPE III

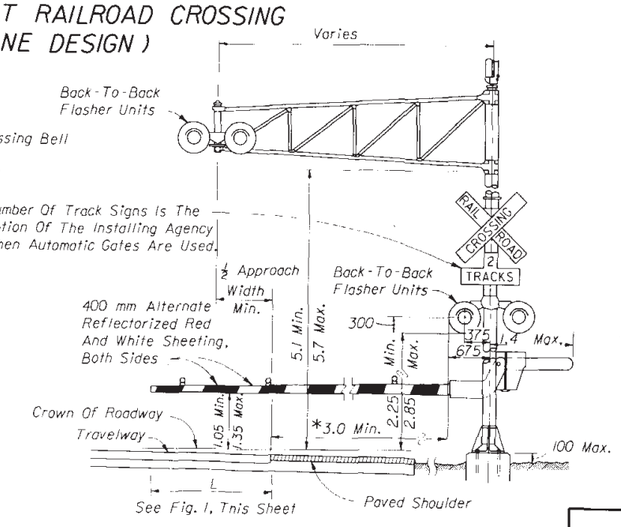

TYPE IV

*Desireable minimum - where field conditions dictate absolute minimum may be as per Index No. 700.

Note :
Two separate foundations may be required (one for signals, one for gate), depending on type of equipment used.

General Notes

1. No guardrail is proposed for signals; however, some form of impact attenuation device may be specified for certain locations.
2. Advance flasher to be installed when and if called for in plans or specifications.
3. Top of foundation shall be no higher than 100 mm above finished shoulder grade.
4. Type of traffic control device
   - I Flashing signals
   - II Flashing signals with cantilever
   - III Flashing signals with gate
   - IV Flashing signals with cantilever & gate
   - V Gate
5. Class of traffic control devices
   - I Flashing signals - one track
   - II Flashing signals - multiple tracks
   - III Flashing signals and gates - one track
   - IV Flashing signals and gates - multiple tracks

STATE OF FLORIDA DEPARTMENT OF TRANSPORTATION
TRAFFIC DESIGN

RAILROAD GRADE CROSSING TRAFFIC CONTROL DEVICES

	Names	Dates	Approved By: Clark G. Scott, State Traffic Plans Engineer
Designed By		04/08/76	
Drawn By			
Checked By		04/08/76	
F.H.W.A. Approved:			

Revision No.	Sheet No.	Index No.
94	1 of 4	17882

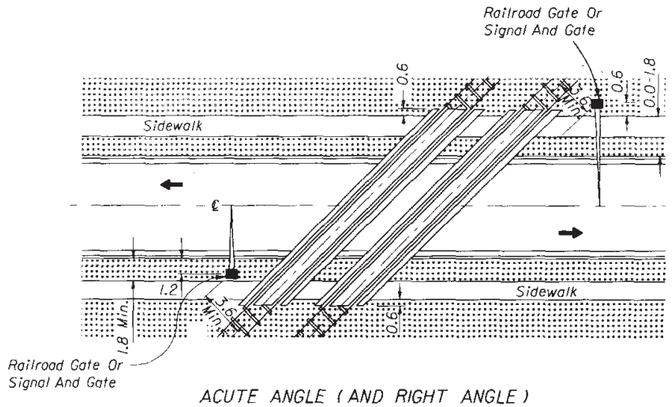

ACUTE ANGLE (AND RIGHT ANGLE)

SIGNAL PLACEMENT AT RAILROAD CROSSING (2 LANES, CURB & GUTTER)

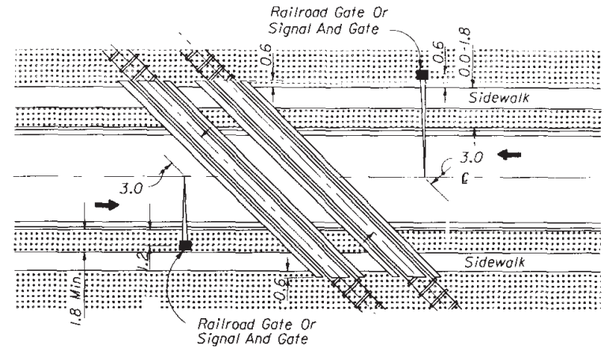

OBTUSE ANGLE

SIGNAL PLACEMENT AT RAILROAD CROSSING (2 LANES, CURB & GUTTER)

GENERAL NOTES

1. The location of flashing signals and stop lines shall be established based on future (or present) installation of gate with appropriate track clearances.
2. Where plans call for railroad traffic control devices to be installed in curbed medians, the minimum median width shall be 3.7 m.
3. Location of railroad traffic control device is based on the distance available between face of curb & sidewalk.
   0 m to 1.8 m - Locate device outside sidewalk.
   Over 1.8 m - Locate device between face of curb and sidewalk.
4. Stop line to be perpendicular to edge of roadway, approx. 4.5 m from nearest rail; or 2.4 m from and parallel to gate when present.

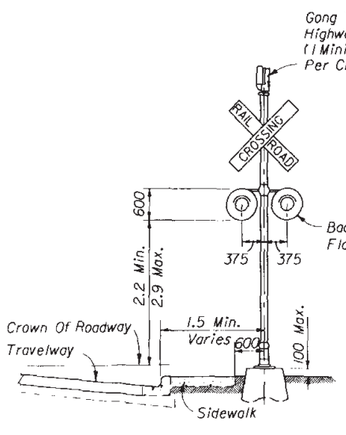

TYPE I

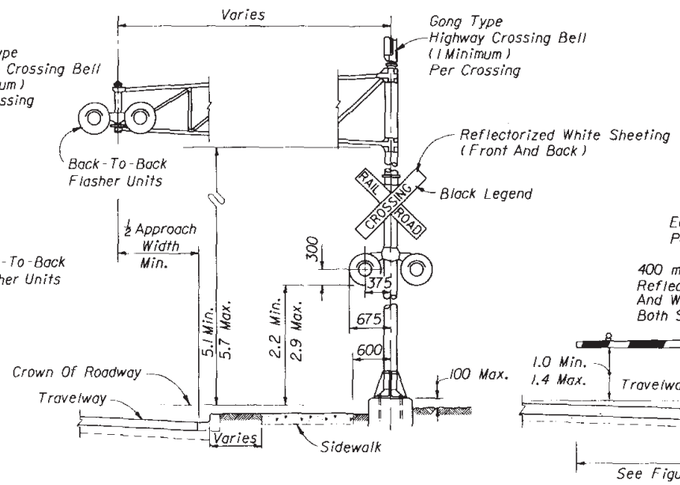

TYPE II

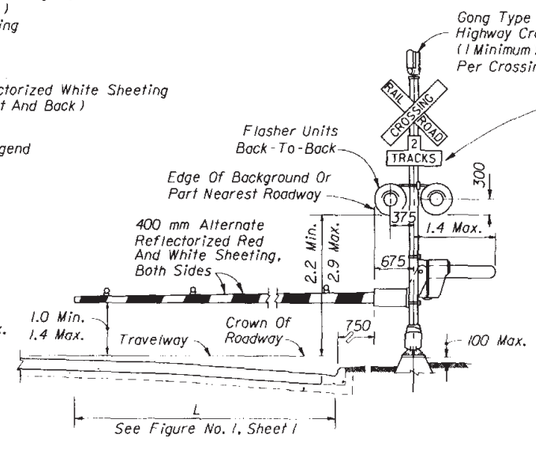

TYPE III

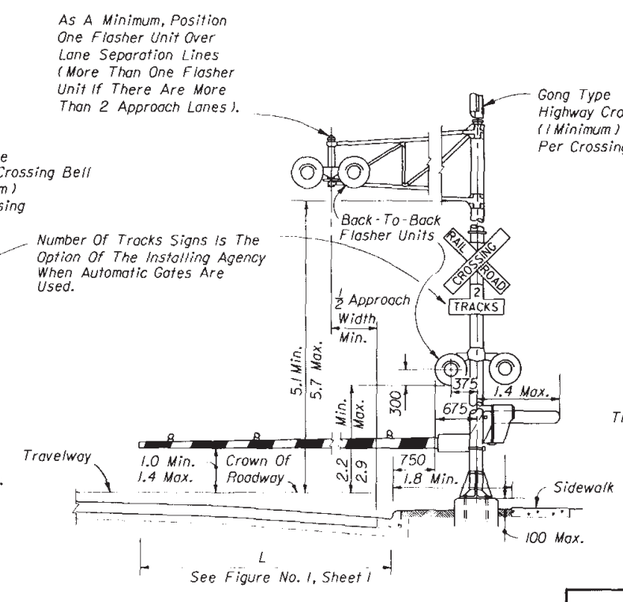

TYPE IV

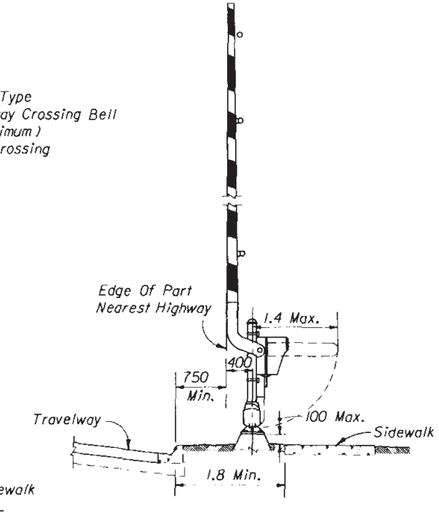

TYPE V

STATE OF FLORIDA DEPARTMENT OF TRANSPORTATION
TRAFFIC DESIGN

RAILROAD GRADE CROSSING TRAFFIC CONTROL DEVICES

	Names	Dates	Approved By
Designed By		04/08/76	Charles A. Scott
Drawn By			
Checked By		04/08/76	
F.H.W.A. Approved:			

Revision No.	Sheet No.	Index No.
94	2 of 4	17882

RAILROAD CROSSING AT TWO (2) - LANE ROADWAY

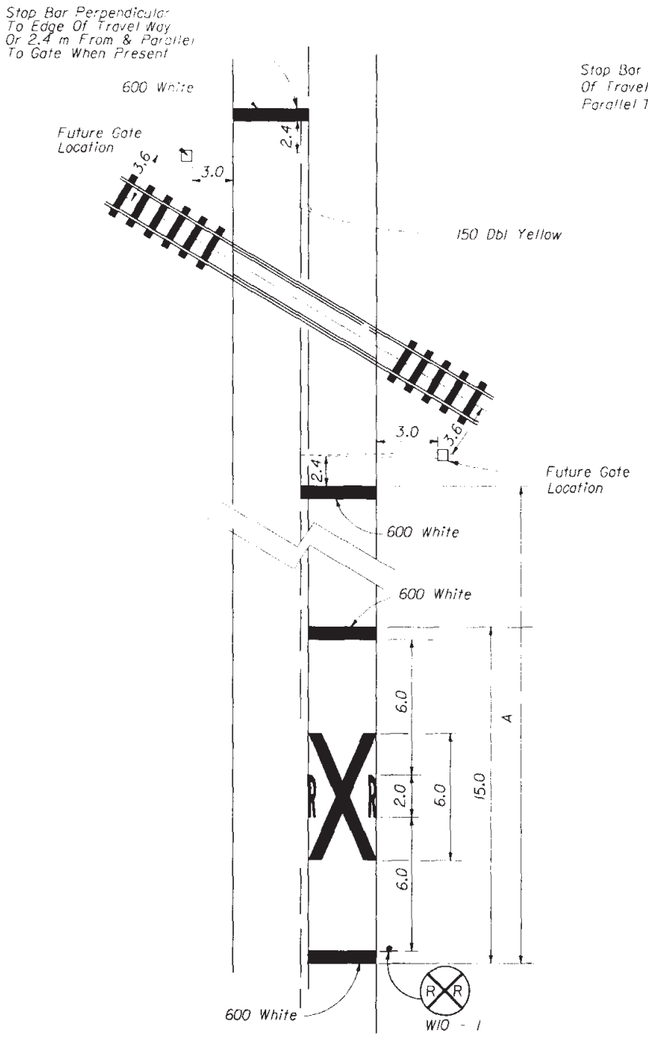

RAILROAD CROSSING AT MUTI-LANE ROADWAY

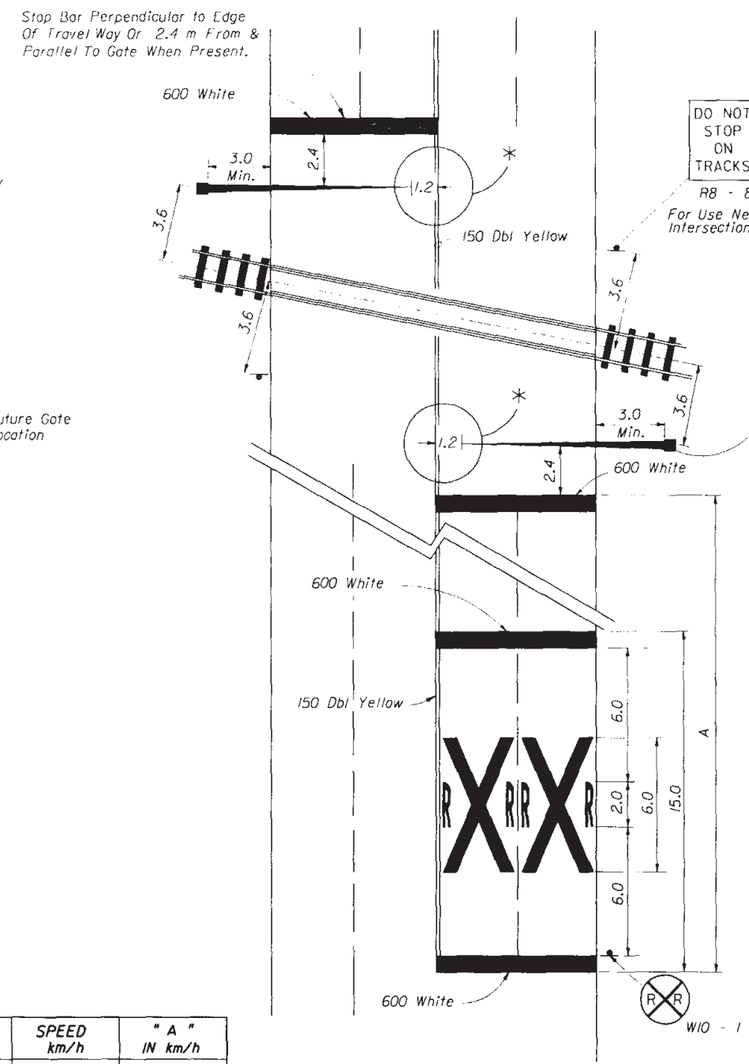

RELATIVE LOCATION OF CROSSING TRAFFIC CONTROL DEVICES

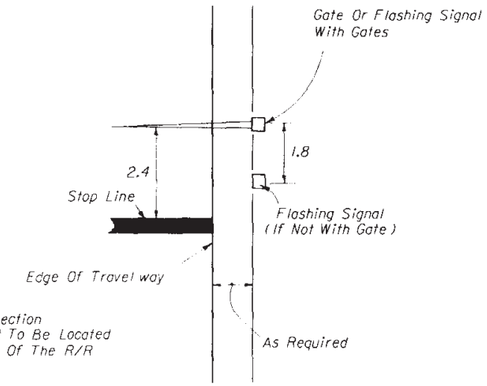

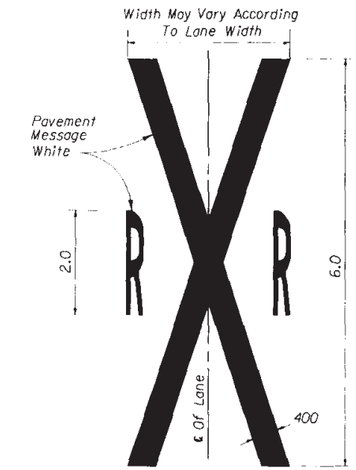

NOTES:

1. When computing pavement message, quantities do not include transverse lines.
2. Placement of sign W10-1 in a residential or business district, where low speeds are prevalent, the W10-1 sign may be placed a minimum distance of 30.0 m from the crossing. Where street intersections occur between the R R pavement message and the tracks an additional W10-1 sign and additional pavement message should be used.
3. Recommended location for sign FTP-38, 30.0 m Urban & 90.09 m Rural in advance of the crossing.
4. A portion of the pavement markings symbol should be directly opposite the W10-1 sign.
5. Recommended location for FTP-38 A or B signs, 30.0 m urban and 90.0 m rural. See index 17355 for sign details.

* 6. Gate Length Requirements

For two-way undivided sections:
The gate should extend to within 300 mm of the center line. On multilane approaches the maximum gate length may not reach to within 300 mm of the center line. For those cases, the distance from the gate to the center line shall be a maximum of 1.2 m.

For one-way or divided sections:
The gate shall be of sufficient length such that the distance from the gate tip to the inside edge of pavement is a maximum of 1.2 m.

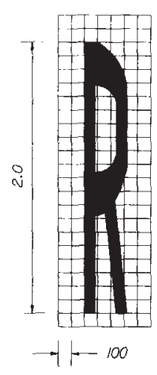

SPEED MPH	SPEED km/h	" A " IN km/h
60	100	165.0
55	90	135.0
50	80	112.5
45	70	90.0
40	60	67.5
35	60	45.0
30	50	30.0
URBAN		15.0 MIN.

STATE OF FLORIDA DEPARTMENT OF TRANSPORTATION
TRAFFIC DESIGN

RAILROAD GRADE CROSSING TRAFFIC CONTROL DEVICES

	Names	Dates
Designed By		10/26/77
Drawn By		
Checked By		

Approved By Charles G. Scott
State Traffic Plans Engineer

Revision No.	Sheet No.	Index No.
94	3 of 4	17882

F.H.W.A. Approved:

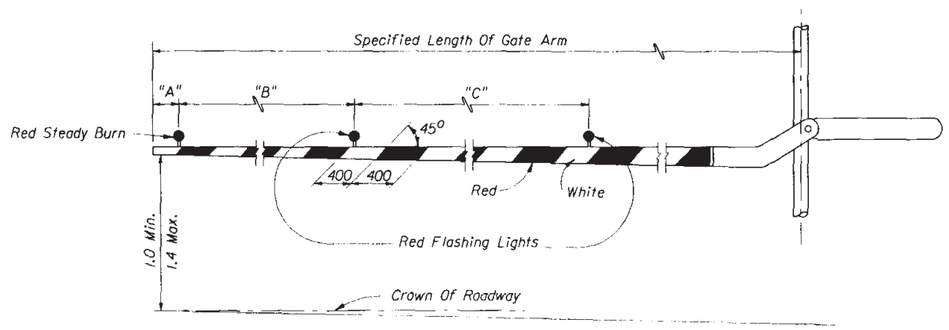

RAILROAD GATE ARM LIGHT SPACING

Specified Length Of Gate Arm	Dimension "A"	Dimension "B"	Dimension "C"
4.2	150	900	1.5
4.5	450	900	1.5
4.8-5.39	600	900	1.5
5.4-5.99	700	1025	1.5
6.0-7.19	700	1.2	1.5
7.2-8.69	700	1.5	1.5
8.7-9.59	900	1.8	1.8
9.6-10.49	900	2.1	2.1
10.5-11.39	900	2.7	2.7
11.4 And Over	900	3.0	3.0

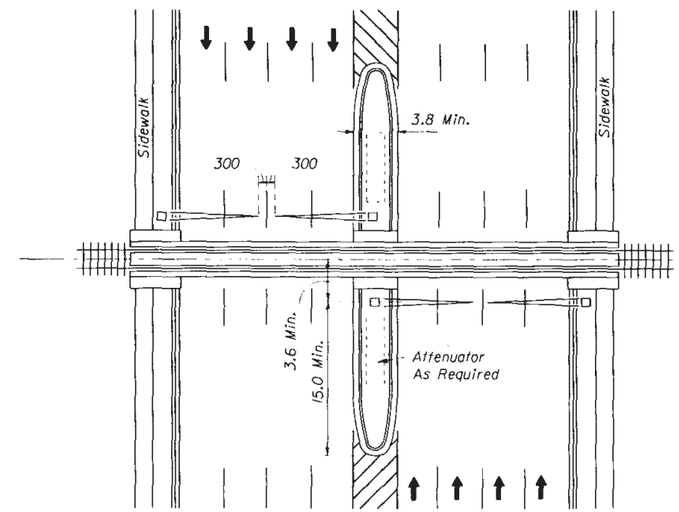

PLAN

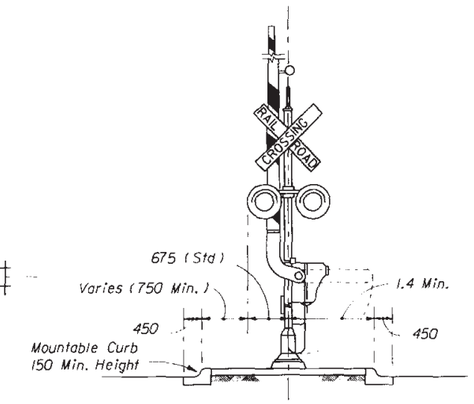

MEDIAN SECTION AT SIGNAL GATES

NOTE :

For additional information see the "Manual On Uniform Traffic Control Devices", Part VIII; The "Traffic Control Devices Handbook", Part VIII; and AASHTO "A Policy On Geometric Design Of Streets And Highways", 1984.

MEDIAN SIGNAL GATES FOR MULTI LANE UNDIVIDED URBAN SECTIONS

(FOUR OR MORE DRIVING LANES IN ONE DIRECTION, 45 mph (70 km/h) OR LESS)

STATE OF FLORIDA DEPARTMENT OF TRANSPORTATION
TRAFFIC DESIGN

RAILROAD GRADE CROSSING TRAFFIC CONTROL DEVICES

	Names	Dates
Designed By		10/15/85
Drawn By		10/15/85
Checked By		

Approved By

Revision No.	Sheet No.	Index No.
94	4 of 4	17882

F.H.W.A. Approved:

TYPICAL BRIDGE MOUNTS

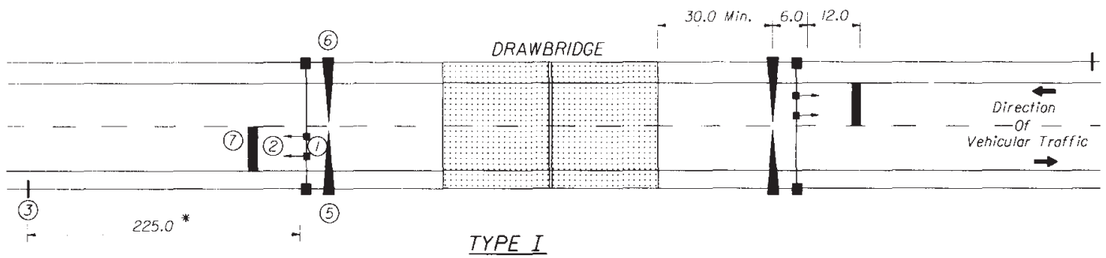

TYPE I

TO BE USED WHERE BRIDGE OPERATORS ARE FULL TIME OR A DAILY BASIS

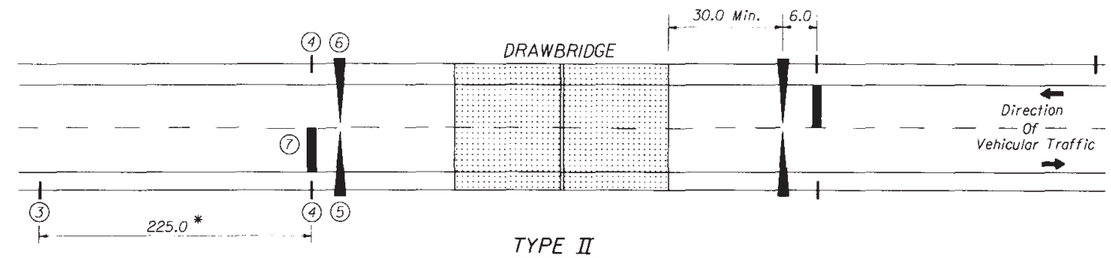

TYPE II

TO BE USED WHERE TYPE I IS NOT APPLICABLE (USUALLY WHEN THE BRIDGE OPERATOR IS "ON CALL")

* Field conditions may require adjustment of this standard distance.

SEQUENCE CHART

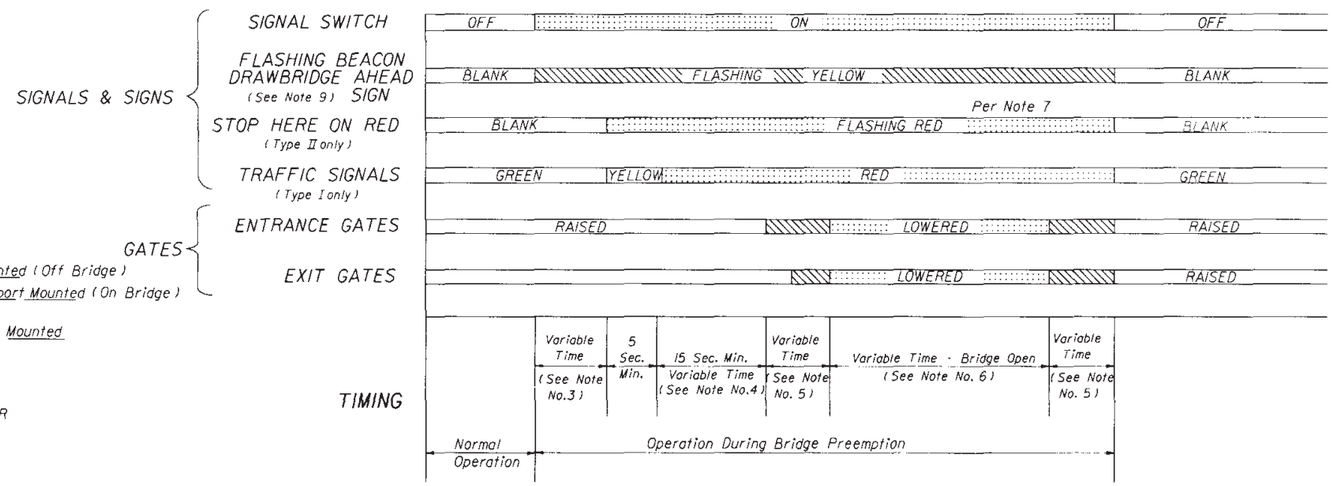

LEGEND

1. TRAFFIC SIGNALS — Mast Arm Mounted (Off Bridge)
2. DRAWBRIDGE SIGN — Monotube Support Mounted (On Bridge)
3. DRAWBRIDGE AHEAD SIGN — Ground Mounted
4. STOP HERE ON RED SIGN — Ground Mounted
5. ENTRANCE GATE
6. EXIT GATE
7. 600 mm THERMOPLASTIC STOP BAR

NOTES:

1. A bypass switch shall be installed to override each timing interval in case of a malfunction.
2. "STOP HERE ON RED" is omitted in Type I operation and "TRAFFIC SIGNALS" are omitted in Type II operation.
3. The time between beginning of flashing yellow on "Drawbridge Ahead" sign and the clearance of traffic signal to red, or beginning of flashing red should not be less than the travel time of a passenger car, from the sign location to the stop line, traveling at the 85 percentile approach speed.
4. Beginning of operation of drawbridge gates shall not be less than 15 seconds after steady red or 20 seconds after flashing red (Actual time may be determined by the bridge tender.)
5. Time of gate lowering and raising is dependent upon gate type.
6. Time of bridge opening is determined by the bridge tender.
7. Each gate shall be operated by a separate switch.
8. On each approach (Type II), all four red signals shall be on the same two circuit flashers, with the two top signals on one circuit, and the two bottom signals on the alternately flashing circuit.
9. A Drawbridge Ahead sign is required for both types of signal operation. However a flashing beacon shall be added to the sign when physical conditions prevent a driver traveling at the 85% approach speed from having continuous view of at least one signal indication for approximately 10 seconds.
10. Requirements on gate installation are contained in Section 4E-14 through 4E-17 of the Manual on Uniform Traffic Control Devices.

STATE OF FLORIDA DEPARTMENT OF TRANSPORTATION
TRAFFIC DESIGN

TRAFFIC CONTROL DEVICES FOR MOVABLE SPAN BRIDGE SIGNALS

	Names	Dates	Approved By
Designed By		04/07/75	Charles A Scott
Drawn By		04/07/75	
Checked By			

Revision No.	Sheet No.	Index No.
94	1 of 3	17890

F.H.W.A. Approved:

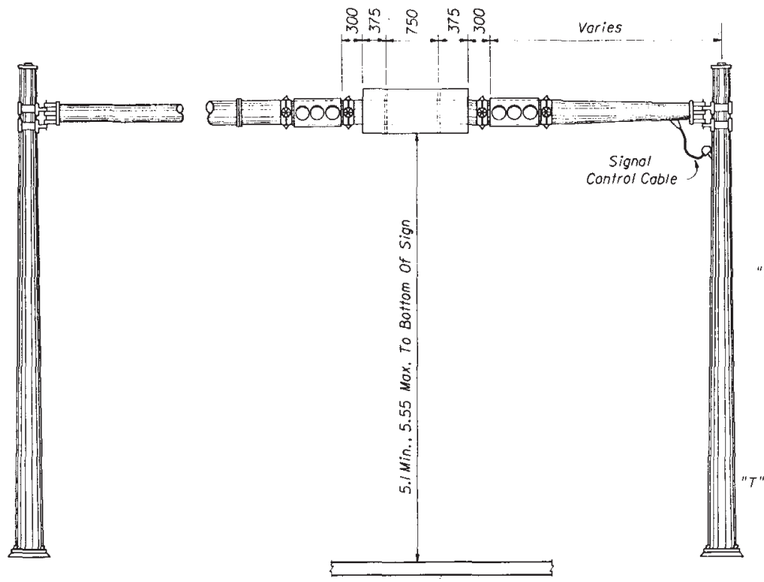

FIGURE - A

MONOTUBE SUPPORT MOUNTING

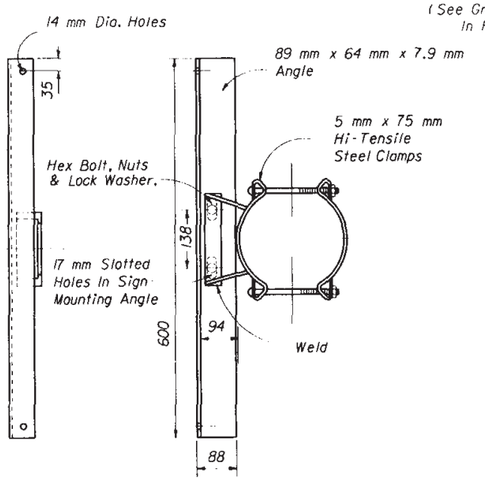

SIGN PANEL MOUNTING ASSEMBLY

FIGURE - B

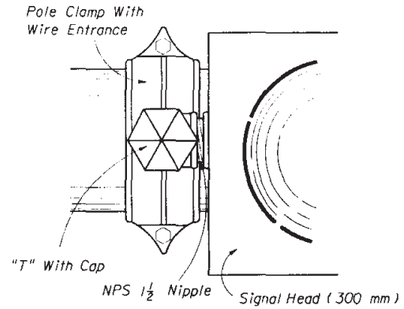

FIGURE - C

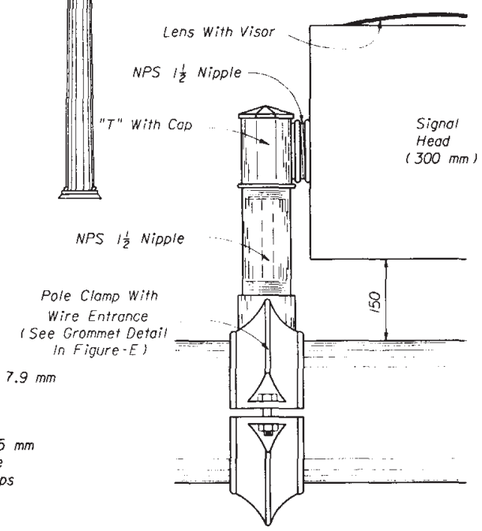

FIGURE - D

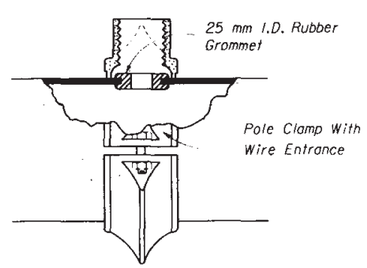

FIGURE - E

SIGNAL HEAD MOUNTING ASSEMBLY

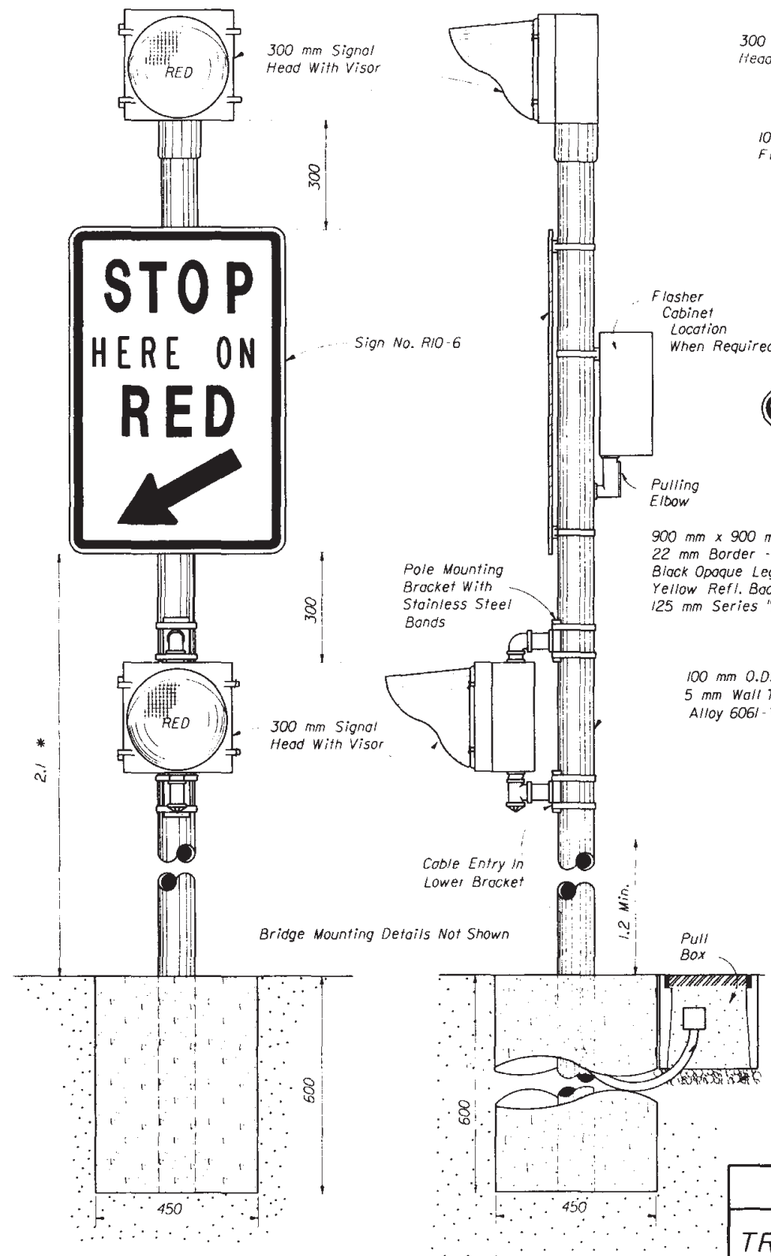

FIGURE - F

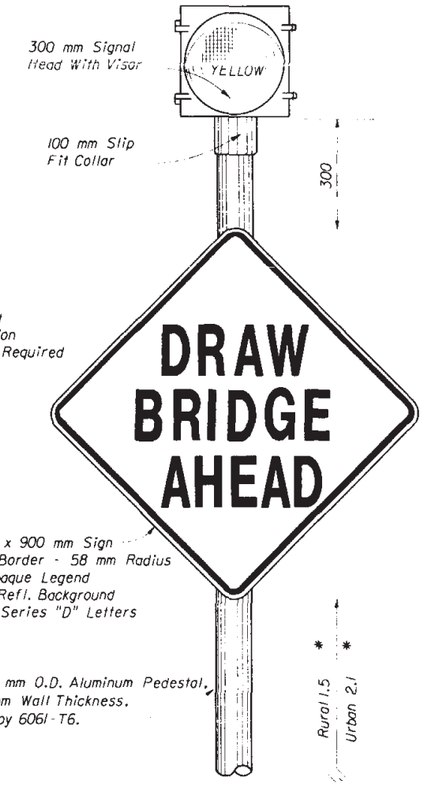

FIGURE - G

* Measured from the bottom of the sign to the near edge of the pavement. Horizontal distance between edge of the pavement and inside edge of sign will vary with condition at job site.

SIZE 27 PVC Conduit

Crushed Rock

STATE OF FLORIDA DEPARTMENT OF TRANSPORTATION
TRAFFIC DESIGN

TRAFFIC CONTROL DEVICES FOR MOVABLE SPAN BRIDGE SIGNALS

	Names	Dates	Approved By
Designed By		04 07 75	Charles [illegible]
Drawn By			
Checked By		04 07 75	

F.H.W.A. Approved:	Revision No.	Sheet No.	Index No.
	94	2 of 3	17890

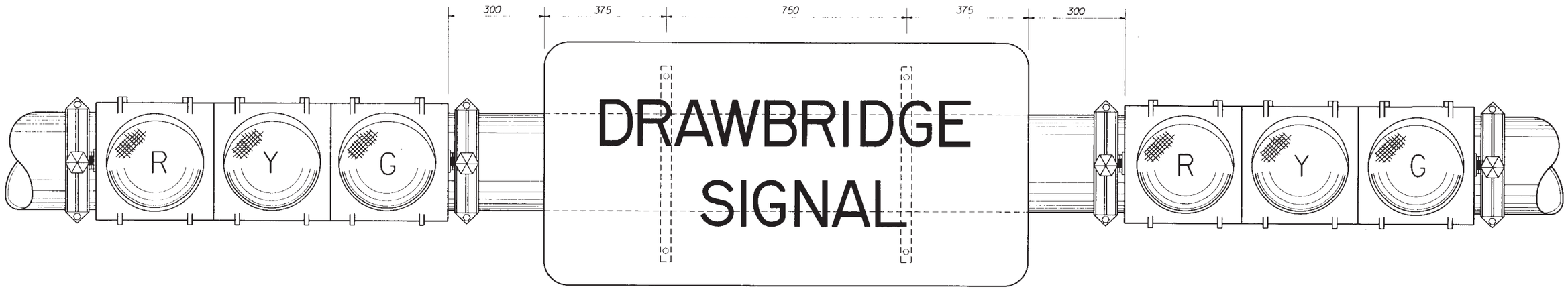

750 x 1500
50 mm Border-100 mm Radius
150 mm Series "D" Letters

BLACK OPAQUE LEGEND AND BORDER ON REFLECTORIZED YELLOW BACKGROUND

TO BE USED WITH TYPE I OPERATION, AS SHOWN ON PREVIOUS SHEET

MONOTUBE SUPPORT MOUNTING

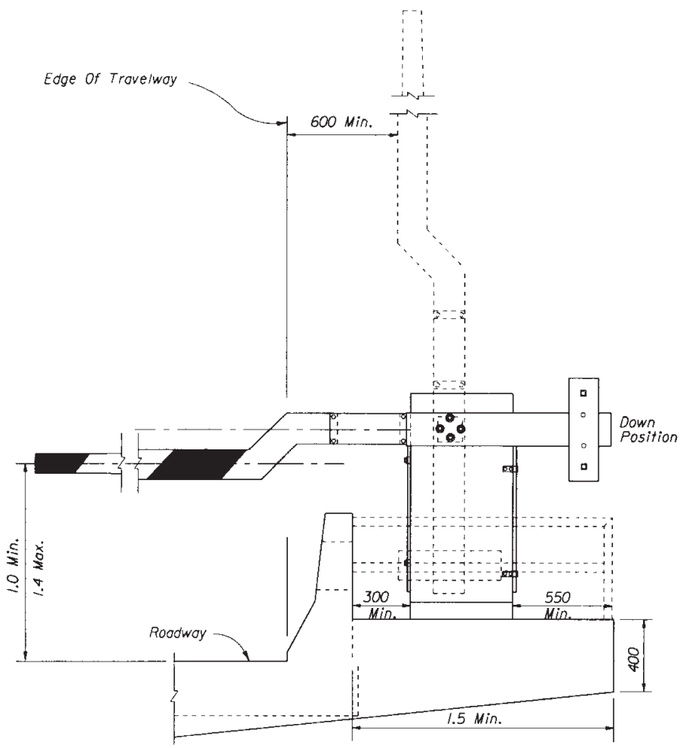

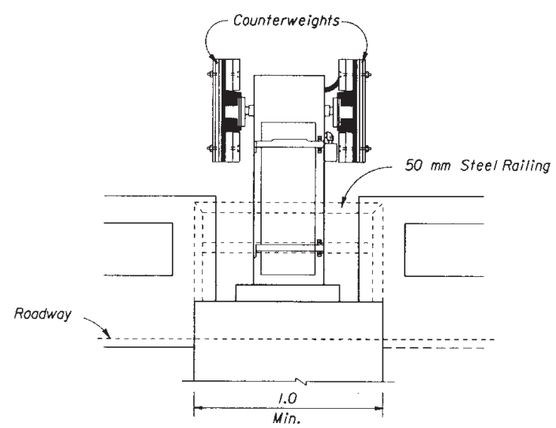

GATE & ARM DETAIL

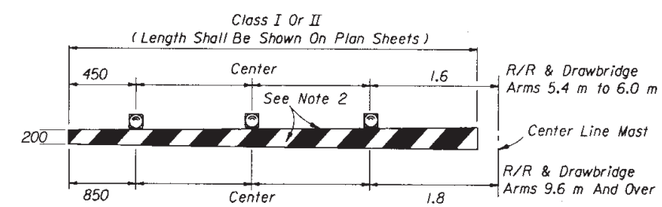

Note :
1. 12 volt flashing red lights shall be mounted on gate arm and shall operate in the flashing mode only when gate arm is in the lower position or in the process of being lowered. The number of lights shall vary accordingly to length of the gate arm.
2. 400 mm alternate diagonal fully reflectorized red and white stripes.

TYPICAL LAMP PLACEMENT

STATE OF FLORIDA DEPARTMENT OF TRANSPORTATION
TRAFFIC DESIGN

TRAFFIC CONTROL DEVICES FOR MOVABLE SPAN BRIDGE SIGNALS

	Names	Dates	Approved By Charles A Scott
Designed By			
Drawn By			
Checked By			Revision No. 94 / Sheet No. 3 of 3 / Index No. 17890
F.H.W.A. Approved:			