Index D20450 Series Florida Slab Beams

Design Criteria

AASHTO LRFD Bridge Design Specifications; ***Structures Design Guidelines (SDG)***; ***Structures Detailing Manual (SDM)***

Design Assumptions and Limitations

The use of the Florida Slab Beam Superstructure System and these Developmental Design Standards will typically be restricted by the SDO to off-system bridges with a low Average Daily Traffic (ADT) and Average Daily Truck Traffic (ADTT).

When using these Developmental Design Standards, the designer must request the following Developmental Specifications from the District Specifications Office for inclusion in the Contract Documents:

- ***Developmental Specification*** Dev346SRA which includes provisions for shrinkage reducing admixture for the C.I.P. Topping
- ***Developmental Specification*** Dev450FSB which includes provisions for the FSBs
- ***Developmental Specification*** Dev924SRA which includes provisions for shrinkage reducing admixture for the C.I.P. Topping

Index D20450 is the lead standard for the 12", 15" and 18" Florida Slab Beams (FSBs) ***Developmental Design Standards*** Indexes D20451, D20452 and D20453, respectively. FSBs are the basis for the Florida Slab Beam Superstructure System.

FSBs are designed to act as simple spans under both Dead Load and Live Load.

The abbreviated FSB designation for depth and width is FSB "depth" x "width", e.g. FSB 12 x 48.

FSBs must be of the same depth within a given span. FSBs of different depths may be used in different spans of the same bridge.

FSBs vary in width from 4'-0" to 5'-0" in 1 inch increments. For a given bridge or multiple similar bridges on a given project, FSBs should be of the widest constant width possible except where geometric constraints preclude this, e.g. locations of phase construction joints or significant changes in cross slope.

Commentary: The use of constant width FSBs is recommended when possible for economy of fabrication. The use of the widest width FSBs possible is recommended for efficiency of the pretensioned beam design.

The FSB standards are applicable for spans with skewed end conditions less than or equal to 30 degrees. For spans with skewed end conditions greater than 30 degrees, develop custom FSB designs and details using the Standards as a basis. The skew may be different at the two ends of a given span.

FSBs must be used with a cast-in-place (C.I.P.) reinforced concrete topping that extends across the full length and width of the span and integral pockets between each adjacent FSB. The concrete for the C.I.P. topping must include a shrinkage reducing admixture per ***Developmental Specifications*** Dev346SRA and Dev924SRA. For design purposes, the C.I.P. topping must be a minimum of 6" thick for Short Bridges and a minimum of 6½" thick for Long Bridges (prior to planing). See ***SDG*** 4.2 for the definitions of Short and Long Bridges. A single mat of reinforcing steel consisting of longitudinal #5 bars at 9" centers and transverse #5 bars at 6" centers is required within the C.I.P. topping. An additional mat of reinforcing steel is required if the C.I.P. topping thickness is greater than 10". Closed #5 bar stirrups with longitudinal #5 bars are required within the pockets at locations matching all Bars 5E extending from the sides of the FSBs. The C.I.P. topping and pockets are considered to act composite with the FSBs under Live Load and Composite Dead Loads.

Commentary: The minimum topping thicknesses of 6" for Short Bridges and 6½" for Long Bridges are to be used for design purposes. These topping thicknesses already include the ½" tolerance for beam camber variability that is shown on ***Design Standards*** *Indexes 20199 and 20299. As-constructed topping thicknesses of 5½" for Short Bridges and 6" for Long Bridges (prior to planing) with their associated minimum covers to the top layer of reinforcing are acceptable.*

An expansion joint is required at each end of each FSB span. ***Design Standards*** Index 21110 Poured Joint with Backer Rod Expansion Joint System is required to seal the expansion joints between adjacent FSB spans. Either ***Design Standards*** Index 21110, an armored elastomeric strip seal, a modular joint or a finger joint may be used as necessary between an FSB span and an adjacent span with a different superstructure type. See the Plan Content Requirements section below for details.

A pile or drilled shaft supported end bent, a grade beam or a spread footing is required at begin and end bridge. Provide a backwall on the grade beam or spread footing at begin or end bridge if a GRS abutment without an approach slab is used.

FSBs may be used for bridges with tangent vertical profiles and/or vertically curved profiles. FSBs may be used for bridges on tangent alignments, and for bridges on horizontally curved alignments by chording the FSBs and curving the traffic/pedestrian railings and raised sidewalks (if present).

FSBs are typically placed parallel to the cross slope of the bridge except within the limits of superelevation transition and/or on bridges with horizontally curved alignments. Avoid using FSBs within the limits of superelevation transitions if possible. A slight superelevation transition may be accommodated by varying the C.I.P. topping thickness along the length and across the width of the span. A significant superelevation transition must be accommodated by varying the grade at which adjacent FSBs are placed in combination with varying the C.I.P. topping thickness along the length and across the width of each individual FSB, i.e. the way superelevation transition is accommodated on I-girder superstructures.

Provide a substructure transverse keeper block on the low side of the superstructure for the following two conditions:

1. If the superstructure cross slope is greater than or equal to 3% and the cross section is not crowned.
2. If the cross section is crowned, the superstructure is constructed in phases and the cross slope of the first phase is greater than or equal to 3%.

Provide substructure transverse keeper blocks on both sides of the superstructure if there are significant transverse forces acting on the superstructure that must be resisted, e.g. forces from wave action or water flow.

Otherwise, do not use substructure transverse keeper blocks.

To minimize horizontal splitting forces, limit the maximum bonded prestress force at the FSB ends from fully bonded strands to the following:

Index No.	FSB Depth	Maximum Bonded Prestress Force
D20451	12"	1240 kips
D20452	15"	1460 kips
D20453	18"	1460 kips

Do not apply losses when calculating the bonded prestress force. Do not modify the reinforcing in the ends of FSBs without the approval of the State Structures Design Engineer.

Permanent traffic and pedestrian railings shown in the ***Design Standards*** may be used as-is when their vertical reinforcing steel is required to be embedded 6" into the supporting deck (the C.I.P. topping for FSBs). Permanent traffic and pedestrian railings shown in the ***Design Standards*** with vertical reinforcing steel that is required to be embedded more than a 6" into the supporting deck, e.g. ***Design Standards*** Index 425, may be used if project specific reinforcement details are provided in the plans. Permanent traffic and pedestrian railings shown in the ***Design Standards*** that utilize post-installed anchors may be used only with adhesive bonded anchor bolts. ***Design Standards*** Index 414 Temporary Concrete Barriers may be used freestanding with keeper pins or may be bolted down using adhesive bonded anchor bolts only. Provide a raised sidewalk that is integrally reinforced with the C.I.P. topping in conjunction with ***Design Standards*** Indexes 422 and 423.

The use of scuppers or deck drains that pass through the FSBs is prohibited. Project specific designs and details are required for other types of scuppers or deck drains if they are used.

The use of drip grooves adjacent to copings as called for in ***SDG*** 4.2.12 is neither required nor warranted.

Plan Content Requirements

The FSB ***Developmental Design Standards*** must be supplemented with project specific information in the plans. The FSB ***Developmental Design Standards***, along with the supplemental project specific information that is included in the plans, provide sufficient information to permit FSB fabrication without the submittal of shop drawings.

Establish overall span lengths as shown in Figure 1 for single and multiple span straight bridges on constant or slightly varying grades that are not skewed or that have the same skew at each span end. For all other bridges, establish overall span lengths so as to make beam casting lengths, superstructure detailing and reinforcing bar lists as consistent as possible between individual spans.

Figure 1 Span Length Schematic Plan

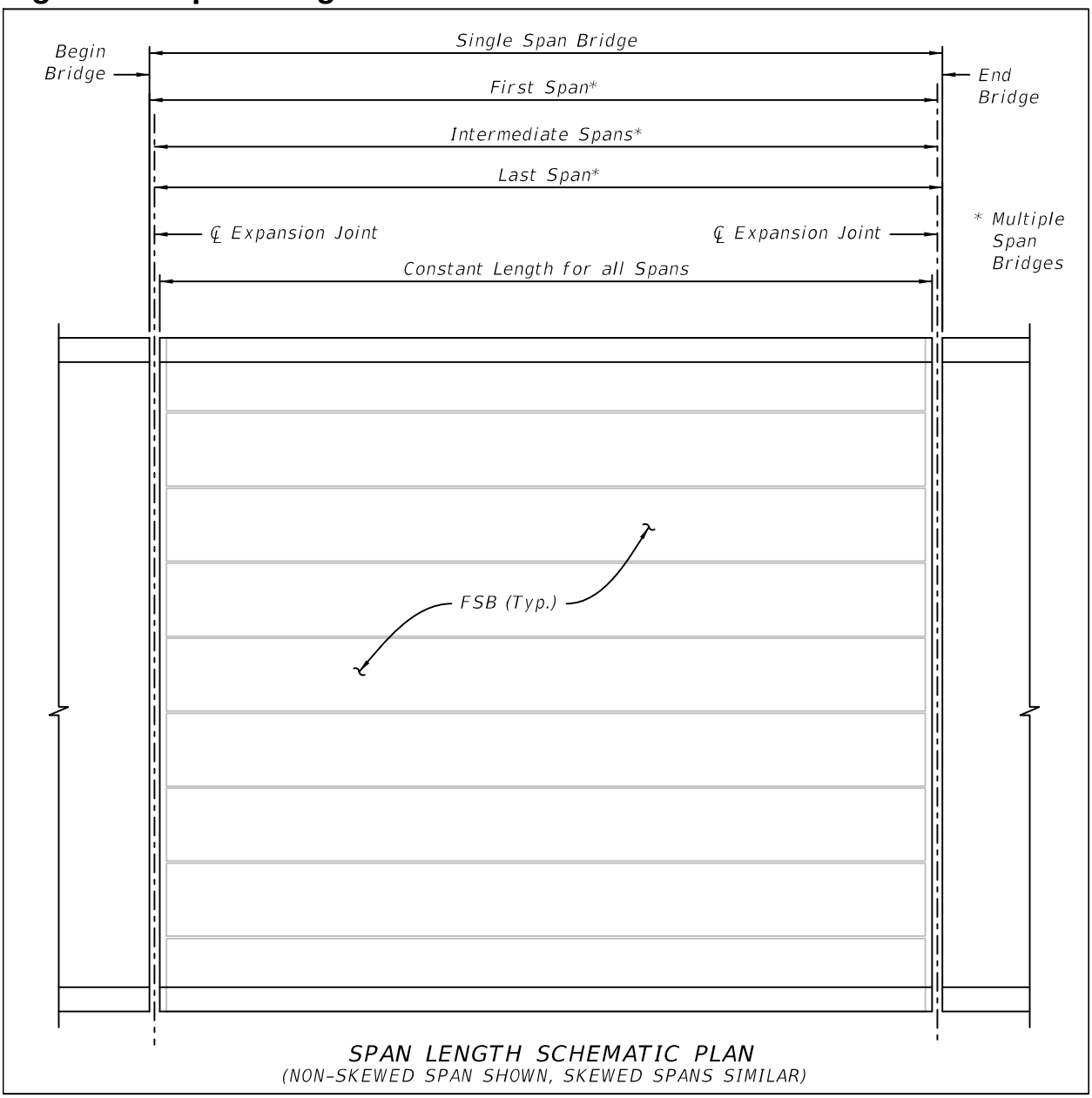

Establish bearing locations as shown in Figure 2. Use an open joint width of 2" in conjunction with ***Design Standards*** Index 21110 Poured Joint With Backer Rod Expansion Joint System unless a larger expansion joint is necessary.

Figure 2 Bearing Location Schematic Plan

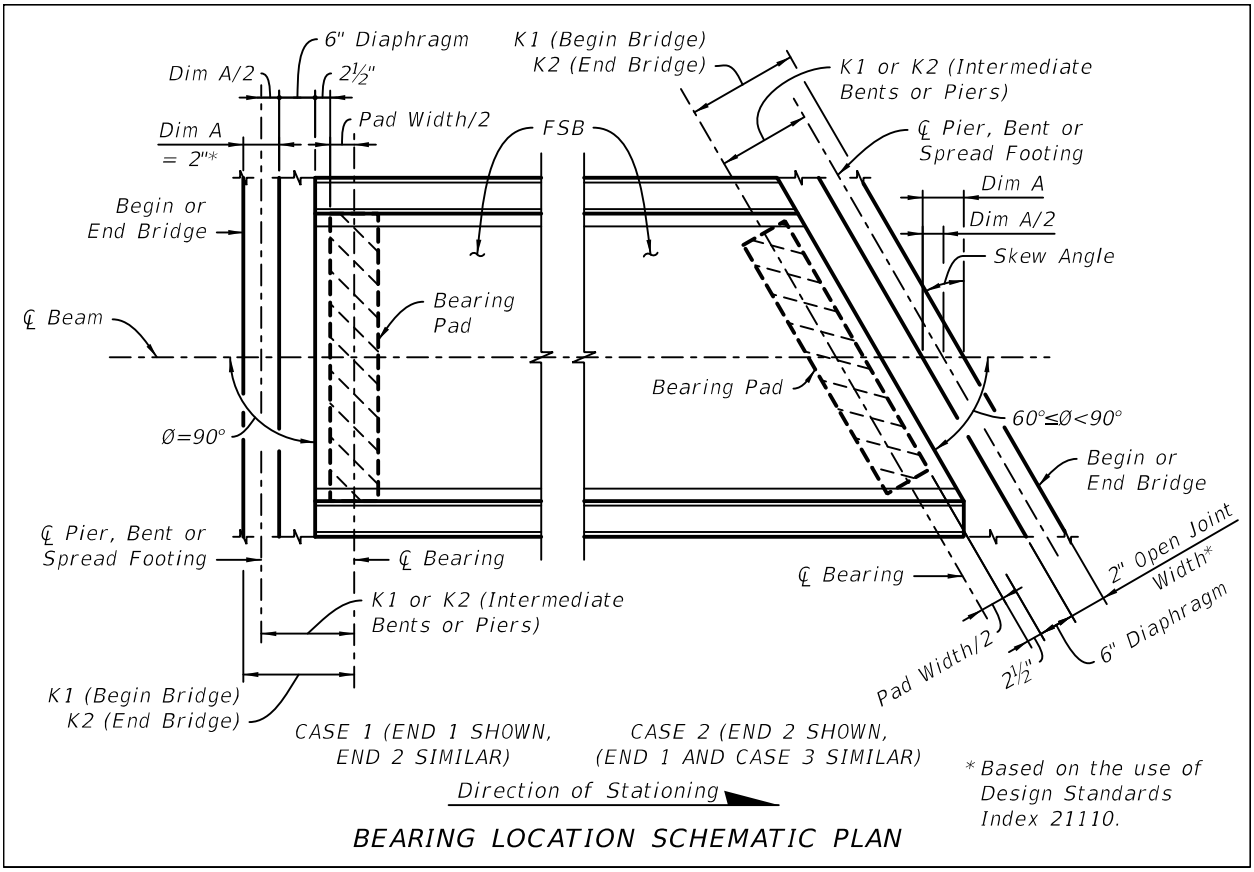

Use the following equation and Figure 3 to determine the width and number of FSBs, and the width of the gaps between them, for a given bridge width:

$$\mathbf{W_G} = \frac{[(\mathbf{W_C} + \mathbf{1}") \times \sqrt{\mathbf{1} + \mathbf{Cross\ Slope^2}}] - (\mathbf{N_{FSB}} \times \mathbf{W_{FSB}})}{(\mathbf{N_{FSB}} - \mathbf{1})}$$

W_G = Uniform width of gaps between FSBs measured along the cross slope at the bottom of the FSBs (¾" ≤ W_G ≤ 1½" preferred, 1¾" maximum) [inches]

W_C = Horizontal dimension between coping lines measured perpendicular to the stationing line; or for horizontally curved spans, measured perpendicular to a line tangent to the stationing line at the centerline of the span [inches]

Cross Slope = Average percent cross slope; averaged along the length of the span [ft/ft]

N_{FSB} = Total number of FSBs used for a given bridge width

W_{FSB} = Width of a single typical FSB; 4'-0" ≤ W_{FSB} ≤ 5'-0", in 1" increments [inches]

Modify the above equation as required to determine the width and number of FSBs, and the width of the gaps between them, for the following bridges:

- Bridges with different width FSBs in a given span
- Bridges with different cross slopes across their widths, i.e. crowned cross sections

Figure 3 Section Thru FSB Superstructure

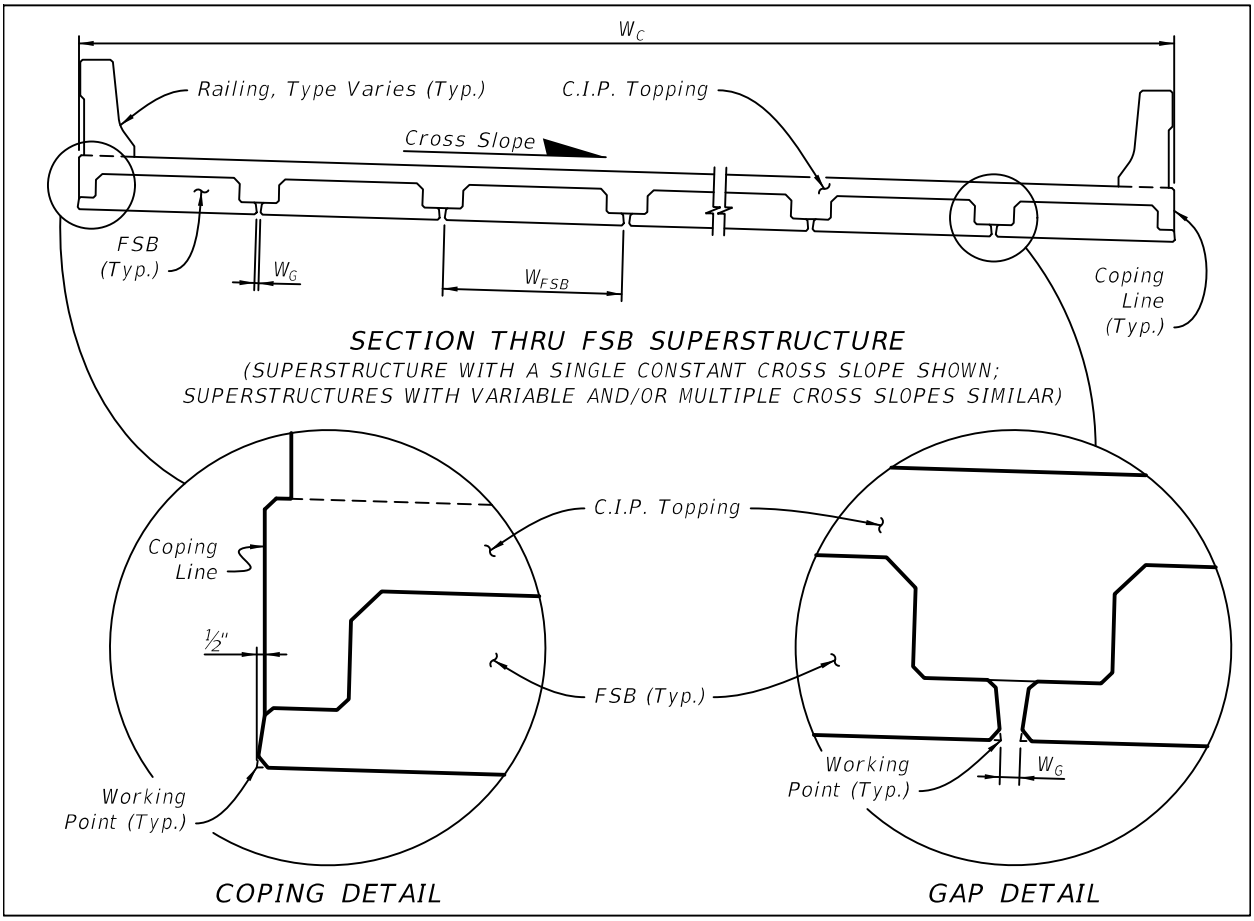

Crowned cross sections and other cross sections with cross slope breaks may be treated using either of the details shown in Figure 4.

Figure 4 Cross Slope Break Point Options

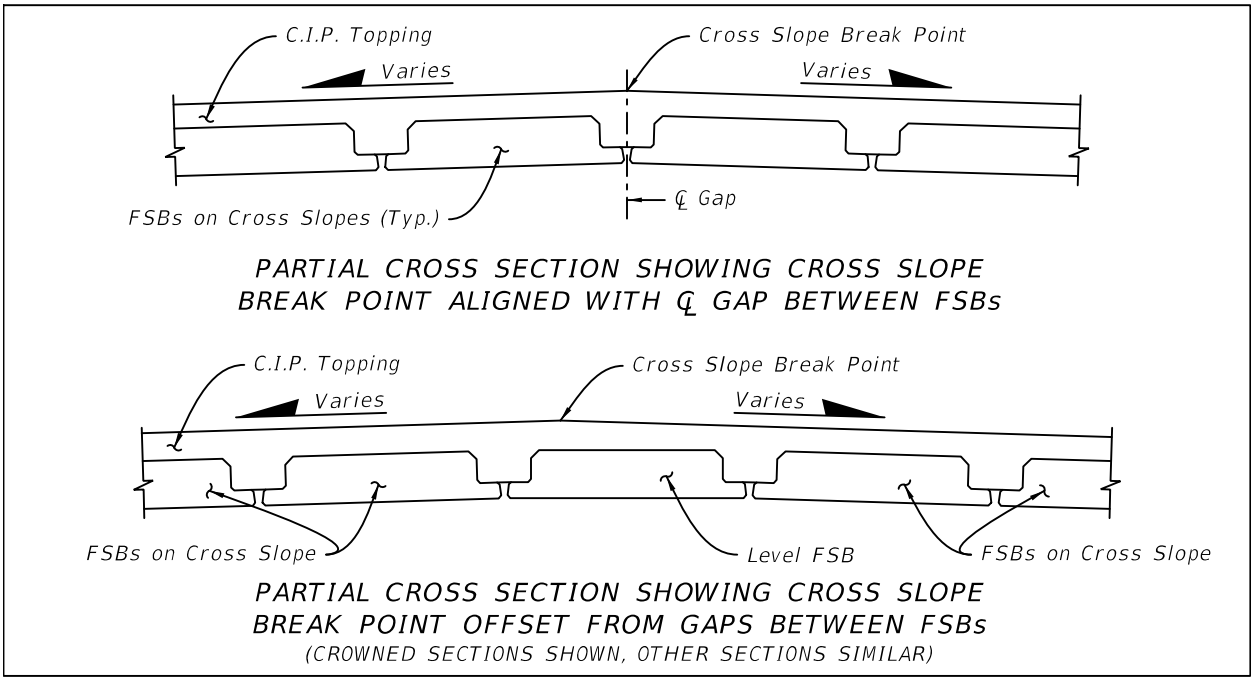

For a given depth FSB, camber and dead load deflection will vary predominately due to span length and FSB width. Dim B and Dim D as shown in Figure 5 may also vary from span to span along the length of a bridge due to deck geometry. To provide for improved aesthetics and potentially easier detailing of the supporting pedestals, where possible adjust the values of Dim B and Dim D over equal height FSBs in adjacent spans so as to allow the bottoms of the FSBs to align vertically. Dim B and Dim D do not necessarily have to be the same value for a single span. See also the quantity calculation equations and Figures 19 and 20.

Figure 5 Topping Thickness and Pedestal Elevation Schematic

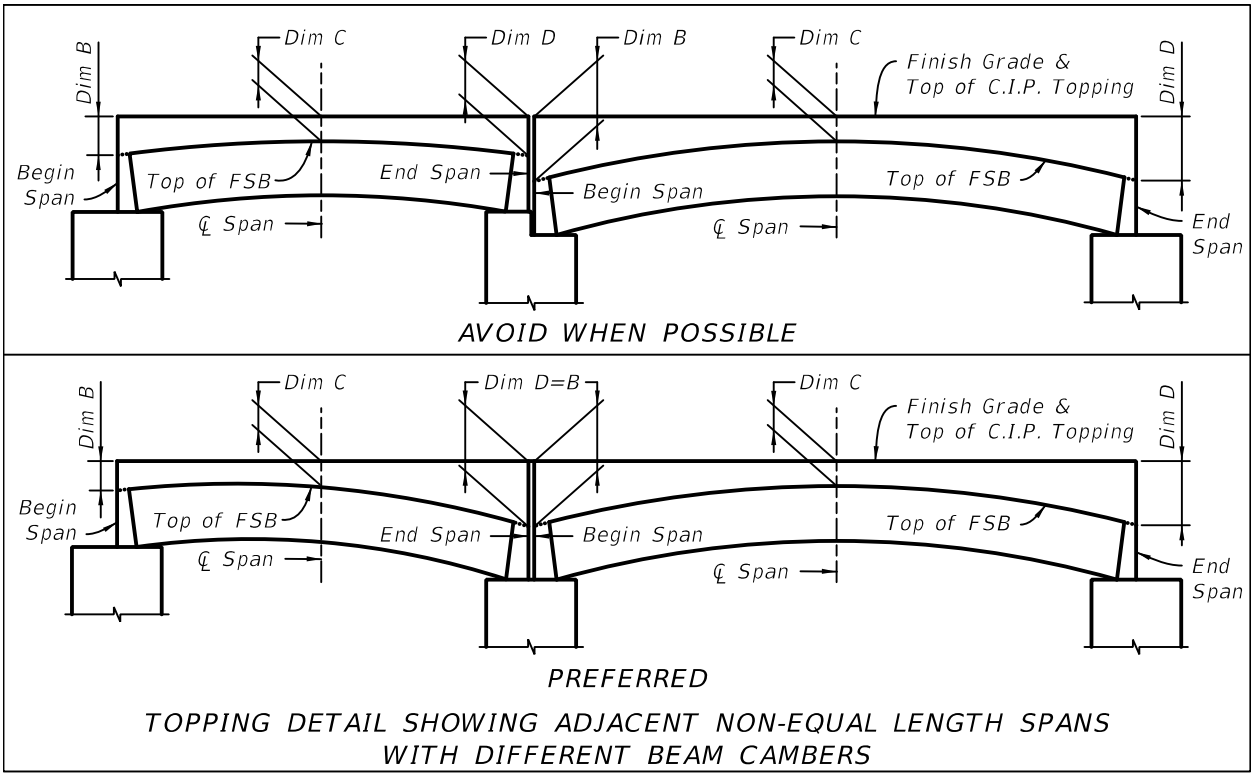

In the Structures Plans:

Indicate the use of shrinkage reducing admixture for the C.I.P. topping concrete in the Materials Note on the General Notes Sheet.

Include the following note on the General Notes sheet:

> C.I.P. TOPPING: Thoroughly saturate the top surface of the FSBs with water in accordance with Specification 400 for 12 hours immediately prior to placing the C.I.P. topping. Remove standing water prior to placing the C.I.P. topping. Cure the C.I.P. topping in accordance with the Specification 400 requirements for bridge decks.

Prepare a Superstructure Plan View and Section Through Superstructure in accordance with ***Structures Detailing Manual*** Chapter 15 and include them in the plans. Label both the coping to coping dimension and the out-to-out dimension as shown in the ***Detailing Manual Example***. Include cross references to traffic and pedestrian railings and dimensions, reinforcing bar callouts and spacings for raised sidewalks (if present). On the Superstructure Plan View, include language similar to the following in the dimensioning for both the longitudinal and transverse #5 reinforcing bars in the C.I.P. topping:

> Shift as required to clear Bars [insert actual bar mark for #5 closed stirrups here] and FSB Bars 4K.

For skewed spans, show the transverse reinforcing bars to be placed parallel to the skew if the skew is less than or equal to 15 degrees. If the skews are different and/or in opposite directions at opposite ends of a span, the transverse reinforcing bars may be

fanned with the maximum spacing not to exceed 6", or may be placed perpendicular to the centerline of the span. If the skew at either end of a span is greater than 15 degrees, show the transverse reinforcing bars to be placed perpendicular to the centerline of the span. When the transverse reinforcing bars are placed perpendicular to the centerline of the span, include three additional No. 5 bars that extend the full width of the bridge placed parallel to the skew at 6 inch spacings adjacent to each end of the span.

Include the following details on the Superstructure or Superstructure Details Sheet(s):

- Detail at Begin/End Bridge as shown in Figure 6 if a spread footing or a pile or drilled shaft supported end bent is used. Complete the detail by deleting either the "End Bent Cap" callout or the "Spread Footing" callout as appropriate and by replacing variables K1 and K2 with project specific dimensions.

Figure 6 Detail at Begin/End Bridge with End Bent or Spread Footing

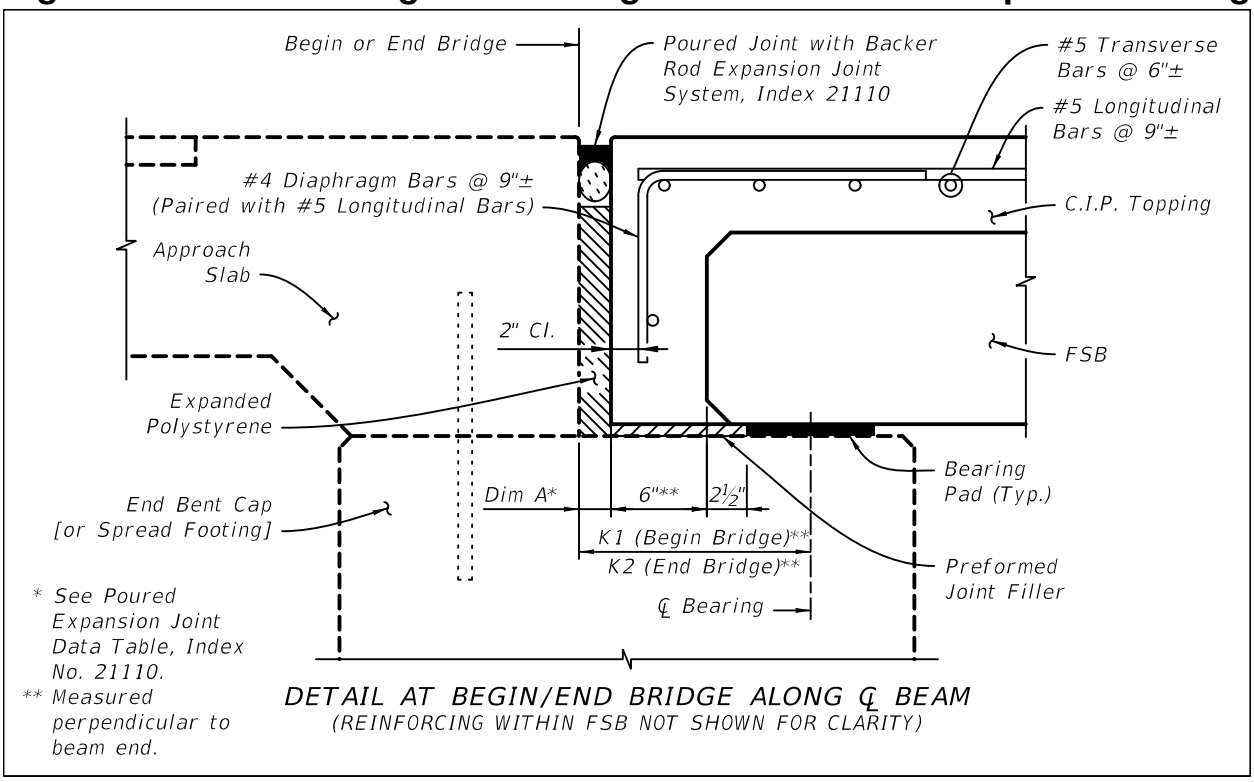

- Detail at Begin/End Bridge as shown in Figure 7 if a GRS abutment is used. Complete the detail by replacing variables K1 and K2 with project specific dimensions.

Figure 7 Detail at Begin/End Bridge with a Spread Footing and GRS Abutment

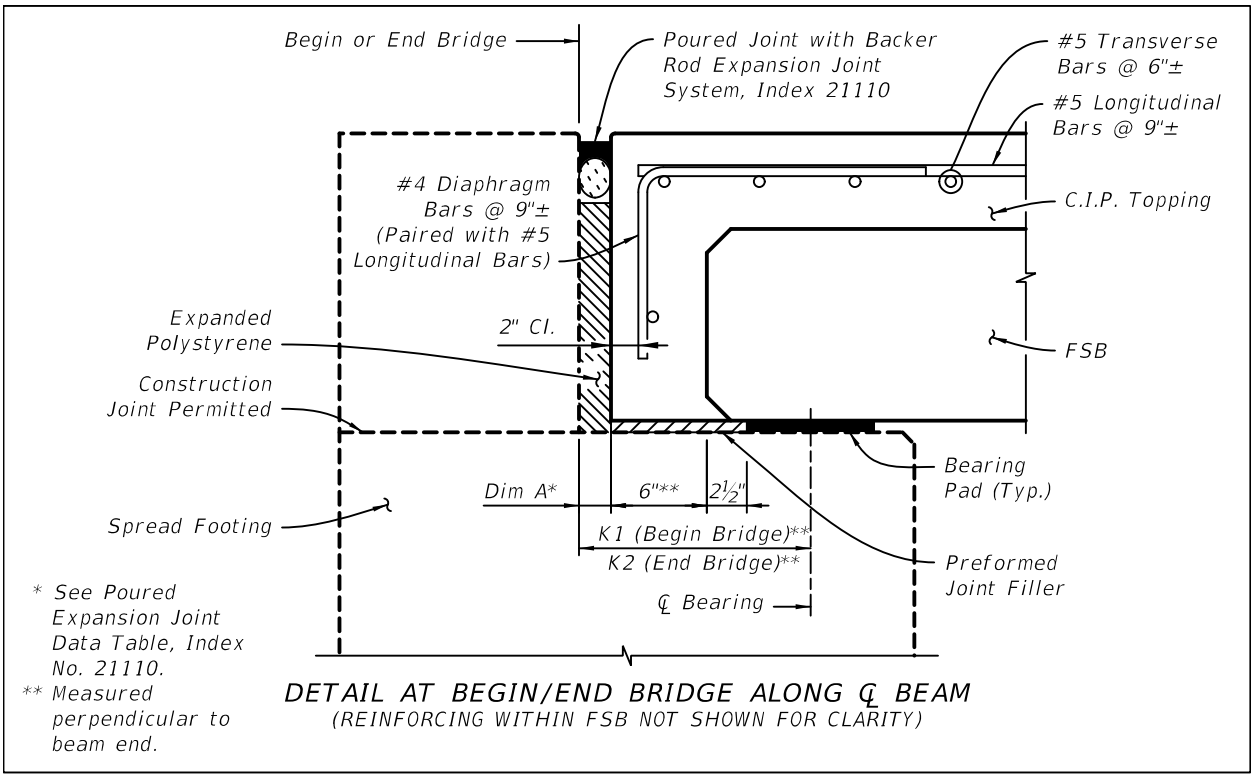

- Detail at Intermediate Bents/Piers as shown in Figure 8 if a pile or drilled shaft supported intermediate bent is used. Complete the detail by deleting either the "Intermediate Bent Cap" callout or the "Pier Cap" callout as appropriate and by replacing variables K1 and K2 with project specific dimensions.

Figure 8 Detail at Intermediate Bents/Piers

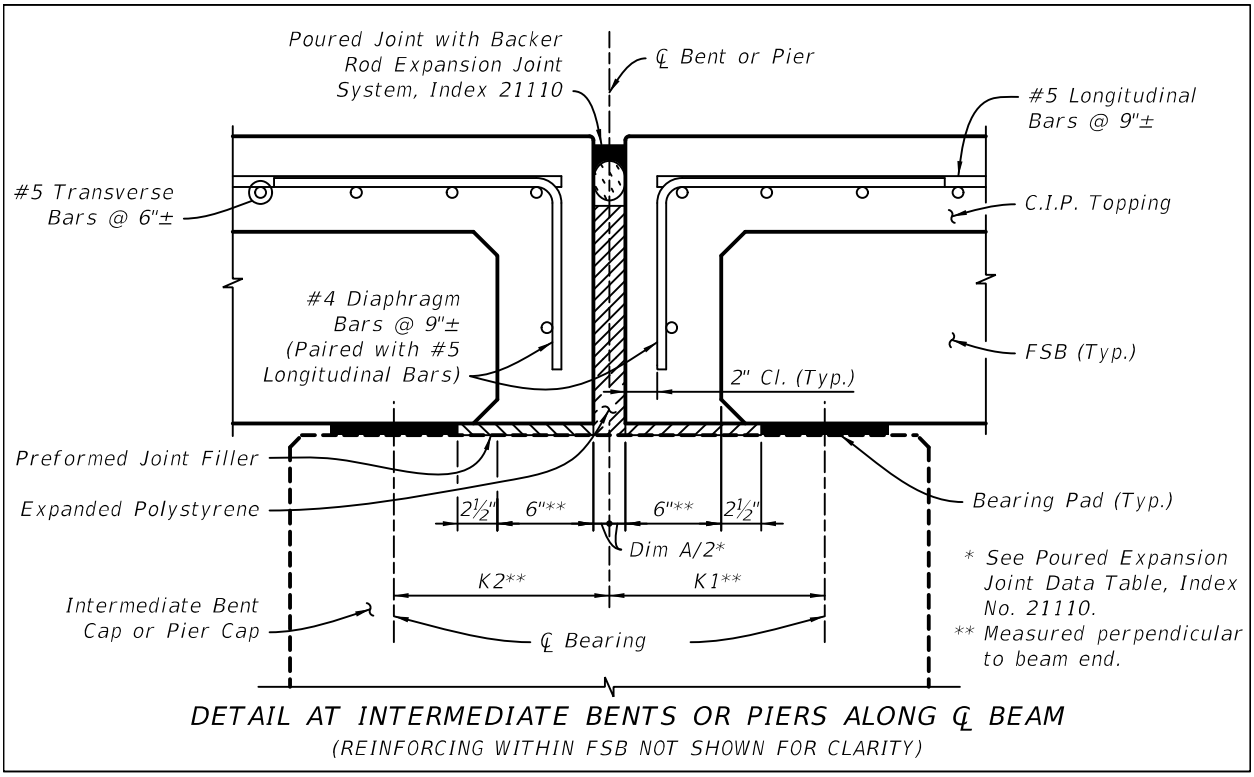

- Detail at Pockets, Backer Rod Detail and Notes, and the Section along Centerline Pocket at Span Ends as shown in Figure 9. Complete the Section along Centerline Pocket at Span Ends by deleting either the "End Bent Cap", "Pier Cap" or "Spread Footing" callouts as appropriate.

Figure 9 Detail at Pockets, Backer Rod Detail and Notes, and Section along Centerline Pocket at Span Ends

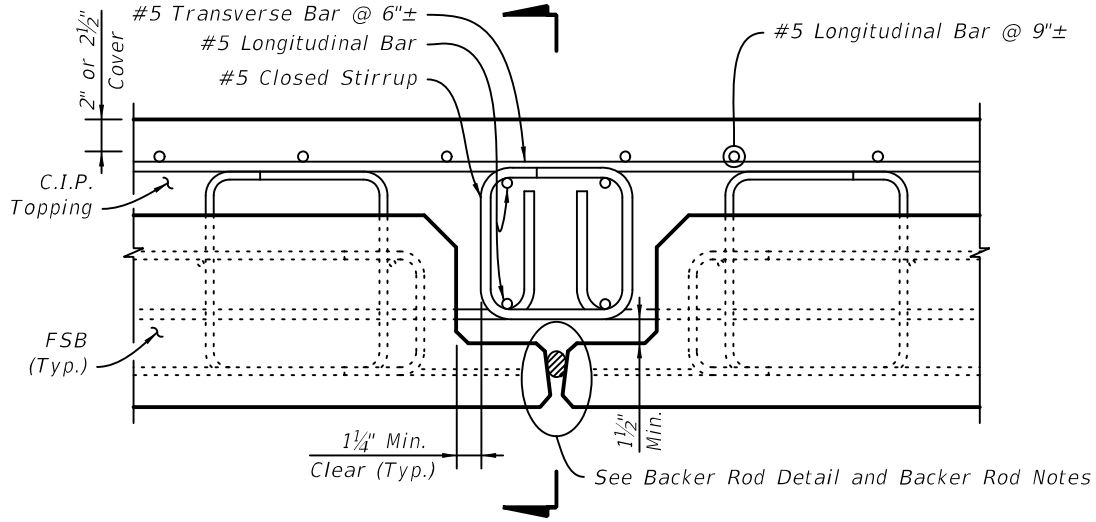

DETAIL AT POCKETS

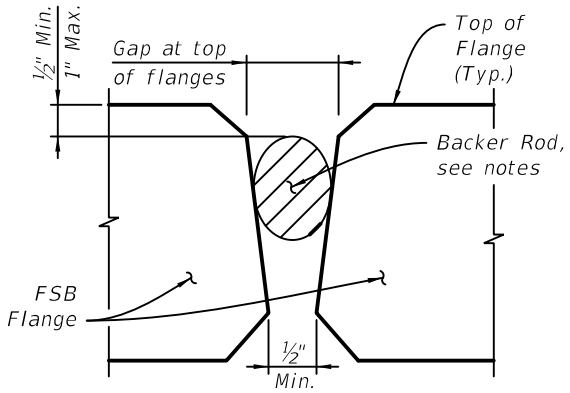

BACKER ROD DETAIL

BACKER ROD NOTES:

1. Use a Backer Rod to form the bottom of the cast in place topping at the gap between adjacent FSBs. Use a Backer Rod meeting the requirements of ASTM C1330 or ASTM D5249, Types 1 or 3, with a minimum uncompressed diameter 50% larger than the field verified maximum width of the gap between adjacent FSBs. Measure gap at the top of the flanges as shown in the Backer Rod Detail.
2. Install the Backer Rod from the top down to the position shown in the Backer Rod Detail.
3. Secure the Backer Rod to prevent displacement during topping concrete placement and to be mortar tight using a compatible construction adhesive.
4. The Backer Rod may remain in place after topping concrete placement.

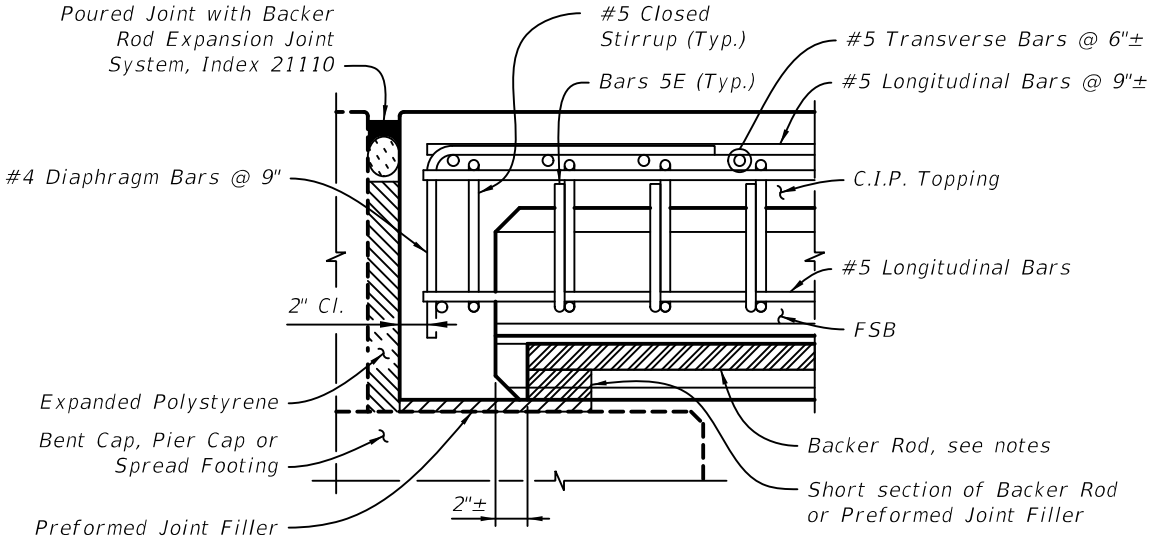

SECTION ALONG ℄ POCKET AT SPAN ENDS

(SECTION AT BEGIN/END BRIDGE SHOWN; SECTION AT INTERMEDIATE BENTS OR PIERS SIMILAR)

- Detail at Copings as shown in Figure 10. Complete or revise the detail by adding the appropriate traffic and/or pedestrian railing, raised sidewalk (if present), and their associated reinforcing bars. For in-board mounted traffic railings, provide a similar detail showing the traffic railing reinforcement embedded into the C.I.P. topping. Do not show a drip groove adjacent to the coping.

Figure 10 Detail at Copings

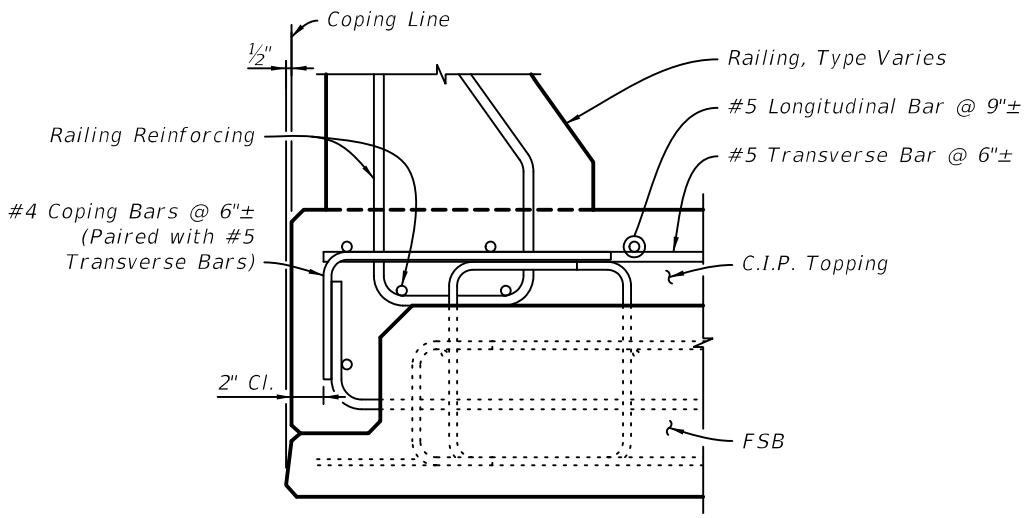

DETAIL AT COPINGS

The above listed details are drawn showing 12" FSBs. If 15" or 18" FSBs are used, modify the details to show the appropriate FSB depth.

Complete all of the above listed details by completing the callouts for the closed stirrups and the transverse, longitudinal, coping and diaphragm reinforcing bars to show project specific bar designations. Use the sizes of these reinforcing bars as indicated and include them in the Reinforcing Bar List. Do not repeat any of the bar designations used for the bars within the FSBs or railings. Generally, no other modifications or revisions to these details are required other than those already described.Complete the Camber and Deflection Data Table For Florida Slab Beams and include it and the associated Dead Load Deflection Diagram and Camber Note as shown in Figure 11 on the Superstructure or Superstructure Details sheet.

Figure 11 Dead Load Deflection Data Table, Diagram and Note

CAMBER NOTE:

The values given in the table are based on theoretical beam cambers. The Contractor shall monitor beam cambers for the purpose of predicting camber values at the time of the topping casting. If the predicted cambers based on field measurements differ more than ± ½" from the theoretical "Net Beam Camber @ 120 Days" shown in the table, propose modified dimensions as required and submit to the Engineer for approval a minimum of 21 days prior to casting topping concrete.

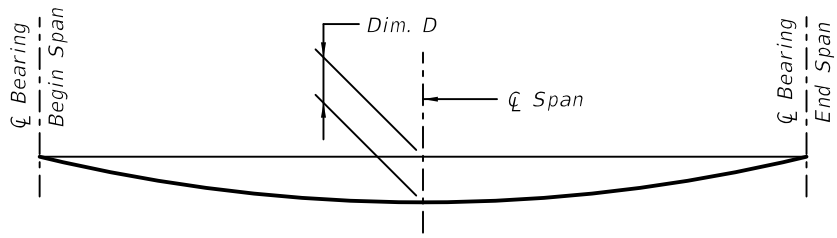

DEAD LOAD DEFLECTION DIAGRAM

CAMBER AND DEFLECTION DATA TABLE FOR FLORIDA SLAB BEAMS			Table Date 01-01-16
LOCATION		NET BEAM CAMBER (PRESTRESS - DEAD LOAD OF BEAM) @ 120 DAYS (in.)	DIM. D DEAD LOAD DEFLECTION DUE TO TOPPING CASTING @ 120 DAYS (in.)
SPAN NO.	BEAM NO.		

Complete the Bearing Pad Data Table as shown in Figure 12 and include it and the associated Bearing Pad Detail and note on the Superstructure or Superstructure Details sheet. Determine the pad width as follows:

$$W_{Pad} = W_{FSB} - 1'\text{-}0''$$

If a single pad width is used for a given bridge, omit the Bearing Pad Data Table and show the pad width on the Bearing Pad Detail Plan View.

Figure 12 Bearing Pad Data Table, Detail and Note

FSB BEARING PAD DATA TABLE			Table Date 01-01-16
SPAN NO.	BEAM NO.	BEARING PAD MARK	W_{pad} (in)

NOTE:
Provide Plain Neoprene Bearing Pads with a Shear Modulus G = 110 psi and in accordance with Specification 932.

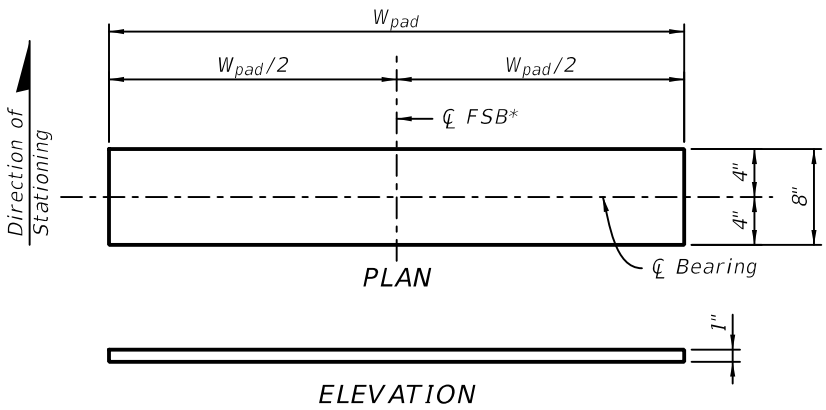

BEARING PAD DETAIL

*Ø = 90° Shown;
60° ≤ Ø < 90° Similar

If the ends of FSBs are skewed, complete and revise the detail shown in Figure 13 by showing the actual skew angle and its direction, the actual railing used with its associated reinforcing steel, and include the figure on the Superstructure Detail sheet(s). If an in-board mounted traffic railing is used in conjunction with a pedestrian railing located at the coping line, provide separate details for both railings.

Figure 13 Railing Detail at Skewed Expansion Joints

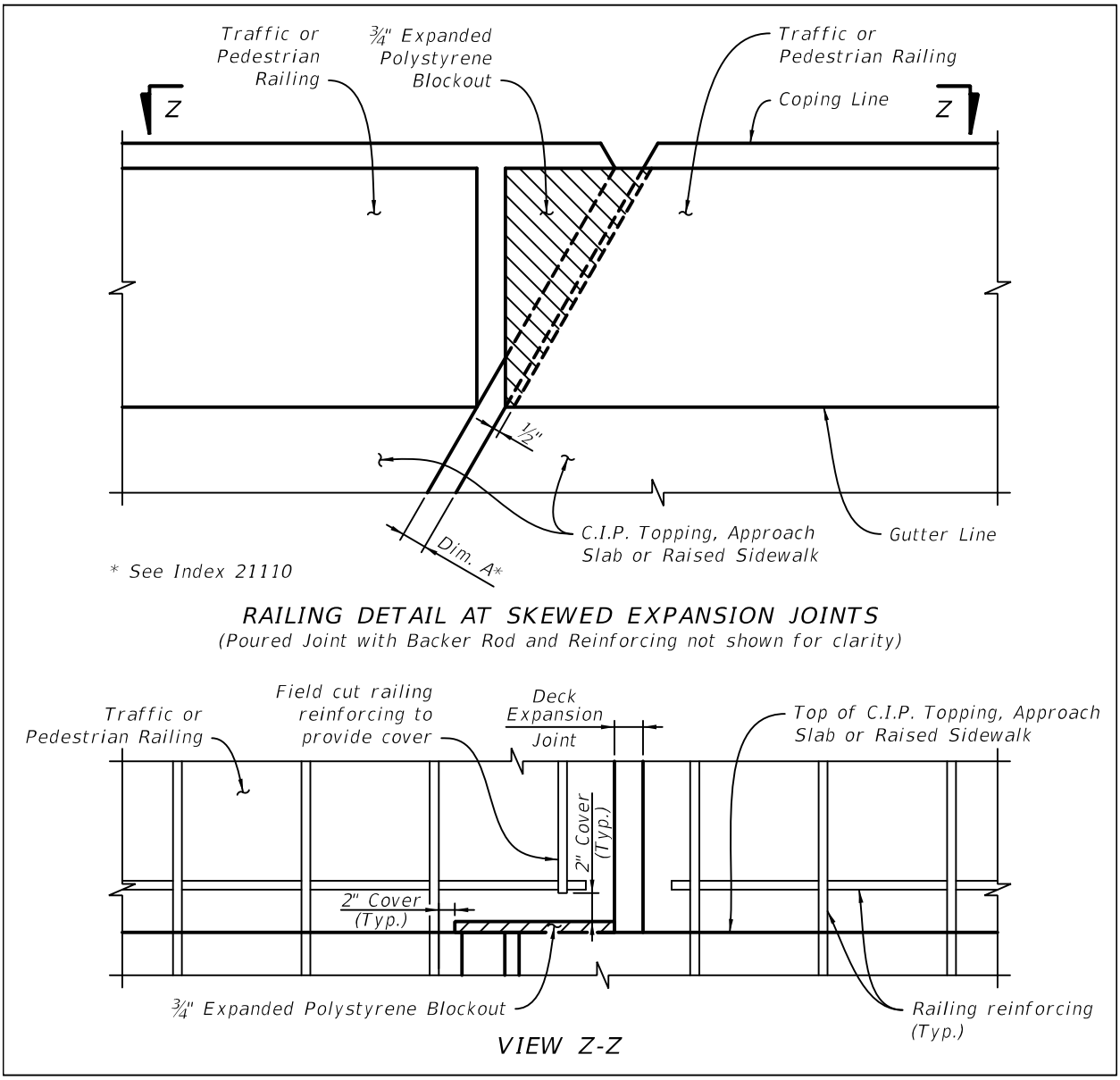

Details shown in Figures 6 through 13 are available in the CADD cell CEL- D20450B at the following location:

http://www.fdot.gov/roadway/DS/Dev.shtm

Complete the Poured Expansion Joint Data Table for ***Design Standards*** Index 21110 for all joints located between adjacent FSB spans and between an FSB end span and adjacent Approach Slab or backwall. Include the completed data table on the Superstructure or Superstructure Details sheet. Use an open joint width of 2" (Dim. "A" = 2" for non-skewed joints; Dim. "A" = 2"/sin Ø for skewed joints) and Dimension "A" Adjustment per 10º F = 0". Include details for other expansion joint types as required.

Commentary: 2" wide expansion joints are more than sufficient to accommodate thermal movement and construction tolerances between adjacent FSB spans. Because of the magnitude of thermal movement that must be accommodated and the reserve capacity that Index 21110 provides, it is not necessary to adjust the width of the Index 21110 joint due to temperature at the time the C.I.P. topping is cast.

If FSBs are used on horizontally curved alignments, detail the Superstructure sheet(s) in accordance with the requirements of ***Structures Detailing Manual*** Chapter 15 and provide additional details and dimensions showing the curved alignments of the traffic/ pedestrian railings and raised sidewalks (if present) in relation to the chorded FSBs as shown in Figure 14.

Figure 14 Schematic of FSBs on Horizontally Curved Alignments

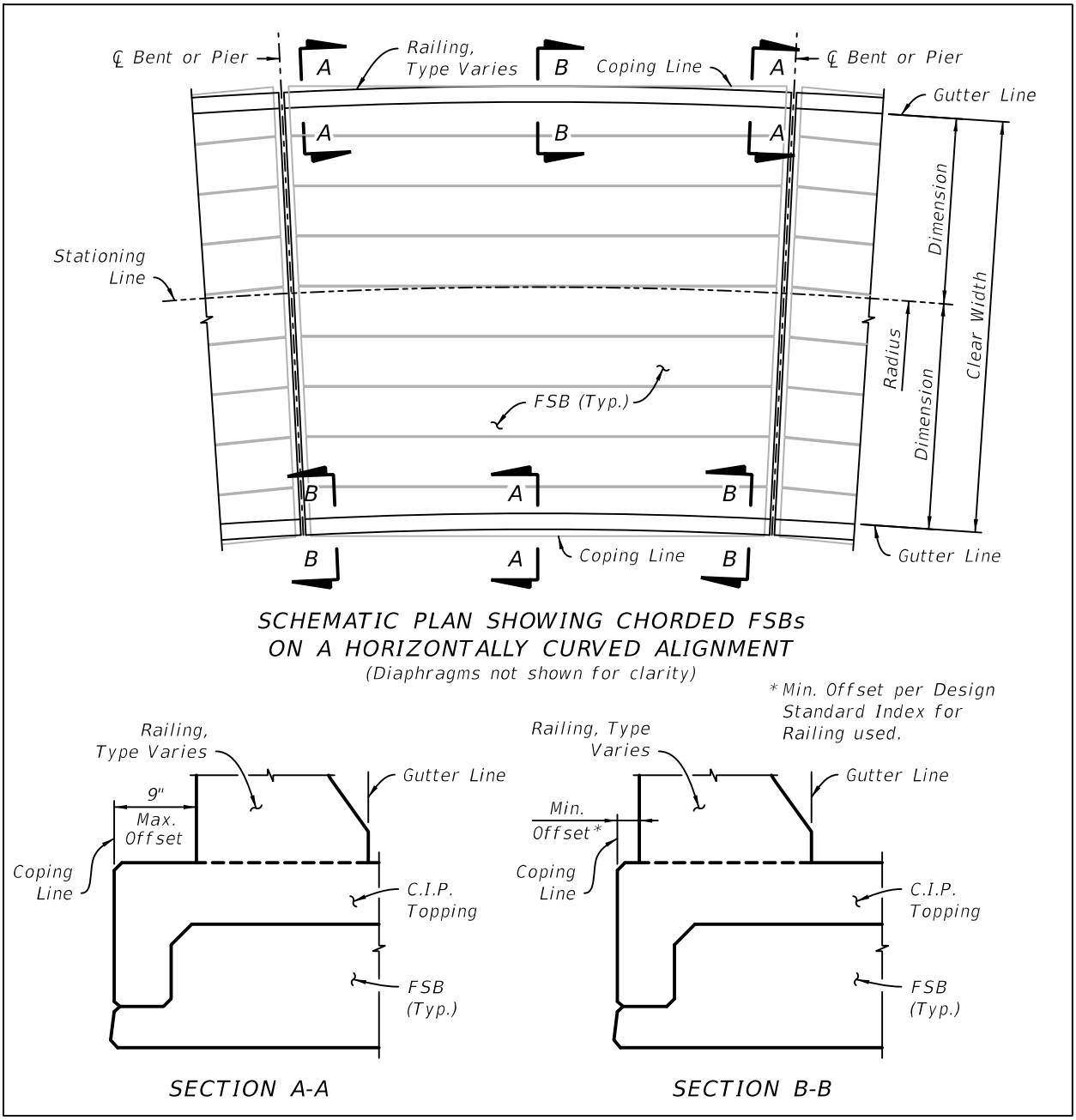

If scuppers or deck drains are required, provide project specific details in the plans.

When Keeper Blocks are required to limit potential transverse movement, provide project specific details for them in the substructure plans as shown in Figure 15.

Figure 15 Keeper Block Details

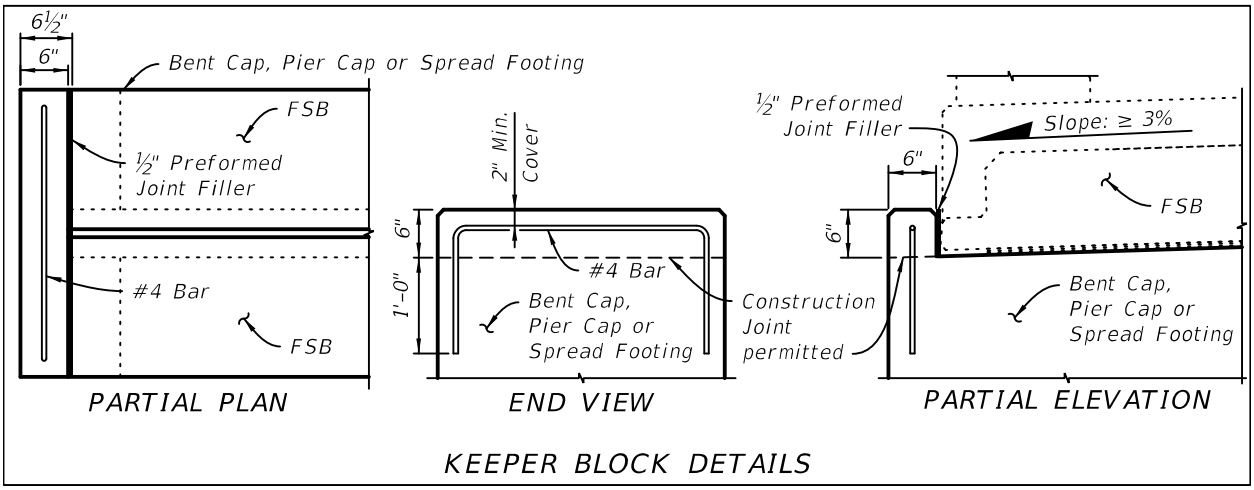

If the longitudinal grade of the finished bridge deck exceeds 3%, provide a project specific dowel design to limit the FSBs from sliding longitudinally. Design and detail the dowels and their embedment into the superstructure to allow for thermal movement of the superstructure.

Complete the "FLORIDA SLAB BEAM - TABLE OF VARIABLES" as shown in Figure 17 and include it in the plans. Use additional sheets when the actual number of FSBs or strand patterns exceeds the capacity of a single plan sheet using the standard table. Supplemental details and modifications to Standard Drawings and Tables are permitted if special conditions require changes to dimensions, details or notes. Include supplemental details and modifications with the plans. However, the "FLORIDA SLAB BEAM - TABLE OF VARIABLES" itself should not be modified when using Developmental Design Standards. See Introduction I.3 for more information regarding use of Data Tables.

Establish the required numbers and locations of Bars 3C, 4D3, 5E1, 5E2 and 4K using Index D20450, Partial Plan Views as follows:

1. To determine the required number of Bars 4D3 (confinement stirrups):
   a. Starting at End 1 and End 2, respectively, place five Bar 4D1 Pairs and five Bar 4D2 Pairs at the spacings shown;
   b. Place Bar 4D3 pairs in the distance remaining between the rightmost Bar 4D1 Pair (at End 1) and the leftmost 4D2 Pair (at End 2) at the spacings shown.
2. To determine the required number of Bars 5E1 or 5E2 (bottom transverse continuity reinforcement):
   a. Place a Bar 5E (5E1 or 5E2) at the centerline of the span;
   b. Starting at the centerline of the span, place Bars 5E (5E1 or 5E2) at 6" spacings along the length of the beam on both sides of the bar on the centerline of the span. Place the Bars 5E adjacent to the beam ends as shown

so as to clear the Bar 4D1 and 4D2 Pairs. NOTE: The 6" spacing is constant based on the locations of holes that are precut in the side forms. The last few Bars 5E at both ends of the beam may be field cut and rotated to provide for fit-up between the Bar 4D1 and 4D2 Pairs. The number of Bars 5E near the beam ends that must be field cut and rotated will vary depending on beam length and skew angles. This is addressed on the Indexes and no additional project specific details are required.

3. To determine the required number of Bar 4K Pairs (vertical and interface shear reinforcement):
   a. Place two Bar 4K Pairs adjacent to the second Bar 4D1 and 4D2 Pair at End 1 and End 2, respectively, as shown;
   b. Place two Bar 4K Pairs along the length of the beam using S1 spaces at V1 spacing and S2 spaces at V2 spacing per the beam design. Shift these Bar 4K Pairs longitudinally as required to clear Bar 4D Pairs and Bars 5E.
4. To determine the required number of Bars 3C (bottom flange transverse reinforcement):
   a. Place a Bar 3C beside the Bar 5E that is located at the centerline of the span;
   b. Starting at the centerline of the span, place a Bar 3C along the length of the beam on both sides of the bar on the centerline of the span at the spacings shown. Place the endmost Bars 3C at End 1 and End 2 so as to clear the last Bar 4D1 or 4D2 Pair, respectively. Shift these Bars 3C longitudinally as required to clear Bar 4D Pairs, Bar 4K Pairs and Bars 5E.

On the "FLORIDA SLAB BEAM - TABLE OF VARIABLES":

- Report elastic and time dependent shortening effects (DIM R) at the top of the FSB at 120 days. The average of the calculated values for the top and bottom of the FSB may be used.
- Round Angle Ø up to the nearest degree.
- For Bars 4D1 and 4D2, specify dimension D to the nearest ½".
- For Bars 3C and 4D3, include the number of bars (not pairs) required and specify dimensions C and D, respectively, to the nearest ½".
- For Bars 5E, include the number of bars required and specify dimension E to the nearest ½". Use Bars 5E1 for interior FSBs and Bars 5E2 for exterior FSBs.
- For Bars 6Y1 and 6Y2, specify dimension Y to the nearest ½".
- Specify Bar 4K Pairs spacings V1 and V2 to the nearest inch.
- Select the appropriate beam shape with its strand pattern from the collection included in CEL-D20450A and include it beneath the Table of Beam Variables. Include additional beam shapes/strand patterns as required.
  CEL-D20450A is available at the following location:

  http://www.fdot.gov/roadway/DS/Dev.shtm

- Identify the fully bonded and shielded strands in the strand pattern in accordance with the Strand Debonding Legend.
- Use fully bonded strands at the locations shown in Figure 16 to support Bars C, D, E and K.
- Distribute the remaining fully bonded strands and the shielded strands evenly and symmetrically across the full width of the strand template.

Figure 16 Fully Bonded Strand Locations

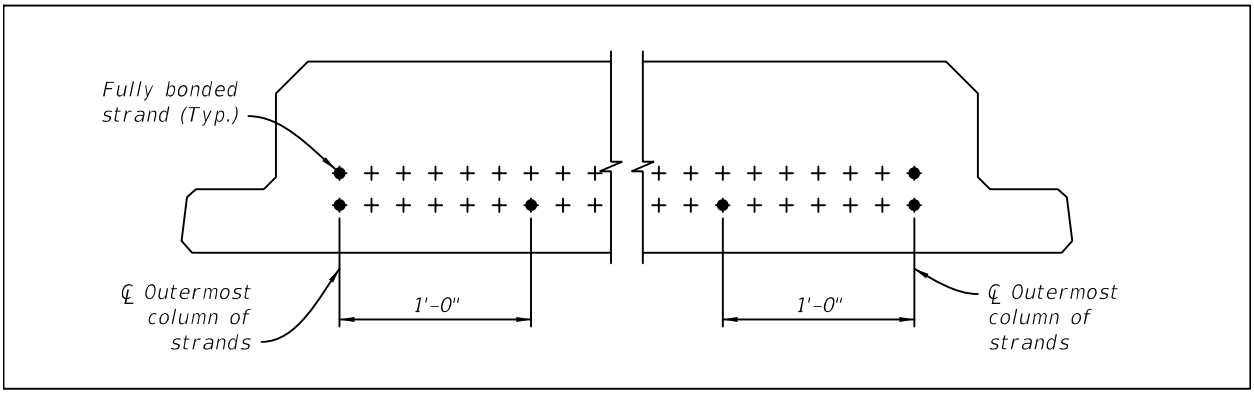

Figure 17 Florida Slab Beam - Table of Variables

FLORIDA SLAB BEAM - TABLE OF VARIABLES

Table Date 01-01-16

LOCATION		BEAM TYPE	CONCRETE PROPERTIES			STND. PTRN. TYPE	PLAN VIEW CASE		ANGLE Ø		BEAM DIMENSIONS*			REINFORCING STEEL																
				STRENGTHS (psi)										3C		4D1	4D2	4D3		5E1		5E2		6Y1	6Y2	4K	NO. OF BAR SPACES		BAR SPACING*	
SPAN NO.	BEAM NO.		CLASS	28 Day	Release		END 1	END 2	END 1	END 2	DIM W	DIM L	DIM R	NO.	DIM C	DIM D	DIM D	NO.	DIM D	NO.	DIM E	NO.	DIM E	DIM Y	DIM Y	NO.	S1	S2	V1	V2

NOTE: Work this sheet with Developmental Design Standard Indexes D20450 through D20453.

INSERT STRAND PATTERN HERE

TYPE 1 __ STRANDS

STRAND DESCRIPTION: Use ____ Diameter, Grade 270, Low Relaxation Carbon Steel Strands stressed at ___ kips each. Area per strand equals ___ sq. in.

STRAND PATTERNS

STRAND DEBONDING LEGEND

- • - fully bonded strands.
- ⊙ - strands debonded _'-__" from end of beam.
- ⊡ - strands debonded _'-__" from end of beam.
- △ - strands debonded _'-__" from end of beam.
- ◇ - strands debonded _'-__" from end of beam.

NOTE: On beams with skewed ends the debonded length shall be measured along the debonded strand.

DIMENSION NOTES

* All longitudinal beam dimensions shown on this sheet with a single asterisk (*) are measured along the top of beam at the centerline. Dimension "R" is calculated at mid-height of the beam.

Complete a Reinforcing Bar List using ***Design Standards*** Index 21300 that includes the transverse and longitudinal reinforcing bars and the closed stirrups, coping and diaphragm reinforcing bars as shown in Figure 18. Label the bar list "Superstructure C.I.P. Topping - Typical Span [or Span X]" and include it in the plans.

Figure 18 Superstructure Reinforcing Bar Details

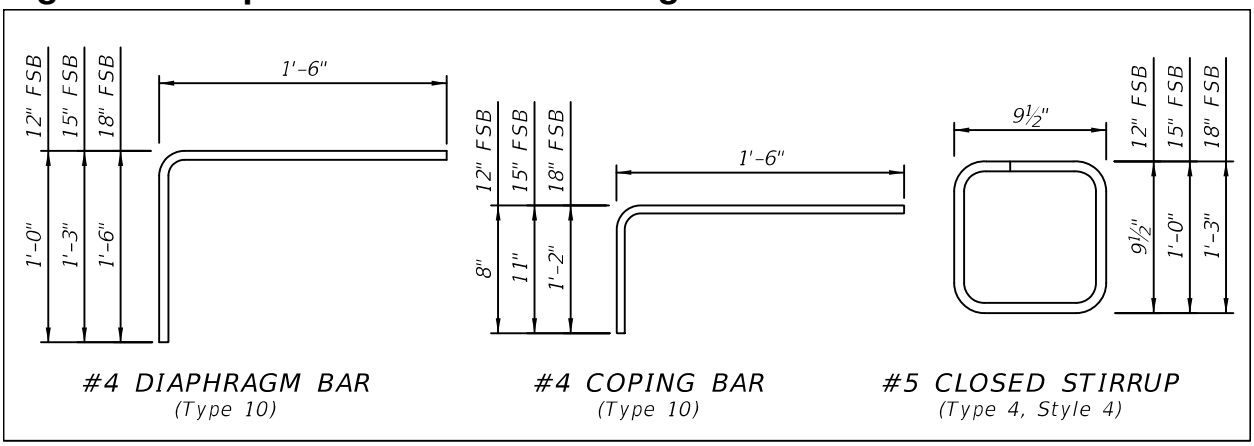

In the absence of more refined calculations, use the following method and Figures 19 and 20 to calculate estimated C.I.P. Topping concrete quantities:

$$V_{TOTAL} = V_M + V_P + V_E + V_F + V_D$$

$$V_M = \frac{\left(L - \frac{0.5'}{\sin\varnothing_{BEGINSPAN}} - \frac{0.5'}{\sin\varnothing_{ENDSPAN}}\right) \times W_C \times \left[C + \frac{B + D - 2C}{6}\right]}{27} \quad \text{Cases 1, 2 or 3}$$

or

$$= \frac{\left(L - \frac{0.5'}{\sin\varnothing_{BEGINSPAN}} - \frac{0.5'}{\sin\varnothing_{ENDSPAN}}\right) \times W_C \times \left[\frac{B + D}{2} + \left(\frac{2}{3}\left(C - \frac{B + D}{2}\right)\right)\right]}{27} \quad \text{Case 4}$$

$$V_P = \frac{\left(L - \frac{0.5'}{\sin\varnothing_{BEGINSPAN}} - \frac{0.5'}{\sin\varnothing_{ENDSPAN}}\right) \times \left(\frac{W_G}{12} + 1'\right) \times \left(\frac{D_{FSB} - 4''}{12}\right) \times (N_{FSB} - 1)}{27}$$

$$V_E = \frac{\left(L - \frac{0.5'}{\sin\varnothing_{BEGINSPAN}} - \frac{0.5'}{\sin\varnothing_{ENDSPAN}}\right) \times 0.9167' \times \left(\frac{D_{FSB} - 4''}{12}\right)}{27}$$

$$V_F = \frac{\left(L - \frac{0.5'}{\sin\varnothing_{BEGINSPAN}} - \frac{0.5'}{\sin\varnothing_{ENDSPAN}}\right) \times 0.0278ft^2 \times N_{FSB}}{27}$$

$$V_D = \frac{\left[\frac{W_C}{\sin\varnothing_{BEGINSPAN}} \times 0.5' \times \left(\frac{D_{FSB}}{12} + B\right)\right] + \left[\frac{W_C}{\sin\varnothing_{ENDSPAN}} \times 0.5' \times \left(\frac{D_{FSB}}{12} + D\right)\right]}{27}$$

Where:

V_{TOTAL} = Total Volume of C.I.P. Topping per span [cubic yards]

V_M = Volume of C.I.P. Topping above FSBs for Cases 1, 2, 3 or 4 [cubic yards]

V_P = Volume of C.I.P. Topping within pockets between FSBs [cubic yards]

V_E = Volume of C.I.P. Topping within pockets adjacent to coping lines [cubic yards]

V_F = Volume of C.I.P. Topping within fillets at top corners of FSBs [cubic yards]

V_D = Volume of C.I.P. Topping within end diaphragms [cubic yards]

L= Span length measured along centerline of deck [feet]

$Ø_{BEGIN\ SPAN}$ = Angle Ø at Begin Span [degrees]

$Ø_{END\ SPAN}$ = Angle Ø at End Span [degrees]

W_C = Horizontal dimension between coping lines measured perpendicular to the coping lines [feet]

B, C and D = C.I.P. Topping thickness at begin span, centerline span and end span, respectively [feet]

W_G = Uniform width of gaps between FSBs measured along the cross slope at the bottom of the FSBs [inches]

D_{FSB} = FSB depth [12", 15" or 18"]

N_{FSB} = Total number of FSBs used for a given bridge width

Figure 19 Topping Thickness Schematic (1 of 2)

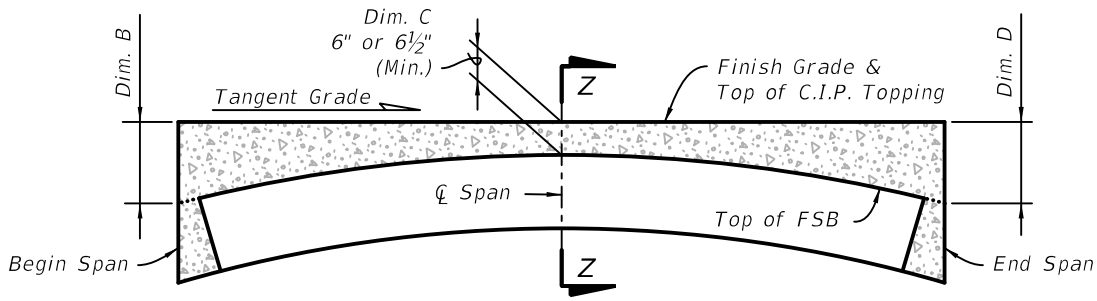

TOPPING DIAGRAM FOR TANGENT SPANS
CONTROL AT ℄ SPAN (CASE 1)

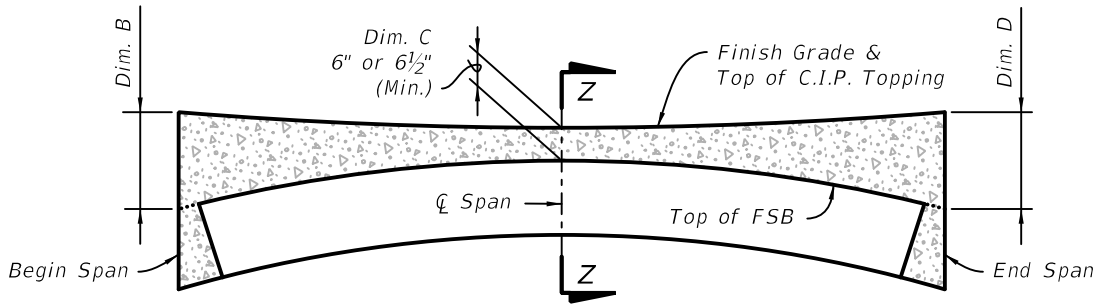

TOPPING DIAGRAM FOR SAG VERTICAL CURVE SPANS
CONTROL AT ℄ SPAN (CASE 2)

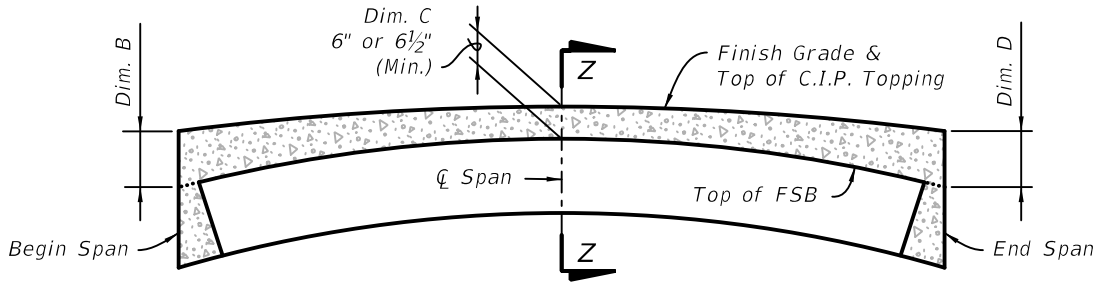

TOPPING DIAGRAM FOR CREST VERTICAL CURVE SPANS
CONTROL AT ℄ SPAN (CASE 3)

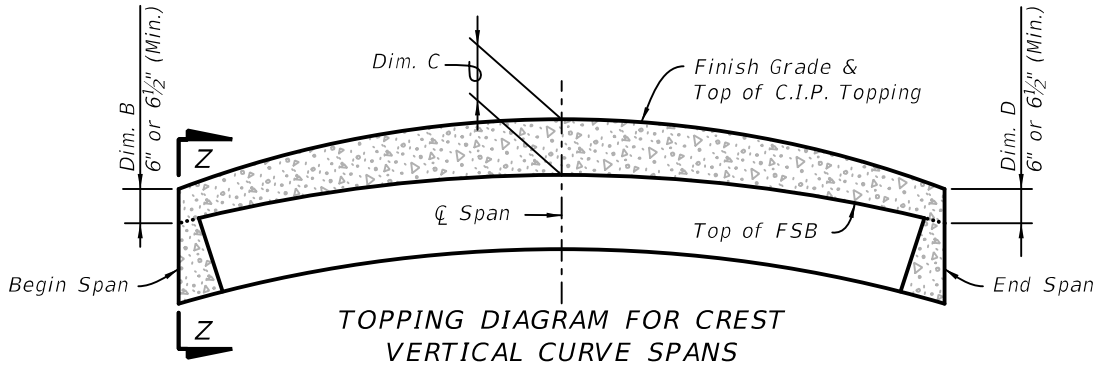

TOPPING DIAGRAM FOR CREST
VERTICAL CURVE SPANS
CONTROL AT BEGIN OR END SPAN (CASE 4)

Figure 20 C.I.P. Topping Thickness Schematic (2 of 2)

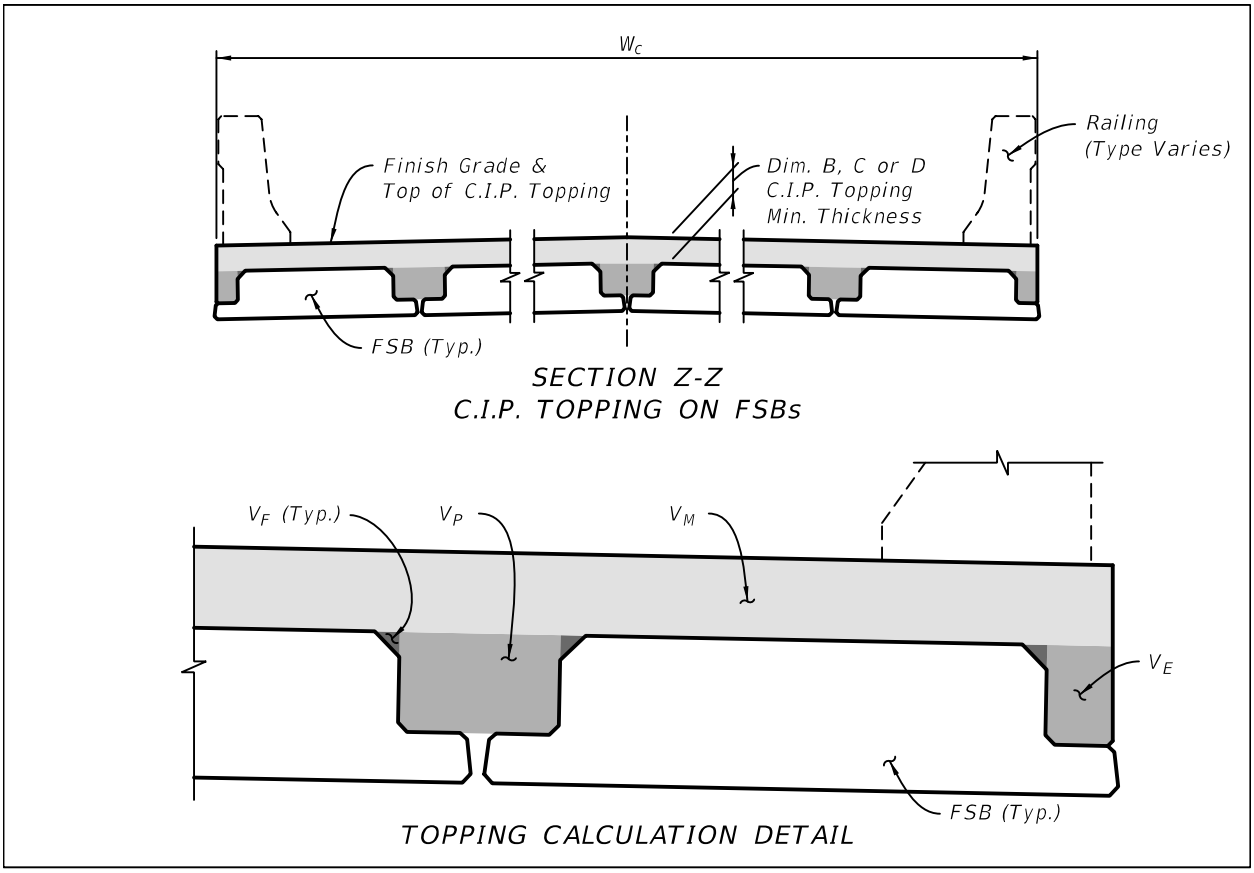

Payment

Item number	Item description	Unit Measure
450-8-AB	Prestressed Beam: Florida Slab Beam	LF
400-2-47	Concrete Class II, CIP Topping with Shrinkage Reducing Admixture	CY
400-4-47	Concrete Class IV, CIP Topping with Shrinkage Reducing Admixture	CY
400-148	Plain Neoprene Bearing Pads	CF

Example Problem

The following example shows the data required for completion of "Florida Slab Beams - Table of Variables" CADD cell for Florida Slab Beams. The example assumes a four span bridge designed for the following conditions:

Live Load: HL-93

Environment (Superstructure): Slightly Aggressive

Bridge Characteristics:

Length: 160'-0" (Overall length of bridge)

Width: 43'-1" (coping to coping)

Roadway cross section: Two 12'-0" lanes, two 10'-0" shoulders (40'-0" clear width), crowned cross section with cross slopes of 0.02 ft/ft., two 32" F-Shape traffic railings

Horizontal Alignment: Straight

Vertical Alignment: 0.0% Grade

Skew Angle: 0.0°

Superstructure: Four 39'-9½" (overall span length) simple spans of 12" FSBs with 6.5-inch composite concrete topping

Slab Beam Selection: FSB 12 x 51

Design Span Length: 37'-8½" (Centerline Bearing to Centerline Bearing)

Click the following link to view the Example Drawings that correspond to this Sample Problem: **Example Drawings**

Design Aids

Table of Recommended Maximum Span Lengths (CL Bearing to CL Bearing)				
Beam Type	**6" C.I.P. Topping w/ Future Wearing Surface (Short Bridge)**		**6½" C.I.P. Topping w/ ½" Sacrificial Thickness (Long Bridge)**	
	Beam Width		**Beam Width**	
	4'-0"	**5'-0"**	**4'-0"**	**5'-0"**
12" FSB	40'-11"	43'-11"	41'-2"	44'-5"
15" FSB	52'-11"	56'-3"	53'-3"	56'-9"
18" FSB	62'-3"	64'-4"	62'-8"	64'-10"

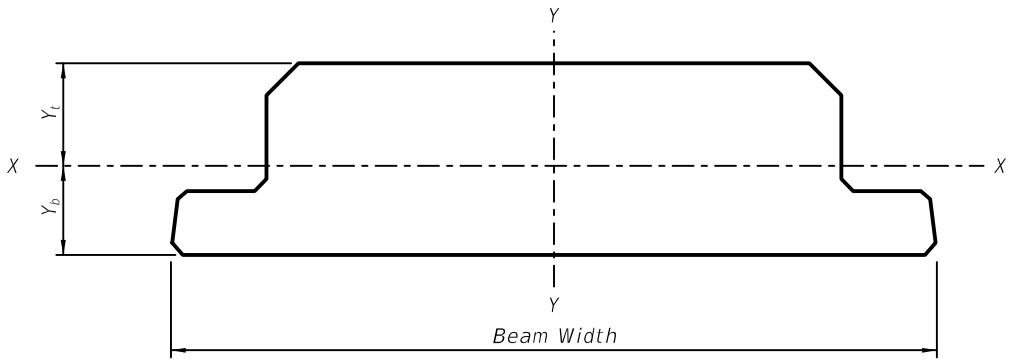

FSB
(INDEX D20450)

12" Florida Slab Beams – Cross Section Properties						
Beam Width	**Area (in.^{2})**	**Perimeter (in.)**	**I_{xx} (in.^{4})**	**I_{yy} (in.^{4})**	**Y_t (in.)**	**Y_b (in.)**
4'-0"	473.76	114.33	5,772	65,367	6.43	5.57
4'-1"	485.76	116.33	5,918	70,257	6.42	5.58
4'-2"	497.76	118.33	6,064	75,389	6.41	5.59
4'-3"	509.76	120.33	6,210	80,771	6.4	5.6
4'-4"	521.76	122.33	6,356	86,407	6.39	5.61
4'-5"	533.76	124.32	6,502	92,304	6.38	5.62
4'-6"	545.76	126.33	6,647	98,468	6.37	5.63
4'-7"	557.76	128.33	6,793	104,906	6.37	5.63
4'-8"	569.76	130.32	6,938	111,621	6.36	5.64
4'-9"	581.76	132.33	7,084	118,622	6.35	5.65
4'-10"	593.76	134.33	7,229	125,914	6.34	5.66
4'-11"	605.76	136.32	7,375	133,502	6.34	5.66
5'-0"	617.76	138.33	7,520	141,393	6.33	5.67

15" Florida Slab Beams – Cross Section Properties						
Beam Width	**Area (in.^{2})**	**Perimeter (in.)**	**I_{xx} (in.^{4})**	**I_{yy} (in.^{4})**	**Y_t (in.)**	**Y_b (in.)**
4'-0"	581.76	120.33	11,245	77,031	7.98	7.02
4'-1"	596.76	122.33	11,529	82,920	7.97	7.03
4'-2"	611.76	124.32	11,814	89,108	7.96	7.04
4'-3"	626.76	126.33	12,098	95,601	7.94	7.06
4'-4"	641.76	128.33	12,382	102,407	7.93	7.07
4'-5"	656.76	130.32	12,666	109,535	7.92	7.08
4'-6"	671.76	132.33	12,950	116,990	7.91	7.09
4'-7"	686.76	134.33	13,234	124,782	7.91	7.09
4'-8"	701.76	136.33	13,518	132,917	7.9	7.1
4'-9"	716.76	138.33	13,801	141,403	7.89	7.11
4'-10"	731.76	140.33	14,085	150,247	7.88	7.12
4'-11"	746.76	142.32	14,368	159,458	7.87	7.13
5'-0"	761.76	144.33	14,651	169,041	7.87	7.13

18" Florida Slab Beams – Cross Section Properties						
Beam Width	**Area (in.^{2})**	**Perimeter (in.)**	**I_{xx} (in.^{4})**	**I_{yy} (in.^{4})**	**Y_t (in.)**	**Y_b (in.)**
4'-0"	689.76	126.33	19,334	88,695	9.51	8.49
4'-1"	707.76	128.33	19,824	95,583	9.5	8.5
4'-2"	725.76	130.32	20,315	102,825	9.49	8.51
4'-3"	743.76	132.33	20,805	110,430	9.47	8.53
4'-4"	761.76	134.33	21,295	118,407	9.46	8.54
4'-5"	779.76	136.32	21,785	126,765	9.45	8.55
4'-6"	797.76	138.33	22,274	135,512	9.44	8.56
4'-7"	815.76	140.33	22,764	144,659	9.43	8.57
4'-8"	833.76	142.33	23,253	154,213	9.42	8.58
4'-9"	851.76	144.33	23,742	164,185	9.41	8.59
4'-10"	869.76	146.33	24,231	174,582	9.41	8.59
4'-11"	887.76	148.32	24,720	185,413	9.4	8.6
5'-0"	905.76	150.33	25,208	195,689	9.39	8.61