GENERAL NOTES

1. Shop Drawings: This Index is considered fully detailed, only submit shop drawings for minor modifications not detailed in the Plans.

2. Prior to Fabrication: Verify the installed foundation elevation will result in the required signal elevation and adjust the Pole height as needed.

3. Details for Signal and Sign locations, Signal Head attachment, Sign attachment, Pedestrian Head attachment, and Foundation Conduit are not shown for simplicity.

4. Materials:
   - Split-lock washers and self-locking nuts are not permitted
   - A. Poles, Mast Arms and Backing Rings:
     - a. Less than 3/16": ASTM A1011 Grade 50, 55, 60 or 65
     - b. Greater than or equal to 3/16": ASTM A572 Grade 50, 55, 60 or 65
     - c. ASTM A595 Grade A (55 ksi yield) or Grade B (60 ksi yield)
   - B. Steel Plates: ASTM A36
   - C. Weld Metal: E70XX
   - D. Bolts, Nuts and Washers:
     - a. High Strength Bolts: ASTM F3125, Grade A325, Type 1
     - b. Nuts: ASTM A563 DH Heavy-Hex
     - c. Washers: ASTM F436 Type 1, one under turned element
   - E. Anchor Bolts, Nuts and Washers:
     - a. Anchor Bolts: ASTM F1554 Grade 55
     - b. Nuts: ASTM A563 Grade A Heavy-Hex (5 per anchor bolt)
     - c. Plate Washers: ASTM A36 (2 per bolt)
   - F. Threaded Bars/Studs: ASTM A36 or ASTM A307
   - G. Handhole Frame: ASTM A709 or ASTM A36, Grade 36
   - H. Handhole Cover: ASTM A1011 Grade 50, 55, 60 or 65
   - I. Aluminum Pole Caps and Nut Covers: ASTM B26 (319-F)
   - J. Stainless Steel Screws: AISI Type 316
   - K. Concrete: Class IV (Drilled Shaft) for all environmental classifications.
   - L. Reinforcing Steel: Specification Section 415

5. Fabrication:
   - A. Pole and Mast Arm Taper: Change diameter at a rate of 0.14 inches per foot.
   - B. Upright splices are not allowed. Transverse welds are only permitted at the base.
   - C. First and Second arm camber angle = 2°
   - D. Provide bolt hole diameters as follows:
     - a. Bolts (except Anchor Bolts): Bolt diameter plus 1/16", prior to galvanizing.
     - b. Anchor Bolts: Bolt diameter plus 1/2" (Max.)
   - E. Face handhole perpendicular from arm on single arm poles, perpendicular from first arm of double arm poles facing away from traffic or see special instructions on the Mast Arm Tabulation Sheet.
   - F. Seam weld on bottom side of arm. Seam weld under Arm 1 side of pole.
   - G. Provide a 'J' or 'C' hook at the top of the pole for signal wiring support (See Sheet 6).
   - H. Perform all welding in accordance with Specification Section 460-6.4.
   - I. Hot Dip Galvanize after fabrication.

6. Coatings:
   - A. All Nuts, Bolts, Washers and Threaded Bars/Studs: ASTM F2329
   - B. All other steel items ASTM A123

7. Construction:
   - A. Foundation: Specification Section 455 Drilled Shaft, except that payment is included in the cost of the Mast Arm.
   - B. Install Pole vertically.
   - C. Place structural grout pad with drain between top of foundation and bottom of baseplate in accordance with Specification Section 649-7.
   - D. Attach Sign Panels and Signals centered on the elevation of the Mast Arm.
   - E. Wire Access holes are 1 1/2" or less in diameter.

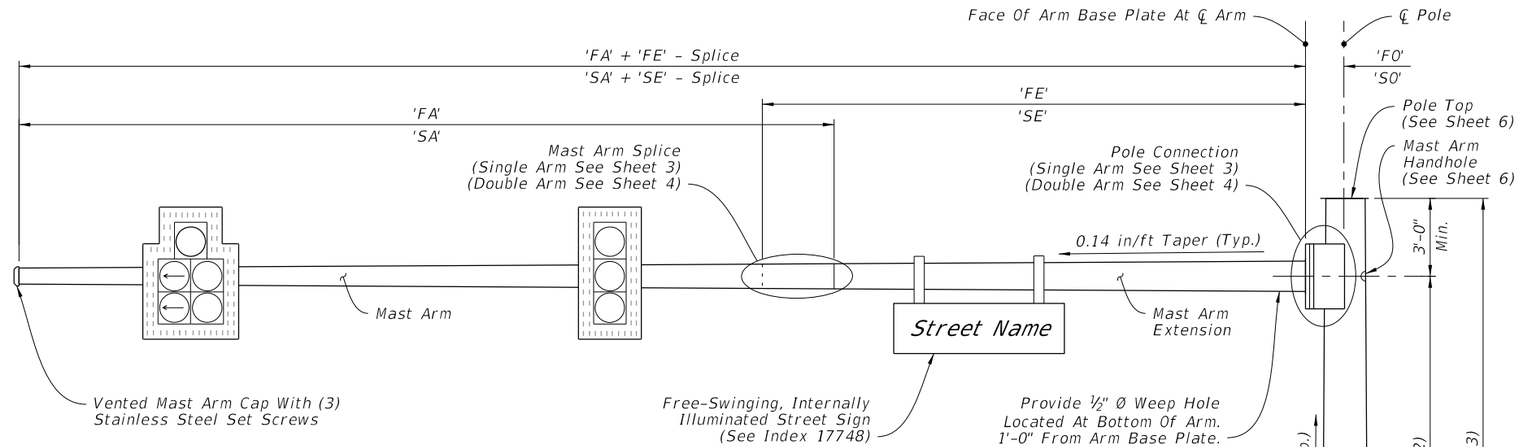

Aluminum Identification Tag not to exceed 2" x 4". Secure to pole by 1/8" stainless steel rivets or screws. Fabricators to provide details for approval. Identification Tag located on inside of pole visible from handhole, or on outside of pole inside Terminal Compartment. Tag to be stamped with the following information:

Standard Design	Special Design
Financial Project ID	Financial Project ID
Pole Type	Manufacturer's Name
Arm Type	Pole Base (F_y of Steel)
Manufacturer's Name	Arm (F_y of Steel)
Pole Base (F_y of Steel)	Pole Wall Thickness (in.)
Arm (F_y of Steel)	Arm Wall Thickness (in.)

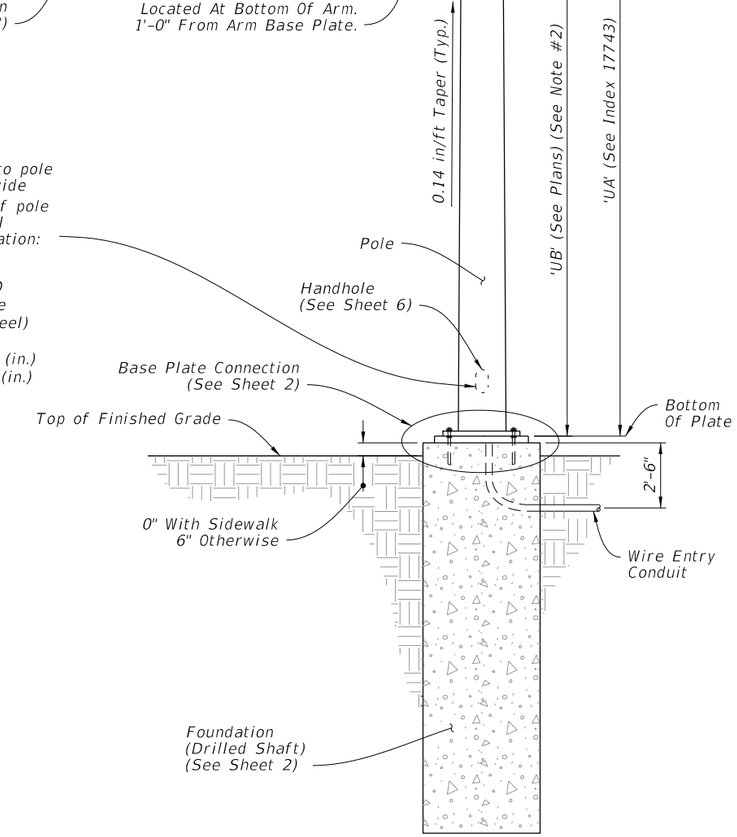

Single Arm Shown, Double Arm Similar (Luminaire Arm Not Shown)

MAST ARM ASSEMBLY

TABLE OF CONTENTS

SHEET NO.	SUBJECT
1	Elevation and Notes
2	Foundation and Base Plate Details
3	Single Arm Connection and Splice Details
4	Double Arm Connection and Splice Details
5	Luminaire Arm and Connection Details
6	Handhole and Pole Top Details

ELEVATION AND NOTES

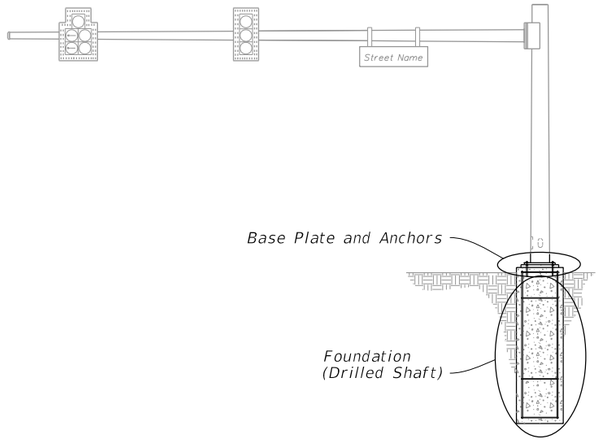

MAST ARM ASSEMBLY

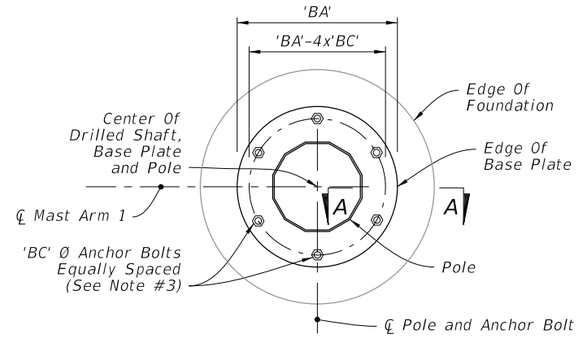

(6 Anchor Bolts)

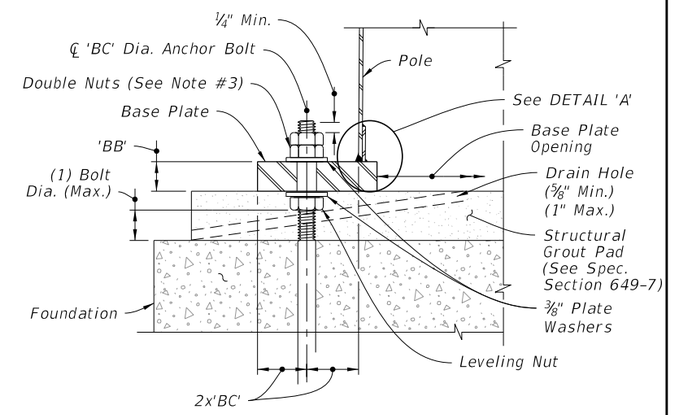

SECTION A-A

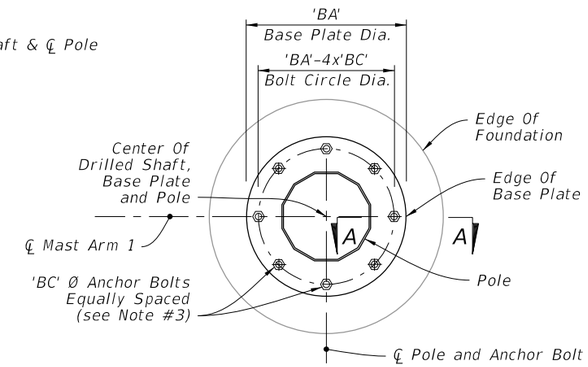

(8 Anchor Bolts)

PLAN

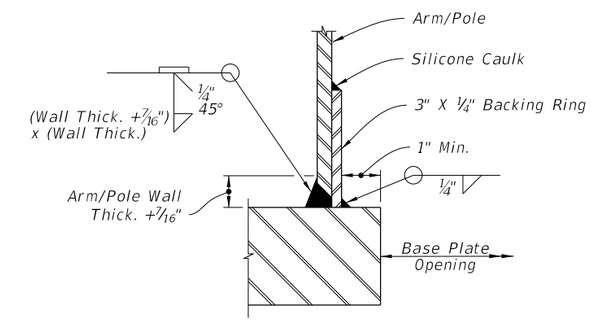

JOINT WELD DETAIL

DETAIL 'A'

NOTES:

1. The Structural Grout Pad diameter may be reduced where the footprint of the Grout Pad does not provide adequate clearance for the sidewalk and/or accessibility considerations.
2. See Index No. 17743 and the plans for actual quantity of bolts in the Base Plate Connection.
3. The bottom hex nut of the double nuts shown in Section A-A may be substituted by a ½" height 'jam' nut. Provide individual nut covers (not shown) for each bolt.

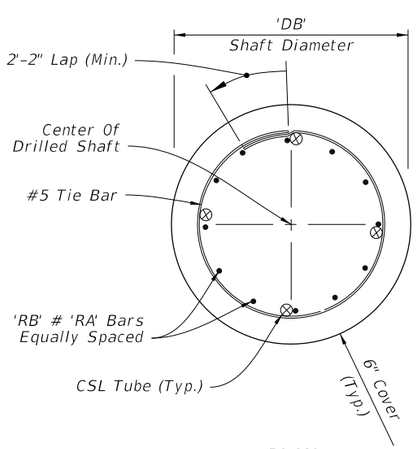

PLAN

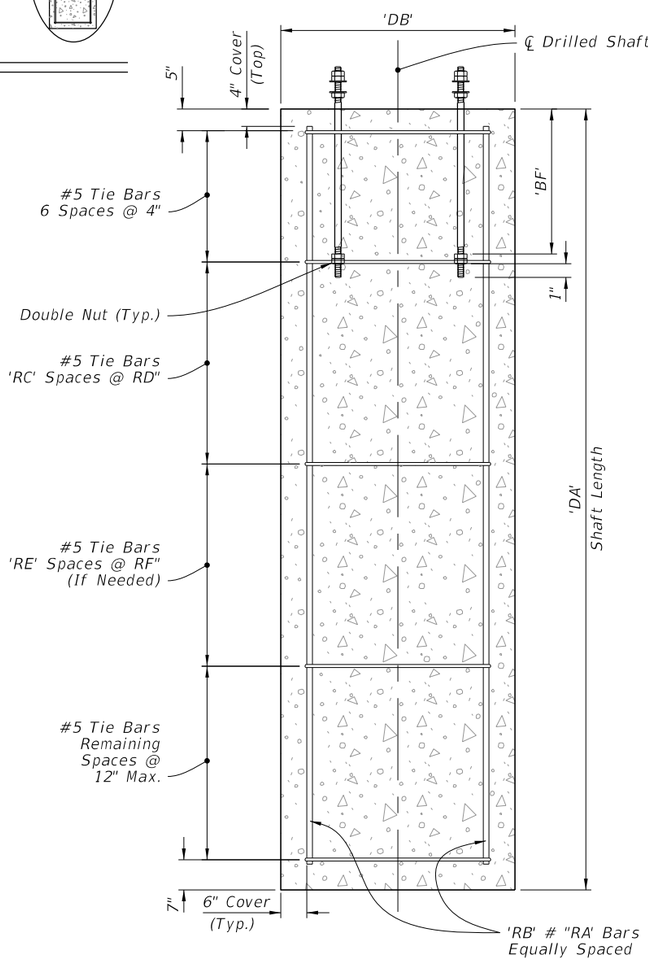

ELEVATION

FOUNDATION

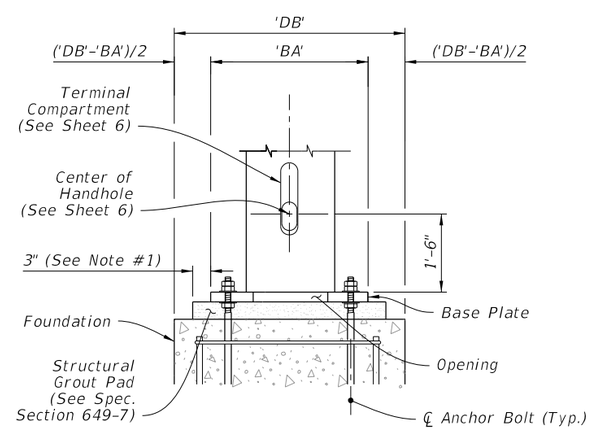

ELEVATION
(Back Face Shown)

BASE PLATE CONNECTION

FOUNDATION AND BASE PLATE DETAILS

LAST REVISION	REVISION	DESCRIPTION:			INDEX NO.	SHEET NO.
11/01/16			FY 2017-18 DESIGN STANDARDS	MAST ARM ASSEMBLIES	17745	2 of 6

10/14/2016 1:16:10 PM

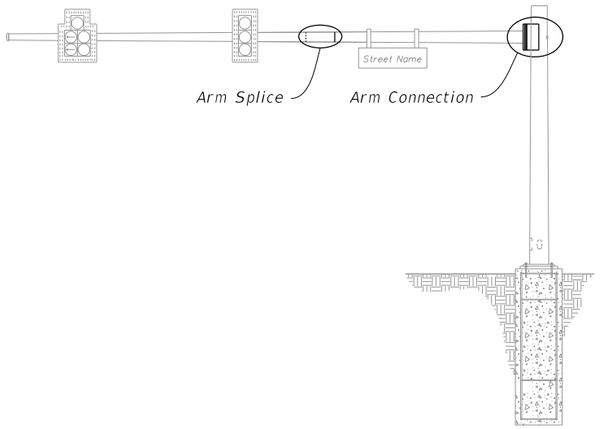

MAST ARM ASSEMBLY

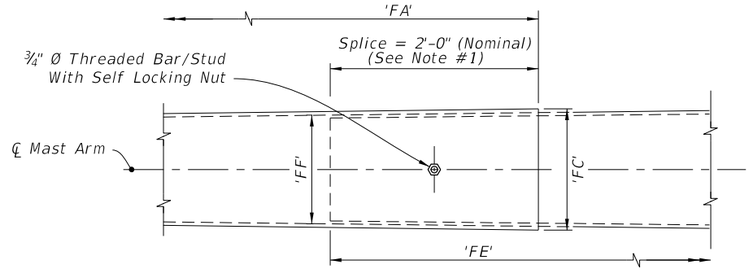

ARM SPLICE

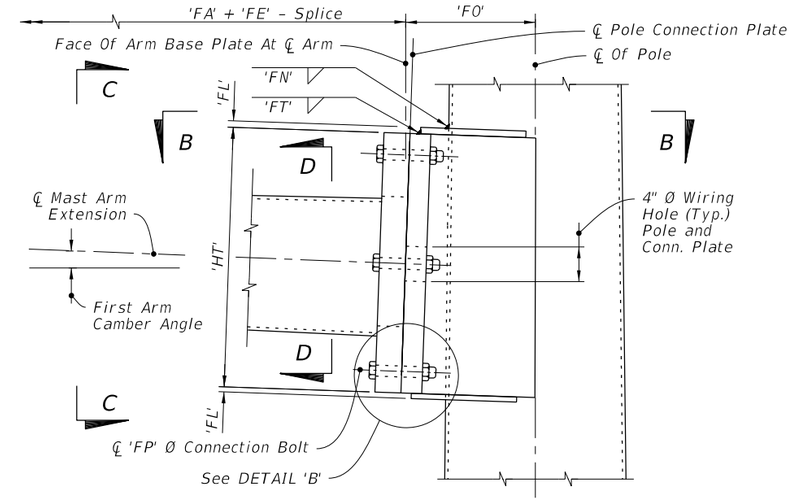

SINGLE ARM CONNECTION

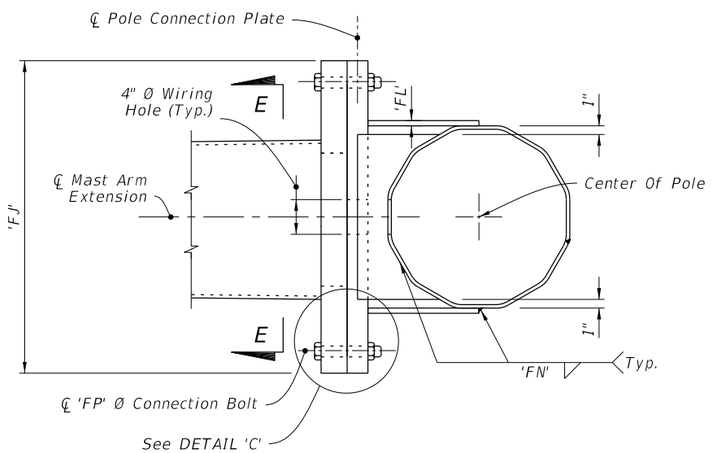

SECTION B-B

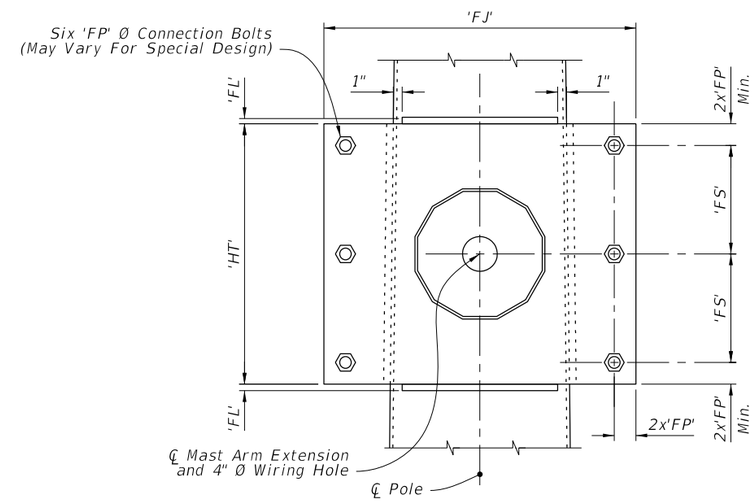

SECTION C-C

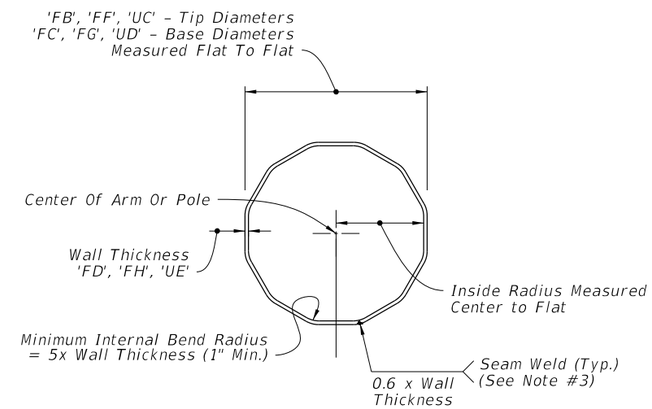

SECTION D-D

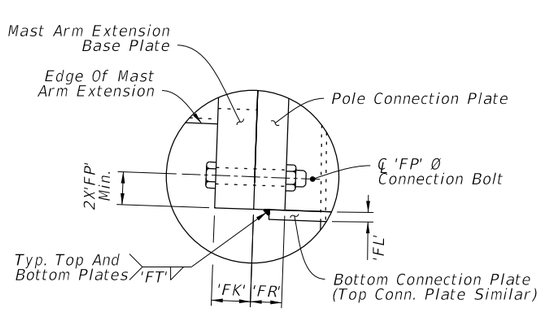

DETAIL 'B'

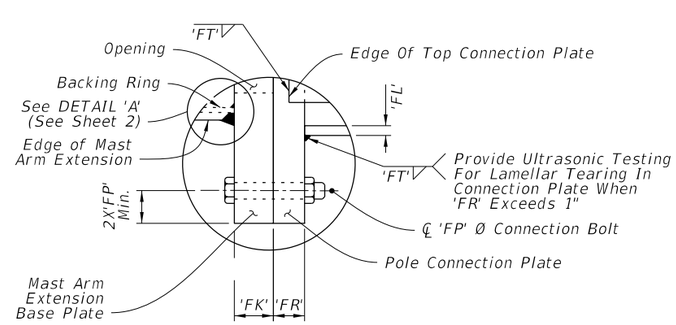

DETAIL 'C'

NOTE:

1. Install the 'Slip Joint' splice with a tight fit and no change in the Mast Arm taper due to the splice.
2. Details shown on this sheet are for 12 sided pole sections. However, sections with more than 12 sides and round sections are permitted provided outside diameter and wall thickness are not reduced.
3. Match mark the Arm and Connection Plates to ensure proper assembly and the seam weld is in the proper location (seam located at the bottom side of the Arm).

SINGLE ARM CONNECTIONS & SPLICE DETAILS

10/25/2016 8:28:48 AM

LAST REVISION	REVISION	DESCRIPTION:			INDEX NO.	SHEET NO.
11/01/16			FY 2017-18 DESIGN STANDARDS	MAST ARM ASSEMBLIES	17745	3 of 6

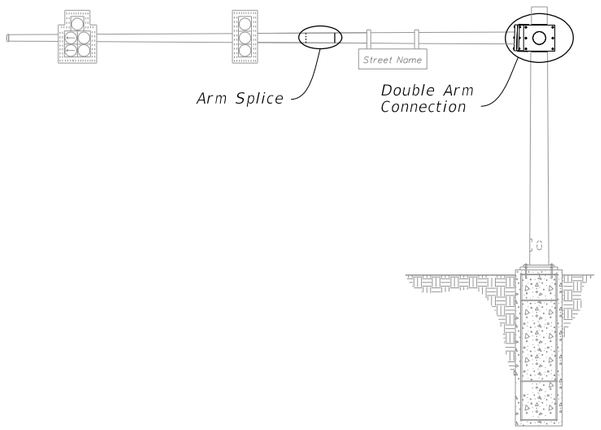

MAST ARM ASSEMBLY

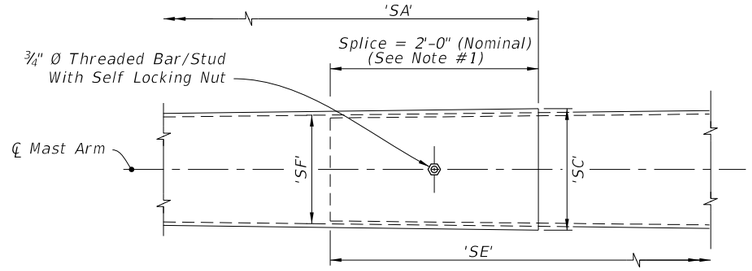

ARM SPLICE

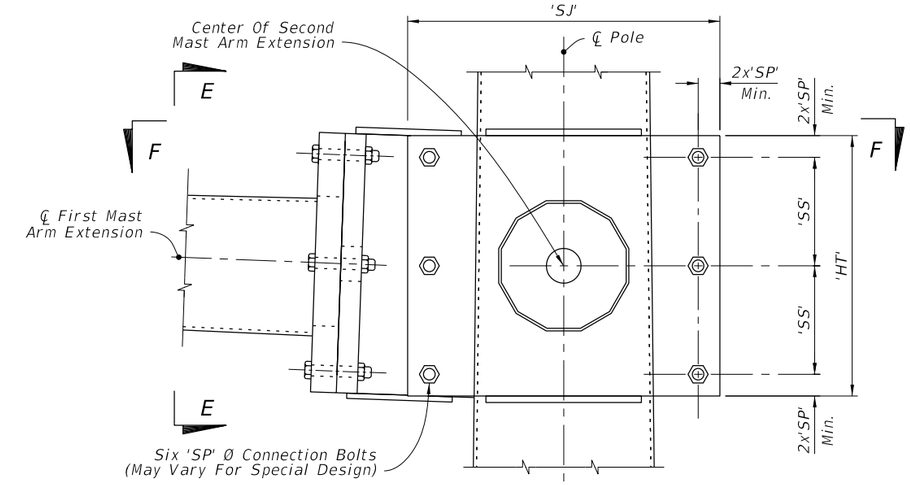

DOUBLE ARM CONNECTION

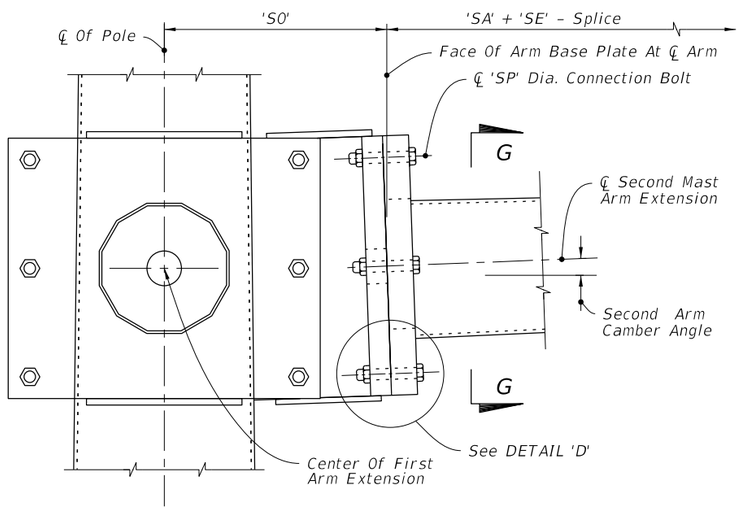

SECTION E-E

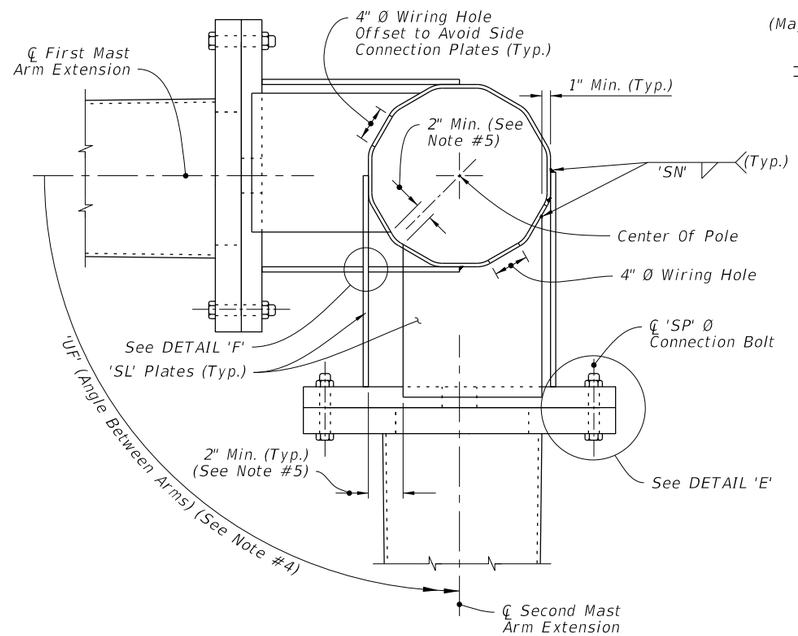

SECTION F-F

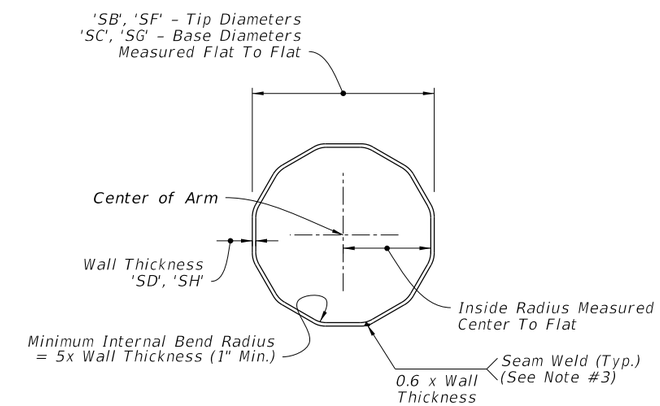

SECTION G-G

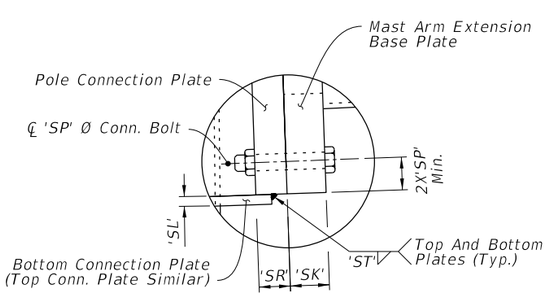

DETAIL 'D'

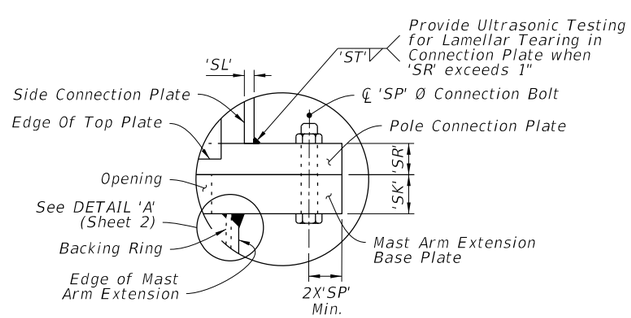

DETAIL 'E'

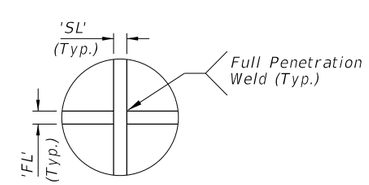

DETAIL 'F'

NOTE:

1. Install the 'Slip Joint' splice with a tight fit and no change in the Mast Arm taper due to the splice.
2. Details shown on this sheet are for 12 sided pole sections. However, sections with more than 12 sides and round sections are permitted provided outside diameter and wall thickness are not reduced.
3. Match mark the Arm and Connection Plates to ensure proper assembly and the seam weld is in the proper location (seam located at the bottom side of the Arm).
4. 'UF' measured counter clockwise from ℄ First Mast Arm Extension.
5. Adjust width of top and bottom Connection Plates to maintain minimum clearance shown.

DOUBLE ARM CONNECTIONS & SPLICE DETAILS

LAST REVISION	REVISION	DESCRIPTION:			INDEX NO.	SHEET NO.
11/01/16			FDOT FY 2017-18 DESIGN STANDARDS	MAST ARM ASSEMBLIES	17745	4 of 6

10/25/2016 8:28:58 AM

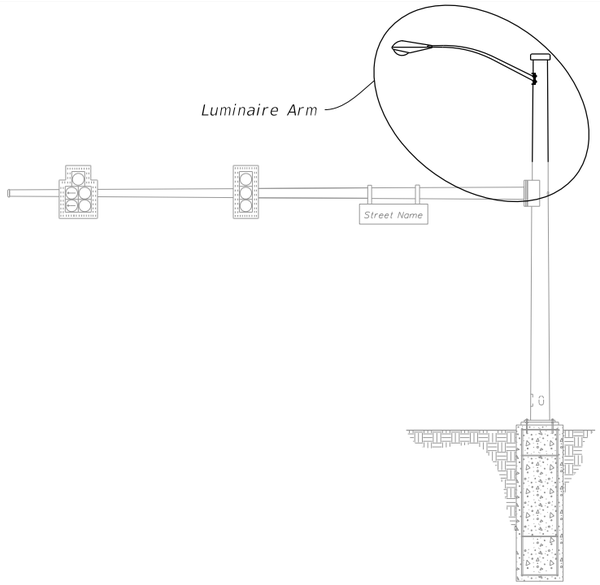

MAST ARM ASSEMBLY

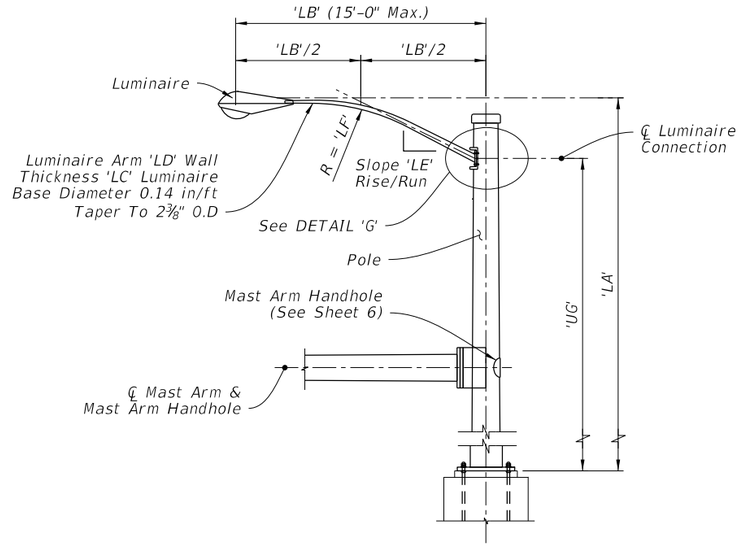

LUMINAIRE ELEVATION

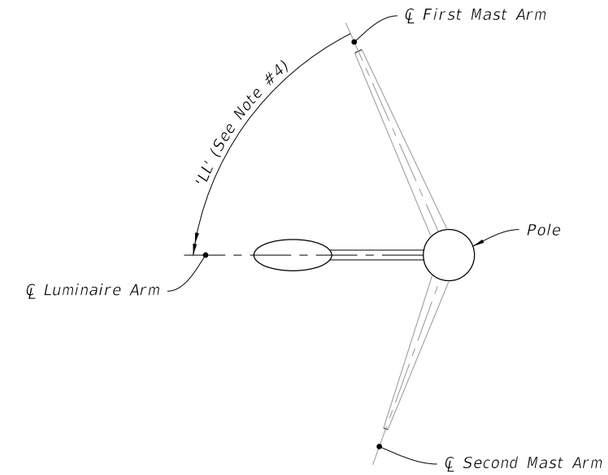

LUMINAIRE ORIENTATION

NOTES:

1. Luminaire type and luminaire length may be found in the Lighting Plans.
2. Align Luminaire Arm with Single Mast Arm or First Arm of Double Mast Arm unless indicated otherwise in the plans.
3. The fabricator may substitute a ½" thick bent plate with the same flange width, height, and length as the MC 10x33.6 Channel section.
4. 'LL' measure counter clockwise from First Mast Arm.

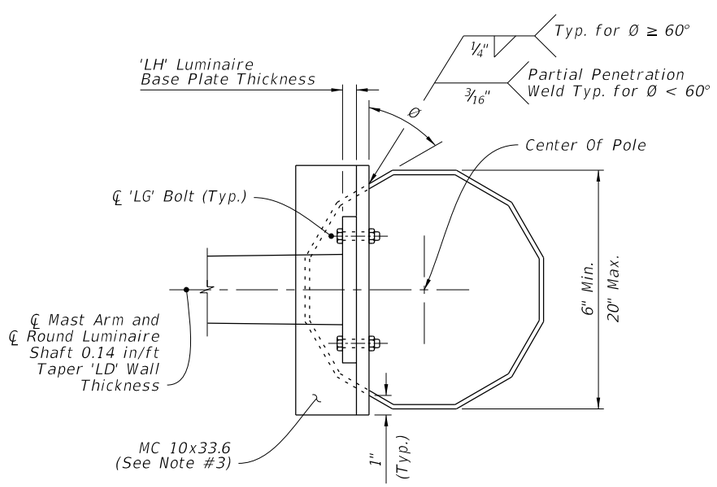

SECTION H-H

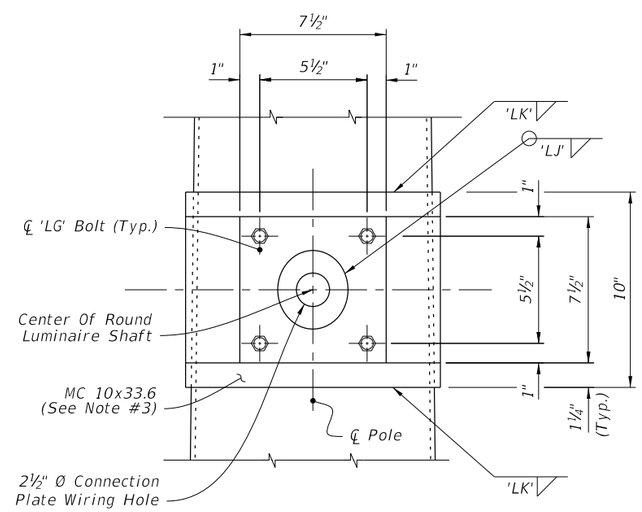

SECTION I-I

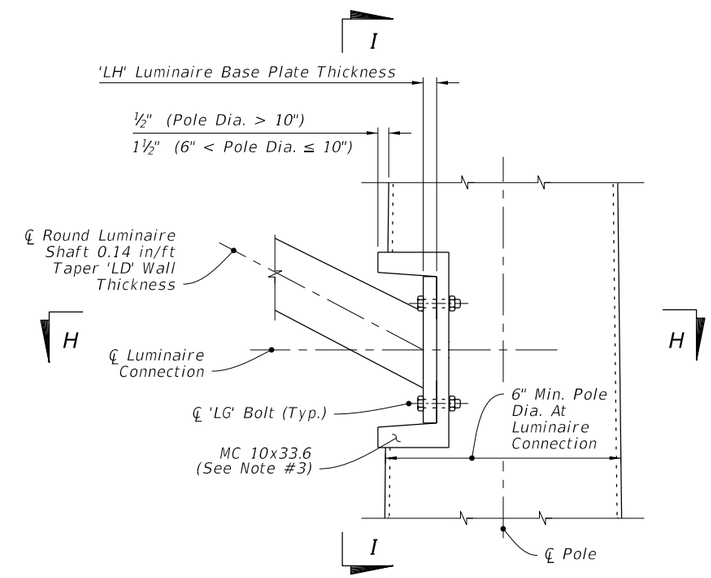

LUMINAIRE CONNECTION ELEVATION

DETAIL 'G'

LUMINAIRE ARM AND CONNECTION DETAILS

LAST REVISION	REVISION	DESCRIPTION:			INDEX NO.	SHEET NO.
11/01/16			FDOT FY 2017-18 DESIGN STANDARDS	MAST ARM ASSEMBLIES	17745	5 of 6

10/14/2016 1:16:18 PM

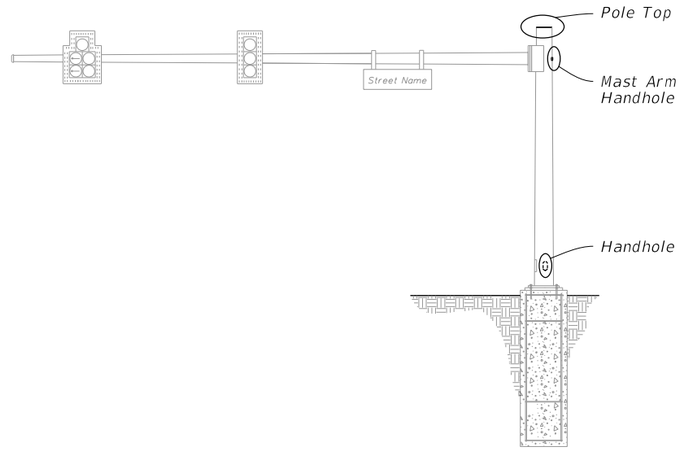

MAST ARM ASSEMBLY

NOTES:

1. Handhole covers may be omitted when Terminal Compartment is provided.
2. Terminal Compartment is optional. See Mast Arm Tabulation to see if required and for locations.
3. Terminal Compartment Frame Height 2'-0" minimum to 2'-6" maximum. Align bottom of Terminal Compartment a minimum of 1" below the bottom of the Handhole Frame.
4. Any combination of Option 'a' or 'b' may be used, provided both lifting and wiring is accommodated.

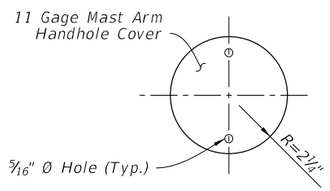

COVER

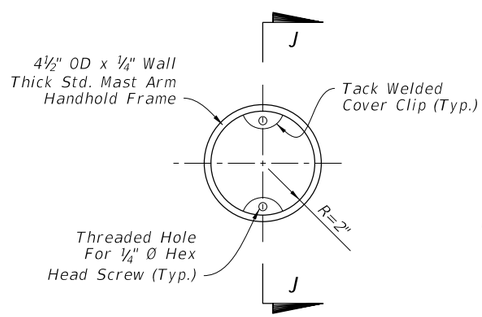

FRAME

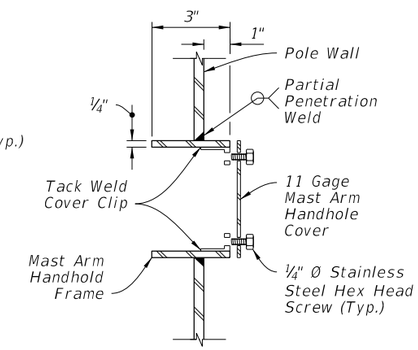

SECTION J-J

MAST ARM HANDHOLE

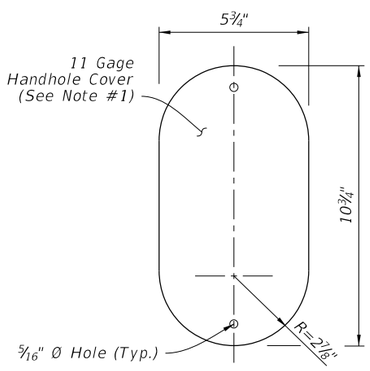

COVER

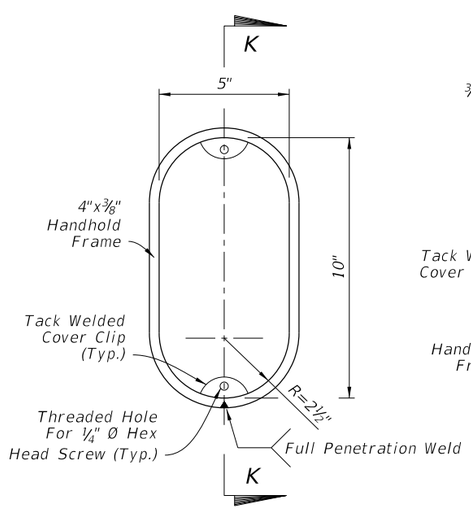

FRAME

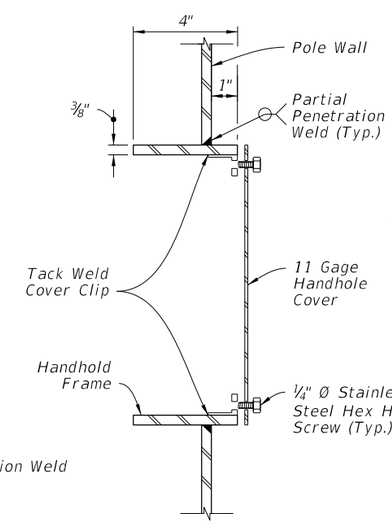

SECTION K-K
(Thru Handhole)

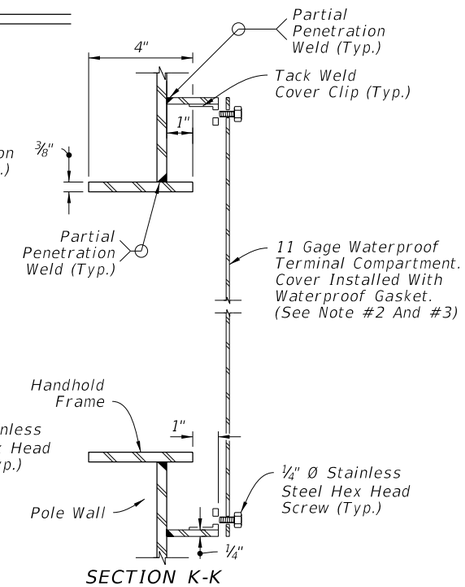

SECTION K-K
(Terminal Compartment)

HANDHOLE

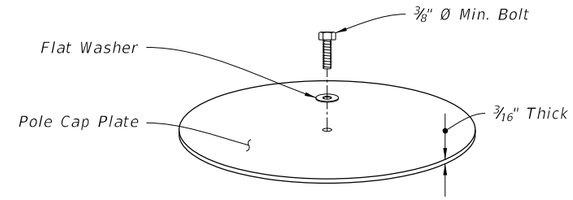

ISO VIEW
(Option 'a')

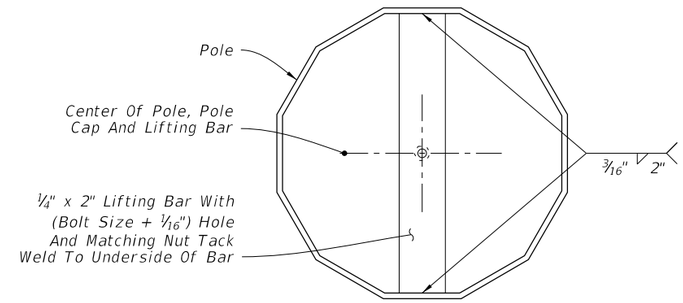

TOP VIEW
(Option 'a')

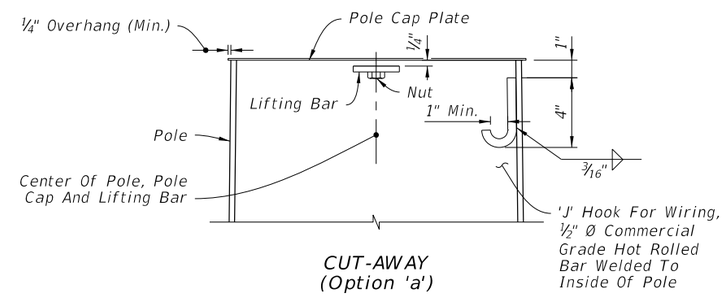

CUT-AWAY
(Option 'a')

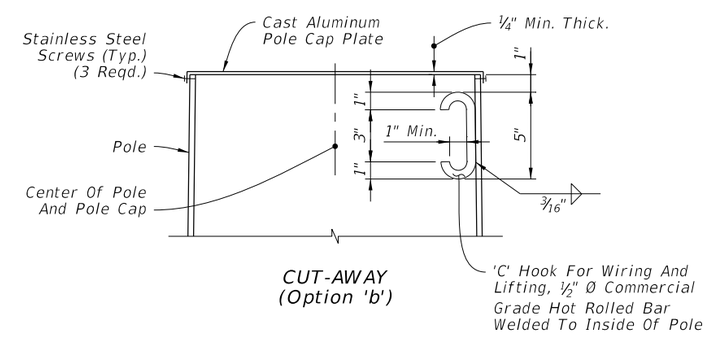

CUT-AWAY
(Option 'b')

POLE TOP

HANDHOLD AND POLE TOP DETAILS

10/20/2016 8:16:50 AM

LAST REVISION	REVISION	DESCRIPTION:			INDEX NO.	SHEET NO.
11/01/16			FDOT FY 2017-18 DESIGN STANDARDS	MAST ARM ASSEMBLIES	17745	6 of 6