NOTES:

1. Work this Index in conjunction with SPAN SIGN STRUCTURE DATA TABLES in the Plans and Index 11300.

2. Handholes at the pole base are required for DMS Structures. Refer to Index 18300 for Handhole Details.

3. Shop Drawings are required.

   Obtain Shop Drawing approval prior to fabrication. Include the following:
   A. Upright Pipe height ('C' & 'B') and foundation elevations: Verify dimensions in the field prior to submittal to ensure minimum vertical clearances of the sign panel over the roadway.
   B. Height of the foundation above adjacent ground.
   C. Anchor bolt orientation with respect to centerline of truss and the direction of traffic.
   D. Method to be used to provide the required parabolic camber (see Camber Diagram).
   E. Handholes at pole base (when required).

4. Materials:

   A. Sign Structure:
      a. Upright and Chords (Steel Pipe): API-5L-X42, 42 ksi yield or ASTM A500, Grade B (Min.)
      b. Steel Angles and Plates: ASTM A709 grade 36
      c. Weld Material: E70XX
   B. Bolts, Nuts and Washers:
      a. High Strength Bolts: ASTM F3125, Grade A325, Type 1
      b. Nuts: ASTM A563, Grade DH Heavy-Hex
      c. Washers: ASTM F436, Type 1, one under turned element
   C. Anchor Bolts, Nuts and Washers
      a. Anchor Bolts: ASTM F1554 Grade 55, threaded full length
      b. Nuts: ASTM A563 Grade A Heavy-Hex (5 per bolt)
      c. Plate Washers: ASTM A36 (2 per bolt)
   D. Concrete: Class IV (Drilled Shaft)
   E. Reinforcing Steel: Specification Section 415

5. Fabrication:

   A. Welding: Specification Section 460-6.4
   B. Chord Splices: Minimum splice spacing is three truss panel lengths apart and three truss panel lengths from the uprights. Chord Splices may be either the Standard Splice or the Alternate Splice but not both on the same structure.
   C. Upright splice: Not allowed
   D. Structural bolt hole diameters: Bolt diameter plus $\frac{1}{16}$".
   E. Anchor bolt hole diameters: Bolt diameter plus $\frac{1}{2}$".
   F. Hot Dip Galvanize after fabrication.
   G. Shop assemble the entire structure after galvanizing to validate/document alignment and clearance for bolted connections as well as contact between connecting plates. Take remedial action, if necessary, prior to shipment.
   H. Disassemble as necessary and secure components for shipment.

6. Coatings:

   A. Bolts, Nuts and Washers: ASTM F2329
   B. All other steel, including Plate Washers, hot dip galvanize: ASTM A123

7. Construction:

   A. Construct foundation in accordance with Specification Section 455 Drilled Shaft, except payment is included in the cost of the structure.
   B. Prior to erection, record the as-built anchor locations and submit to the Engineer.
   C. Provide a parabolic camber with the required upward deflection as shown on the Camber Diagram.
   D. Tighten nuts and bolts in accordance with Specification Section 700. Split-Lock Washers are not permitted.
   E. Install Aluminum Sign Panels as shown on the Elevation drawing per Production Plan.
   F. After installation, place wire screen between top of foundation and bottom of baseplate in accordance with Specification Section 649-6.

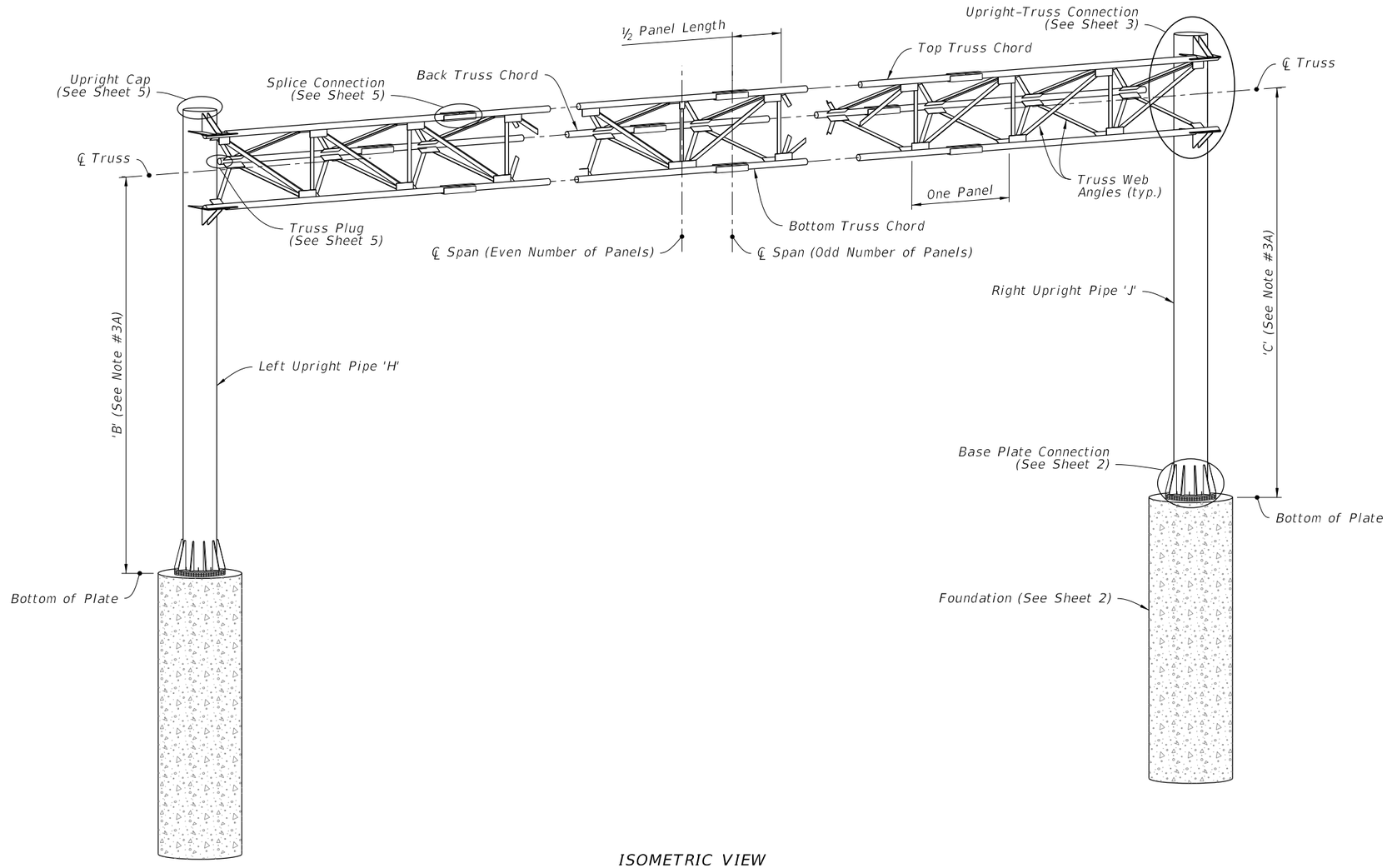

ISOMETRIC VIEW

SPAN SIGN ASSEMBLY

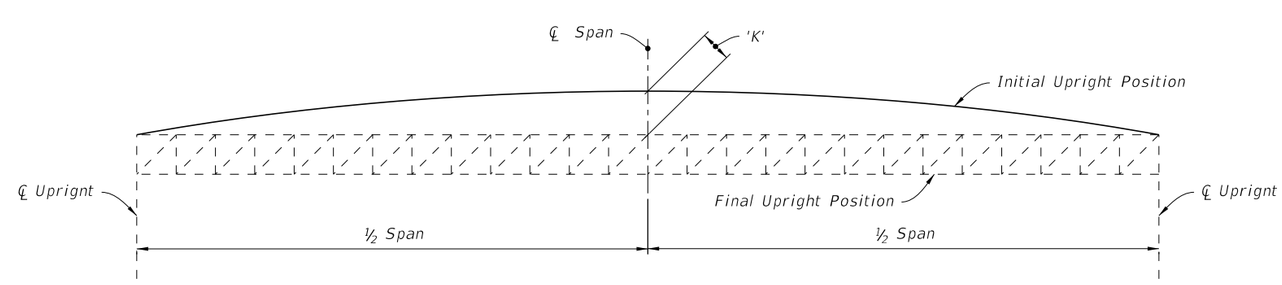

CAMBER DIAGRAM

10/14/2016 7:56:48 AM

LAST REVISION	REVISION	DESCRIPTION:			INDEX NO.	SHEET NO.
11/01/16			FDOT FY 2017-18 DESIGN STANDARDS	SPAN SIGN STRUCTURE	11320	1 of 5

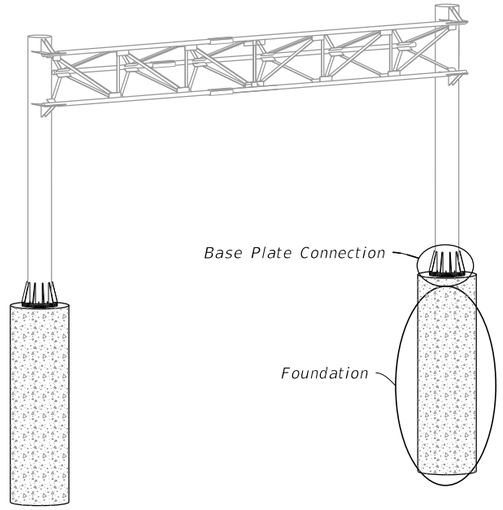

SPAN SIGN ASSEMBLY

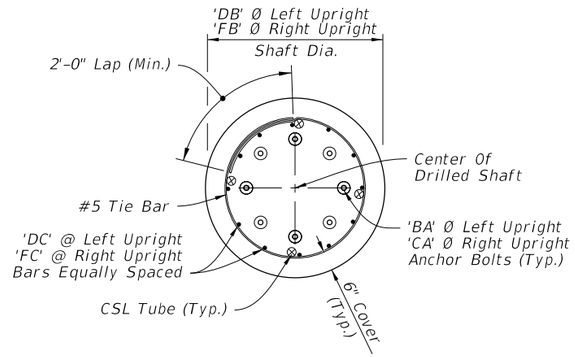

PLAN

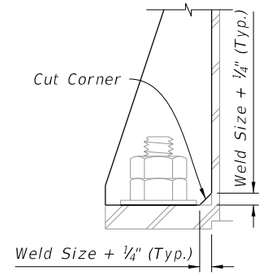

DETAIL "A"

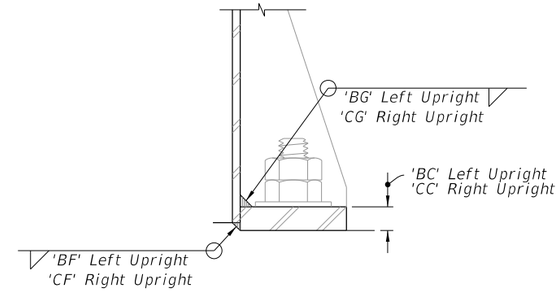

DETAIL "B"

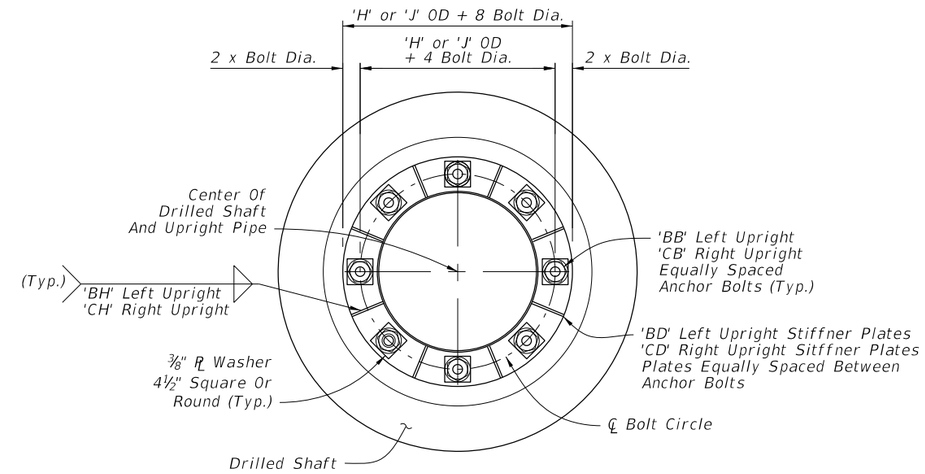

PLAN

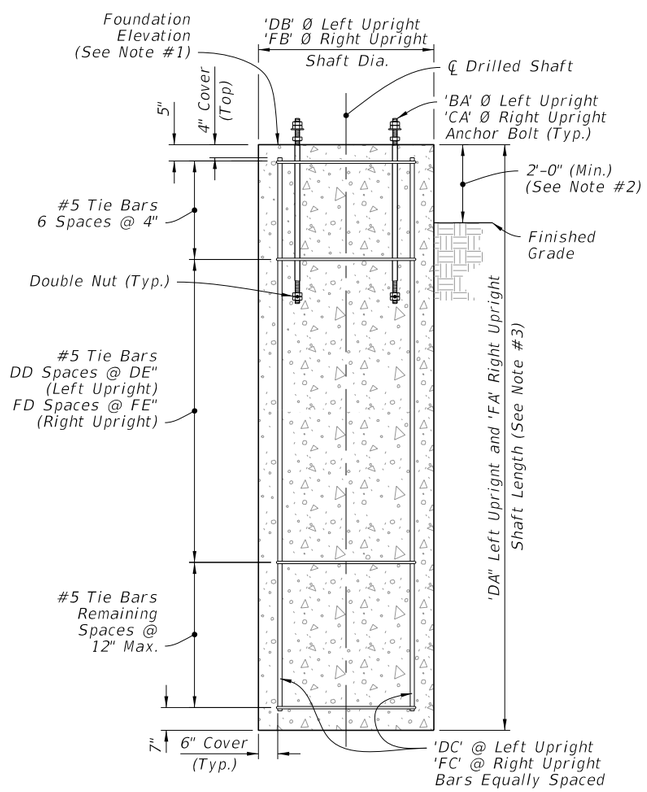

ELEVATION

DRILLED SHAFT

FOUNDATION

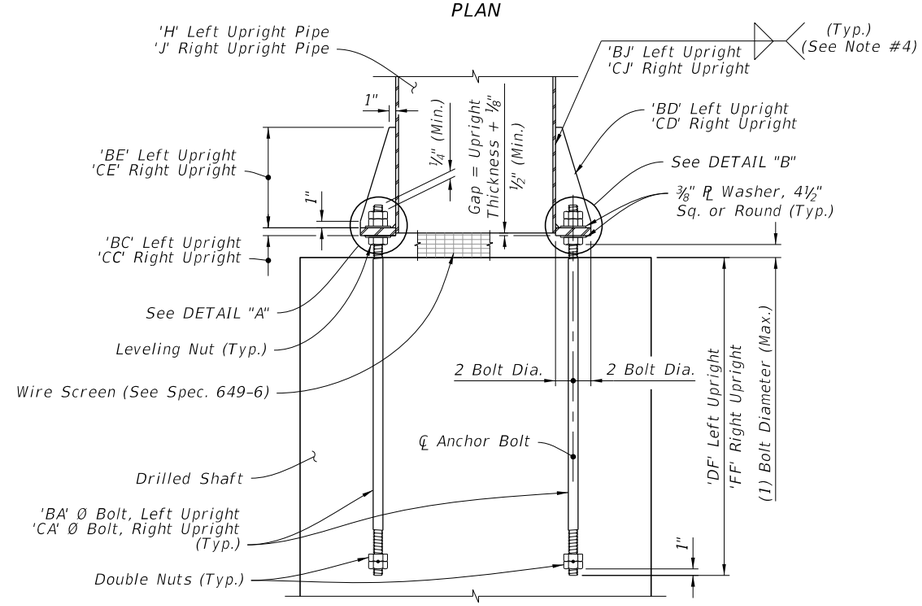

ELEVATION

BASE PLATE CONNECTION

NOTES:

1. See Traffic Plans for elevation at top of Foundation.
2. Install Drilled Shaft with a 2'-0" minimum from top elevation of the drill shaft to the finished grade, unless specified otherwise in the plans.
3. The shaft length is based on 2'-0" height above finished grade.
4. Wrap fillet weld around the stiffner termination on the tube wall (Typ).

10/14/2016 7:56:51 AM

LAST REVISION	REVISION	DESCRIPTION:	FY 2017-18 DESIGN STANDARDS	CANTILEVER SIGN STRUCTURE	INDEX NO.	SHEET NO.
11/01/16					11320	2 of 5

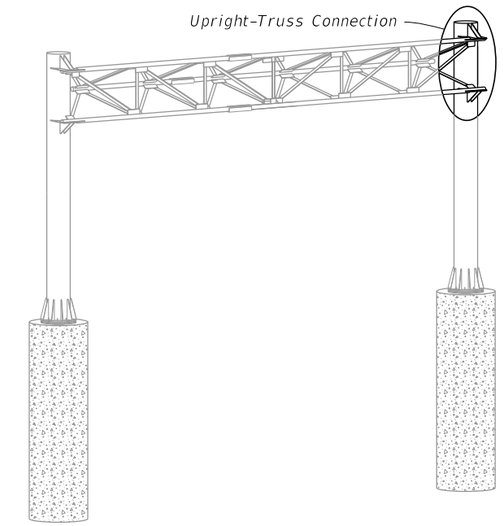

SPAN SIGN ASSEMBLY

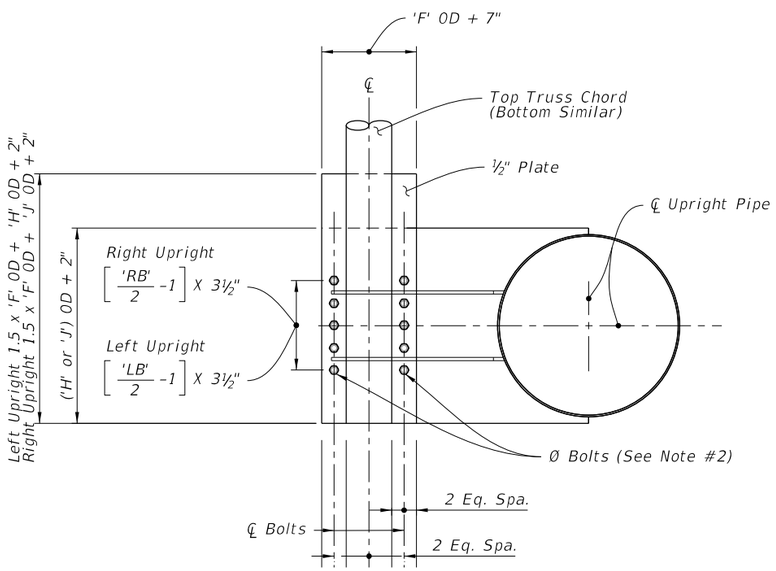

SECTION A-A

(With Gusset Plates And Web Angles Omitted For Clarity)

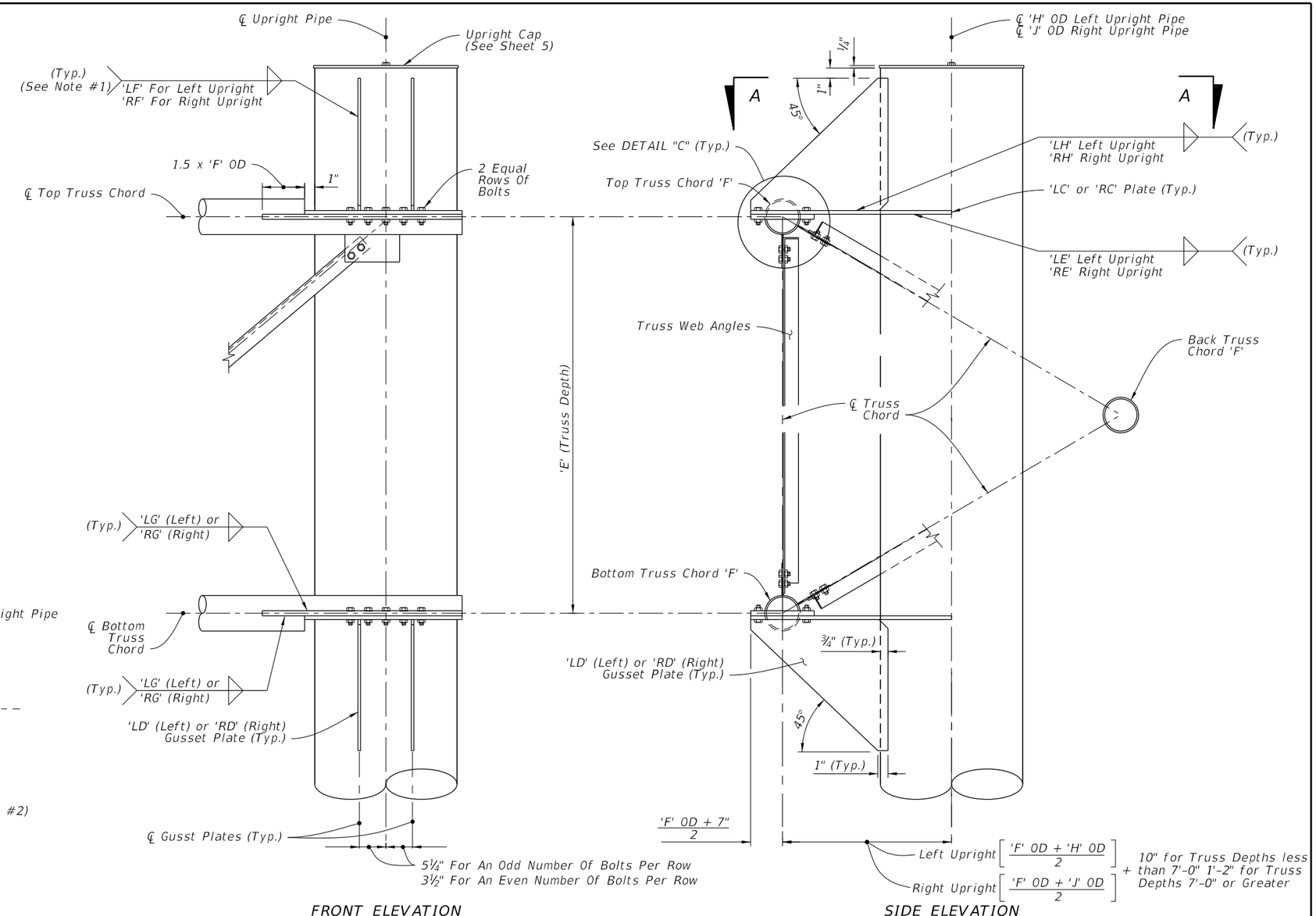

UPRIGHT-TRUSS CONNECTION DETAIL

(Web Members From Back Truss Chord Omitted For Clarity, See Note #3)

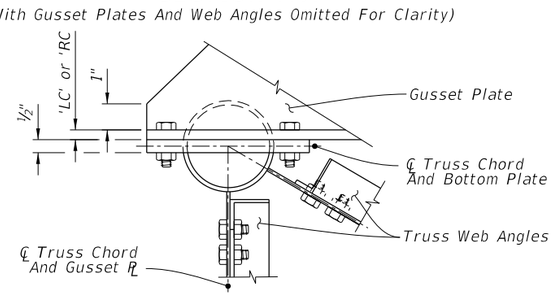

DETAIL "C"

NOTES:

1. Wrap fillet weld around the stiffner termination on the tube wall.
2. Truss Chord Bolts: 'LB' or 'RB' Hex Head Bolts 'LA' or RA' Ø.
3. Right Upright Truss connection shown, Left Upright Truss connection similar.

10/19/2016 3:03:16 PM

LAST REVISION	REVISION	DESCRIPTION:			INDEX NO.	SHEET NO.
11/01/16			FY 2017-18 DESIGN STANDARDS	SPAN SIGN STRUCTURE	11320	3 of 5

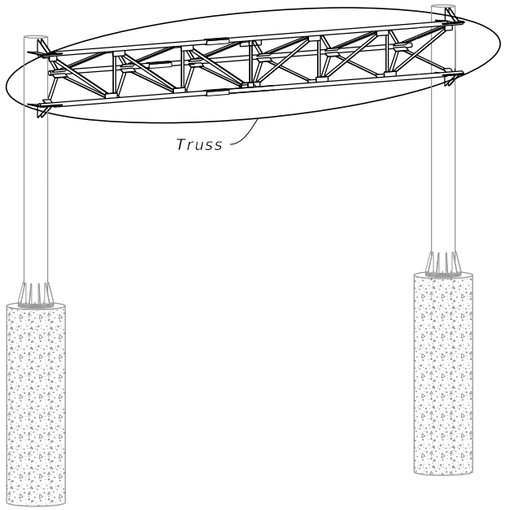

SPAN SIGN ASSEMBLY

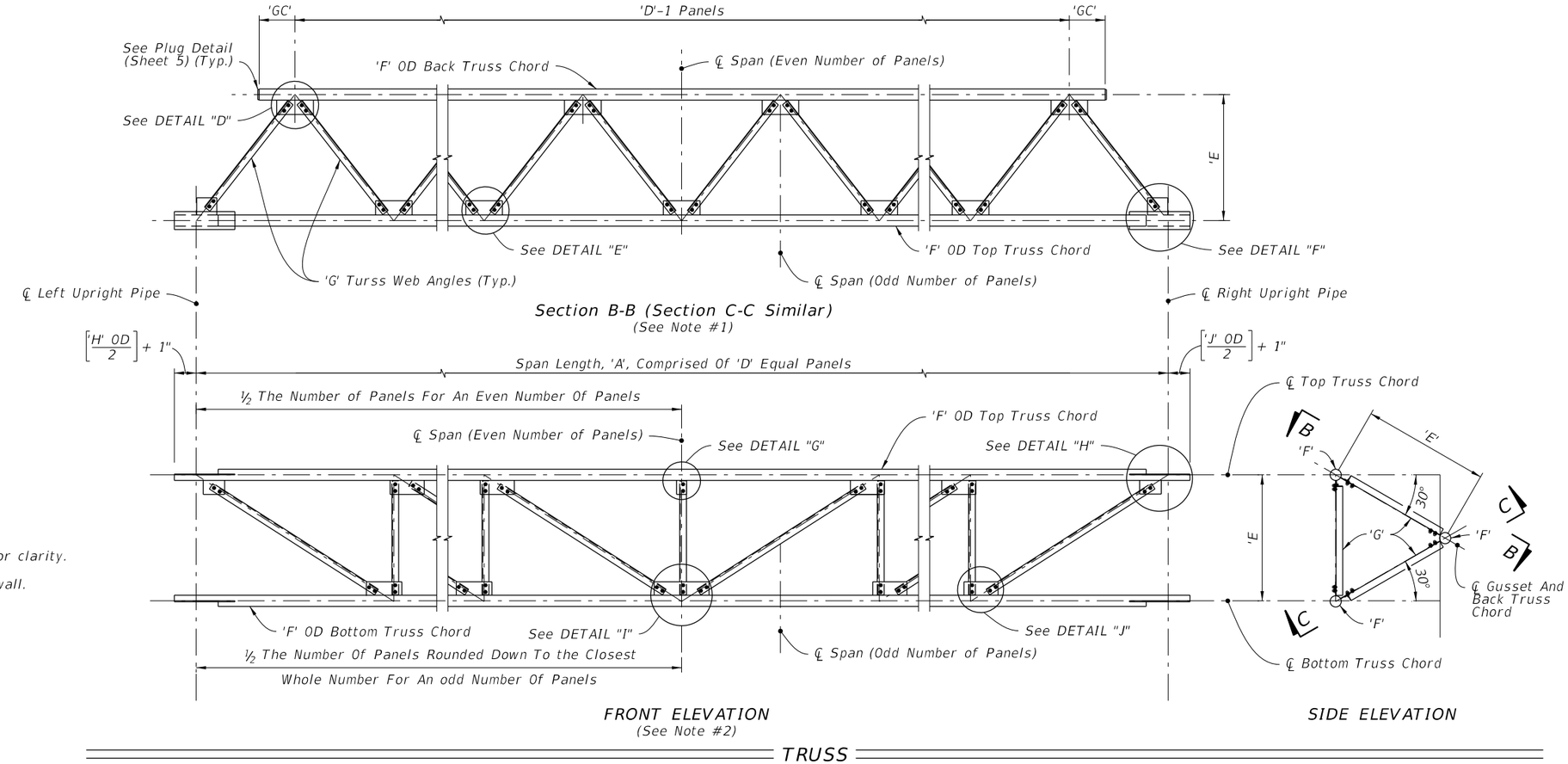

TRUSS

NOTES:

1. Out-of-plane members are not shown for clarity.
2. Back truss chord and attached angles are not shown for clarity.
3. Wrap fillet weld around plate termination on the tube wall.

Bolt Diameter (in.)	Distance (in.)	
	EA	EB
1¼	4⅜	2¼"
1	3½	1¾
⅞	3	1½
¾	2½	1¼
⅝	2¼	1⅛

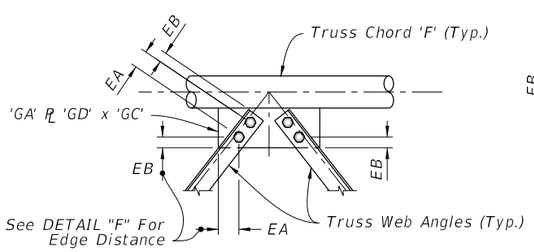

DETAIL "D"

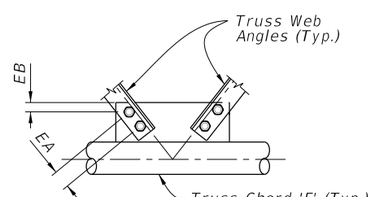

DETAIL "E"

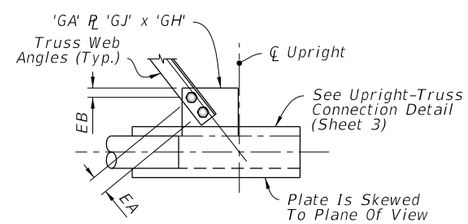

DETAIL "F"

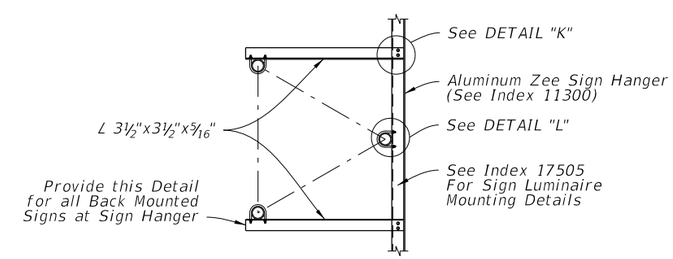

BACK-SIDE SIGN MOUNTING

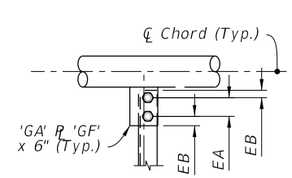

DETAIL "G"

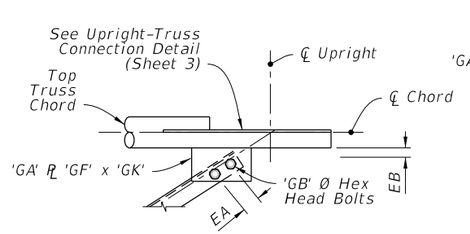

DETAIL "H"

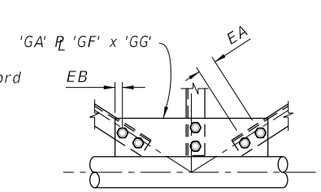

DETAIL "I"

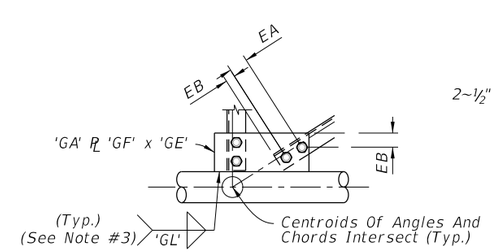

DETAIL "J"

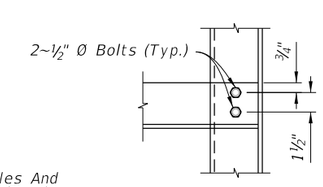

DETAIL "K"

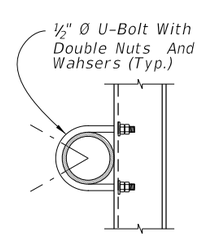

DETAIL "L"

10/14/2016 7:56:56 AM

LAST REVISION	REVISION	DESCRIPTION:			INDEX NO.	SHEET NO.
11/01/16			FDOT FY 2017-18 DESIGN STANDARDS	SPAN SIGN STRUCTURE	11320	4 of 5

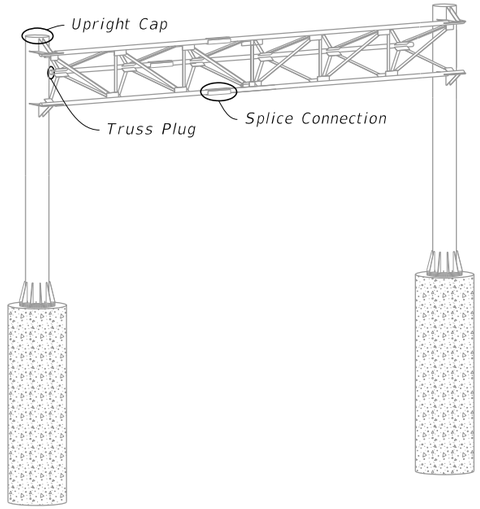

SPAN SIGN ASSEMBLY

Bolt Diameter (in.)	Distance (in.)	
	A	B
1	1¾	3½
⅞	1½	3
¾	1¼	2½

SPLICE CONNECTION NOTE:

1. Only 6 bolts are shown in detail for clarity. (One Half Each End Of Splice)

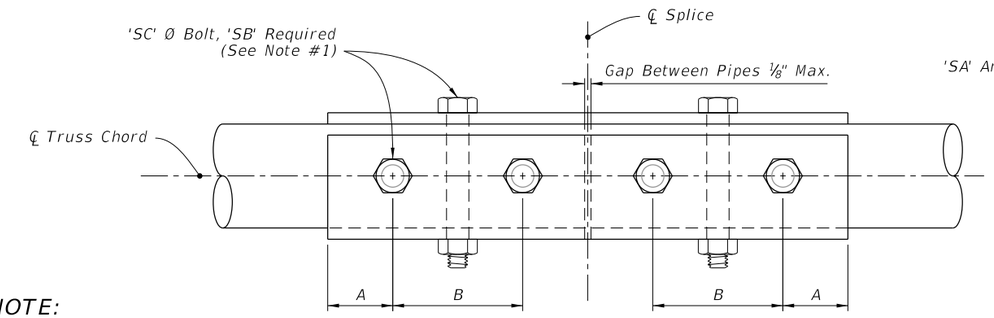

FRONT ELEVATION

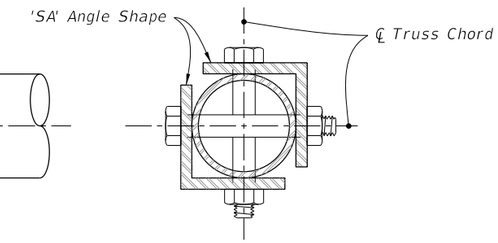

SIDE ELEVATION

SPLICE CONNECTION DETAIL

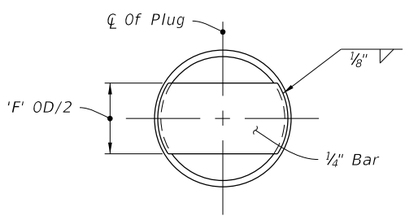

(Each End Of Back Truss Chord)

TRUSS PLUG DETAIL

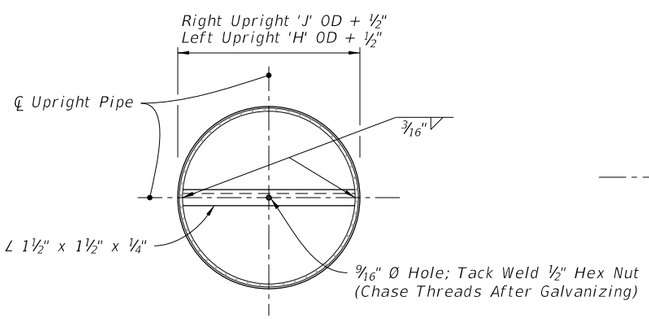

PLAN

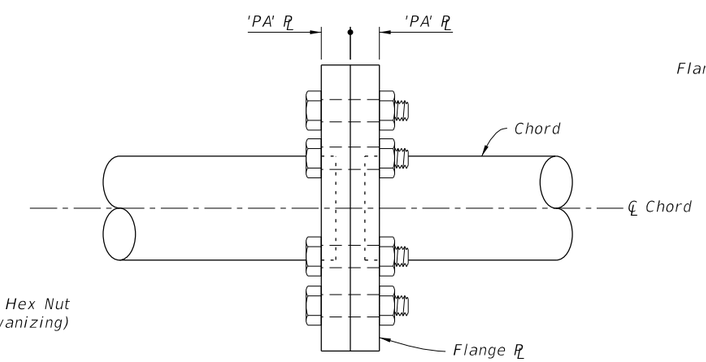

FRONT ELEVATION

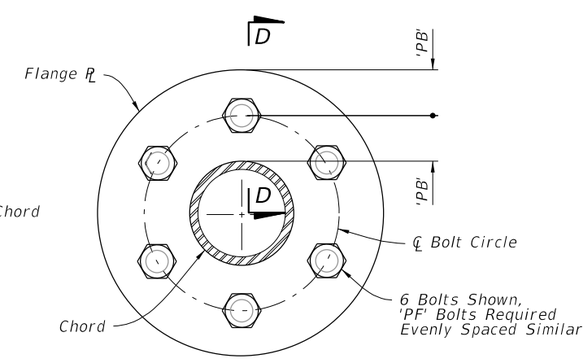

SIDE ELEVATION

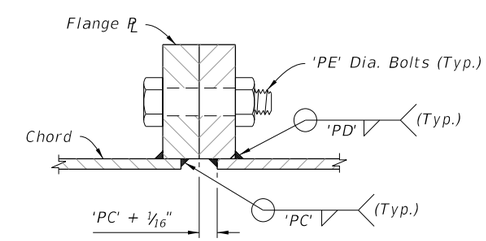

SECTION D-D

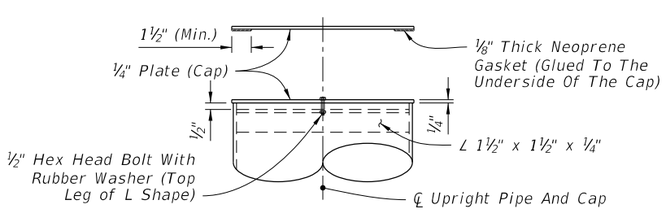

ELEVATION

UPRIGHT CAP DETAIL

ALTERNATE SPLICE CONNECTION DETAIL

3:03:20 PM

10/19/2016

LAST REVISION	REVISION	DESCRIPTION:			INDEX NO.	SHEET NO.
11/01/16			FDOT FY 2017-18 DESIGN STANDARDS	SPAN SIGN STRUCTURE	11320	5 of 5