GENERAL NOTES:

1. Verify Column lengths in the field prior to fabrication.

2. Shop drawings:

A. Column/Sign Posts: Sign Support Shop drawings are not required when fabricated in accordance with this Index and support posts do not exceed the length shown in the plans by more than 2'-0".

B. Sign Panels: Horizontal panel splices are allowed at interior wind beams for sign panels with a depth ("D") greater than 10 feet. Shop drawings required for panel splice details.

C. When shop drawings are required; obtain approval prior to fabrication.

3. Materials:

A. Sign Panel Mounting Materials:
   a. Aluminum Bars, and Extruded Shapes: ASTM B221, Alloy 6061-T6 or Alloy 6351-T5
   b. Aluminum Structural Shapes: ASTM B308, Alloy 6061-T6
B. Sign Support Structure Materials:
   a. Steel Plates and Structural Shapes: ASTM A36 or ASTM A709, Grade 36
   b. Steel Weld Metal: E70XX
   c. Brass Shims: ASTM B36
C. Aluminum Bolts, Nuts and Washers:
   a. Flat Head Machine Screws and Button Head Bolts: ASTM F 468, Alloy 2024-T4
   b. Hex Nuts: ASTM F467, 2024-T4
   c. Washers: ASTM B221, Alloy 7075-T6
D. Stainless Steel Bolts, Nuts and Washers Alloy Group 2, Condition A, may be substituted for the Aluminum bolts and screws as follows:
   a. Bolts: ASTM F593, CW1 or SH1
   b. Nuts: ASTM F594,
E. High Strength (H.S.) Steel Bolts, Nuts and Washers:
   a. Galvanized Hex Head Bolts: ASTM F3125, Grade A325, Type 1
   b. Galvanized Nuts: ASTM A563 Hex, Grade DH
   c. Galvanized Washers: ASTM F436
F. Concrete: Class I.
G. Reinforcing Bars or Welded Wire Reinforcement (WWR): Specification Section 415

4. Coatings:

A. Aluminum Fasteners: Anodic coating (0.0002 inches min.) and chromate sealed
B. Galvanize High Strength Steel Bolts Nuts and Washers: ASTM F2329
C. Galvanize all other steel items (excluding stainless steel): Hot-dip ASTM A123
D. Treat damaged galvanizing in accordance with Specification Section 562

5. Fabrication:

A. All Base Connections and Stub Column materials are steel unless otherwise specified.
B. Drill or sub-punch and ream holes in Fuse Plates and Hinge Plates
C. Weld Base Plate to Post & Stub or if using the Alternate Connection Detail weld Base Plate and Stiffeners to Post and Stub (Sheet 2)
D. Hot dip galvanize after fabrication; Remove all drips, runs or beads on base plate within washer contact areas (Including saw cuts)

6. Construction:

A. Install the Sign Structure foundation in accordance with Specification Section 455. Orient Stub Post according to direction of traffic (Sheet 2)
B. Tighten all high strength bolts except Base Bolts in accordance with Specification Section 700.
C. Assemble Post to Stub with Base Bolts and three flat washers per bolt (See Base Connection Details, Sheet 2). Tighten Base Bolts in accordance with Instructions Notes on Sheet 2.

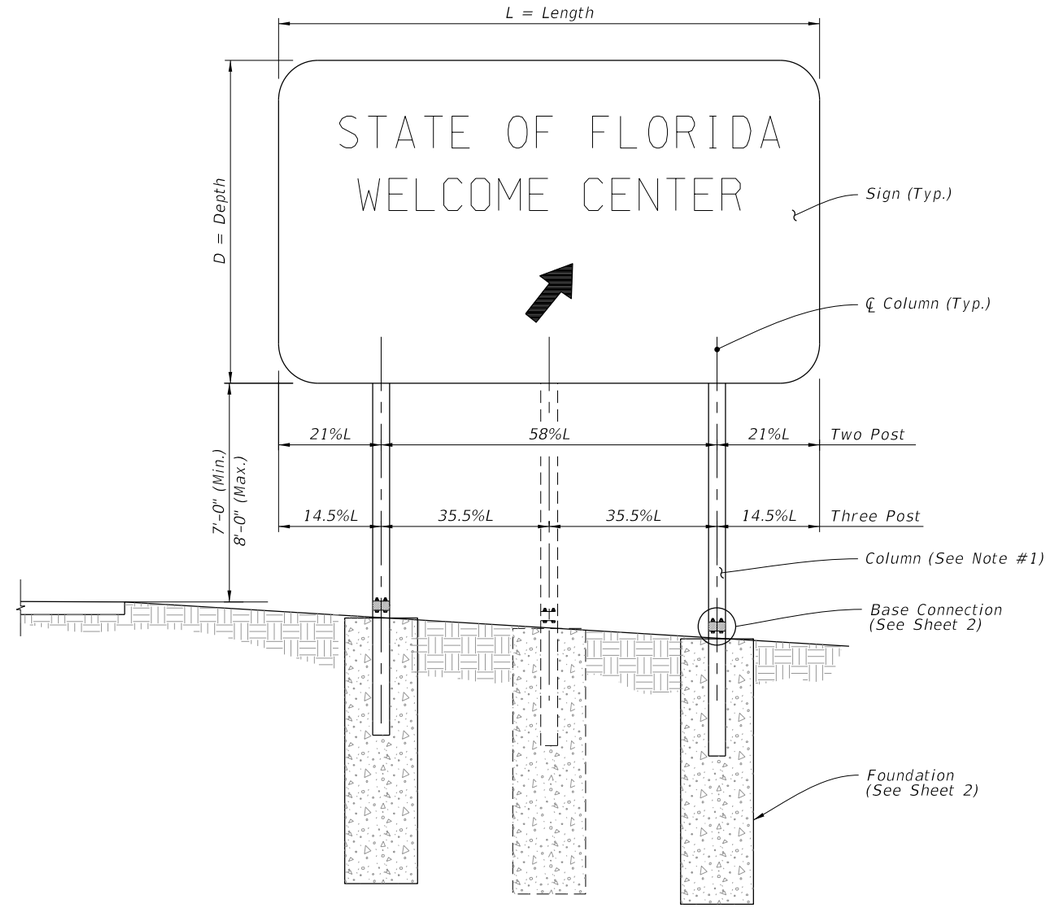

FRONT ELEVATION

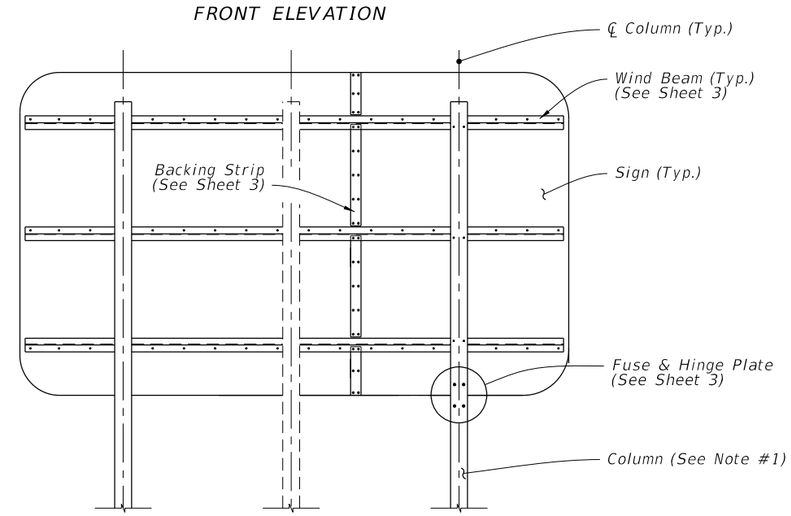

BACK ELEVATION

MULTI-COLUMN SIGN ASSEMBLY

10/14/2016 7:54:59 AM

LAST REVISION	REVISION	DESCRIPTION:	FY 2017-18 DESIGN STANDARDS	MULTI-COLUMN GROUND SIGN	INDEX NO.	SHEET NO.
11/01/16					11200	1 of 3

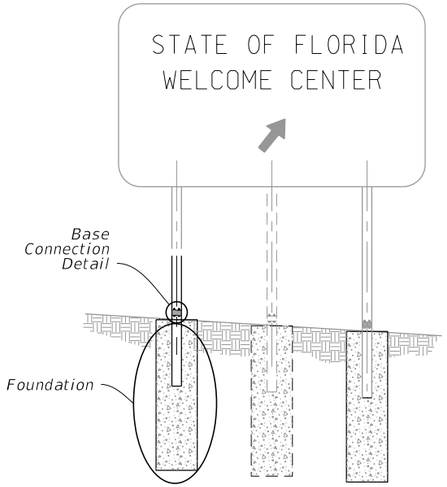

MULTI-COLUMN SIGN ASSEMBLY

FOUNDATION DATA				
Post & Stub Section*	Dia.	Depth	Stub Column Length	Reinf. Bars V
S 3x5.7	2'-0"	4'-0"	3'-0"	10-#6
W 6x12	2'-0"	6'-0"	3'-0"	10-#6
W 8x18	2'-4"	7'-6"	4'-0"	8-#8
W 8x24	2'-4"	8'-6"	4'-0"	8-#8
W 10x33	2'-4"	10'-3"	4'-0"	8-#8
W 12x45	2'-8"	11'-3"	5'-0"	10-#8

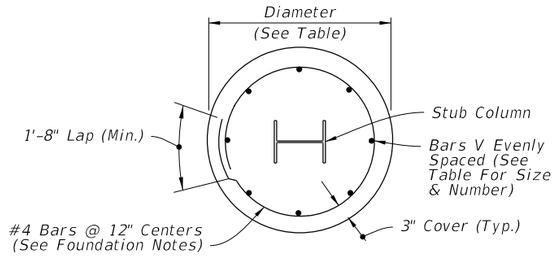

PLAN

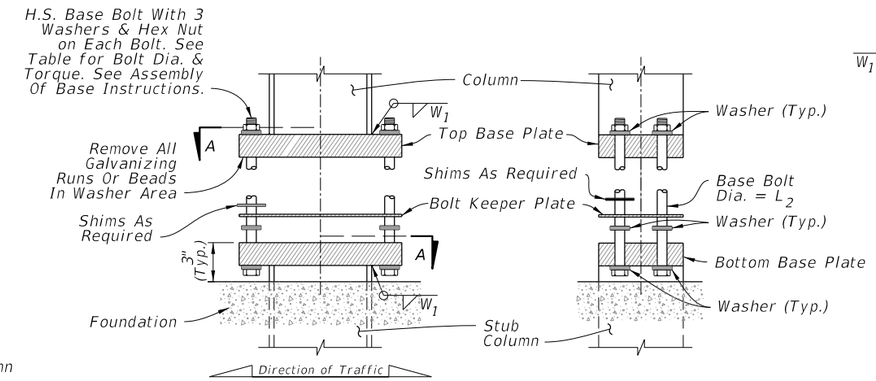

SIDE ELEVATION

FRONT ELEVATION

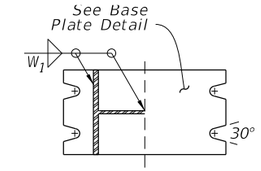

SECTION A-A

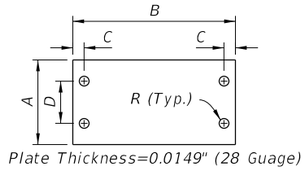

BOLT KEEPER PLATE DETAIL

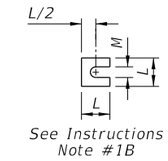

SHIM DETAIL
(Brass)

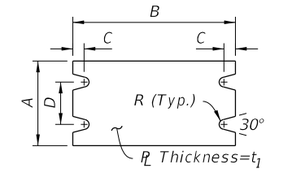

BASE PLATE DETAIL

	BASE CONNECTION DATA									SHIM	
Post & Stub Section*	A	B	C	D	R	t_1	L_2	W_1	Torque (lbf*in)	L	M
S 3x5.7	4"	7"	3/4"	2"	5/16"	1"	1/2"	1/4"	90 ± 20	1-1/4"	9/16"
W 6x12	4"	10"	3/4"	2"	3/8"	1-5/8"	5/8"	1/4"	270 ± 45	1-3/8"	11/16"
W 8x18	5-1/4"	12-1/2"	7/8"	2-3/4"	7/16"	1-3/4"	3/4"	3/8"	445 ± 75	1-3/4"	13/16"
W 8x24	6-1/2"	12-1/2"	7/8"	3-1/4"	7/16"	1-3/4"	3/4"	3/8"	445 ± 75	2-1/8"	13/16"
W 10x33	8"	16"	1-1/4"	4-3/4"	9/16"	2"	1"	1/2"	580 ± 90	2-3/8"	1-1/16"
W 12x45	10"	18"	1-1/4"	6"	9/16"	2"	1"	1/2"	580 ± 90	2-3/4"	1-1/16"

* Designations: (Normal Depth in inches) x (weight in pounds per linear foot).

BASE CONNECTION

FOUNDATION NOTES:

The Contractor may use Welded Wire Reinforcement (WWR) for foundation reinforcing.

At the Contractors option, the #4 tie bars at 12" o.c. may be replaced by D10 Spiral Wire @ 6" pitch, with three flat turns at the top and one flat turn at the bottom in accordance with Specification Section 415.

INSTRUCTIONS NOTES:

1. Assembly of Base Instructions:

   A. Place one washer on each Base Bolt between the Bottom Base Plate and the head of high strength Base Bolt; place the next washer between the Bottom Base Plate and the Bolt Keeper Plate; add the Top Base Plate section and place the third washer between the Top Base Plate and the Nut.

   B. Shim as required to plumb column. Provide 2-0.0149" thick (28 gauge) and 2-0.0329" thick (21 gauge) brass shims per column.

2. H.S. Base Bolt L_2 Tightening Instructions:

   A. Tighten Base Bolts to the maximum possible with a 12" to 15" wrench (this will bed the washers and shims and clear the bolt threads).

   B. Loosen each Base Bolt one turn.

   C. Under the supervision of the Engineer, use a calibrated wrench to tighten bolts to the torque prescribed in the Table. Over tightened Base Bolts will not be permitted.

   D. Burr threads at junction with nut to prevent nut loosening. Treat damaged galvanizing.

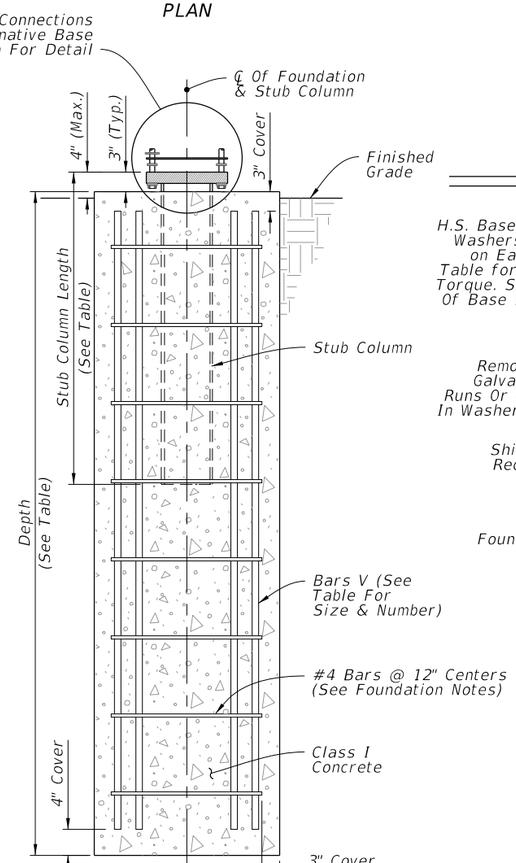

ELEVATION

FOUNDATION

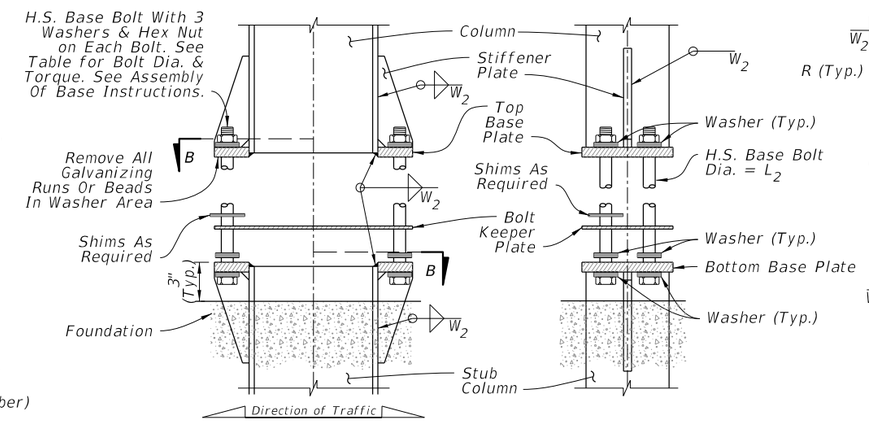

SIDE ELEVATION

FRONT ELEVATION

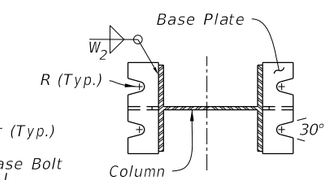

SECTION B-B

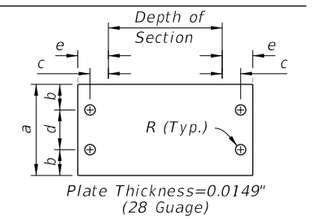

BOLT KEEPER PLATE DETAIL

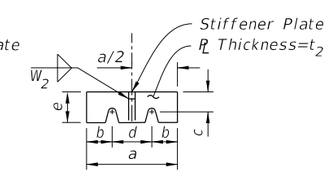

BASE PLATE DETAIL

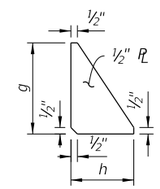

STIFFENER PLATE DETAIL

ALTERNATIVE BASE CONNECTION DATA												
Section*	a	b	c	d	e	t_2	L_2	R	Torque (lbf*in)	g	h	W_2
W 6x12	4-3/4"	1-1/8"	1-3/16"	2-1/2"	2"	1/2"	5/8"	3/8"	270±45	5-1/8"	2"	1/4"
W 8x18	5-3/4"	1-1/2"	1-3/8"	2-3/4"	2-3/16"	5/8"	3/4"	7/16"	445±75	6-1/4"	2-3/16"	1/4"
W 8x24	7"	1-3/4"	1-3/8"	3-1/2"	2-3/8"	3/4"	3/4"	7/16"	445±75	8"	2-3/8"	5/16"
W 10x33	8"	2"	1-9/16"	4"	2-3/4"	3/4"	1"	9/16"	580±90	8"	2-3/4"	5/16"
W 12x45	8"	2"	1-9/16"	4"	3"	3/4"	1"	9/16"	580±90	8"	3"	5/16"

* Designations: (Normal Depth in inches) x (weight in pounds per linear foot).

ALTERNATIVE BASE CONNECTION

FOUNDATION AND BASE CONNECTION DETAILS

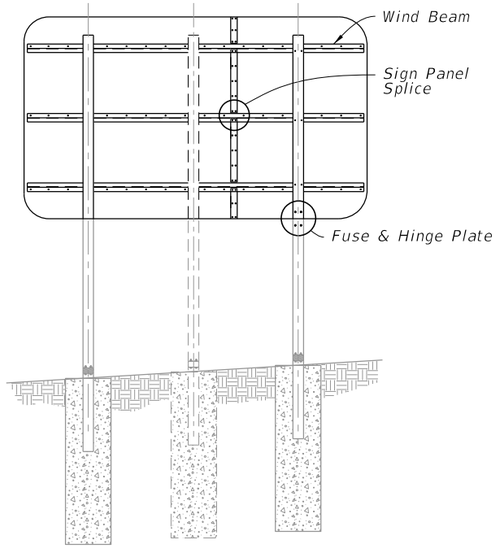

BACK ELEVATION

MULTI-COLUMN SIGN ASSEMBLY

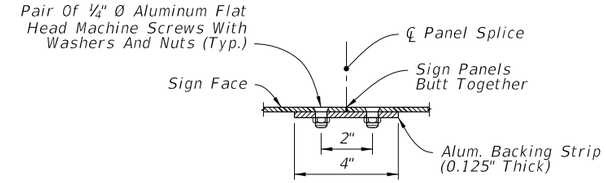

PLAN VIEW

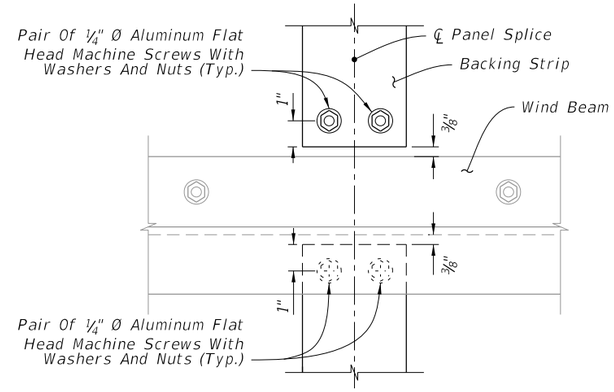

ELEVATION

SIGN PANEL SPLICE

FUSE (HINGE) PLATE DATA									
Section*	a	b	c	d	e	t_2	D_1	D_2	L_1
S 3x5.7	7-1/4"	2-3/8"	1-1/4"	1/2"	9/16"	3/8"	7/16"	9/16"	1/2"
W 6x12	7-1/4"	4"	1-1/4"	7/8"	15/16"	3/8"	13/16"	11/16"	5/8"
W 8x18	8-1/4"	5-1/4"	1-3/8"	1-1/8"	1-1/4"	3/8"	1"	13/16"	3/4"
W 8x24	8-1/4"	6-1/2"	1-3/8"	1-1/2"	1-1/2"	1/2"	1"	13/16"	3/4"
W 10x33	9-1/4"	8"	2"	1-3/4"	1-3/4"	5/8"	1-1/8"	1-1/16"	1"
W 12x45	11"	8"	2"	1-3/4"	1-3/4"	3/4"	1-5/16"	1-1/16"	1"

* Designations: Normal Depth in inches.

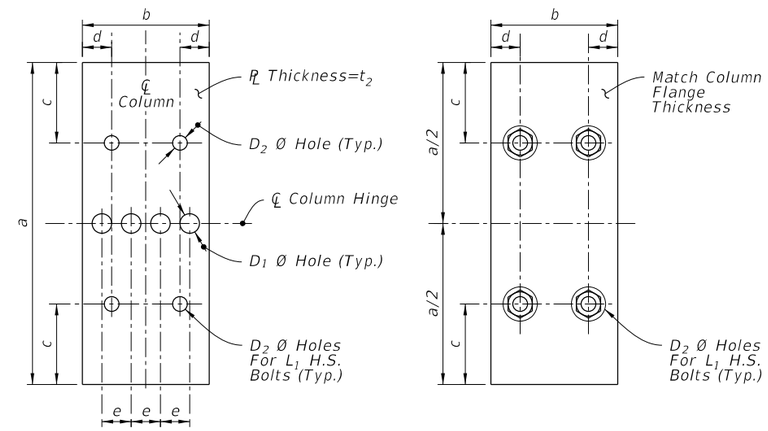

FUSE PLATE

HINGE PLATE

FUSE & HINGE PLATE

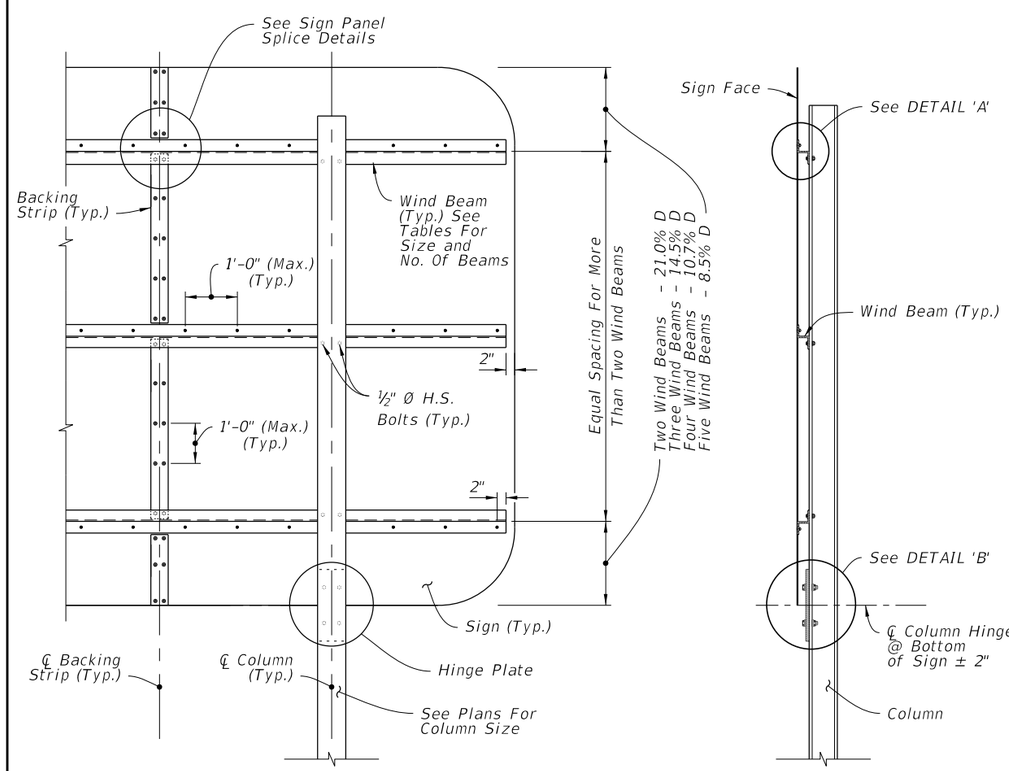

BACK ELEVATION

SIDE ELEVATION

MULTI-COLUMN SIGN BACK PANEL

NUMBER OF WIND BEAMS FOR GIVEN DEPTH	
No. Beams	Max. Depth
2	7'-0"
3	12'-0"
4	16'-4"
5	20'-8"

SIZE OF WIND BEAMS		
Size Of Zee**	Length Of Sign (Feet)	
	2 Posts	3 Posts
Zee 1¾" x 1¾" x 1.09	0 to 11'-0"	0 to 17'-4"
Zee 3 x 2 11/16" x 2.33	11'-1" to 19'-0"	17'-5" to 29'-6"
Zee 3 x 2 11/16" x 3.38	19'-1" to 31'-0"	29'-7" to 40'-0"

** Zee Beams are aluminum. No steel equivalent available
Designation gives (Member Depth) x (Flange Width) x (lb/ft)

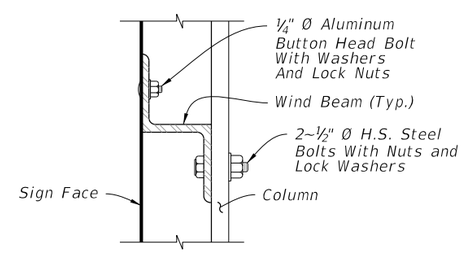

DETAIL 'A'

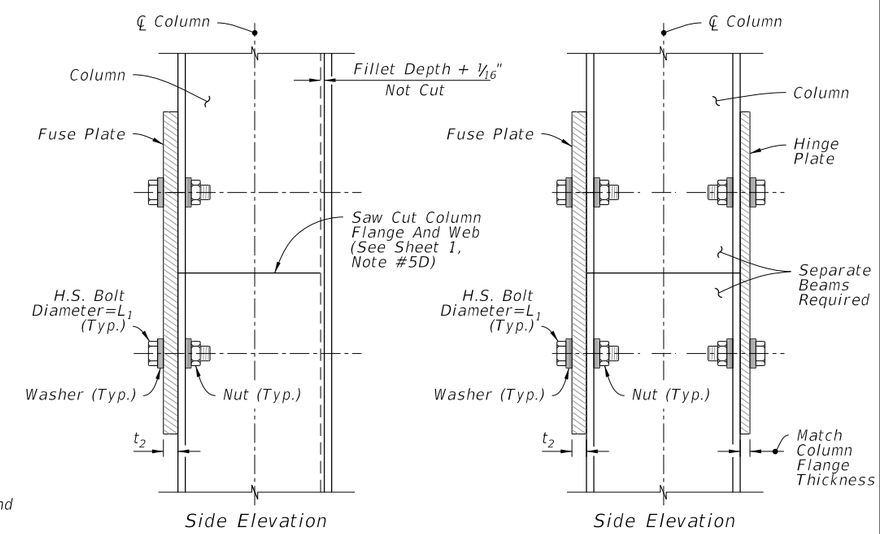

TYPICAL HINGE

OPTIONAL HINGE

(See Fabrication Notes on Sheet 1)

DETAIL 'B'

WIND BEAM, BACKING STRIP & FUSE/HINGE PLATE DETAILS

10/14/2016 7:55:05 AM

LAST REVISION	REVISION	DESCRIPTION:	FY 2017-18 DESIGN STANDARDS	MULTI-COLUMN GROUND SIGN	INDEX NO.	SHEET NO.
11/01/16			FDOT		11200	3 of 3