The Type K Temporary Concrete Barrier System has been crash tested to NCHRP Report 350 TL-3 criteria or structurally evaluated to meet the requirements of NCHRP Report 350 TL-3 criteria for the installation configurations as shown utilizing the types, sizes, lengths, shapes, strengths and grades of the fabrication and installation materials as shown.

In order to maintain crashworthiness of the system, do not substitute different grades, sizes, shapes or types of reinforcing steel for those shown for constructing Type K Barrier Units. Also, do not substitute different type, size, length or material grade anchor bolts, nuts, washers, adhesives, connector pins, stakes, keeper pins, or guardrail components for installing Type K Barrier Units.

FABRICATION NOTES:

FABRICATOR PREQUALIFICATION: The Barrier Units shall be made in a prestressed concrete plant that meets the requirements of Specification Section 450 or in a precast plant meeting the requirements of Specification Section 105.

CONCRETE: Concrete shall be Class IV in accordance with Specification Section 346. Specification Sections 346-10.2 through 346-10.4 are not applicable. Barrier Units represented by concrete acceptance strength tests which fall below 5000 psi will be rejected.

REINFORCING STEEL: All reinforcing steel shall be ASTM A 615, Grade 60 except for Bars 6D1, 6D2 and 6D3. Bars 6D1, 6D2 and 6D3 shall be ASTM A 706 except that a 2¾" diameter pin must be used for the 180 degree bend test. After fabrication, all or part of Bars 6D shall be hot dip galvanized in accordance with Specification Section 962 or coated with a cold galvanizing compound in accordance with Specification Section 562. The minimum limit of galvanizing or coating is shown in the Bending Diagrams. At the Fabricator's option, the entire length of Bars 6D may be galvanized or coated. Install Bars 6D within ⅛" of the plan dimensions. Correct placement of Bars 6D is critical for proper fit up and performance of individual Barrier Units.

At the option of the Fabricator, Deformed Welded Wire Fabric in accordance with Specification Section 931 and the details shown on Sheet 2 may be utilized in lieu of Bars 4A and 5B.

All dimensions in the Bending Diagrams are out to out. All reinforcing steel shall have a 2" minimum cover except as noted.

LIFTING SLEEVE ASSEMBLY: Inclusion of the Lifting Sleeve Assemblies is optional. Steel for Pipe Sleeve shall be in accordance with ASTM A 53. Hot-dip galvanize the Lifting Sleeve Assemblies after their fabrication in accordance with the Specifications.

SURFACE FINISH: Construct Barrier Units in accordance with Specification Sections 400 and 521. Finish the top and sides of the Barrier Units with a General Surface Finish. Finish the bottom of the Barrier Units to a dense uniform surface by floating in lieu of the General Surface Finish. Use stationary metal forms or stationary timber forms with a form liner.

MARKING: Permanently mark the top left end of each Barrier Unit by the use of an embedded and anchored metallic plate with letters and figures a minimum of 0.5" tall. Ink stamps are not allowed. Permanently mark with the following information:

- Type K1
- Fabricator's name or symbol
- Date of manufacture (day, month and year)

HANDLING: At no time shall the Barrier Units be lifted or moved by use of Bars 6D that extend from the ends of the units. Approximate weight of one unit equals 2.7 tons.

Alternate Designs: Manufacturers/vendors seeking approval of proprietary Temporary Barrier Systems for inclusion on the Approved Products List (APL) as alternative designs shall submit a Product Application package. The application package shall include manufacturer's product drawings, specifications, installation manual, National Cooperative Highway Research Program (NCHRP) Report 350 or Manual for Assessing Safety Hardware (MASH) Test Level 3 (TL-3) crash test documentation and the FHWA "Letter of Acceptance." The posted APL drawings will need to include the following:

1. Anchorage, bolting, and staking details for connections to asphalt and concrete pavement.
2. Sections and tables showing required deflection space and minimum offsets to above ground hazards or drop-offs.
3. Alignment and length of need details.
4. Transition and overlap details.
5. End treatment details.

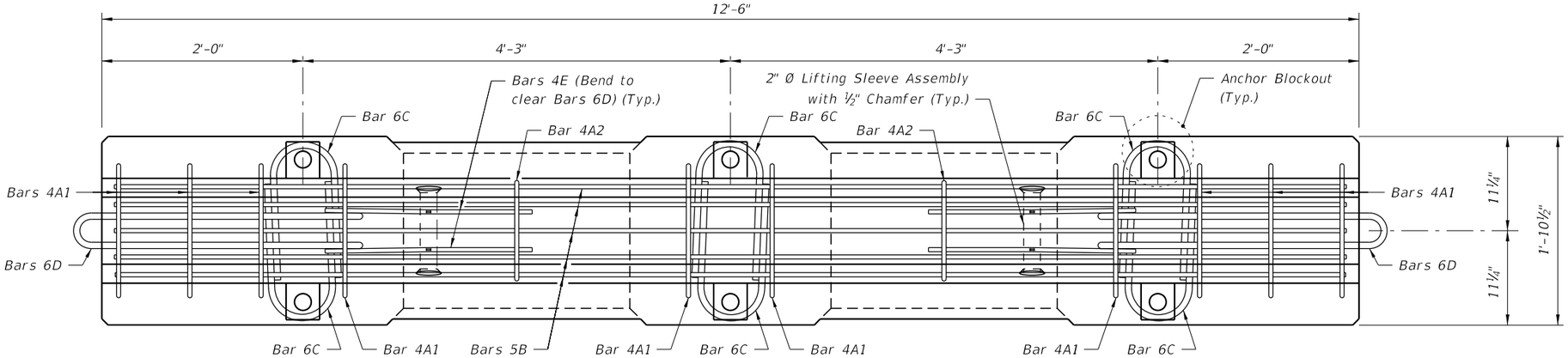

PLAN VIEW

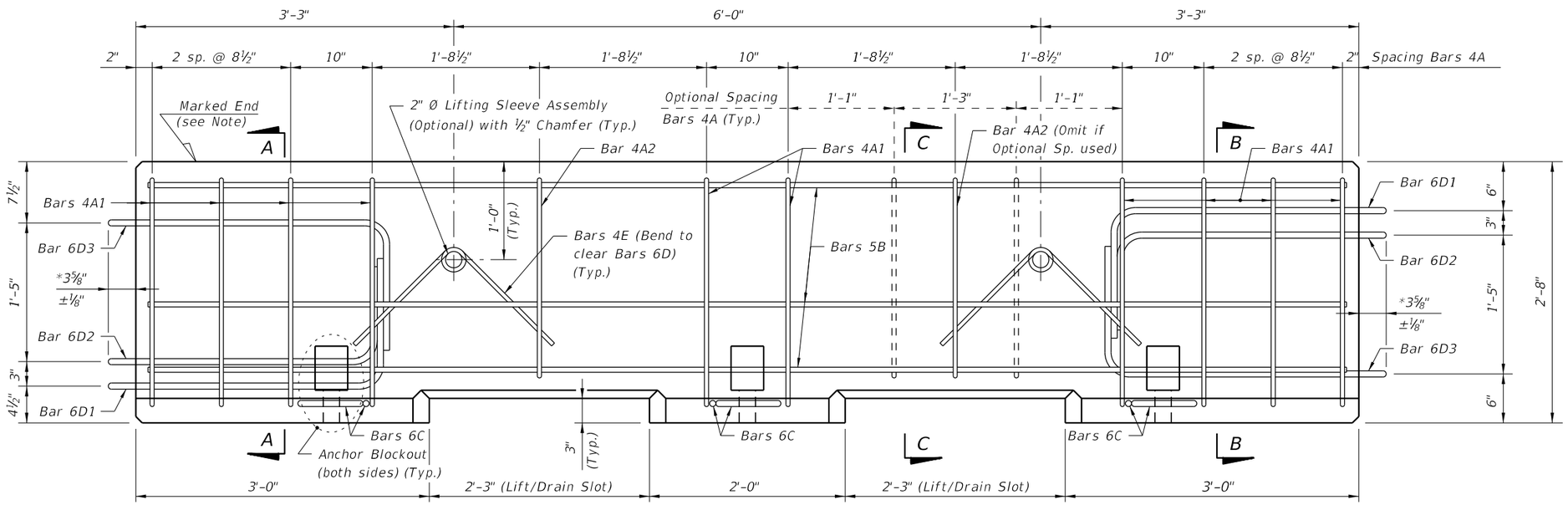

ELEVATION VIEW

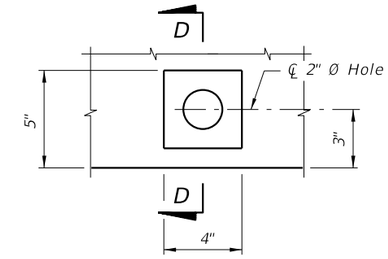

ANCHOR BLOCKOUT DETAIL

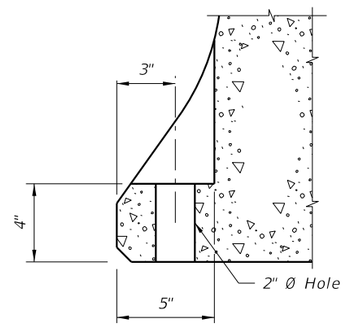

SECTION D-D
(Reinforcement not shown for clarity)

* Measured from end of Barrier Unit to outside edge of Bars 6D.

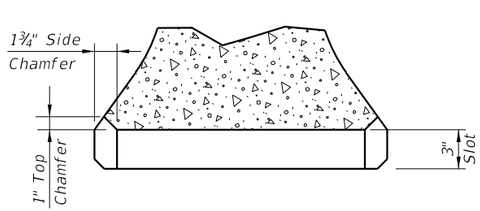

SECTION THRU LIFT/DRAIN SLOT

ESTIMATED TEMPORARY CONCRETE BARRIER QUANTITIES		
ITEM	UNIT	QUANTITY
Concrete	CY	1.29
Reinforcing Steel	LB	218

The above quantities are for one Barrier Unit.

Cross References:
For Section A-A, Section B-B and Section C-C see Sheet 3.

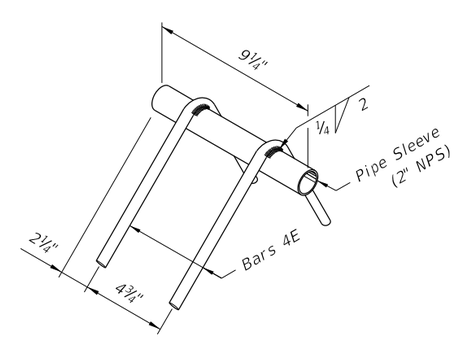

LIFTING SLEEVE ASSEMBLY DETAIL (OPTIONAL)

10/24/2016 9:40:08 AM

LAST REVISION	REVISION	DESCRIPTION:	FY 2017-18 DESIGN STANDARDS	TYPE K TEMPORARY CONCRETE BARRIER SYSTEM	INDEX NO.	SHEET NO.
07/01/07					414	2 of 15

ALTERNATE REINFORCING STEEL DETAIL
WELDED WIRE REINFORCEMENT

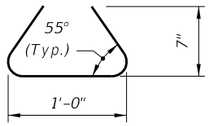

NO. 4 DRAIN BAR OVER DRAIN SLOTS (CONVENTIONAL STEEL)

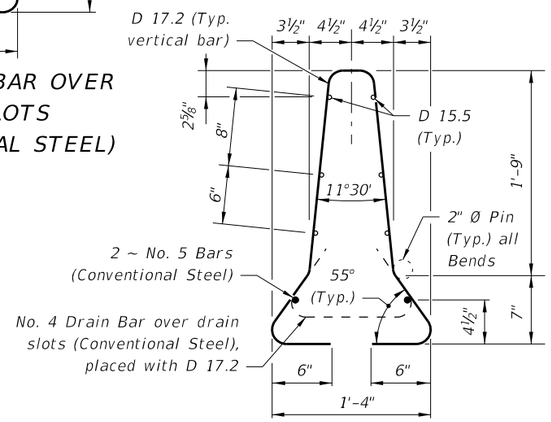

NOTES:
Place 2 ~ No. 5 Bars (12'-3" long) in bottom of Welded Wire Reinforcement cage as shown.
D 17.2 spacing shall match spacings for Bars 4A shown in Elevation View, Sheet 2. Field trim D 17.2 to clear drain slots by 2".

CONFIGURATION ONE

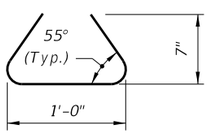

NO. 4 DRAIN BAR OVER DRAIN SLOTS (CONVENTIONAL STEEL)

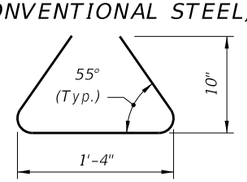

NO. 4 TYPICAL BAR (CONVENTIONAL STEEL)

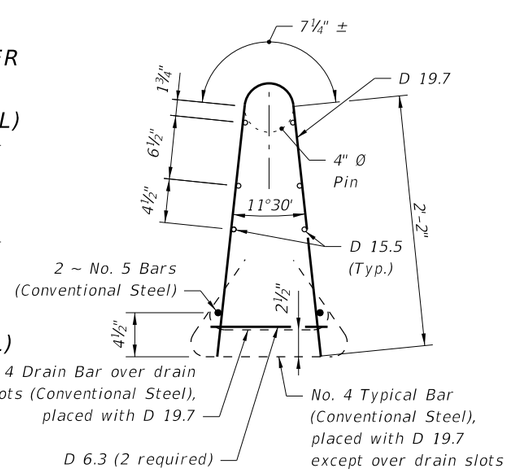

NOTES:
Place 2 ~ No. 5 Bars (12'-3" long) tied to D 19.7 inside of bottom Welded Wire Reinforcement cage as shown.
D 19.7 spacing shall match spacings for Bars 4A shown in Elevation View, Sheet 2. Field trim D 19.7 to clear drain slots by 2".

CONFIGURATION TWO

CONVENTIONAL REINFORCING STEEL BENDING DIAGRAMS

BILL OF REINFORCING STEEL

MARK	SIZE	NUMBER	LENGTH
A1	4	10	6'-1"
A2	4	2	5'-5"
B	5	5	12'-3" (Straight)
C	6	6	3'-1"
D1	6	2	8'-4"
D2	6	2	7'-6"
D3	6	2	8'-6"
E	4	4	2'-0"

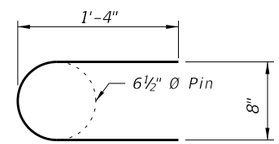

BAR 6C

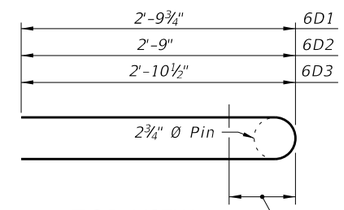

TOP VIEW
BARS 6D1, 6D2 & 6D3

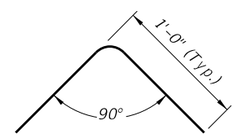

BAR 4E

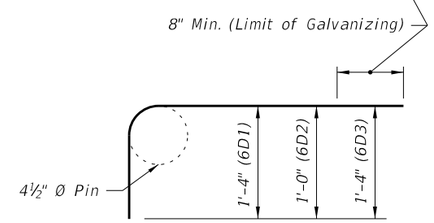

SIDE VIEW
BARS 6D1, 6D2 & 6D3

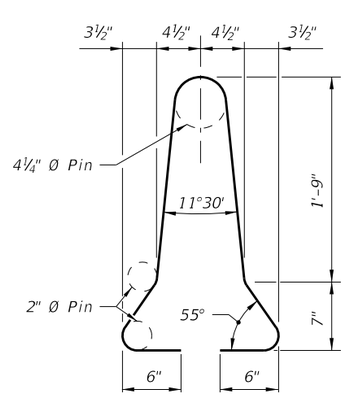

STIRRUP BAR 4A1

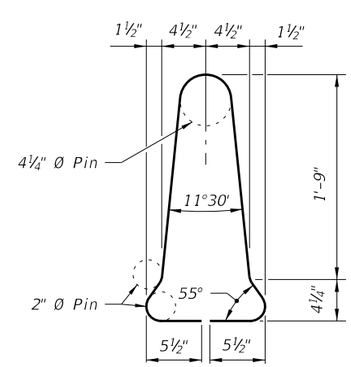

STIRRUP BAR 4A2

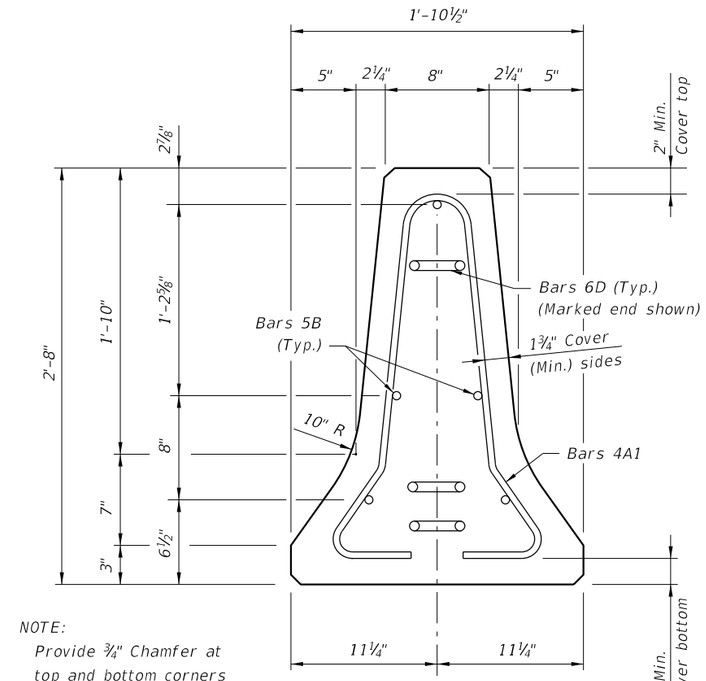

NOTE:
Provide ¾" Chamfer at top and bottom corners of Barrier.

SECTION A-A (SHOWN)
(SECTION B-B SIMILAR)

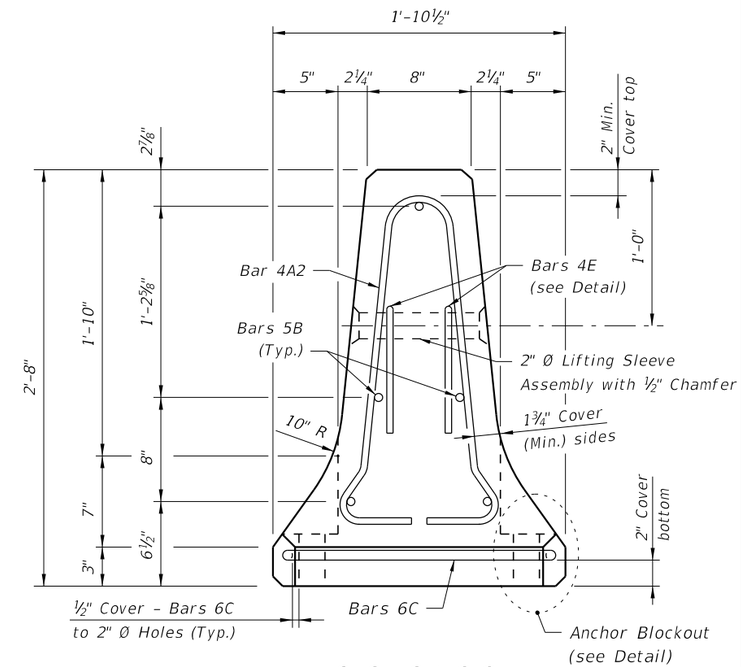

SECTION C-C
(Bars 6D not shown for clarity)

10/24/2016 9:40:10 AM

LAST REVISION	REVISION	DESCRIPTION:	FY 2017-18 DESIGN STANDARDS	TYPE K TEMPORARY CONCRETE BARRIER SYSTEM	INDEX NO.	SHEET NO.
07/01/14					414	3 of 15

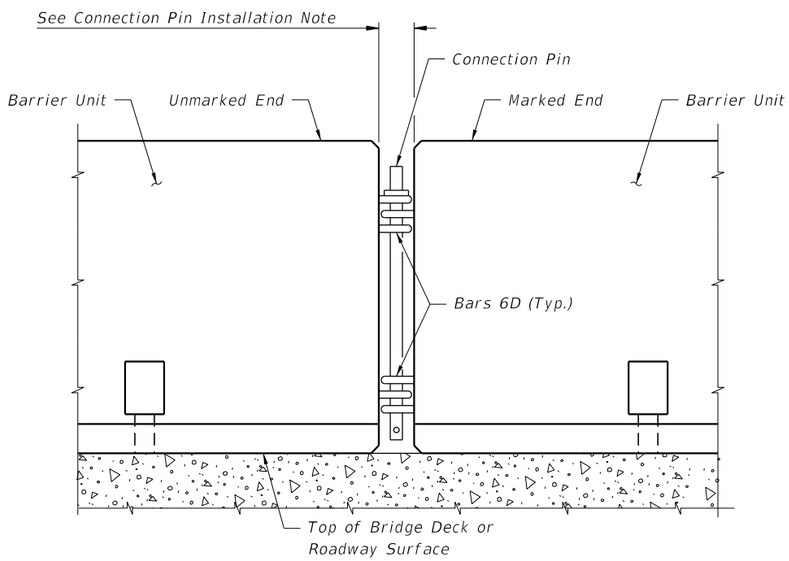

DETAIL OF CONNECTION BETWEEN BARRIER UNITS

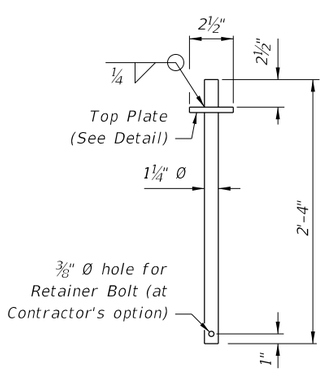

CONNECTION PIN DETAIL

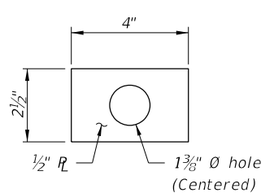

TOP PLATE DETAIL

NOTES FOR ALL INSTALLATIONS:

1. LIMITATION OF USE: This Temporary Concrete Barrier System is intended for work zone traffic control and other temporary applications. It shall not be used for permanent traffic railing construction unless specifically permitted by the Plans. Except as shown for the Back Filled Roadway Installations, the Barrier Units must be installed on a flexible pavement (asphalt) or rigid pavement (concrete) surface as shown with a cross slope of 1:10 or flatter. Except as shown for transition installations, Type K Barrier Units are not intended to be bolted down or staked down in locations where they can be impacted from the back side.

2. HANDLING: At no time shall the Barrier Units be lifted or moved by use of Bars 6D that extend from the ends of the units. Approximate weight of one unit equals 2.7 tons.

3. ASPHALT PAD: Where existing flexible pavement is not present, construct a minimum 2" thick temporary Asphalt Pad using Miscellaneous Asphalt Pavement in accordance with Specification Section 339 with the exception that the use of a pre-emergent herbicide is not required. No separate payment will be made for the Asphalt Pad.

4. SURFACE PREPARATION: Except as shown for the Back Filled Roadway Installations, remove all grass, debris, loose dirt and sand from the pavement, bridge deck or Asphalt Pad surface within the barrier footprint just prior to placement of the Barrier Units.

5. OFFSET TO TRAVELWAY: Offset shall meet requirements as shown on sheet 1 of Index 415.

6. CONNECTION PIN ASSEMBLY: Steel for Connection Pin and Top Plate assemblies shall be in accordance with ASTM A36 or ASTM A709 Grade 36. Nondestructive testing of welds shall not be required. At the Contractor's option, a ⅜" diameter hole may be provided at the bottom of the Connection Pin, as shown, for the installation of a vandal resistance bolt.

7. CONNECTION PIN INSTALLATION: Initially set Barrier Units by using a 3⅝" wooden block between ends of adjacent units. Install Connection Pin between adjacent Barrier Units as shown, then pull newly placed Barrier Unit away from adjacent Barrier Unit to remove slack between Connection Pin and Bars 6D (except as shown on Sheet 5). Barrier Units shall not be used unconnected.

8. DELINEATION: Mount Barrier Delineators on top of Barrier Units that are used as traffic barriers along travel ways in work zones. Space the Barrier Delineators at 50' centers in alignment transitions, 100' centers on horizontal curves and 200' centers on tangent alignments.

9. MAINTENANCE: Deflection space shall be kept clear of any grass, construction debris, stockpiled materials, equipment, and objects.

10. REUSE OF CONNECTION PINS: Connection pins may be reused if they have the structural integrity of new pins.

11. INSTALLATIONS ON CURVED ALIGNMENTS: The details presented in these Standards are shown for installations on tangent alignments. Details for horizontally curved alignments are similar.

12. TRANSITIONS: Transitions are required between freestanding, bolted down, staked down and back filled Type K Barrier installations, see Sheet 8 for transition requirements and details. Transitions are also required between installations of Type K Barrier and other types of temporary barrier, see Index No. 415 for transition requirements and details. Splices and transitions are required between installations of Type K Barrier and permanent Bridge or Roadway Traffic Railings, see Sheets 9 through 13 for transition requirements and details. Transitions are required between installations of Type K Barrier and Proprietary (APL) Barrier Systems, See Sheets 14 and 15 for transition requirements and details.

13. PAYMENT: Barrier Units for work zone traffic control and other temporary applications shall be paid for under the contract unit price for Barrier (Temporary) (F&I) (Type K), LF. Any relocation of the Barrier Units required for the project shall be paid for under the contract unit price for Barrier (Temporary) (Relocate) (Type K), LF. The Contractor shall furnish Barrier Units except when the Plans stipulate the availability of Department owned units. Regardless of unit source the Contractor shall furnish all hardware and shall be responsible for all handling including loading, transport, unloading, stockpiling, installation, removal and return. Unless otherwise noted on the Plans, the Barrier Units shall become the property of the Contractor and shall be removed from the site prior to acceptance of the completed project.

NOTES FOR THRIE BEAM GUARDRAIL SPLICE INSTALLATIONS:

1. THRIE-BEAM GUARDRAIL: Provide Thrie-Beam Guardrail for splices in accordance with AASHTO M 180, Type II (Zinc coated) and as follows:
Two panels per splice (One panel per side) of Class B (10 Gauge), or Four panels per splice (Two nested panels per side) of Class A (12 Gauge). Guardrail panel length shall be 12'-6". Provide and install all other associated metallic guardrail components (Terminal Connectors, Shoulder Bolts, Hex Bolts and Nuts, Filler Plates, etc.) in accordance with Index No. 400. Install five Guardrail Anchor Bolts at each end of each splice in any of the standard seven anchor bolt holes in the Thrie-Beam Terminal Connector. If reinforcing steel is encountered when drilling holes for Guardrail Anchor Bolts in Type K Barrier Units, shift Thrie-Beam Terminal Connector so as to clear reinforcing steel within the given tolerances or select a different bolt hole to use. Do not drill or cut through reinforcing steel within Type K Barrier Units. Drilling or cutting through reinforcing steel within permanent concrete traffic railings is permitted. Do not drill or cut through utilities or conduits within permanent concrete traffic railings.

2. GUARDRAIL OFFSET BLOCKS: Provide and install timber Offset Blocks meeting the material requirements of Index No. 400. Field trim Offset Blocks as required for proper fit. Utilize Offset Blocks as shown and required in order to prevent bending or kinking of Thrie-Beam Guardrail panels.

3. CONCRETE FOR FILLING TAPERED TRAFFIC RAILING TOES: Provide concrete for filling tapered toes of Traffic Railings as shown meeting the material requirements of Specification Section 346, any Class, or a commercially available prebagged concrete mix (3000 psi minimum compressive strength). Sampling, testing, evaluation and certification of the concrete in accordance with Specification Section 346 is not required. Saturate with water the surfaces upon and against which the concrete fill will be placed prior to placing concrete. Place and finish concrete fill using forms or by hand methods to the general configurations shown so as to provide a smooth shape transition between the Type K Barrier and the adjacent traffic railing. A low slump is desirable if placing and finishing concrete by hand methods. Cure the concrete fill by application of a curing compound, or by covering with a wet tarp or burlap for a minimum of 24 hours. Completely remove the concrete fill upon relocation or removal of the Type K Temporary Concrete Barrier.

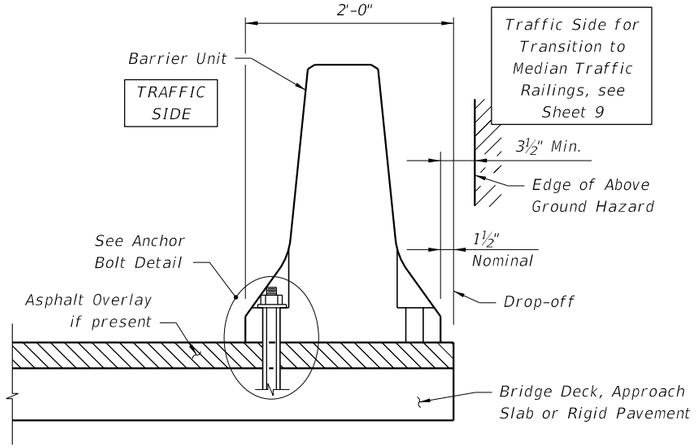

TYPICAL SECTION (BRIDGE DECK SHOWN, APPROACH SLAB OR RIGID PAVEMENT SIMILAR; INSTALLATION ADJACENT TO DROP-OFF SHOWN, MEDIAN TRANSITION INSTALLATION SIMILAR)

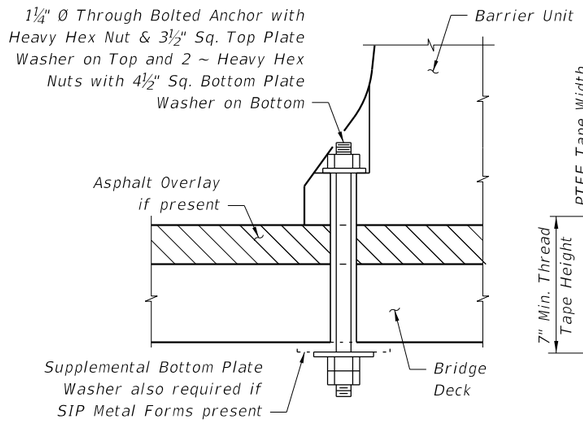

THROUGH BOLTED ANCHOR INSTALLATION ON BRIDGE DECK

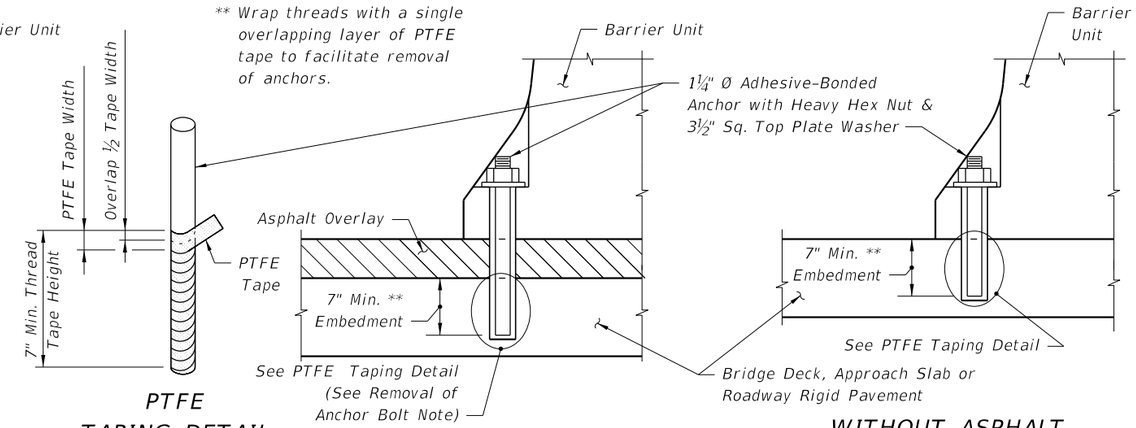

PTFE TAPING DETAIL

WITH ASPHALT OVERLAY

WITHOUT ASPHALT OVERLAY

ADHESIVE BONDED ANCHOR INSTALLATION ON BRIDGE DECK, APPROACH SLAB OR RIGID PAVEMENT

NOTES FOR BOLTED DOWN BRIDGE, APPROACH SLAB, ROADWAY AND TRANSITION INSTALLATIONS:

LIMITATION OF USE: This installation technique can only be used on rigid pavement and concrete bridge decks as shown. Barrier Units shall not be bolted down on bridge superstructures that contain post-tensioned tendons within the concrete deck (top flange of concrete box girders) or on bridge superstructures consisting of longitudinally prestressed, transversely post-tensioned, solid or voided concrete slab units. Anchor Bolts must not be installed on both sides of the Barrier Units. Do not bolt down Barrier Units across bridge finger or modular expansion joints.

ANCHOR BOLTS, NUTS AND WASHERS: Adhesive-Bonded Anchor Bolts shall be fully threaded rods in accordance with ASTM F 1554 Grade 36. Anchor Bolts for through bolting shall be in accordance with ASTM A 307 or ASTM F 1554 Grade 36. Nuts shall be in accordance with ASTM A 563 or ASTM A 194. Flat Washers shall be in accordance with ASTM F 436 and Plate Washers shall be in accordance with ASTM A 36 or ASTM A 709 Grade 36.

Install three (3) Anchor Bolts per Barrier Unit on the traffic side of the Barrier Units as shown, except for Transition Installations. For the number and positions of Anchor Bolts required in Transition Installations see Sheets 8 and 9 and Index No. 415. Drilling through deck reinforcing steel to install Anchor Bolts is permitted. Unless otherwise shown in the Plans, at the Contractor's option Barrier Units may be installed by through bolting (where geometrically possible) or by the use of Adhesive-Bonded Anchor Bolts. Do not drill into or otherwise damage the tops of supporting beams or girders, bridge deck expansion joints or drains. Install Anchor Bolts and Nuts so that the maximum extension beyond the face of the Barrier Units is ½". Snug tighten the Nuts on the Anchor Bolts. For through bolted installations, snug tighten the double Nuts on the underside of the deck against each other to minimize the potential for loosening.

Omit one (1) Anchor Bolt within a single Barrier Unit if a conflict exists between the Anchor Bolt location and a bridge deck expansion joint or drain. The adjacent Barrier Units must each be installed with the standard three (3) Anchor Bolts.

Omit one (1) Anchor Bolt within a single Barrier Unit as shown in the Treatment at Bridge Deck Expansion Joint Schematic if the Barrier Unit straddles a bridge deck expansion joint. The adjacent Barrier Units must each be installed with the standard three (3) Anchor Bolts.

ADHESIVE-BONDING MATERIAL SYSTEMS: Adhesive Bonding Material Systems for Anchor Bolts shall be Type HSHV in accordance with Specification Section 937 and shall be installed in accordance with Specification Section 416. Prior to installation of the Barrier Units in the Plan location(s), install a demonstration Barrier Unit using the proposed production installation method, at a location approved by the Engineer. In lieu of the production test requirements of Specification Section 416-6, install six (6) Adhesive-Bonded Anchor Bolts in the demonstration Barrier Unit and test each Anchor Bolt with a 29,800 pound tensile proof load. Install and test additional demonstration Barrier Units when requested by the Engineer. Remove the demonstration Barrier Unit prior to testing the Anchor Bolts. Remove the test Anchor Bolts after testing as directed by the Engineer.

REMOVAL OF ANCHOR BOLTS: Upon removal or relocation of Barrier Units, remove all Anchor Bolts and completely fill the remaining holes in bridge decks, approach slabs and roadway rigid pavements that are to remain with Magnesium Ammonium Phosphate Concrete in accordance with Specification Section 930 or with an Epoxy Resin Compound, Type F or Q, in accordance with Specification Section 926. If a flexible pavement overlay is present and is to remain, completely fill the remaining holes in the flexible pavement with hot or cold patch asphalt material.

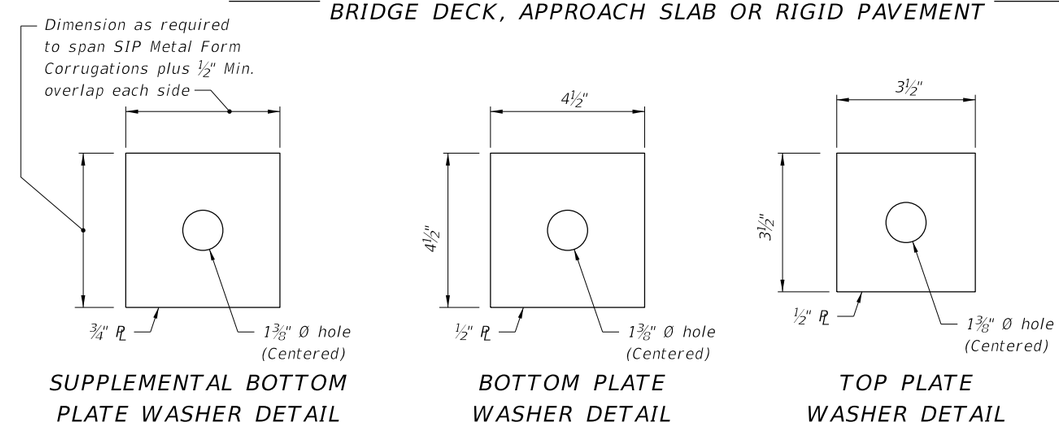

SUPPLEMENTAL BOTTOM PLATE WASHER DETAIL

BOTTOM PLATE WASHER DETAIL

TOP PLATE WASHER DETAIL

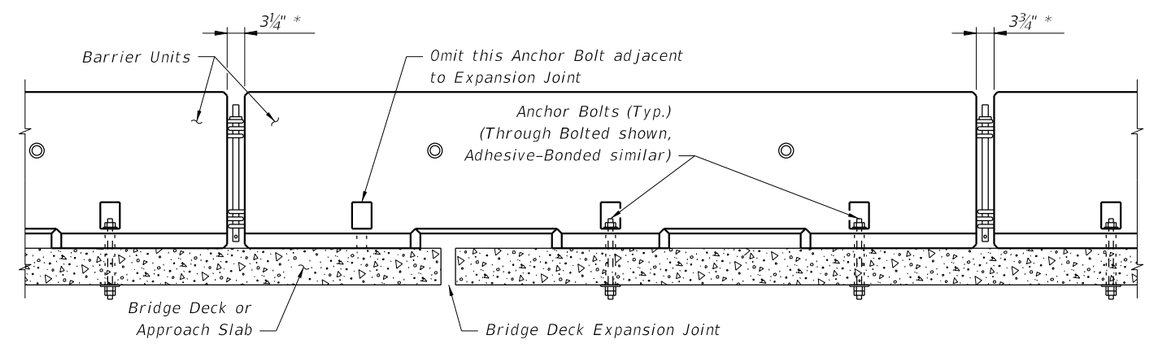

* To accommodate movement at Expansion Joint, set Barrier Units with 3¾" gap at locations shown.

TREATMENT AT BRIDGE DECK EXPANSION JOINT SCHEMATIC

BOLTED DOWN BRIDGE, APPROACH SLAB, ROADWAY AND TRANSITION INSTALLATIONS

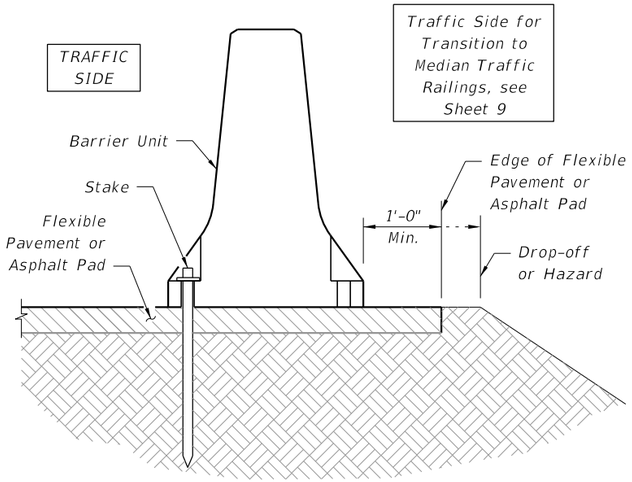

TYPICAL SECTION (INSTALLATION ADJACENT TO DROP-OFF SHOWN, MEDIAN TRANSITION INSTALLATION SIMILAR)

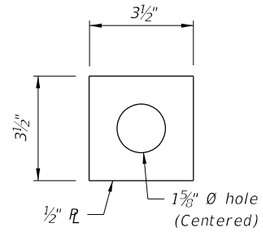

STOP PLATE DETAIL

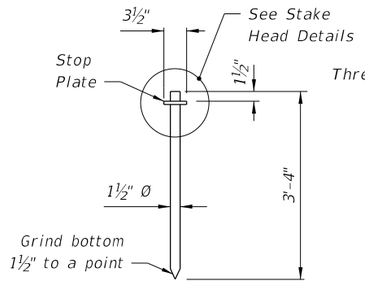

STAKE DETAIL

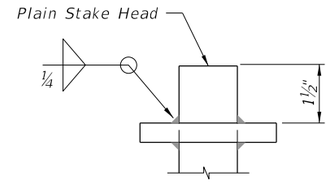

PLAIN STAKE HEAD DETAIL

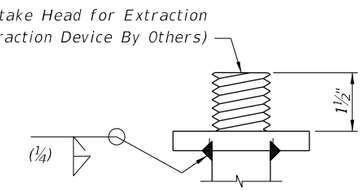

OPTIONAL EXTRACTION STAKE HEAD DETAIL

NOTES FOR STAKED DOWN ROADWAY AND TRANSITION INSTALLATIONS:

LIMITATION OF USE: This installation technique can only be used on flexible pavement or an Asphalt Pad as shown. Stakes must not be installed on both sides of the Barrier Units.

STAKES: Provide steel for Stake assemblies in accordance with ASTM A 36 or ASTM A 709 Grade 36. All welding shall be in accordance with the American Welding Society Structural Welding Code (Steel) ANSI/AWS D1.1 (current edition). Weld metal shall be E60XX or E70XX. Nondestructive testing of welds is not required.

Install three (3) Stakes on the traffic side of the Barrier Units as shown, except for Transition Installations. For the number and positions of stakes required in Transition Installations see Sheets 4, 5 and 6 and Index No. 415. Install Stakes so that the Stop Plate is snug against the bottom of the Anchor Blockout.

BURIED UTILITIES: Prior to installation of Stakes verify locations of all adjacent buried utilities, drainage structures, pipes, etc. If conflicts between Stake locations and buried elements exist, a maximum of two (2) Stakes within a single Barrier Unit may be omitted if the adjacent Barrier Units are installed with the standard three (3) Stakes.

REMOVAL OF STAKES: Upon removal or relocation of Barrier Units, completely remove all Stakes and completely fill the remaining holes in flexible pavement that is to remain with hot or cold patch asphalt material.

REUSE OF STAKES: Stakes may be reused if they have the structural integrity of new stakes.

STAKED DOWN ROADWAY AND TRANSITION INSTALLATIONS

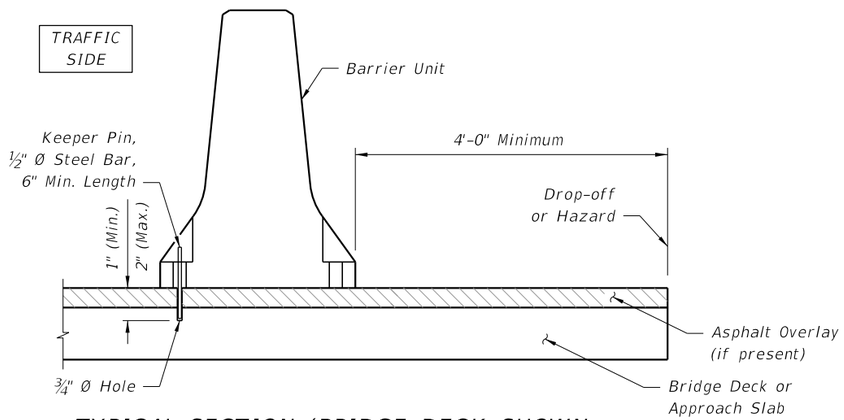

TYPICAL SECTION (BRIDGE DECK SHOWN, APPROACH SLAB SIMILAR)

NOTES FOR FREE STANDING BRIDGE OR APPROACH SLAB INSTALLATIONS:

KEEPER PINS: Keeper Pins shall be ½" diameter, smooth steel bar in accordance with ASTM A 36 or ASTM A 709 Grade 36. As directed by the Engineer in order to limit vibration induced translation of the Barrier Units, install one (1) Keeper Pin per Barrier Unit on the traffic side of the Barrier Units as shown. Do not drill into or otherwise damage bridge deck expansion joints or drains.

REMOVAL OF KEEPER PINS: Upon removal or relocation of Barrier Units, remove all Keeper Pins and completely fill the remaining holes in bridge decks and approach slabs that are to remain with Magnesium Ammonium Phosphate Concrete in accordance with Specification Section 930 or with an Epoxy Resin Compound, Type F or Q, in accordance with Specification Section 926. If a flexible pavement overlay is present and is to remain, completely fill the remaining holes in the flexible pavement with hot or cold patch asphalt material.

FREESTANDING BRIDGE OR APPROACH SLAB INSTALLATIONS

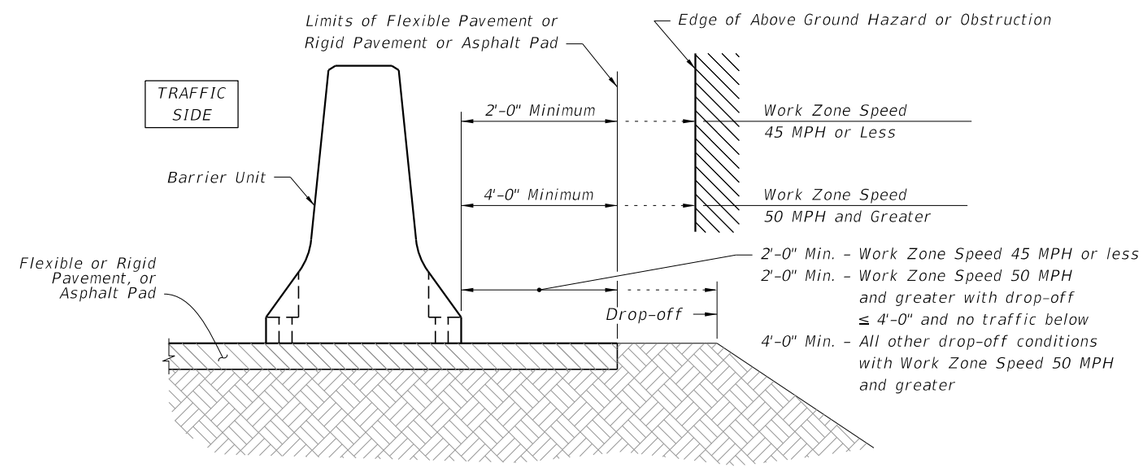

TYPICAL SECTION

NOTES FOR FREE STANDING ROADWAY INSTALLATION:

LIMITATION OF USE: This installation technique can only be used on flexible or rigid pavement or on an Asphalt Pad as shown.

FREESTANDING ROADWAY INSTALLATION

10/24/2016 9:40:22 AM

LAST REVISION	REVISION	DESCRIPTION:			INDEX NO.	SHEET NO.
11/01/16			FY 2017-18 DESIGN STANDARDS	TYPE K TEMPORARY CONCRETE BARRIER SYSTEM	414	6 of 15

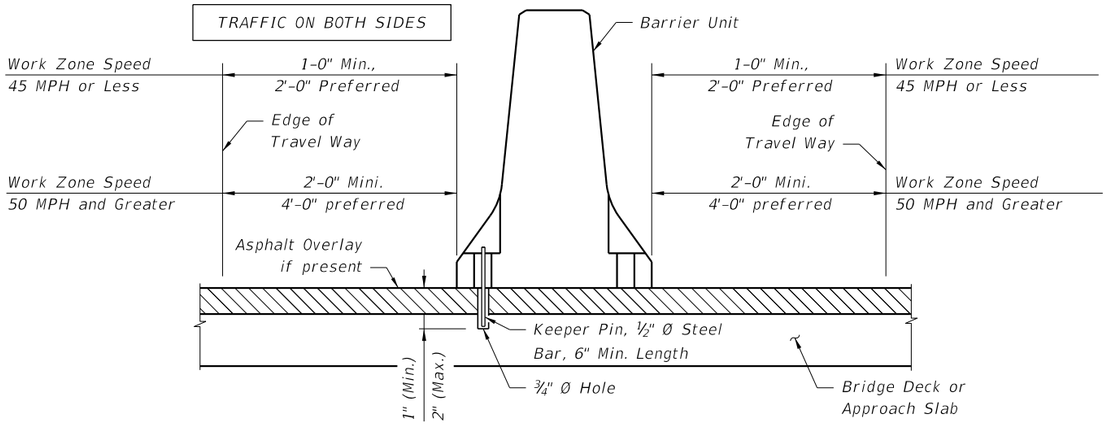

TYPICAL SECTION

NOTES FOR FREESTANDING MEDIAN INSTALLATION:

KEEPER PINS: Required for Bridge Decks only, Keeper Pins shall be ½" diameter, smooth steel bar in accordance with ASTM A 36 or ASTM A 709 Grade 36. As directed by the Engineer in order to limit vibration induced translation of the Barrier Units, install one (1) Keeper Pin per Barrier Unit as shown. Alternate Keeper Pin locations from side to side of Barrier Units along the length of the installation. Do not drill into or otherwise damage bridge deck expansion joints or drains. Upon removal or relocation of Barrier Units, remove all Keeper Pins and completely fill the remaining holes in bridge decks and approach slabs that are to remain with Magnesium Ammonium Phosphate Concrete in accordance with Specification Section 930 or with an Epoxy Resin Compound, Type F or Q, in accordance with Specification Section 926. If a flexible pavement overlay is present and is to remain, completely fill the remaining holes in the flexible pavement with hot or cold patch asphalt material.

FREESTANDING MEDIAN INSTALLATION

(Bridge Deck Shown, Approach Slab, Asphalt Pad, Flexible or Rigid Pavement Similar)

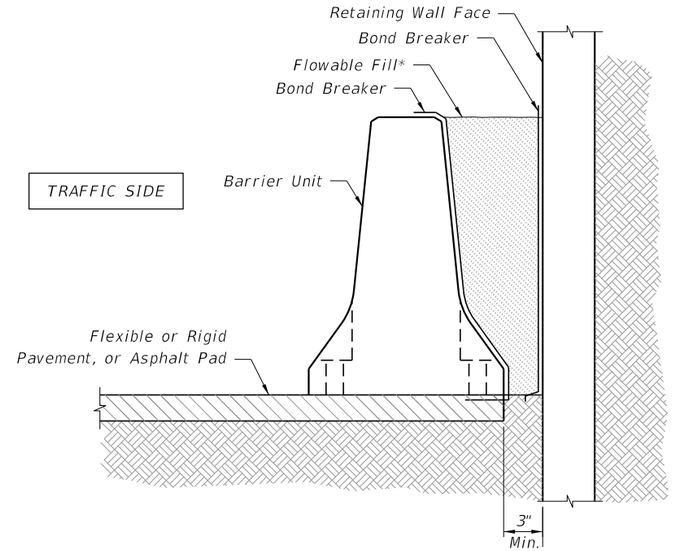

TYPICAL SECTION
ADJACENT TO RETAINING WALL WITH FLOWABLE FILL BACK FILL

*FLOWABLE FILL: Provide Flowable Fill in accordance with Specification Section 121.

FLOWABLE FILL BACK FILL ROADWAY INSTALLATIONS

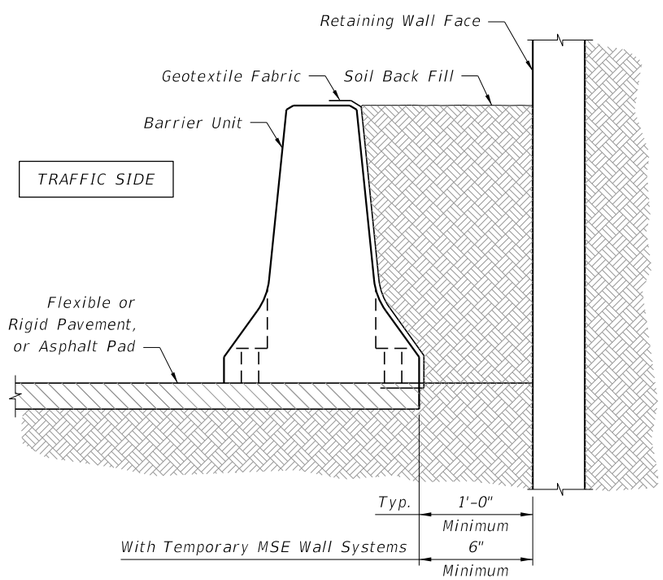

TYPICAL SECTION
ADJACENT TO RETAINING WALL WITH SOIL BACK FILL

NOTES FOR SOIL BACK FILLED ROADWAY INSTALLATIONS:

SOIL BACK FILL MATERIAL: Provide Back Fill Material consisting of any available clean soil. Compact Back Fill Material until the soil mass is firm and unyielding. Provide erosion control as specified in the Plans. If none is specified in the Plans, provide erosion control as required to maintain the integrity of the Back Fill embankment.

GEOTEXTILE FABRIC: Provide Type D-5 Geotextile Fabric in accordance with Specification Section 985 to contain Back Fill Material behind Barrier Units. Geotextile Fabric may be continuous over the length and height of the installation or may be individual pieces as required to cover the Lift / Drain Slots and open vertical joints between Barrier Units.

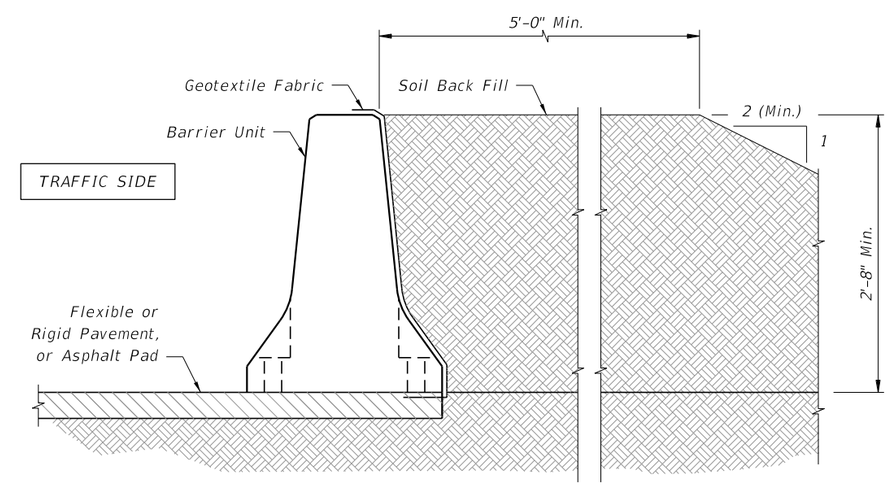

TYPICAL SECTION
WITH SOIL BACK FILL

SOIL BACK FILLED ROADWAY INSTALLATIONS

10/24/2016 9:40:25 AM

LAST REVISION	REVISION	DESCRIPTION:			INDEX NO.	SHEET NO.
11/01/16			FY 2017-18 DESIGN STANDARDS	TYPE K TEMPORARY CONCRETE BARRIER SYSTEM	414	7 of 15

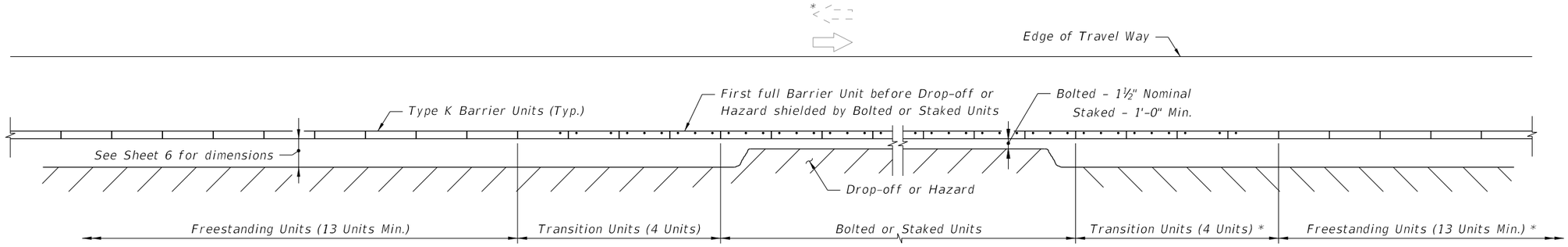

APPROACH TRANSITION FROM FREESTANDING TO BOLTED OR STAKED DOWN TYPE K TEMPORARY CONCRETE BARRIERS

* NOTE:
Where Barrier is located within Clear Zone of opposing traffic, Approach Transition is required.

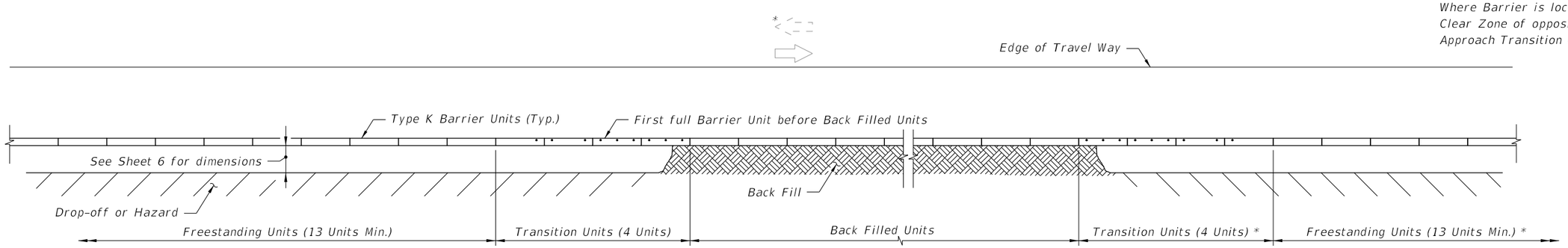

APPROACH TRANSITION FROM FREESTANDING TO BACK FILLED TYPE K TEMPORARY CONCRETE BARRIERS

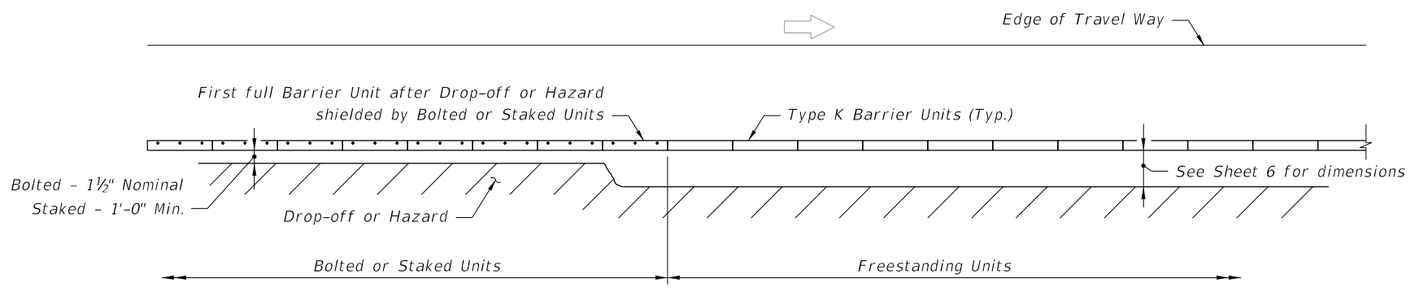

TRAILING END TRANSITION FROM BOLTED OR STAKED DOWN TO FREESTANDING TYPE K TEMPORARY CONCRETE BARRIERS

LEGEND:

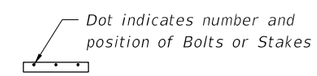

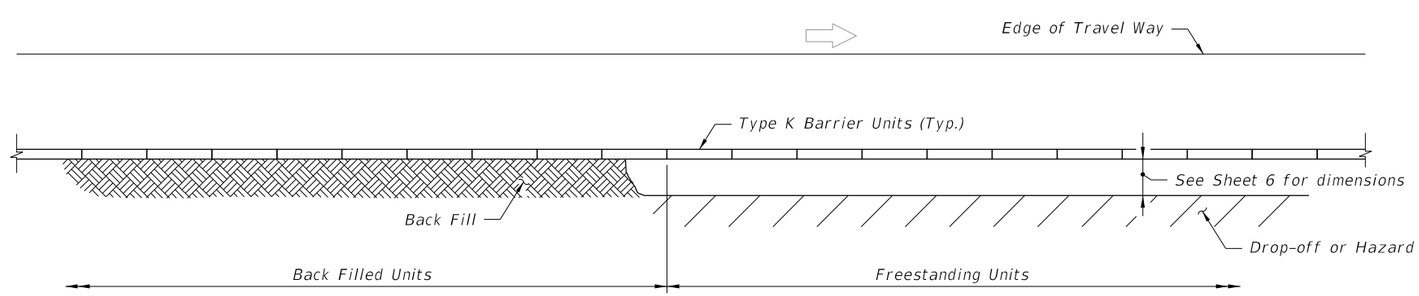

TRAILING END TRANSITION FROM BACK FILLED TO FREESTANDING TYPE K TEMPORARY CONCRETE BARRIERS

10/24/2016 9:40:28 AM

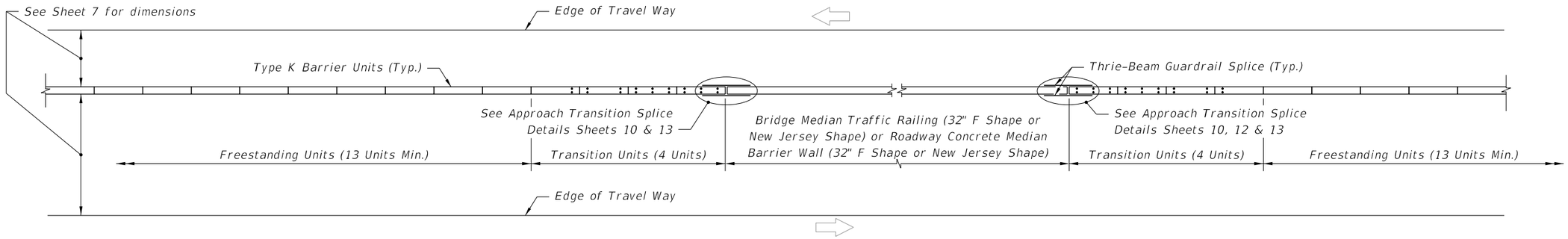

TRANSITION FROM FREESTANDING TYPE K TEMPORARY CONCRETE BARRIERS TO BRIDGE MEDIAN TRAFFIC RAILING OR ROADWAY MEDIAN CONCRETE BARRIER WALL

* NOTE:
Where barrier is located within clear zone of opposing traffic, approach transition is required.

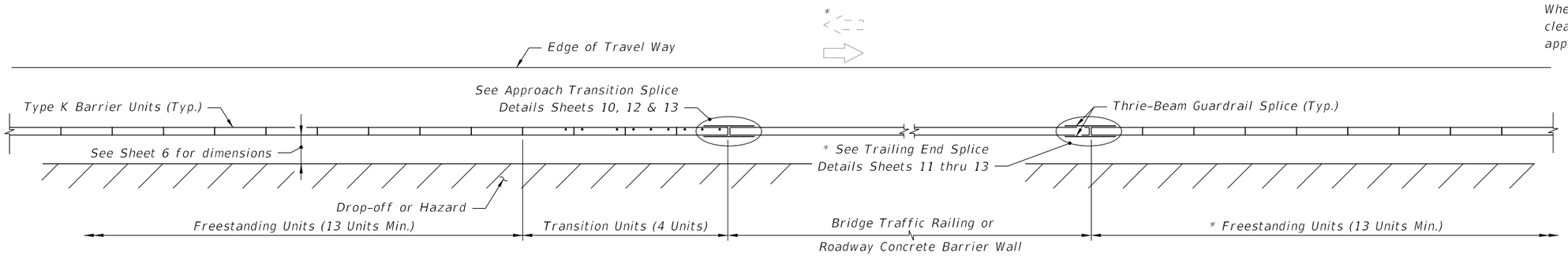

TRANSITION FROM FREESTANDING TYPE K TEMPORARY CONCRETE BARRIERS TO BRIDGE TRAFFIC RAILING OR ROADWAY CONCRETE BARRIER WALL

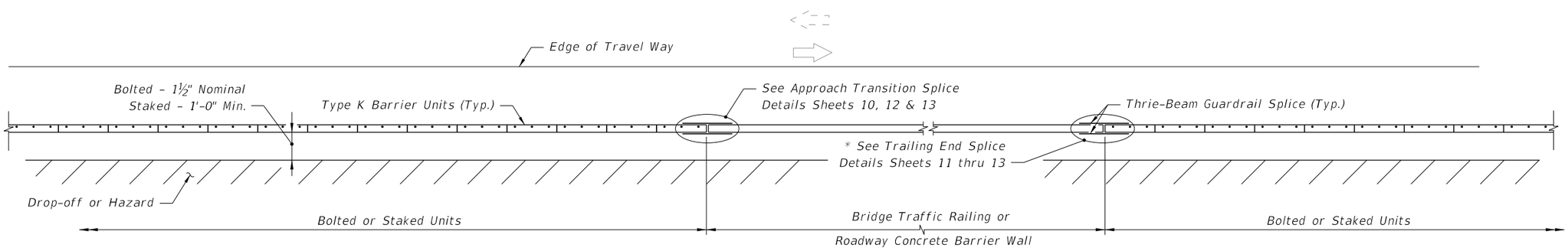

TRANSITION FROM BOLTED OR STAKED DOWN TYPE K TEMPORARY CONCRETE BARRIERS TO BRIDGE TRAFFIC RAILING OR ROADWAY CONCRETE BARRIER WALL

LEGEND:

Dot indicates number and position of Bolts or Stakes

10/24/2016 9:40:31 AM

LAST REVISION	REVISION	DESCRIPTION:			INDEX NO.	SHEET NO.
07/01/13			FDOT FY 2017-18 DESIGN STANDARDS	TYPE K TEMPORARY CONCRETE BARRIER SYSTEM	414	9 of 15

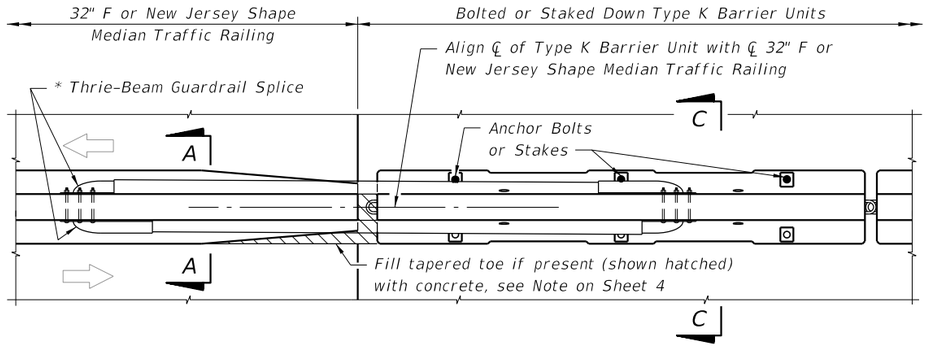

PARTIAL PLAN VIEW AT MEDIAN TRAFFIC RAILING

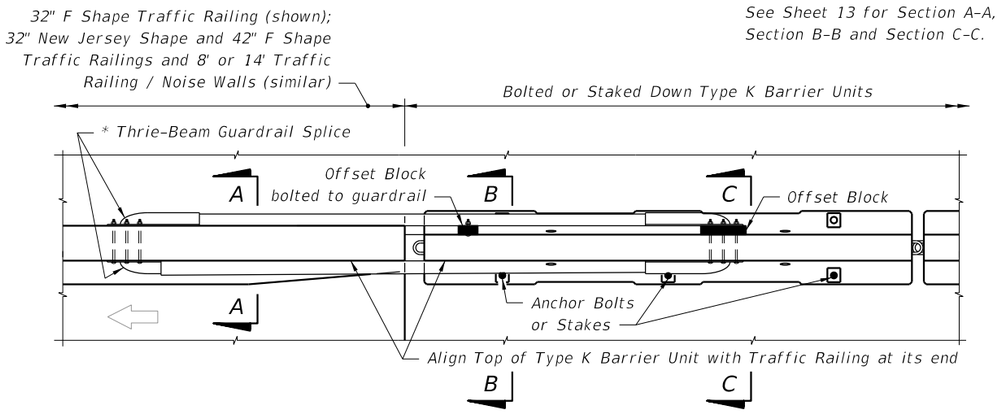

PARTIAL PLAN VIEW AT SHOULDER TRAFFIC RAILING

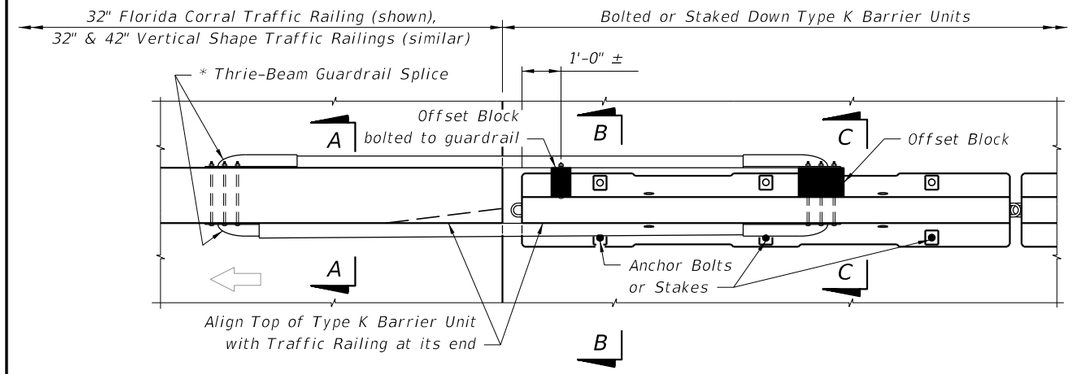

PARTIAL PLAN VIEW

Cross References:
See Sheet 13 for Section A-A,
Section B-B and Section C-C.

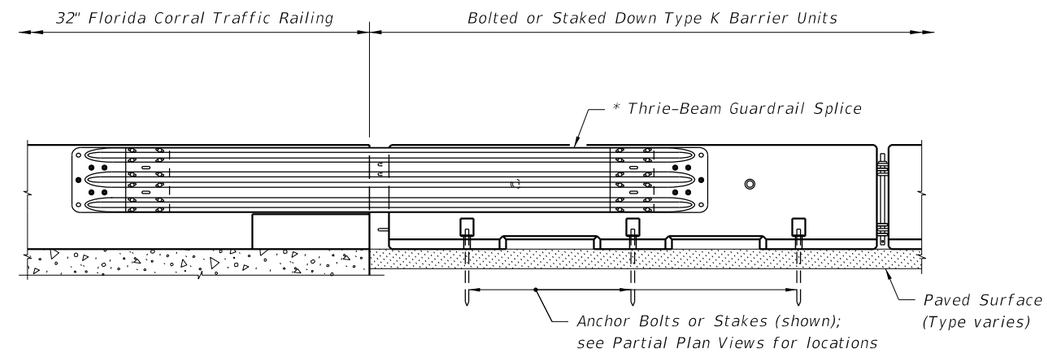

PARTIAL ELEVATION VIEW - FLORIDA CORRAL TRAFFIC RAILING

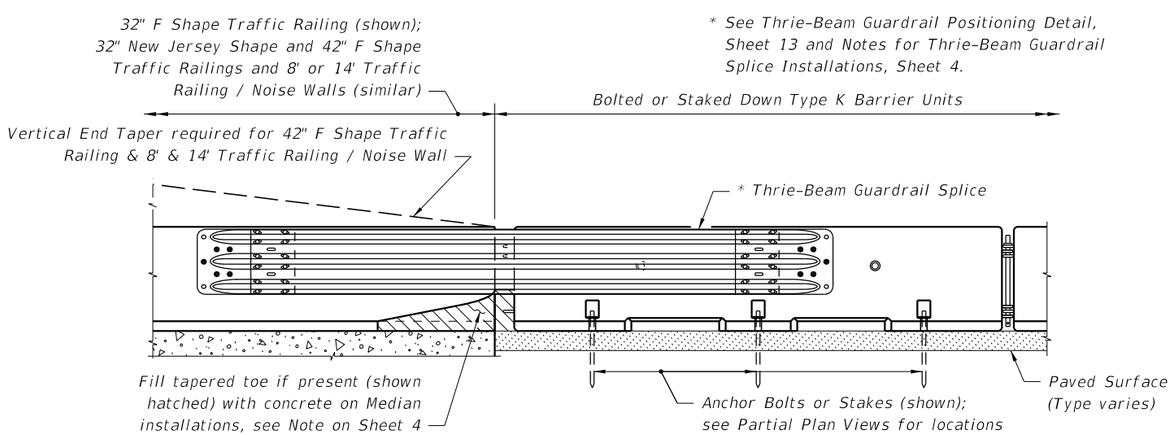

PARTIAL ELEVATION VIEW

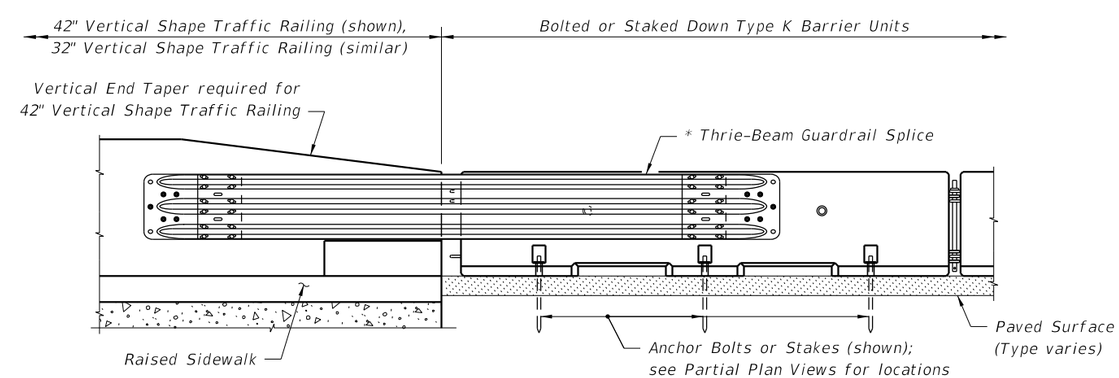

PARTIAL ELEVATION VIEW - VERTICAL SHAPE TRAFFIC RAILINGS

APPROACH TRANSITION SPLICE DETAIL
FOR F AND NEW JERSEY SHAPE TRAFFIC RAILINGS AND 8' & 14' TRAFFIC RAILING / NOISE WALLS (CONCRETE BARRIER WALL SIMILAR)

APPROACH TRANSITION SPLICE DETAIL
FOR FLORIDA CORRAL AND VERTICAL SHAPE TRAFFIC RAILINGS

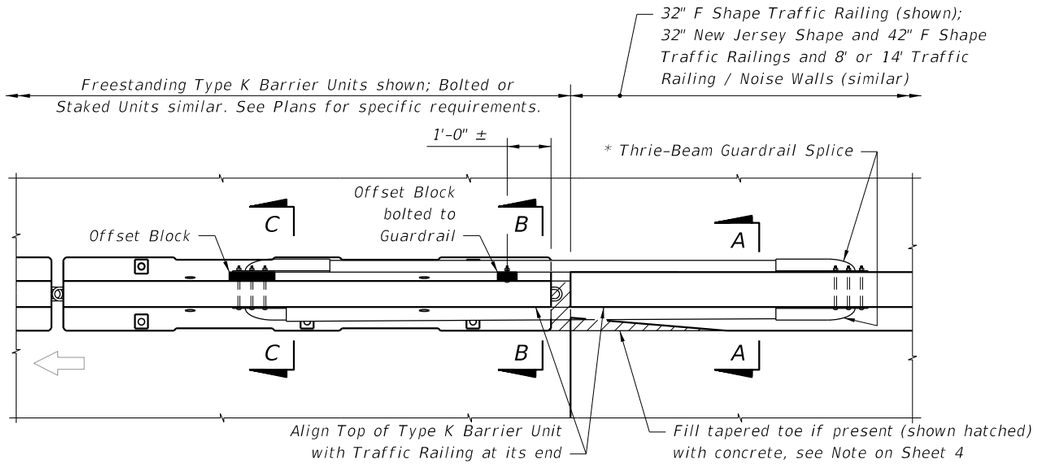

PARTIAL PLAN VIEW

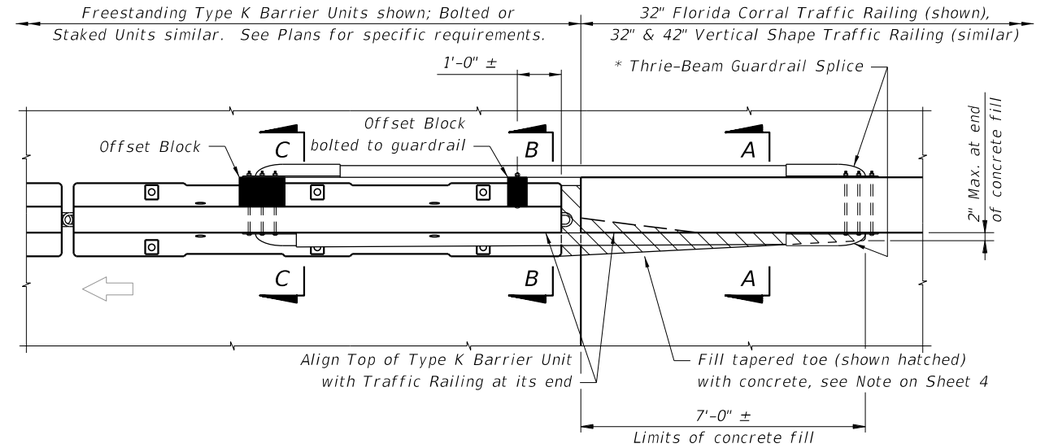

PARTIAL PLAN VIEW

* See Thrie-Beam Guardrail Positioning Detail, Sheet 13 and Notes for Thrie-Beam Guardrail Splice Installations, Sheet 4.

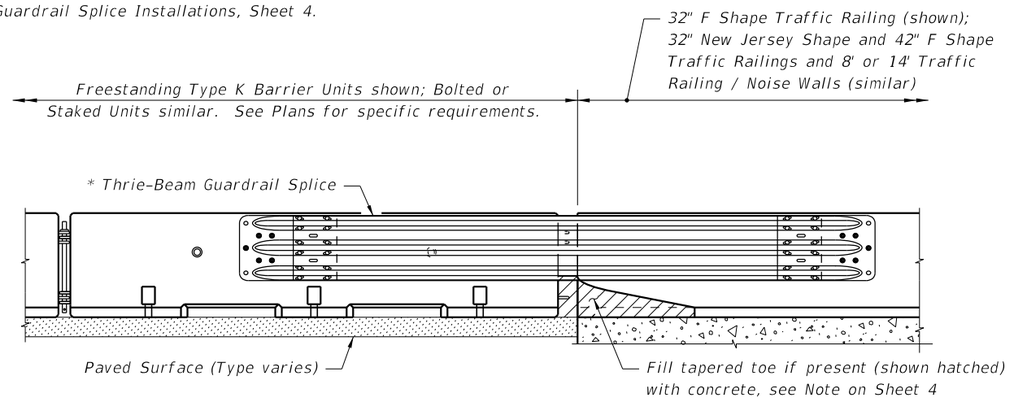

PARTIAL ELEVATION VIEW

Cross References:
See Sheet 13 for Section A-A,
Section B-B and Section C-C.

TRAILING END SPLICE DETAIL
FOR F AND NEW JERSEY SHAPE TRAFFIC RAILINGS AND 8' & 14' TRAFFIC RAILING / NOISE WALLS

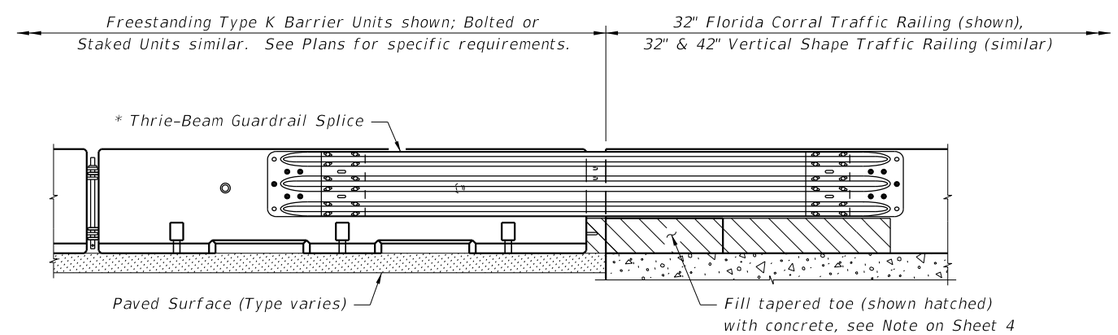

PARTIAL ELEVATION VIEW

Cross References:
See Sheet 13 for Section A-A,
Section B-B and Section C-C.

TRAILING END SPLICE DETAIL
FOR FLORIDA CORRAL AND VERTICAL SHAPE TRAFFIC RAILINGS

10/24/2016 9:40:37 AM

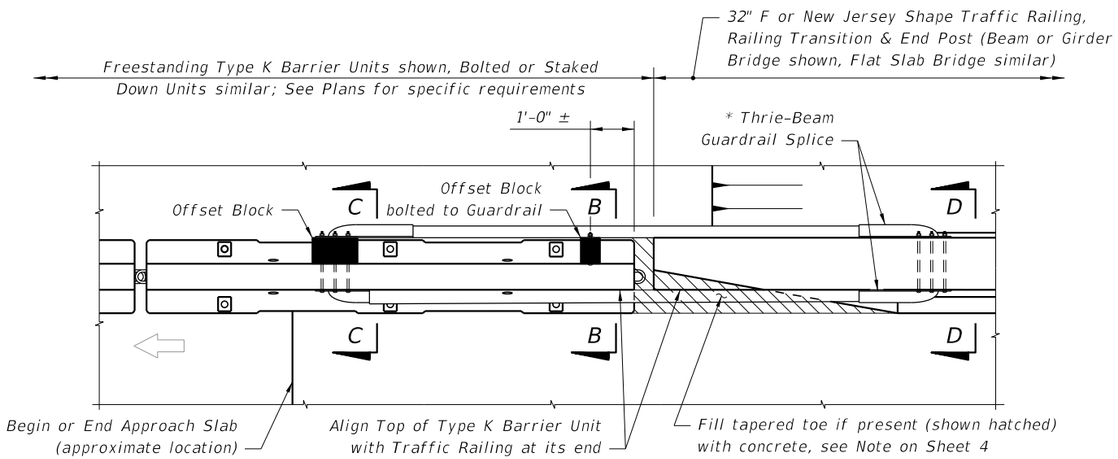

PARTIAL PLAN VIEW

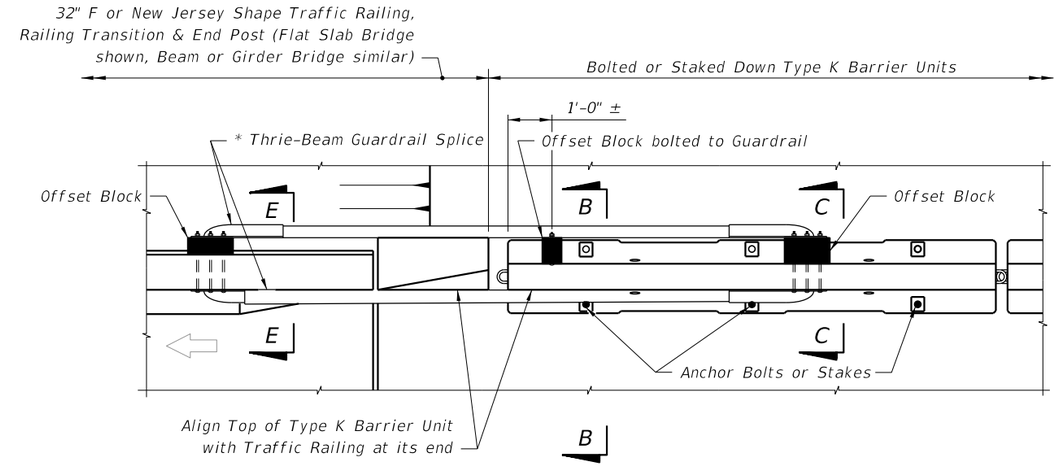

PARTIAL PLAN VIEW

* See Thrie-Beam Guardrail Positioning Detail, Sheet 13 and Notes for Thrie-Beam Guardrail Splice Installations, Sheet 4.

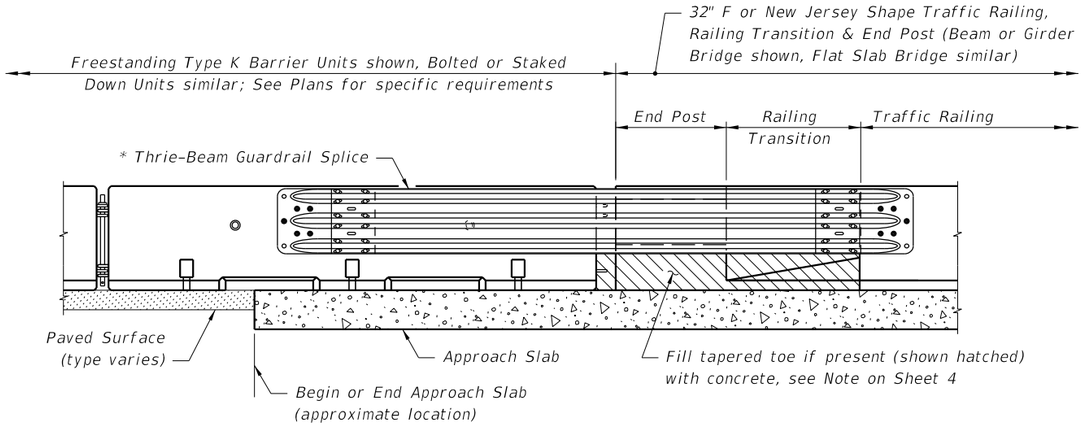

PARTIAL ELEVATION VIEW

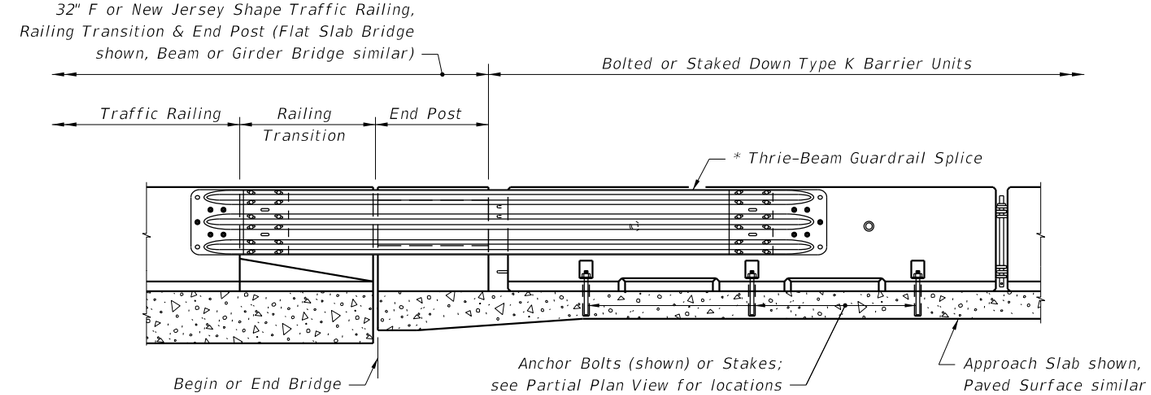

PARTIAL ELEVATION VIEW

Cross References:
See Sheet 13 for Section B-B, Section C-C and Section D-D.

TRAILING END SPLICE DETAIL
FOR 32" F AND NEW JERSEY SHAPE TRAFFIC RAILINGS WITH RAILING TRANSITION AND END POST

Cross References:
See Sheet 13 for Section B-B, Section C-C and Section E-E.

APPROACH TRANSITION SPLICE DETAIL
FOR 32" F AND NEW JERSEY SHAPE TRAFFIC RAILINGS WITH RAILING TRANSITION AND END POST

10/24/2016 9:40:43 AM

LAST REVISION	REVISION	DESCRIPTION:			INDEX NO.	SHEET NO.
07/01/07			FDOT FY 2017-18 DESIGN STANDARDS	TYPE K TEMPORARY CONCRETE BARRIER SYSTEM	414	12 of 15

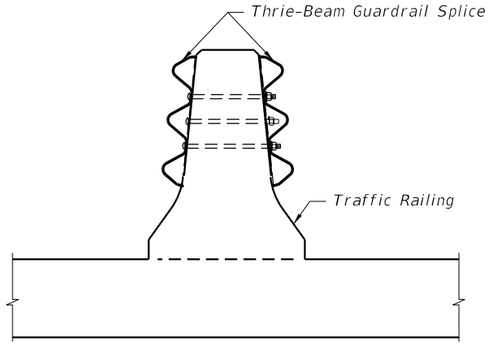

SECTION A-A
32" F Shape Median Traffic Railing (shown), Median Concrete Barrier Wall (similar)

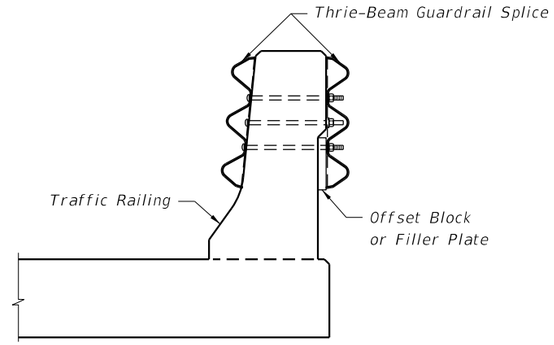

SECTION A-A
32" F Shape Traffic Railing (shown), 42" Traffic Railing and 8' & 14' Traffic Railing / Noise Walls (similar)

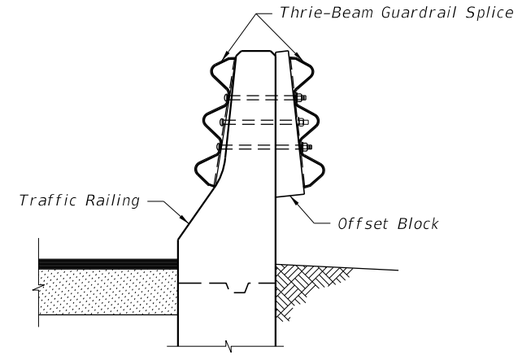

SECTION A-A
32" New Jersey Shape Concrete Barrier Wall (shown), 32" New Jersey Shape Traffic Railing & other Narrow Traffic Railings (similar)

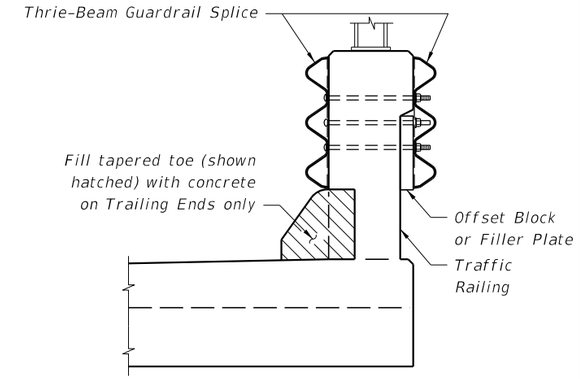

SECTION A-A
32" & 42" Vertical Shape Traffic Railing (shown), Florida Corral Traffic Railing (similar)

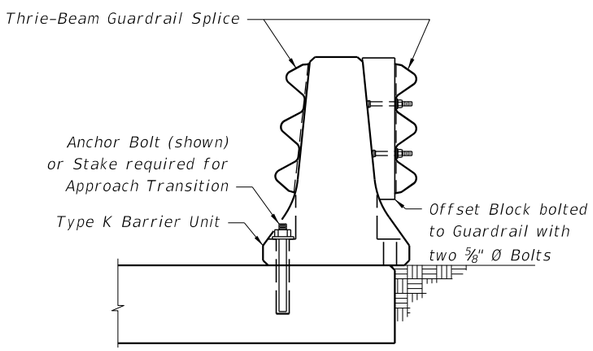

SECTION B-B
Adjacent to Shoulder Traffic Railings

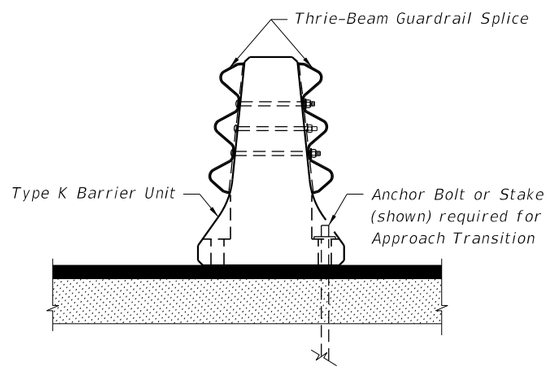

SECTION C-C
Adjacent to 32" F or New Jersey Shape Median Traffic Railing or Median Concrete Barrier Wall

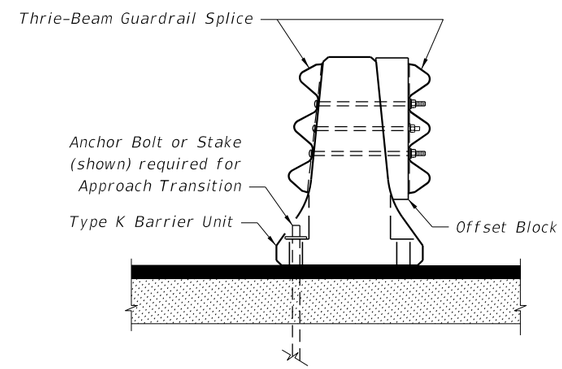

SECTION C-C
Adjacent to Shoulder Traffic Railings

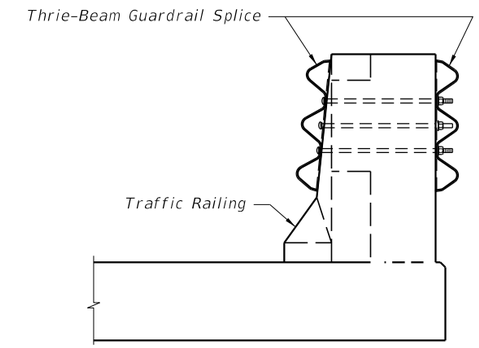

SECTION D-D
32" F or New Jersey Shape Traffic Railing, Railing Transition & End Post

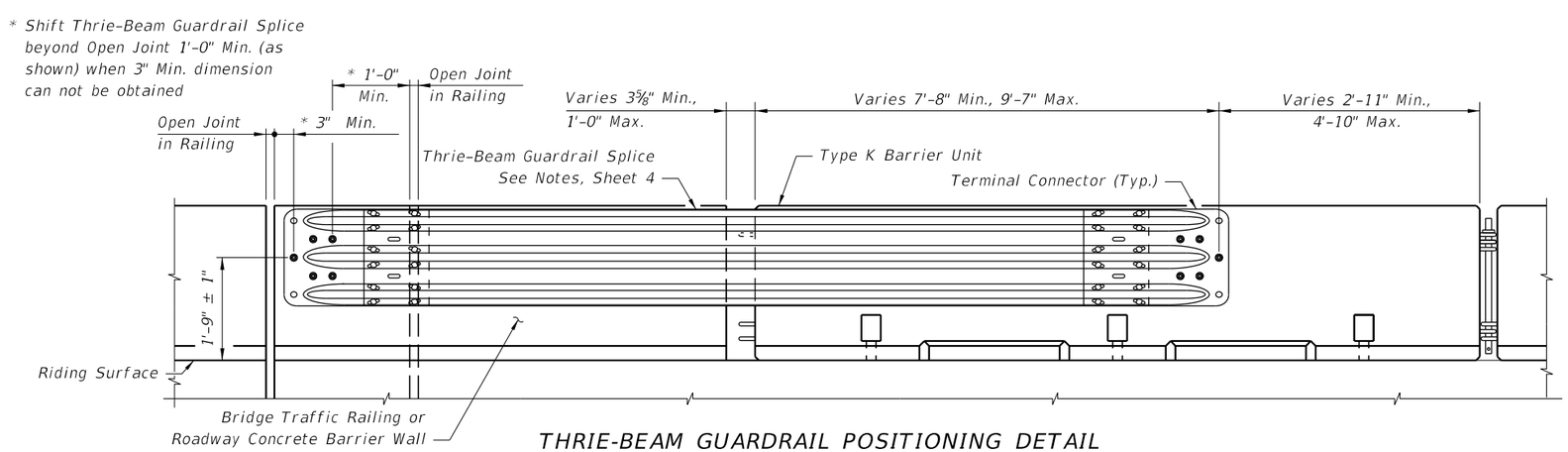

THRIE-BEAM GUARDRAIL POSITIONING DETAIL

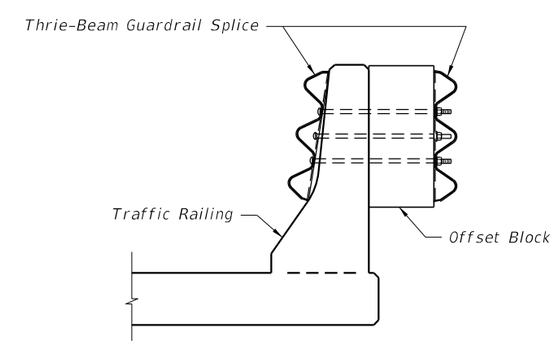

SECTION E-E
32" New Jersey Shape Traffic Railing (shown), 32" F Shape Traffic Railing (similar)

10/24/2016 9:40:45 AM

LAST REVISION	REVISION	DESCRIPTION:			INDEX NO.	SHEET NO.
07/01/13			FDOT FY 2017-18 DESIGN STANDARDS	TYPE K TEMPORARY CONCRETE BARRIER SYSTEM	414	13 of 15

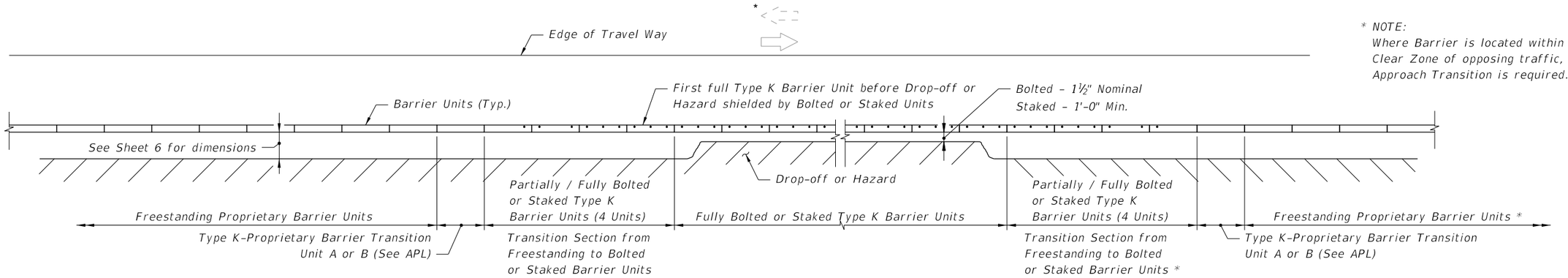

* NOTE:
Where Barrier is located within Clear Zone of opposing traffic, Approach Transition is required.

APPROACH TRANSITION FROM FREESTANDING PROPRIETARY TEMPORARY BARRIERS TO BOLTED OR STAKED DOWN TYPE K TEMPORARY CONCRETE BARRIERS

LEGEND:

Dot indicates number and position of Bolts or Stakes

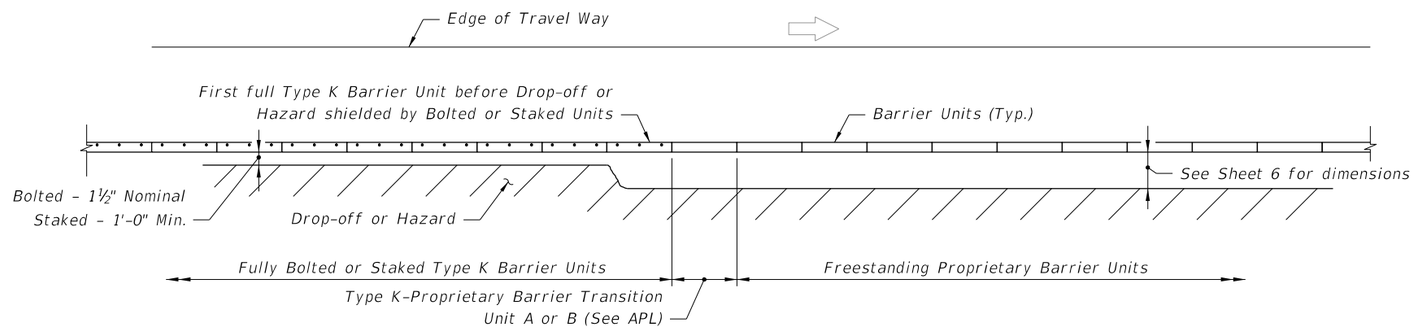

TRAILING END TRANSITION FROM BOLTED OR STAKED DOWN TYPE K TEMPORARY CONCRETE BARRIERS TO FREESTANDING PROPRIETARY TEMPORARY BARRIERS

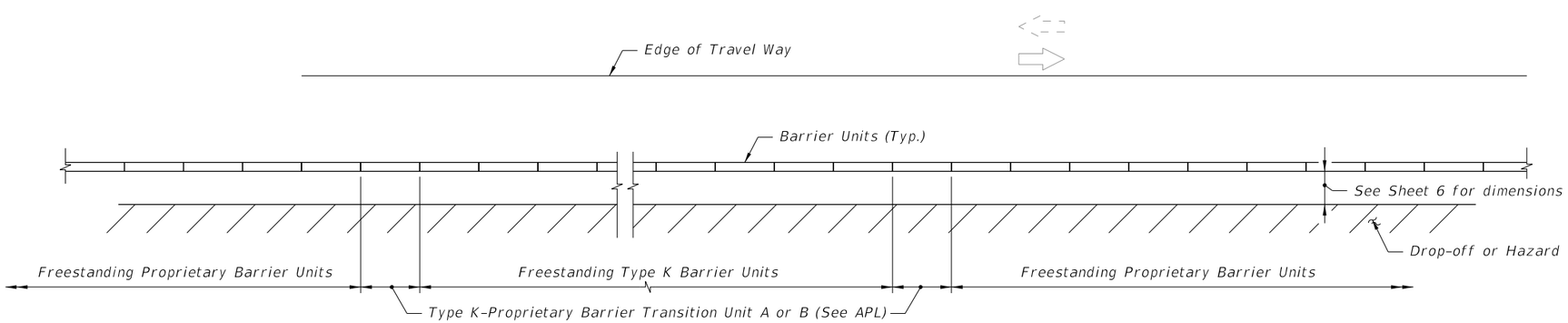

APPROACH AND TRAILING END TRANSITIONS FROM FREESTANDING TYPE K TEMPORARY CONCRETE BARRIERS TO FREESTANDING PROPRIETARY TEMPORARY BARRIERS

TYPE K-PROPRIETARY TEMPORARY CONCRETE BARRIER TRANSITIONS

10/24/2016 9:40:47 AM

LAST REVISION	REVISION	DESCRIPTION:			INDEX NO.	SHEET NO.
07/01/07			FY 2017-18 DESIGN STANDARDS	TYPE K TEMPORARY CONCRETE BARRIER SYSTEM	414	14 of 15

* NOTE:
Where Barrier is located within Clear Zone of opposing traffic, Approach Transition is required.

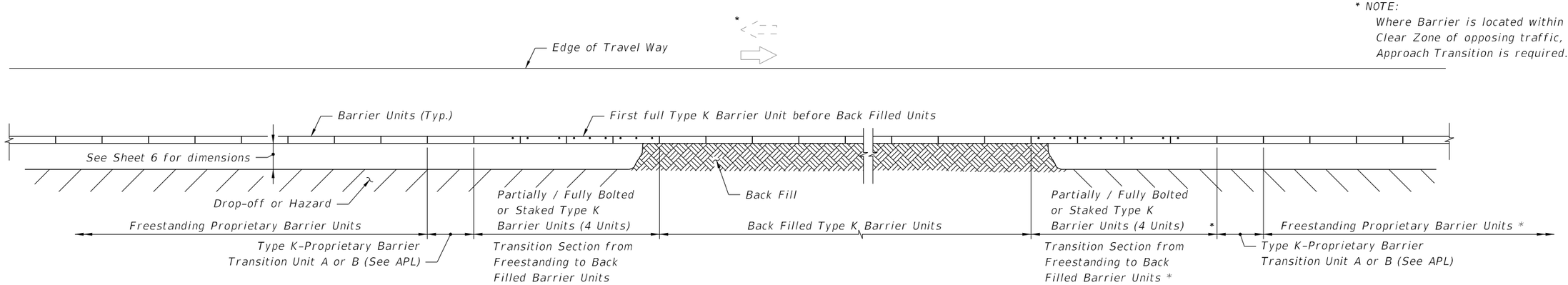

APPROACH TRANSITION FROM FREESTANDING PROPRIETARY TEMPORARY BARRIERS TO BACK FILLED TYPE K TEMPORARY CONCRETE BARRIERS

LEGEND:

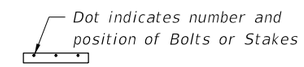

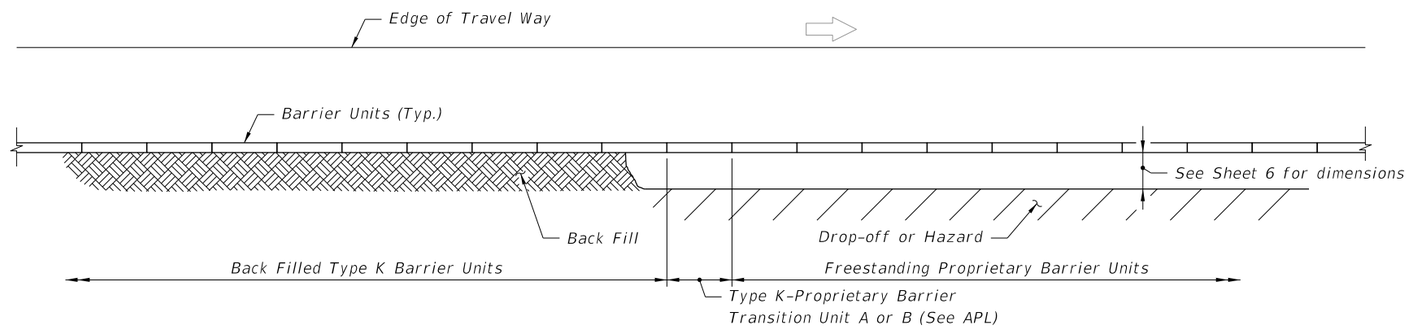

TRAILING END TRANSITION FROM BACK FILLED TYPE K TEMPORARY CONCRETE BARRIERS TO FREESTANDING PROPRIETARY BARRIERS

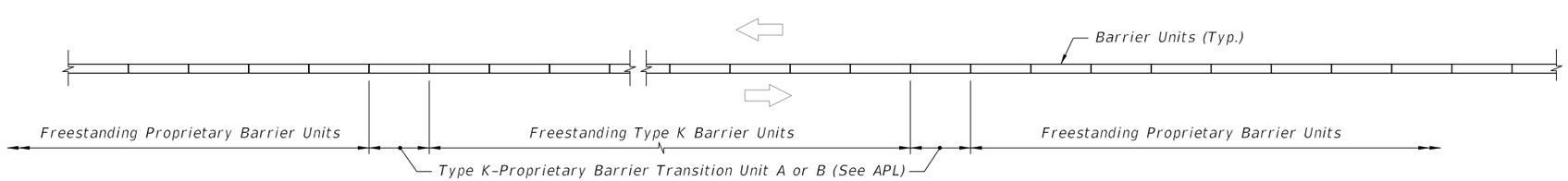

MEDIAN APPROACH AND TRAILING END TRANSITIONS FROM FREESTANDING TYPE K TEMPORARY CONCRETE BARRIERS TO FREESTANDING PROPRIETARY TEMPORARY BARRIERS

TYPE K-PROPRIETARY TEMPORARY CONCRETE BARRIER TRANSITIONS