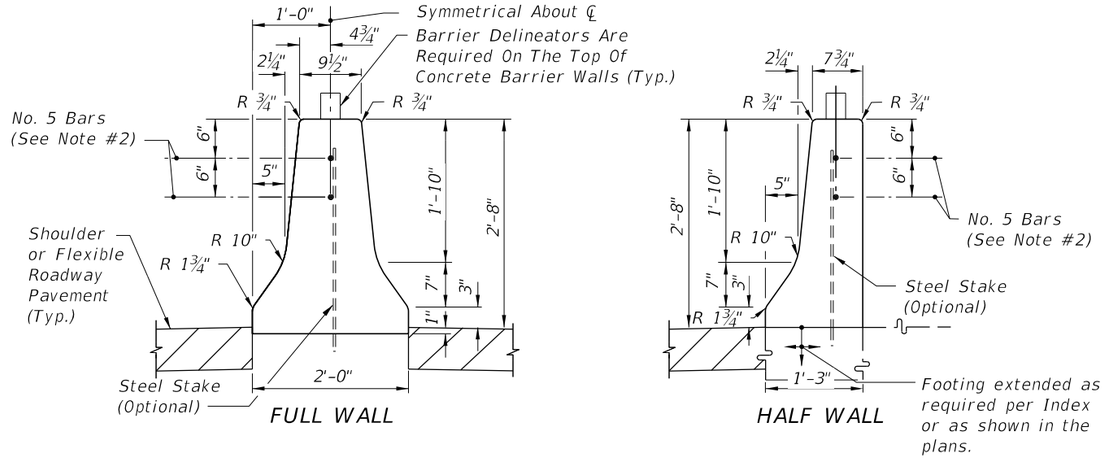

STANDARD BARRIER WALL SECTIONS
DETAIL I

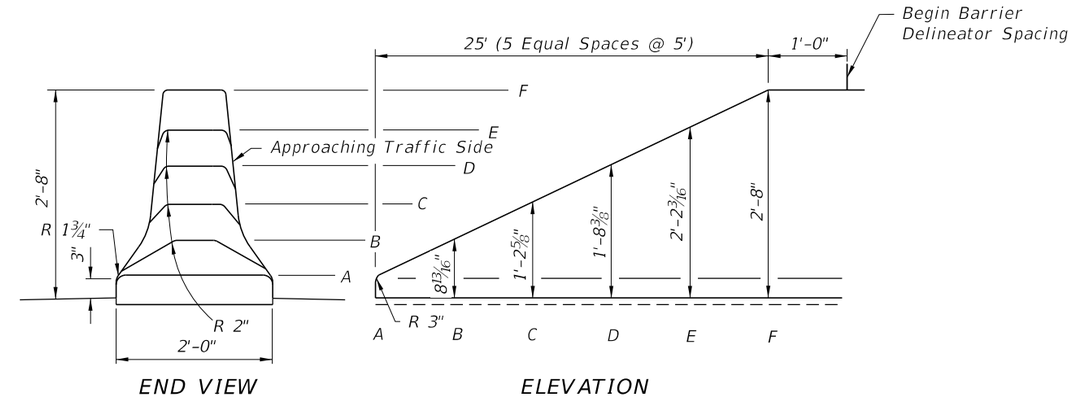

CONCRETE BARRIER WALL TERMINAL
DETAIL II

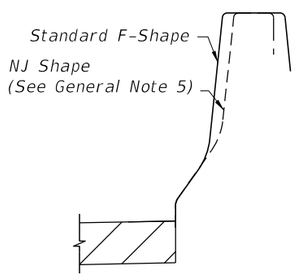

WALL FACE SAFETY SHAPES

BARRIER DELINEATOR SPACING FOR CONCRETE BARRIER WALLS		
LOCATION		REMARKS
OFFSET	SPACING	
< 4'	40'	1. Install barrier delineators for use on Concrete Barrier Walls in accordance with Specification Section 993. 2. Retroreflective sheeting shall be yellow or white and conform to the color of the near Edge of Travel Way, Lane Line.
4' to 8'	80'	
> 8'	100'	

Note: Location Offset is measured from the Edge of Travel Way, Lane Line to the Concrete Barrier Wall, Gutter Line.

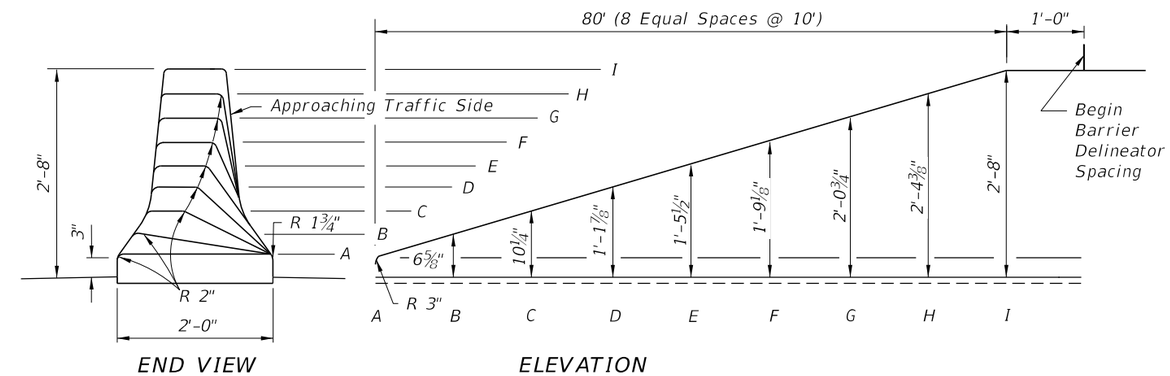

DESIGN SPEED 45 MPH OR LESS
CONCRETE BARRIER WALL TERMINAL FOR NARROW MEDIANS
DETAIL III

GENERAL NOTES

1. Class II concrete shall be used for the construction of Concrete Barrier Walls; except, in moderately and extremely aggressive environments, Class IV concrete shall be used. All nondesignated size reinforcing steel shall be No. 5 bars. Exposed concrete surfaces shall have a Class 3 surface finish in accordance with Specification Section 521 or as required in the plans.

2. Longitudinal reinforcement to be continuous or spliced No. 5 Bars. Lap splices a minimum of 2'-0".

3. Concrete barrier wall terminal notes for design speeds ≥=50 mph.

   a. Terminated outside clear zone of the approach traffic, use DETAIL II end treatment.
   b. Terminated within a shielded location.
   c. Terminal protection by the use of a crash cushion system.
   d. Terminated in conjunction with a suitably designed transition to another barrier.

4. Expansion joints are required at bridge ends and/or at locations where the wall is an integral part of an existing or proposed concrete slab. Construct required joints to match existing or proposed expansion joints.

5. When the barrier is installed adjacent to the pavement, compact the top 12" of the subgrade to at least 98% of the maximum density determined by FM 1-T 180, Method D.

6. Where standard F-Shape walls abut existing New Jersey (NJ) Shape walls, face transitions of not less than 5' in length shall be constructed at the adjoining end of the F-Shape wall.

7. Shoulder concrete barrier wall has been structurally evaluated to be equivalent or greater in strength to other safety shapes which have been crash tested to NCHRP Report 350, TL-4 requirements.

8. For wall segments constructed with the slip form method, score 3/ 8" deep crack control V-Grooves while the concrete is still plastic and mold them when walls are constructed with the stationary form method. V-Grooves shall be spaced at 20' intervals, the end of the side face grooves shall be in line with the ends of the top face groove and the long dimension of all grooves shall align at 90 degrees to the longitudinal axis of the wall. When wall segments are less than 40' in length, space the V-Groove equally between open joints. Dowel transverse construction joints for abutting segments less than 40' (See DETAIL B).

9. Minimum length of cast-in-place or precast segments is 20 feet.

10. Precast construction is allowed as an alternate to cast-in-place construction.
    a. Wall segments < 40' in length shall be joined by a transverse joint in accordance with DETAIL C. The minimum segment length is 20'.
    b. Bedding of the precast sections shall be facilitated by the use of sand-cement grout or equal method to assure uniform bearing.
    c. Reinforcement may be required for handling stresses.

11. On roadways designated for reverse laning, all downstream ends that are not shielded or outside the clear zone shall be marked by Type 3 Object Markers.

12. For BARRIER WALL INLET details see Index 218 and Index 219. For MEDIAN BARRIER INLETS see Index 217.

13. Concrete barrier wall with NJ Safety Shape may not be substituted for the Standard F Shape Barrier.

10/24/2016 10:43:40 AM

CONCRETE BARRIER WALL TERMINALS

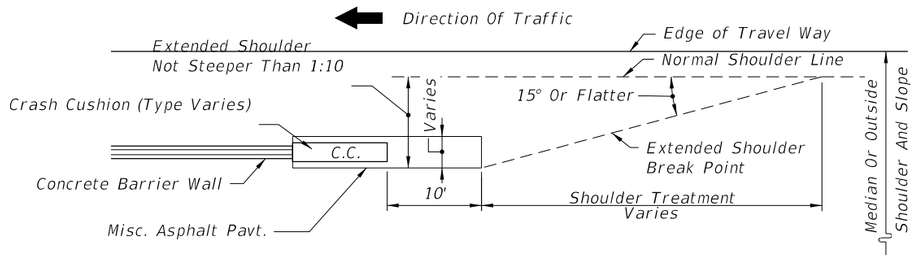

SHOULDER TREATMENT WHEN CRASH CUSHIONS SHIELD CONCRETE BARRIER WALL ENDS LOCATED INSIDE APPROACH CLEAR ZONE OR LATERAL OFFSET

DETAIL A

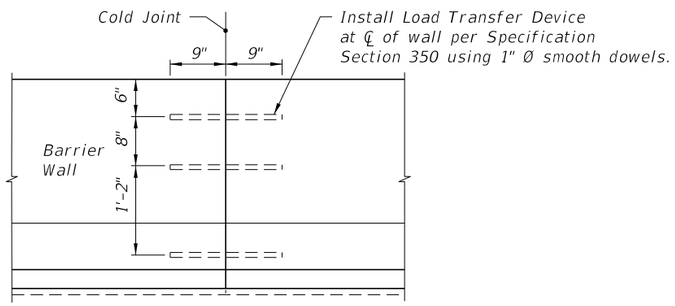

DOWELED TRANSVERSE CONSTRUCTION JOINT WHERE ABUTTING SEGMENT(S) LESS THAN 40' IN LENGTH
(Required on abutting ends of Segments < 40' long)
DETAIL B

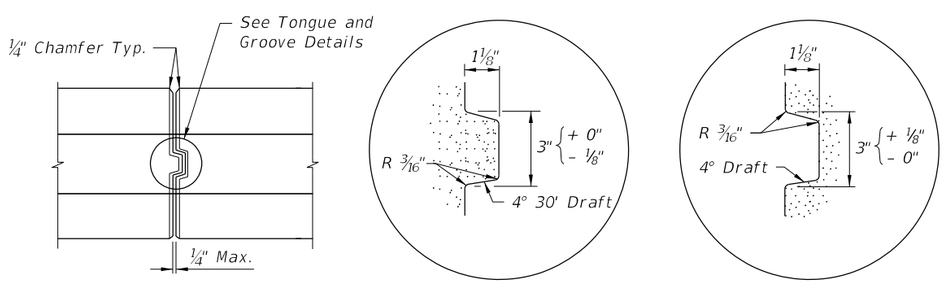

TOP VIEW TONGUE DETAIL GROOVE DETAIL

PRECAST TONGUE AND GROOVE TRANSVERSE JOINT
(Required on abutting ends of Precast Segments ≥ 40' long)
DETAIL C

CONCRETE BARRIER WALL SPECIAL DETAILS

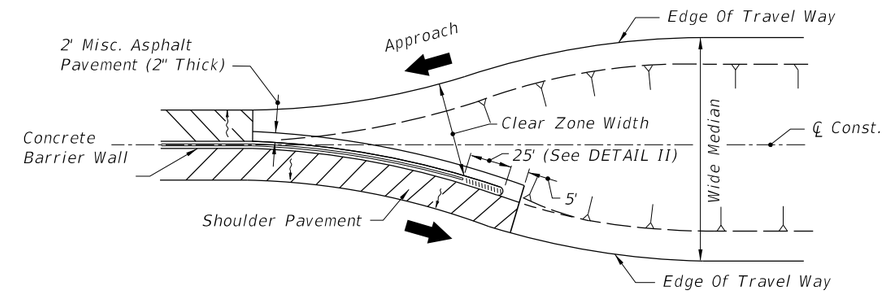

TRANSITION BETWEEN NARROW AND WIDE MEDIANS WHERE END OF BARRIER WALL IS LOCATED OUTSIDE THE APPROACH CLEAR ZONE OR LATERAL OFFSET

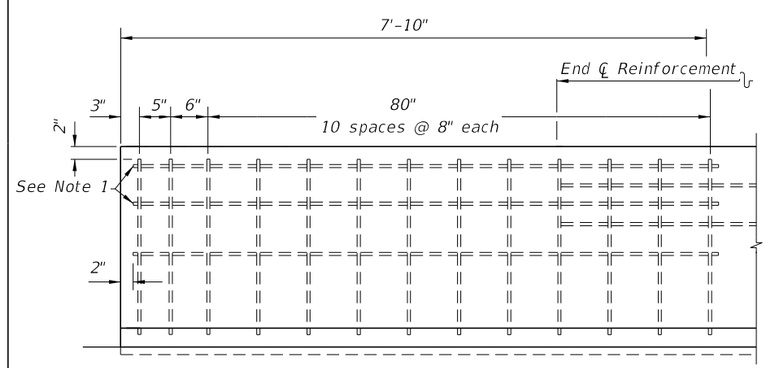

ELEVATION

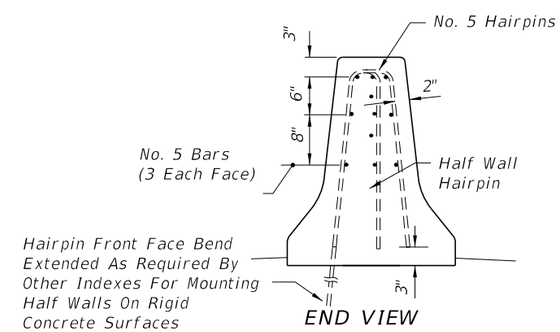

END VIEW

NOTE:
1. Free end reinforcement required for nonreinforced walls at the following locations: All exposed ends; abutting ends of precast segments ≥ 40'; ends with guardrail connections; ends with redirective crash cushion connections; and, ends connecting to bridge traffic rails or other rigid barriers.

FREE END REINFORCEMENT

10/24/2016 10:43:46 AM

LAST REVISION	REVISION	DESCRIPTION:	FY 2017-18 DESIGN STANDARDS	CONCRETE BARRIER WALL	INDEX NO.	SHEET NO.
02/01/16					410	2 of 25

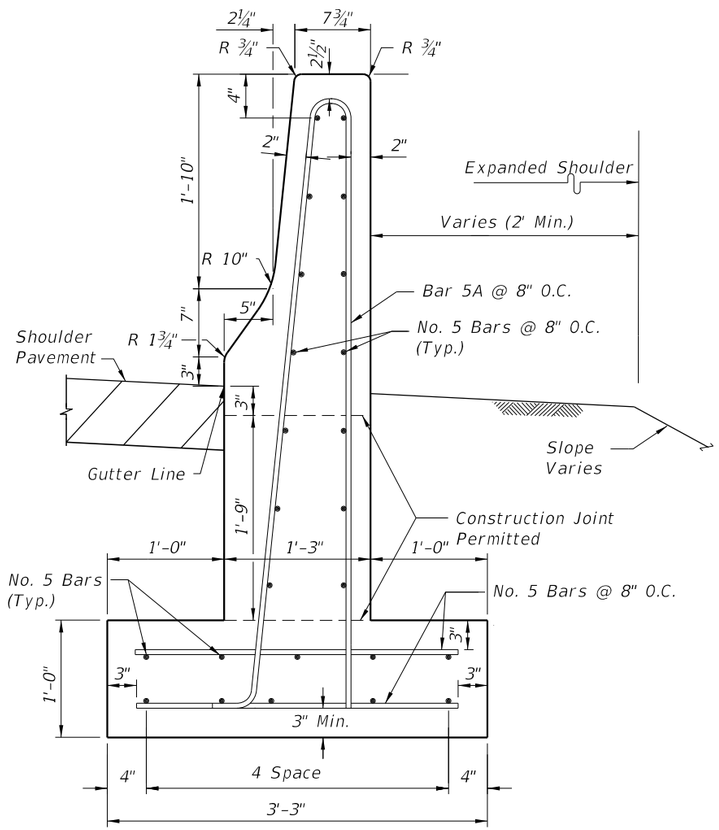

QUANTITIES: Concrete 0.30 CY/LF
Reinforcing Steel 52 LBS/LF

SHOULDER WALL (TYPICAL)

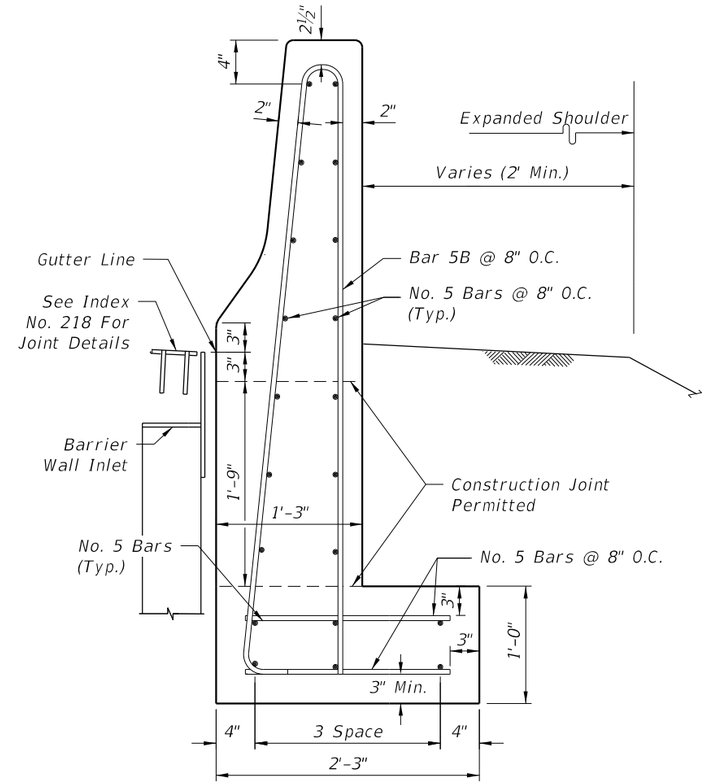

QUANTITIES: Concrete 0.26 CY/LF
Reinforcing Steel 44 LBS/LF

SHOULDER WALL (MODIFIED)

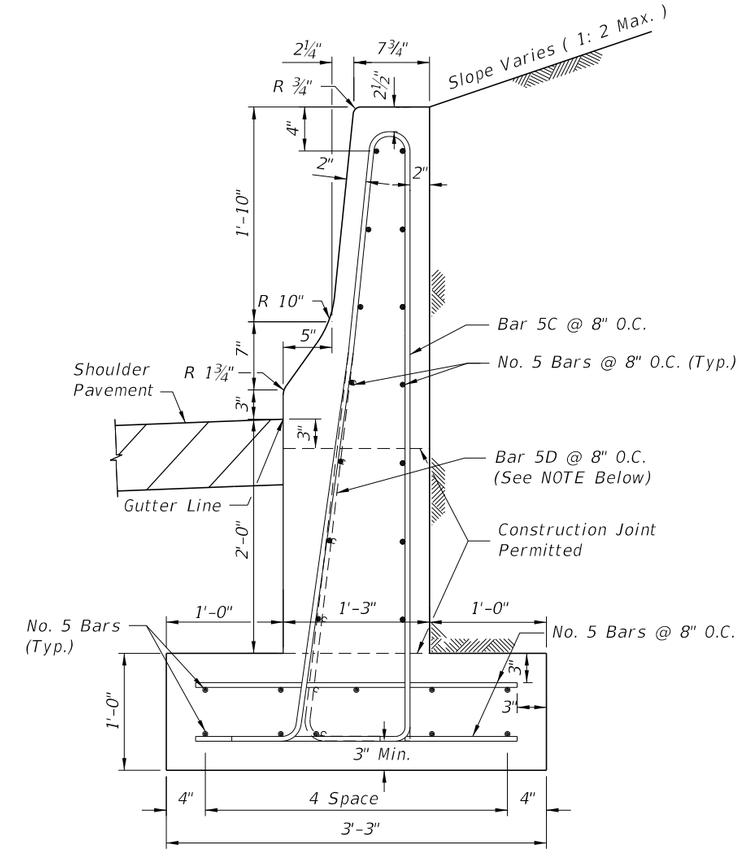

NOTE: Bar 5D Shall Be Used In Lieu of Bar 5C In Areas Where Obstructions Require Localized Omission Of Toe

QUANTITIES:
With Reinforcing Steel (Bar 5C) 55 LBS/LF; Concrete 0.27 CY/LF

With Reinforcing Steel (Bar 5D) 52 LBS/LF; Concrete 0.23 CY/LF

SHOULDER WALL (RETAINING)

NOTES:

1. Reduce the vertical steel spacing to 4 inches O.C. a distance of 4 feet for each side of all cold or expansion joints.
2. Unless otherwise noted, Minimum Segment Wall Length is 20 LF.
3. All walls may be made up of segments 20' or more in length provided the segments are joined by a transverse joint in accordance with the CONCRETE BARRIER WALL SPECIAL DETAILS, DETAIL B.
4. Quantities shown are for information only. Barrier wall inlets (Index 218) shall be isolated from the barrier wall stem and footing by 1" expansion material.
5. All longitudinal reinforcement to be continuous or spliced No. 5 bars. Lap splices a minimum of 2'-0".
6. For additional information on Bars 5A, 5B, 5C and 5D, see BAR BENDING DIAGRAMS.

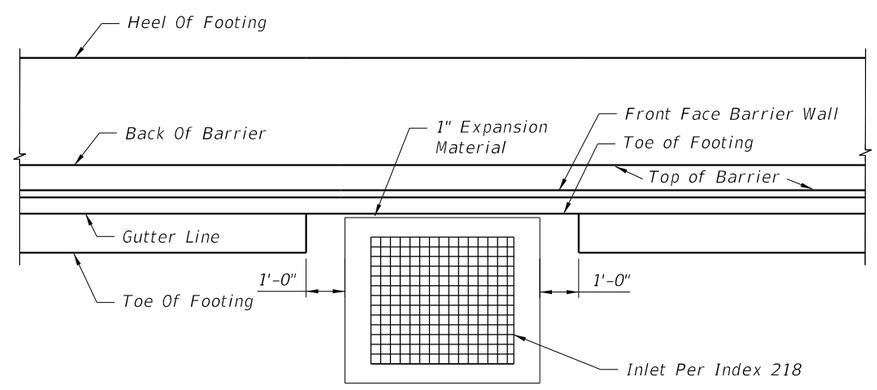

PLAN VIEW
SHOULDER WALL FOOTING
TRANSITION AT INLETS

REINFORCED CONCRETE SHOULDER WALL

10/24/2016 10:43:49 AM

LAST REVISION	REVISION	DESCRIPTION:			INDEX NO.	SHEET NO.
07/01/15			FDOT FY 2016-17 DESIGN STANDARDS	CONCRETE BARRIER WALL	410	3 of 25

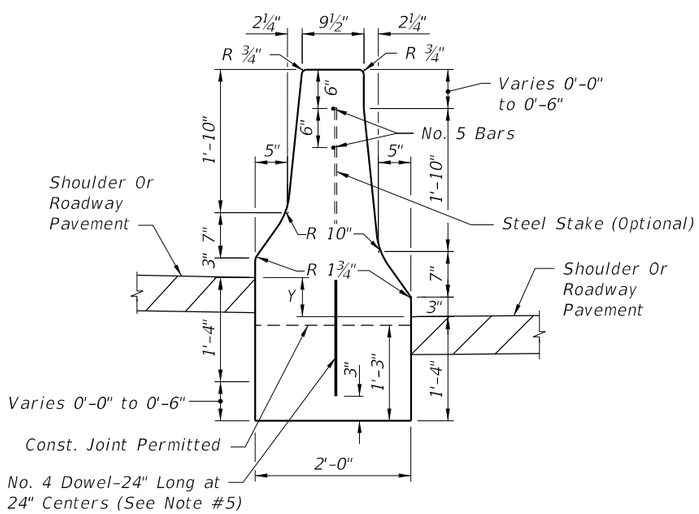

F-SHAPE MEDIAN BARRIER
WHEN Y IS LESS THAN OR EQUAL TO 6 INCHES

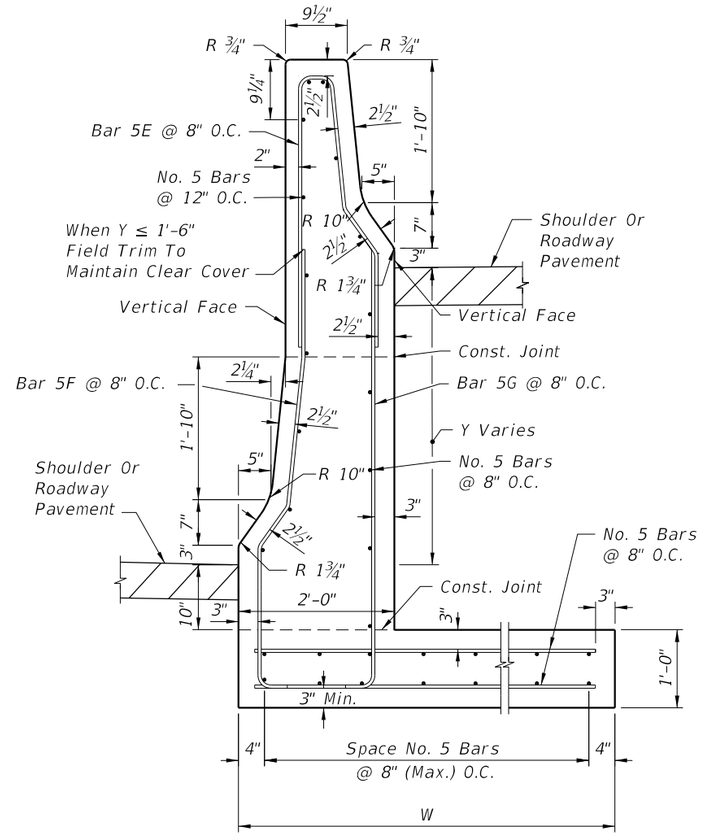

CANTILEVER WALL
SUPERELEVATED SECTION

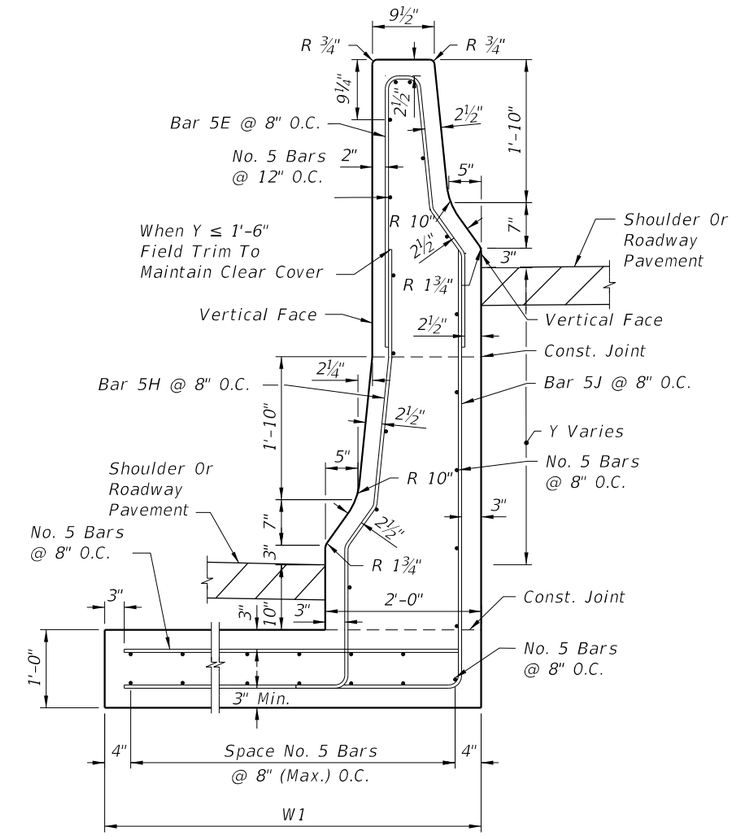

L-WALL
SUPERELEVATED SECTION

DIMENSIONS TABLE								
Cantilever Wall	Height Y	1'-0"	1'-6"	2'-0"	2'-6"	3'-0"	3'-6"	4'-0"
	Width W	2'-6"	2'-9"	3'-0"	3'-3"	3'-3"	3'-6"	3'-6"
Min. Segment Wall Length		29'	27'	25'	23'	24'	22'	24'
L-Wall	Height Y	1'-0"	1'-6"	2'-0"	2'-6"	3'-0"	3'-6"	4'-0"
	Width W1	2'-6"	2'-9"	3'-0"	3'-3"	3'-3"	3'-6"	3'-6"
Min. Segment Wall Length		26'	24'	22'	21'	22'	21'	24'

NOTES:

1. Unless the plans stipulate a specific wall type, either the Cantilever Wall or the L-Wall may be constructed at the Contractor's option.
2. Reduce the vertical steel spacing to 4 inches O.C. a distance of 4 feet for each side of all cold or expansion joints.
3. All longitudinal reinforcement to be continuous or spliced No. 5 bars. Lap splices a minimum of 2'-0".
4. For additional information on Bars 5E, 5F, 5G, 5H and 5J, see BAR BENDING DIAGRAMS.
5. No. 4 dowel may be extended to provide steel stake. Omit dowel bars when construction joint is not used.

MEDIAN BARRIER WALL FOR SUPERELEVATED SECTIONS WITH VARIABLE ROADWAY PROFILE GRADE LINES

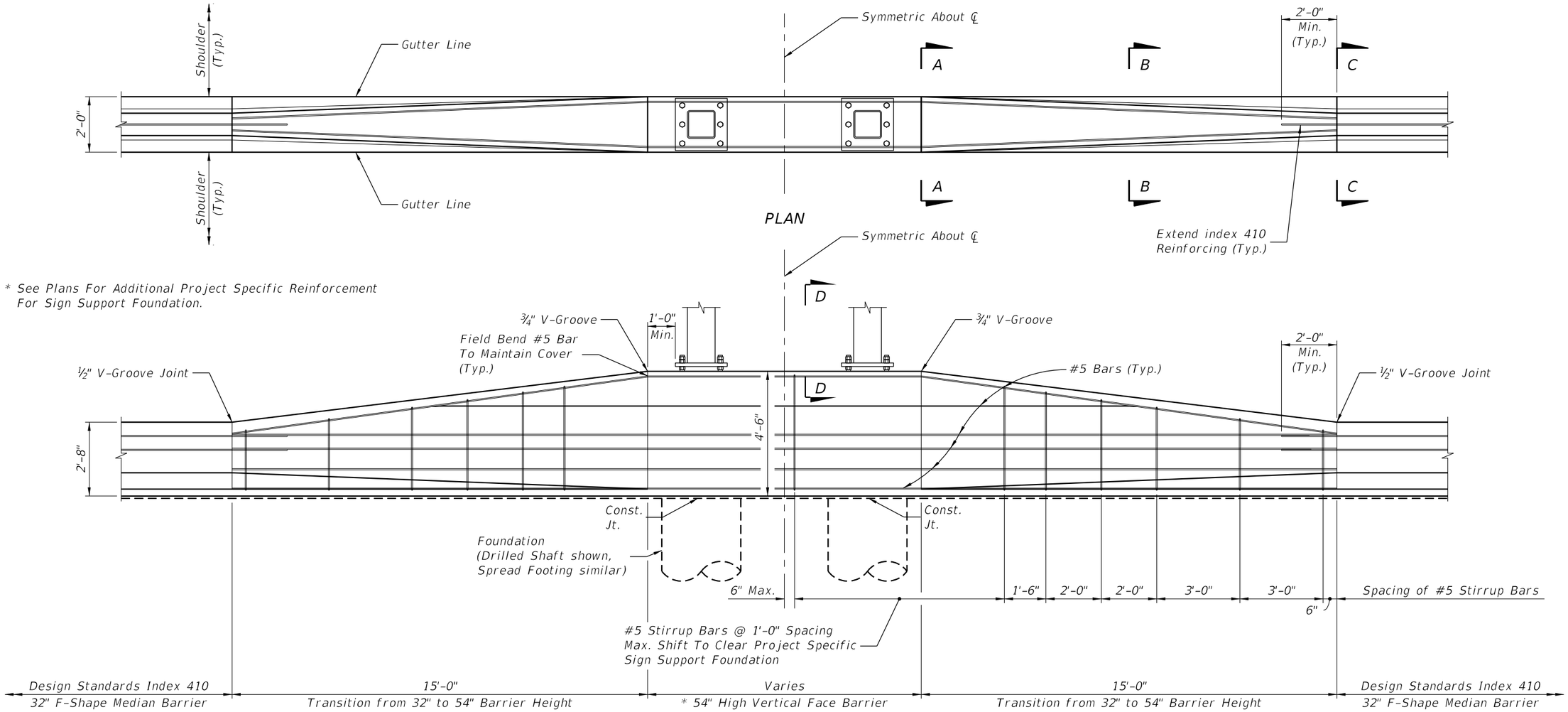

ELEVATION

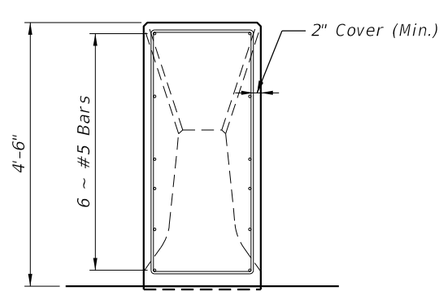

SECTION A-A

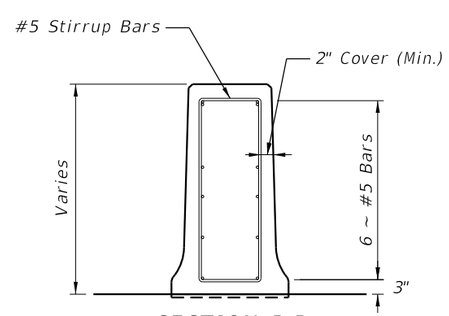

SECTION B-B

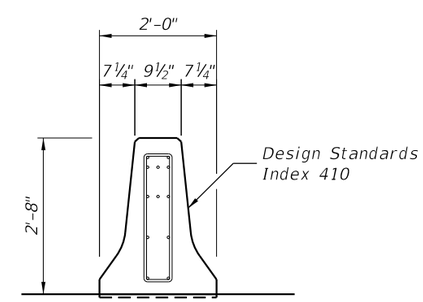

SECTION C-C

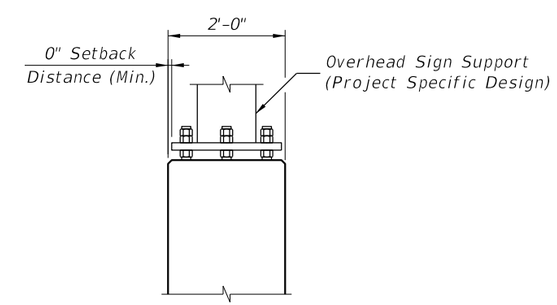

SECTION D-D

LARGE SIGN MEDIAN BARRIER MOUNTED SIGN SUPPORT TRANSITION (OPTION 1)

10/24/2016 10:43:54 AM

LAST REVISION	REVISION	DESCRIPTION:			INDEX NO.	SHEET NO.
07/01/15			FDOT FY 2017-18 DESIGN STANDARDS	CONCRETE BARRIER WALL	410	5 of 25

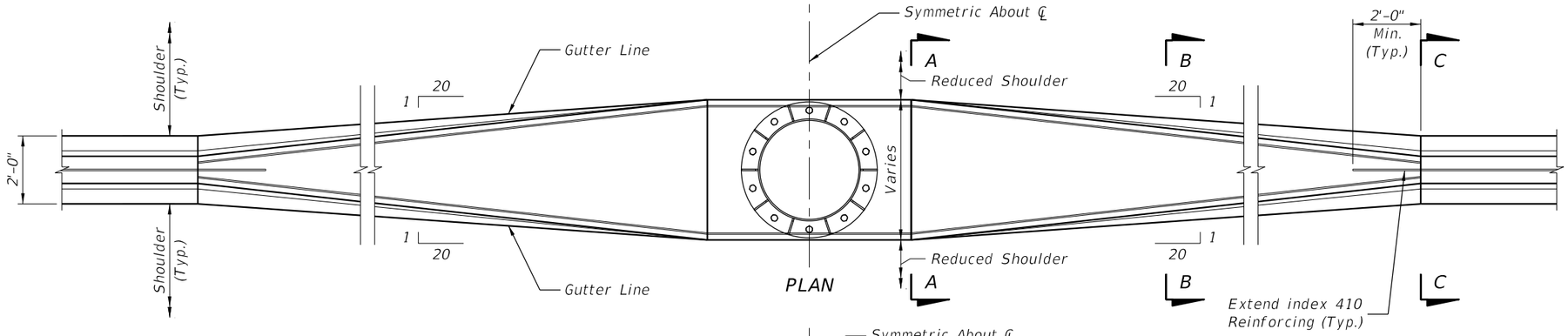

PLAN

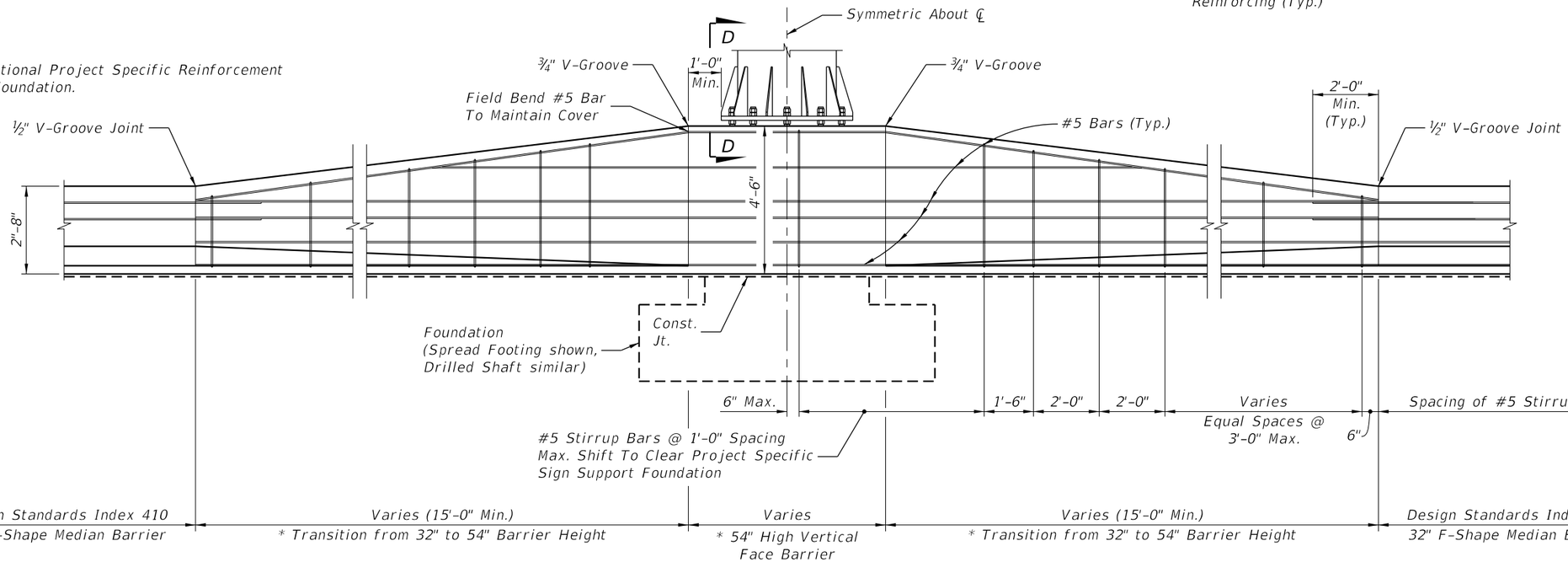

* See Plans For Additional Project Specific Reinforcement For Sign Support Foundation.

ELEVATION

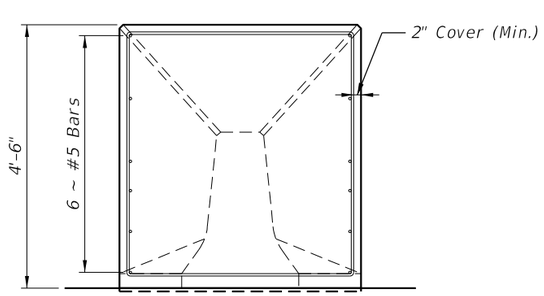

SECTION A-A

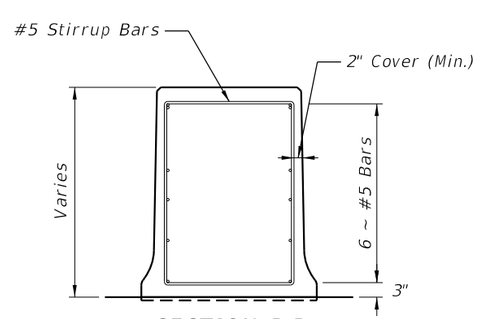

SECTION B-B

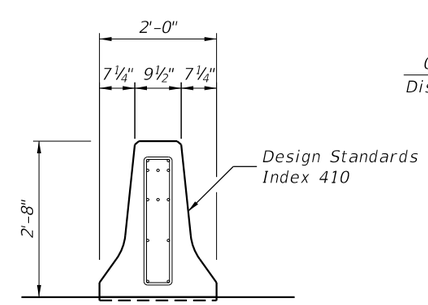

SECTION C-C

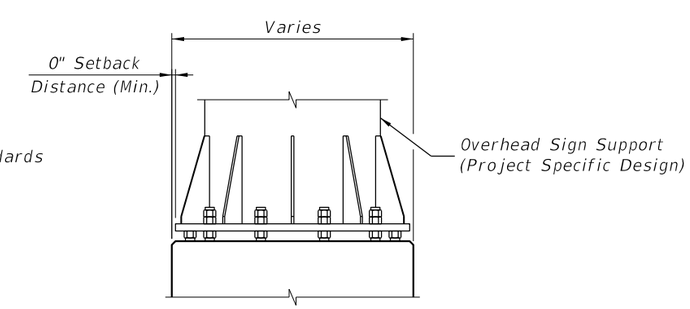

SECTION D-D

LARGE SIGN MEDIAN BARRIER MOUNTED SIGN SUPPORT TRANSITION (OPTION 2)

LAST REVISION	REVISION	DESCRIPTION:			INDEX NO.	SHEET NO.
07/01/15			FDOT FY 2017-18 DESIGN STANDARDS	CONCRETE BARRIER WALL	410	6 of 25

10/24/2016 10:43:56 AM

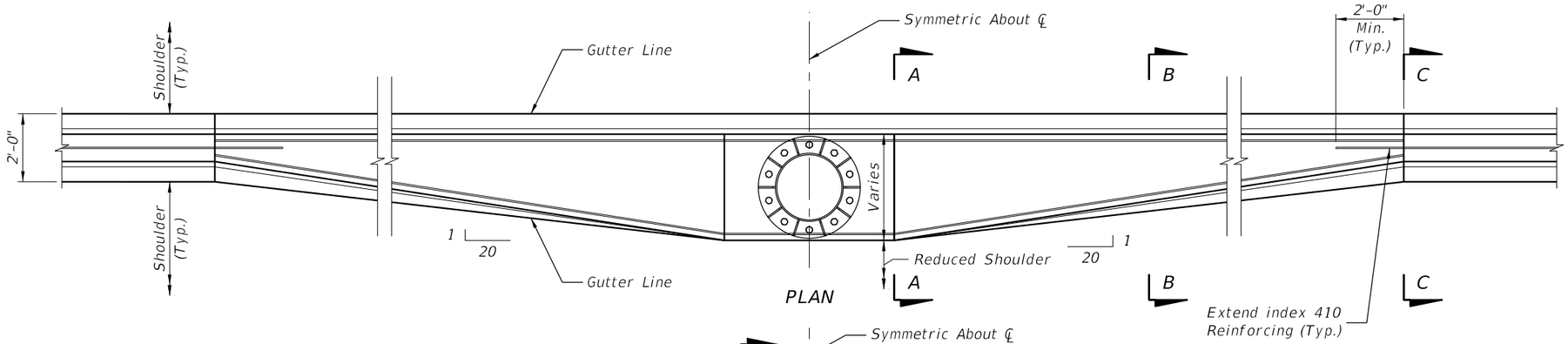

PLAN

* See Plans For Additional Project Specific Reinforcement For Sign Support Foundation.

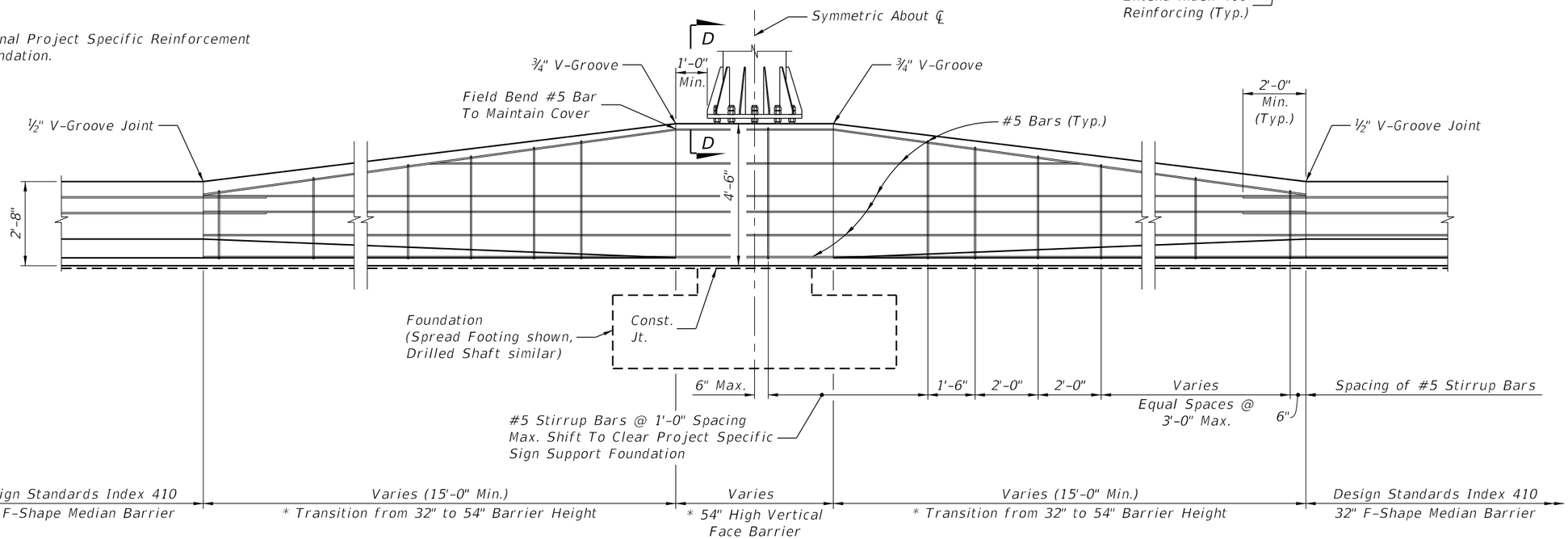

ELEVATION

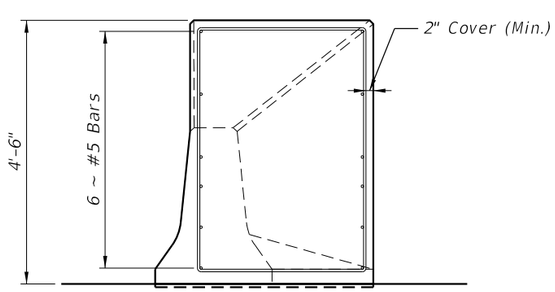

SECTION A-A

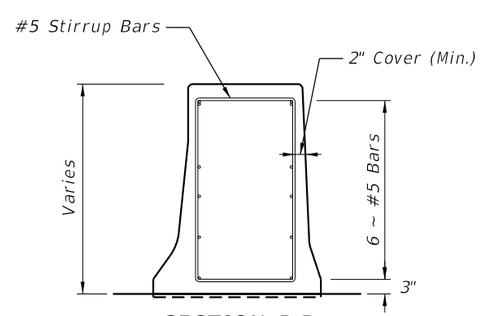

SECTION B-B

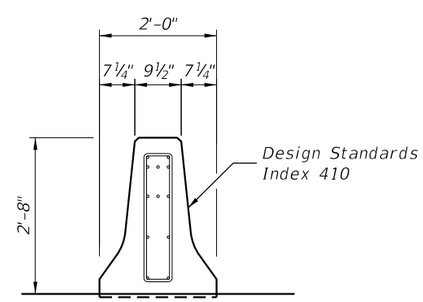

SECTION C-C

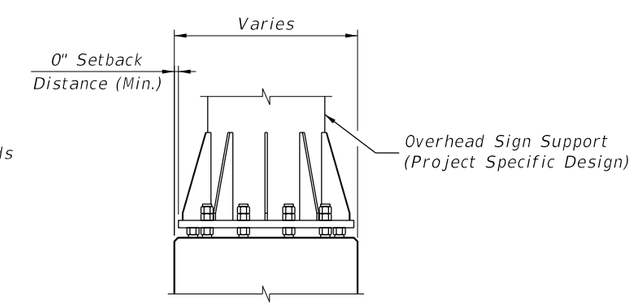

SECTION D-D

LARGE SIGN MEDIAN BARRIER MOUNTED SIGN SUPPORT TRANSITION (OPTION 3)

10:43:59 AM

10/24/2016

LAST REVISION	REVISION	DESCRIPTION:			INDEX NO.	SHEET NO.
07/01/15			FDOT FY 2017-18 DESIGN STANDARDS	CONCRETE BARRIER WALL	410	7 of 25

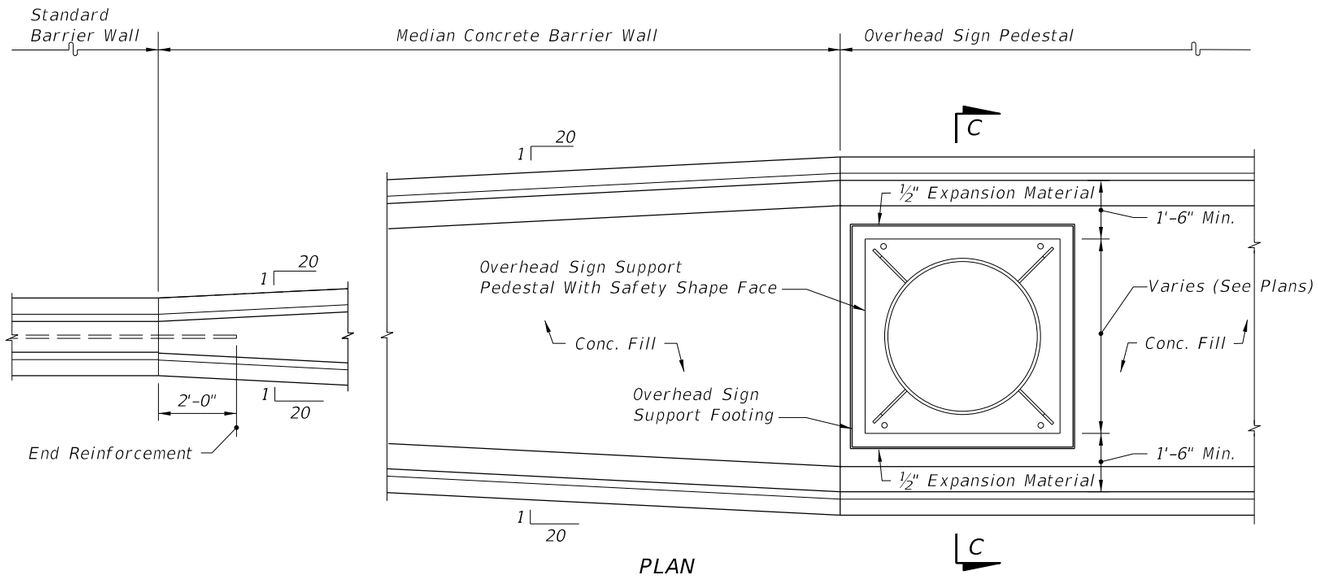

PLAN

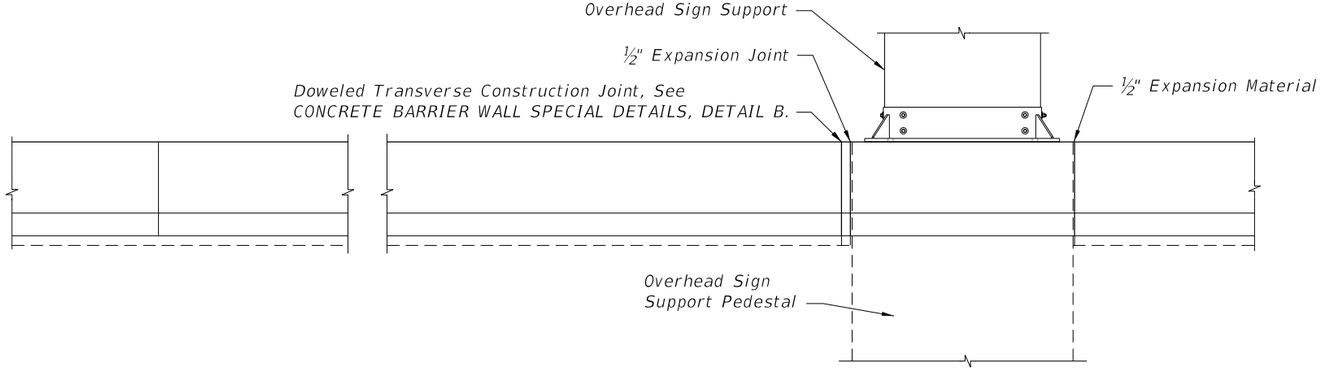

ELEVATION

NOTE:
1. Footing Extended As Called For On Other Indexes Or As Called For In The Plans

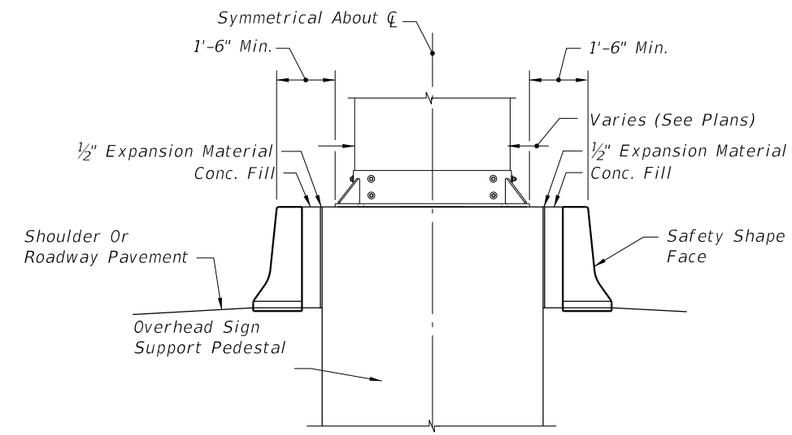

SECTION CC

CONCRETE MEDIAN BARRIER WALL TRANSITIONS AT OVERHEAD SIGN SUPPORTS

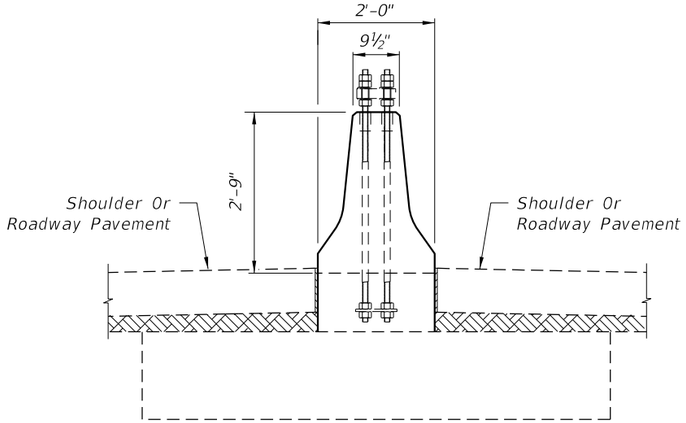

END VIEW
SPREAD FOOTING OPTION

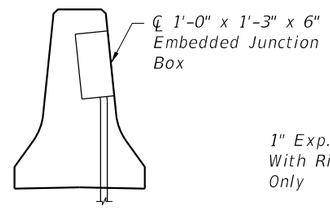

TRANSVERSE SECTION
INSTALLATION

SPREAD FOOTING AND CYLINDRICAL NOTES

The Reinforcement Details And Dimensions For Both The Spread Footing And Cylindrical Foundations Can Be Found In Index 17515.

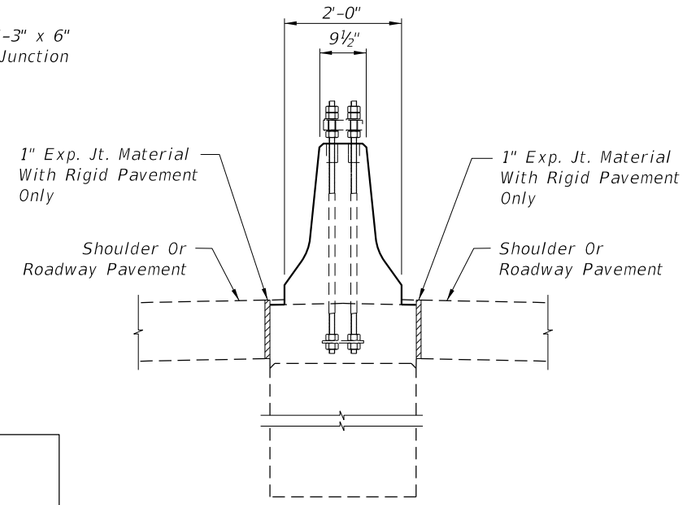

END VIEW
CYLINDRICAL OPTION

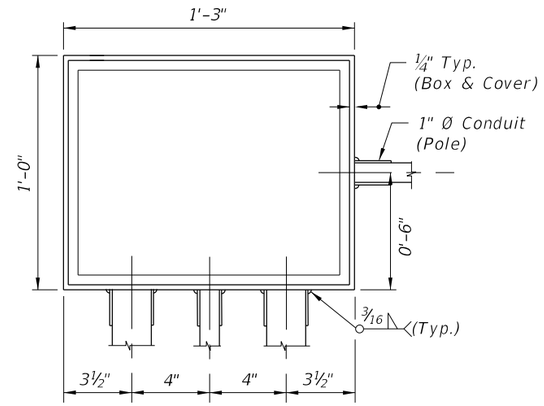

FRONT VIEW
EMBEDDED JUNCTION BOX

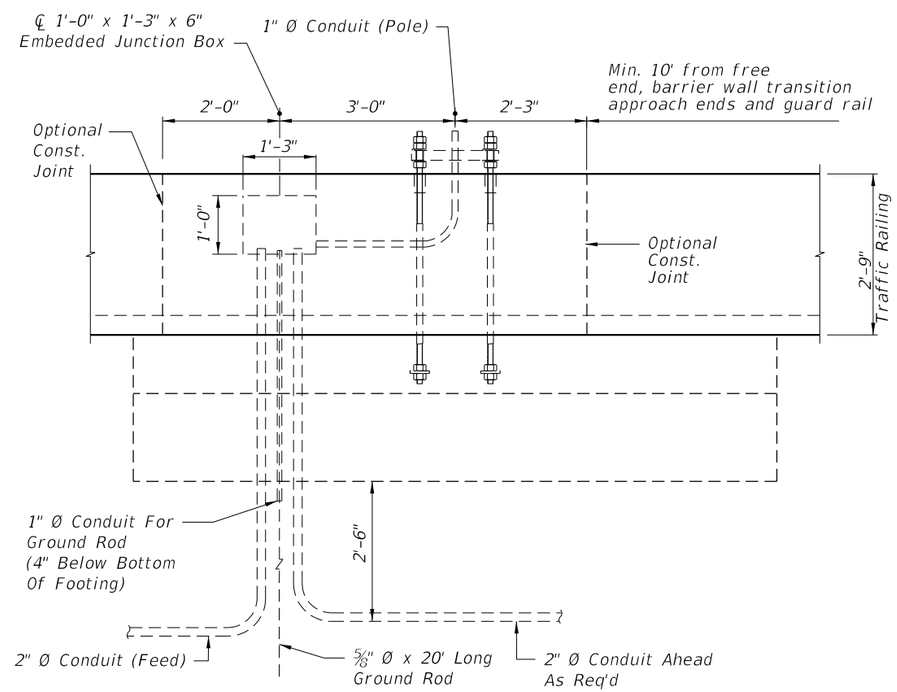

ELEVATION
SPREAD FOOTING OPTION

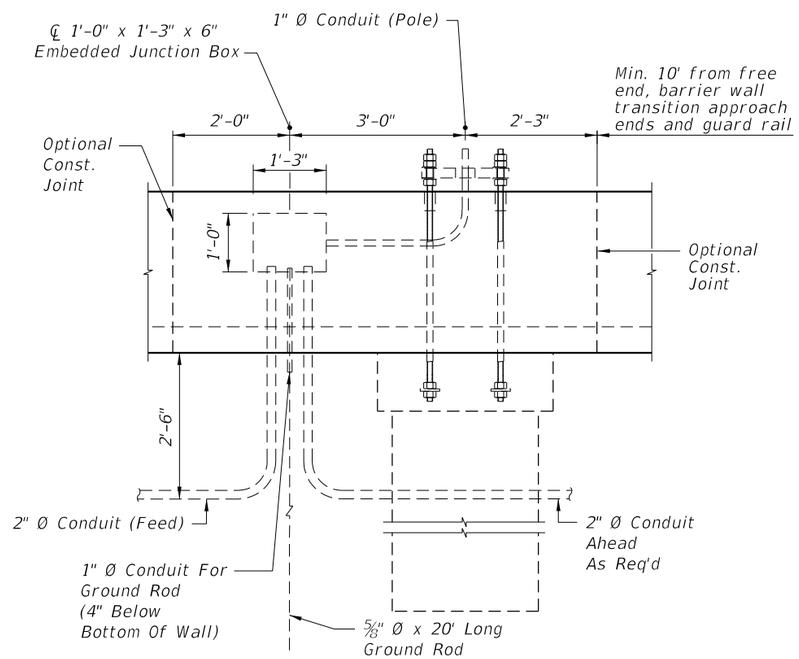

ELEVATION
CYLINDRICAL OPTION

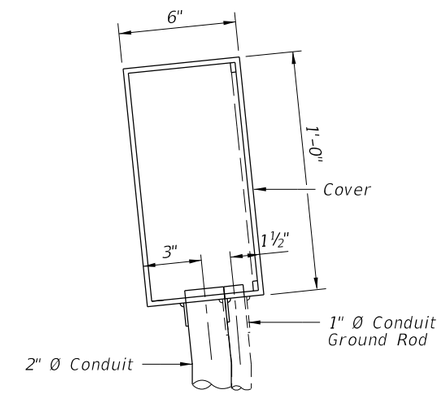

SIDE VIEW
EMBEDDED JUNCTION BOX

NOTES:

1. Embedded junction boxes are to be fabricated from steel conforming to ASTM A36 and be hot-dip galvanized after fabrication. All seams shall be continuously welded and ground smooth. A neoprene gasket shall be attached to the box to provide a watertight cover. The cover screws shall be fully galvanized.
2. Remove excess concrete while green and hand form chamfers.
3. Embedded junction box complete and conduit risers are incidental to the construction and cost of the barrier wall; there is to be no separate compensation for the box, risers or installation unless specifically called for in the plans.

MEDIAN BARRIER MOUNTED LIGHT POLE DETAILS

EMBEDDED JUNCTION BOX - ELECTRICAL

10/24/2016 10:44:04 AM

LAST REVISION	REVISION	DESCRIPTION:			INDEX NO.	SHEET NO.
07/01/14			FY 2017-18 DESIGN STANDARDS	CONCRETE BARRIER WALL	410	9 of 25

THIS PAGE INTENTIONALLY LEFT BLANK

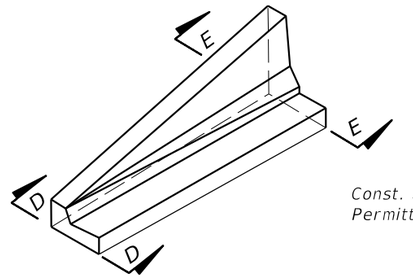

WITH AND WITHOUT UTILITY STRIP
PICTORIAL VIEW

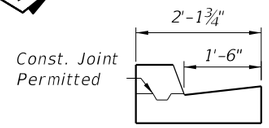

SECTION DD

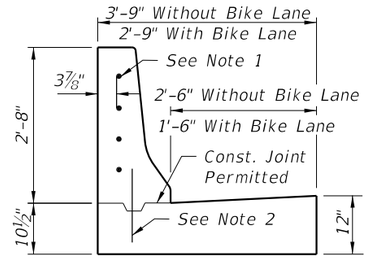

SECTION EE

NOTES:

1. Transition Segments Shall Be Doweled Into The End Of The Barrier Wall In The Following Manner: Four 1" diameter holes 6" deep on 6" centers shall be drilled in the end of the barrier and No. 6 bars 15" long set in an Adhesive Bonded Material System per Standard Specification Section 416. The ends of the dowels extending into the transition segment shall be wrapped with one layer of ASTM D226, Type I (15 lb.) asphalt-saturated organic felt with the ends crimped.
2. When Construction Joints Are Utilized For Transition Segment Construction The Stem Shall Be Doweled To The Footing In The Following Manner: Five No. 5 bars 15" long shall be embedded 7" into the footing. The dowels shall be spaced 15" on centers with the first dowel located 12" from the barrier wall. Dowels may be placed within or adjacent to the keyway.
3. The detail BRIDGE WITH BIKE LANE can be superimposed over the details: WITH UTILITY STRIPS AND WITH BIKE LANE and WITHOUT UTILITY STRIPS AND WITH BIKE LANE. The detail BRIDGE WITHOUT BIKE LANE can be superimposed over the details: WITH UTILITY STRIPS AND WITHOUT BIKE LANE and WITHOUT UTILITY STRIPS AND WITHOUT BIKE LANE.
4. For SECTION QQ, see CURB AND GUTTER WITHOUT ADJACENT BICYCLE LANE. For SECTION TT, see CURB AND GUTTER WITH ADJACENT BICYCLE LANE.

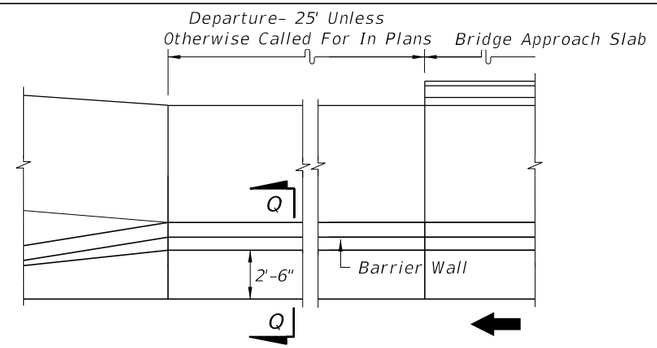

BRIDGE WITHOUT BIKE LANE

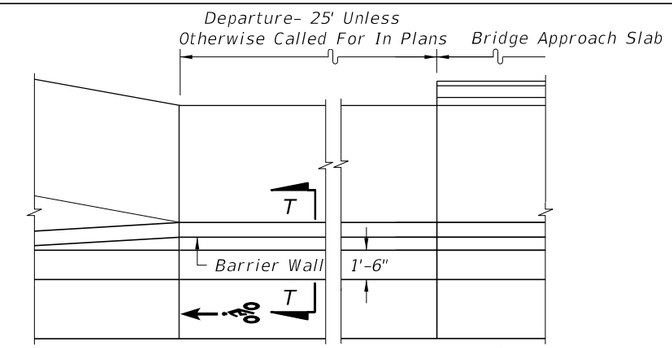

BRIDGE WITH BIKE LANE

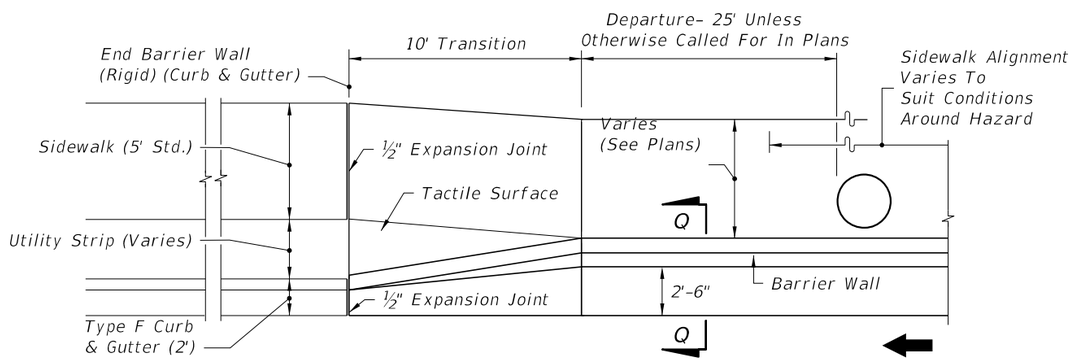

WITH UTILITY STRIP AND WITHOUT BIKE LANE

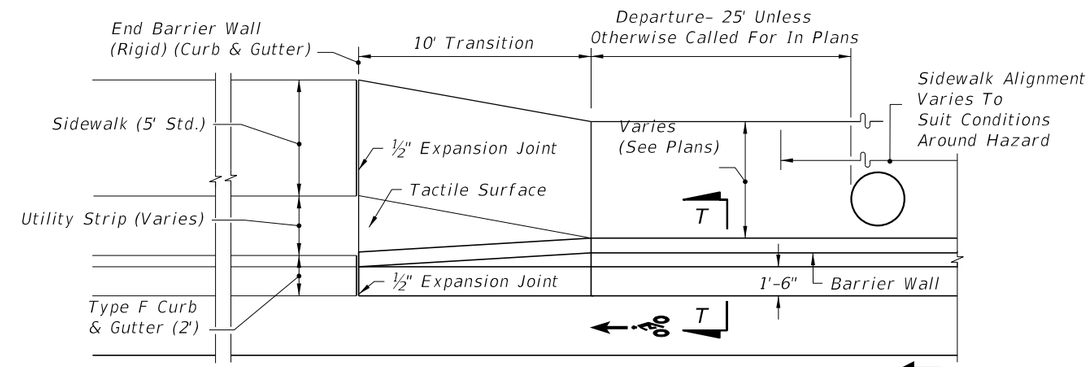

WITH UTILITY STRIP AND WITH BIKE LANE

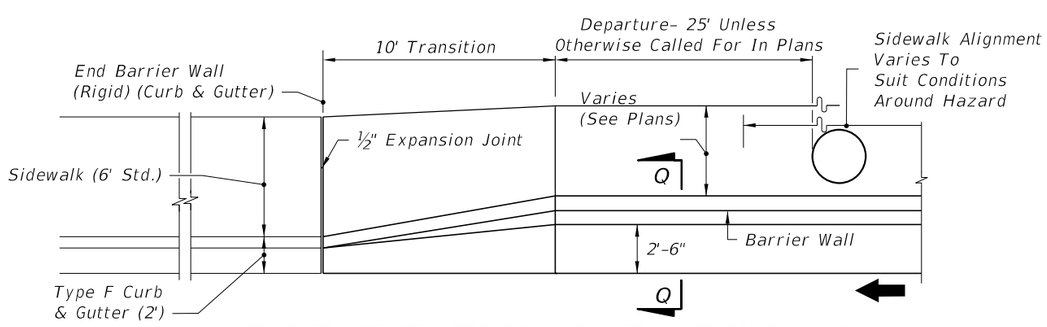

WITHOUT UTILITY STRIPS AND WITHOUT BIKE LANE

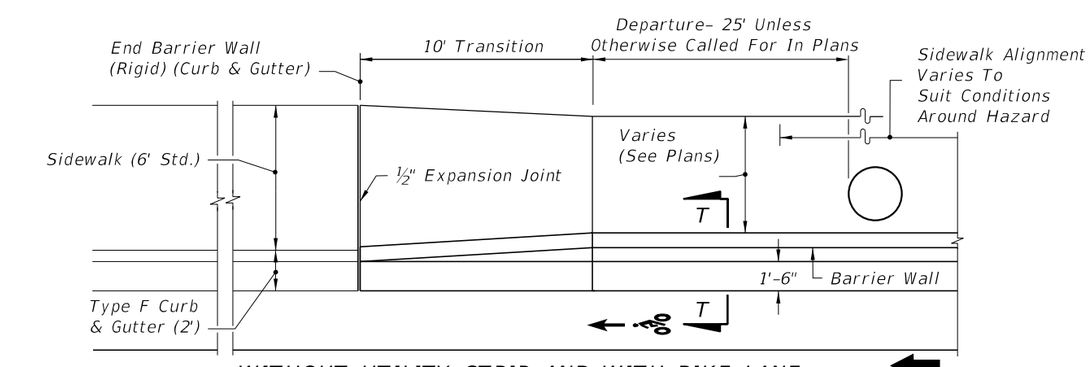

WITHOUT UTILITY STRIP AND WITH BIKE LANE

HAZARD 4' OR LESS FROM FACE OF CURB

ONE-WAY CURB AND GUTTER DEPARTURES

10/24/2016 10:44:09 AM

LAST REVISION	REVISION	DESCRIPTION:			INDEX NO.	SHEET NO.
11/01/16			FDOT FY 2017-18 DESIGN STANDARDS	CONCRETE BARRIER WALL	410	11 of 25

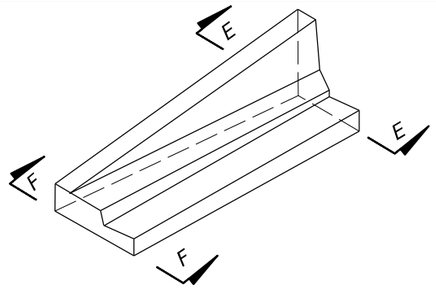

WITH AND WITHOUT UTILITY STRIP
PICTORIAL VIEW

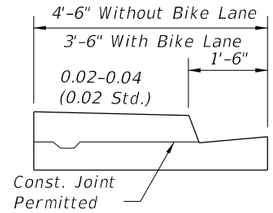

SECTION FF

NOTES:

1. For X=Length of advancement in feet for near and opposing lanes and for sectional details see CURB AND GUTTER WITHOUT ADJACENT BICYCLE LANE.
2. The 1'-6" and 2'-6" offsets to toe of barrier wall cannot be reduced to accommodate hazards; however, hazards located in the stem of the wall may be accommodated by the details on HAZARD PENETRATION INTO STEM OF RIGID CONCRETE BARRIER WALLS; AND SHOULDER BARRIER WALL WHEN OFFSET FROM ABOVE GROUND HAZARD < 1'-6" AND THE DESIGN SPEED ≤ 45 MPH.
3. The detail BRIDGE WITH BIKE LANE can be superimposed over the details: WITH UTILITY STRIPS AND WITH BIKE LANE and WITHOUT UTILITY STRIPS AND WITH BIKE LANE. The detail BRIDGE WITHOUT BIKE LANE can be superimposed over the details: WITH UTILITY STRIPS AND WITHOUT BIKE LANE and WITHOUT UTILITY STRIPS AND WITHOUT BIKE LANE.
4. For SECTION EE, see ONE-WAY CURB AND GUTTER DEPARTURES.
5. For SECTION QQ, see CURB AND GUTTER WITHOUT ADJACENT BICYCLE LANE.
   For Section TT, see CURB AND GUTTER WITH ADJACENT BICYCLE LANE.

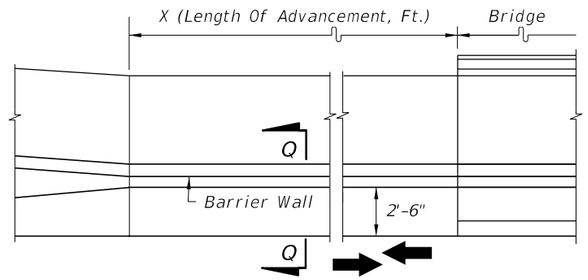

BRIDGE WITHOUT BIKE LANE

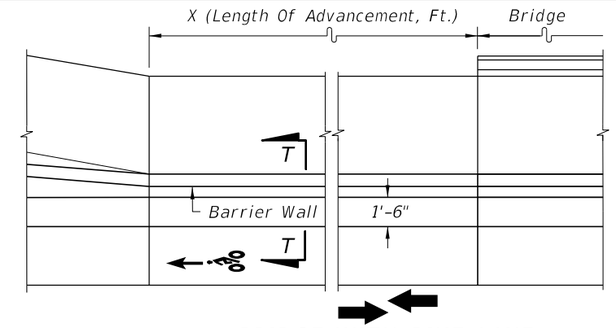

BRIDGE WITH BIKE LANE

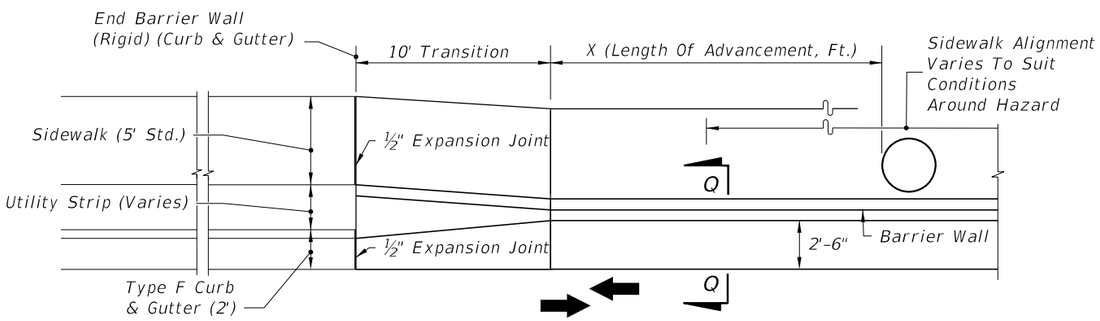

WITH UTILITY STRIP AND WITHOUT BIKE LANE

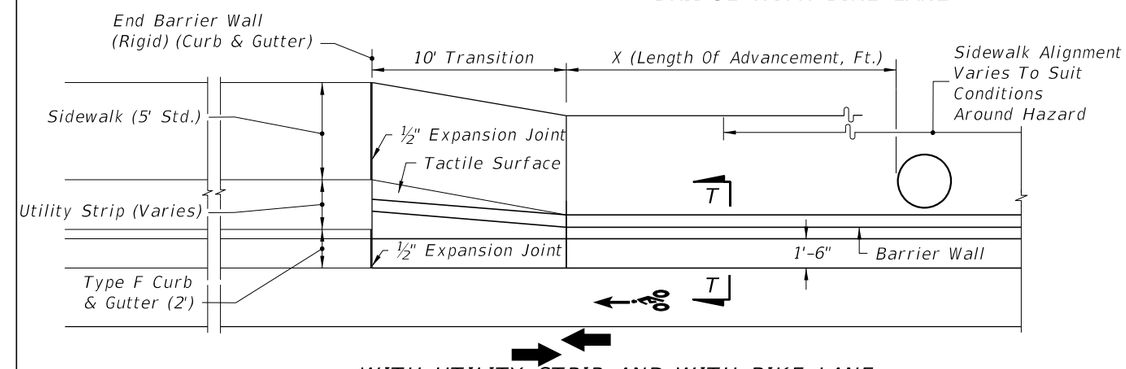

WITH UTILITY STRIP AND WITH BIKE LANE

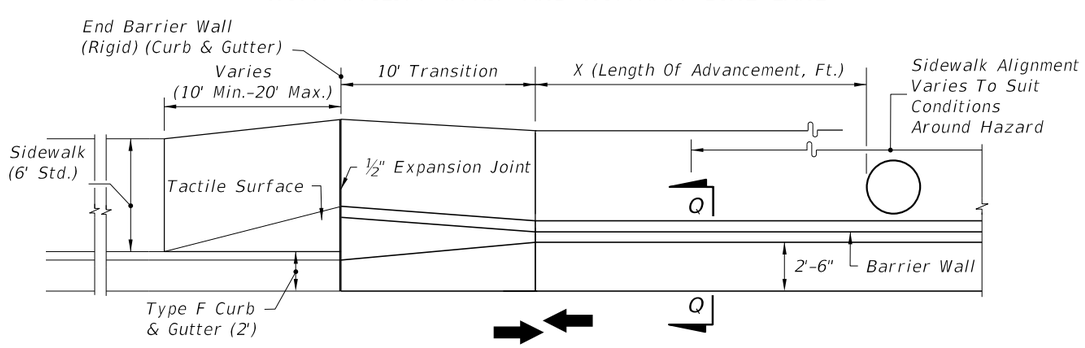

WITHOUT UTILITY STRIP AND WITHOUT BIKE LANE

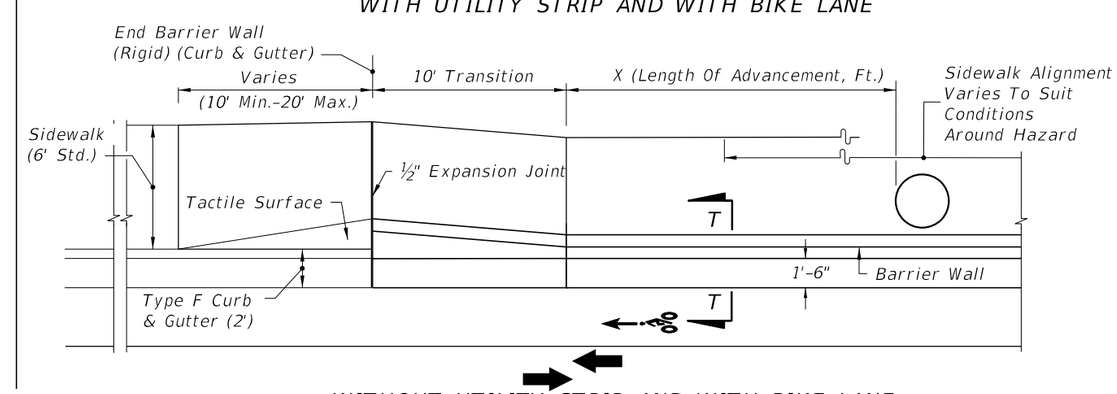

WITHOUT UTILITY STRIP AND WITH BIKE LANE

HAZARD 4' OR LESS FROM FACE OF CURB

TWO-WAY CURB AND GUTTER TRAFFIC DEPARTURE

10/24/2016 10:44:12 AM

LAST REVISION	REVISION	DESCRIPTION:			INDEX NO.	SHEET NO.
07/01/14			FDOT FY 2017-18 DESIGN STANDARDS	CONCRETE BARRIER WALL	410	12 of 25

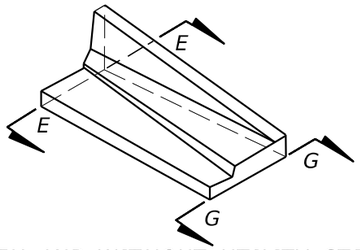

WITH AND WITHOUT UTILITY STRIP
PICTORIAL VIEW

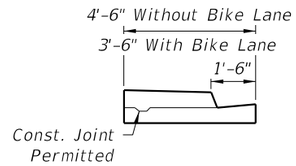

SECTION GG

NOTES:

1. For SECTION EE, see ONE-WAY CURB AND GUTTER DEPARTURES.
2. For SECTION QQ, see CURB AND GUTTER WITHOUT ADJACENT BICYCLE LANE.
   For SECTION TT, see CURB AND GUTTER WITH ADJACENT BICYCLE LANE.
3. The detail BRIDGE WITH BIKE LANE can be superimposed over the details: WITH UTILITY STRIPS AND WITH BIKE LANE and WITHOUT UTILITY STRIPS AND WITH BIKE LANE. The detail BRIDGE WITHOUT BIKE LANE can be superimposed over the details: WITH UTILITY STRIPS AND WITHOUT BIKE LANE and WITHOUT UTILITY STRIPS AND WITHOUT BIKE LANE.

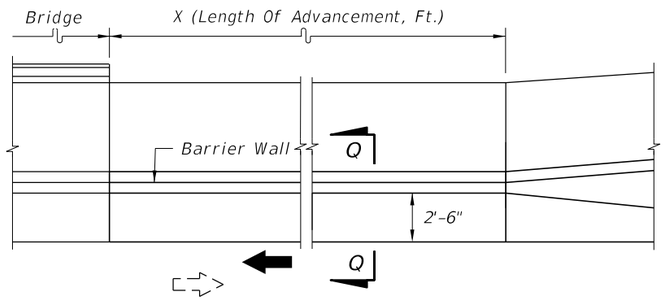

BRIDGE WITHOUT BIKE LANE

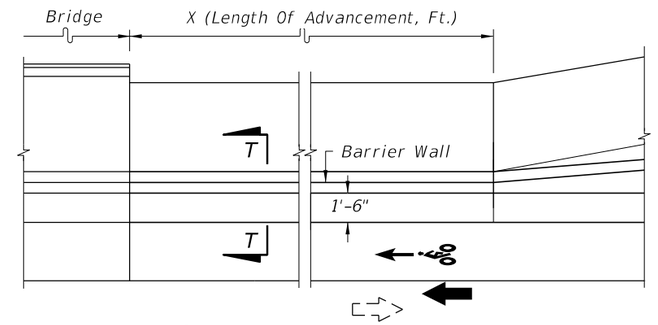

BRIDGE WITH BIKE LANE

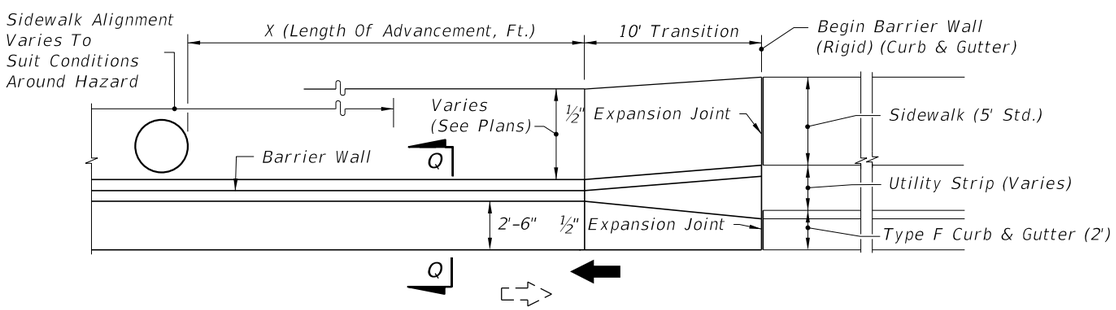

WITH UTILITY STRIP AND WITHOUT BIKE LANE

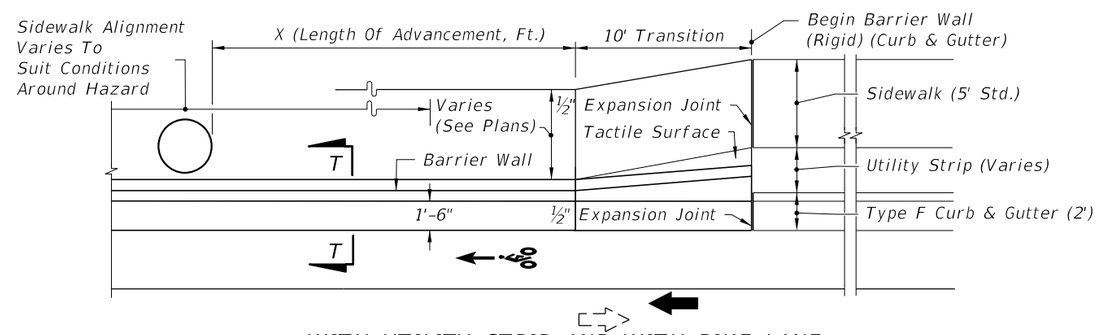

WITH UTILITY STRIP AND WITH BIKE LANE

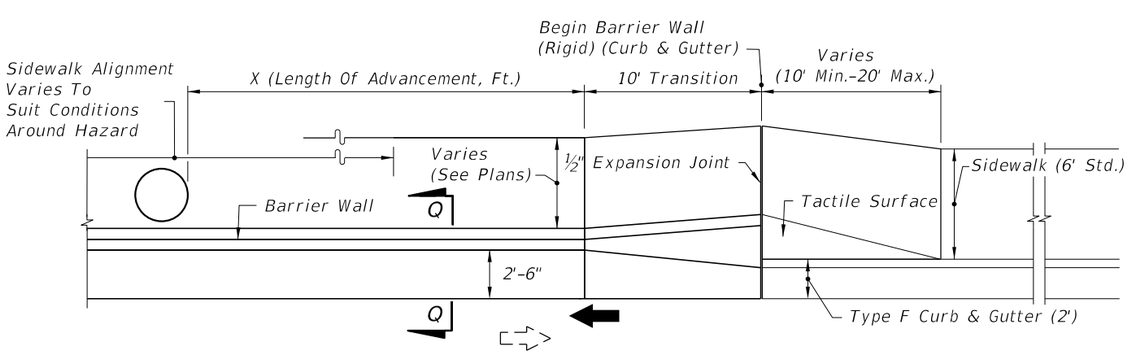

WITHOUT UTILITY STRIP AND WITHOUT BIKE LANE

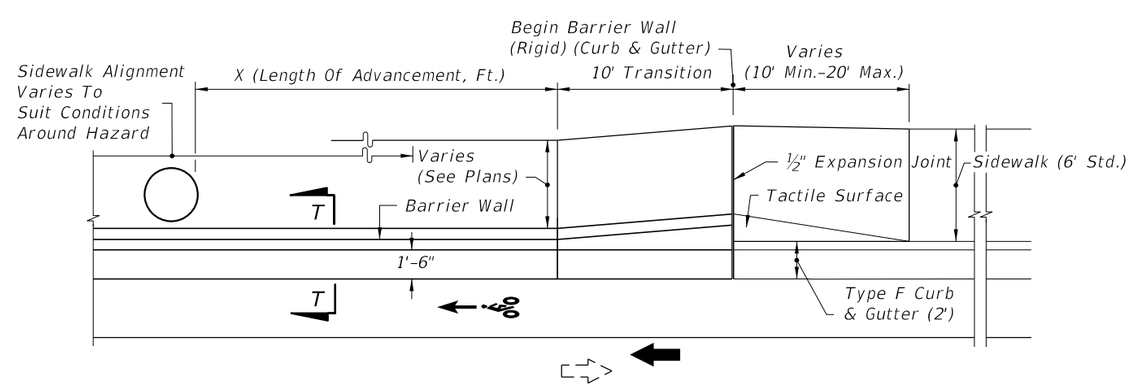

WITHOUT UTILITY STRIP AND WITH BIKE LANE

HAZARD 4' OR LESS FROM FACE OF CURB

ONE-WAY AND TWO-WAY CURB AND GUTTER NEAR LANE APPROACHES TRAFFIC (UNDIVIDED)

10/24/2016 10:44:14 AM

LAST REVISION	REVISION	DESCRIPTION:			INDEX NO.	SHEET NO.
07/01/14			FDOT FY 2017-18 DESIGN STANDARDS	CONCRETE BARRIER WALL	410	13 of 25

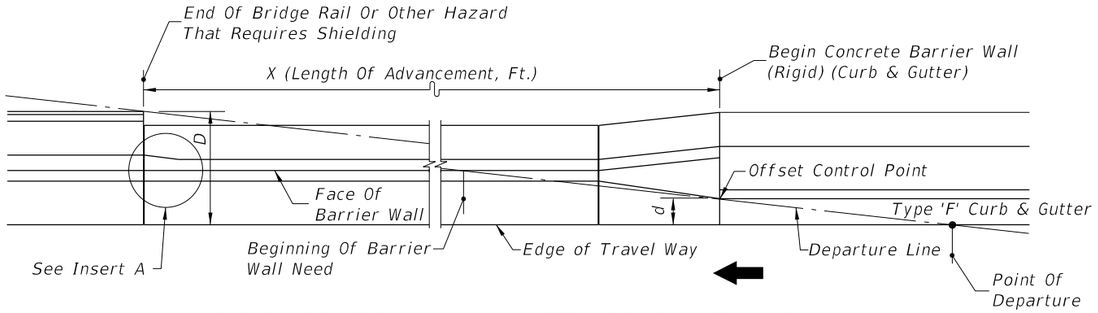

RIGHT SIDE APPROACH SHOWN - LEFT SIDE OPPOSITE HAND

NEAR LANE APPROACH

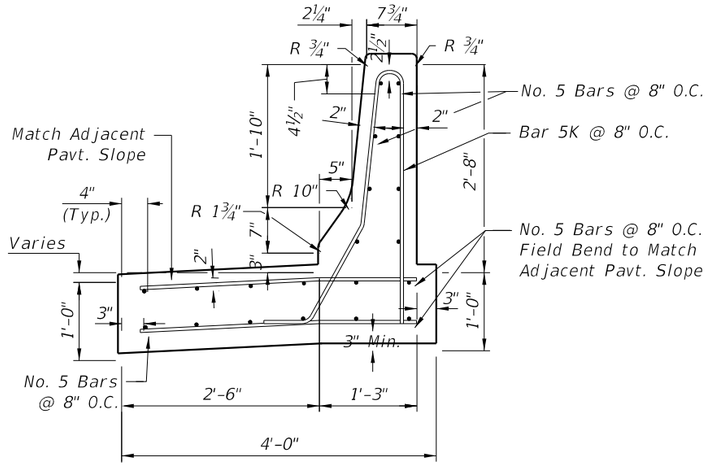

QUANTITIES:
Concrete: 0.24 CY/LF; Reinforcing Steel: 26 LBS/LF

SECTION QQ (FOR HIGH SIDE)

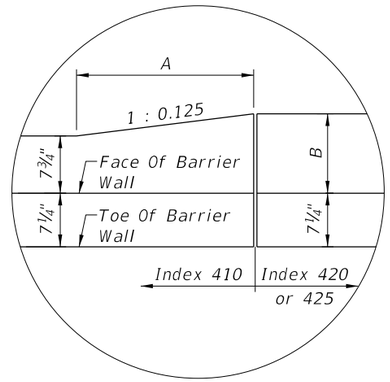

INSERT A

Transition Concrete Barrier Wall (Index 410) to Mate With Back Side of F Shape Bridge Traffic Railing (Index 420/425).

For Opposing Lane Approach (Near Lane Approach Opposite Hand)

Index	A	B
420	2'-0"	10¾"
425	3'-0"	1'-0¼"

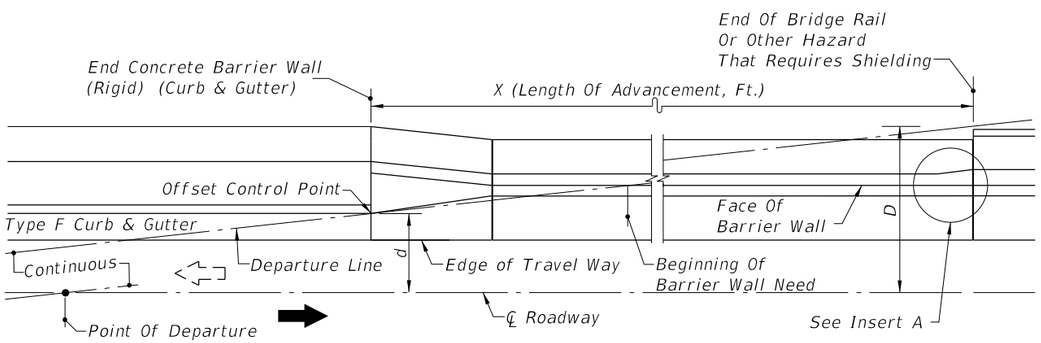

OPPOSING LANE APPROACH

WITH OR WITHOUT UTILITY STRIP - UTILITY STRIP SHOWN
For Applications, see CURB AND GUTTER (WITH AND WITHOUT) UTILITY STRIP AND WITHOUT ADJACENT BIKE LANE

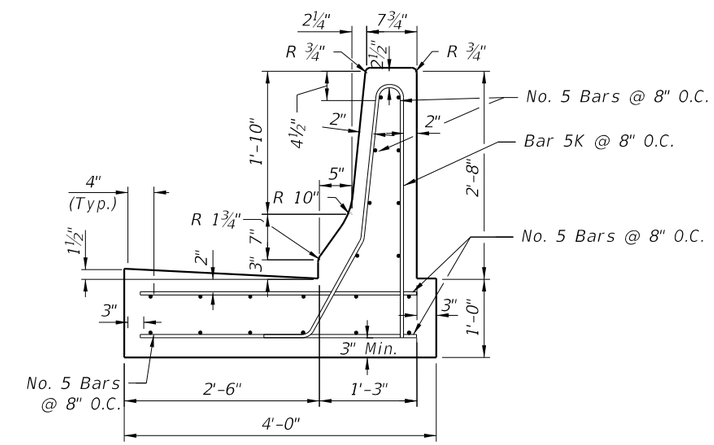

QUANTITIES:
Concrete: 0.24 CY/LF; Reinforcing Steel: 26 LBS/LF

SECTION QQ (FOR LOW SIDE)

Design Speed mph	Length Of Advancement, Ft. (X)
≤45	= 16 (D-d)
Note: The minimum length of advancement for both near and opposing lane approaches is 40'.	

EQUATION VARIABLES:

D= Distance in feet from near edge of the near approach traffic lane to back of hazard or clear zone width whichever is lesser. For left side hazards and clear zones on two-way undivided facilities D is measured from the inside edge of the near approach traffic lane.

d= Distance in feet from near edge of the near approach traffic lane to the face of barrier (at offset control point). For left side hazards on two-way undivided facilities d is measured from the inside edge of the nearest opposing traffic lane.

LENGTH OF ADVANCEMENT

NOTES:

1. Reduce the vertical steel spacing to 4 inches O.C. a distance of 4 feet for each side of all cold or expansion joints.
2. All longitudinal reinforcement to be continuous or spliced No. 5 bars. Lap splices a minimum of 2'-0".
3. Transverse expansion joints are to be constructed at the juncture of wall transitions and curb and gutter, and at intervals so that spacing will not exceed 100'.
4. For Concrete Barrier Wall Inlet details with Rigid Curb and Gutter applications, see Index No. 219.
5. Minimum Segment Wall Length = 20 LF.
6. For additional information on Bar 5K, see BAR BENDING DIAGRAM.

CURB AND GUTTER WITHOUT ADJACENT BICYCLE LANE

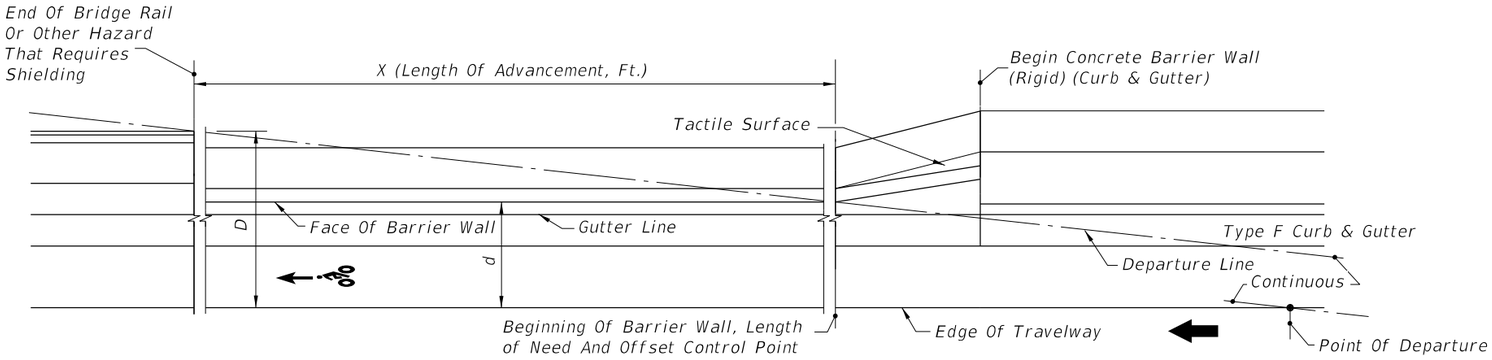

RIGHT SIDE APPROACH SHOWN - LEFT SIDE OPPOSITE HAND

NEAR LANE APPROACH

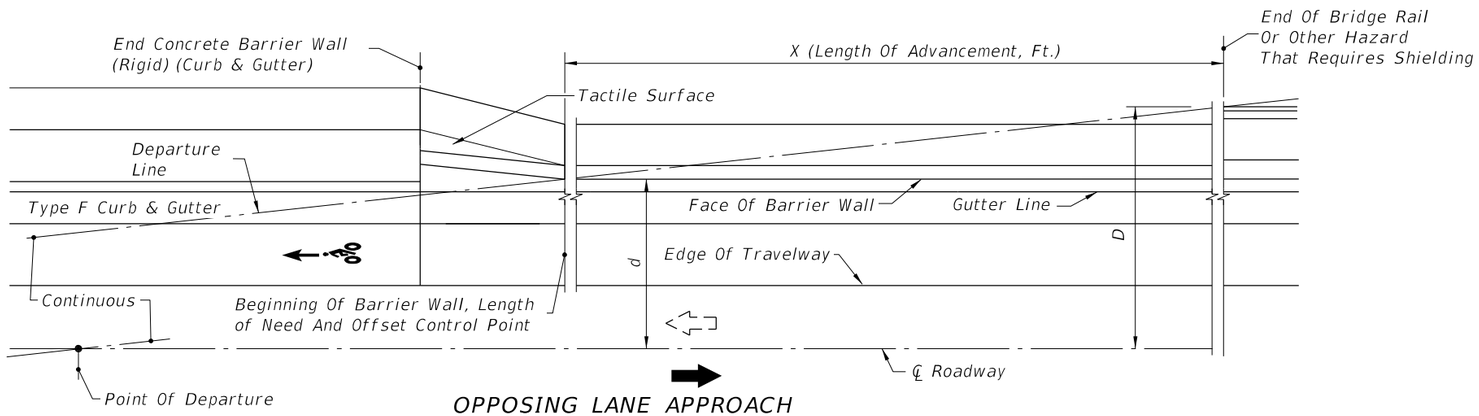

OPPOSING LANE APPROACH

WITH OR WITHOUT UTILITY STRIP - UTILITY STRIP SHOWN
For Applications, see CURB AND GUTTER (WITH AND WITHOUT UTILITY
STRIP AND ADJACENT BIKE LANE FOR APPLICATIONS

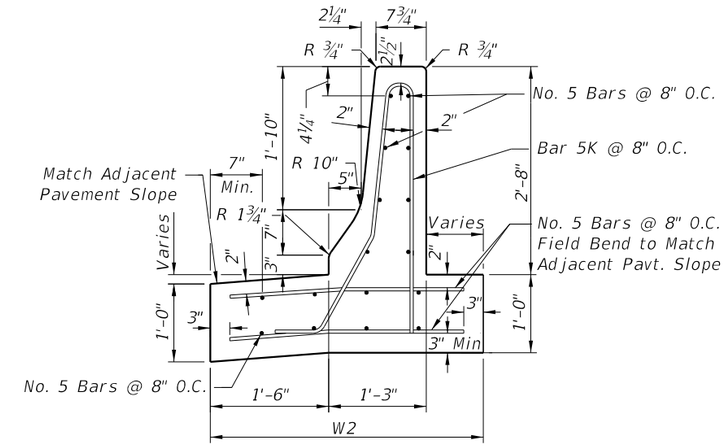

SECTION TT
(FOR HIGH SIDE)

QUANTITIES			
Length Of Barrier Wall (LF)	W2	Concrete CY/LF	Reinforcing Steel LBS/LF
≥ 30'	3'-3"	0.21	24
26' to 29'	3'-6"	0.22	24

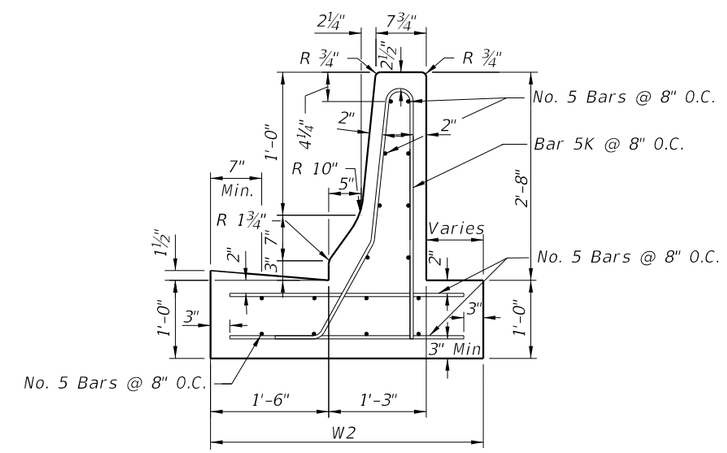

SECTION TT
(FOR LOW SIDE)

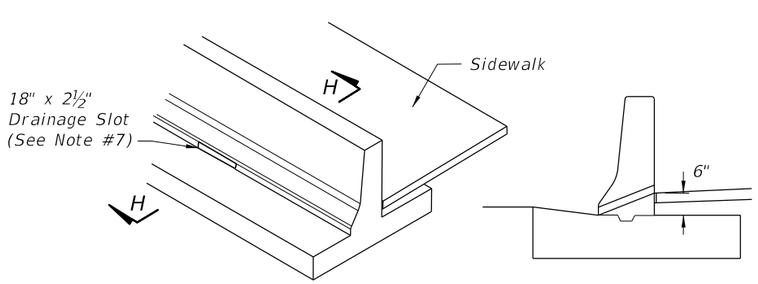

PICTORIAL VIEW

SECTION HH

SIDEWALK DRAINAGE SLOT FOR
BARRIER WALL (RIGID) (CURB & GUTTER)

NOTES:

1. Reduce the vertical steel spacing to 4 inches O.C. a distance of 4 feet for each side of all cold or expansion joints.
2. All longitudinal reinforcement to be continuous or spliced No. 5 bars. Lap splices a minimum of 2'-0".
3. Transverse expansion joints are to be constructed at the juncture of wall transitions and curb and gutter, and at intervals so that spacing will not exceed 100'.
4. For Concrete Barrier Wall Inlet details with Rigid Curb and Gutter applications, see Index No. 219.
5. Minimum Segment Wall Length = 20 LF.
6. For additional information on Bar 5K, see BAR BENDING DIAGRAM.
7. Drainage slots shall be located at all low points along the sidewalk and unless otherwise shown in the plans, slots shall be spaced at intervals not exceeding 50' in fill sections and 20' cut sections. Slots shall be located such that only two bars are cut away or deleted in front and back lines of vertical reinforcement. On each side of Drainage slots, vertical and horizontal bars shall be placed to provide 2" concrete cover.

CURB AND GUTTER WITH ADJACENT BICYCLE LANE

THIS PAGE INTENTIONALLY LEFT BLANK

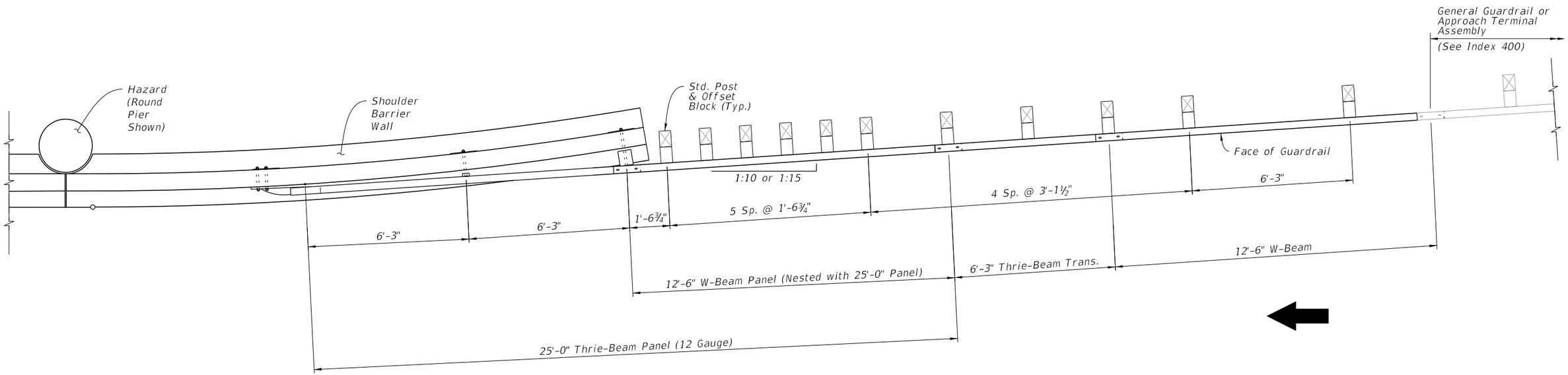

GUARDRAIL CONNECTING PANELS AND POST SPACING

NOTES:

1. For additional connection details for guardrail to barrier wall, work with Sheet 18 and Index 411.
2. For component details including Standard Posts and Panels, see Index 400.
3. For connecting General Guardrail and Approach Terminal details, see Index 400.

GUARDRAIL APPROACH TRANSITION TO CURVED SHOULDER BARRIER WALL

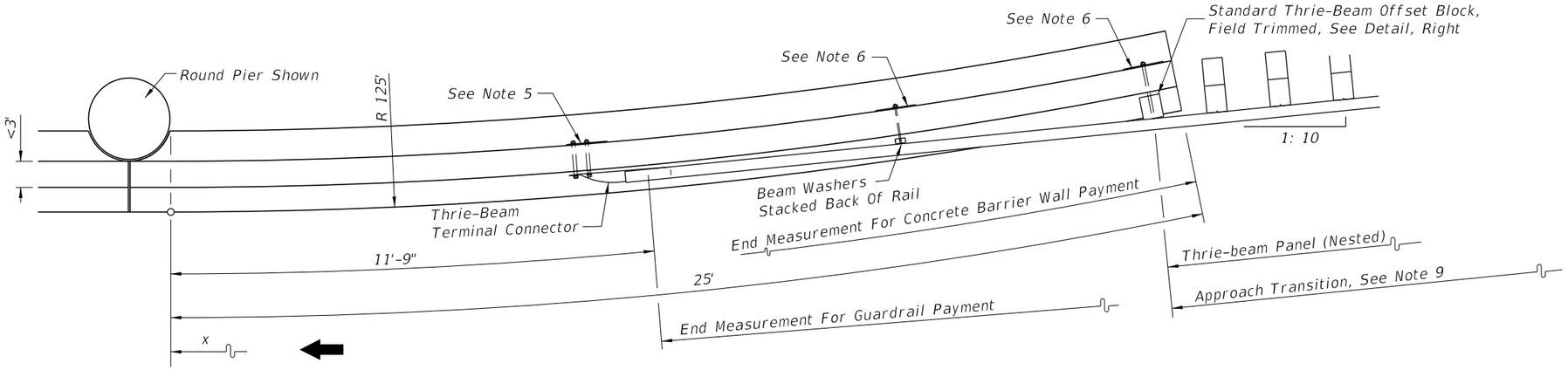

PLAN FOR DESIGN SPEED ≤ 45 MPH

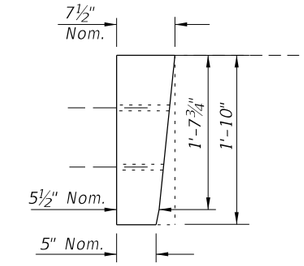

FOR USE WITH EITHER
1: 10 OR 1: 15
GUARDRAIL TRANSITIONS

STANDARD THRIE-BEAM OFFSET BLOCK
(FIELD TRIMMED)

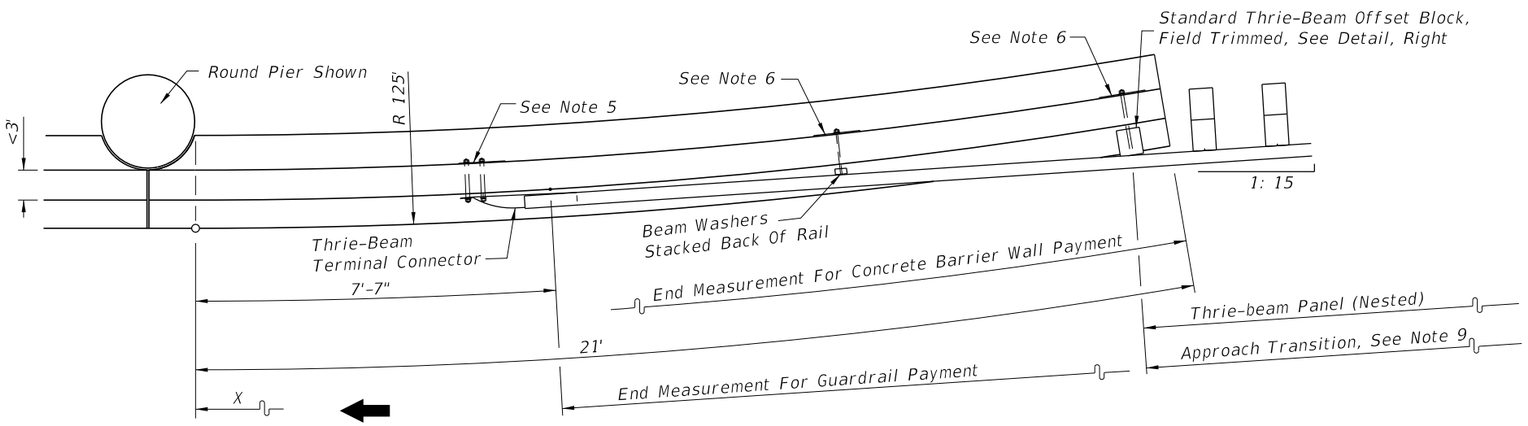

PLAN FOR DESIGN SPEED ≥ 50 MPH

NOTES:

1. The affected segments between bent supports or pier columns shall be constructed in accordance with the detail for REINFORCED CONCRETE SHOULDER WALL, Section QQ, or Section TT. In cases where the barrier wall and slope pavement or other structure would occupy the same location, the wall and structure are to be modified as detailed in the plans.

2. The barrier wall radial segments are intended for use on approach and trailing ends of both one-way and two-way facilities. The guardrail connections shown on this sheet apply to one-way approaches and to the approaching and trailing ends of two-lane two-way facilities. For Details on trailing ends of two-way multilane and one-way facilities, the trailing connection in Index 400 may be used.

   For walls with normal offsets from hazards and their guardrail connections, see GUARDRAIL CONNECTION TO CONCRETE BARRIER WALL APPROACH ENDS.

3. Refer to Index No. 400 for additional guardrail information.

4. Attach thrie-beam terminal connector to shoulder barrier wall with a 21"x12"x⅝" thrie beam terminal connector plate and 5-⅞"x12" long HS hex bolts and nuts with ⅞" plain round washers under heads and nuts.

5. 12"x12"x¼" galvanized steel back-up plate with ⅝" post bolts (either 14" or 18" long) and nuts with ⅝" plain round washers under nuts.

6. For details at Rigid Hazard, see HAZARD PENETRATION INTO STEM OF RIGID CONCRETE BARRIER WALLS.

7. For additional information on PLAN FOR DESIGN SPEED ≤ 45 MPH, see SHOULDER BARRIER WHEN OFFSET FROM ABOVE GROUND HAZARD < 1'-6" AND THE DESIGN SPEED ≤ 45 MPH.

8. For additional information on PLAN FOR DESIGN SPEED ≥ 50 MPH, see SHOULDER BARRIER WALL WHEN OFFSET FROM ABOVE GROUND HAZARD < 1'-6" AND THE DESIGN SPEED ≥ 50 MPH.

9. See APPROACH TRANSITION TO CURVED SHOULDER BARRIER WALL on Sheet 17 for Guardrail Panel and Post Spacing information.

ARC LENGTH (FT)	DISTANCE "X" (FT)	OFFSETS "Y" (FT)
4	4.00	0.06
8	7.99	0.26
12	11.98	0.58
16	15.96	1.02
20	19.91	1.60
21	20.91	1.76
24	23.85	2.30
25	24.83	2.49

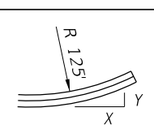

Note:
Wall may be constructed in chords having lengths ≤ 4 feet.

SHOULDER BARRIER WALL AT ABOVE GROUND RIGID HAZARDS WHEN OFFSET FROM HAZARD < 3'

10/24/2016 10:44:29 AM

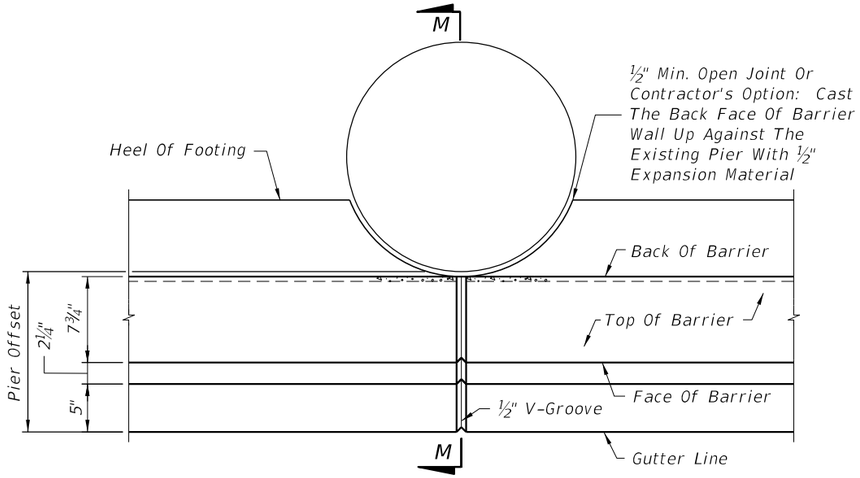

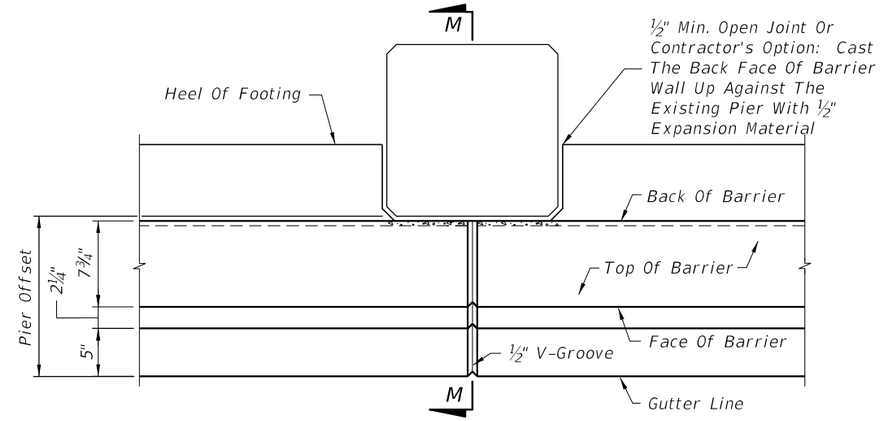

PIER AT BACK OF CONCRETE BARRIER WALL

NOTES:

1. These treatments are not applicable to hazards that cannot provide lateral support to resist the LRFD lateral equivalent static force. See the plans for limits of wall sections and other associated wall treatments.
2. For Low Speed SECTIONS MM, NN and OO, see SHOULDER BARRIER WALL WHEN OFFSET FROM ABOVE GROUND HAZARD < 1'-6" AND THE DESIGN SPEED ≤ 45 MPH.
3. For High Speed SECTIONS MM and NN, see SHOULDER BARRIER WALL WHEN OFFSET FROM ABOVE GROUND HAZARD < 1'-6" AND THE DESIGN SPEED ≥ 50 MPH.
4. The details on this sheet are treatments to the F-shape concrete barrier walls, where site conditions impose reduced clearances between above ground hazards and the walls. Bridge bent supports and piers are shown.
5. When thru drainage is required, a 3"x 12" Drain Slot shall be provided at one of the following locations:
   a. 4' upstream of pier edge for a declining approach.
   b. 4' downstream of pier edge for an inclining approach.

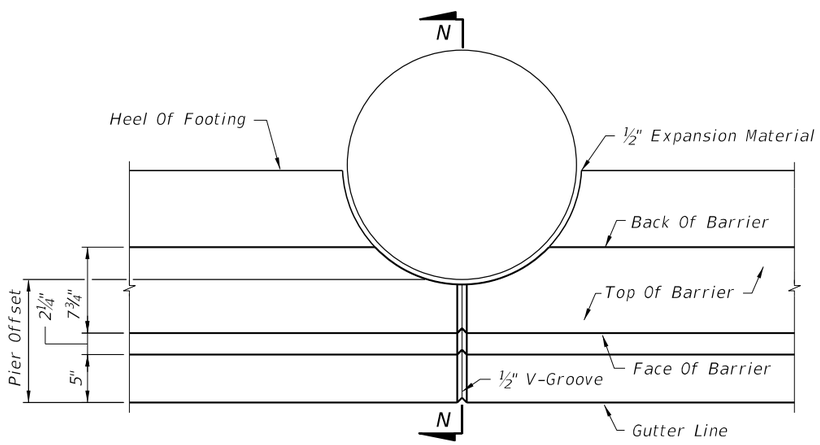

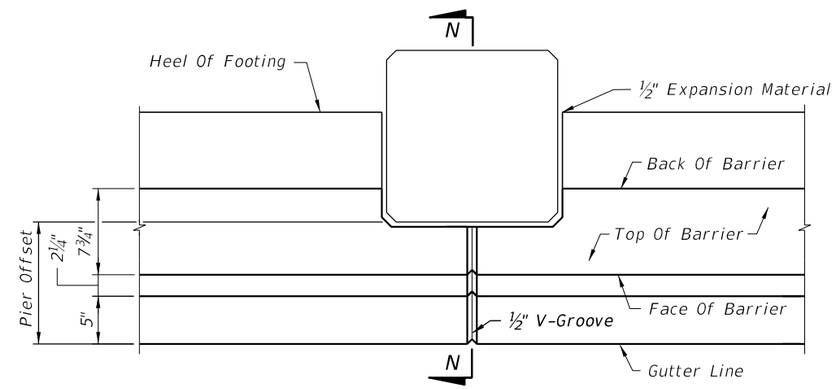

PIER PENETRATION INTO TOP OF CONCRETE BARRIER WALL

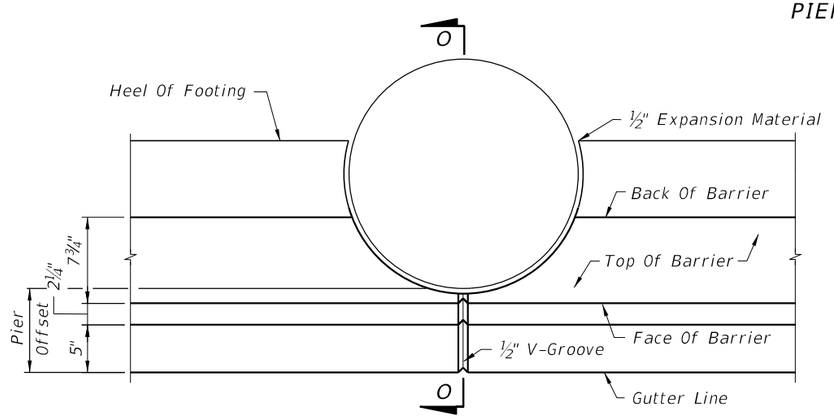

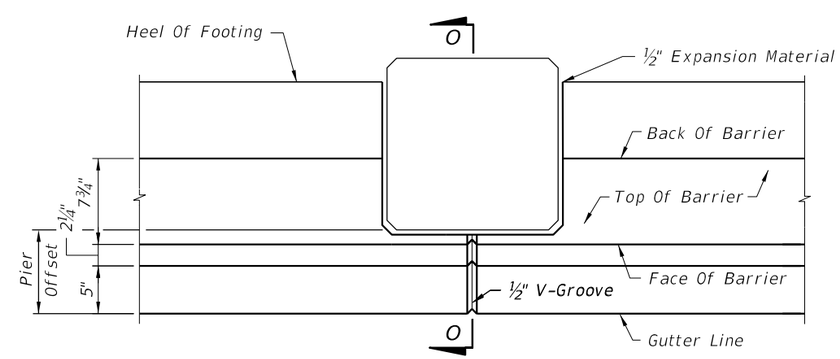

PIER AT FACE OF CONCRETE BARRIER WALL

RIGID HAZARD PENETRATION INTO STEM OF CONCRETE BARRIER WALL

10/24/2016 10:44:32 AM

LAST REVISION	REVISION	DESCRIPTION:			INDEX NO.	SHEET NO.
07/01/14			FY 2017-18 DESIGN STANDARDS	CONCRETE BARRIER WALL	410	19 of 25

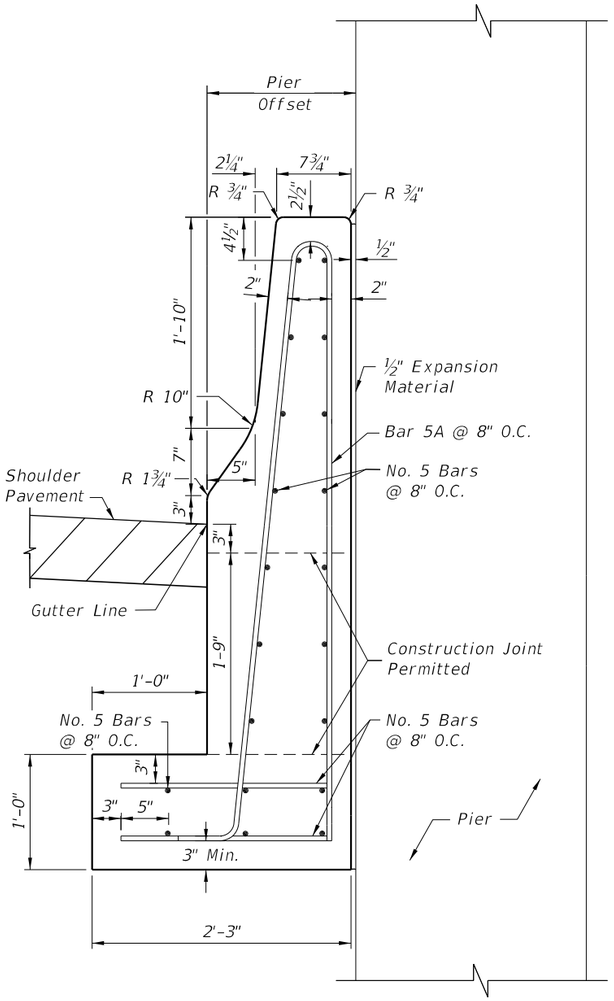

32" SHOULDER WALL
SECTION MM
WHEN PIER OFFSET ≥ 15½"

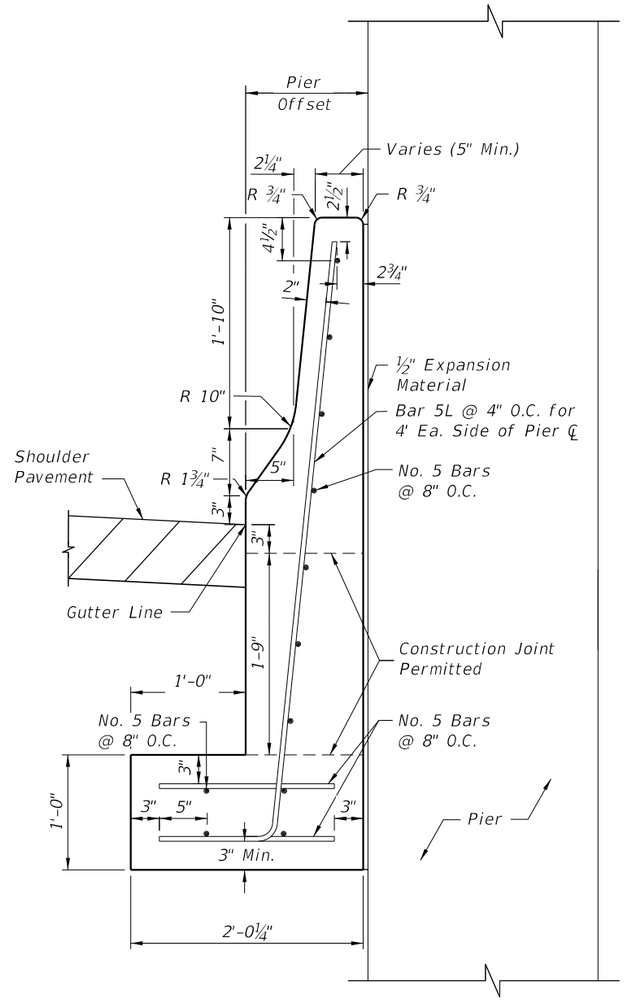

32" SHOULDER WALL
SECTION NN
WHEN 12¾" ≤ PIER OFFSET < 15½"

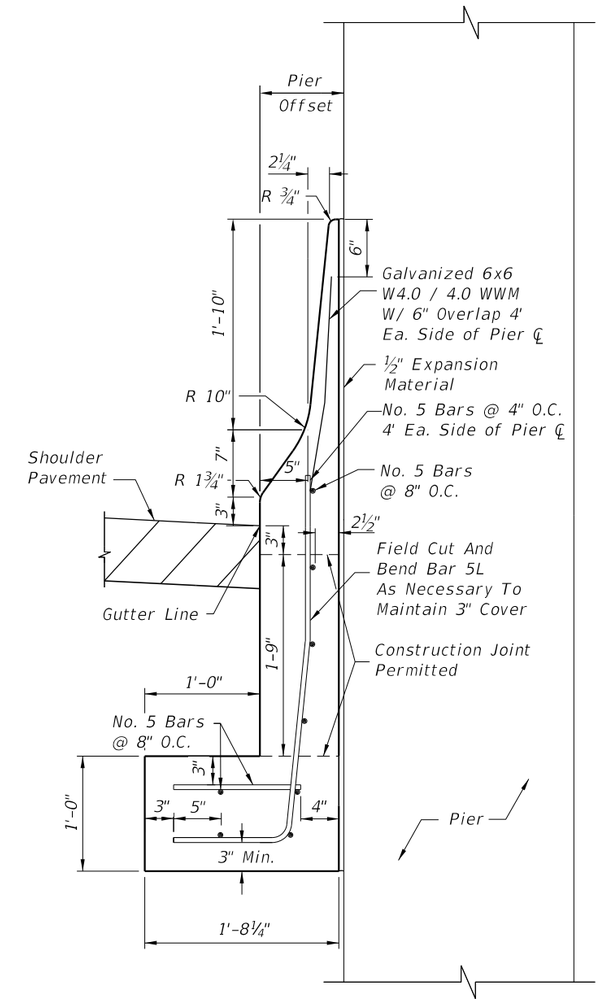

32" OR 42" SHOULDER WALL
SECTION OO
WHEN 8¾" ≤ PIER OFFSET < 12¾"

NOTES:

1. Reduce the vertical steel spacing to 4 inches O.C. a distance of 4 feet for each side of all cold or expansion joints.
2. All longitudinal reinforcement to be continuous or spliced No. 5 bars. Lap splices a minimum of 2'-0".
3. For additional information on Bars 5A and 5L, see BAR BENDING DIAGRAMS.
4. ½" Min. Expansion Joint or at the contractor's option: Back face of barrier wall may be cast against Pier with ½" Expansion Material.

SHOULDER BARRIER WALL WHEN OFFSET FROM ABOVE GROUND HAZARD < 1'-6" AND THE DESIGN SPEED ≤ 45 MPH

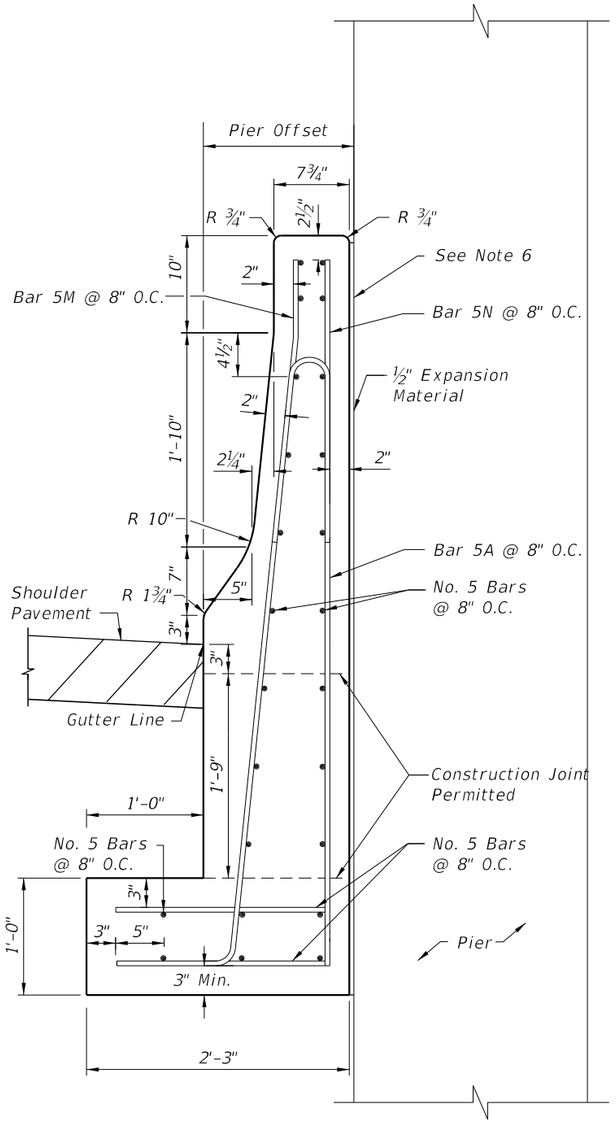

42" SHOULDER WALL
SECTION MM
WHEN PIER OFFSET ≥ 16¾"

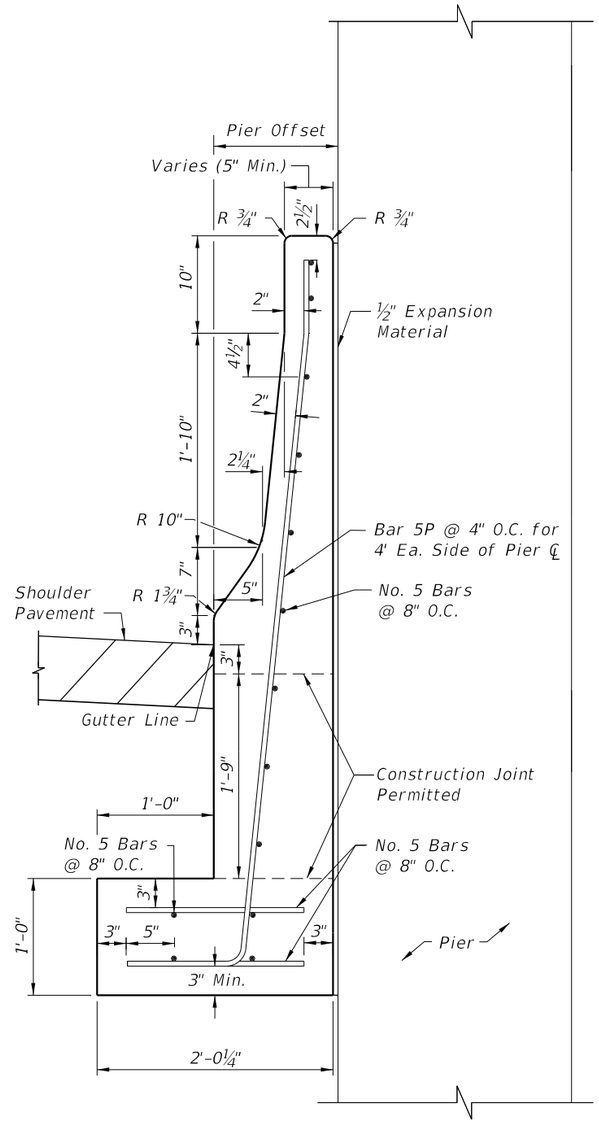

42" SHOULDER WALL
SECTION NN
WHEN 12¾" ≤ PIER OFFSET < 16¾"

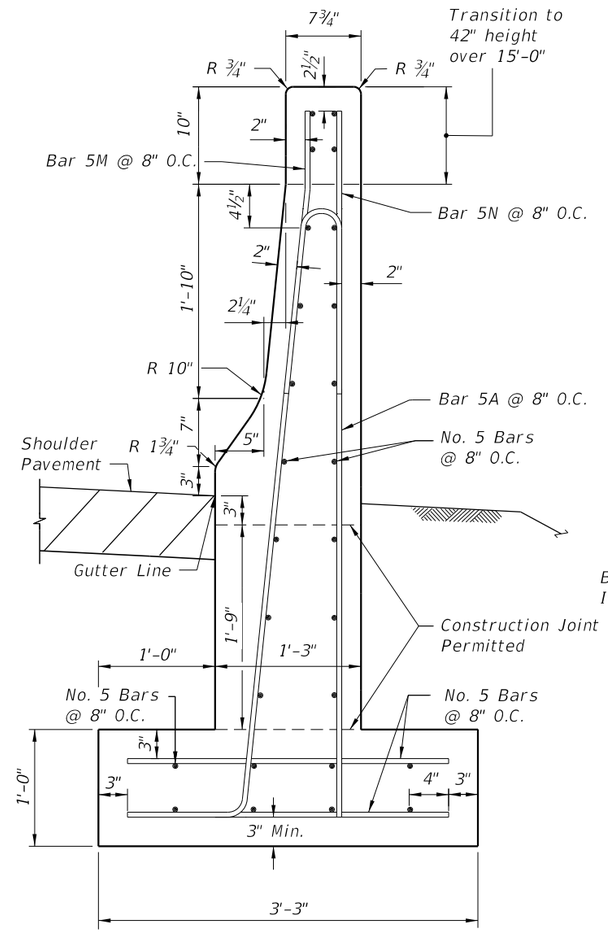

QUANTITIES:
Concrete 0.35 CY/LF
Reinforcing Steel 43 LBS/LF

42" SHOULDER WALL (TYPICAL)

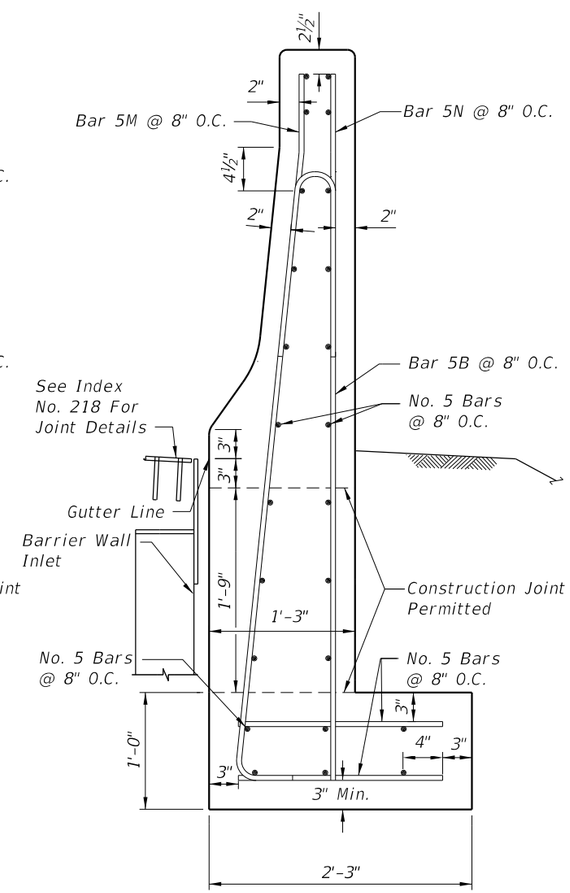

QUANTITIES:
Concrete 0.31 CY/LF
Reinforcing Steel 39 LBS/LF

42" SHOULDER WALL (MODIFIED)

NOTES:

1. Reduce the vertical steel spacing to 4 inches O.C. a distance of 4 feet each side of all cold joints.
2. All longitudinal reinforcement to be continuous or spliced No. 5 bars. Lap splices a minimum of 2'-0".
3. For additional information on Bars 5A, 5B, 5M, 5N and 5P, see BAR BENDING DIAGRAMS.
4. For Section 00, see SHOULDER BARRIER WALL WHEN OFFSET FROM ABOVE GROUND HAZARD < 1'-6" AND THE DESIGN SPEED ≤ 45 MPH.
5. Where the 42" SHOULDER WALL does not abut the pier, use the TYPICAL or MODIFIED sections.
6. ½" Min. Expansion Joint or at the contractor's option: Back face of barrier wall may be cast against Pier with ½" Expansion Material.

SHOULDER BARRIER WALL WHEN OFFSET FROM ABOVE GROUND HAZARD < 1'-6" AND DESIGN SPEED ≥ 50 MPH

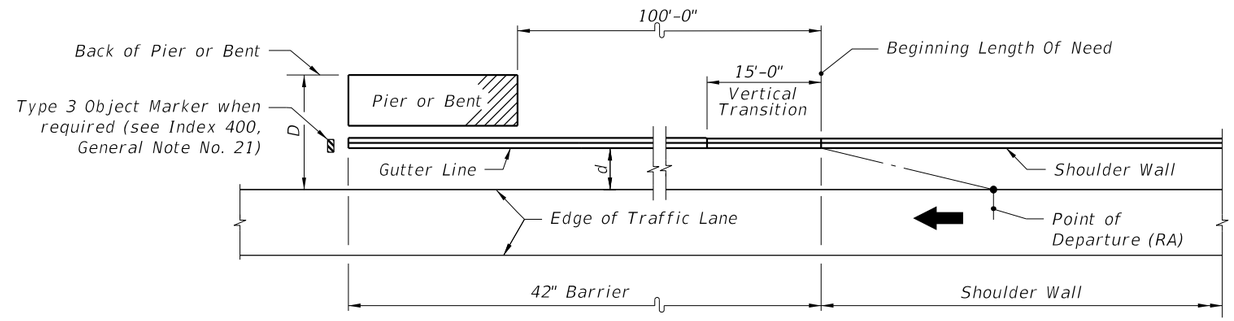

ONE-WAY TRAFFIC
(LEFT SIDE OPPOSITE HAND)

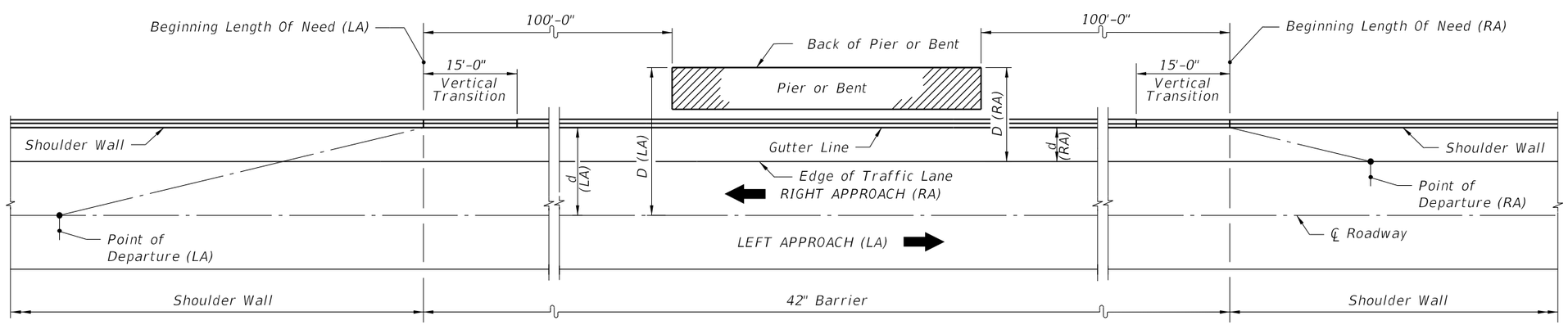

TWO-LANE TWO-WAY TRAFFIC

SHOULDER BARRIER WALL WHEN OFFSET FROM ABOVE GROUND HAZARD < 1'-6" AND DESIGN SPEED ≥ 50 MPH

10/24/2016 10:44:40 AM

LAST REVISION	REVISION	DESCRIPTION:			INDEX NO.	SHEET NO.
07/01/15			FY 2017-18 DESIGN STANDARDS	CONCRETE BARRIER WALL	410	22 of 25

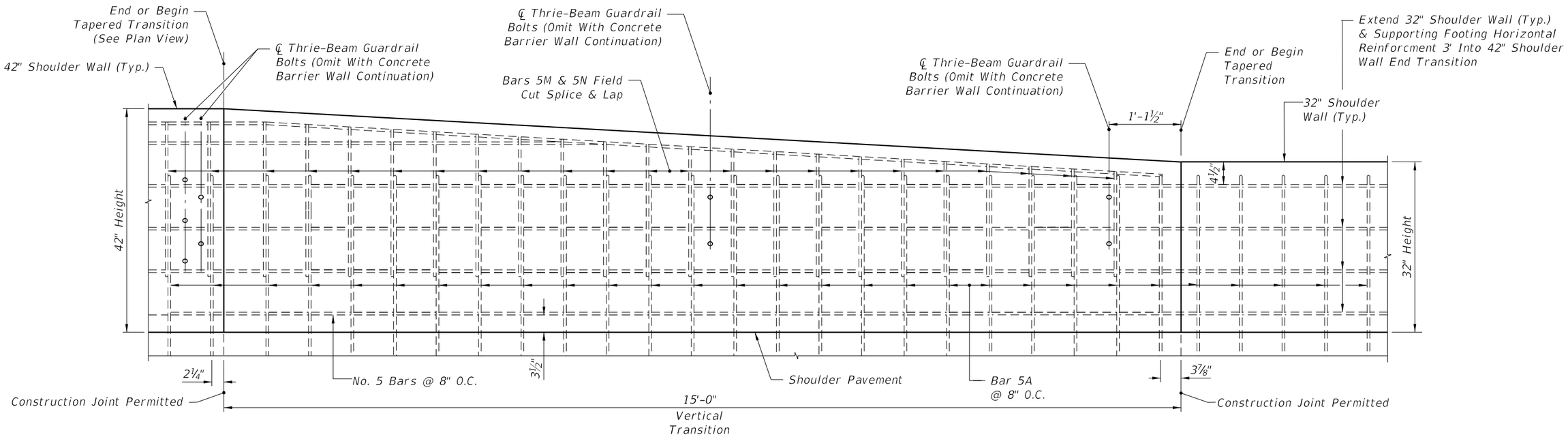

ELEVATION VIEW

42" SHOULDER WALL END TRANSITION

NOTES:

For additional information on Bars 5A, 5M and 5N see BAR BENDING DIAGRAMS.

END TRANSITION DETAILS - 42" SHOULDER WALL WITH GUARDRAIL OR SHOULDER WALL CONTINUATION FOR DESIGN SPEED ≥ 50 MPH

10/24/2016 10:44:43 AM

LAST REVISION	REVISION	DESCRIPTION:	FY 2017-18 DESIGN STANDARDS	CONCRETE BARRIER WALL	INDEX NO.	SHEET NO.
07/01/14					410	23 of 25

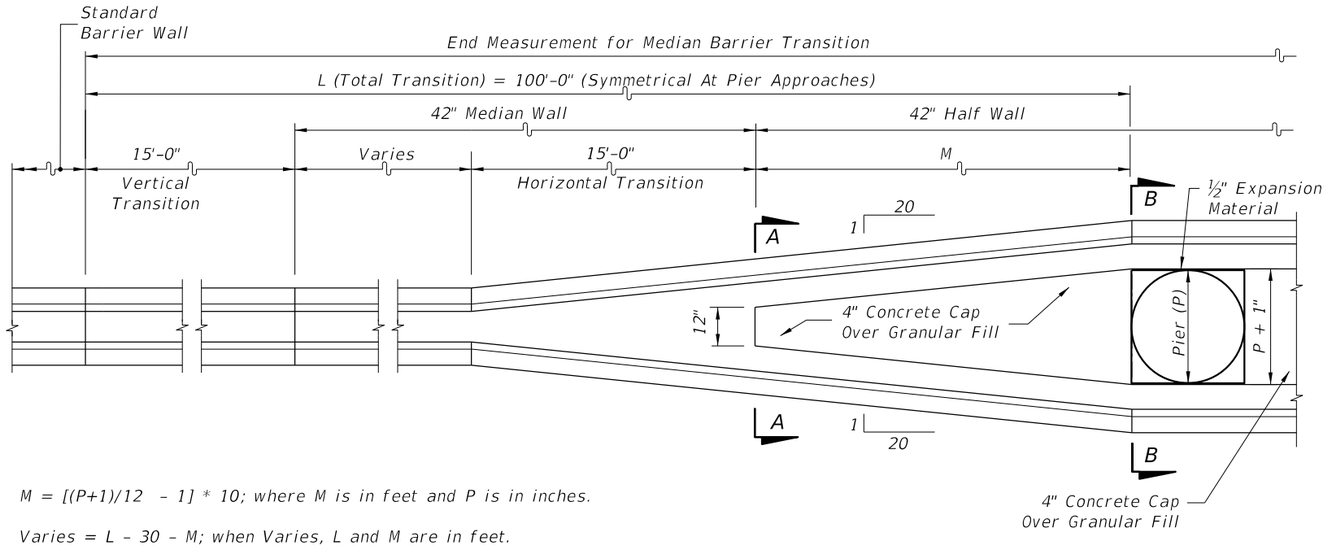

PLAN

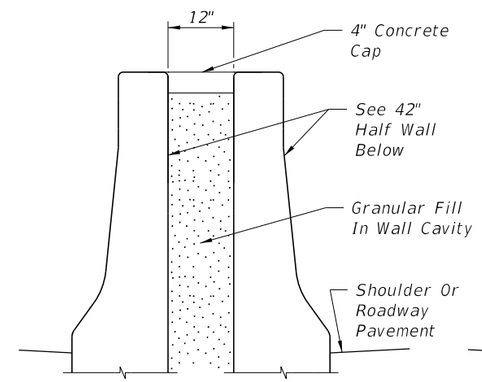

SECTION AA (42" BARRIER)

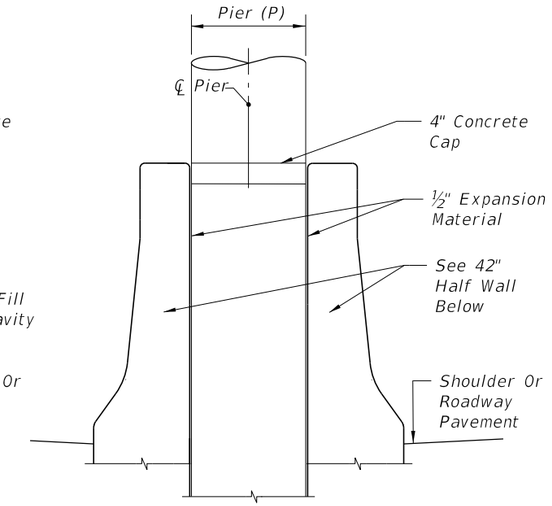

SECTION BB (42" BARRIER)

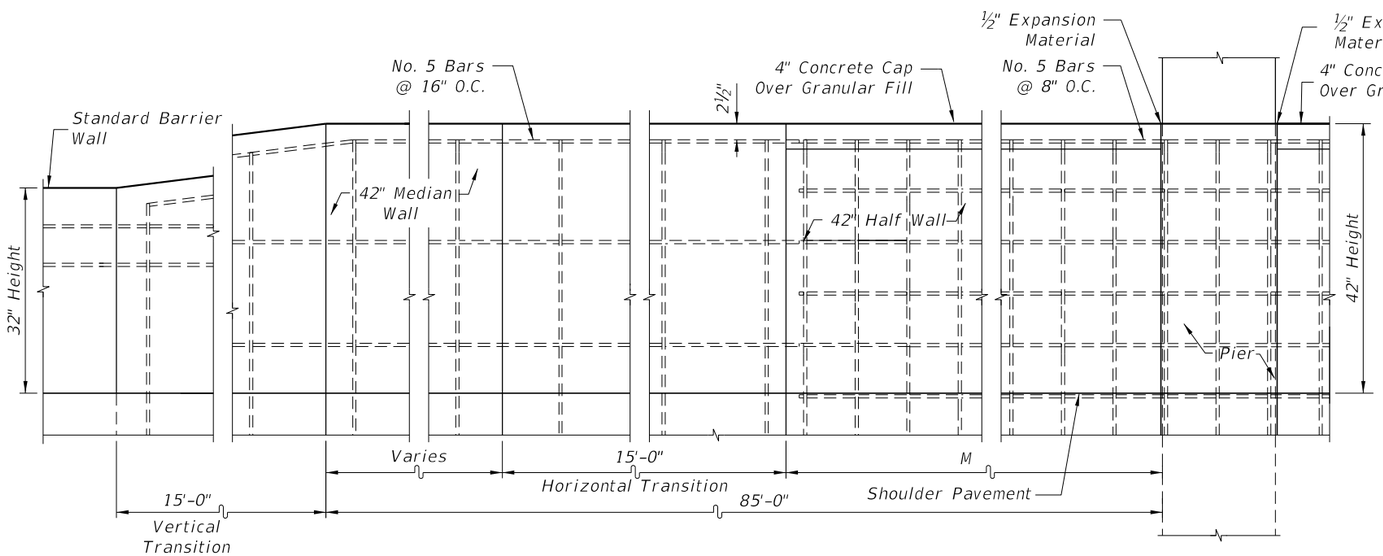

ELEVATION

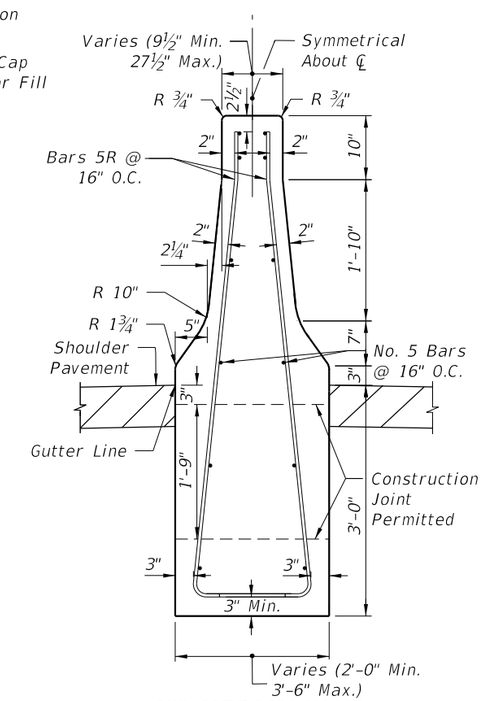

42" MEDIAN WALL

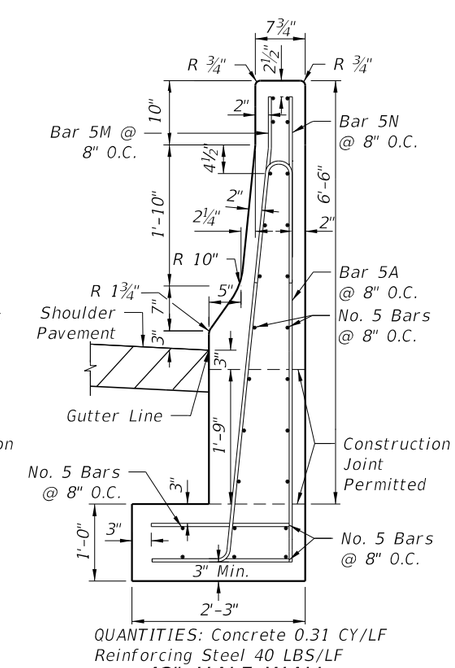

QUANTITIES: Concrete 0.31 CY/LF
Reinforcing Steel 40 LBS/LF

42" HALF WALL

NOTES:

1. Reduce the vertical steel spacing to 4 inches O.C. a distance of 4 feet for each side of all cold or expansion joints.
2. All longitudinal reinforcement to be continuos or spliced No. 5 bars. Lap splices a minimum of 2'-0".
3. Granular Fill To Be Free of Deleterious and Cementitious Material.
4. For additional information on Bars 5A, 5M, 5N and 5R, see BAR BENDING DIAGRAMS.

CONCRETE MEDIAN BARRIER WALL TRANSITIONS AT BRIDGE PIERS FOR DESIGN SPEEDS ≥ 50 MPH

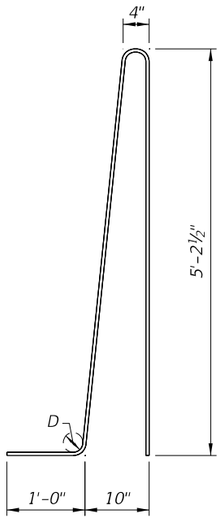

BAR 5A

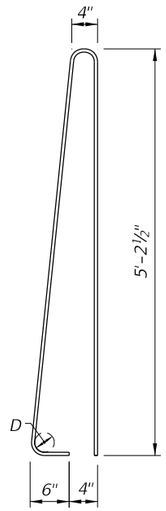

BAR 5B

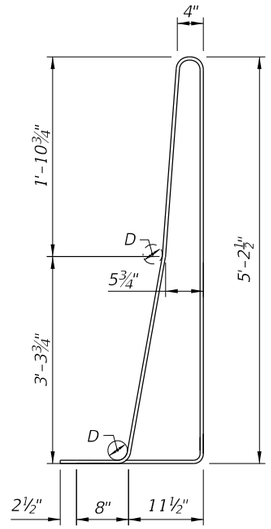

BAR 5C

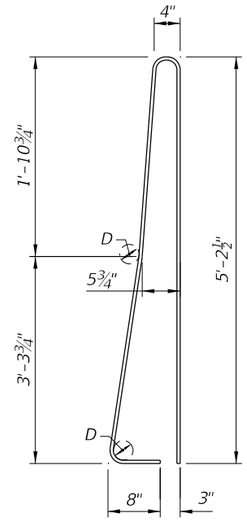

BAR 5D

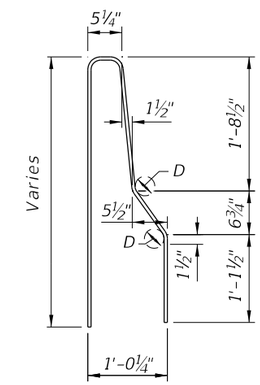

CANTILEVER WALL & L-WALL
BAR 5E

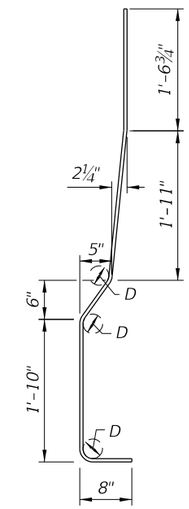

CANTILEVER WALL
BAR 5F

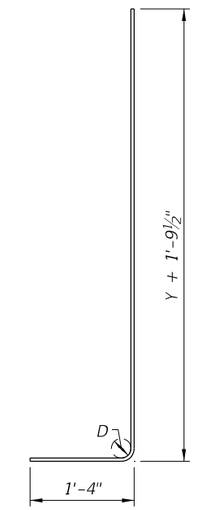

CANTILEVER WALL
BAR 5G

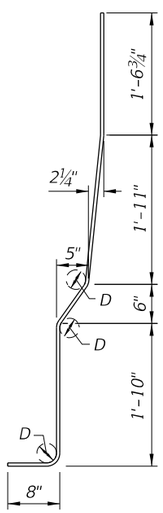

L-WALL
BAR 5H

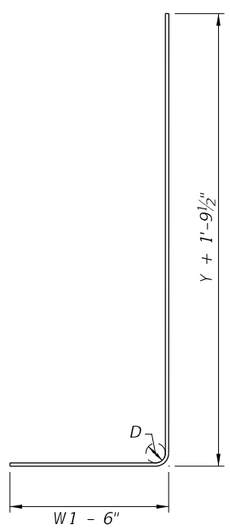

L-WALL
BAR 5J

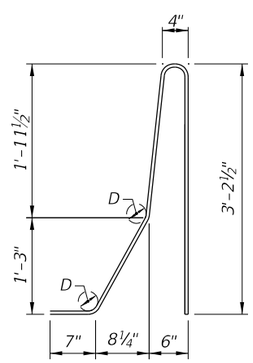

BAR 5K

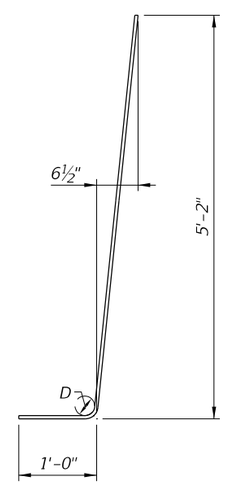

BAR 5L

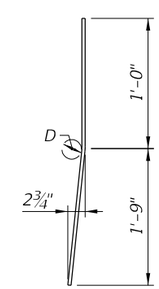

BAR 5M

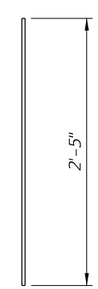

BAR 5N

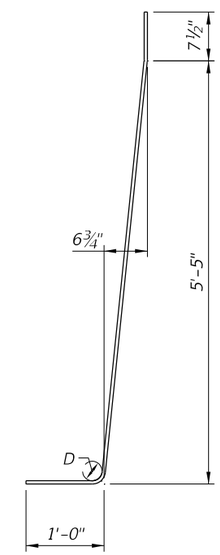

BAR 5P

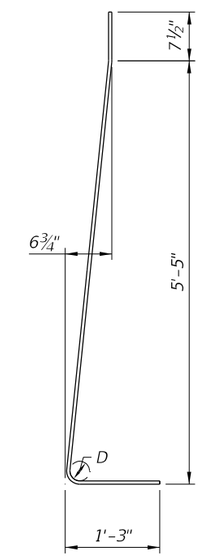

BAR 5R

NOTES:
1. For Additional Information on "STANDARD BAR BENDING DETAILS," See Index 21300.
2. For Bar 5G, Bar 5J, and Dimensions (W, W1 and Y), see CANTILEVER WALL DIMENSIONS TABLE.

BAR BENDING DIAGRAMS