FLORIDA DEPARTMENT OF TRANSPORTATION

INSTRUCTIONS FOR DESIGN STANDARDS

FY 2017-18

FOR USE WITH ALL INCLUDED INDEXES OF THE FDOT DESIGN STANDARDS FY 2017-18

Table of Contents

Table of Contents i
Introduction 1
Index 240 Skimmer for Outlet Control Structures 3
Index 270 Flared End Section 5
Index 289 Concrete Box Culvert Details (LRFD) 6
Index 291 Supplemental Details for Precast Concrete Box Culverts 10
Index 292 Standard Precast Concrete Box Culverts 11
Index 302 Traffic Separators 12
Index 304 Detectable Warnings and Sidewalk Curb Ramps (Rev. 11/16) 13
Index 400 Guardrail (Rev. 11/16) 24
Index 402 Guardrail Transitions and Connections for Existing Bridges (Rev. 11/16) . 38
Index 404 Guardrail Transitions - Existing Post & Beam Bridge Railings (Narrow & Recessed Curbs) 56
Index 405 Guardrail Transitions - Existing Post & Beam Bridge Railings (Wide Curbs) 60
Index 411 Pier Protection Barrier 67
Index 414 Type K Temporary Concrete Barrier System 69
Index 420 Traffic Railing (32" F Shape) 71
Index 421 Traffic Railing (Median 32" F Shape) 73
Index 422 Traffic Railing (42" Vertical Shape) 75
Index 423 Traffic Railing (32" Vertical Shape) 77
Index 424 Traffic Railing (Corral Shape) 79
Index 425 Traffic Railing (42" F Shape) 81
Index 426 Traffic Railing (Median 36" Single-Slope) (Rev. 11/16) 83
Index 427 Traffic Railing (36" Single-Slope) (Rev. 11/16) 85
Index 428 Traffic Railing (42" Single-Slope) (Rev. 11/16) 87
Index 430 Crash Cushion Details 89
Index 470 Series Traffic Railing - (Thrie Beam Retrofit) (Rev. 11/16) 91
Index 477 Thrie-Beam Panel Retrofit (Concrete Handrail) 103
Index 480 Series Traffic Railing - (Vertical Face Retrofit) (Rev. 11/16) 106
Index 519 Rumble Striping 116
Index 521 Concrete Steps 123
Index 810 Bridge Fencing (Vertical) (Rev. 11/16) 124
Index 811 Bridge Fencing (Curved Top) (Rev. 11/16) 126
Index 812 Bridge Fencing (Enclosed) (Rev. 11/16) 128
Index 820 27" Concrete Parapet with Pedestrian/Bicycle Bullet Railing 130
Index 821 Aluminum Pedestrian/Bicycle Bullet Railing for Traffic Railing (32" F Shape) 131

Index 822 Aluminum Pedestrian/Bicycle Bullet Railing Details 132
Index 825 42" Concrete Pedestrian/Bicycle Railing. 133
Index 851 Bridge Pedestrian/Bicycle Railing (Steel) 134
Index 852 Steel Pedestrian/Bicycle Railing (Rev. 11/16) 135
Index 861 Bridge Pedestrian/Bicycle Railing (Aluminum) 139
Index 862 Aluminum Pedestrian/Bicycle Railing (Rev. 11/16) 140
Index 870 Aluminum Pipe Guiderail. 144
Index 880 Steel Pipe Guiderail 145
Index 5200 Precast Noise Walls (Rev. 11/16) 146
Index 5210 Traffic Railing/Noise Wall (8'-0") 158
Index 5211 Traffic Railing/Noise Wall (14'-0") (Rev. 11/16) 162
Index 5212 Traffic Railing/Noise Wall (8'-0") Junction Slab (Rev. 11/16). 164
Index 5213 Traffic Railing/Noise Wall T-Shaped Spread Footing 165
Index 5214 Traffic Railing/Noise Wall L-Shaped Spread Footing 166
Index 5215 Traffic Railing/Noise Wall Trench Footing. 167
Index 5250 Perimeter Wall (Rev. 11/16) 168
Index 6010 C-I-P Cantilever Retaining Wall 172
Index 6011 Gravity Wall (Rev. 11/16) 176
Index 6020 Permanent MSE Retaining Wall Systems. 180
Index 6030 Temporary MSE Retaining Wall Systems. 184
Index 6040 Precast Concrete Sheet Pile Wall. 187
Index 6100 Series Wall Copings and Traffic Railings/Junction Slabs (Rev. 11/16) . . 193
Index 11200 Multi-Column Ground Sign (Rev. 11/16) 195
Index 11300 Overhead Signs (Rev. 11/16) 196
Index 11310 Cantilever Sign Structure (Rev. 11/16) 197
Index 11320 Span Sign Structure (Rev. 11/16) 201
Index 11860 Single Column Ground Signs (Rev. 11/16) 204
Index 11861 Single Column Cantilever Ground Mounted Signs (Rev. 11/16) 205
Index 11870 Single Post Bridge Mounted Sign Support (Rev. 11/16) 206
Index 11871 Single Post Median Barrier Mounted Sign Support (Rev. 11/16) 207
Index 17347 Bicycle Markings 209
Index 17502 High Mast Lighting (Rev. 11/16) 211
Index 17505 External Lighting for Signs (Rev. 11/16) 212
Index 17515 Standard Aluminum Lighting (Rev. 11/16). 213
Index 17723 Steel Strain Pole (Rev. 11/16). 215
Index 17725 Concrete Poles (Rev. 11/16) 216
Index 17743 Standard Mast Arm Assemblies (Rev. 11/16) 219
Index 17745 Mast Arm Assemblies (Rev. 11/16). 235

Index 17900 Traffic Monitoring Site 241
Index 18111 Steel CCTV Pole (Rev. 11/16). 242
Index 18113 Concrete CCTV Pole (Rev. 11/16) 244
Index 20010 Series Prestressed Florida-I Beams (Rev. 11/16). 246
Index 20120 AASHTO Type II Beams (Rev. 11/16). 257
Index 20199 Build-Up and Deflection Data for Prestressed I-Beams 263
Index 20210 Series Florida-U Beams 265
Index 20299 Build-Up and Deflection Data for Florida-U Beams. 275
Index 20502 Beveled Bearing Plate Details Prestressed Florida-U Beams 277
Index 20510 Composite Elastomeric Bearing Pads-Prestressed Florida-I and AASHTO Type II Beams 284
Index 20511 Bearing Plates (Type 1) - Prestressed Florida-I and AASHTO Type II Beams 289
Index 20512 Bearing Plates (Type 2)- Prestressed Florida-I and AASHTO Type II Beams 294
Index 20600 Series Concrete Piles (Rev. 11/16) 297
Index 20654 54" Precast / Post-Tensioned Concrete Cylinder Pile (Rev. 11/16) . . . 306
Index 20660 60" Prestressed Concrete Cylinder Pile (Rev. 11/16) 309
Index 20900 Approach Slabs (Flexible Pavement Approaches) (Rev. 11/16) 312
Index 20910 Approach Slabs (Rigid Pavement Approaches) (Rev. 11/16) 314
Index 21100 Strip Seal Expansion Joint 316
Index 21110 Poured Joint with Backer Rod Expansion Joint System 321
Index 21200 Light Pole Pedestal (Rev. 11/16). 324
Index 21210 Conduit Details (Rev. 11/16) 325
Index 21220 Navigation Light System Details (Fixed Bridges) (Rev. 11/16) 327
Index 21240 Maintenance Lighting For Box Girders 328
Index 21250 Series Access Hatch Assembly 329
Index 21252 Access Door Assembly for Steel Box Sections. 330
Index 21300 Standard Bar Bending Details. 332
Index 21600 Series Temporary Detour Bridge 333
Index 21800 Series Post-Tensioning (Rev. 11/16). 338
Index 21930 Fender Systems - Prestressed Concrete Piles 356
Index 22440 Precast Concrete CFRP/GFRP & HSSS/GFRP Sheet Pile Wall (Rev. 11/16) 359
Index 22600 Series Square CFRP & SS Prestressed Concrete Piles (Rev. 11/16) . 367
Index 22654 54" Prestressed / CFRP & SS Post-Tensioned Concrete Cylinder Pile (Rev. 11/16) 374
Index 22660 60" CFRP & SS Prestressed Concrete Cylinder Pile (Rev. 11/16) 377
IDS - Revision History R-1

Introduction

I.1 General

The ***Instructions for Design Standards*** provides general instructions to assist the Design Engineer of Record when incorporating these ***Design Standards*** in the Contract Plans. Instructions including design criteria, usage limitations, plan content requirements, pay item information and in some cases examples and sample drawings are provided for bridge component, overhead sign structure, box culvert and mast arm standards.

Instructions are organized by ***Design Standard*** index number. Some structural items are addressed in a series of standard drawings, e.g., prestressed beams and traffic railing retrofits. Instructions for all the standards in each respective series are included in the instructions for the lead standard of the series.

It is the responsibility of the Design Engineer of Record using these instructions to determine the fitness for a particular use of each standard in the design of a project. The inappropriate use of and adherence to these instructions does not exempt the engineer from the professional responsibility of developing an appropriate design.

I.2 Use of Design Standards

The ***Design Standards*** comprise the latest and best practices of the FDOT as follows:

1. Structures related Design Standards comply with various design specifications as modified or adopted by FDOT including the ***AASHTO LRFD Bridge Design Specifications***, etc.
2. Compliance with various Federal laws and regulations including U.S. Access Board ADA Standards for Transportation Facilities; Code of Federal Regulations Title 33, Chapter 1, Part 118 Bridge Lighting and Other Signals; etc.
3. Application of FDOT design criteria, policies and preferences
4. Pay Item, Approved Products List and Construction Specification consistency and coordination
5. Detail clarity
6. Proven designs for constructability and long term maintenance
7. Reserve structural capacity and / or redundancy of design
8. Material usage
9. Contractor familiarity
10. Formwork availability for concrete components

In this regard, incorporate the ***Design Standards*** as appropriate on all projects unless a need to develop project specific designs can be documented. Examples of where a project specific design might be required include, but are not limited to:

1. A modified prestressed concrete beam for a bridge widening
2. A single modular expansion joint that can accommodate large movements in lieu of multiple strip seal expansion joints

I.3 Data Tables

Many ***Design Standards*** require Data Tables that must be completed by the designer and then included in the Contract Plans. These Data Tables provide critical information to the contractor that supplements or completes individual ***Design Standards***. These Data Tables are presented as CADD Cells and are included with the FDOT CADD Software on the "FDOT CADD Bar Menu". Typically, the most current Data Tables cannot be included in the FDOT CADD Software until the next version (or Maintenance Release) following the posting of the annual Design Standards to the website (usually in July). If the most current Data Tables are needed prior to release of the concurrent version of the FDOT CADD Software, they are available on the Design Standards website at:

http://www.fdot.gov/roadway/DesignStandards/Standards.shtm

Data Tables within this Volume include a “Table Date” in the upper right corner of each table and may include a “Notes Date” for each set of corresponding notes. Do not change or delete the “Table Date” or “Notes Date” when completing and including the tables and notes in the plans. Use of custom built or recreated versions of the Data Tables (i.e. when the officially issued CADD cell is not used to build a given table) is discouraged. The “Table Date” and “Notes Date” reflects the latest modification of the CADD cell and is intended to be used in a Quality Control process, in conjunction with these instructions and the CADD cells provided with the Structures Bar Menu and/or available at the website listed above, to confirm that the current Data Table is being used. The “Table Date” or “Notes Date” will not necessarily be the same as the “Last Revision” date shown on the associated ***Design Standard*** or ***Design Standard Revision***. The current “Table Date” or “Notes Date” within a given Data Table will be that shown in these instructions.

Index 240 Skimmer for Outlet Control Structures

Design Criteria

Plans Preparation Manual (PPM) Volume 2, Chapter 8; ***Drainage Manual***; ***Structures Design Guidelines (SDG)***

Design Assumptions and Limitations

This skimmer is intended for use on Type C, D, or E Ditch Bottom Inlets that are used as outlet control structures of stormwater management facilities.

To minimize hydraulic losses across the skimmer, the flow area under the skimmer should be three times larger than the flow area of the weir slot. The distance between the pond bottom at the structure and the skimmer shall be not less than 1 foot.

The configuration of skimmers may be subject to regulatory requirements. Coordinate the outlet control structure details with the permitting agencies.

Modified structures must be designed in accordance with the requirements of ***SDG*** 3.17.

Plan Content Requirements

In the Roadway Plans:

Summarize quantity by location in the Summary of Drainage Structures.

Specify, in the plans, the skimmer height (dimension H) and the sides where the weir slots and skimmers are located. The skimmer height must be one of the dimensions shown in the table on Index 240, Sheet 2. Do not use the skimmer on structure sides with outside dimensions greater than 6'-4".

Where this skimmer is used, reference this Index with the outlet control structure details. Where a different skimmer design is needed, provide project specific skimmer details in the plans.

Evaluate if a grate is needed for safety reasons. Where a grate is not needed for safety reasons and is not desirable for hydraulic or other reasons, the grate may be omitted by stating so in the outlet control structure details.

Show the configuration of the weir slots in the outlet control structure detail.

Consideration for Approval of Alternative Technical Proposals

Fiberglass skimmers may be approved with concurrence from the District Drainage Engineer. Approval for use shall be contingent on consideration of factors such as the likelihood of the skimmer's being cracked by impacts from mowers and the material's resistance to degradation from UV sunlight exposure. Fiberglass skimmer designs must be reviewed in accordance with the ***Structures Manual*** Volume 4 - Fiber Reinforced Polymer Guidelines (***FRPG***).

Payment

Item number	Item description	Unit Measure
425-1-5A9	INLETS, DT BOT, (Type), MODIFY	EA

Index 270 Flared End Section

Design Criteria

Drainage Manual; ***Culvert Design Handbook***; ***Structures Design Guidelines (SDG)***

Design Assumptions and Limitations

Flared end sections are intended for use outside the clear zone on median drain and cross drain installation, except that flared end sections for pipe sizes 12" and 15" are permitted within the clear zone. When the slope intersection permits, 12" and 15" flared end sections may be located with the culvert opening as close as 8' beyond the outside edge of the shoulder. Flared end sections are not intended for side drain installations.

Reinforced concrete jackets shall be used at all locations where high velocities and/or highly erosive soils may cause disjointing. These locations are to be shown on the plans.

Toe walls shall be used whenever the anticipated velocity of discharge and soil type are such that erosive action would occur. Toe walls are not required where ditch pavement is provided, except when disjointing would occur if the ditch pavement should fail.

When steel fiber-reinforcing is proposed as an alternative to the conventional reinforcing shown on the Index, evaluate in accordance with ***SDG*** 3.17. A Technical Special Provision identifying the fiber-reinforcing material, dosage rate and quality control provisions is required to be submitted for approval to the District Materials Office, and included in the producer's approved Quality Control Plan.

Plan Content Requirements

In the Roadway Plans:

Summarize quantity by location in the Summary of Drainage Structures, Summary of Sidedrain, or Summary of Miscellaneous Drainage Items in accordance with ***Plans Preparation Manual (PPM)*** Volume 2, Chapter 8.

Plans must clearly show the location of each Flared End Section.

Payment

Item number	Item description	Unit Measure
430-200	Flared End Section (Concrete)	EA

Index 289 Concrete Box Culvert Details (LRFD)

Design Criteria

AASHTO LRFD Bridge Design Specifications, 6th Edition; ***Structures Design Guidelines (SDG)***

Design Assumptions and Limitations

Designs for box culverts shown in this Index are to be produced only by computer analysis, utilizing the Department's ***LRFD*** Box Culvert Program. Designs are to be limited to the live loads and dimensional restraints shown in the General Notes of this Index and to the fill on the barrel(s), as shown in the Contract Plans.

Where depth of fill over the culvert(s) vary, design culvert based on the depth of fill at the center of the inside and outside lanes and ensure design is adequate for the controlling case.

Headwalls with skew angles less than -50° or greater than +50° require special design authorization. In these cases, other design options should be considered. Contact the District Drainage Engineer to obtain authorization.

At the contractor's option, Index 292 Standard Precast Concrete Box Culverts may be substituted for Index 289 cast-in-place box culverts unless specifically prohibited by a plan note. See also the ***Instructions for Design Standards*** Index 292.

Plan Content Requirements

In the Roadway or Structures Plans:

For box culvert extensions with skewed joints at the connection location, consider providing additional reinforcing parallel to the joint for the full width of the culvert to ensure proper load paths for transverse forces. Provide details for these additional reinforcing bars in the plans and manually add these bars to the reinforcing bar list.

Complete the following "Box Culvert Data Tables" and include them in the plans. See Introduction I.3 for more information regarding use of Data Tables.

Work these data tables with the FDOT MathCAD ***LRFD*** Box Culvert Program and Index 289.

Fill in tables using the “Include” Key-In Utility in MicroStation and line1.prn thru line6.prn files located in the program root directory.

Use Structures Site Menu>Text>Table Data, which uses "Chart_TTF" Text Style and True Type Font FDOT Mono.

Complete Notes 1 thru 8.

In Note 6 of the Data Table show Differential Settlement (ΔY) and Effective Length (L) for single curvature deflection where significant long-term settlement is anticipated and

precast box culverts are not specifically excluded. See Index 291 (Sheet 5) for details. If precast box culverts are specifically excluded, delete Note 6.

If a box culvert extension is required, investigate the constraints and condition of the existing structure to determine whether a Type I and/or Type II Connection Detail is appropriate for each Structure/Bridge Number within the project. Contact the District Structures Design Engineer (DSDE) to obtain concurrence with the recommended Connection Detail. Based on concurrence from the DSDE, in Note 7 of the Data Table specify either "Type I ", "Type II", or "Type I or Type II" for each Structure/Bridge Number within the project. If no box culvert extension is required, delete Note 7.

Type II Connections are generally less expensive and faster to construct than Type I Connections, but provide less longitudinal moment resistance. It is recommended that only Type I connections be specified when significant transverse settlement is anticipated under the extension, or when the face of the existing culvert headwall is severely damaged.

For box culverts meeting the definition of a bridge structure (See ***PPM***, Volume 1, Chapter 33) include the Bridge Number in the plans and the Load Rating Sheet per ***SDG*** 3.15.14.

BOX CULVERT DATA TABLES

BOX, HEADWALL AND CUTOFF WALL DATA TABLE (inches unless shown otherwise) — Table Date 7-01-09

LOCATION	STRUCTURE /BRIDGE NUMBER	BOX									HEADWALL AND CUTOFF WALL									
		Wc(ft)	Hc(ft)	Tt	Tw	Tb	Ti	#cells	Lc(ft)	Cover	Blhw	Hlhw	Brhw	Hrhw	Blcw	Hlcw	Brcw	Hrcw	SL(deg)	SR(deg)

LEFT SIDE WINGWALLS DATA TABLE (inches unless shown otherwise) — Table Date 01-01-11

STRUCTURE /BRIDGE NUMBER	LEFT END WINGWALL									LEFT BEGIN WINGWALL								
	Rt	Rw	Rh	Rd	SW(deg)	β (deg)	He(ft)	Hs(ft)	Lw(ft)	Rt	Rw	Rh	Rd	SW(deg)	β (deg)	He(ft)	Hs(ft)	Lw(ft)

RIGHT SIDE WINGWALLS DATA TABLE (inches unless shown otherwise) — Table Date 01-01-11

STRUCTURE /BRIDGE NUMBER	RIGHT END WINGWALL									RIGHT BEGIN WINGWALL								
	Rt	Rw	Rh	Rd	SW(deg)	β (deg)	He(ft)	Hs(ft)	Lw(ft)	Rt	Rw	Rh	Rd	SW(deg)	β (deg)	He(ft)	Hs(ft)	Lw(ft)

ESTIMATED CONCRETE QUANTITIES (CY) — Table Date 7-01-13

STRUCTURE /BRIDGE NUMBER	BOX								LEFT END WINGWALL			LEFT BEGIN WINGWALL			RIGHT END WINGWALL			RIGHT BEGIN WINGWALL		
	Left Cutoff Wall	Right Cutoff Wall	Bottom Slab	Walls	Top Slab	Left Head Wall	Right Head Wall	Sub Total	Footing	Wall	Sub Total	Footing	Wall	Sub Total	Footing	Wall	Sub Total	Footing	Wall	Sub Total

MAIN STEEL REINFORCEMENT SPACING (inches) — Table Date 7-01-09

STRUCTURE /BRIDGE NUMBER	BOX															HEADWALLS		CUTOFF WALLS	
	101	102	103	104	105	106	107	108	109	110	111	112	113	114	115, 116...	803	806	809	812

NOTES [Notes Date 7-01-14]:

1. Environmental Class -----
2. Reinforcing Steel, Grade -----
3. Concrete Class ----- f'c = ----- ksi
4. Soil Properties:
   Friction Angle -----
   Modulus of Subgrade Reaction -----
   Nominal Bearing Resistance -----
5. Work this Drawing with Design Standards Index No. 289 and Sheet Nos. -----
6. Settlement criteria for Precast Box Culvert option (Index No. 291):
   Long Term Differential Settlement (ΔY) = ------ ft.
   Effective Length for Settlement (L) = ------ ft.
7. Connection Types permitted for Box Culvert Extensions:
   Structure/ Bridge Number XXXXX - _____
   (Type I/Type II/Type I or Type II)
8. Quantities for Type I and Type II Connections include 2 ft. additional payment length beyond Lc for connection to existing box culvert. (See Summary of Box Culvert Quantities box in Plans)

WINGWALL STEEL REINFORCEMENT SPACING (inches) — Table Date 7-01-09

STRUCTURE /BRIDGE NUMBER	LEFT END WINGWALL							LEFT BEGIN WINGWALL							RIGHT END WINGWALL							RIGHT BEGIN WINGWALL						
	401 407(8)	402 (403)	404 (405)	406	409	410	411	501 507(8)	502 (503)	504 (505)	506	509	510	511	601 607(8)	602 (603)	604 (605)	606	609	610	611	701 707(8)	702 (703)	704 (705)	706	709	710	711

WINGWALL NOTE: Bar designations in "( )" are only required for variable height wingwalls.

Payment

Item number	Item description	Unit Measure
400-2-1	Concrete Class II, Culverts	CY
400-4-1	Concrete Class IV, Culverts	CY
415-1-1	Reinforcing Steel - Roadway	LB

Index 291 Supplemental Details for Precast Concrete Box Culverts

Design Criteria

AASHTO LRFD Bridge Design Specifications, 6th Edition; ***Structures Design Guidelines (SDG)***

Design Assumptions and Limitations

Work this Index with the Cast-In-Place Concrete Box Culvert Details and Data Tables shown in the plans, Indexes 289 and 292, and the Precast Concrete Box Culverts shown in the shop drawings.

Plan Content Requirements

Show Differential Settlement (ΔY) and Effective Length (L) for single curvature deflection in the Contract Plans where significant long-term settlement is anticipated. See Index 291(Sheet 5 of 5) for details.

Payment

Item number	Item description	Unit Measure
400-2-1	Concrete Class II, Culverts	CY
400-4-1	Concrete Class IV, Culverts	CY
415-1-1	Reinforcing Steel - Roadway	LB

Index 292 Standard Precast Concrete Box Culverts

Design Criteria

AASHTO LRFD Bridge Design Specifications, 4th Edition; ***Structures Design Guidelines (SDG)***

Design Assumptions and Limitations

Since these standards were designed based on the 4th Edition of the ***AASHTO LRFD Bridge Design Specifications***, the calculations yield a slightly more conservative design than the 6th Edition for some depth ranges due to the elimination of the Fatigue Limit State check.

At the contractor's option, these precast designs may be substituted for cast-in-place box culverts designed to ***AASHTO LRFD Bridge Design Specifications***, 6th Edition. Designs are based on the design criteria shown in the ***SDG***.

Use this standard with Index 291.

This index may be used in lieu of Index 289 when a precast box culvert is determined to be more cost effective or more appropriate for the project. In such cases, the designer shall show the box culvert Span, Rise and Design Earth Cover in the plans. The designer shall also provide the headwall and wing wall design in the plans by completing the relevant data tables and notes for Index 289 (Box Culvert Data Tables).

Plan Content Requirements

Include references to and completed data tables for Index 289 Concrete Box Culvert Details in the plans. Use of Index 292 in lieu of Index 289 is at the contractor's option unless specifically excluded by plan note.

Payment

Item number	Item description	Unit Measure
400-2-1	Concrete Class II, Culverts	CY
400-4-1	Concrete Class IV, Culverts	CY
415-1-1	Reinforcing Steel - Roadway	LB

Index 302 Traffic Separators

Design Criteria

AASHTO A Policy on Geometric Design of Highways and Streets, Fourth Edition, 2001 (AASHTO Green Book)

Design Assumptions and Limitations

Bridge mounted Traffic Separators are intended to match up geometrically with adjacent roadway Traffic Separators. They are essentially the same as roadway Traffic Separators but with the addition of reinforcing steel to limit cracking caused by shrinkage and deflection of the bridge deck due to live load.

Plan Content Requirements

In the Structures Plans:

In the Materials Note on the General Notes sheet, specify the use of Class NS concrete meeting the requirements of ***Specifications*** Section 347.

Show and label the Traffic Separator on the Plan and Elevation, Typical Section and Superstructure sheets, and other sheets as required. Specify the same shape Traffic Separator (Type "E" or "F") as is used on the roadway approach. Include cross references to ***Design Standards*** Index 302.

Estimated concrete quantities and reinforcing steel lists are not required.

Payment

Item number	Item description	Unit Measure
520-5-AB	Concrete Traffic Separator	LF
520-70	Concrete Traffic Separator, Special- Variable Width	SY

Index 304 Detectable Warnings and Sidewalk Curb Ramps (Rev. 11/16)

Design Criteria

Plans Preparation Manual (PPM) Volume 1, Chapter 8, Accessibility Considerations, Latest Edition; ***Americans with Disabilities Act Standards for Transportation Facilities***, ADA 2006; ***Public Rights-of-Way Accessibility Guidelines***, PROWAG 2011; and the ***Florida Intersection Design Guide***, FIDG Latest Edition.

Design Assumptions and Limitations

Refer to the ***PPM*** Volume 1, Chapter 8 for limitations relative to sidewalk accessibility conditions.

Sidewalk Curb Ramps are designed based on accessibility guidelines from the ***Americans with Disabilities Act Standards for Transportation Facilities*** 2006.

Sidewalk Curb Ramp preferences for ***Design Standard***, Index 304 are taken from the ***Public Rights-of-Way Accessibility Guidelines*** (PROWAG) 2011.

Alpha-identifications have been provided in the Index for the various curb ramp options (e.g. CR-A, CR-B, etc.) to facilitate ease of callouts in the Plans.

- Curb Ramps CR-A, CR-B & CR-C are for use where ramp and landing depths are not restricted.
- Curb Ramps CR-D, CR-E, CR-F, CR-G and CR-H are for linear pedestrian traffic.
- Curb Ramps CR-K and CR-L are for use where ramp and landing depths are restricted.

Limitations on Sidewalk Curb Ramp designs: When proposed sidewalk curb ramps cannot be designed within existing accessibility guidelines, then a project specific design is required to be in accordance with ADA requirements. When compliance with ADA curb ramp requirements is determined to be technically infeasible (i.e. no engineering solution is available), documentation as a Design Variation is required. This may occur where existing right of way is inadequate and where conflicts may occur with existing features which cannot be feasibly relocated or adjusted (drainage inlets, signal poles, pull and junction boxes, etc.).

Geometric designs (typical radii for 90 degree curb returns) for the table of detectable warnings of turning roadways is taken from the ***Florida Intersection Design Guide***.

Limitations on detectable warning surfaces: The Surface Area of Detectable Warnings is provided as Table 1. These typical areas are provided for the 10 standard curb ramp types (see all alpha-identifications) and 2 flush shoulder options. Quantities for the total area were generated based on typical radii for 90 degree curb returns. The total area of detectable warning quantities are intended to aid the designer in quantifying detectable warning surfaces for typical sidewalk curb ramp applications. For detectable warnings total area calculations see Design Aids below.

Plan Content Requirements

Summary Boxes:

See ***Basis of Estimates (BOE)*** Chapter 8 for Summary of Sidewalk and Detectable Warnings requirements.

Roadway Plan Views:

1. Location (Station)
2. Side (either Left, Right or Median)
3. Sidewalk Curb Ramp alpha-identification

Payment

Refer to the Basis of Estimates and Standard Specifications for Road and Bridge Construction for additional information on payment, pay item use and compensation.

Item number	Item description	Unit Measure
520-1-	Concrete Curb and Gutter	LF
522-1-	Concrete Sidewalk and Driveways	SY
527-2-	Detectable Warnings	SF

Detectable Warnings and Sidewalk Curb Ramps are paid as follows:

Curb transitions and reconstructed curbs are paid under the contract unit price of Concrete Curb and Gutter, LF.

Sidewalk curb ramps, reconstructed sidewalks, walk around sidewalks, sidewalk landings, and sidewalk curb are paid under the contract unit price for Concrete Sidewalk and Driveways, SY.

The cost of furnishing and installing detectable warnings for new construction or retrofit and all incidental items are included in the pay item for Detectable Warnings, SF.

Table 1 Surface Area of Detectable Warnings

Curb Ramp Type	Curb Radius (ft)	Total Area (sf)
CR-A	N/A	8
CR-B	N/A	8
CR-C	N/A	8
CR-D	25	11
CR-E	N/A	8
CR-F	10	9
	20	11
	25	13
	30	14
CR-G	10	10
	20	11
	25	12
	30	14
CR-H	20	8
	25	8
	30	8
CR-K	N/A	8
CR-L	10	18
	15	13
Flush Shoulder Option A	10	11
	20	14
	25	15
	30	17
	40	19
	50	21
Flush Shoulder Option B	10	10
	20	10
	25	10

Design Aids

Detectable Warnings Total Area Calculations:

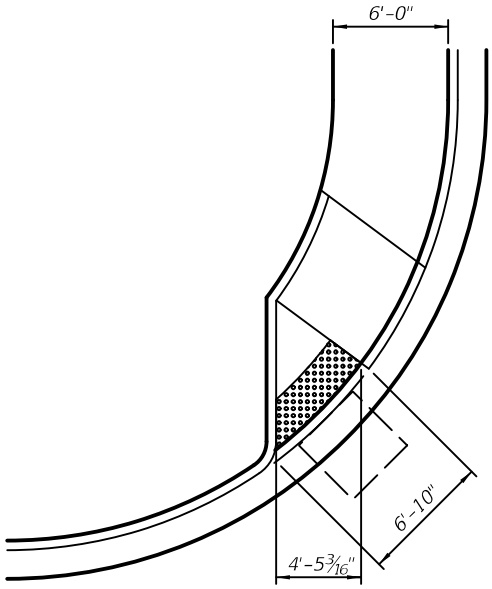

11sf
25' Radius

CR-D

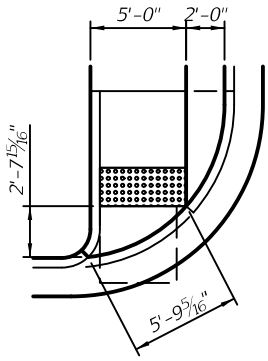

9sf
10' Radius

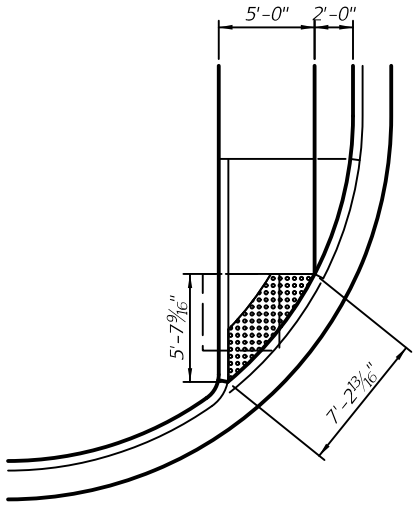

11sf
20' Radius

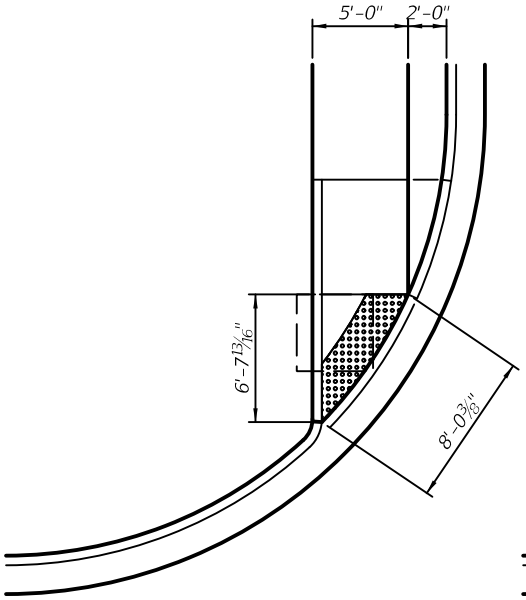

13sf
25' Radius

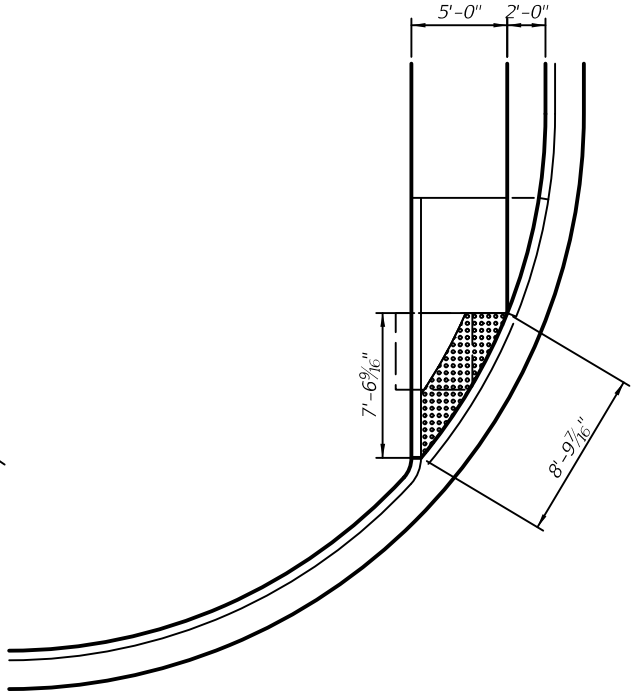

14sf
30' Radius

CR-F

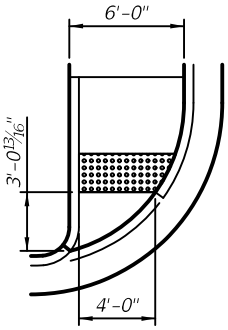

10sf
10' Radius

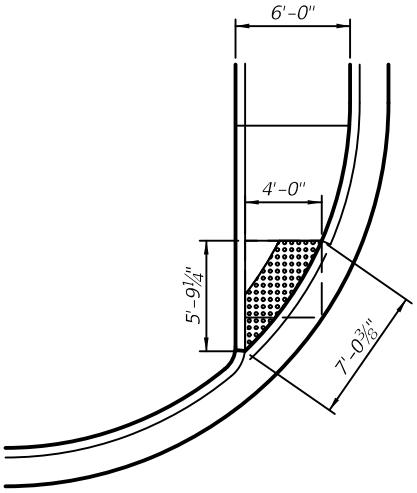

11sf
20' Radius

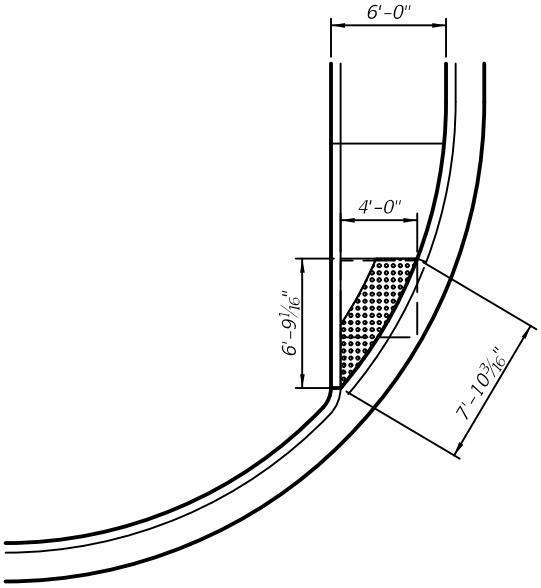

12sf
25' Radius

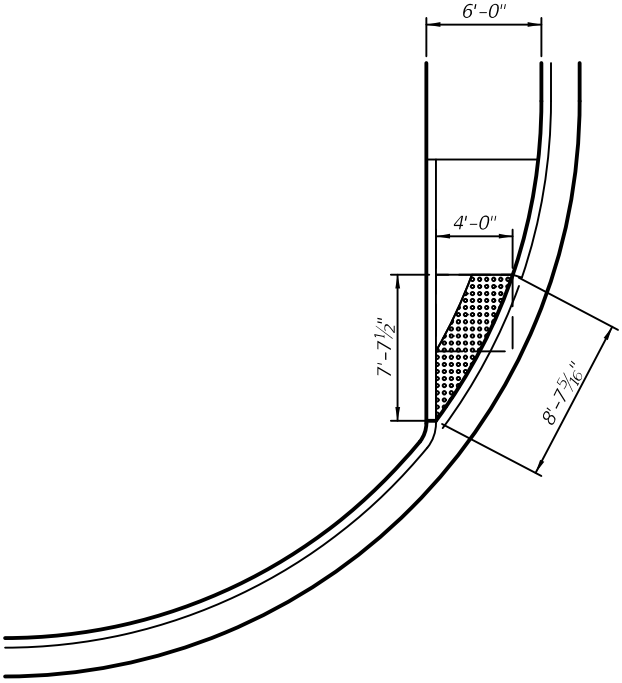

14sf
30' Radius

CR-G

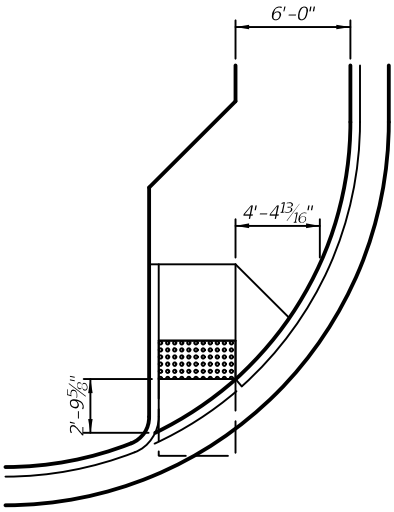

8sf
20' Radius

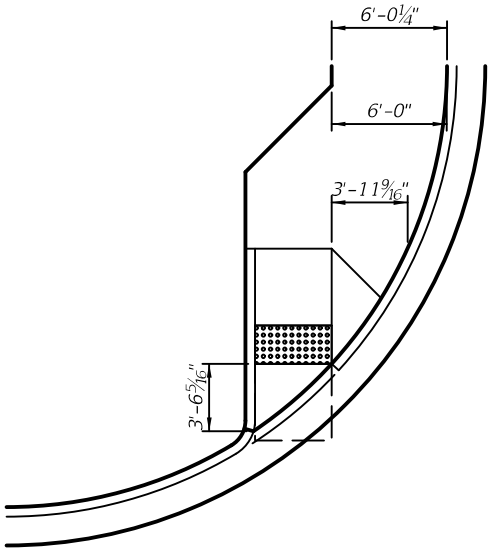

8sf
25' Radius

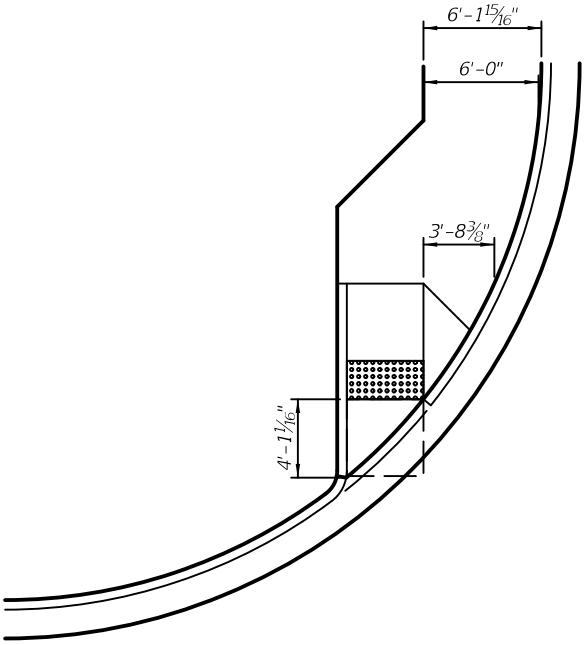

8sf
30' Radius

CR-H

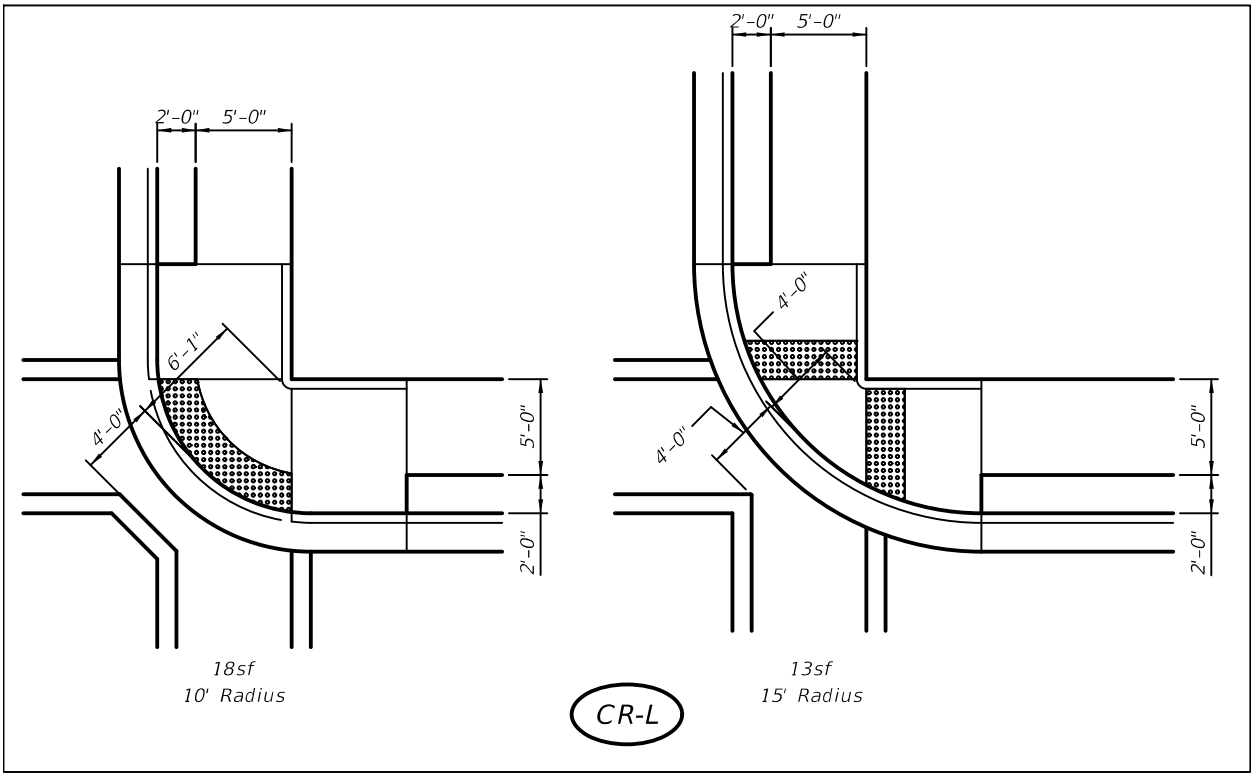
2'-0"
5'-0"
6'-1"
4'-0"
5'-0"
2'-0"
18sf
10' Radius
2'-0"
5'-0"
4'-0"
4'-0"
5'-0"
2'-0"
13sf
15' Radius
CR-L

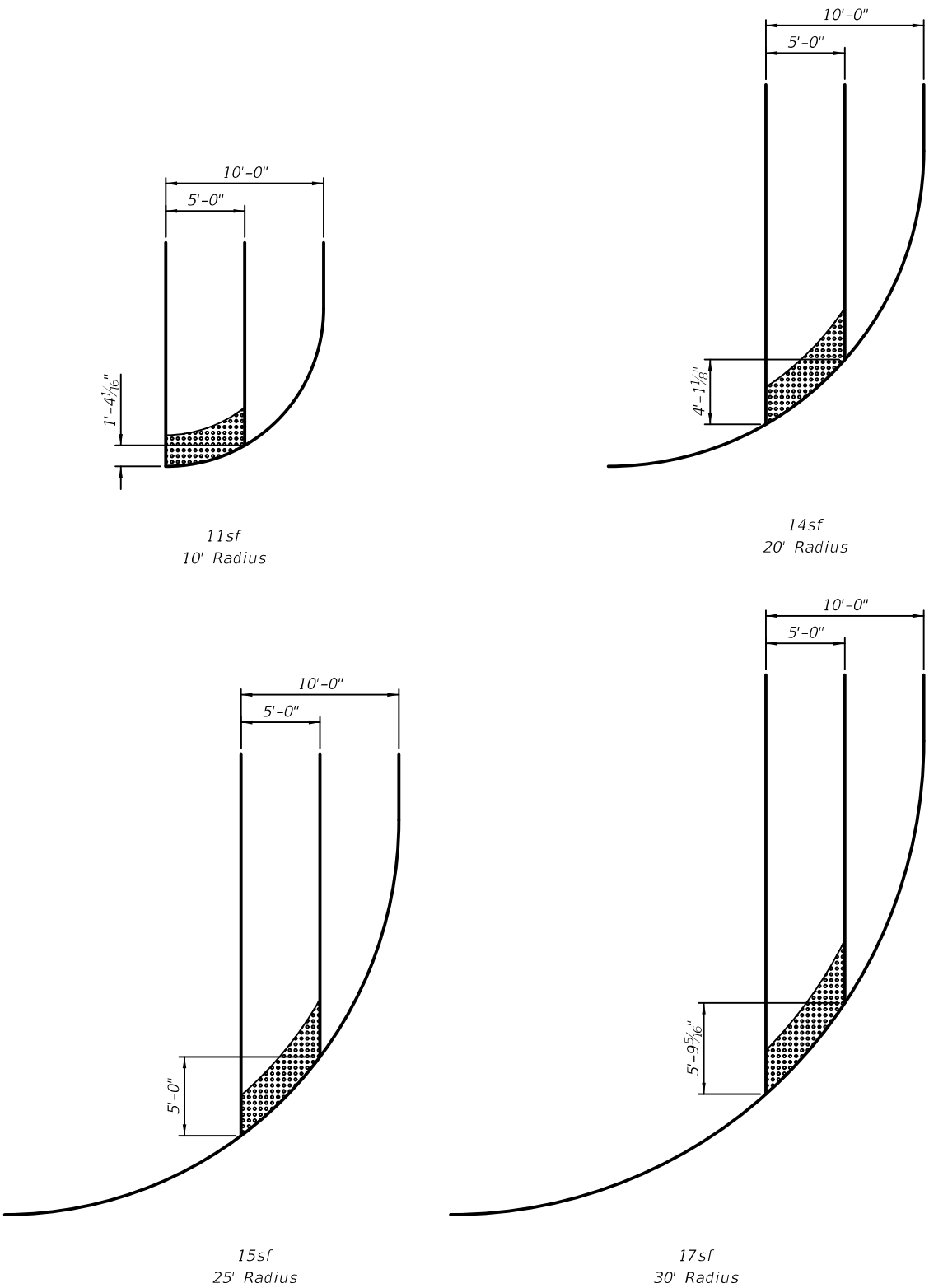

Flush Shoulder
Option A

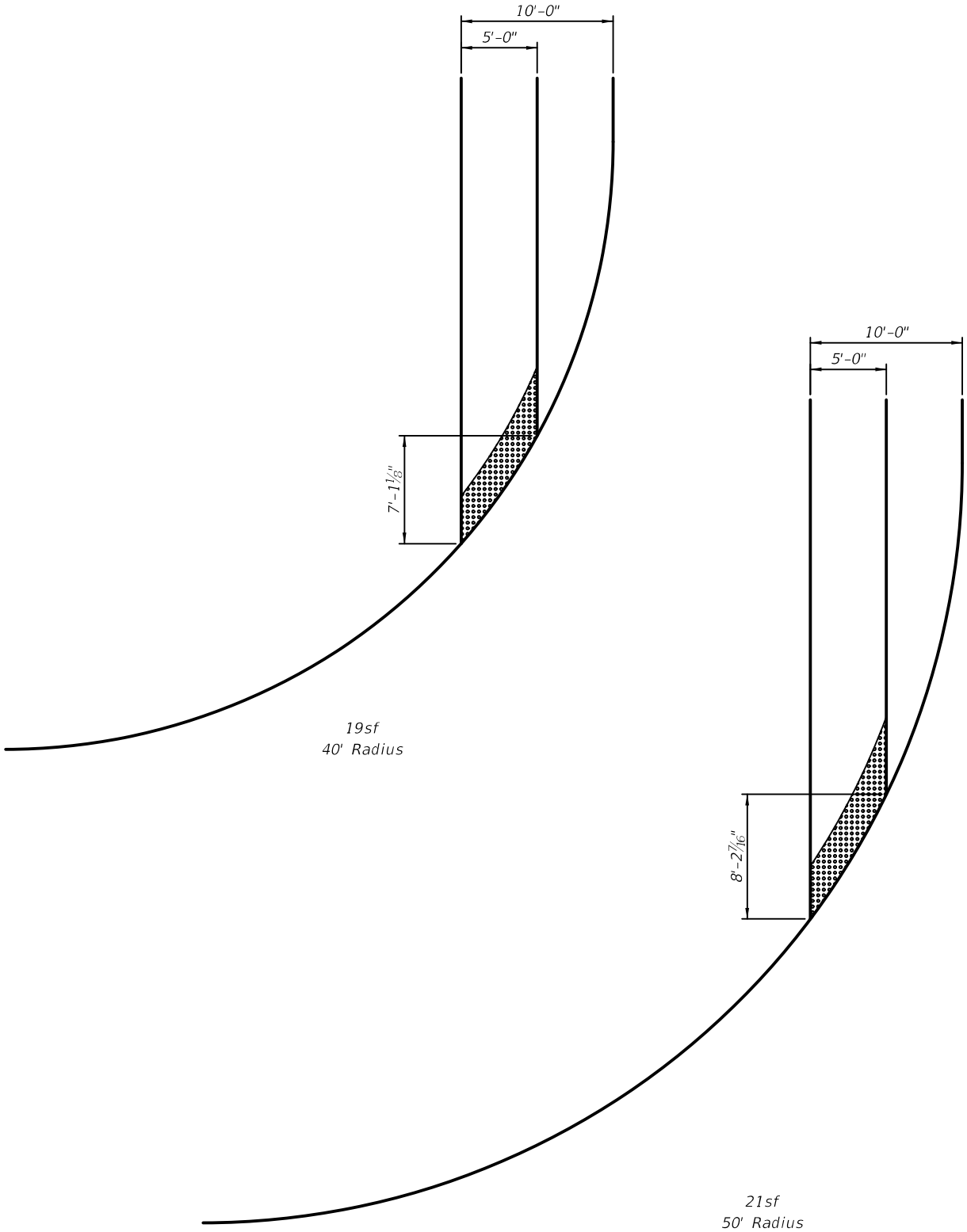

Flush Shoulder
Option A (Cont.)

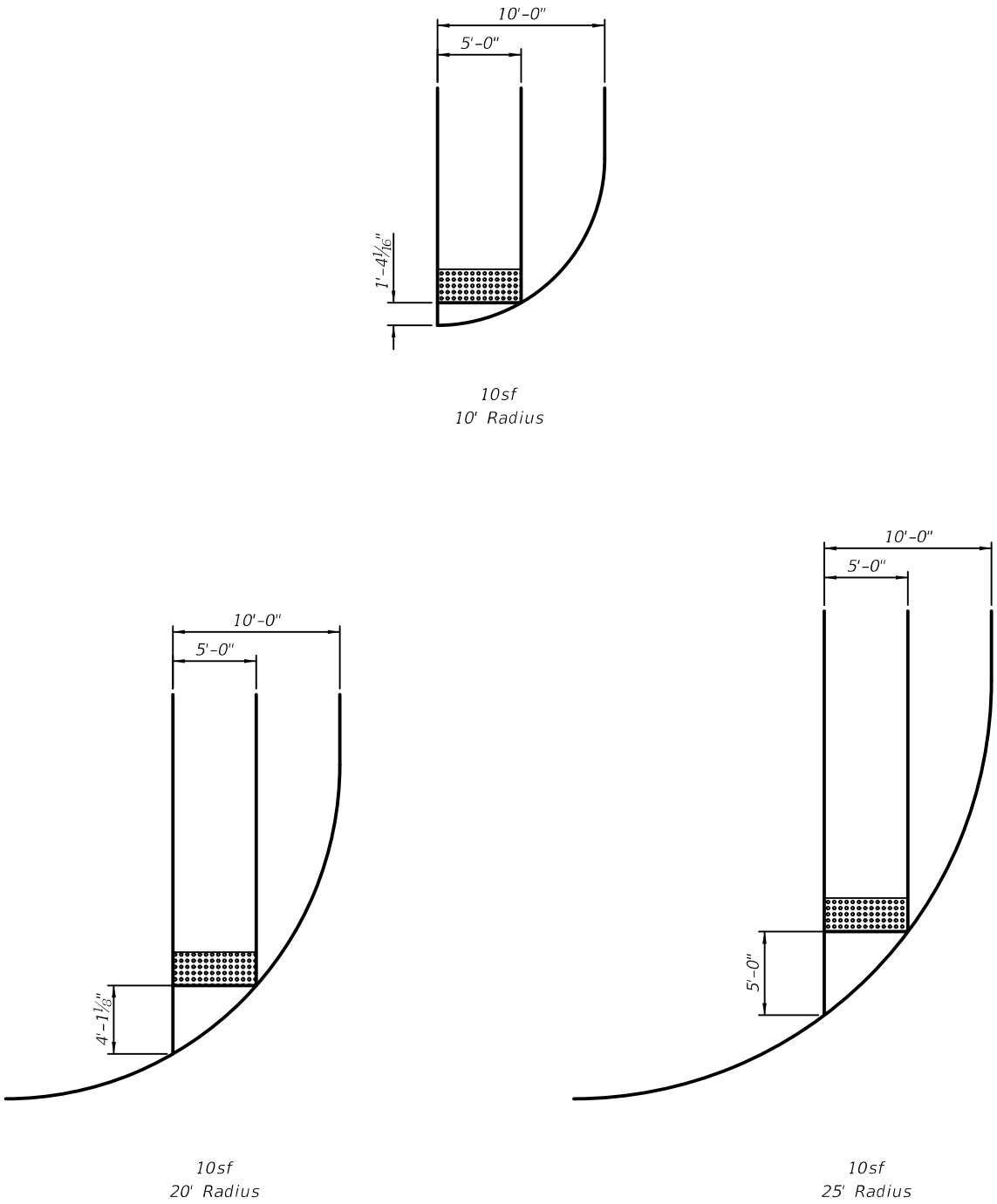

Flush Shoulder
Option B

Index 400 Guardrail (Rev. 11/16)

Design Criteria

Plans Preparation Manual (PPM) Volume 1, Chapter 4; ***AASHTO Roadside Design Guide***, 4th Edition; ***NCHRP Report 350***, Test Level 3 Criteria; ***AASHTO Manual for Assessing Safety Hardware (MASH)***, Test Levels 2 & 3 Criteria; ***AASHTO-AGC-ARTBA Task Force 13***, *A Guide to Standardized Highway Barrier Hardware*

Design Assumptions and Limitations

For guardrail requirements including crash test level classification, hazard setbacks, and placement offset in relation to curb, shoulders, shoulder gutter, and the Edge of Traveled Way, see ***PPM*** Volume 1, Section 4.4.

For guardrail requirements regarding Box Culverts, see ***PPM***, Volume 1, Section 33.10.

A. General:

Index 400 defines guardrail segments including General Guardrail, Low-Speed Guardrail, End Treatments, and Approach Transition Connections to Rigid Barrier that will be used together to design a complete guardrail configuration on a project-specific basis.

The design of guardrail requires that certain segments and features be shown and labeled correctly in the plans, where the requirements of the Index are not violated including section geometry, adjacent pavement, and grading.

For guardrail connections to Rigid Barrier, Index 400 applies only to newly constructed bridge Traffic Railings and Concrete Barriers or where the complete Approach Transition Connection to Rigid Barrier details shown in this Index can be installed without conflicting with existing Traffic Railings, structures, or bridge approach slabs.

For guardrail systems connecting to existing bridge Traffic Railings that conflict with Index 400 details, use the details, layouts, and length table methodology shown in Indexes 402 through 405.

B. Shielding Hazards - Determining Begin/End Guardrail Stations:

The standard method of determining guardrail placement for shielding hazards is based on the Runout Length and the Length of Need calculation in the ***AASHTO Roadside Design Guide (RDG)***, 4th Edition.

See the FDOT 'Guardrail Length of Need (LON)' program for additional information and assistance with determining Begin/End Guardrail Stations for shielding various hazard configurations. The program is located under Design Tools on the Design Standards website.

For example guardrail configurations for shielding hazards, including ends of rigid barriers, see Index 400 layouts and Example 1, below.

C. End Treatments:

An End Treatment segment is required for all guardrail ends where the guardrail does not transition into another barrier type (e.g. Approach or Trailing End Transition Connections to Rigid Barrier). End Treatments are divided into three types.

1. Trailing Anchorages: Place a Trailing Anchorage (Type II) on the downstream ends of all guardrail runs with respect to the nearest traffic lane, except where the location is within the Clear Zone of an opposing traffic lane.

2. Approach Terminals: Place an Approach Terminal on the approach ends of all guardrail runs, for all locations within the Clear Zone of an adjacent traffic lane.

   a. Terminal Types: Approach Terminals are defined in the Index and classified as Flared, Parallel, and Double Faced.

      i. Flared Approach Terminals: Use where raised curbs are not present and lateral clearance is available. This is the preferred option, because it provides shortest Length of Need requirement for shielding hazards and reduces driver propensity to shy away from the End Treatment under normal conditions.

      ii. Parallel Approach Terminals: Use for curbed conditions or where lateral clearance behind the End Treatment is limited.

      iii. Double Faced Approach Terminals: Use with Double Faced Guardrail segments. As an alternative, a Crash Cushion may be substituted for a Double Faced Approach Terminal as defined below.

   b. Length of End Treatment, 'LE': Predefined Approach Terminal lengths for corresponding crash Test Levels are defined in the Index and should be used in the Plans where possible. This allows for universal planning that is compatible across Approach Terminal products listed on the APL.

   c. Length of End Treatment, Custom Design Lengths: Where longitudinal space for Approach Terminals is limited, the designer may stipulate a location-specific 'Design Length' as shown on the manufacturer's APL drawings. The 'Design Length' is the shortest length of Approach Terminal required to function correctly as a crashworthy End Treatment, and it mostly consists of the proprietary segment of the Approach Terminal. When using the location-specific 'Design Length' method, the designer is responsible for ensuring the planned length accommodates the 'Design Length' as well as the midspan panel splice connection to the adjoining guardrail segment.

      In the Roadway Plan view, specify the 'Design Length' required within the Approach Terminal callout as well as make a reference to the Summary of Guardrail Note (e.g. "Design Length ≤ 25 Ft., See Summary of Guardrail Note"). In the Summary of Guardrail note, explain the Design Length requirement per manufacturer's APL Drawing (e.g. "Device requires a Design Length ≤ 25 Ft. per the manufacturer's APL Drawing").

d. Non-Gating Terminals: Where longitudinal space is limited upstream of the re-directive portion of end terminals, a Non-Gating terminal may be used. The gating portion of a Gating Terminal is typically upstream of post 3 or 4, but a Non-Gating Terminal removes this gating portion and places the Length of Need (or Departure Line) re-directive capability at post (1), thereby saving space. When using a Non-Gating terminal, ensure that longitudinal space requirements are met per the drawings on the APL.

   In the Roadway Plan view, specify "Non-Gating" preceding the Approach Terminal callout. Additionally, add a Summary of Guardrail note explaining "Device requires a Non-Gating design per the manufacturer's APL Drawing with redirective capability at Post (1)".

3. Crash Cushions (C.C.): Where applicable, use a Crash Cushion on the approach ends of double faced guardrail as a substitute for Double Faced Approach Terminals. Crash Cushion use should be considered for locations with an expected high frequency of severe impacts, such as within the gore area of a high speed facility. Additionally, some Crash Cushions may offer reduced length and maintenance cost advantages. See the Instructions for Design Standards for Index 430 for additional Crash Cushion information.

D. Approach Transition Connection to Rigid Barrier (Apprh. Trans.):

Approach Transition Connection segments are required for connecting guardrail to the approach end of Rigid Barriers, including both Concrete Barrier Walls and Traffic Railings. See the Index for design options including requirements for alignment, grading, and the Length of Approach Transition, 'LA', as required per the crash Test Level selected.

The minimum length for a complete guardrail system connected to a Rigid Barrier approach is tabulated as 7¼" plus 'LA' plus 'LE'. To further minimize length, 'LA' may be replaced as described in Paragraph C.2.c above (only where needed).

Guardrail systems attached to Rigid Barrier with a total length of 150 feet or less do not require a taper to the ***PPM*** offset and may run parallel to the Rigid Barrier's shoulder line prior to any Approach Terminal Flare.

The small lateral offset difference between Rigid Barrier Shoulder Line (at the toe) and the Face of Guardrail at their connecting point may be considered negligible and ignored for plan view labeling purposes (as noted in the Index).

For connections to existing bridge Traffic Railings that conflict with Index 400 details, use Indexes 402 through 405.

E. Pipe Rail:

Pipe Rail segments are required where Steel Posts will be located within 4 feet of sidewalks or shared use paths in the final condition. Pipe Rail must terminate within the limits of the posts outside of End Treatment and Approach Transition segments (At least 3'-1½" outside of 'LE', 'LT', 'LA', and/or Crash Cushion segments). See the Index for details.

To provide the Contractor an option of either Timber or Steel Posts, include the Pipe Rail in the Plans with quantities assuming Steel Posts are used (Unless the design prohibits the use of Steel Posts for other reasons).

F. Rub Rail:

Place Rub rail on the median side of Double Faced Guardrail, where approaching median slopes are greater than 1:10 per the Index. Additionally, rub rail may be used where justification is provided showing that the location has a high propensity for vehicle underride or a high percentage of motorcycle traffic.

G. Deep Posts:

With approval of the District Design Engineer and where right-of-way is restricted (i.e. constrained condition), Deep Posts may be used with the slope break located at the post centerline as defined per the Slope Break Condition in the Index.

Deep Posts are only permitted for segments with a post spacing of 6'-3" or less.

H. Modified Mounts - Special Posts:

When the required post spacing results in placement of posts atop concrete structures, concrete sidewalks, or subsurface utilities, use the Special Steel Posts, Frangible Leave-Outs, or Encased Post options respectively, as defined in the Index and in ***Specifications*** Section 536.

I. Guardrail Taper Rate:

Guardrail Locations will typically run parallel to traffic lanes, but certain conditions, such as a median crossover or a change in typical section, will require a change in guardrail offset. Use a linear taper (a.k.a. flare) to accommodate such changes in guardrail offsets. See the layouts in the Index as well as Example 1 below, where tapers are denoted by 'Begin/End Taper Station' callouts.

The 'Begin/End Taper Station' and offset callouts will define the linear Taper Rate for construction. For Design Speeds ≤ 45 MPH, use a maximum 1:10 Taper Rate. For Design Speeds > 45 MPH, use a maximum 1:15 Taper Rate. Where space is limited, Taper Rates may be refined by following the requirements of the RDG.

J. Median Crossover Guardrail - Double Faced:

When using an Approach Transition Connection to Rigid Barrier, use a Crossover Guardrail layout if the following conditions apply:

1. The end of an opposing lane's concrete Rigid Barrier is within the Clear Zone, aligned laterally across the median (typical with a bridge configuration).
2. The guardrail system is within the Clear Zone of the opposing lane's traffic
3. The guardrail system, including the End Treatment, will be designed for the minimum length.

NOTE: For guardrail systems only meeting the above criteria of (1.) and (2.) and that will be designed to continue beyond the minimum length, a basic Double Faced Guardrail segment would be required.

This Crossover Guardrail layout includes a taper segment, which reduces the Length of Need required for shielding the opposing lane's concrete railing while also using Double Faced Guardrail to shield the opposing lane's traffic. See the layouts in the Index as well as Example 1 below, for more details.

When measuring the length of a Crossover Guardrail layout, tabulate the entire run of guardrail, including the length of the Approach Transition Connection, as Double Face Guardrail. See Example 3 below for an example layout showing measurement limits.

K. Reduced Post Spacing Segments:

Where hazards must be located closer than 5 feet behind the Face of Guardrail, Reduced Post Spacing may be used to decrease the required Setback Distance (the anticipated deflection distance of an impacted guardrail system). See ***PPM***, Table 4.4.2., for the decreased required Setback Distance per each Reduced Post Spacing.

Provide Reduced Post Spacing along the entire portion of the hazard(s) requiring a decreased Setback Distance. Place a minimum Reduced Post Spacing segment length of 25'-0" total, and begin the Reduced Post Spacing segment a minimum of 12'-6" upstream of the hazard(s) being shielded (relative to the direction of traffic receiving shielding).

Separate guardrail length tabulations are not required for Reduced Post Spacing segments.

L. Additional Offset Blocks:

Instead of the default single Offset Block, use either two or three Offset Blocks such that the resulting post placement, moved farther behind the Face of Guardrail, will avoid a post conflict with an obstacle (e.g. sidewalks, gutter, underground utilities, concrete drainage structures, or other permanent obstacles).

Each additional Offset Block will move the post 7.5 inches further behind the Face of Guardrail. When considering Setback Distances to hazards per ***PPM*** Volume 1, Table 4.4.2, add 7.5 inches to the required Setback Distance for each additional Offset Block used.

M. CRT Segments:

Where a guardrail segment will connect with a perpendicular guardrail segment (e.g. rounding into side streets or driveways), design the guardrail segment following the requirements of the corresponding CRT layout as shown in the Index. Ensure that the Clear Area shown is not violated.

N. Slope Guards:

Where no other wall or structure is used to delineate the abutment’s drop-off, place Slope Guards between bridge approaches as shown in the Index layouts, and label them per the examples shown below in Example 1. End Treatments are not required.

NOTE: Slope Guards are intended to deter maintenance vehicles from traveling beyond the slope edge; Slope Guards are not considered crashworthy for roadway vehicles.

Include Slope Guards as individual guardrail length entries in the Summary of Guardrail table. Assume the guardrail type to be the same as the majority of adjacent guardrail used (typically General TL-3 or Low-Speed TL-2). Include the Approximate Station and length for each Slope Guard entry.

Plan Content Requirements

For the Plans sheets listed below, show the guardrail system to scale, including a depiction of the post, offset block, and panel type in its design location.

A. Typical Sections

Design and label the 'Lateral Offset' from the Face of Curb or Edge of Traffic Lane as it corresponds to the Guardrail Sections sheet in the Index.

Meet the offset requirements of the ***PPM*** and the adjacent grading requirements as shown in the Index.

B. Cross Sections

Meet the offset requirements of the ***PPM*** and the adjacent grading requirements as shown in the Index.

C. Roadway Plan

Begin/End Station and Offset: Label the Station and Offset (From the Station Reference, Centerline or Baseline) for the Face of Guardrail at the locations with corresponding Begin/End Stations shown in the Index, including the following:

1. Begin/End GR. Stations label the limits of the guardrail length measurement, generally located at centerline of Post (1) in End Treatments and/or at the Terminal Connector splice of an Approach Transition Connection segment. See the Index layouts for details.

   If Low-Speed (TL-2) guardrail is required, change this label to "Begin/End TL-2 GR."

2. Begin/End Taper Stations label the offset Face of Guardrail locations for the start and end of linear tapers (e.g. for a change in typical section or for a Crossover Taper segment). The Guardrail Taper Rate requirements above will govern these transitions.

3. Begin/End CRT(8, 16, 24, or 32) Ft. R. Station labels the starting point for the Controlled Release Terminal (CRT) System and the radius, 'R'.

4. Begin/End Pipe Rail Stations label the limits of Pipe Rail length measurement, generally located at centerline of the Terminal Posts.

5. Begin/End Rub Rail Stations label the limits of Rub Rail length measurement, generally located at centerline of the Terminal Posts. NOTE: This is not depicted in the Index.

   For Double Face Guardrail, place labels pointing to Face of Guardrail on the side requiring the Rub Rail. If Rub Rail is required on both sides, use a different label on each side or add "(Both Sides)" to the callout.

6. Begin/End Half Sp. Stations label the limits of Reduced Post Spacing at 3'-1½". The overall length of this segment must be a multiple of 6'-3".

7. Begin/End Quarter Sp. Stations label the limits of Reduced Post Spacing at 1'-6¾". The overall length of this segment must be a multiple of 6'-3".

Label the Station and Offset at the Face of Guardrail for the following guardrail end features:

1. TL-2 Flared Terminal
2. TL-2 Parallel Terminal
3. TL-2 Dbl. Faced Terminal
4. TL-3 Flared Terminal
5. TL-3 Parallel Terminal
6. TL-3 Dbl. Faced Terminal
7. C.C.
8. Type II Anchorage
9. CRT End Treatment
10. TL-2 Apprh. Trans.
11. TL-3 Apprh. Trans.

NOTE: The above labels may be included with the Begin/End Guardrail Station callouts.

Label the Station and Offset at the Face of Guardrail for the following guardrail miscellaneous features:

1. Encased Post
2. Special Steel Post
3. Frangible Leave-Out
4. Deep Post
5. Two Offset Blocks
6. Three Offset Blocks
7. GR. Slope Guard

D. Summary of Guardrail Table:

Tabulate the individual Pay Items as defined in the Basis of Estimates Manual (BOE) and ***Specifications*** Section 536. Produce the Summary of Guardrail table and include it in the Plans. The Department's CADD tools, including the Design and Computation Manager and Data Link Manager, may be used to assist in populating the table. See the Engineering / CADD Systems Office website for details.

The location call-outs of guardrail segments will be listed as Station to Station, but the length of the corresponding segments must be measured along the centerline of the panels and include the effect of curvature. See Example 2 and Example 3 below for details.

For guardrail measurement, the total length of a guardrail run must equal the basic guardrail length (General or Low-Speed Guardrail) at a multiple of 6'-3", plus the applicable End Treatment length(s) and Approach transition Connection length.

Payment

Item number	Item description	Unit Measure
536-1-XXX	Guardrail	LF
536-5-XXX	Rub Rail	LF
536-6-XXX	Pipe Rail	LF
536-7-XXX	Special Guardrail Post	EA
536-8-XXX	Bridge Anchorage Assembly / Approach Trans. Connection to Rigid Barrier	EA
536-73-XXX	Removal of Existing Guardrail	LF
536-85-XXX	Guardrail End Treatment	EA

EXAMPLES

Example 1 Basic Layouts for Shielding Hazards (1 of 3)

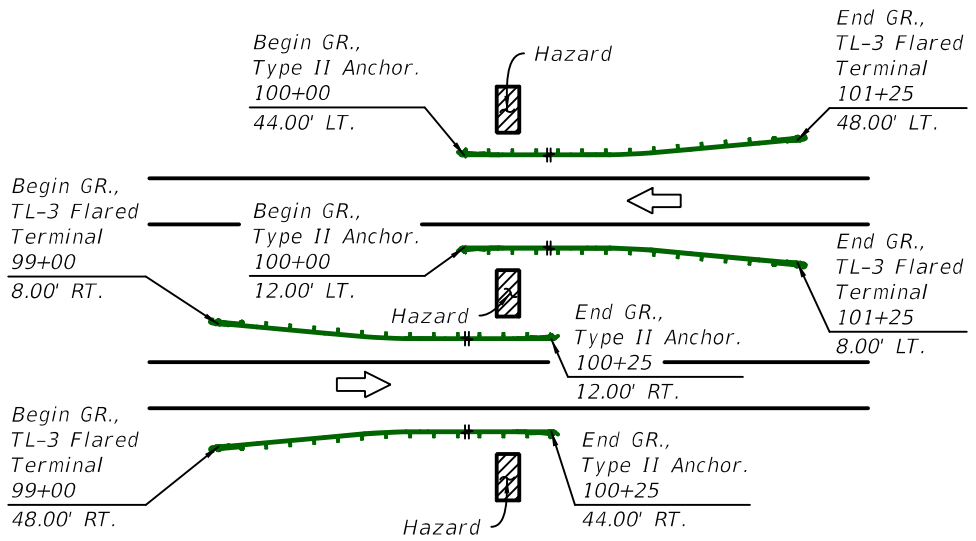

TYPICAL HAZARD SHIELDING EXAMPLE: ROADSIDE AND MEDIAN BACK OF GUARDRAIL OUTSIDE OF OPPOSING LANE'S CLEAR ZONE ('LON' Program Part 'A')

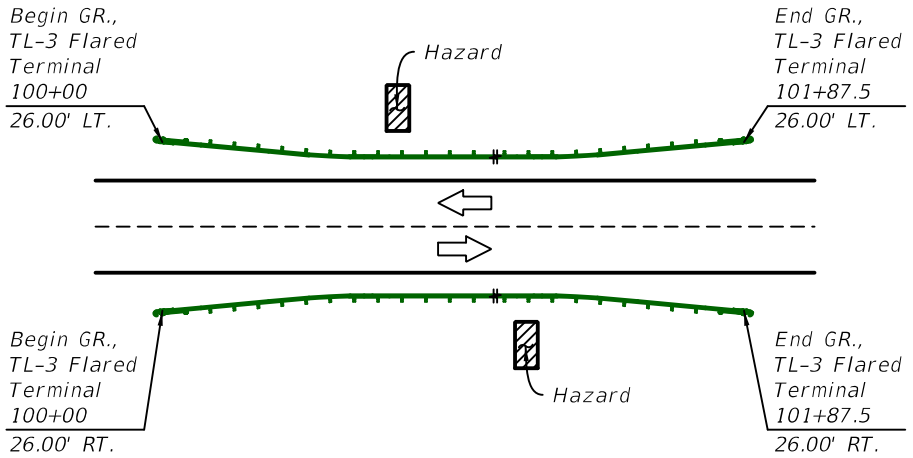

TYPICAL HAZARD SHIELDING EXAMPLE: 2-LANE, 2-WAY ROAD HAZARD OR GUARDRAIL END WITHIN OPPOSING LANE'S CLEAR ZONE ('LON' Program Parts 'A' & 'B')

Example 1 Basic Layouts for Shielding Hazards (2 of 3)

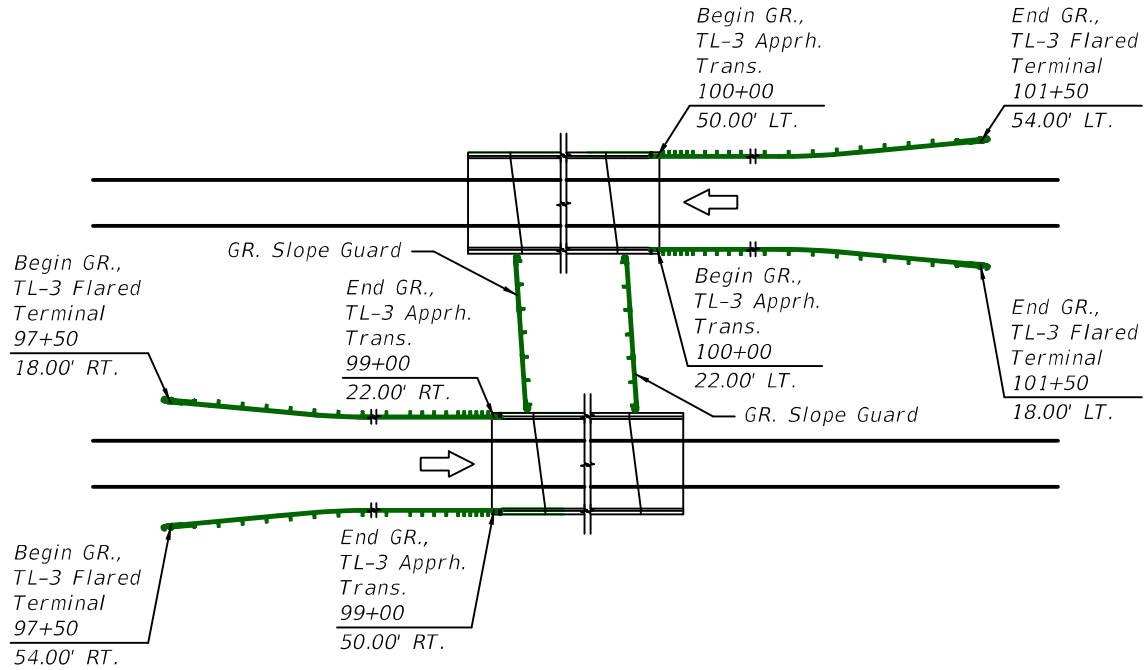

BRIDGE RAILING SHIELDING EXAMPLE:
OPPOSING LANE'S CONCRETE RAILING OUTSIDE OF CLEAR ZONE

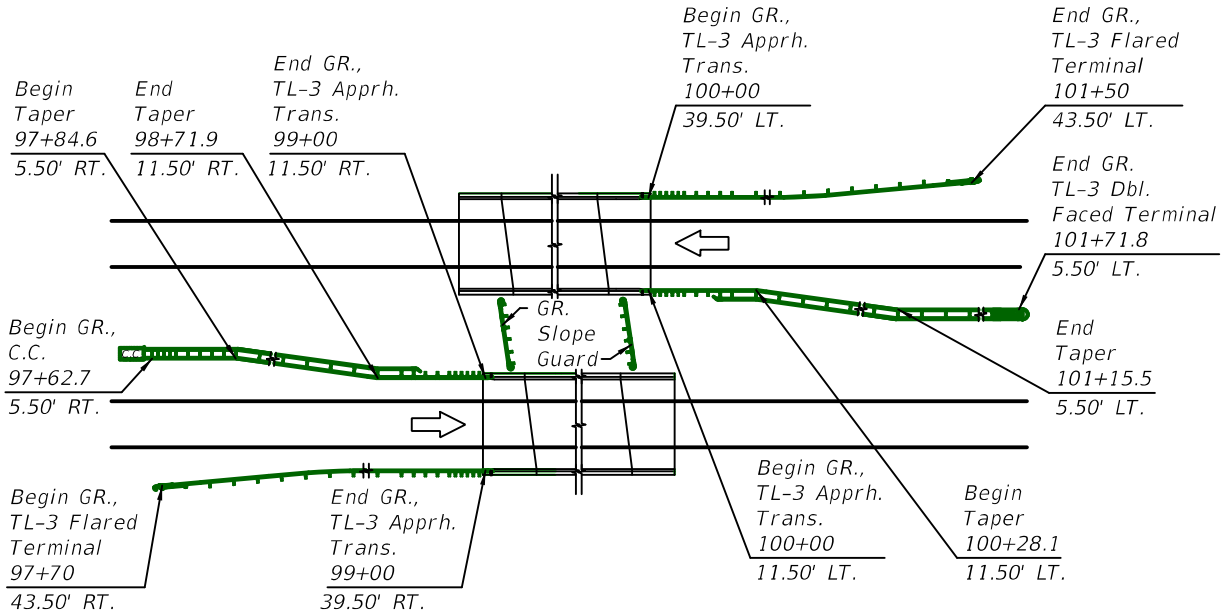

BRIDGE RAILING SHIELDING EXAMPLE: 'CROSSOVER GUARDRAIL'
OPPOSING LANE'S CONCRETE RAILING WITHIN CLEAR ZONE
('LON' Program Part 'C' or 'D')

Example 1 Basic Layouts for Shielding Hazards (3 of 3)

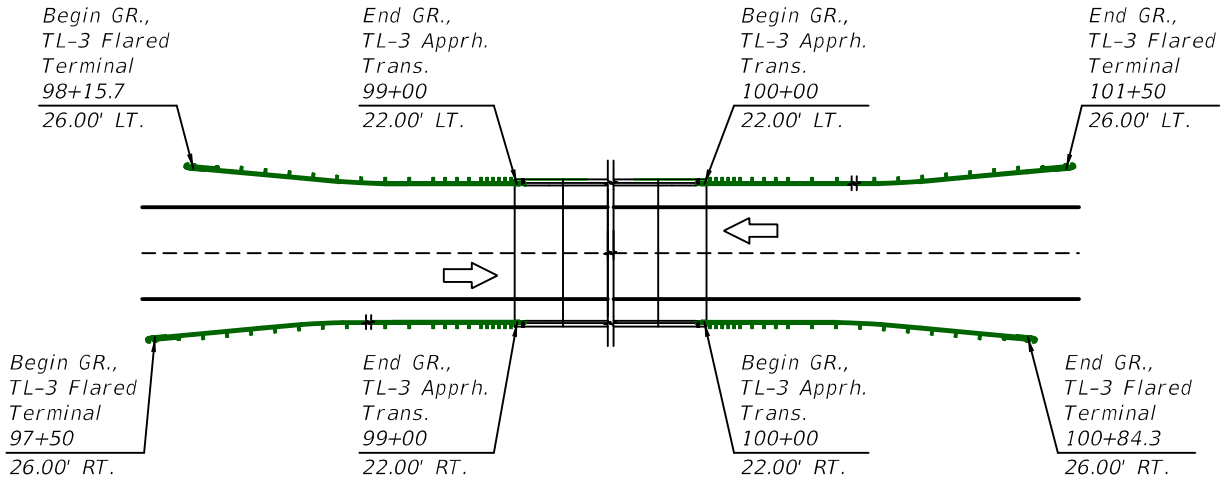

BRIDGE RAILING SHIELDING EXAMPLE: 2-WAY, 2-LANE ROAD CONCRETE RAILING WITHIN OPPOSING LANES' CLEAR ZONE (Min. Length Guardrail Shown)

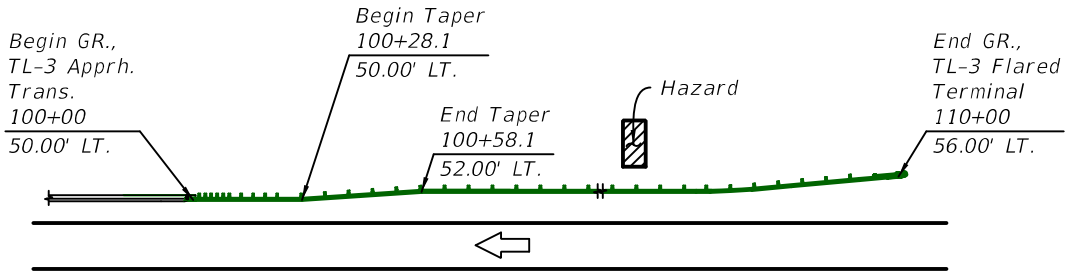

TAPER TO DIFFERING GUARDRAIL OFFSET EXAMPLE: (Where General or Low-Speed guardrail run has a different offset from the Approach Transition Connection)

Example 2 Guardrail Length (LF) Measurements (1 of 2)

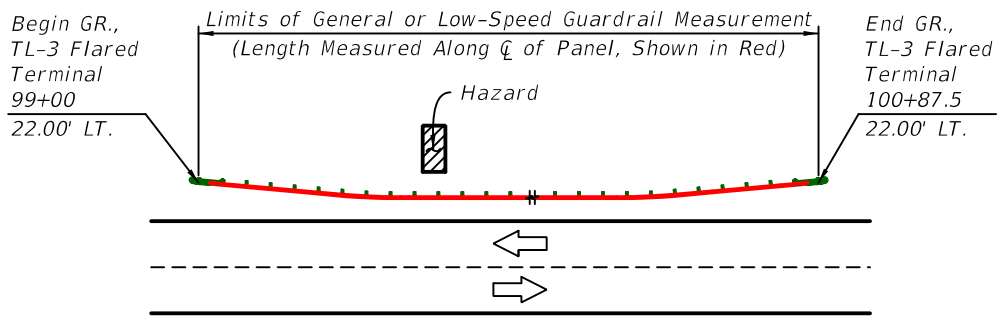

GUARDRAIL LENGTH MEASUREMENT EXAMPLE:
END TREATMENTS AND BASIC RUN
Include End Treatment lengths added as the basic connecting guardrail type, such as General or Low-Speed Guardrail (End Treatment Pay Items consider costs as over-and-above basic guardrail)

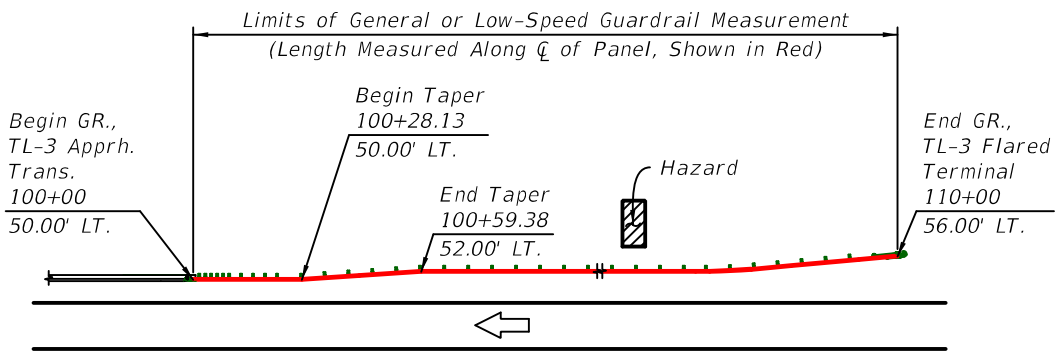

GUARDRAIL LENGTH MEASUREMENT EXAMPLE:
APPROACH TRANSITION CONNECTION, BASIC RUN, & END TREATMENT
Include End Treatment and Approach Transition Connection lengths added as the basic connecting guardrail type, such as General or Low-Speed Guardrail (End Treatment and Approach Transition Connection Pay Items consider costs as over-and-above basic guardrail)

Example 2 Guardrail Length (LF) Measurements (2 of 2)

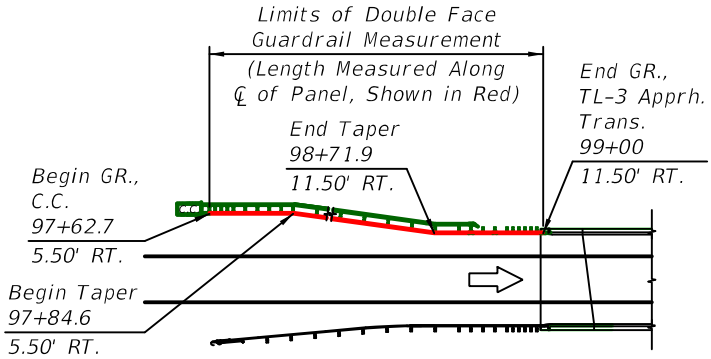

GUARDRAIL LENGTH MEASUREMENT EXAMPLE:
'GUARDRAIL CROSSOVER' APPROACH TRANSITION CONNECTION
Tabulate the layout as Double Face Guardrail, including the Approach Transition. (Measure to Begin/End GR. as shown at Post (1) per Index 430; the Design Length of Crash Cushions per the APL Drawing is not included)

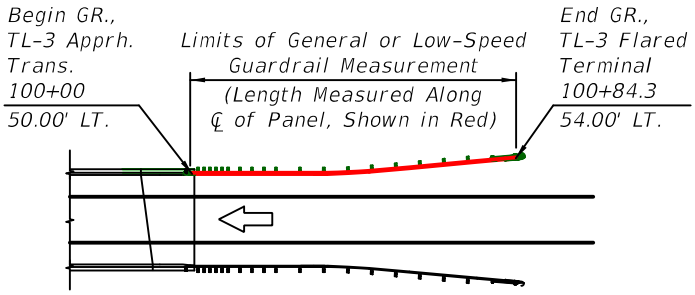

GUARDRAIL LENGTH MEASUREMENT EXAMPLE:
APPROACH TRANSITION CONNECTION AND END TREATMENT ONLY
Tabulate the End Treatment and Approach Transition lengths as basic W-Beam General Guardrail. (End Treatment and Approach Transition Connection Pay Items consider costs as over-and-above basic guardrail)

Example 3 Miscellaneous Pay Item Length (LF) Measurements

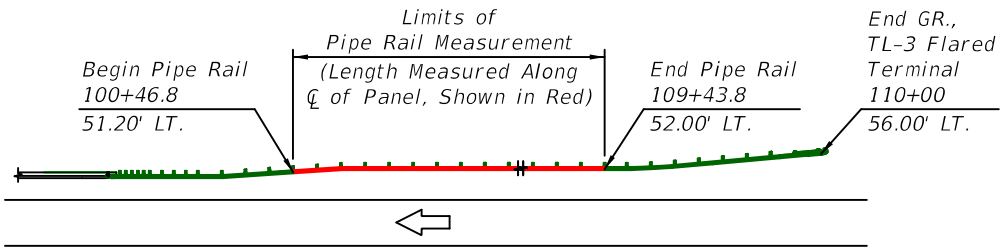

PIPE RAIL LENGTH MEASUREMENT EXAMPLE

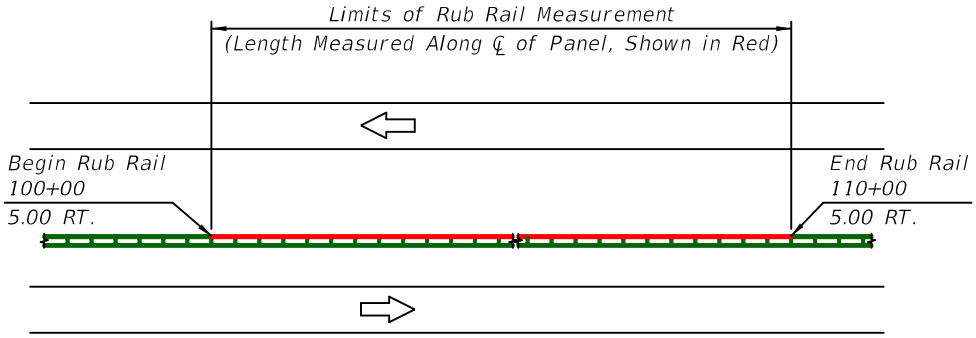

RUB RAIL LENGTH MEASUREMENT EXAMPLE

Index 402 Guardrail Transitions and Connections for Existing Bridges (Rev. 11/16)

Design Criteria

NCHRP Report 350; ***AASHTO LRFD Bridge Design Specifications***, 6th Edition, Section 13; ***Structures Design Guidelines (SDG)***

Design Assumptions and Limitations

This standard contains details for attaching thrie beam guardrail approach transition retrofits to Index 470 and 480 Series bridge railing retrofits and also to existing safety shape bridge traffic railings. Use this standard with Indexes 410, 470, 471, 472, 473, 474, 475, 476, 480, 481, 482, 483 and 484.

The appropriate Index 402 approach transition retrofit for Index 470 and 480 Series bridge railing retrofits must be selected and specified in the plans based on the shapes and designs of the existing bridge traffic railings, approach slabs and end bent wing walls. See the ***Instructions for Design Standards*** for Index 470 and Index 480 and ***SDG*** 6.7 for more information.

The following three sections of instructions address the use of Index 402 with existing safety shape bridge traffic railings:

1. A Historical Compilation of Superseded Florida Department of Transportation "Structures Standard Drawings" for "F" and "New Jersey" Shape Structure Mounted Traffic Railings
2. Guardrail Approach Transition Retrofit Instructions for Existing Flat Slab Bridges
3. Guardrail Approach Transition Retrofit Instructions for Existing Beam/Girder Bridges

Index 402 Thrie-Beam Guardrail transition retrofits are bolted to existing safety shape bridge traffic railings through field drilled holes utilizing the pre-drilled Thrie-Beam Terminal Connector as a template. This method of attachment creates the potential for conflicts between the new attachment bolts and existing utilities and/or conduits. Compare the locations of the new attachment bolts with the positions of any existing utilities and/or conduits. Guidance is provided on Index 402 for selecting a bolt pattern for the Thrie-Beam Terminal Connector that may avoid existing utilities and/or conduits. Existing utilities and/or conduits that conflict with the possible bolt patterns shall be relocated if possible or placed out of service. Include all necessary utility adjustment information in the Roadway Plans.

1. A Historical Compilation of Superseded FDOT Structures Standard Drawings for "F" and "New Jersey" Shape Structure Mounted Traffic Railings:

The following list of superseded standard drawings and associated railing typical sections and end transition details are presented as a historical reference for use when evaluating existing safety shape structure mounted traffic railings.

Utilities and/or conduits may exist in or adjacent to existing traffic railings and will vary in size, number and location. Utilities and/or conduits are not shown on these railing typical sections or end transition details.

Welded Wire Reinforcing (WWR) may have been used in place of the conventional reinforcing steel shown on the railing typical sections. Reinforcing steel was not standardized for railing end transitions but was instead included with the end bent reinforcing steel as a project specific design. Thus, some degree of variability can be expected for this reinforcing steel.

Superseded FDOT Structure Mounted Traffic Railing Standards			
Standard Index No.	**Railing Type**	**Drawing Date**	**Revision Date(s)**
11407	New Jersey	3/74	10/74
11407	New Jersey	3/78	10/77, 1/78, 9/78, 7/80, 3/81 & 8/81
11460	New Jersey	5/74	6/75, 8/75, 10/77, 9/78, 3/80, 7/80, 3/81, 8/81 & 5/82
12670	New Jersey	3/78	1/81 & 8/81
12931	New Jersey	1/79	3/81, 8/81, 10/84 & 11/84
13857	New Jersey	10/83	11/84
14101	New Jersey	1/86	N.A.
14286	F	9/87	10/87, 11/87, 12/87 & 1/88
700 (English Units)	F	2/89	1990, 1992 & 1994
700 (Metric Units)	F	2/89	1994, 1996, 1997 & 1998

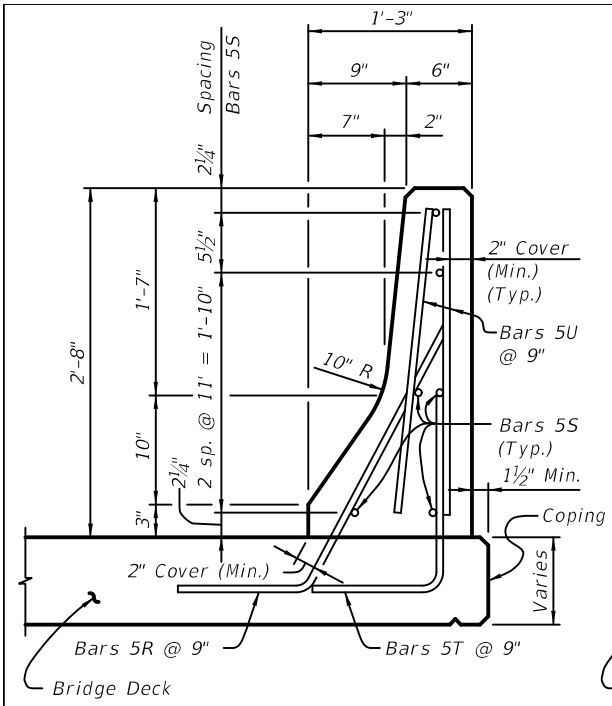

TYPICAL SECTION THRU
NEW JERSEY SHAPE RAILING
INDEX NOS. 11407 & 11460
(Index No. 11407 shown, Index No. 11460 similar)

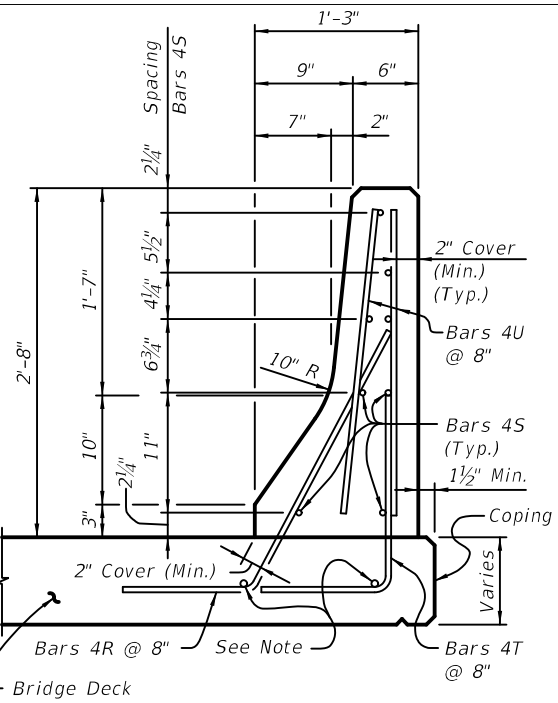

TYPICAL SECTION THRU
NEW JERSEY SHAPE RAILING
INDEX NOS. 11407, 11460, 12670 & 12931
(Index No. 11407 shown,
Index Nos. 11460, 12670 & 12931 similar)

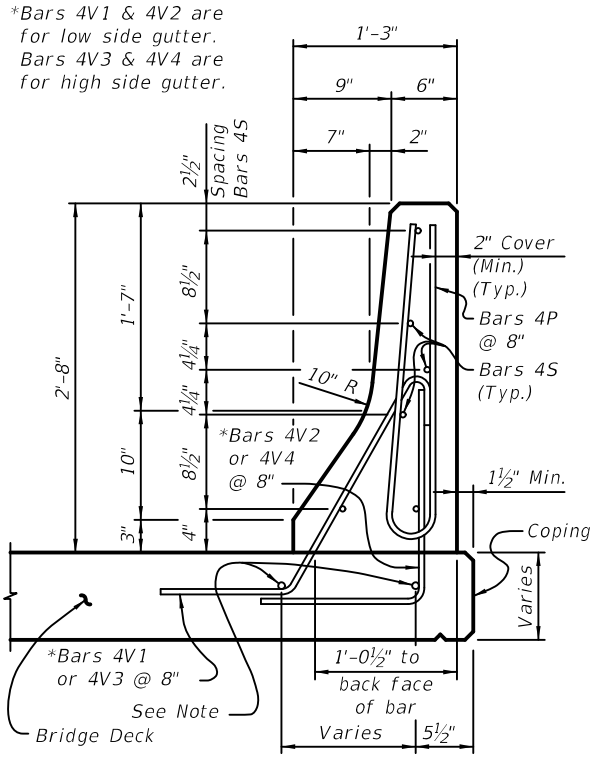

TYPICAL SECTION THRU
NEW JERSEY SHAPE RAILING
INDEX NO. 13857 & 14101

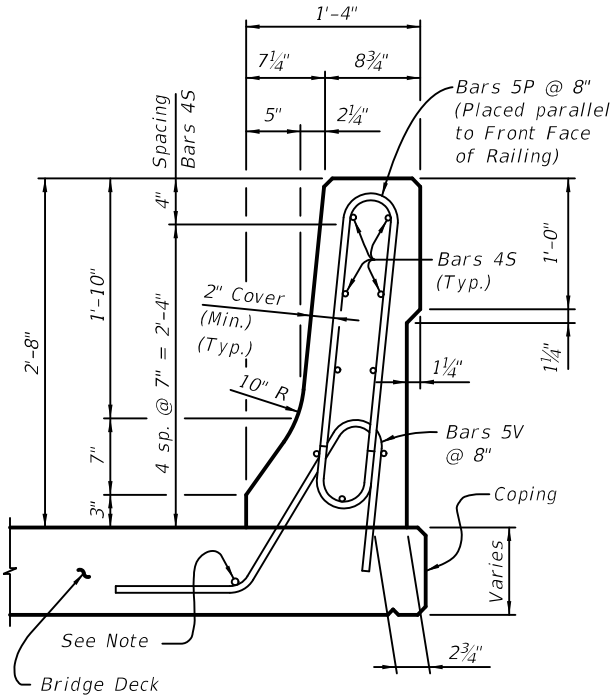

TYPICAL SECTION THRU
F SHAPE RAILING
INDEX NO. 14286

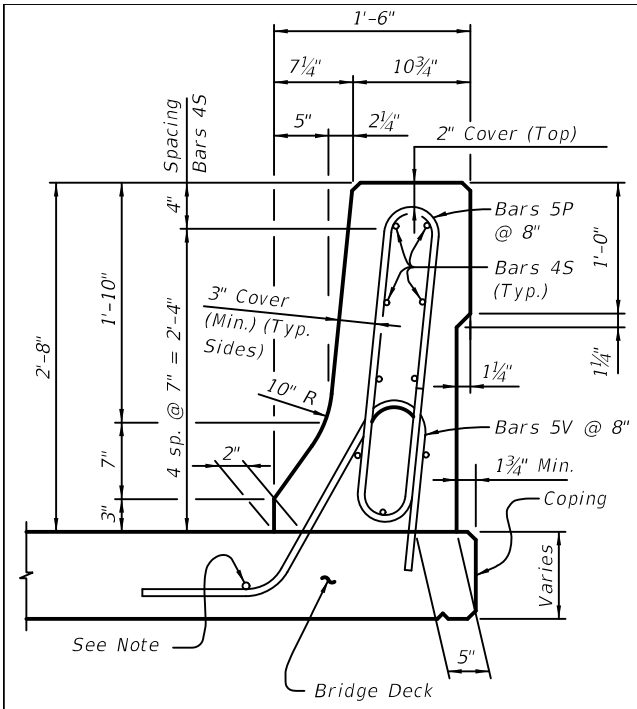

TYPICAL SECTION THRU
F SHAPE RAILING
INDEX NO. 700

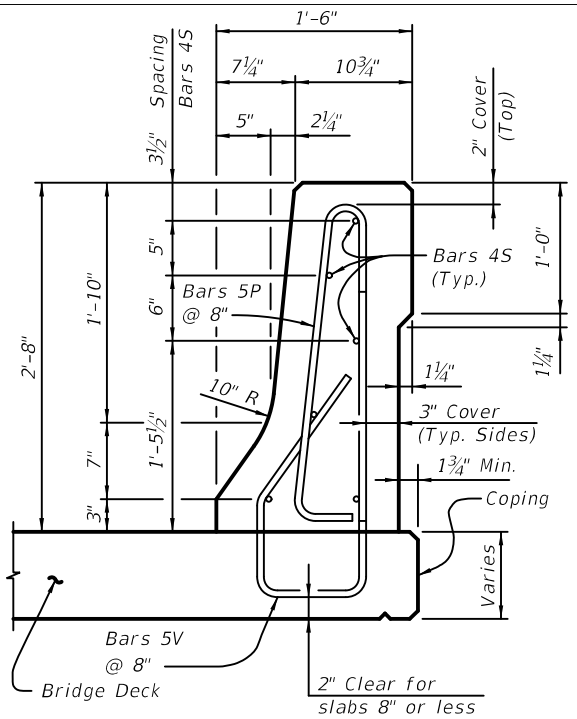

TYPICAL SECTION THRU
F SHAPE RAILING
INDEX NO. 700

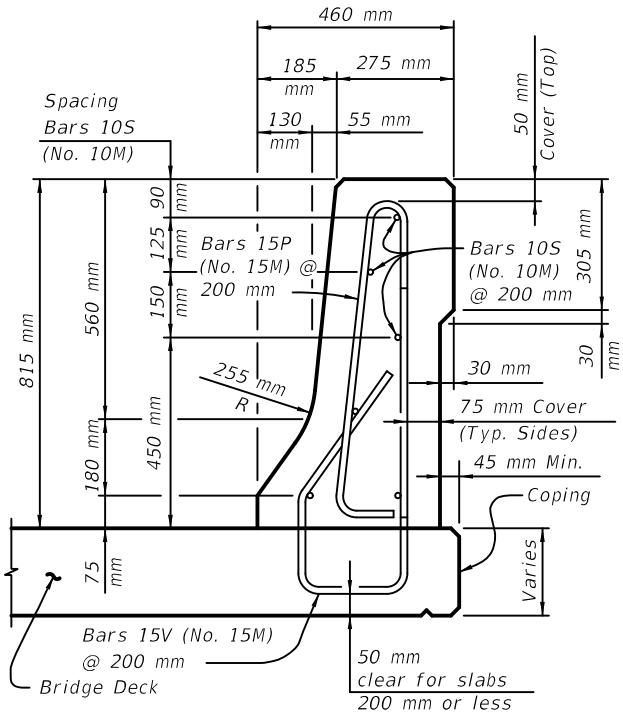

TYPICAL SECTION THRU
F SHAPE RAILING
(Metric with hard converted rebar)
INDEX NO. 700

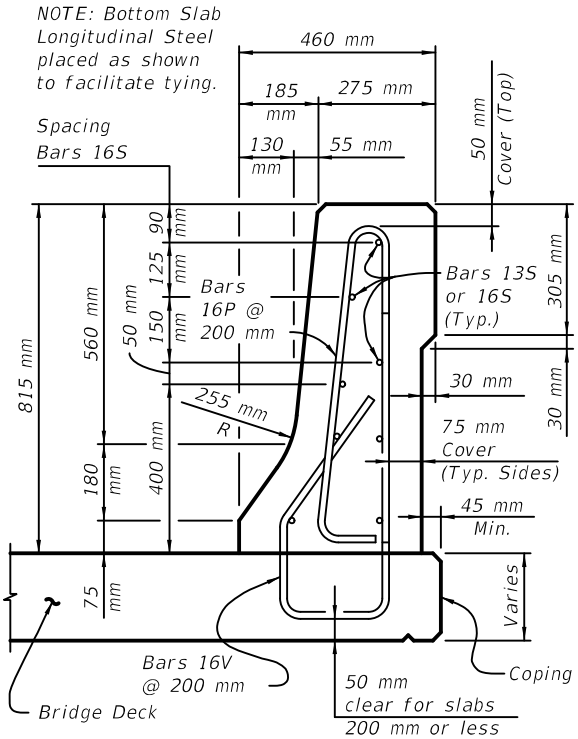

TYPICAL SECTION THRU
F SHAPE RAILING
(Metric with soft converted rebar)
INDEX NO. 700

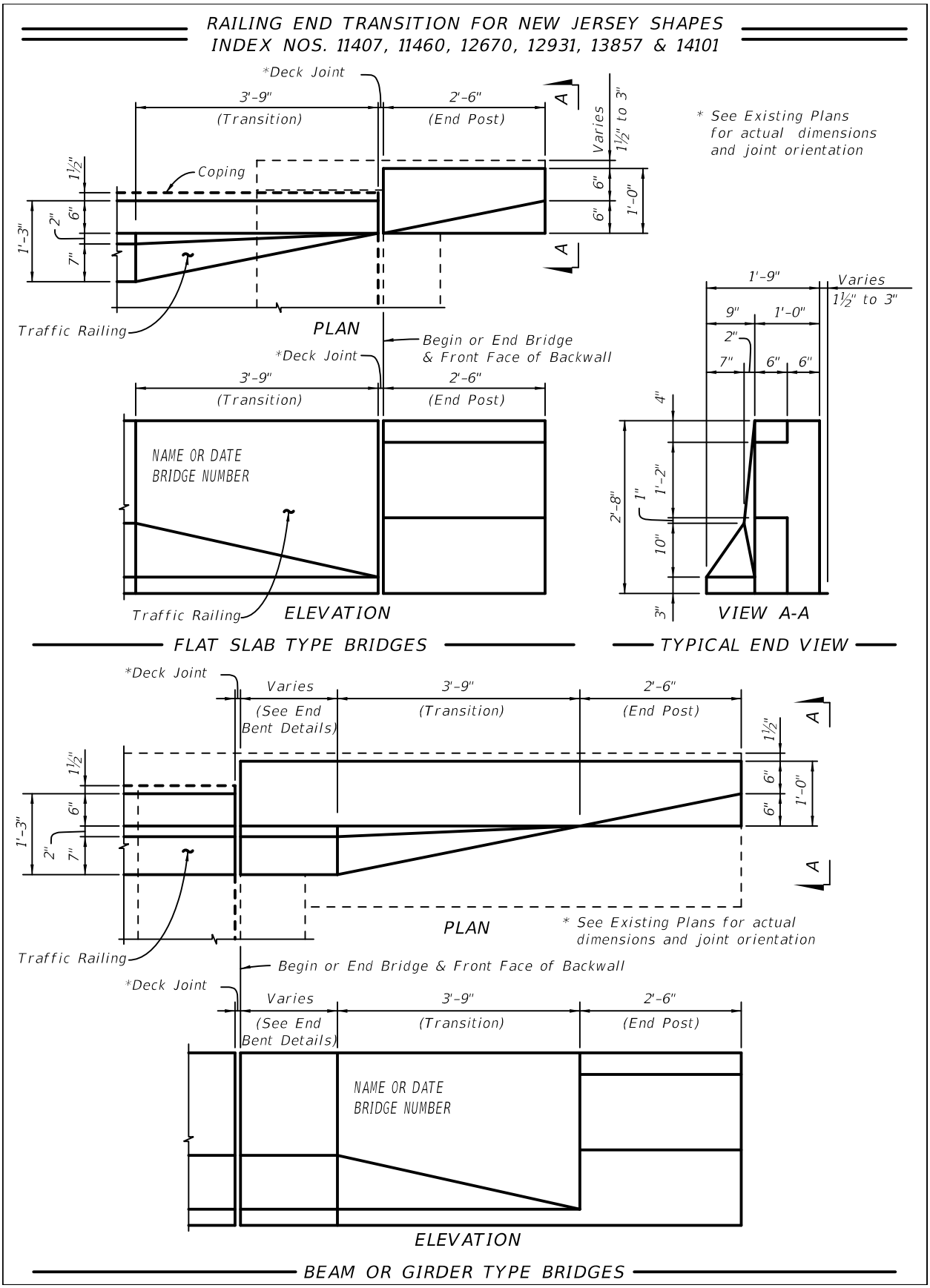
RAILING END TRANSITION FOR NEW JERSEY SHAPES
INDEX NOS. 11407, 11460, 12670, 12931, 13857 & 14101
*Deck Joint
3'-9"
(Transition)
2'-6"
(End Post)
Varies
1½" to 3"
* See Existing Plans for actual dimensions and joint orientation
Coping
1½"
6"
2"
7"
1'-3"
6"
6"
1'-0"
A
A
Traffic Railing
PLAN
Begin or End Bridge & Front Face of Backwall
*Deck Joint
3'-9"
(Transition)
2'-6"
(End Post)
NAME OR DATE
BRIDGE NUMBER
Traffic Railing
ELEVATION
FLAT SLAB TYPE BRIDGES
1'-9"
Varies
1½" to 3"
9"
1'-0"
2"
7"
6"
6"
4"
1'-2"
1"
10"
2'-8"
3"
VIEW A-A
TYPICAL END VIEW
*Deck Joint
Varies
(See End Bent Details)
3'-9"
(Transition)
2'-6"
(End Post)
1½"
6"
6"
1'-0"
1½"
6"
2"
7"
1'-3"
A
A
PLAN
* See Existing Plans for actual dimensions and joint orientation
Traffic Railing
Begin or End Bridge & Front Face of Backwall
*Deck Joint
Varies
(See End Bent Details)
3'-9"
(Transition)
2'-6"
(End Post)
NAME OR DATE
BRIDGE NUMBER
ELEVATION
BEAM OR GIRDER TYPE BRIDGES

RAILING END TRANSITION FOR F SHAPES - INDEX NO. 14286

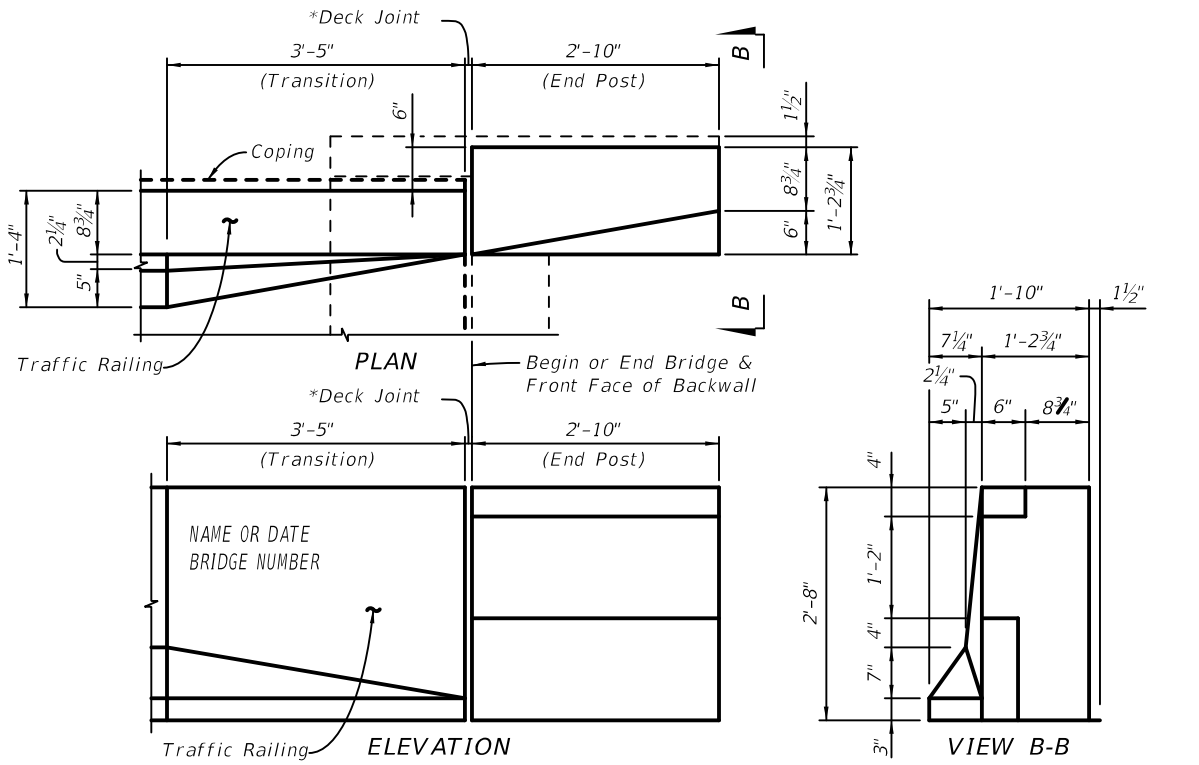

FLAT SLAB TYPE BRIDGES — TYPICAL END VIEW

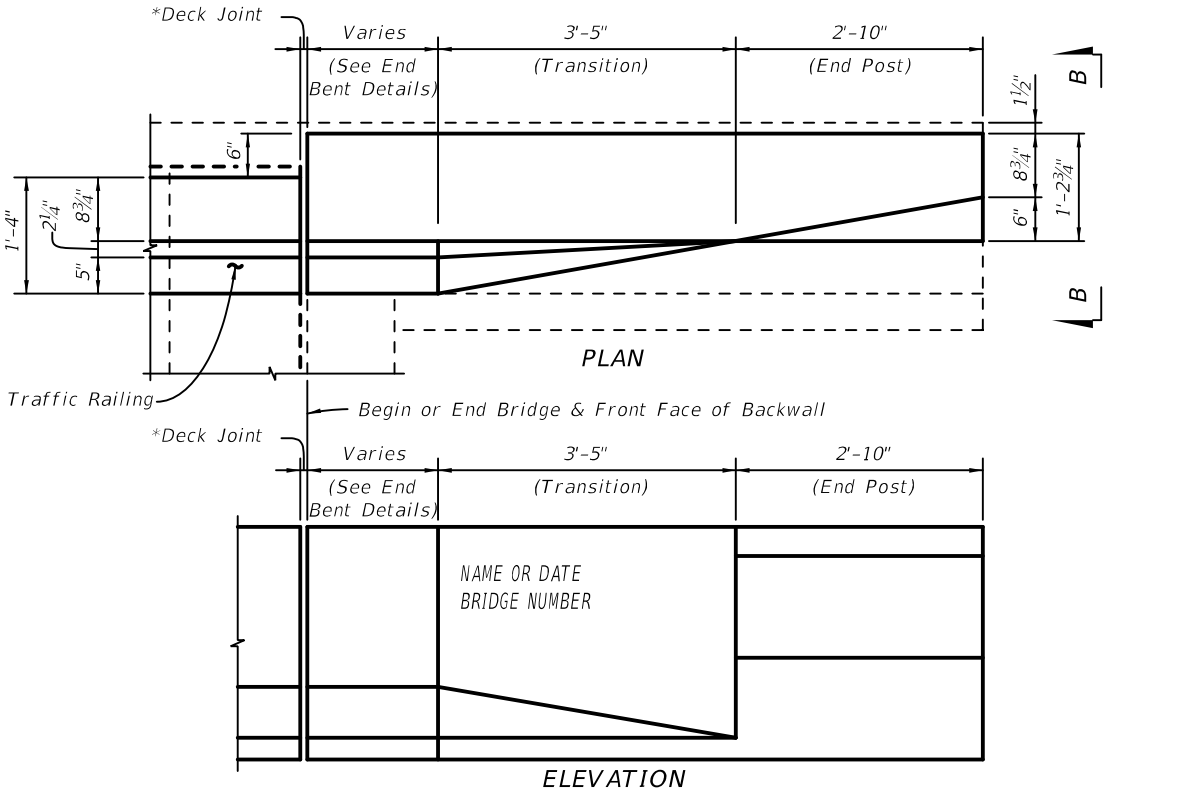

BEAM OR GIRDER TYPE BRIDGES

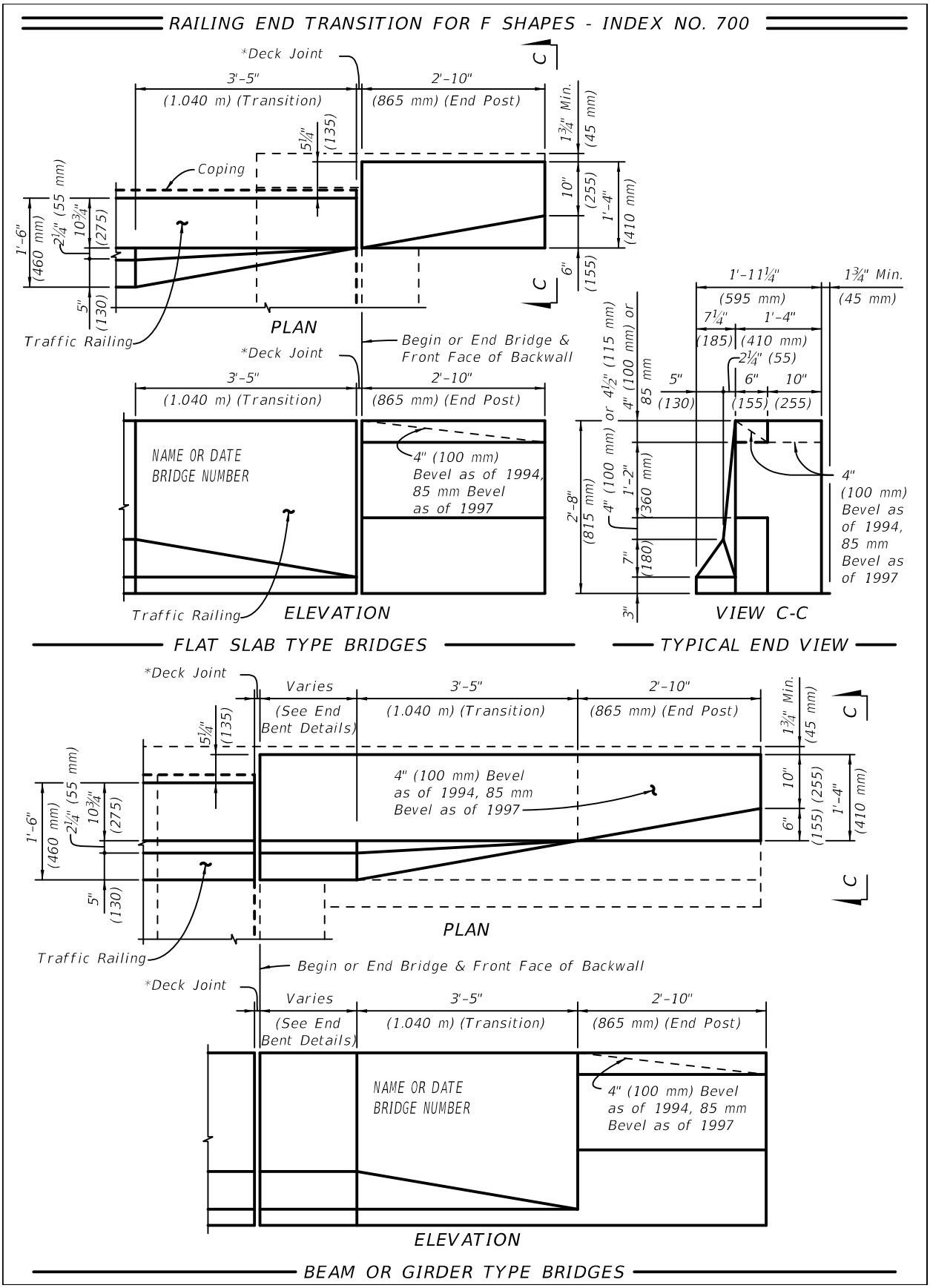
RAILING END TRANSITION FOR F SHAPES - INDEX NO. 700
*Deck Joint
3'-5"
(1.040 m) (Transition)
2'-10"
(865 mm) (End Post)
1¾" Min.
(45 mm)
5¼"
(135)
Coping
1'-6"
(460 mm)
2¼" (55 mm)
10¾"
(275)
5"
(130)
10"
(255)
1'-4"
(410 mm)
6"
(155)
C
Traffic Railing
PLAN
Begin or End Bridge & Front Face of Backwall
NAME OR DATE
BRIDGE NUMBER
4" (100 mm) Bevel as of 1994, 85 mm Bevel as of 1997
ELEVATION
FLAT SLAB TYPE BRIDGES
1'-11¼"
(595 mm)
7¼"
(185)
1'-4"
(410 mm)
2¼" (55)
5"
(130)
6"
(155)
10"
(255)
4" (100 mm) or 4½" (115 mm) or 85 mm
2'-8"
(815 mm)
4" (100 mm)
1'-2"
(360 mm)
7"
(180)
3"
VIEW C-C
TYPICAL END VIEW
Varies
(See End Bent Details)
4" (100 mm) Bevel as of 1994, 85 mm Bevel as of 1997
PLAN
ELEVATION
BEAM OR GIRDER TYPE BRIDGES

2. Guardrail Approach Transition Retrofit Instructions for Existing Flat Slab Bridges:

These instructions are applicable only to bridges with concrete flat slab superstructures.

The retrofitting of existing "W" beam guardrail transitions is accomplished by installing new Thrie-Beam Guardrail transitions in accordance with Scheme A or Scheme B as presented herein. It is permissible to use both Scheme A and Scheme B on a single bridge as required; e.g. Scheme A at begin bridge and Scheme B at end bridge. Scheme A shall be considered as the preferred choice for retrofitting the existing guardrail transitions. Scheme B should only be used where Scheme A is not applicable. Use of either scheme is dependent on the existing Traffic Railing and End Transition being in sound structural condition, for the portions that will remain in place.

Flat Slab Scheme A

The Thrie-Beam Guardrail transition retrofit details shown in Scheme A are applicable for existing bridges meeting both of the following requirements:

1. The existing bridge Traffic Railings are "F" or "New Jersey" shape railings conforming to one of the superseded FDOT standard designs shown in Section 1 of these Instructions (see above).
2. The total amount of thermal movement at the bridge end expansion joint does not exceed 1½" (¾" in each direction). The total amount of thermal movement at the expansion joint shall be determined by theoretical calculation and confirmed by field measurement where possible. It should be noted that the actual in-service movement due to thermal effects may be less than the value determined by theoretical calculation.

If both of the above requirements cannot be met, then Scheme B shall be evaluated for use. If both of the above requirements are met, the Scheme A details shown below and the following guidelines shall be used to assist in the preparation of the plans.

Generally, if Scheme A is applicable, Structures Plans will not be required for the Thrie-Beam Guardrail transition retrofit. Only Roadway Plans which include a reference to ***Design Standards*** Index 402, Sheet 24 of 24, Scheme I are required.

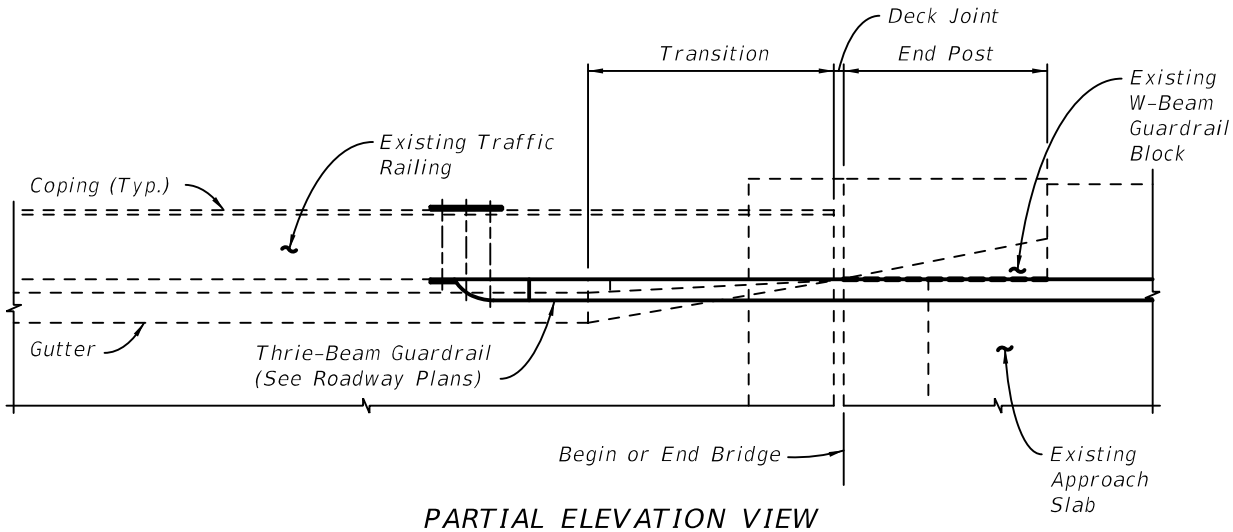

PARTIAL ELEVATION VIEW
(Existing W-Beam Guardrail to be removed not shown for clarity.
"F" Shape Railing shown, "New Jersey" Shape Railing similar)

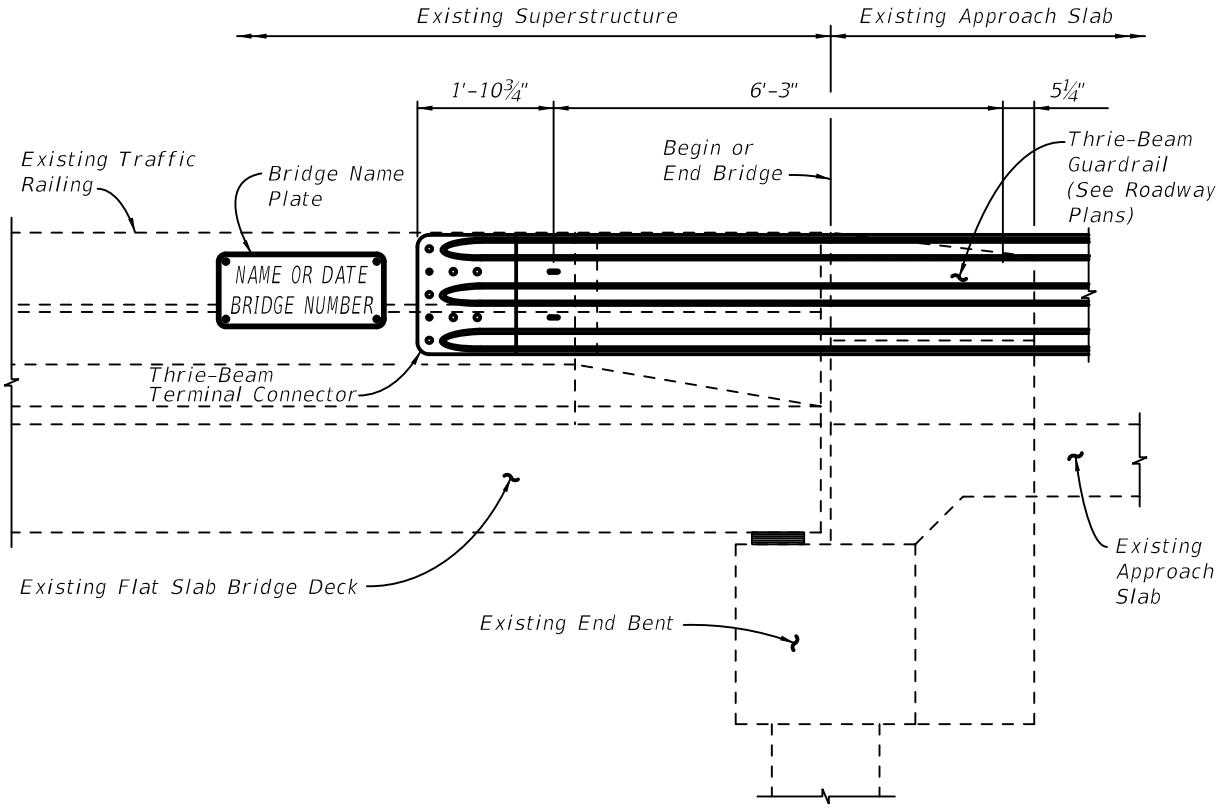

PARTIAL ELEVATION VIEW
(Existing W-Beam Guardrail to be removed not shown for clarity.
"F" Shape Railing shown, "New Jersey" Shape Railing similar)

SCHEME A

Flat Slab Scheme B

The Thrie-Beam Guardrail transition retrofit details shown in Scheme B are applicable for existing bridges meeting both of the following requirements:

1. The existing bridge Traffic Railings are "F" or "New Jersey" shape railings conforming to one of the superseded FDOT standard designs shown in Section 1 of these Instructions (see above).
2. The total amount of thermal movement at the bridge end expansion joint exceeds 1½" (¾" in each direction). The total amount of thermal movement at the expansion joint shall be determined by theoretical calculation and confirmed by field measurement where possible. It should be noted that the actual in-service movement due to thermal effects may be less than the value determined by theoretical calculation.

If both of the above requirements are met, then Scheme B details shown below and the following guidelines shall be used to assist in the preparation of the plans.

If Scheme B is used, then Structures and Roadway Plans will be required for the Thrie-Beam Guardrail retrofit. The Roadway Plans shall address traffic control issues, removal of the existing "W" Beam Guardrail transition connection and installation of the new Guardrail transition connection utilizing ***Design Standards*** Index 400. The Structures Plans shall address demolition and reconstruction of the required portion of the existing Traffic Railing end transition and approach slab.

If the existing traffic railing is an "F" Shape traffic railing, the appropriate ***Design Standards*** Indexes 420 and 421 shall be referenced and used in their entirety or modified as required by project specific designs included in the Structures Plans. Applicable details from ***Design Standards*** Index 20900 or 20910 shall be used as required for the approach slab reconstruction.

If the existing traffic railing is a "New Jersey" Shape traffic railing, project specific railing details will be required. Applicable details from ***Design Standards*** Index 20900 or 20910 shall be used as required for the approach slab reconstruction.

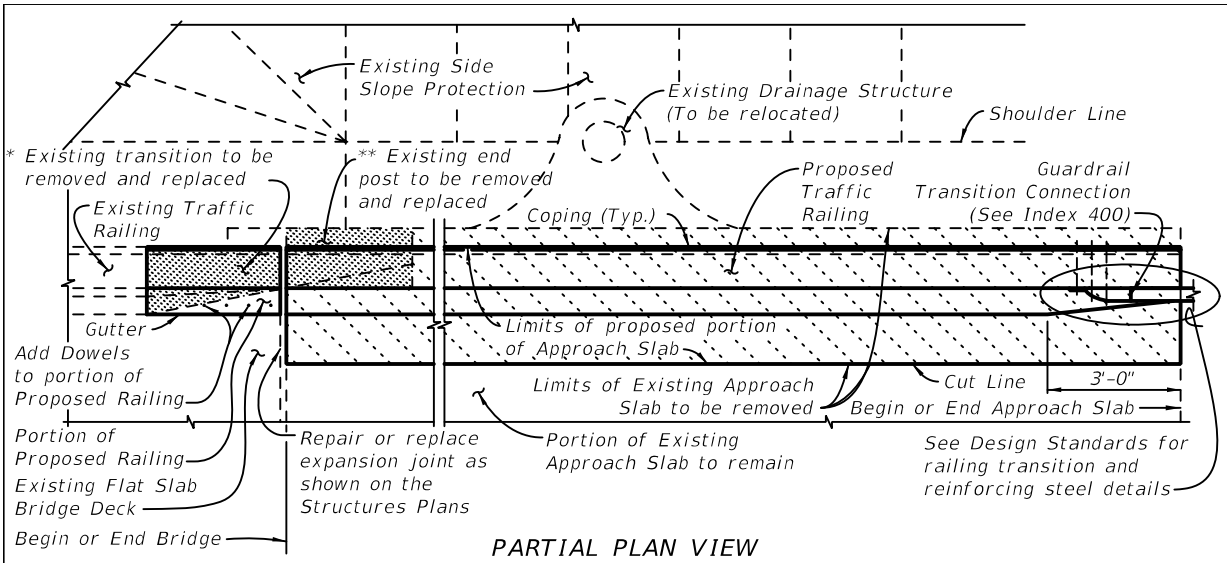

PARTIAL PLAN VIEW
(Existing W-Beam Guardrail to be removed not shown for clarity.
"F" Shape Railing shown, "New Jersey" Shape Railing similar.)

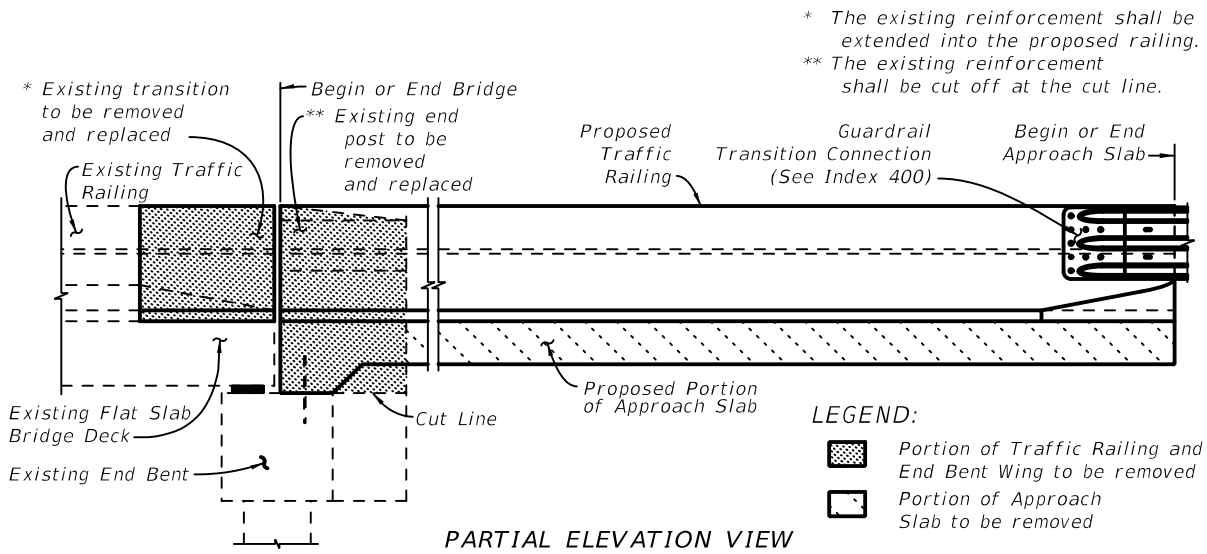

PARTIAL ELEVATION VIEW
(Existing W-Beam Guardrail to be removed not shown for clarity.
"F" Shape Railing shown, "New Jersey" Shape Railing similar.)

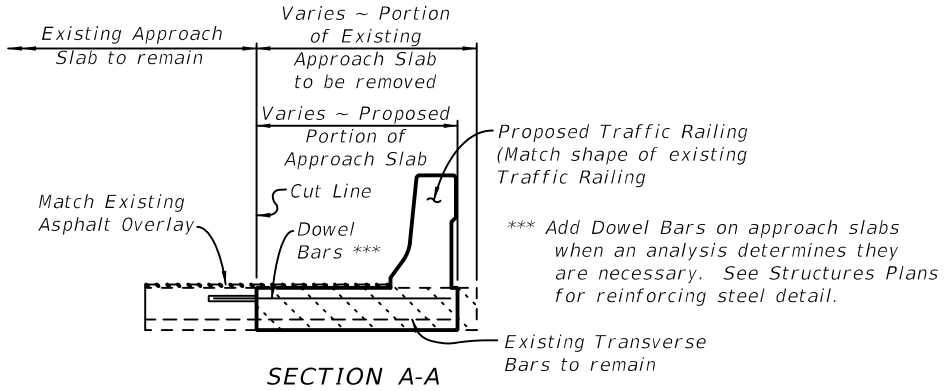

SECTION A-A
(Showing one layer of existing reinforcement)

SCHEME B

3. Guardrail Approach Transition Retrofit Instructions for Existing Beam/Girder Bridges

These instructions are applicable only to bridges with beam or girder superstructures.

The retrofitting of existing "W" beam guardrail transitions is accomplished by installing new Thrie-Beam Guardrail transitions in accordance with Schemes A, B or C as presented herein. It is permissible to use any combination of Schemes A, B and C on a single bridge as required; e.g. Scheme A at begin bridge and Scheme C at end bridge. Schemes A and B shall be considered as the preferred choices for retrofitting the existing guardrail transitions. Scheme C should only be used where Schemes A or B are not applicable. Use of any schemes is dependent on the existing Traffic Railing and End Transition being in sound structural condition, for the portions that will remain in place.

Beam/Girder Scheme A

The Thrie-Beam Guardrail transition retrofit details shown in Scheme A are applicable for existing bridges meeting both of the following requirements:

1. The existing bridge Traffic Railings are "F" or "New Jersey" shape railings conforming to one of the superseded FDOT standard designs shown in Section 1 of these Instructions (see above).
2. The existing end bent wingwalls that support the Traffic Railing end transitions are a minimum of 8'-9" in length and are directly supported by a pile or drilled shaft.

If both of the above requirements cannot be met, then Scheme B shall be evaluated for use. If both of the above requirements are met, the Scheme A details shown below and the following guidelines shall be used to assist in the preparation of the plans.

Generally, if Scheme A is applicable, Structures Plans will not be required for the Thrie-Beam Guardrail transition retrofit. Only Roadway Plans which include a reference to ***Design Standards*** Index 402, Sheet 24 of 24, Scheme II are required.

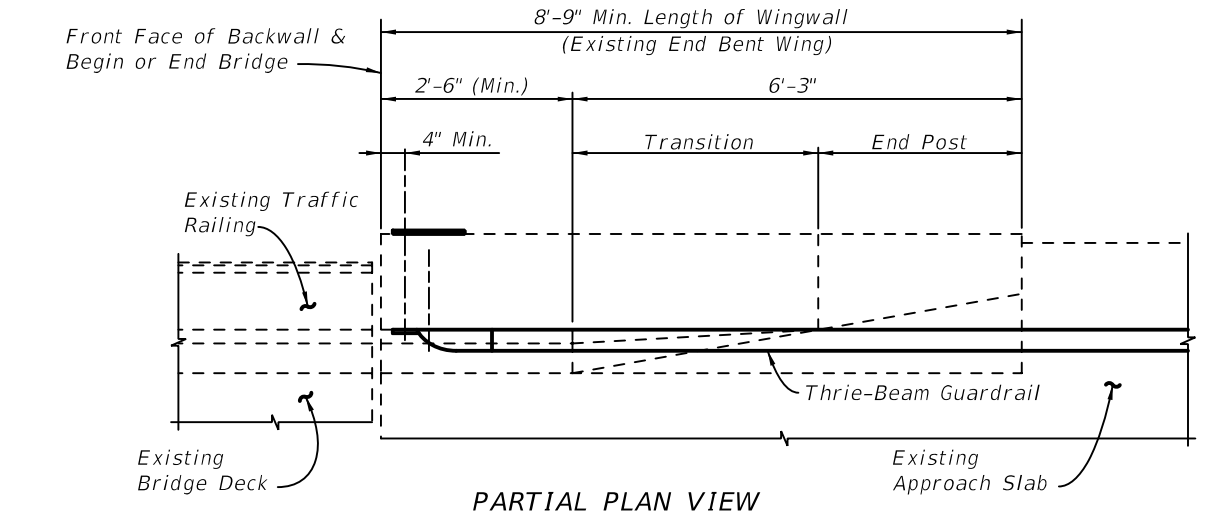

PARTIAL PLAN VIEW
(Existing W-Beam Guardrail to be removed not shown for clarity.
"F" Shape Railing shown, "New Jersey" Shape Railing similar)

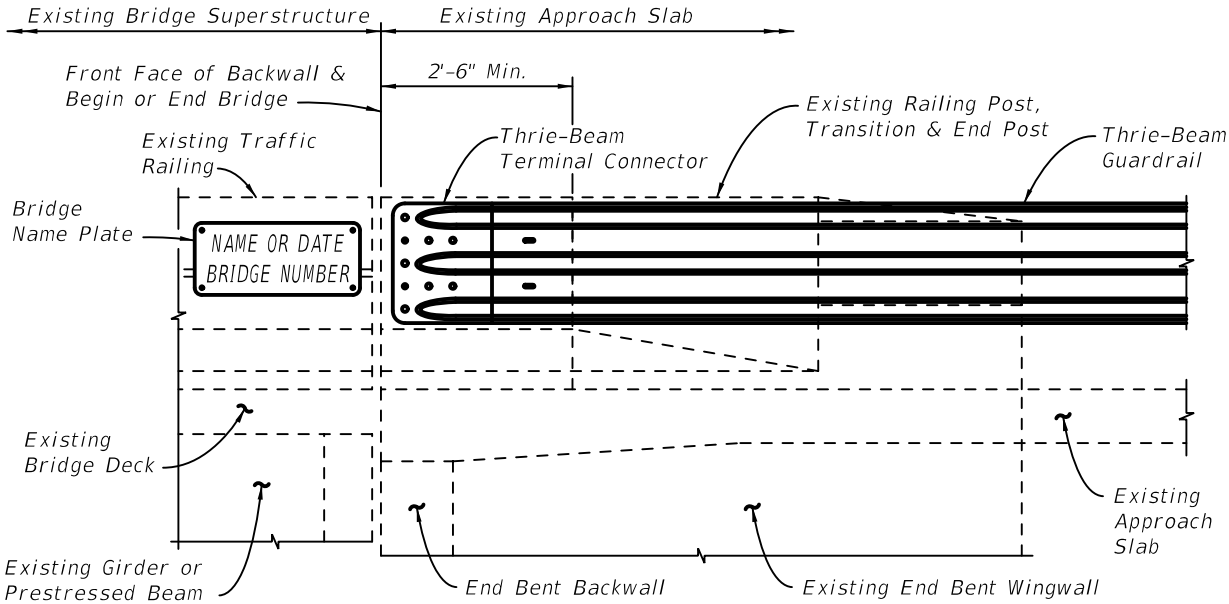

PARTIAL ELEVATION VIEW
(Existing W-Beam Guardrail to be removed not shown for clarity.
"F" Shape Railing shown, "New Jersey" Shape Railing similar)

SCHEME A

Beam/Girder Scheme B

The Thrie-Beam Guardrail transition retrofit details shown in Scheme B are applicable for existing bridges meeting both of the following requirements:

1. The existing bridge Traffic Railings are "F" or "New Jersey" shape railings conforming to one of the superseded FDOT standard designs shown in Section 1 of these Instructions (see above).
2. The total amount of thermal movement at the bridge end expansion joint does not exceed 1½" (¾" in each direction). The total amount of thermal movement at the expansion joint shall be determined by theoretical calculation and confirmed by field measurement where possible. It should be noted that the actual in-service movement due to thermal effects may be less than the value determined by theoretical calculation.

If both of the above requirements cannot be met then Scheme C shall be evaluated for use. If both of the above requirements are met, the Scheme B details shown below and the following guidelines shall be used to assist in the preparation of the plans.

Generally, if Scheme B is determined to be applicable, Structures Plans will not be required for the Thrie-Beam Guardrail retrofit. Only Roadway Plans which include a reference to ***Design Standards*** Index 402, Sheet 24 of 24, Scheme III shall be used for the Thrie-Beam Guardrail retrofit.

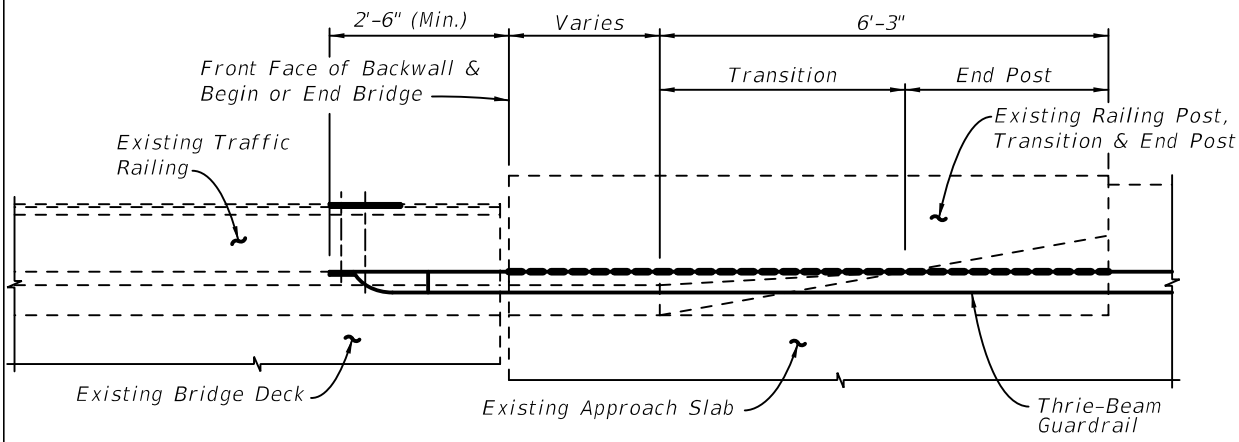

PARTIAL PLAN VIEW
(Existing W-Beam Guardrail to be removed not shown for clarity.
"F" Shape Railing shown, "New Jersey" Shape Railing similar)

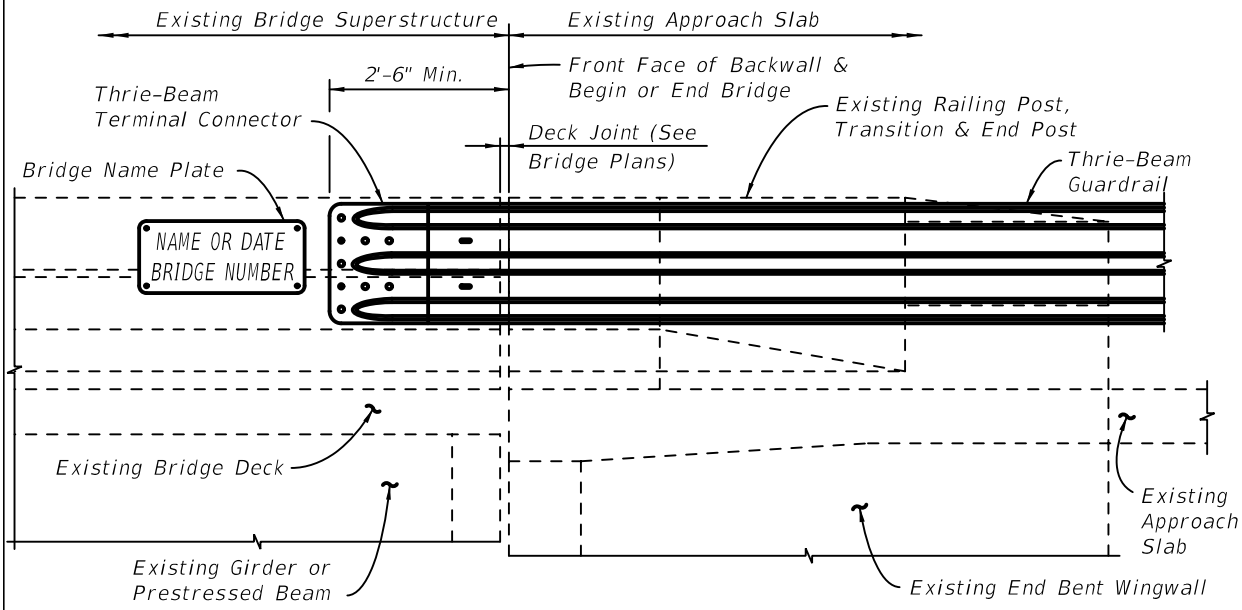

PARTIAL ELEVATION VIEW
(Existing W-Beam Guardrail to be removed not shown for clarity.
"F" Shape Railing shown, "New Jersey" Shape Railing similar)

SCHEME B

Beam/Girder Scheme C

The Thrie-Beam Guardrail transition retrofit details shown in Scheme C are applicable for existing bridges meeting both of the following requirements:

1. The existing bridge Traffic Railings are "F" or "New Jersey" shape railings conforming to one of the superseded FDOT standard designs shown in Section 1 of these Instructions (see above).
2. The total amount of thermal movement at the bridge end expansion joint exceeds 1½" (¾" in each direction). The total amount of thermal movement at the expansion joint shall be determined by theoretical calculation and confirmed by field measurement where possible. It should be noted that the actual in-service movement due to thermal effects may be less than the value determined by theoretical calculation.

If both of the above requirements are met then Scheme C shall be used for the retrofit. In this event, the details shown below and the following guidelines shall be used to assist in the preparation of the plans.

If Scheme C is determined to be applicable, then Structures and Roadway Plans will be required for the Thrie-Beam Guardrail retrofit. The Roadway Plans shall address traffic control issues, removal of the existing "W" Beam Guardrail transition connection and installation of the new Guardrail transition connection utilizing ***Design Standards*** Index 400. The Structures Plans shall address demolition and reconstruction of the required portion of the existing Traffic Railing end transition and approach slab.

If the existing traffic railing is an "F" Shape traffic railing, the appropriate ***Design Standards*** Indexes 420 and 421shall be referenced and used in their entirety or modified as required by project specific designs included in the Structures Plans. Applicable details from ***Design Standards*** Indexes 20900 or 20910 shall be used as required for the approach slab reconstruction.

If the existing traffic railing is a "New Jersey" Shape traffic railing, project specific railing details will be required. Applicable details from ***Design Standards*** Index 20900 or 20910 shall be used as required for the approach slab reconstruction.

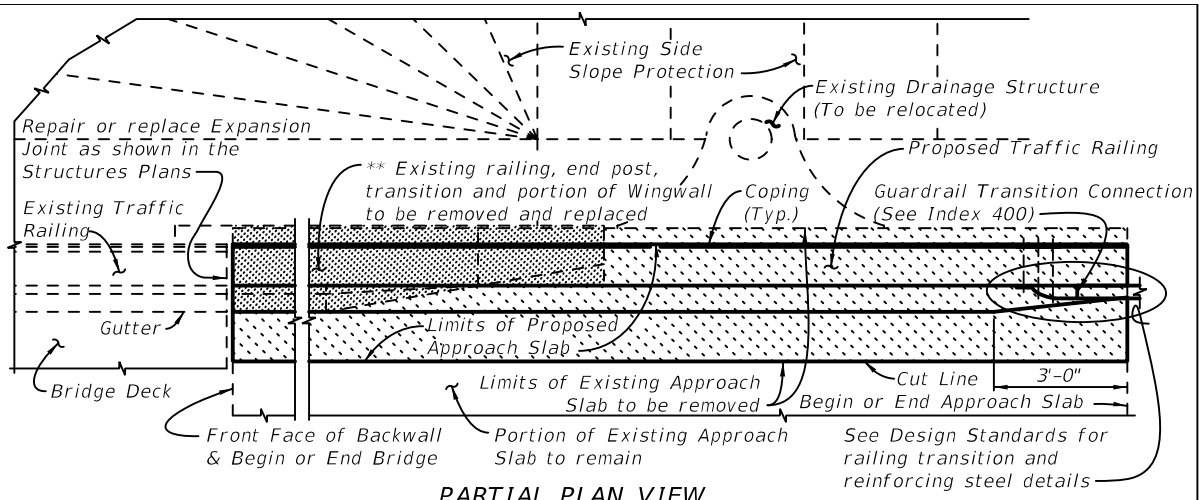

PARTIAL PLAN VIEW
(Existing W-Beam Guardrail to be removed not shown for clarity.
"F" Shape Railing shown, "New Jersey" Shape Railing similar.)

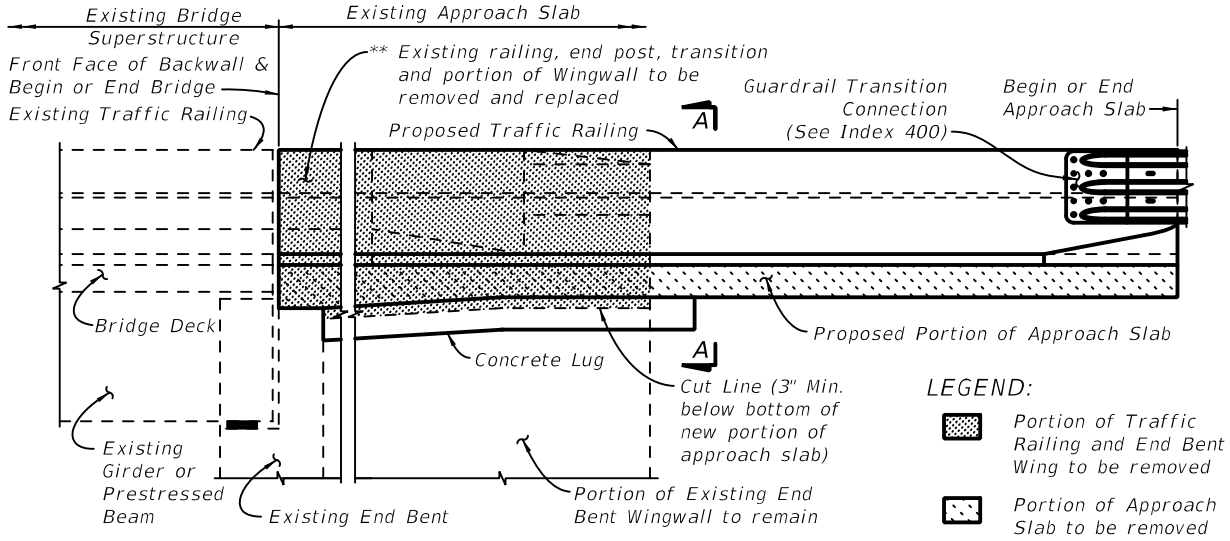

PARTIAL ELEVATION VIEW
(Existing W-Beam Guardrail to be removed not shown for clarity.
"F" Shape Railing shown, "New Jersey" Shape Railing similar.)

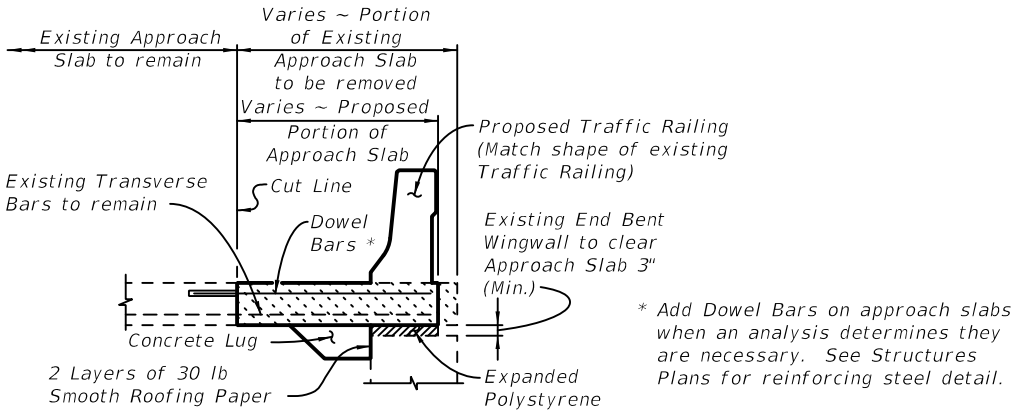

SECTION A-A
(Showing one layer of existing reinforcement)

SCHEME C

Plan Content Requirements

In the Roadway Plans:

Include the following note in the General Notes:

> Paint reinforcing steel that is exposed during drilling/coring of the Terminal Connector bolt holes with a zinc rich galvanizing compound in accordance with Section 562 of the ***Specifications***.

Payment

Item number	Item description	Unit Measure
536-1-1	Guardrail - Roadway	LF
536-1-5	Guardrail - Roadway, Thrie Beam	LF
536-8	Guardrail - Bridge Anchorage Assembly (Furnish & Install)	EA
536-73	Guardrail Removal	LF

Use 536-1-1 when approach guardrail is W-beam guardrail.

Use 536-1-5 when approach guardrail is Thrie beam guardrail.

Use 536-8 with Index 480 retrofits and when attaching guardrail to existing safety shape bridge traffic railings.

Index 404 Guardrail Transitions - Existing Post & Beam Bridge Railings (Narrow & Recessed Curbs)

Design Criteria

NCHRP Report 350; ***Plans Preparation Manual***, Volume 1, Chapter 25

Design Assumptions and Limitations

This index is applicable for retrofitting existing approach and trailing end guardrail treatments that are adjacent to existing structurally continuous Post and Beam Concrete Handrails (traffic railings) as shown on the following and other similar obsolete Indexes:

Index 7936 Handrail for Sidewalk Type B (1963 with 1967 Revisions)

Index 10257-MOD Concrete Handrail (1970 with 1971 and 1973 Revisions)

Index 10266 Concrete Handrail (1969 with 1973, 1974 and 1975 Revisions)

Index 10276 Concrete Handrail and Light Standard Pilaster Details (1969 with 1973 Revisions)

For the purposes of Index 404, the railings shown on these obsolete indexes are identified as having narrow or recessed curbs as follows:

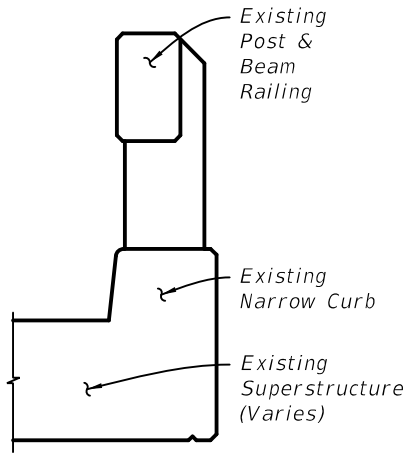

EXISTING NARROW CURB SCHEMATIC
SEE OBSOLETE INDEXES 10257 & 10276

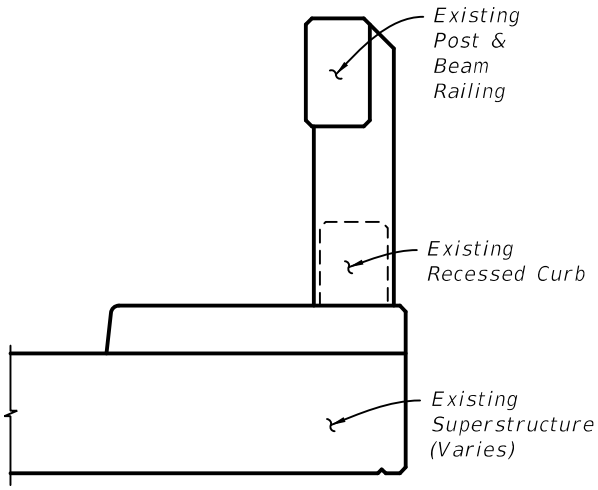

EXISTING RECESSED CURB SCHEMATIC
SEE OBSOLETE INDEXES 7936 & 10266

Neither a new load rating nor an evaluation of the structural adequacy of the existing bridge deck or wingwalls are required to use this index.

Index 404 depicts six different schemes for installing the approach or trailing end guardrail transitions. The applicability of the individual schemes to different curb configurations and approach or trailing ends is described as follows:

Scheme 1 - Applicable for approach ends of existing bridges with beam or girder type superstructures and narrow curb post and beam railings (obsolete Indexes 10257, 10276 or similar). A section of the existing post and beam railing along the wingwall must be removed and replaced with a new vertical face railing to facilitate connection of the new Thrie Beam Guardrail Approach Transition.

Scheme 2 - Applicable for approach ends of existing bridges with flat slab type superstructures and narrow curb post and beam railings (obsolete Indexes 10257, 10276 or similar). Also applicable for approach ends of existing bridges with beam or girder type superstructures, narrow curb post and beam railings and curved wingwalls. A section of the existing post and beam railing at the end of the bridge must be removed and replaced with a new vertical face railing to facilitate connection of the new Thrie Beam Guardrail Approach Transition.

Scheme 3 - Applicable for approach ends of existing bridges with beam or girder type superstructures and recessed curb post and beam railings (obsolete Index 10266 or similar). A section of the existing post and beam railing along the wingwall must be removed and replaced with a new vertical face railing to facilitate connection of the new Thrie Beam Guardrail Approach Transition.

Scheme 4 - Applicable for approach ends of existing bridges with flat slab type superstructures, recessed curb post and beam railings and parallel wingwalls (obsolete Index 10266 or similar). Also applicable for approach ends of existing bridges with beam or girder type superstructures, recessed curb post and beam railings and curved wingwalls (obsolete Index 7936 or similar). A section of the existing post and beam railing at the end of the bridge must be removed and replaced with a new vertical face railing to facilitate connection of the new Thrie Beam Guardrail Approach Transition.

Scheme 5 - Applicable for approach ends of existing bridges with beam, girder or flat slab type superstructures and either narrow or recessed curb post and beam railings that have solid sections (i.e. no openings) of railing along the wingwalls a minimum of 5'-0" long (obsolete Indexes 10257, 10266, 10276 or similar). No new section of concrete railing is necessary, the new Thrie Beam Guardrail Approach Transition is bolted to the end of the existing solid section of railing along the wingwall.

Scheme 6 - Applicable for trailing ends of existing bridges with beam, girder or flat slab type superstructures and either narrow or recessed curb post and beam railings for which no new section of concrete railing is necessary to attach the trailing end guardrail (obsolete Indexes 10257, 10266, 10276 or similar). The new trailing end guardrail is bolted to the end of the existing railing along the wingwall.

The limiting stations of the guardrail transitions must be specified in the plans. Determine the attachment point for the guardrail Terminal Connector based on the retrofit scheme being used.

On approach ends, a Transition Block or Curb is required if the existing Approach Slab does not have a curb. The appropriate treatment on trailing ends shall be determined by the Roadway Engineer. A Transition Block is not required on trailing ends with no opposing traffic, however, a Curb may be required due to drainage needs. An Index 300, Type D Concrete Curb is generally suitable for this application. Show the appropriate site specific approach and trailing end treatments in the Plans.

The Utility Adjustment Plans, if required, shall contain all necessary utility adjustment information required for the construction of the retrofit. Utilities and/or conduits may exist in or adjacent to the existing post and beam railings and will vary in size, number and location. The presence, size, number and locations of existing utilities and/or conduits shall be determined by a review of existing Plans and confirmed by field verification. Utility and/or conduit installations may vary by location on a single bridge. Thus, a field verification shall be conducted for each individual installation of the retrofit. Existing utilities and/or conduits that conflict with the retrofit shall be relocated if possible or placed out of service. The required field verification work should be completed as early in the evaluation phase as possible.

The Traffic Control Plans for the construction of the retrofit shall be prepared in accordance with Index 600 Series. The Plans shall address all aspects of the construction of the retrofit. Generally, the use of this index will require traffic control consisting of temporary shifting, narrowing and/or closing of travel lanes and/or shoulders. Removal of a portion of the existing post and beam railing is required for Schemes 1 through 4. In these cases, the use of crash tested Precast Concrete Temporary Barriers will also be required to protect the drop-off exposed by the removal of the portion of the existing post and beam railing.

This index does not address retrofitting of the existing post and beam railings or sidewalks for pedestrian use. The potential need to retrofit the existing bridge for pedestrian use shall be evaluated on a project by project basis and the necessary Plans developed accordingly. Generally, the potential effects on pedestrian use of the bridge will be confined to bridges with sidewalks. The potential reduction in clear width of the sidewalk caused by the installation of the retrofit shall be considered.

The existing post and beam railing and/or guardrail end transitions may have been previously retrofitted utilizing a scheme presented in ***Roadway and Traffic Design Standards*** Indexes 400 or 401 (2000 and earlier Editions) or other retrofit schemes. In this event, the requirements for removal, modification or replacement of the prior retrofit shall be evaluated and addressed in the Plans as required. Payment for the removal of the prior retrofit, if required, must be evaluated on a case by case basis depending on the type of retrofit that is present.

In the event that the details presented in this index do not closely match the existing conditions, the Structures and/or Roadway Engineer(s) shall prepare a customized project specific retrofit design using this index as a guide. Contact the Structures Design Office and Roadway Design Office for guidance in this event.

Plan Content Requirements

In the Roadway Plans:

The Roadway Plans shall include all of the sheets necessary to define and detail the retrofit of the existing guardrail transitions. Generally, this index can be used without any modifications being made to it. If project specific details are required, use this index as a guide for developing general notes and details to be included in the plans.

Supplement this index as required with project specific details that may be deemed necessary to complete the installation of the retrofit. These details may include locations and details of any existing utilities, conduits, drainage structures, sign structures and luminaire supports and any other needed information not included in this index.

Show the Design Standards Index number, Scheme number, Limiting Station of Guardrail and whether or not a Transition Block is required for each retrofit location on each bridge. An example of a plan note containing the required information as it would appear on a Plan or Plan-Profile sheet is as follows:

> "Construct Guardrail Approach Transition Retrofit, Index 404, Scheme 1 with Transition Block. Limiting Station of Guardrail Transition is XX+XX.XX"

For projects with multiple bridges, a tabular format may be used to convey the necessary information. A separate Plan and Elevation sheet of the type used in Structures Plans is generally not required.

The Utility Adjustment Plans, if required, shall contain all necessary utility adjustment information required for the construction of the retrofit.

The Traffic Control Plans for the construction of the retrofit shall address all aspects of the construction of the retrofit.

Payment

Schemes 1 thru 4 only:

Item number	Item description	Unit Measure
521-5-11	Concrete Traffic Railing - Bridge, Retrofit - Post & Beam Railing	EA
536-8-1 and 536-8-3 or 536-8-6 where appropriate	Guardrail Bridge Anchorage Assembly	EA

Schemes 5 and 6 only:

Item number	Item description	Unit Measure
536-8-1 and 536-8-3 or 536-8-6 where appropriate	Guardrail Bridge Anchorage Assembly	EA

Index 405 Guardrail Transitions - Existing Post & Beam Bridge Railings (Wide Curbs)

Design Criteria

NCHRP Report 350; ***Plans Preparation Manual***, Volume 1, Chapter 25

Design Assumptions and Limitations

This index is applicable for retrofitting existing approach and trailing end guardrail treatments that are adjacent to existing bridge mounted structurally continuous Post and Beam Concrete Handrails (traffic railings) as shown on the following and other similar obsolete Indexes:

Index 3199 Handrail for 20 ft. Span (1954)
Index 3274 Concrete Handrail (1954)
Index 3276 Handrail - 76 ft. Span (1954)
Index 3489 Handrail - 76 ft. Span (1955)
Index 3959 Concrete Handrail (1961)
Index 4058 Concrete Handrail (1957)
Index 4727 Concrete Handrail (1960 with 1962 Revisions)
Index 7678 Concrete Handrail (1963)
Index 8572 Concrete Handrail (1964 with 1967 Revisions)

Index 405 is applicable for use with the obsolete railings listed above that are constructed on curbs as shown below on roadways with a Design Speed of 45 mph or less:

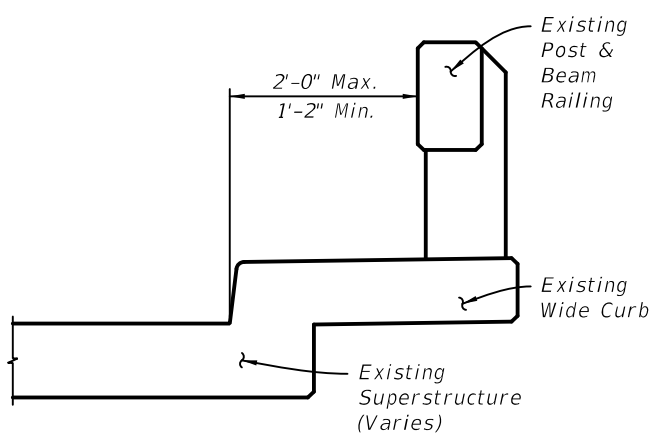

EXISTING WIDE CURB SCHEMATIC
SEE OBSOLETE INDEXES LISTED ABOVE

Neither a new load rating nor an evaluation of the structural adequacy of the existing bridge deck, approach slab or wingwalls are required to use this index.

Index 405 depicts five different retrofit schemes for installing the approach or trailing end guardrail transitions. In each of the retrofit schemes, a section of Vertical Face Retrofit railing is constructed to facilitate connection of the new guardrail transition. The applicability of the individual retrofit schemes to different wingwall configurations is shown in the following views.

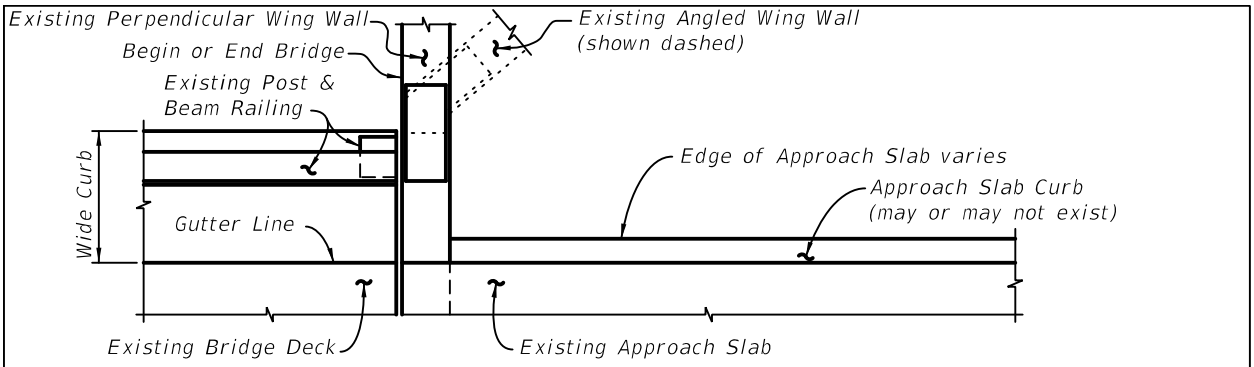

PARTIAL PLAN VIEW OF EXISTING BRIDGE WITH WIDE CURBS AND PERPENDICULAR OR ANGLED WING WALLS - USE SCHEME 1

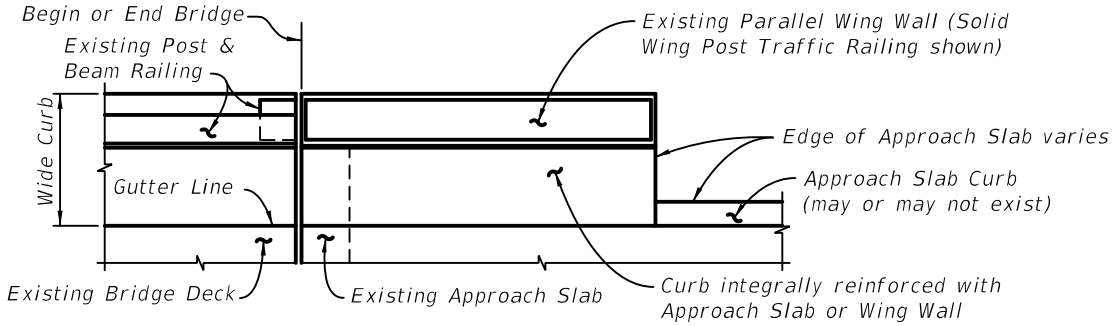

PARTIAL PLAN VIEW OF EXISTING BRIDGE WITH WIDE CURBS, PARALLEL WING WALLS AND INTEGRALLY REINFORCED APPROACH SLAB CURBS - USE SCHEME 2

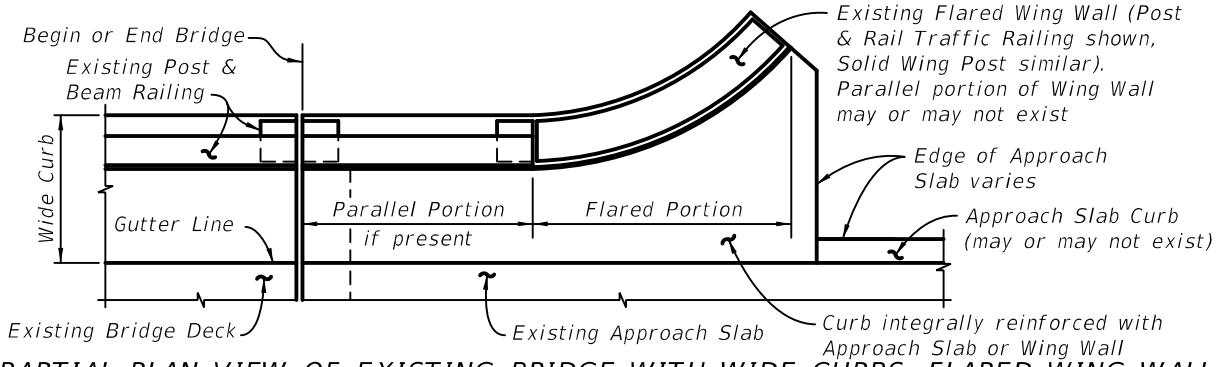

PARTIAL PLAN VIEW OF EXISTING BRIDGE WITH WIDE CURBS, FLARED WING WALLS AND PARALLEL INTEGRALLY REINFORCED APPROACH SLAB CURBS - USE SCHEME 2

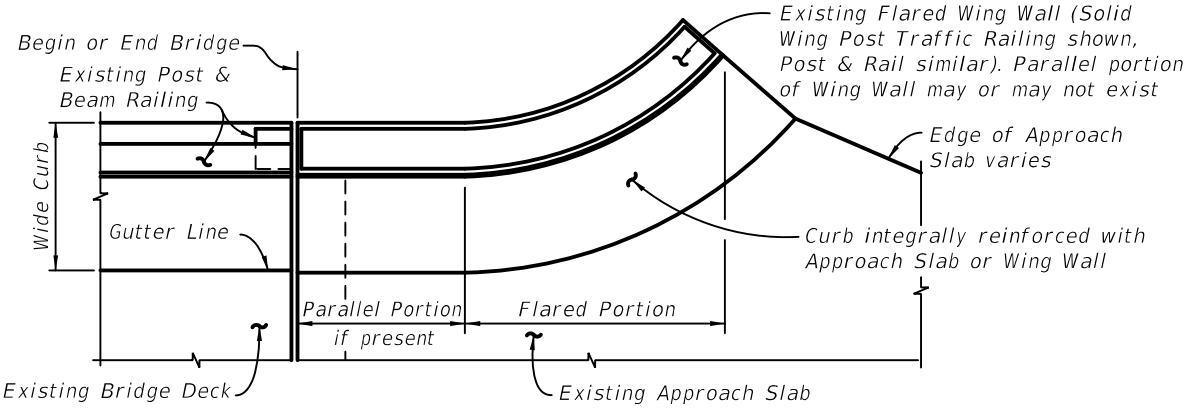

PARTIAL PLAN VIEW OF EXISTING BRIDGE WITH WIDE CURBS, FLARED WING WALLS AND FLARED INTEGRALLY REINFORCED APPROACH SLAB CURBS - USE SCHEME 3

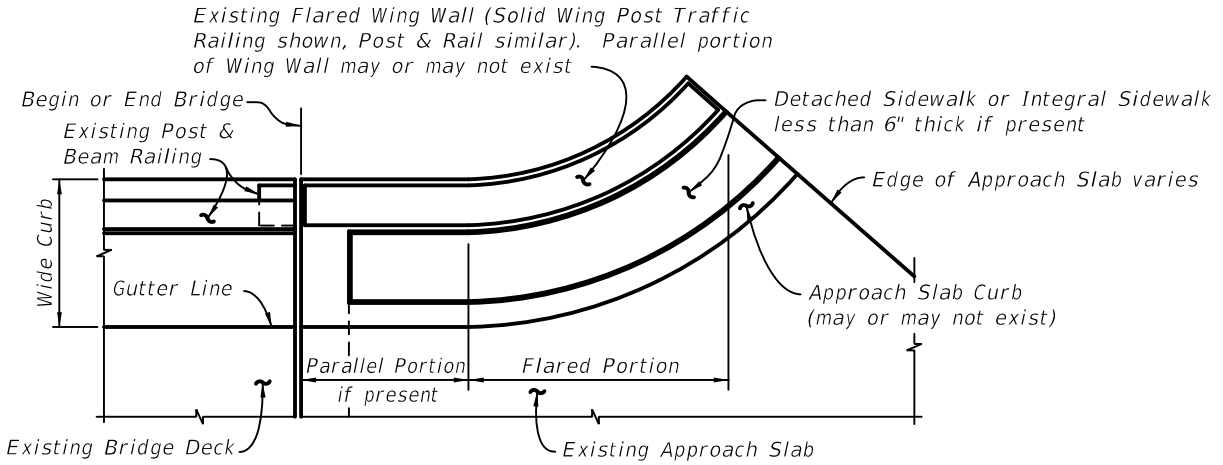

PARTIAL PLAN VIEW OF EXISTING BRIDGE WITH WIDE CURBS, FLARED WING WALLS AND APPROACH SLABS WITH DETACHED SIDEWALKS OR SIDEWALKS LESS THAN 6" THICK - USE SCHEME 4

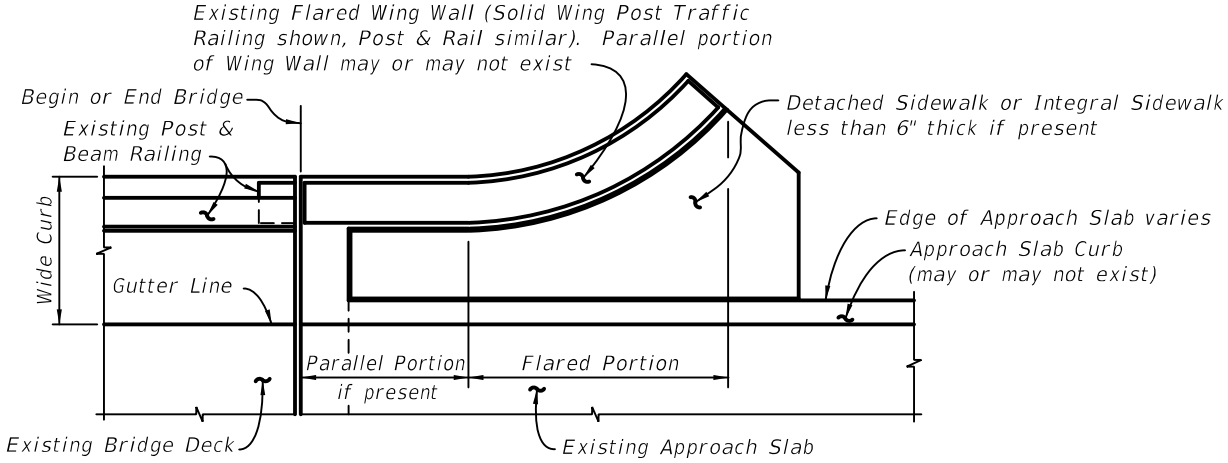

PARTIAL PLAN VIEW OF EXISTING BRIDGE WITH WIDE CURBS, FLARED WING WALLS AND APPROACH SLABS WITH DETACHED SIDEWALKS OR SIDEWALKS LESS THAN 6" THICK - USE SCHEME 5

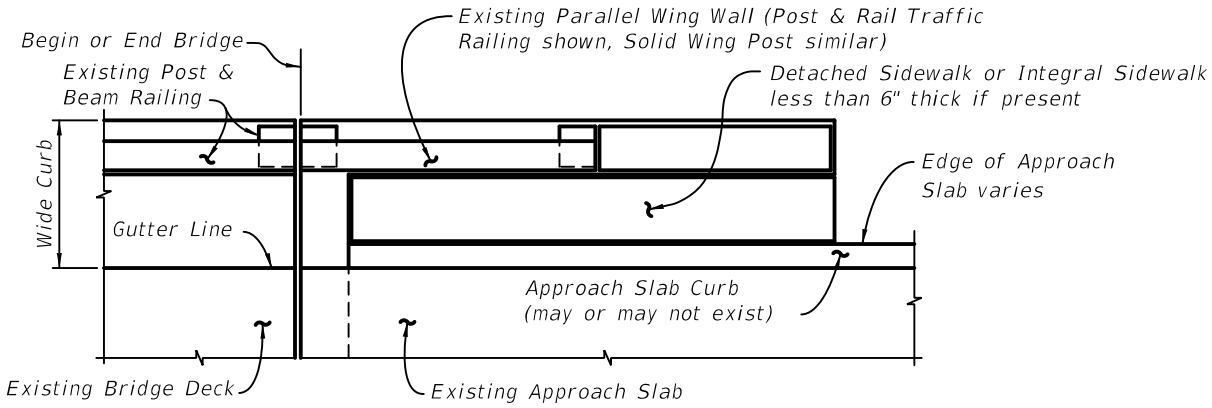

PARTIAL PLAN VIEW OF EXISTING BRIDGE WITH WIDE CURBS, PARALLEL WING WALLS AND APPROACH SLABS WITH DETACHED SIDEWALKS OR SIDEWALKS LESS THAN 6" THICK - USE SCHEME 5

Index 405 is to be used in conjunction with Index 402. The appropriate Index 402 approach guardrail transition retrofit and its limiting station must be selected and specified in the plans based on the shapes and designs of the existing post and beam railing, approach slabs and end bent wingwalls. Determine the attachment point for the Thrie-Beam Terminal Connector based on the shape, length and direct means of support of the end most section of the Vertical Face Retrofit, the existing wingwall and/or approach slab as follows:

Perpendicular or Angled Wingwalls -

Attach the Thrie-Beam Terminal Connector to the Vertical Face Retrofit on the bridge.

Parallel Wingwalls -

1. If the Vertical Face Retrofit is supported by the wingwall, attach the Thrie-Beam Terminal Connector to the Vertical Face Retrofit along the wingwall if the wingwall is a minimum of 5'-0" long and directly pile supported. If the Vertical Face Retrofit is supported by the approach slab, attach the Thrie-Beam Terminal Connector along the approach slab section of the retrofit if that section is a minimum of 5'-0" long.
2. Attach Thrie-Beam Terminal Connector to the Vertical Face Retrofit on the bridge if the any of the appropriate preceding criteria for parallel wingwalls or approach slabs are not met.

Flared Wingwalls with parallel portions -

1. If the Vertical Face Retrofit is supported by the wingwall, attach the Thrie-Beam Terminal Connector to the Vertical Face Retrofit along the parallel portion of the Vertical Face Retrofit if the wingwall is a minimum of 5'-0" long, directly pile supported, and if the parallel portion of Vertical Face Retrofit is a minimum of 2'-0" long. If the Vertical Face Retrofit is supported by the approach slab, attach the Thrie-Beam Terminal Connector along the approach slab section of the retrofit if that section is a minimum of 5'-0" long and has a parallel portion that is a minimum of 2'-0" long.
2. Attach Thrie-Beam Terminal Connector to the Vertical Face Retrofit on the bridge if any of the preceding criteria for flared wingwalls with parallel portions are not met.

Flared Wingwalls without parallel portions -

Attach Thrie-Beam Terminal Connector to the Vertical Face Retrofit on the bridge.

On approach ends, a Transition Block or Curb is required if the existing Approach Slab does not have a curb. The appropriate treatment on trailing ends shall be determined by the Roadway Engineer. A Transition Block is not required on trailing ends with no opposing traffic, however, a Curb may be required due to drainage needs. An Index 300, Type D Concrete Curb is generally suitable for this application. Show the appropriate site specific approach and trailing end treatments in the Plans.

The Utility Adjustment Plans, if required, shall contain all necessary utility adjustment information required for the construction of the retrofit. Utilities and/or conduits may exist in or adjacent to the existing post and beam railings and will vary in size, number and location. The presence, size, number and locations of existing utilities and/or conduits shall be determined by a review of existing Plans and confirmed by field verification. Utility and/or conduit installations may vary by location on a single bridge. Thus, a field verification shall be conducted for each individual installation of the retrofit. Existing utilities and/or conduits that conflict with the retrofit shall be relocated if possible or placed out of service. The required field verification work should be completed as early in the evaluation phase as possible.

The Traffic Control Plans for the construction of the retrofit shall be prepared in accordance with Index 600 Series. The Plans shall address all aspects of the construction of the retrofit. Generally, the use of this index will require traffic control consisting of temporary shifting, narrowing and/or closing of travel lanes and/or shoulders.

This index does not address retrofitting of the existing post and beam railings or sidewalks for pedestrian use. The potential need to retrofit the existing bridge for pedestrian use shall be evaluated on a project by project basis and the necessary Plans developed accordingly. Generally, the potential effects on pedestrian use of the bridge will be confined to bridges with sidewalks. The potential reduction in clear width of the sidewalk caused by the installation of the retrofit shall be considered.

The existing post and beam railing and/or guardrail end transitions may have been previously retrofitted utilizing a scheme presented in Roadway and Traffic Design Standards Indexes 400 or 401 (2000 and earlier Editions) or other retrofit schemes. In this event, the requirements for removal, modification or replacement of the prior retrofit shall be evaluated and addressed in the Plans as required. Payment for the removal of the prior retrofit, if required, must be evaluated on a case by case basis depending on the type of retrofit that is present.

In the event that the details presented in this index do not closely match the existing conditions, the Structures and/or Roadway Engineer(s) shall prepare a customized project specific retrofit design using this index as a guide. Contact the Structures Design Office and Roadway Design Office for guidance in this event.

Plan Content Requirements

In the Roadway Plans:

The Roadway Plans shall include all of the sheets necessary to define and detail the retrofit of the existing guardrail transitions. Generally, this index can be used without any modifications being made to it. If project specific details are required, use this index as a guide for developing general notes and details to be included in the plans. Examples of such details may include locations and details of any existing utilities, conduits, drainage structures, sign structures, luminaire supports, details for new traffic railing sliding plate assemblies for large expansion joints and any other needed information not included in this index.

Show the Design Standards Index number, Scheme number, Limiting Station of Guardrail and whether or not a Transition Block is required for each retrofit location on each bridge. An example of a plan note containing the required information as it would appear on a Plan or Plan-Profile sheet is as follows:

> "Construct Guardrail Approach Transition Retrofit, Index 405, Scheme 1 with Transition Block. Limiting Station of Guardrail Transition is XX+XX.XX"

For projects with multiple bridges, a tabular format may be used to convey the necessary information. A separate Plan and Elevation sheet of the type used in Structures Plans is generally not required.

The Utility Adjustment Plans, if required, shall contain all necessary utility adjustment information required for the construction of the retrofit.

The Traffic Control Plans for the construction of the retrofit shall address all aspects of the construction of the retrofit.

Payment

Item number	Item description	Unit Measure
521-5-11	Concrete Traffic Railing - Bridge, Retrofit - Post & Beam Railing	EA
536-8-1 and 536-8-3 or 536-8-6 where appropriate	Guardrail Bridge Anchorage Assembly	EA

Index 411 Pier Protection Barrier

Design Criteria

AASHTO LRFD Bridge Design Specifications, 6th Edition; ***Structures Design Guidelines (SDG)***

Design Assumptions and Limitations

Use the Pier Protection Barrier to shield bridge piers that theoretically do not have sufficient strength to resist the ***LRFD*** equivalent static impact force and for other specialized applications. If the minimum set back requirements of this standard cannot be met, see ***SDG*** Chapter 2 for options.

If the bridge pier can withstand the ***LRFD*** equivalent static impact force, Index 400 or Index 410 would be applicable.

Although intended for shielding bridge piers, the Pier Protection Barrier can be used on a project specific basis to shield other critical roadside objects when deemed necessary or appropriate.

As used in this standard, setback distance is as defined by ***LRFD***. See ***PPM*** Volume 1, Chapter 4 for minimum clear zone width and lateral offset requirements.

Establish the offset from the Pier Protection Barrier to the bridge pier, column or pile bent based on project constraints.

Determine the required Pier Protection Barrier height, i.e. 42" or 54", in accordance with the requirements of ***LRFD*** and the ***SDG***.

Determine the appropriate limiting stations of the Pier Protection Barrier and its end treatment(s) using the Pier Protection Barrier Length of Advancement diagrams provided on the standard.

Select Pier Protection Barrier terminal treatment for design speeds greater than or equal to 50 mph from the following options:

a. Terminated outside of the clear zone of any approach traffic;

b. Terminated within a shielded location;

c. Terminal protection by the use of a crash cushion system; or,

d. Terminated in conjunction with a suitably designed transition to another barrier.

Determine the appropriate footing configuration(s) (T, Front Cantilever or Back Cantilever) for a continuous run of Pier Protection Barrier using the Pier Protection Barrier Footing Layout Schematics. Select the footing configuration(s) based on traffic control needs and locations of piers, pier footings, utilities, drainage structures, etc. as shown. Footing configurations along a continuous run of Pier Protection Barrier may be intermixed as shown on the standard.

If the existing adjacent pier footing is too shallow to provide the 6 inch minimum clearance between footings as shown, reduce the riser dimension between the barrier and the barrier footing and prepare project specific details to supplement the standard. The Pier Protection Barrier itself should not be modified, only its footing and riser should be modified adjacent to the pier footing so as to provide adequate clearance. A project specific shallow footing must provide comparable overturning and sliding resistance to the standard footing.

In absence of continuous concrete barrier, determine guardrail requirements in accordance with Indexes 400 and 410.

Plan Content Requirements

In the Structures or Roadway Plans:

Designate the Pier Protection Barrier height, footing configuration(s) and limiting stations on the Plan-Profile, Plan and Elevation and or Pier sheets, e.g.:

Begin 42" Pier Protection Barrier with Front Cantilever Footing, Sta. 100+00.00

Indicate Crash Wall locations (when required) and lengths on the Plan-Profile sheets. Designate Crash Wall height to match height of adjacent Pier Protection Barrier.

Show Cross Sections as required to locate Pier Protection Barrier, Crash Wall (when required) and footings adjacent to bridge piers, columns or footings, drainage structures, utilities, etc.

Prepare Traffic Control Plans to accommodate Pier Protection Barrier, Crash Wall (when required) and footing construction.

Prepare project specific footing and riser details as required.

Payment

Item number	Item description	Unit Measure
521-72-10	Shoulder Concrete Barrier Wall, Rigid Shoulder 42"	LF
521-72-11	Shoulder Concrete Barrier Wall, Rigid Shoulder 54"	LF

Index 414 Type K Temporary Concrete Barrier System

Design Criteria

NCHRP Report 350 Test Level 3 Criteria; ***AASHTO LRFD Bridge Design Specifications***, 6th Edition, Section 13; ***Structures Design Guidelines (SDG)***

Design Assumptions and Limitations

The Type K Temporary Concrete Barrier System has been crash tested to ***NCHRP Report 350*** Test Level 3 criteria or structurally evaluated to meet the requirements of ***NCHRP Report 350*** Test Level 3 criteria for the installation configurations as shown on the Design Standard utilizing the types, sizes, lengths, shapes, strengths and grades of the fabrication and installation materials as shown.

Type K Barriers are required for temporary installations on bridges for traffic separation, shielding drop-offs and shielding work zones without drop-offs. Type K Barriers are required for temporary installations on retaining walls for shielding drop-offs. Type K Barriers can be used on roadways for traffic separation and for shielding work zones, above ground hazards and drop-offs.

Plan Content Requirements

Designate location(s) where Type K's are to be used along with installation requirements, e.g. freestanding, bolted or staked down, or backfilled.

In order to maintain crashworthiness of the system, do not specify different grades, sizes, shapes or types of reinforcing steel for those shown for constructing Type K Barriers. Also, do not specify different type, size, length or material grade anchor bolts, nuts, washers, adhesives, connector pins, stakes, keeper pins, or guardrail components for installing Type K Barriers. Use only in the configurations shown on the ***Design Standard***.

In the Structures Plans:

Show and label Type K Barriers on the Construction Sequence drawings and other sheets as required. Show offsets to drop-offs, above ground hazards and adjacent lanes as appropriate. Include cross references to ***Design Standards*** Index 414.

In the Roadway Plans:

Show and label Type K Barriers on the Traffic Control Plans and other sheets as required. Show offsets to drop-offs, above ground hazards and adjacent lanes as appropriate. Include cross references to ***Design Standards*** Index 414.

Payment

Item number	Item description	Unit Measure
102-71-14	Barrier Wall, Temporary, F&I, Type K	LF
102-71-24	Barrier Wall, Temporary, Relocate, Type K	LF
102-79	Lights, Barrier Wall Mount, Temp, Type C, Steady Burn	ED

Index 420 Traffic Railing (32" F Shape)

Design Criteria

NCHRP Report 350 Test Level 4 Criteria; ***AASHTO LRFD Bridge Design Specifications***; ***Structures Design Guidelines (SDG)***

Design Assumptions and Limitations

The 32" F-Shape Traffic Railing is the basic default traffic railing for use on FDOT bridges and retaining walls. Use this railing in accordance with the requirements of ***SDG*** 6.7.

The details as shown for installing for 2" diameter conduits and associated Embedded Junction Boxes (EJBs) in traffic railings have been determined to be crashworthy in accordance with the requirements of ***NCHRP Report 350, AASHTO Manual for Assessing Safety Hardware (MASH)*** and the ***AASHTO LRFD Bridge Design Specifications***. To preserve the crashworthiness of traffic railings, no more than two 2" diameter conduits and associated EJBs, as shown on ***Design Standards*** Index 21210, may be installed within a traffic railing or traffic railing/noise wall.

Reinforcing cover for Traffic Railings is shown as 3", which accommodates slip forming tolerances. For modified designs 2" minimum cover is usually adequate for stationary form construction.

Design bridge decks supporting 32" F-Shape Traffic Railings in accordance with the requirements of ***SDG*** 4.2. For bridge decks up to a maximum thickness of 9", the two Bars 5S placed in the bridge deck may substitute for the longitudinal deck steel located within the limits of Bars 5V, provided that the total area of longitudinal deck steel beneath the railing, as required by calculation, is not reduced.

Design Standards Indexes 20900, 20910 and 6100 Series contain details for the use of 32" F-Shape Traffic Railings on retaining walls and approach slabs.

Plan Content Requirements

In the Structures Plans:

In the Materials Note on the General Notes Sheet, specify the concrete class in accordance with the superstructure environment classification. See ***SDG*** 1.4.

Include the following Bridge Name Note on the General Notes Sheet:

> Place the following bridge name on the traffic railing in accordance with the Traffic Railing Design Standard:
>
> [Use the name of the bridge or non-roadway facility crossed, or include the name of both facilities for roadway crossings, e.g.:
>
> > THOMASVILLE ROAD FLYOVER
> > TOMOKA RIVER
> > CSX RAILROAD
> > US 19 OVER EAST BAY DR

For multiple bridges, identify the associated bridge number, e.g.:

Bridge No.	Name
600103	CHOCTAWHATCHEE BAY
600104	CHOCTAWHATCHEE BAY RELIEF]

Show and label, by name or Index number, the 32" F-Shape Traffic Railing on the Plan and Elevation, Typical Section, Superstructure, Approach Slab and Finish Grade Elevations Cross Section sheets, Retaining Wall Control Drawings, and other sheets as required. Show limiting stations when transitioning to other type traffic railings. Include cross references to ***Design Standards*** Index 20900 or 20910 as appropriate.

On the Superstructure section sheets, show the two Bars 5S placed in the bridge deck within the Bars 5V along with the rest of the deck steel.

In the Roadway Plans when the 32" F-Shape Traffic Railing is used on retaining walls:

In the Materials Note on the General Notes Sheet, specify the concrete class in accordance with the retaining wall environment classification. See ***SDG*** 1.4.

Show and label, by name or Index number, the 32" F-Shape Traffic Railing on the Retaining Wall Control Drawings, and other sheets as required. Show limiting stations when transitioning to other type traffic railings. Include cross references to ***Design Standards*** Index 6100 Series as appropriate.

All concrete and Bars 5P, 5S and 5V required to construct the traffic railing are included in the Estimated Traffic Railing Quantities. Do not include traffic railing concrete in the estimated concrete quantities, or Bars 5P, 5S and 5V in the reinforcing bar lists and estimated reinforcing steel quantities for supporting bridge decks, approach slabs or retaining walls.

Payment

Item number	Item description	Unit Measure
521-5-1	Concrete Traffic Railing, Bridge 32" F - Shape	LF
521-8-1	Concrete Traffic Railing Barrier, Retaining Wall System, Mounted with Sleeper Slab	LF

Index 421 Traffic Railing (Median 32" F Shape)

Design Criteria

NCHRP Report 350 Test Level 4 Criteria; ***AASHTO LRFD Bridge Design Specifications***; ***Structures Design Guidelines (SDG)***

Design Assumptions and Limitations

The 32" F-Shape Median Traffic Railing is the basic default median traffic railing for use on FDOT bridges. Use this railing in accordance with the requirements of ***SDG*** 6.7.

The details as shown for installing for 2" diameter conduits and associated Embedded Junction Boxes (EJBs) in traffic railings have been determined to be crashworthy in accordance with the requirements of ***NCHRP Report 350, AASHTO Manual for Assessing Safety Hardware (MASH***) and the ***AASHTO LRFD Bridge Design Specifications***. To preserve the crashworthiness of traffic railings, no more than two 2" diameter conduits and associated EJBs, as shown on ***Design Standards*** Index 21210, may be installed within a traffic railing or traffic railing/noise wall.

Reinforcing cover for Traffic Railings is shown as 3", which accommodates slip forming tolerances. For modified designs 2" minimum cover is usually adequate for stationary form construction.

Design bridge decks supporting 32" F-Shape Median Traffic Railings in accordance with the requirements of ***SDG*** 4.2. For bridge decks up to a maximum thickness of 9", the three Bars 5S placed in the bridge deck may substitute for the longitudinal deck steel located within the limits of Bars 5W, provided that the total area of longitudinal deck steel beneath the railing, as required by calculation, is not reduced.

Plan Content Requirements

In the Structures Plans:

In the Materials Note on the General Notes Sheet, specify the concrete class in accordance with the superstructure environment classification. See ***SDG*** 1.4.

Show and label, by name or Index number, the 32" F-Shape Median Traffic Railing on the Plan and Elevation, Typical Section, Superstructure, Approach Slab and Finish Grade Elevations Cross Section sheets, and other sheets as required.

On the Superstructure section sheets, show the three Bars 5S placed in the bridge deck within the Bars 5W along with the rest of the deck steel.

All concrete and Bars 5R, 5S and 5W required to construct the traffic railing are included in the Estimated Traffic Railing Quantities. Do not include traffic railing concrete in the estimated concrete quantities, or Bars 5R, 5S and 5W in the reinforcing bar lists and estimated reinforcing steel quantities for supporting bridge decks or approach slabs.

Payment

Item number	Item description	Unit Measure
521-5-3	Concrete Traffic Railing, Bridge, 32" F-Shape, Median, Double Face	LF

Index 422 Traffic Railing (42" Vertical Shape)

Design Criteria

NCHRP Report 350 Test Level 4 Criteria; ***AASHTO LRFD Bridge Design Specifications***; ***Structures Design Guidelines (SDG)***

Design Assumptions and Limitations

The 42" Vertical Shape Traffic Railing is intended for use on bridges and retaining walls with raised sidewalks. Use this railing in accordance with the requirements of ***SDG*** 6.7.

The details as shown for installing for 2" diameter conduits and associated Embedded Junction Boxes (EJBs) in traffic railings have been determined to be crashworthy in accordance with the requirements of ***NCHRP Report 350, AASHTO Manual for Assessing Safety Hardware (MASH)*** and the ***AASHTO LRFD Bridge Design Specifications***. To preserve the crashworthiness of traffic railings, no more than two 2" diameter conduits and associated EJBs, as shown on ***Design Standards*** Index 21210, may be installed within a traffic railing or traffic railing/noise wall.

Reinforcing cover for Traffic Railings is shown as 3", which accommodates slip forming tolerances. For modified designs 2" minimum cover is usually adequate for stationary form construction.

Design bridge decks supporting 42" Vertical Shape Traffic Railings in accordance with the requirements of ***SDG*** 4.2. For bridge decks up to a maximum thickness of 9", the two Bars 5S placed in the bridge deck may substitute for the longitudinal deck steel located within the limits of Bars 5T, provided that the total area of longitudinal deck steel beneath the railing, as required by calculation, is not reduced.

Design Standards Indexes 20900, 20910 and 6100 Series contain details for the use of 42" Vertical Shape Traffic Railings on retaining walls and approach slabs.

For treatment of 42" Vertical Shape Traffic Railings on skewed bridges see Index 420.

Plan Content Requirements

In the Structures Plans:

In the Materials Note on the General Notes Sheet, specify the concrete class in accordance with the superstructure environment classification. See ***SDG*** 1.4.

Include the following Bridge Name Note on the General Notes Sheet:

> Place the following bridge name on the traffic railing in accordance with the Traffic Railing Design Standard:
>
> [Use the name of the bridge or non-roadway facility crossed, or include the name of both facilities for roadway crossings, e.g.:
>
> THOMASVILLE ROAD FLYOVER
> TOMOKA RIVER
> CSX RAILROAD
> US 19 OVER EAST BAY DR

For multiple bridges, identify the associated bridge number, e.g.:

Bridge No.	Name
600103	CHOCTAWHATCHEE BAY
600104	CHOCTAWHATCHEE BAY RELIEF]

Show and label, by name or Index number, the 42" Vertical Shape Traffic Railing on the Plan and Elevation, Typical Section, Superstructure, Approach Slab and Finish Grade Elevations Cross Section sheets, and other sheets as required.

On the Superstructure section sheets, show the two Bars 5S placed in the bridge deck within the Bars 5T along with the rest of the deck steel.

In the Roadway Plans when the 42" Vertical Shape Traffic Railing is used on retaining walls:

In the Materials Note on the General Notes Sheet, specify the concrete class in accordance with the retaining wall environment classification. See ***SDG*** 1.4.

Show and label, by name or Index number, the 42" Vertical Shape Traffic Railing on the Retaining Wall Control Drawings, and other sheets as required. Include cross references to ***Design Standards*** Index 6100 Series as appropriate.

All concrete and Bars 5S, 5T and 5X required to construct the traffic railing are included in the Estimated Traffic Railing Quantities. Do not include traffic railing concrete in the estimated concrete quantities, or Bars 5S, 5T and 5X in the reinforcing bar lists and estimated reinforcing steel quantities for supporting bridge decks, approach slabs or retaining walls.

Payment

Item number	Item description	Unit Measure
521-5-5	Concrete Traffic Railing, Bridge, 42" Vertical Face	LF

Index 423 Traffic Railing (32" Vertical Shape)

Design Criteria

NCHRP Report 350 Test Level 4 Criteria; ***AASHTO LRFD Bridge Design Specifications***; ***Structures Design Guidelines (SDG)***

Design Assumptions and Limitations

The 32" Vertical Shape Traffic Railing is intended for use on bridges and retaining walls with raised sidewalks. Use this railing in accordance with the requirements of ***SDG*** 6.7.

The details as shown for installing for 2" diameter conduits and associated Embedded Junction Boxes (EJBs) in traffic railings have been determined to be crashworthy in accordance with the requirements of ***NCHRP Report 350, AASHTO Manual for Assessing Safety Hardware (MASH)*** and the ***AASHTO LRFD Bridge Design Specifications***. To preserve the crashworthiness of traffic railings, no more than two 2" diameter conduits and associated EJBs, as shown on ***Design Standards*** Index 21210, may be installed within a traffic railing or traffic railing/noise wall.

Reinforcing cover for Traffic Railings is shown as 3", which accommodates slip forming tolerances. For modified designs 2" minimum cover is usually adequate for stationary form construction.

Design bridge decks supporting 32" Vertical Shape Traffic Railings in accordance with the requirements of ***SDG*** 4.2. For bridge decks up to a maximum thickness of 9", the two Bars 5S placed in the bridge deck may substitute for the longitudinal deck steel located within the limits of Bars 5T, provided that the total area of longitudinal deck steel beneath the railing, as required by calculation, is not reduced.

Design Standards Indexes 20900, 20910 and 6100 Series contain details for the use of 32" Vertical Shape Traffic Railings on retaining walls and approach slabs.

For treatment of 32" Vertical Shape Traffic Railings on skewed bridges see Index 420.

The standard height railing is the Pedestrian / Bicycle Railing (42” height). The Special Height Bicycle Railing (54” height) should only be used where warranted by ***LRFD*** [C13.9.2].

Plan Content Requirements

In the Structures Plans:

In the Materials Note on the General Notes Sheet, specify the concrete class in accordance with the superstructure environment classification. See ***SDG*** 1.4.

Include the following Bridge Name Note on the General Notes Sheet:

Place the following bridge name on the traffic railing in accordance with the Traffic Railing Design Standard:

[Use the name of the bridge or non-roadway facility crossed, or include the name of both facilities for roadway crossings, e.g.:

THOMASVILLE ROAD FLYOVER
TOMOKA RIVER
CSX RAILROAD
US 19 OVER EAST BAY DR

For multiple bridges, identify the associated bridge number, e.g.:

Bridge No.	Name
600103	CHOCTAWHATCHEE BAY
600104	CHOCTAWHATCHEE BAY RELIEF]

Show and label, by name or Index number, the 32" Vertical Shape Traffic Railing on the Plan and Elevation, Typical Section, Superstructure, Approach Slab and Finish Grade Elevations Cross Section sheets, and other sheets as required.

ON the Superstructure section sheets, show the two Bars 5S placed in the bridge deck within the Bars 5T along with the rest of the deck steel.

In the Roadway Plans when the 32" Vertical Shape Traffic Railing is used on retaining walls:

In the Materials Note on the General Notes Sheet, specify the concrete class in accordance with the retaining wall environment classification. See ***SDG*** 1.4.

Show and label, by name or Index number, the 32" Vertical Shape Traffic Railing on the Retaining Wall Control Drawings, and other sheets as required. Include cross references to ***Design Standards*** Index 6100 Series as appropriate.

All concrete and Bars 5S, 5T and 5X required to construct the traffic railing are included in the Estimated Traffic Railing Quantities. Do not include traffic railing concrete in the estimated concrete quantities, or Bars 5S, 5T and 5X in the reinforcing bar lists and estimated reinforcing steel quantities for supporting bridge decks, approach slabs or retaining walls.

Payment

Item number	Item description	Unit Measure
521-5-4	Concrete Traffic Railing, Bridge, 32" Vertical Face	LF

Index 424 Traffic Railing (Corral Shape)

Design Criteria

NCHRP Report 350 Test Level 4 Criteria; ***AASHTO LRFD Bridge Design Specifications***; ***Structures Design Guidelines (SDG)***

Design Assumptions and Limitations

The Corral Shape Traffic Railing is intended for use on bridges and retaining walls when an open traffic railing is desired. When constructed between the traveled way and sidewalks, the Corral Shape Traffic Railing can be used selectively with and without curbs to allow for and control deck drainage between the traveled way and adjacent sidewalks. Note that the "aesthetic openness" of the railing is effectively lost when it is used in an inboard application such as this. Use this railing in accordance with the requirements of ***SDG*** 6.7.

To preserve the crashworthiness of the Corral Shape Traffic Railings, inclusion of conduit and Embedded Junction Boxes (EJBs) into the standard, as designed, is not allowed. If conduit and EJBs are required inside the Corral Shape Traffic Railing, structural details at the EJB locations are required. Contact the Structures Design Office for additional guidance.

Design bridge decks supporting Corral Shape Traffic Railings in accordance with the requirements of ***SDG*** 4.2. For bridge decks up to a maximum thickness of 9", the two Bars 5R2 placed in the bridge deck may substitute for the longitudinal deck steel located within the limits of Bars 5T, provided that the total area of longitudinal deck steel beneath the railing, as required by calculation, is not reduced.

Design Standards Indexes 20900, 20910 and 6100 Series contain details for the use of Corral Shape Traffic Railings on retaining walls and approach slabs.

Indicate use of Curb beneath railing on low side of deck without sidewalks and other locations where required to contain bridge deck runoff. Define Curb location in Structures Plans Superstructure Sheets by Stationing limits or other appropriate methods.

Plan Content Requirements

In the Structures Plans:

Define lengths of End Posts in Structures Plans Superstructure Sheets.

In the Materials Note on the General Notes Sheet, specify the concrete class in accordance with the superstructure environment classification. See ***SDG*** 1.4.

Include the following Bridge Name Note on the General Notes Sheet:

> Place the following bridge name on the traffic railing in accordance with the Traffic Railing Design Standard:

[Use the name of the bridge or non-roadway facility crossed, or include the name of both facilities for roadway crossings, e.g.:

THOMASVILLE ROAD FLYOVER
TOMOKA RIVER
CSX RAILROAD
US 19 OVER EAST BAY DR

For multiple bridges, identify the associated bridge number, e.g.:

Bridge No.	Name
600103	CHOCTAWHATCHEE BAY
600104	CHOCTAWHATCHEE BAY RELIEF]

Show and label, by name or Index number, the Corral Shape Traffic Railing on the Plan and Elevation, Typical Section, Superstructure, Approach Slab and Finish Grade Elevations Cross Section sheets, and other sheets as required.

On the Superstructure section sheets, show the two Bars 5R2 placed in the bridge deck within the limits of Bars P along with the rest of the deck steel.

In the Roadway Plans when the Corral Shape Traffic Railing is used on retaining walls:

In the Materials Note on the General Notes Sheet, specify the concrete class in accordance with the retaining wall environment classification. See ***SDG*** 1.4.

Show and label, by name or Index number, the Corral Shape Traffic Railing on the Retaining Wall Control Drawings, and other sheets as required. Include cross references to ***Design Standards*** Index 6100 Series as appropriate.

All concrete and Bars P, R, S, T, U and V required to construct the traffic railing are included in the Estimated Traffic Railing Quantities. Do not include traffic railing concrete in the estimated concrete quantities, or Bars P, R, S, T, U and V in the reinforcing bar lists and estimated reinforcing steel quantities for supporting bridge decks, approach slabs or retaining walls.

Payment

Item number	Item description	Unit Measure
521-5-6	Concrete Traffic Railing, Bridge, Corral W/Curb	LF
521-5-7	Concrete Traffic Railing, Bridge, Corral Without Curb	LF

Index 425 Traffic Railing (42" F Shape)

Design Criteria

NCHRP Report 350 Test Level 5 Criteria; ***AASHTO LRFD Bridge Design Specifications***; ***Structures Design Guidelines (SDG)***

Design Assumptions and Limitations

The 42" F-Shape Traffic Railing should be used where a railing with Test Level 5 crashworthiness is warranted. Use this railing in accordance with the requirements of ***SDG*** 6.7.

The details as shown for installing for 2" diameter conduits and associated Embedded Junction Boxes (EJBs) in traffic railings have been determined to be crashworthy in accordance with the requirements of ***NCHRP Report 350, AASHTO Manual for Assessing Safety Hardware (MASH)*** and the ***AASHTO LRFD Bridge Design Specifications***. To preserve the crashworthiness of traffic railings, no more than two 2" diameter conduits and associated EJBs, as shown on ***Design Standards*** Index 21210, may be installed within a traffic railing or traffic railing/noise wall.

Reinforcing cover for Traffic Railings is shown as 3", which accommodates slip forming tolerances. For modified designs 2" minimum cover is usually adequate for stationary form construction.

Design bridge decks supporting 42" F-Shape Traffic Railings in accordance with the requirements of ***SDG*** 4.2. For bridge decks up to a maximum thickness of 11", the two Bars 5S2 placed in the bridge deck may substitute for the longitudinal deck steel located within the limits of Bars 5V, provided that the total area of longitudinal deck steel beneath the railing, as required by calculation, is not reduced.

Design Standards Indexes 20900, 20910 and 6100 Series contain details for the use of 42" F-Shape Traffic Railings on retaining walls and approach slabs.

The “Slab Depth” specified in SDG 4.2.4 for use with a 42” F-shape Traffic Railing is only required within the same deck span as the Traffic Railing itself.

For treatment of 42" F-Shape Traffic Railings on skewed bridges see Index 420.

Plan Content Requirements

In the Structures Plans:

In the Materials Note on the General Notes Sheet, specify the concrete class in accordance with the superstructure environment classification. See ***SDG*** 1.4.

Include the following Bridge Name Note on the General Notes Sheet:

Place the following bridge name on the traffic railing in accordance with the Traffic Railing Design Standard:

Use the name of the bridge or non-roadway facility crossed, or include the name of both facilities for roadway crossings, e.g.:

THOMASVILLE ROAD FLYOVER
TOMOKA RIVER
CSX RAILROAD
US 19 OVER EAST BAY DR

For multiple bridges, identify the associated bridge number, e.g.:

Bridge No.	Name
600103	CHOCTAWHATCHEE BAY
600104	CHOCTAWHATCHEE BAY RELIEF

Show and label, by name or Index number, the 42" F-Shape Traffic Railing on the Plan and Elevation, Typical Section, Superstructure, Approach Slab and Finish Grade Elevations Cross Section sheets, Retaining Wall Control Drawings, and other sheets as required. Show limiting stations when transitioning to other types of traffic railings. Include cross references to ***Design Standards*** Index 20900 or 20910 as appropriate.

On the Superstructure section sheets, show the two Bars 5S2 placed in the bridge deck within the Bars 5V along with the rest of the deck steel.

In the Roadway Plans when the 42" F-Shape Traffic Railing is used on retaining walls:

In the Materials Note on the General Notes Sheet, specify the concrete class in accordance with the retaining wall environment classification. See ***SDG*** 1.4.

Show and label, by name or Index number, the 42" F-Shape Traffic Railing on the Retaining Wall Control Drawings, and other sheets as required. Show limiting stations when transitioning to other types of traffic railings. Include cross references to ***Design Standards*** Index 6100 Series as appropriate.

All concrete and Bars 5P, 5S, 8S, 8T and 5V required to construct the traffic railing are included in the Estimated Traffic Railing Quantities. Do not include traffic railing concrete in the estimated concrete quantities, or Bars 5P, 5S, 8S, 8T and 5V in the reinforcing bar lists and estimated reinforcing steel quantities for supporting bridge decks, approach slabs or retaining walls.

Payment

Item number	Item description	Unit Measure
521-5-2	Concrete Traffic Railing, Bridge 42" F-Shape	LF

Index 426 Traffic Railing (Median 36" Single-Slope) (Rev. 11/16)

Design Criteria

MASH Test Level 4 Criteria; ***AASHTO LRFD Bridge Design Specifications***; ***Structures Design Guidelines (SDG)***

Design Assumptions and Limitations

The 36" Single-Slope Median Traffic Railing is the new basic default median traffic railing for use on FDOT bridges. Use this railing in accordance with the requirements of ***SDG*** 6.7.

The details as shown for installing for 2" diameter conduits and associated Embedded Junction Boxes (EJBs) in traffic railings have been determined to be crashworthy in accordance with the requirements of ***AASHTO Manual for Assessing Safety Hardware (MASH***) and the ***AASHTO LRFD Bridge Design Specifications***. To preserve the crashworthiness of traffic railings, no more than two 2" diameter conduits and associated EJBs, as shown on ***Design Standards*** Index 21210, may be installed within a traffic railing or traffic railing/noise wall.

Reinforcing cover for Traffic Railings is shown as 2½", which accommodates new slip forming tolerances. For modified designs 2" minimum cover is usually adequate for stationary form construction.

Design bridge decks supporting 36" Single-Slope Median Traffic Railings in accordance with the requirements of ***SDG*** 4.2. For bridge decks up to a maximum thickness of 9", the three Bars 5S placed in the bridge deck may substitute for the longitudinal deck steel located within the limits of Bars 5W, provided that the total area of longitudinal deck steel beneath the railing, as required by calculation, is not reduced.

Plan Content Requirements

In the Structures Plans:

In the Materials Note on the General Notes Sheet, specify the concrete class in accordance with the superstructure environment classification. See ***SDG*** 1.4.

Show and label, by name or Index number, the 36" Single-Slope Median Traffic Railing on the Plan and Elevation, Typical Section, Superstructure, Approach Slab and Finish Grade Elevations Cross Section sheets, and other sheets as required.

On the Superstructure section sheets, show the three Bars 5S placed in the bridge deck within the Bars 5W along with the rest of the deck steel.

All concrete and Bars 5R, 5S and 5W required to construct the traffic railing are included in the Estimated Traffic Railing Quantities. Do not include traffic railing concrete in the estimated concrete quantities, or Bars 5R, 5S and 5W in the reinforcing bar lists and estimated reinforcing steel quantities for supporting bridge decks or approach slabs.

When approach or trailing end traffic railing or barrier wall is shown in the plans, provide special end transition details to match the adjacent profile and height at the end of the Approach Slab. Transitions should be made over a 10'-0" length for the face profile and at 1:8 maximum slope for the height transition.

Payment

Item number	Item description	Unit Measure
521-5-12	Concrete Traffic Railing, Bridge, 36" Single-Slope, Median, Double Face	LF

Index 427 Traffic Railing (36" Single-Slope) (Rev. 11/16)

Design Criteria

MASH Test Level 4 Criteria; ***AASHTO LRFD Bridge Design Specifications***; ***Structures Design Guidelines (SDG)***

Design Assumptions and Limitations

The 36" Single-Slope Traffic Railing is the new basic default traffic railing for use on FDOT bridges and retaining walls. Use this railing in accordance with the requirements of ***SDG*** 6.7.

The details as shown for installing for 2" diameter conduits and associated Embedded Junction Boxes (EJBs) in traffic railings have been determined to be crashworthy in accordance with the requirements of ***AASHTO Manual for Assessing Safety Hardware (MASH)*** and the ***AASHTO LRFD Bridge Design Specifications***. To preserve the crashworthiness of traffic railings, no more than two 2" diameter conduits and associated EJBs, as shown on ***Design Standards*** Index 21210, may be installed within a traffic railing or traffic railing/noise wall.

Reinforcing cover for Traffic Railings is shown as 2½", which accommodates new slip forming tolerances. For modified designs 2" minimum cover is usually adequate for stationary form construction.

Design bridge decks supporting 36" Single-Slope Traffic Railings in accordance with the requirements of ***SDG*** 4.2. For bridge decks up to a maximum thickness of 9", the two Bars 4S placed in the bridge deck may substitute for the longitudinal deck steel located within the limits of Bars 4V, provided that the total area of longitudinal deck steel beneath the railing, as required by calculation, is not reduced.

Plan Content Requirements

In the Structures Plans:

In the Materials Note on the General Notes Sheet, specify the concrete class in accordance with the superstructure environment classification. See ***SDG*** 1.4.

Include the following Bridge Name Note on the General Notes Sheet:

> Place the following bridge name on the traffic railing in accordance with the Traffic Railing Design Standard:
>
> [Use the name of the bridge or non-roadway facility crossed, or include the name of both facilities for roadway crossings, e.g.:
>
> > THOMASVILLE ROAD FLYOVER
> > TOMOKA RIVER
> > CSX RAILROAD
> > US 19 OVER EAST BAY DR

For multiple bridges, identify the associated bridge number, e.g.:

Bridge No.	Name
600103	CHOCTAWHATCHEE BAY
600104	CHOCTAWHATCHEE BAY RELIEF]

Show and label, by name or Index number, the 36" Single-Slope Traffic Railing on the Plan and Elevation, Typical Section, Superstructure, Approach Slab and Finish Grade Elevations Cross Section sheets, Retaining Wall Control Drawings, and other sheets as required. Show limiting stations when transitioning to other type traffic railings.

On the Superstructure section sheets, show the two Bars 4S placed in the bridge deck within the Bars 4V along with the rest of the deck steel.

When approach or trailing end traffic railing or barrier wall is shown in the plans, provide special end transition details to match the adjacent profile and height at the end of the Approach Slab. Transitions should be made over a 10'-0" length for the face profile and at 1:8 maximum slope for the height transition. To avoid widening the approach slab behind the transition, 2" concrete cover may be used.

All concrete and Bars 4P, 4S and 4V required to construct the traffic railing are included in the Estimated Traffic Railing Quantities. Do not include traffic railing concrete in the estimated concrete quantities, or Bars 4P, 4S and 4V in the reinforcing bar lists and estimated reinforcing steel quantities for supporting bridge decks, approach slabs or retaining walls.

Payment

Item number	Item description	Unit Measure
521-5-13	Concrete Traffic Railing, Bridge 36" Single-Slope	LF
521-8-1	Concrete Traffic Railing Barrier, Retaining Wall System, Mounted with Sleeper Slab	LF

Index 428 Traffic Railing (42" Single-Slope) (Rev. 11/16)

Design Criteria

MASH Test Level 5 Criteria; ***AASHTO LRFD Bridge Design Specifications***; ***Structures Design Guidelines (SDG)***

Design Assumptions and Limitations

The 42" Single-Slope Traffic Railing should be used where a railing with Test Level 5 crashworthiness is warranted. Use this railing in accordance with the requirements of ***SDG*** 6.7.

The details as shown for installing for 2" diameter conduits and associated Embedded Junction Boxes (EJBs) in traffic railings have been determined to be crashworthy in accordance with the requirements of ***AASHTO Manual for Assessing Safety Hardware (MASH)*** and the ***AASHTO LRFD Bridge Design Specifications***. To preserve the crashworthiness of traffic railings, no more than two 2" diameter conduits and associated EJBs, as shown on ***Design Standards*** Index 21210, may be installed within a traffic railing or traffic railing/noise wall.

Reinforcing cover for Traffic Railings is shown as 2½", which accommodates new slip forming tolerances. For modified designs 2" minimum cover is usually adequate for stationary form construction.

Design bridge decks supporting 42" Single-Slope Traffic Railings in accordance with the requirements of ***SDG*** 4.2. For bridge decks up to a maximum thickness of 11", the two Bars 5S2 placed in the bridge deck may substitute for the longitudinal deck steel located within the limits of Bars 5V, provided that the total area of longitudinal deck steel beneath the railing, as required by calculation, is not reduced.

The “Slab Depth” specified in ***SDG*** 4.2.4 for use with a 42” Single-Slope Traffic Railing is only required within the same deck span as the Traffic Railing itself.

For treatment of 42" Single-Slope Traffic Railings on skewed bridges see ***Design Standards*** Index 427.

Plan Content Requirements

In the Structures Plans:

In the Materials Note on the General Notes Sheet, specify the concrete class in accordance with the superstructure environment classification. See ***SDG*** 1.4.

Include the following Bridge Name Note on the General Notes Sheet:

> Place the following bridge name on the traffic railing in accordance with the Traffic Railing Design Standard:
>
> Use the name of the bridge or non-roadway facility crossed, or include the name of both facilities for roadway crossings, e.g.:

THOMASVILLE ROAD FLYOVER
TOMOKA RIVER
CSX RAILROAD
US 19 OVER EAST BAY DR

For multiple bridges, identify the associated bridge number, e.g.:

Bridge No.	Name
600103	CHOCTAWHATCHEE BAY
600104	CHOCTAWHATCHEE BAY RELIEF

Show and label, by name or Index number, the 42" Single-Slope Traffic Railing on the Plan and Elevation, Typical Section, Superstructure, Approach Slab and Finish Grade Elevations Cross Section sheets, Retaining Wall Control Drawings, and other sheets as required. Show limiting stations when transitioning to other types of traffic railings.

On the Superstructure section sheets, show the two Bars 5S2 placed in the bridge deck within the Bars 5V along with the rest of the deck steel.

When approach or trailing end traffic railing or barrier wall is shown in the plans, provide special end transition details to match the adjacent profile and height at the end of the Approach Slab. Transitions should be made over a 10'-0" length for the face profile and at 1:8 maximum slope for the height transition. To avoid widening the approach slab behind the transition, 2" concrete cover may be used.

All concrete and Bars 5P, 5S, 6S, 6T and 5V required to construct the traffic railing are included in the Estimated Traffic Railing Quantities. Do not include traffic railing concrete in the estimated concrete quantities, or Bars 5P, 5S, 6S, 6T and 5V in the reinforcing bar lists and estimated reinforcing steel quantities for supporting bridge decks, approach slabs or retaining walls.

Payment

Item number	Item description	Unit Measure
521-5-14	Concrete Traffic Railing, Bridge 42" Single-Slope	LF

Index 430 Crash Cushion Details

Design Criteria

AASHTO Roadside Design Guide 4th Edition 2011; ***Plans Preparation Manual (PPM)*** Volume 1, Chapter 4, Roadside Safety; ***National Cooperative Highway Research Program (NCHRP) Report 350***; ***AASHTO Manual for Assessing Safety Hardware***, ***MASH 2009***

Design Assumptions and Limitations

See ***PPM***, Volume 1 (Chapter 4), notes on ***Design Standards*** Index 430, and limiting conditions as shown on the Approved Products List (APL) webpage and the approved crash cushion drawings posted on the APL.

Index 430 is applicable for permanent crash cushion installations which shield the ends of Concrete Barrier Walls and Guardrail, only.

Standard crash cushion design is based on shielding the ends of either concrete barrier wall or guardrail. The design length of a crash cushion is established by a given design speed and the shortest crash cushion option available for that design speed. The design length of the crash cushion is included within the limits of the Length of Need (see ***Design Standards*** Index 400 for Length of Need requirements).

The design length for concrete barrier wall is measured from the Beginning of Length of Need to the end of the crash cushion concrete foundation. The design length for guardrail is measured from the Beginning of Length of Need to the downstream end of the manufacturer's transition, which is at the center of Post 1 for the Standard Guardrail Transition. All Crash Cushions are located by the station of their downstream ends.

Establish the location station for crash cushions and barrier ends based on the design length of the shortest crash cushion for a given design speed.

All permanent crash cushion concrete foundations must fit within Length Restrictions and space constraints as shown in the plans. Quantify and summarize the location of all crash cushions using the Plan Summary Boxes provided in the ***Basis of Estimates (BOE)***, Chapter 8.

Note:

For limited access roadway off-ramps, design all crash cushions at these locations based on the design speed of the mainline facility.

For additional design information on the selection and location of temporary crash cushions in work zones, see ***PPM***, Volume 1, Chapter 4.

Plan Content Requirements

See ***BOE***, Chapter 8, Summary of Permanent Crash Cushions.

Summarize Permanent Crash Cushions in the plans according to the:

1. Location (Station and Side),
2. Barrier System (either Concrete Barrier Wall or Guardrail),
3. Design Length (selected from the applications charts),
4. Design Speed (based on facility type and designation),
5. Crash Test Level (see ***NCHRP Report 350*** or AASHTO's ***MASH*** 2009),
6. Hazard Width (see PPM, Volume 2, Exhibit SQ-4), and
7. Length Restriction (based on site specific space constraints).

Payment

The cost of providing the foundation and any incidental items incurred in furnishing and installing crash cushions shall be included in the pay item for providing the crash cushion.

Item number	Item description	Unit Measure
544-75-1	Crash Cushion, Optional	EA

See the ***BOE*** and the ***Specifications***, Section 544 for additional information on payment, pay item use and compensation.

Index 470 Series Traffic Railing - (Thrie Beam Retrofit) (Rev. 11/16)

Design Criteria

NCHRP Report 350, Test Level 4; ***AASHTO LRFD Bridge Design Specifications***, 6th Edition, Section 13; ***Structures Design Guidelines (SDG)***

Design Assumptions and Limitations

Index 470 is the lead standard for the Traffic Railing (Thrie-Beam Retrofit) standard series which includes Indexes 470 through 476. Use this standard with Indexes 402, 471, 472, 473, 474, 475 and 476.

The Traffic Railing (Thrie-Beam Retrofit) Indexes 470 through 476, are applicable for retrofitting specific types of existing bridge mounted traffic railings (a.k.a. concrete handrails) that are not based on crash tested designs. Indexes 470 through 476 are not acceptable as alternatives for new construction.

These Standards are to be used in conjunction with Index 402. The appropriate Index 402 approach transition retrofit for Index 470 Series bridge railing retrofits must be selected and specified in the plans based on the shapes and designs of the existing bridge traffic railings, approach slabs and end bent wing walls. See the Instructions for Index 402 and ***SDG*** 6.7 for more information.

The applicability of the Thrie-Beam Retrofit to a particular bridge shall be determined based on a review of the Load Rating of the existing bridge, a comparison of the existing bridge geometry to that shown for the Thrie-Beam Retrofit and an evaluation of the structural adequacy of the existing bridge deck and wing walls in accordance with the requirements of the ***SDG***. See ***SDG*** 2.2 for average weight per linear foot of the retrofit.

The Traffic Railing (Thrie-Beam Retrofit) is based on a design that has been successfully crash tested in accordance with ***NCHRP Report 350*** Test Level 4 criteria. The Standards all utilize 10 Gauge Thrie-Beam Guardrail that is installed adjacent to the face of the existing curb and in front of, or in place of, all or part of the existing traffic railing. The Standards work with existing traffic railings that incorporate either solid concrete parapet type or concrete post and beam type railings with or without top mounted metal railings. These existing traffic railings are typically mounted on top of concrete curbs of varying widths and heights. The individual Standards address both narrow and wide curbs (a.k.a. "safety curbs"), and skewed and non-skewed bridges with parallel, perpendicular, angled or flared end bent wing walls. Each Standard includes several schemes that address the given wing wall configurations. Examples depicting existing curb and end bent wing wall configurations are shown in the Existing Curb Schematics and the Partial Plan Views of Existing Bridges herein.

Generally, the Roadway Plans shall include all of the sheets necessary to define and detail the retrofit of the existing traffic railings. Index 470, Traffic Railing (Thrie-Beam Retrofit) General Notes and Details shall be referenced in the Roadway Plans, or a

similar project specific drawing depicting general notes and details, shall be included in the Roadway Plans. In addition, one or more of the appropriate Indexes 471 through 476, that most closely matches the configuration of the existing traffic railing and curb is to be referenced in the Roadway Plans for each bridge as required. Generally, these Standards can be used without any modifications being made to them. More than one of the Indexes 471 through 476 may be required for a single bridge due to the curbs or sidewalks on the two sides of the bridge possibly having different widths. A separate Plan and Elevation sheet of the type used in Structures Plans is generally not required.

The heights of the exposed portions of the existing bridge curbs may vary and shall be determined by field measurement. These Standards are applicable for bridges with exposed curb heights from 5" to 1'-0". If resurfacing of the bridge deck is proposed, then the Roadway Engineer shall ensure sufficient milling depth is shown in the Plans in order to maintain the 5" minimum exposed curb height. The appropriate post designation of "A", "B" or "C" shall be determined and shown in the Plans for each bridge based on the criteria given in the Post Dimension Table on ***Design Standards*** Index 470. The selection of the appropriate post shall consider any proposed milling and resurfacing work.

The need to remove all or part of the existing traffic railing down to the top of the curb in order to provide room for the construction of the retrofit is addressed in the individual Standards. Payment for the removal of all or part of the existing traffic railing shall be included in Removal of Existing Structures, Pay Item 110-3. As part of the overall retrofit concept for a bridge, the existing traffic railing may be removed, even though it is not specifically required to be, in order to reduce the dead load carried by the bridge. In these cases, the potential drop off hazard for pedestrians that will be created behind the retrofit shall be addressed in the Plans.

Where scuppers exist on bridge decks, project specific notes or details may be required to maintain scupper openings and avoid anchor bolt conflicts.

The treatment of the approach end of the retrofit shall consist of Index 402 or another appropriate site specific treatment. The appropriate treatment of the trailing end of the retrofit shall be determined by the Roadway Engineer. As a minimum, if no other hazards are present, an Index 400, W-Thrie Beam Transition Section and an End Anchorage Assembly Type II shall be provided on the trailing end of the retrofit. On approach ends, a Transition Block or Curb is required if the existing Approach Slab does not have a curb. A Transition Block is not required on trailing ends with no opposing traffic; however, a Curb may be required due to drainage needs. An Index 300, Type D Concrete Curb is generally suitable for this application. The appropriate site specific approach and trailing end treatments shall be shown in the Plans.

Indexes 402 and 470 through 476 shall be supplemented as required with project specific details that may be deemed necessary to complete the installation of the retrofit. These details may include locations and details of any existing utilities, conduits, drainage structures (including scuppers), sign structures and luminaire supports, and/or any other needed information not included in these Standards. In the event that the designs and details presented in the Standards do not closely match the existing

conditions, the Structures and/or Roadway Engineer(s) shall prepare a customized project specific retrofit design based on the crash tested bridge railing and guardrail transition designs presented in Indexes 402 and 470 through 476 as guides. Contact the Structures Design Office and Roadway Design Office for guidance in this event.

The Structures Engineer shall evaluate the thermal movements of the existing bridge using the following criteria and shall identify the locations in the Plans (if any are required) where a Thrie-Beam Expansion Section is to be included in the guardrail. If the total thermal movement at an individual bridge deck expansion joint is 1½" (¾" in each direction) or less, the Thrie-Beam Guardrail shall span the joint without the use of an expansion section. If the total thermal movement at an individual bridge deck expansion joint exceeds 1½", a Thrie-Beam Expansion Section must be installed at that location. The total amount of thermal movement at bridge deck expansion joints shall be determined by theoretical calculation and confirmed by field measurements where possible. It should be noted that the actual in-service movement due to thermal effects may be less than the value determined by theoretical calculation.

The Utility Adjustment Plans, if required, shall contain all necessary utility adjustment information required for the construction of the retrofit. Utilities and/or conduits may exist in or adjacent to the existing traffic railings and will vary in size, number and location. The presence, size, number and locations of existing utilities and/or conduits shall be determined by a review of existing Plans and confirmed by field verification. It should be noted that utility and/or conduit installations may vary by location on a single bridge. Thus, a field verification shall be conducted for each individual installation of the retrofit. Existing utilities and/or conduits that conflict with the retrofit shall be relocated if possible or placed out of service. The required field verification work should be completed as early in the evaluation phase as possible.

The Traffic Control Plans for the construction of the retrofit shall be prepared in accordance with Index 600 Series. The Plans shall address all aspects of the full or partial removal of the existing traffic railing (when required) and construction of the retrofit. Generally, the use of Indexes 471 and 474 will require the removal of the existing traffic railing and will require traffic control consisting of shifting, narrowing and/or closing of travel lanes and/or shoulders. In this case, the use of crash tested Precast Concrete Temporary Barriers will also be required to protect the drop-off exposed by the removal of the existing traffic railing.

Indexes 470 through 476 do not address retrofitting of the existing traffic railings, curbs or sidewalks for pedestrian use. The potential need to retrofit the existing bridge for pedestrian use shall be evaluated on a project by project basis and the necessary Plans developed accordingly. Generally, the potential effects on pedestrian use of the bridge will be confined to bridges with sidewalks or wide curbs. The use of the Side Mounted Bridge Pedestrian/Bicycle Retrofit Railing shown in Indexes 851 and 861, and the Pedestrian Safety Treatment shown in Index 400 shall be evaluated and noted in the Plans where appropriate. See the ***IDS*** for Indexes 851 and 861 for more information. The potential reduction in clear width of the curb or sidewalk caused by the installation of the retrofit and Pedestrian Safety Treatment shall be considered.

It should be noted that the existing traffic railings and/or guardrail end transitions may have been previously retrofitted utilizing a scheme presented in Roadway and Traffic ***Design Standards*** Index 401 (2000 and earlier Editions). In this event, the requirements for removal or replacement of the prior retrofit shall be evaluated and addressed in the Plans as required. The removal of the prior retrofit may be considered as incidental work with no separate payment made.

The applicability of the individual Standards to different curb widths and superstructure types is described as follows:

Index 471 - Applicable for existing narrow curbs as shown below. This index requires removal of the existing traffic railing to the top of the existing curb along the entire length of the bridge and wing walls. On flat slab type superstructures, the potential reduction in the vertical clearance beneath the bridge due to the installation of this index shall be considered.

Index 472 - Applicable for existing wide curbs or sidewalks as shown below. This index generally allows the entire existing traffic railing to remain in place.

Index 473 - Applicable for existing wide curbs or sidewalks as shown below. This index generally allows the entire existing traffic railing to remain in place.

Index 474 - Applicable for existing intermediate width curbs as shown below. This index requires removal of the existing traffic railing to the top of the existing curb along the entire length of the bridge and wing walls.

Index 475 - Applicable for existing wide curbs or sidewalks as shown below on bridges with decks that do not meet the strength requirements for Index 472. This index generally allows the entire existing traffic railing to remain in place. This index is primarily intended for use on bridges with superstructures consisting of longitudinally prestressed, transversely post-tensioned, solid or voided concrete slab units but it can also be used for other types of superstructures.

Index 476 - Applicable for existing wide curbs or sidewalks as shown below on bridges with decks that do not meet the strength requirements for Index 473. This index generally allows the entire existing traffic railing to remain in place. On flat slab type superstructures, the potential reduction in the vertical clearance beneath the bridge due to the installation of this index shall be considered. Indexes 471, 472 and 476 cannot be used on bridges with superstructures consisting of longitudinally prestressed, transversely post-tensioned, solid or voided concrete slab units.

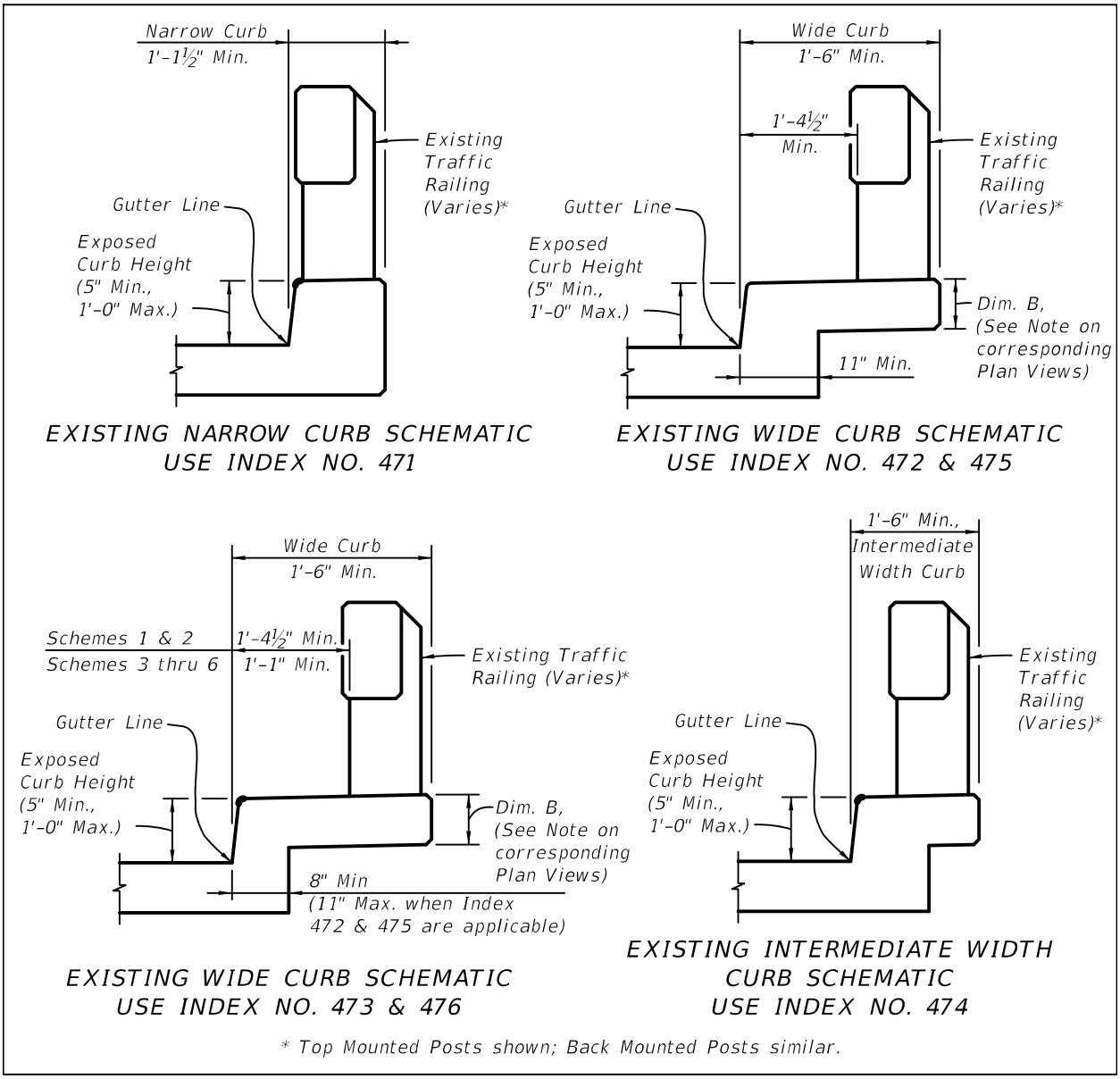

The applicability of the individual retrofit schemes to different wing wall configurations is shown below.

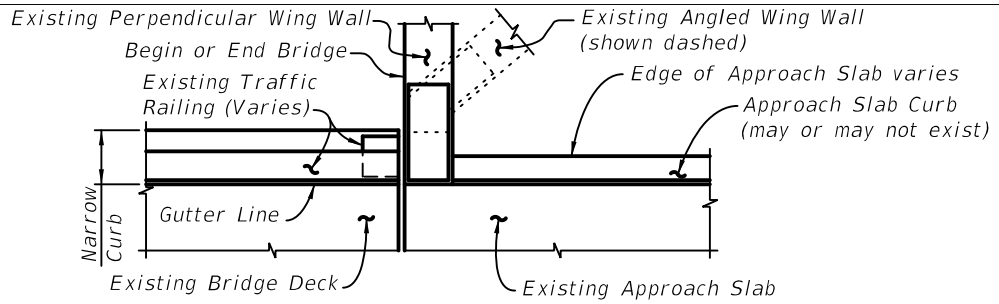

PARTIAL PLAN VIEW OF EXISTING BRIDGE WITH NARROW CURBS AND PERPENDICULAR OR ANGLED WING WALLS - USE INDEX NO. 471, SCHEME 1

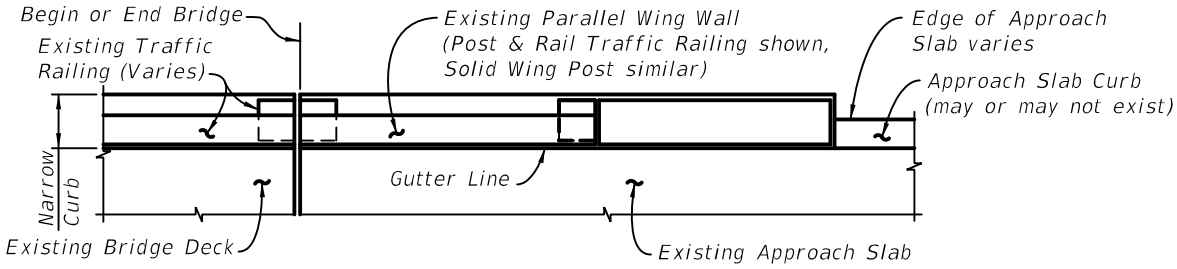

PARTIAL PLAN VIEW OF EXISTING BRIDGE WITH NARROW CURBS AND PARALLEL WING WALLS - USE INDEX NO. 471, SCHEME 2

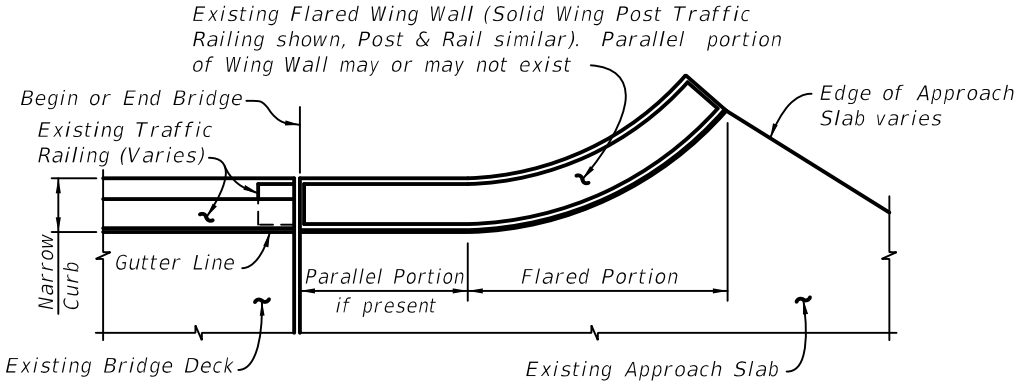

PARTIAL PLAN VIEW OF EXISTING BRIDGE WITH NARROW CURBS AND FLARED WING WALLS - USE INDEX NO. 471, SCHEME 3

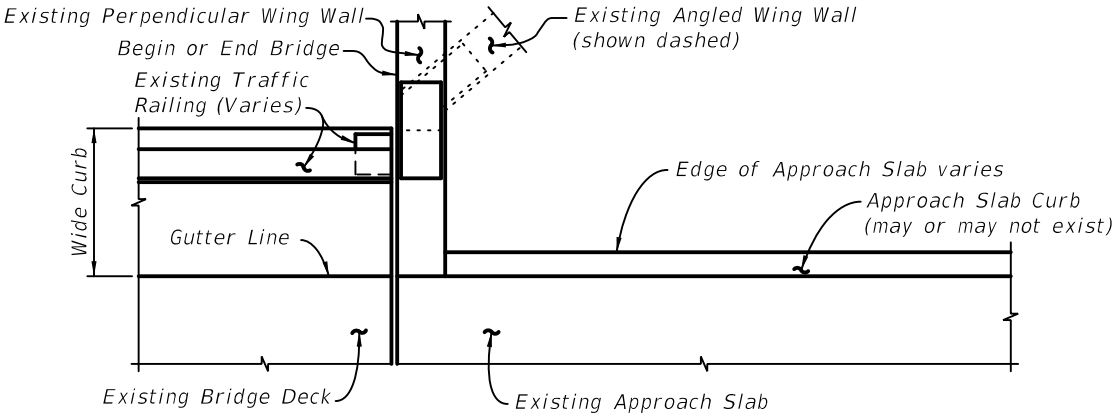

PARTIAL PLAN VIEW OF EXISTING BRIDGE WITH WIDE CURBS AND PERPENDICULAR OR ANGLED WING WALLS - USE INDEX NOS. 472, 473, 475 OR 476, SCHEME 1

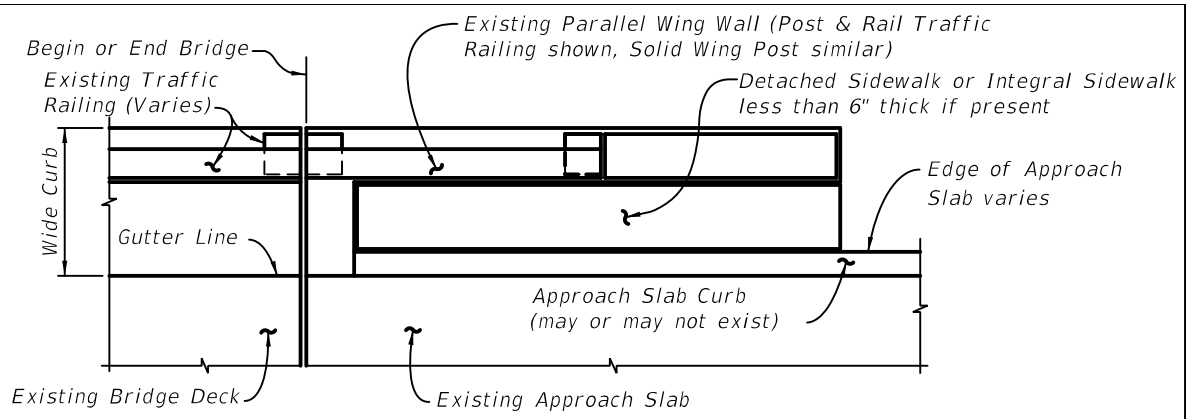

PARTIAL PLAN VIEW OF EXISTING BRIDGE WITH WIDE CURBS, PARALLEL WING WALLS AND APPROACH SLABS WITH DETACHED SIDEWALKS OR SIDEWALKS LESS THAN 6" THICK - USE INDEX NOS. 472, 473, 475 OR 476 SCHEME 2

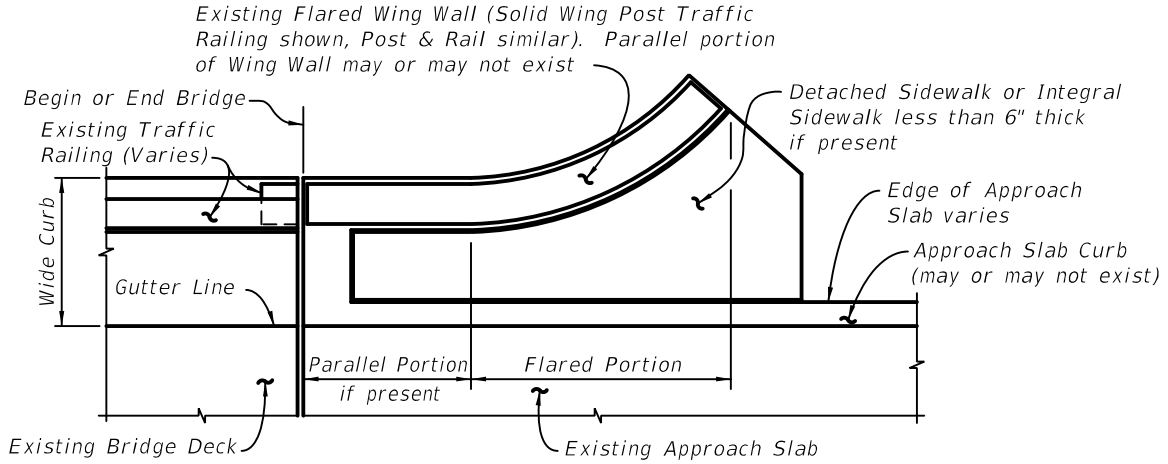

PARTIAL PLAN VIEW OF EXISTING BRIDGE WITH WIDE CURBS, FLARED WING WALLS AND APPROACH SLABS WITH DETACHED SIDEWALKS OR SIDEWALKS LESS THAN 6" THICK - USE INDEX NOS. 472, 473, 475 OR 476 SCHEME 2

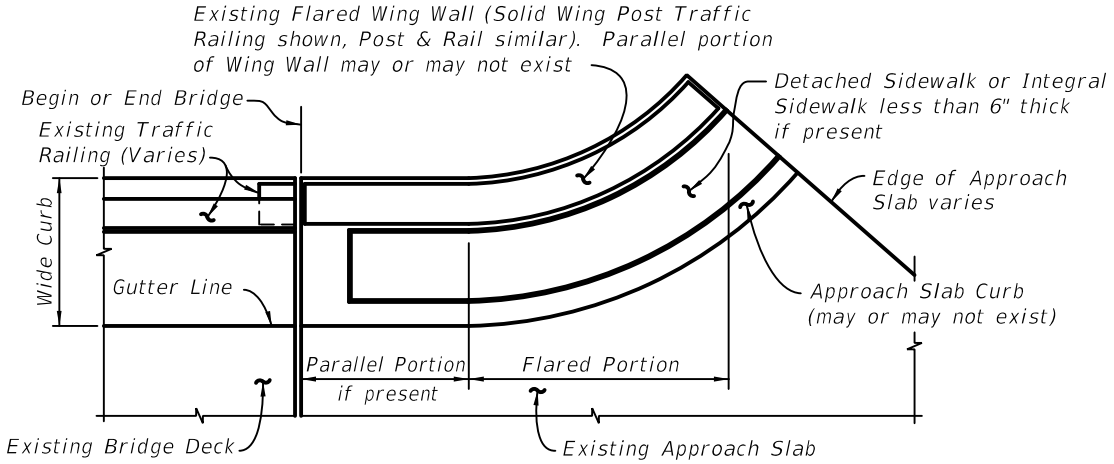

PARTIAL PLAN VIEW OF EXISTING BRIDGE WITH WIDE CURBS, FLARED WING WALLS AND APPROACH SLABS WITH DETACHED SIDEWALKS OR SIDEWALKS LESS THAN 6" THICK - USE INDEX NOS. 472, 473, 475 OR 476 SCHEME 2

NOTE: If Existing Curb or Wing Wall Dimension B is 1'-3" or greater use Scheme 3. If Existing Curb or Wing Wall Dimension B is equal to or greater than 6" but less than 1'-3", use Scheme 4. If Dimension B is less than 6", use Scheme 2. See Sheet 1 of 5 for Dimension B.

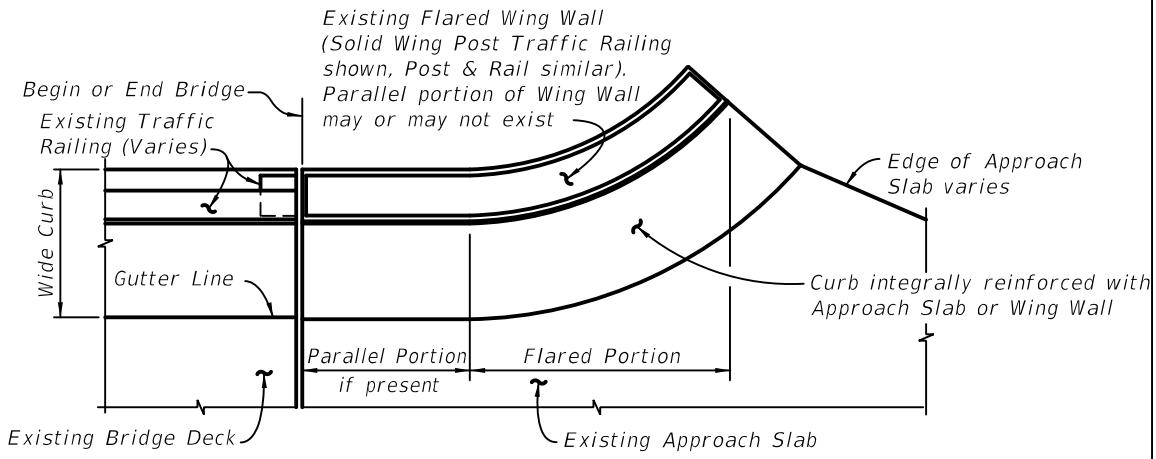

PARTIAL PLAN VIEW OF EXISTING BRIDGE WITH WIDE CURBS, FLARED WING WALLS AND FLARED INTEGRALLY REINFORCED APPROACH SLAB CURBS - USE INDEX NOS. 472, 473, 475 OR 476 SCHEMES 3 OR 4

NOTE: If Existing Curb or Wing Wall Dimension B is 1'-3" or greater use Scheme 5. If Existing Curb or Wing Wall Dimension B is equal to or greater than 6" but less than 1'-3", use Scheme 6. If Dimension B is less than 6", use Scheme 2. See Sheet 1 of 5 for Dimension B.

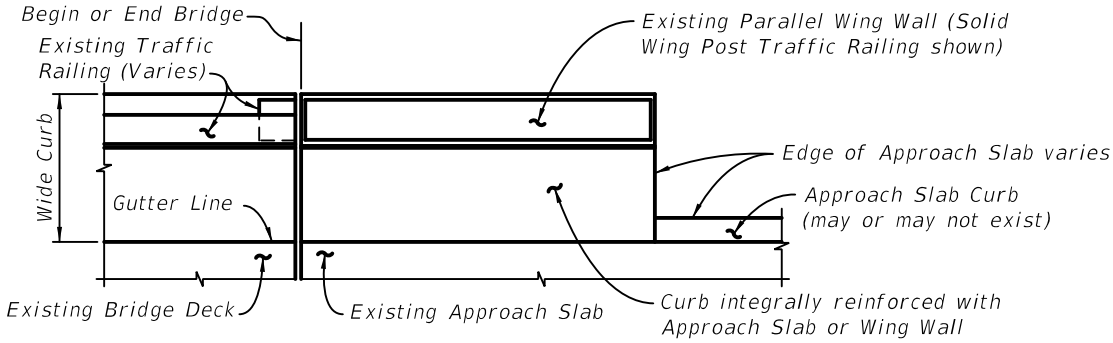

PARTIAL PLAN VIEW OF EXISTING BRIDGE WITH WIDE CURBS, PARALLEL WING WALLS AND INTEGRALLY REINFORCED APPROACH SLAB CURBS - USE INDEX NOS. 472, 473, 475 OR 476 SCHEMES 5 OR 6

NOTE: If Existing Curb or Wing Wall Dimension B is 1'-3" or greater use Scheme 5. If Existing Curb or Wing Wall Dimension B is equal to or greater than 6" but less than 1'-3", use Scheme 6. If Dimension B is less than 6", use Scheme 2. See Sheet 1 of 5 for Dimension B.

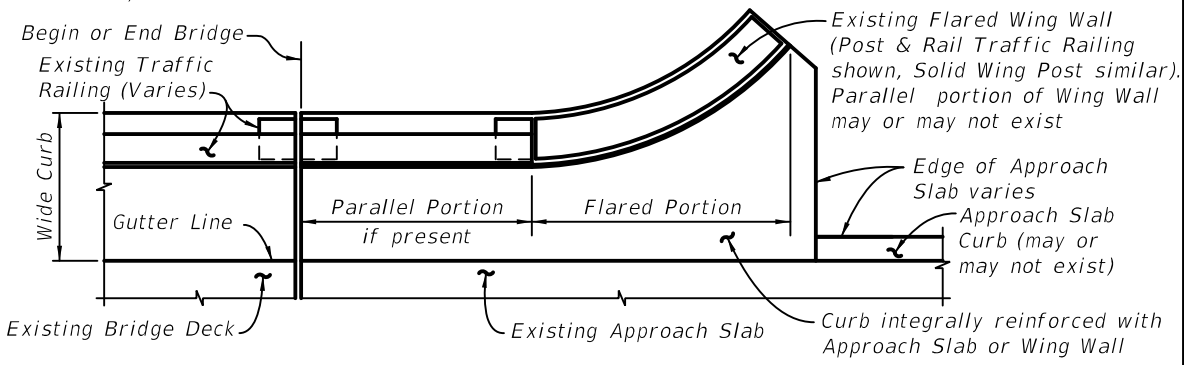

PARTIAL PLAN VIEW OF EXISTING BRIDGE WITH WIDE CURBS, FLARED WING WALLS AND PARALLEL INTEGRALLY REINFORCED APPROACH SLAB CURBS - USE INDEX NOS. 472, 473, 475 OR 476 SCHEMES 5 OR 6

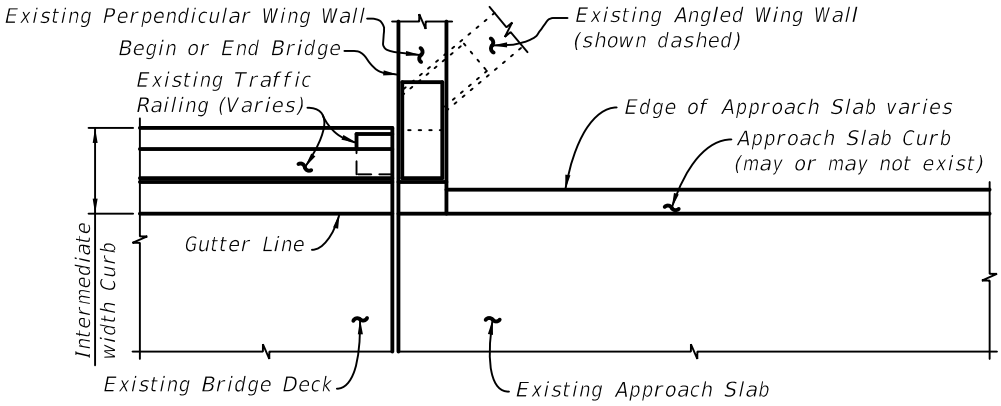

PARTIAL PLAN VIEW OF EXISTING BRIDGE WITH INTERMEDIATE WIDTH CURBS AND PERPENDICULAR OR ANGLED WING WALLS - USE INDEX NO. 474, SCHEME 1

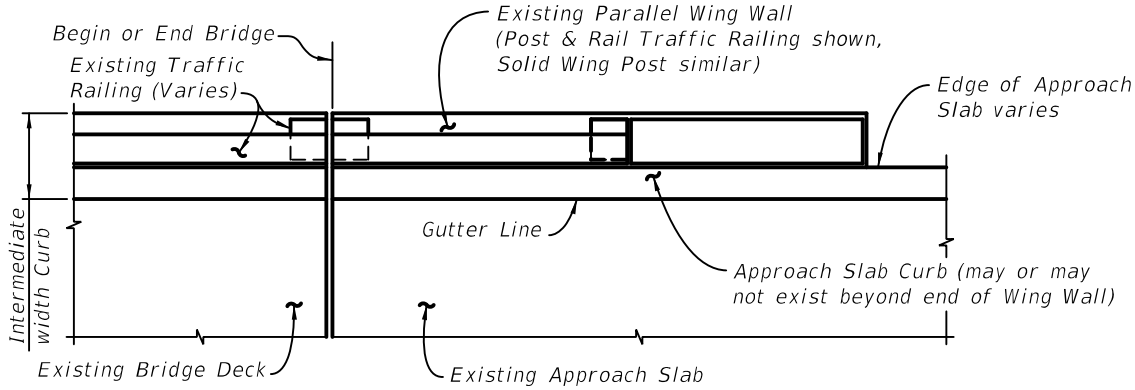

PARTIAL PLAN VIEW OF EXISTING BRIDGE WITH INTERMEDIATE WIDTH CURBS AND PERPENDICULAR OR ANGLED WING WALLS - USE INDEX NO. 474, SCHEME 2

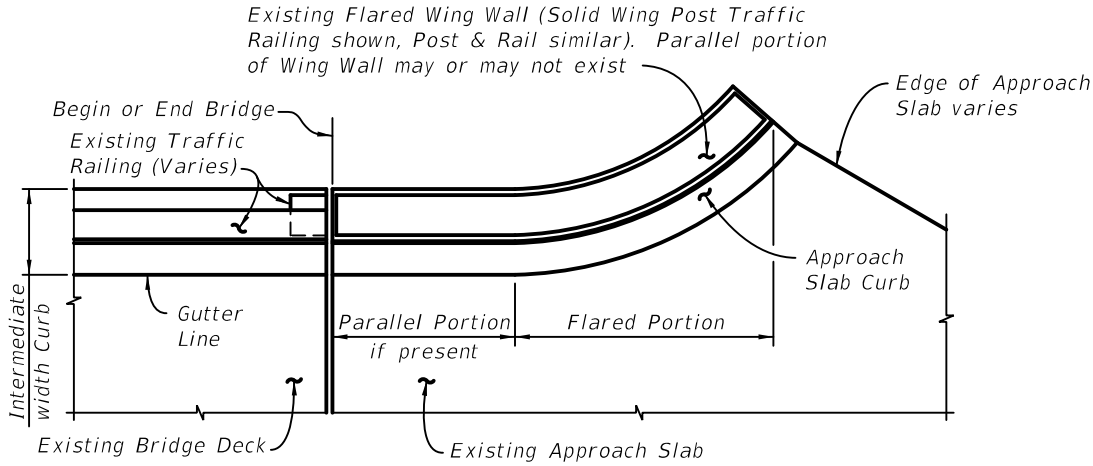

PARTIAL PLAN VIEW OF EXISTING BRIDGE WITH INTERMEDIATE WIDTH CURBS, FLARED WING WALLS AND FLARED INTEGRAL APPROACH SLAB CURBS - USE INDEX NO. 474, SCHEME 3

Plan Content Requirements

The appropriate ***Design Standards*** Index number and Scheme number shall be shown in the Roadway Plans for each bridge along with the limiting stations of the retrofit. The appropriate post designation of "A", "B" or "C" shall be determined and shown in the Plans for each bridge based on the criteria given in the Post Dimension Table on ***Design Standards*** Index 470. The selection of the appropriate post shall consider any proposed milling and resurfacing work.

The limiting stations or overall length of the retrofit for each bridge shall also be shown. An example of a note containing the required information as it would appear on a Plan or Plan-Profile sheet is as follows:

> "Construct Traffic Railing (Thrie-Beam Retrofit), Index No. 47X, Scheme X, from Sta. XX+XX.XX (at or near Begin Bridge) to Sta. XX+XX.XX (at or near End Bridge). On left side of bridge utilize Post "X". On right side of bridge utilize Post "X". See ***Design Standards*** Index 470 for post details."

If the same height post can be used on both sides of the bridge, a single post designation is all that is required.

For projects with multiple bridges, a tabular format may be used to convey the necessary information.

A separate Plan and Elevation sheet of the type used in Structures Plans is generally not required.

Payment

Item number	Item description	Unit Measure
460-71-1	Metal Traffic Railing, Thrie Beam Retrofit	LF
110-3-6*	Removal of Existing Structures	LF

* As required per the Design Assumptions and Limitations.

Example Quantity Calculations

The following examples cover the three general cases for quantity calculations for the length of payment along each side of a bridge:

CASE I - Indexes 471 and 474 Scheme 2 and Indexes 472, 473, 475 and 476 Schemes 5 and 6 - Traffic Railing (Thrie-Beam Retrofit) extends close to the end of the wing wall or parallel curb on the approach slab.

CASE II - Indexes 471, 472, 473, 474, 475 and 476 Scheme 1 and Indexes 472, 473, 475 and 476 Scheme 2 - Traffic Railing (Thrie-Beam Retrofit) extends close to the end of the bridge deck.

CASE III - Indexes 472, 473, 475 and 476 Schemes 3 and 4 and Index 474 Scheme 3 - Traffic Railing (Thrie-Beam Retrofit) extends far enough along the flared curb until the Special Steel Guardrail Post can be located on the approach slab.

In the following examples, it is assumed that the trailing end treatment is the same as the approach end treatment. For Case III, Indexes 472, 473, 475 and 476 Schemes 3 and 4, different trailing end treatments usually give an error of less than one foot for each side of the bridge. Different trailing end treatments for Case III, Index 474 Scheme 3 may give an error of ± 3'-0", due to the flexibility given to the Contractor for locating the posts on the flared wing wall. The Designer may need to show stationing limits in the plans for these Standard Indexes when the location of a site specific end treatment is critical. Different trailing end treatments for Case I and Case II will have no effect on the length of payment.

For bridges with different wing wall lengths at begin and end bridge, such as skewed bridges, the calculated lengths should be adjusted accordingly for Cases I & III.

For curved bridges the length of payment shall be measured along the gutter line, and the arc angle projection of the gutter line for flared curbs (Case III).

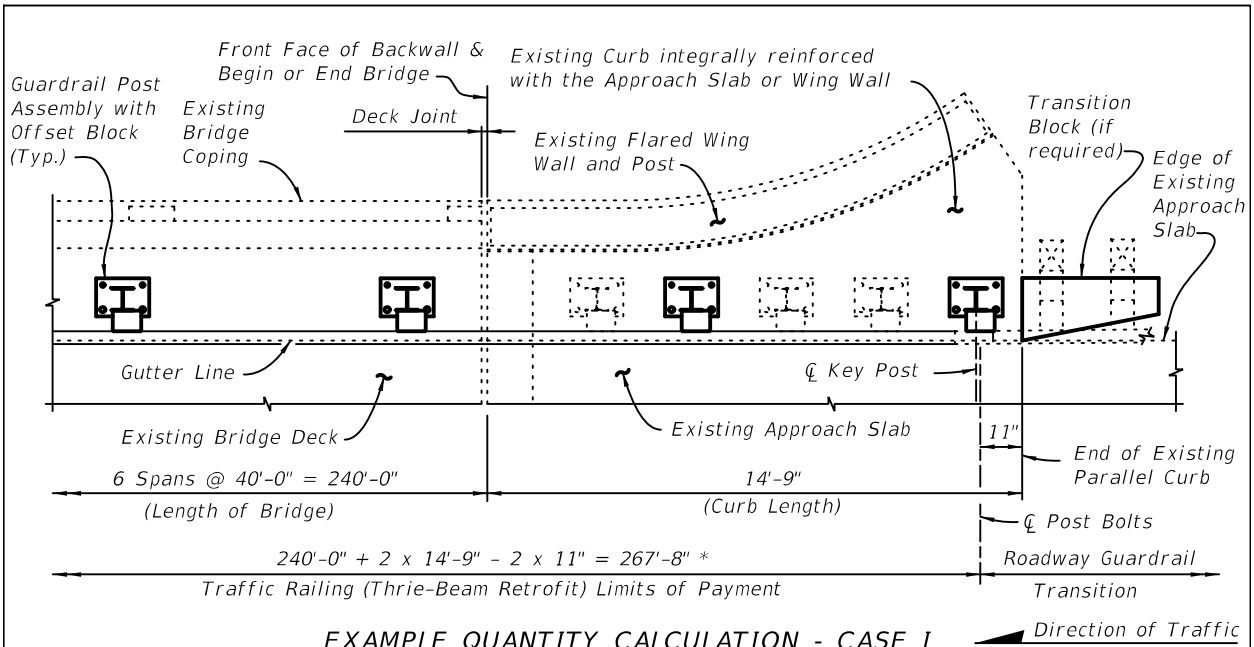

EXAMPLE QUANTITY CALCULATION - CASE I
(INDEX NO. 472 SCHEMES 5 AND 6 SHOWN,
INDEX NOS. 471 AND 474 SCHEME 2 AND INDEX NOS. 473, 475 AND 476
SCHEMES 5 AND 6 SIMILAR)

* Total length could vary - 5⅞" to + 9⅛" due to trailing end treatment and positioning of end posts for minimum anchor clearances.

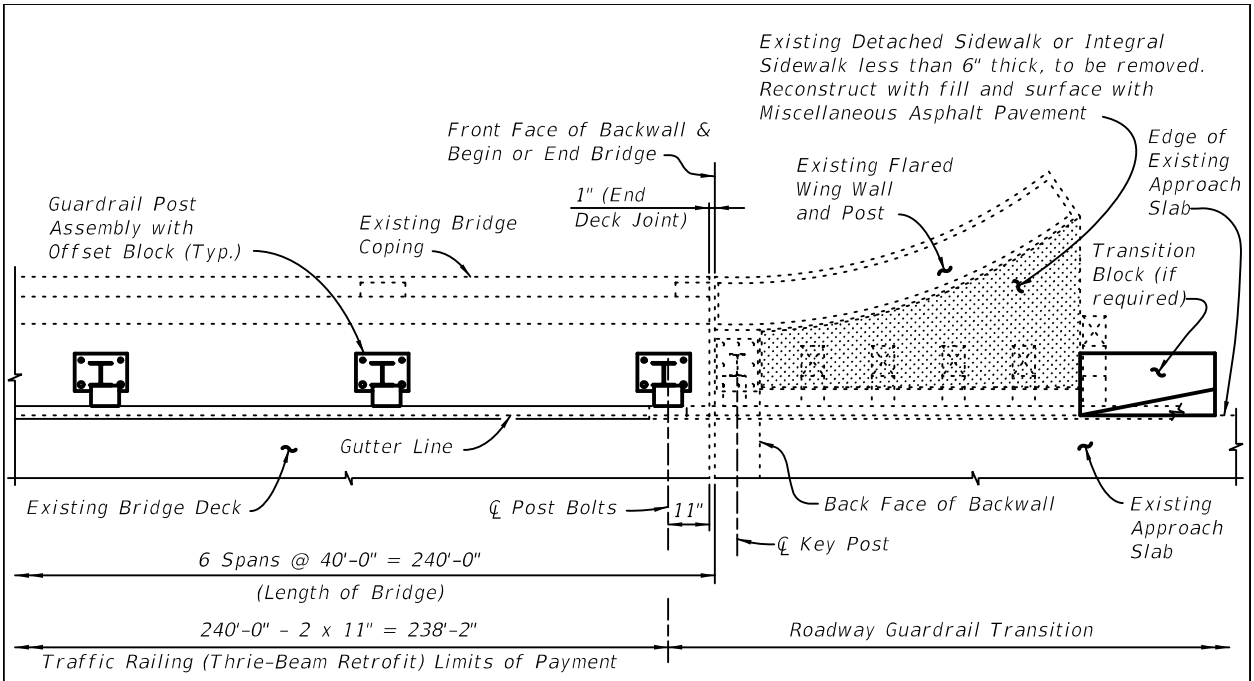

EXAMPLE QUANTITY CALCULATION - CASE II
(INDEX NO. 472 SCHEME 2 SHOWN,
INDEX NOS. 471, 472, 473, 474, 475 AND 476
SCHEME 1 AND INDEX NOS. 473 AND 476 SCHEME 2 SIMILAR)

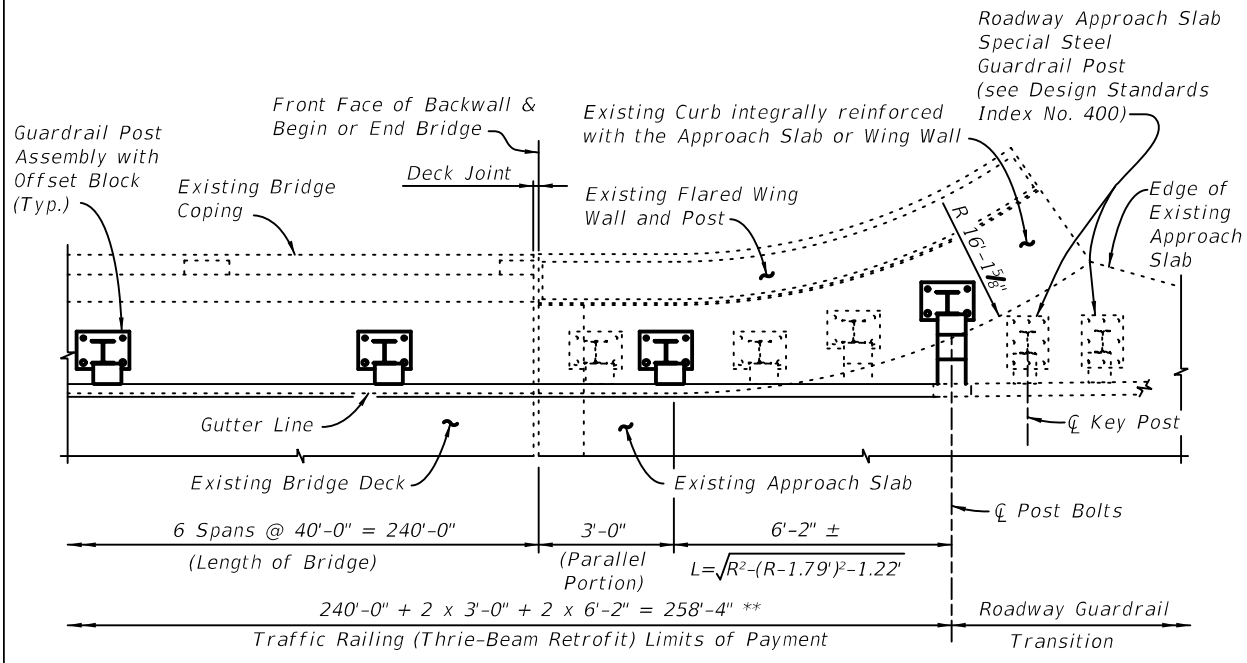

EXAMPLE QUANTITY CALCULATION - CASE III
(INDEX NO. 472 SCHEMES 3 AND 4 SHOWN,
INDEX NOS. 473, 475 AND 476 SCHEMES 3 AND 4
AND INDEX NO. 474 SCHEME 3 SIMILAR)

** Total length could vary due to trailing end treatment.

Index 477 Thrie-Beam Panel Retrofit (Concrete Handrail)

Design Criteria

AASHTO LRFD Bridge Design Specifications, 6th Edition, Section 13; ***Structures Design Guidelines (SDG)***

Design Assumptions and Limitations

This Design Standard is applicable for use along bridges or roadways with design speeds of 45 mph or less and where the existing traffic railing is structurally sound and free of major cracks or spalls. Contact the Structures Design Office regarding potential applications on bridges with higher design speeds.

This Design Standard is applicable for retrofitting a specific type of existing bridge mounted traffic railing (concrete handrail) which is not based on a crash tested design. This Design Standard differs from Design Standards Indexes 470-476 in that the existing traffic railing stays in place and the retrofit 10 Gauge Thrie-Beam Guardrail panels are bolted directly to the existing railing.

In the event that the designs and details presented in this Design Standard do not closely match the existing conditions, and if this Design Standard is ultimately determined to be appropriate for use, the Structures and/or Roadway Engineer(s) may prepare a customized project specific retrofit design based on the bridge railing and guardrail transition designs presented in this Design Standard as a guide. Contact the Structures Design Office for guidance in this event.

This Design Standard is intended for retrofitting existing Post and Beam Concrete Handrails (traffic railings) as shown on these and other similar obsolete Indexes with geometry and reinforcing as shown:

Index 10257 Concrete Handrail (1969 and 1970 with 1975 Revision)

Index 10257-MOD Concrete Handrail (1970 with 1971 and 1973 Revisions)

Index 10266 Concrete Handrail (1969 with 1973, 1974 and 1975 Revisions)

Index 10276 Concrete Handrail and Light Standard Pilaster Details (1969 with 1973 Revisions)

Determine the applicability of this Design Standard to a particular bridge based on a review of the Load Rating of the existing bridge and a comparison of the existing railing geometry to that shown for this. The average weight per linear foot of the retrofit is 20 lb/ft.

The Thrie-Beam Trailing End Transition is for use only when a line of guardrail is located outside of the Clear Zone of any opposing Travel Way. In all other cases, use the Thrie-Beam Approach Transition on each end of each line of guardrail.

The treatment of the approach and trailing ends of the retrofit shall consist of the Thrie Beam Approach Transition and Trailing End Transition, respectively, as shown on the Design Standard. The appropriate guardrail treatments beyond the Approach and Trailing End Transitions shall be determined by the Roadway Engineer. As a minimum, if

no other hazards are present, an End Anchorage Assembly Type II shall be provided on the trailing end of the retrofit. On approach ends, a Transition Block or Curb is required at the end of the bridge/wingwall if the existing Approach Slab does not have a curb. A Transition Block is not required on trailing ends of bridges having no opposing traffic; however, a Curb may be required due to drainage needs. An Index 300, Type D Concrete Curb is generally suitable for this application.

The Structures Engineer shall identify the locations in the Plans (if any are required) where a Thrie-Beam Expansion Section is to be included in the guardrail. Evaluate the thermal movements of the existing bridge using the following criteria: If the total thermal movement at an individual bridge deck expansion joint is 1½" (¾" in each direction) or less, the Thrie-Beam Guardrail shall span the joint without the use of an expansion section. If the total thermal movement at an individual bridge deck expansion joint exceeds 1½", a Thrie-Beam Expansion Section must be installed at that location. The total amount of thermal movement at bridge deck expansion joints shall be determined by theoretical calculation and confirmed by field measurements where possible. It should be noted that the actual in-service movement due to thermal effects may be less than the value determined by theoretical calculation.

This Design Standard does not address retrofitting of the existing traffic railings, curbs or sidewalks for pedestrian use. The potential need to retrofit the existing bridge for pedestrian use shall be evaluated on a project by project basis and the necessary Plans developed accordingly.

Plan Content Requirements

Generally, this Design Standard can be used without any modifications being made to it. A separate Plan and Elevation sheet of the type used in Structures Plans is recommended. If project specific details are required, use this Design Standard as a guide for developing general notes and details to be included in the plans.

Supplement this Design Standard as required with project specific details that may be deemed necessary to complete the installation of the retrofit. These details may include locations and details of any existing utilities, conduits, drainage structures, sign structures and luminaire supports, and any other needed information not included in this Design Standard.

Include a reference note in the Roadway Plans for each bridge along with the limiting stations of the retrofit. Show the limiting stations or overall length of the retrofit for each bridge. An example of a note containing the required information as it would appear on a Plan or Plan-Profile sheet is as follows:

"Construct Thrie-Beam Panel Retrofit (Concrete Handrail), Index No. 477, from Sta. XX+XX.XX (at or near Begin Bridge) to Sta. XX+XX.XX (at or near End Bridge)."

For projects with multiple bridges, a tabular format may be used to convey the necessary information.

Also show the appropriate site specific approach and trailing end treatments in the Plans.

The Utility Adjustment Plans, if required, shall contain all necessary utility adjustment information required for the construction of the retrofit. Utilities and/or conduits may exist in or adjacent to the existing traffic railings and will vary in size, number and location. The presence, size, number and locations of existing utilities and/or conduits shall be determined by a review of existing Plans and confirmed by field verification. It should be noted that utility and/or conduit installations may vary by location on a single bridge. Thus, a field verification shall be conducted for each individual installation of the retrofit. Existing utilities and/or conduits that conflict with the retrofit shall be relocated if possible or placed out of service. The required field verification work should be completed as early in the evaluation phase as possible.

The Traffic Control Plans for the construction of the retrofit shall be prepared in accordance with Index 600 Series. The Plans shall address all aspects of the construction of the retrofit. Generally, the use of this Design Standard may require traffic control consisting of shifting, narrowing and/or closing of travel lanes and/or shoulders.

The existing guardrail end transitions may have been previously retrofitted utilizing a scheme presented in Roadway and Traffic Design Standards Index 401 (2000 and earlier Editions). In this event, the requirements for removal or replacement of the prior retrofit shall be evaluated and addressed in the Plans as required. Include a Pay Item note in the plans stating that removal of the prior retrofit is considered incidental work with no separate payment made.

Payment

Item number	Item description	Unit Measure
460-72-1	Thrie-Beam Panel Retrofit (Concrete Handrail)	LF

Index 480 Series Traffic Railing - (Vertical Face Retrofit) (Rev. 11/16)

Design Criteria

NCHRP Report 350, Test Level 4; ***AASHTO LRFD Bridge Design Specifications***, 6th Edition, Section 13; ***Structures Design Guidelines (SDG)***

Design Assumptions and Limitations

Index 480 is the lead standard for the Traffic Railing (Vertical Face Retrofit) standard series which includes Indexes 480 through 484. Use this standard with Indexes 402, 410, 481, 482, 483 and 484.

The Traffic Railing (Vertical Face Retrofit), Indexes 480 through 483, are applicable for retrofitting specific types of existing bridge mounted traffic railings (a.k.a. concrete handrails) that are not based on crash tested designs.

Index 484 should only be used when space is limited, which precludes the use of a guardrail end treatment or crash cushion. Determine the Length of Advancement for the Tapered End Transition using the criteria shown on Index 484, Sheet 1. Indexes 480 through 484 are not acceptable as alternatives for new construction.

These Standards are to be used in conjunction with Indexes 402 and 410. The appropriate Index 402 approach transition retrofit for Index 480 Series bridge railing retrofits or Index 484 Tapered End Transition must be selected and specified in the plans based on the shapes and designs of the existing bridge traffic railings, approach slabs and end bent wing walls. See the Instructions for Index 402 and ***SDG*** 6.7 for more information.

The applicability of the Vertical Face Retrofit to a particular bridge shall be determined based on a review of the Load Rating of the existing bridge, a comparison of the existing bridge geometry to that shown for the Vertical Face Retrofit and an evaluation of the structural adequacy of the existing bridge deck and wing walls in accordance with the requirements of the ***SDG***. See ***SDG*** 2.2 for average weight per linear foot of the retrofit.

The Traffic Railing (Vertical Face Retrofit) has been structurally evaluated to be equivalent or greater in strength to a design which has been successfully crash tested previously and approved for a ***NCHRP Report 350*** Test Level 4 rating. The Standards all utilize a cast in place, vertical face, reinforced concrete block that is installed adjacent to the face of the existing curb and in front of, or in place of, all or part of the existing traffic railing. The Standards work with existing traffic railings that incorporate either solid concrete parapet type or concrete post and beam type railings with or without top mounted metal railings. These existing traffic railings are typically mounted on top of concrete curbs of varying widths and heights. The individual Standards address both narrow and wide curbs (a.k.a. "safety curbs"), and skewed and non-skewed bridges with parallel, perpendicular, angled or flared end bent wing walls. Each Standard includes several schemes that address the given wing wall configurations. Examples depicting existing curb and end bent wing wall configurations are shown in the Existing Curb Schematic and the Partial Plan Views of Existing Bridges herein.

Generally, the Roadway Plans shall include all of the sheets necessary to define and detail the retrofit of the existing traffic railings. Index 480, Traffic Railing (Vertical Face Retrofit) General Notes and Details, shall be referenced in the Roadway Plans or a similar project specific drawing depicting general notes and details, shall be included in the Roadway Plans. In addition, one or more of the appropriate Indexes 481 through 484, that most closely matches the configuration of the existing traffic railing and curb is to be referenced in the Roadway Plans for each bridge as required. Generally, these Standards can be used without any modifications being made to them. More than one of the Indexes 481 through 484, may be required for a single bridge due to the curbs or sidewalks on the two sides of the bridge possibly having different widths.

The need to remove all or part of the existing traffic railing down to the top of the curb in order to provide room for the construction of the retrofit is addressed in the individual retrofit indexes. Payment for the removal of all or part of the existing traffic railing shall be included in Removal of Existing Structures, Pay Item 110-3. As part of the overall retrofit concept for a bridge, the existing traffic railing may be removed, even though it is not specifically required to be, in order to reduce the dead load carried by the bridge. In these cases, the potential drop off hazard for pedestrians that will be created behind the retrofit shall be addressed in the Plans.

The treatment of the approach end of the retrofit shall consist of Index 402, 484 or another appropriate site specific treatment. The appropriate treatment of the trailing end of the retrofit shall be determined by the Roadway Engineer. On approach ends, a Transition Block or Curb is required if the existing Approach Slab does not have a curb. A Transition Block is not required on trailing ends with no opposing traffic, however, a Curb may be required due to drainage needs. An Index 300, Type D Concrete Curb is generally suitable for this application. The appropriate site specific approach and trailing end treatments shall be shown in the Plans.

If an Index 402 Roadway Guardrail Transition is used, the defining station of the end of the transition must be shown in the Plans. The attachment point for the Thrie-Beam Terminal Connector shall be determined based on the shape, length, structural adequacy and direct means of support of the end most section of the Vertical Face Retrofit, the existing wing wall and/or approach slab as follows:

Perpendicular or Angled Wing Walls -

Attach the Thrie-Beam Terminal Connector to the Vertical Face Retrofit on the bridge.

Parallel Wing Walls -

1. If the Vertical Face Retrofit is supported by the wing wall, attach the Thrie-Beam Terminal Connector to the Vertical Face Retrofit along the wing wall if the wing wall is a minimum of 5'-0" long, directly pile supported and structurally adequate. If the Vertical Face Retrofit is supported by the approach slab, attach the Thrie-Beam Terminal Connector along the approach slab section of the retrofit if that section is a minimum of 5'-0" long.
2. Attach Thrie-Beam Terminal Connector to the Vertical Face Retrofit on the bridge if the any of the appropriate preceding criteria for parallel wing walls or approach slabs are not met.

Flared Wing Walls with parallel portions -

1. If the Vertical Face Retrofit is supported by the wing wall, attach the Thrie-Beam Terminal Connector to the Vertical Face Retrofit along the parallel portion of the Vertical Face Retrofit if the wing wall is a minimum of 5'-0" long, directly pile supported, structurally adequate and if the parallel portion of Vertical Face Retrofit is a minimum of 2'-0" long. If the Vertical Face Retrofit is supported by the approach slab, attach the Thrie-Beam Terminal Connector along the approach slab section of the retrofit if that section is a minimum of 5'-0" long and has a parallel portion that is a minimum of 2'-0" long.
2. Attach Thrie-Beam Terminal Connector to the Vertical Face Retrofit on the bridge if any of the preceding criteria for flared wing walls with parallel portions are not met.

Flared Wing Walls without parallel portions -

Attach Thrie-Beam Terminal Connector to the Vertical Face Retrofit on the bridge.

Indexes 402 and 480 through 484 shall be supplemented as required with project specific details that may be deemed necessary to complete the installation of the retrofit railing. These details may include locations and details of any existing utilities, conduits, drainage structures, sign structures and luminaire supports, or designs and details of traffic railing sliding plate assemblies for large expansion joints and any other needed information not included in these Standards. In the event that the details and indexes presented in these Standards do not closely match the existing conditions, the Structures and/or Roadway Engineer(s) shall prepare a customized project specific retrofit design using the crash tested bridge railing and guardrail transition designs presented in Indexes 402 and 480 through 484 as guides. Contact the Structures Design Office and Roadway Design Office for guidance in this event.

The Utility Adjustment Plans, if required, shall contain all necessary utility adjustment information required for the retrofit of the existing traffic railings. Utilities and/or conduits may exist in or adjacent to the existing traffic railings and will vary in size, number and location. The presence, size, number and locations of existing utilities and/or conduits shall be determined by a review of existing Plans and confirmed by field verification. It should be noted that utility and/or conduit installations may vary by location on a single bridge. Thus, a field verification shall be conducted for each individual installation of the retrofit. Existing utilities and/or conduits that conflict with the retrofit shall be relocated if possible or placed out of service. The required field verification work should be completed as early in the evaluation phase as possible.

The Traffic Control Plans for the construction of the retrofit shall be prepared in accordance with Index 600 Series. The Plans shall address all aspects of the full or partial removal of the existing traffic railing (when required) and construction of the retrofit. Generally, the use of Indexes 481 and 483 will require the removal of the existing traffic railing and will require traffic control consisting of shifting, narrowing and/or closing of travel lanes and/or shoulders. In this case, the use of crash tested Precast Concrete Temporary Barriers will also be required to protect the drop-off exposed by the removal of the existing traffic railing.

Indexes 480 through 484 do not address retrofitting of the existing traffic railings, curbs or sidewalks for pedestrian use. The potential need to retrofit the existing bridge for pedestrian use shall be evaluated on a project by project basis and the necessary Plans developed accordingly. Generally, the potential effects on pedestrian use of the bridge will be confined to bridges with sidewalks or wide curbs. The use of the Side Mounted Bridge Pedestrian/Bicycle Retrofit Railing shown in Indexes 851 and 861 shall be evaluated and noted in the Plans where appropriate. See the IDS for Indexes 851 and 861 for more information. The potential reduction in clear width of the curb or sidewalk caused by the installation of the retrofit shall be considered.

It should be noted that the existing traffic railings and/or guardrail end transitions may have been previously retrofitted utilizing a scheme presented in Roadway and Traffic ***Design Standards*** Index 401 (2000 and earlier Editions). In this event, the requirements for removal, modification or replacement of the prior retrofit shall be evaluated and addressed in the Plans as required. Of the retrofit schemes presented in Roadway and Traffic ***Design Standards*** Index 401, only Schemes 1 and 19 can be left in place and utilized as a component of the crash tested designs presented in Indexes 402 and 480 through 484. The removal of the prior retrofit, if required, may be considered as incidental work with no separate payment made.

The applicability of the individual retrofit schemes to different wing wall configurations is shown in the following views.

The applicability of the individual Standards to different curb widths is described as follows:

Index 481 - Applicable for existing narrow curbs as shown below. This index requires removal of the existing traffic railing to the top of the existing curb along the entire length of the bridge and wing walls.

Index 482 - Applicable for existing wide curbs or sidewalks as shown below. This index generally allows the entire existing traffic railing to remain in place.

Index 483 - Applicable for existing intermediate width curbs as shown below. This index requires removal of the existing traffic railing to the top of the existing curb along the entire length of the bridge and wing walls.

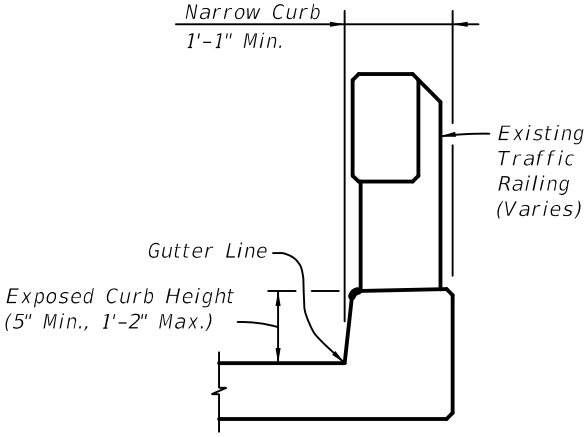

EXISTING NARROW CURB SCHEMATIC
USE INDEX NO. 481

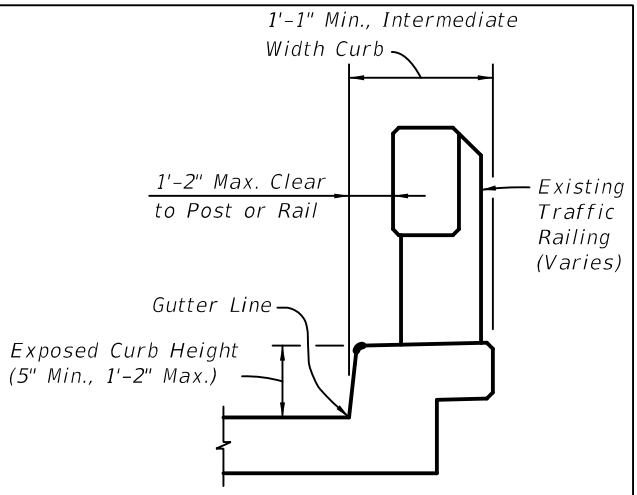

EXISTING INTERMEDIATE
WIDTH CURB SCHEMATIC
USE INDEX NO. 483

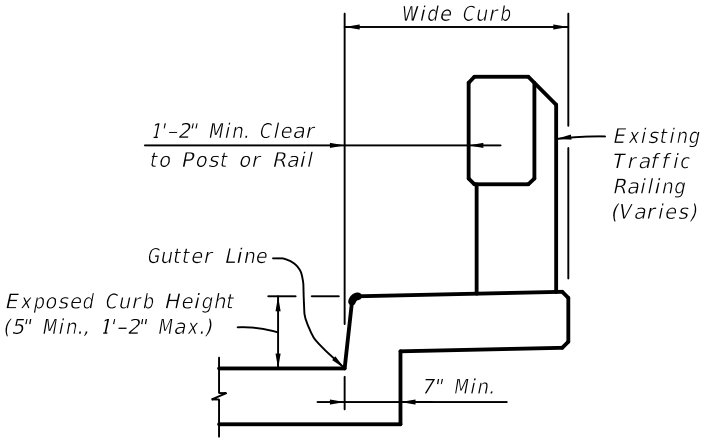

EXISTING WIDE CURB SCHEMATIC
USE INDEX NO. 482

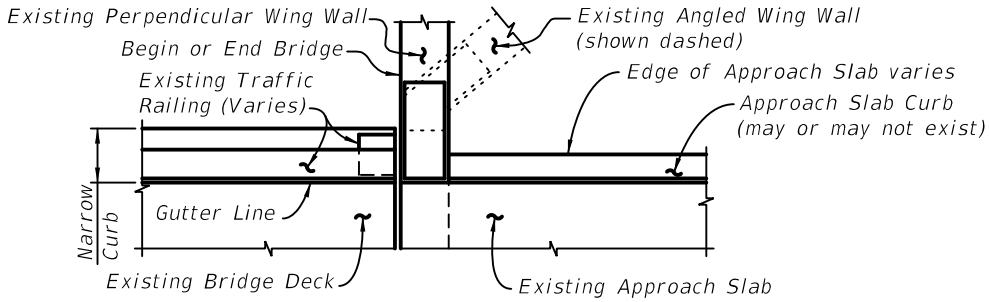

PARTIAL PLAN VIEW OF EXISTING BRIDGE WITH NARROW CURBS AND PERPENDICULAR OR ANGLED WING WALLS - USE INDEX NO. 481, SCHEME 1

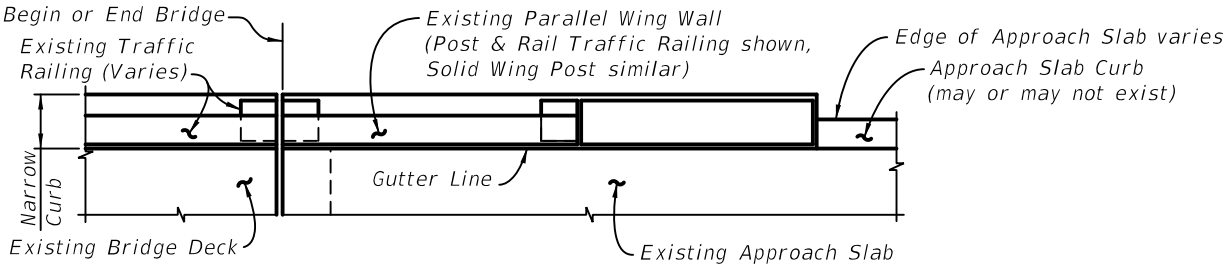

PARTIAL PLAN VIEW OF EXISTING BRIDGE WITH NARROW CURBS AND PARALLEL WING WALLS - USE INDEX NO. 481, SCHEME 2

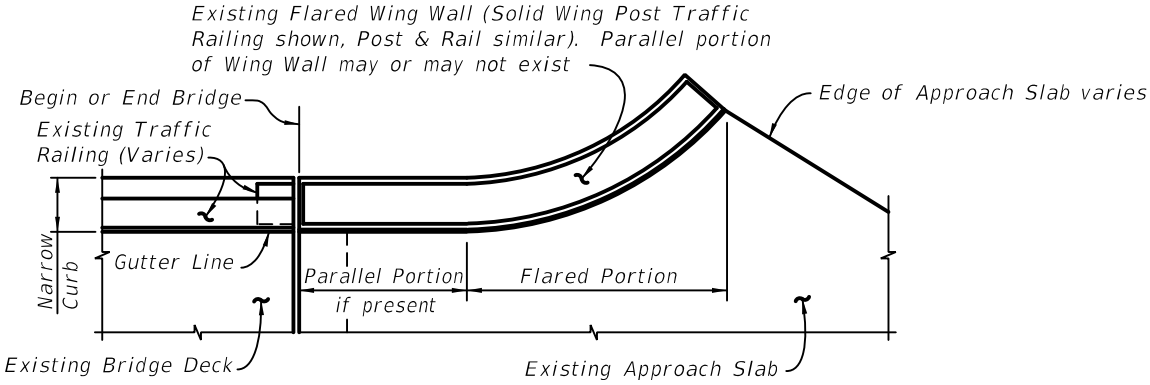

PARTIAL PLAN VIEW OF EXISTING BRIDGE WITH NARROW CURBS AND FLARED WING WALLS - USE INDEX NO. 481, SCHEME 3

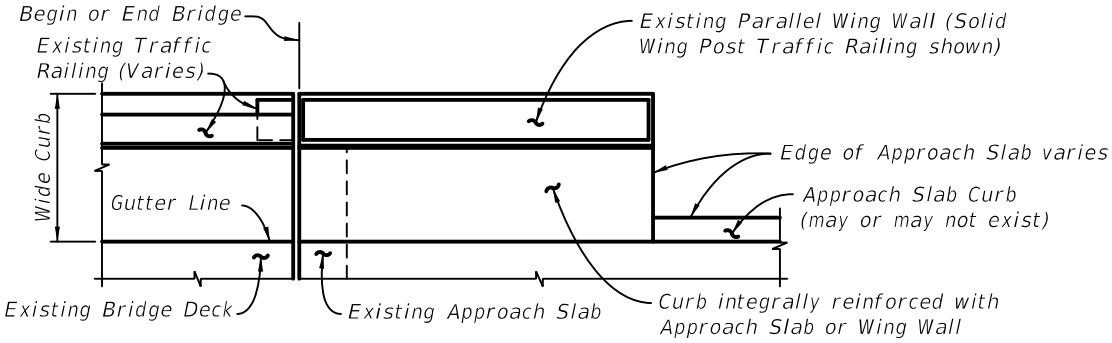

PARTIAL PLAN VIEW OF EXISTING BRIDGE WITH WIDE CURBS, PARALLEL WING WALLS AND INTEGRALLY REINFORCED APPROACH SLAB CURBS - USE INDEX NO. 482, SCHEME 2

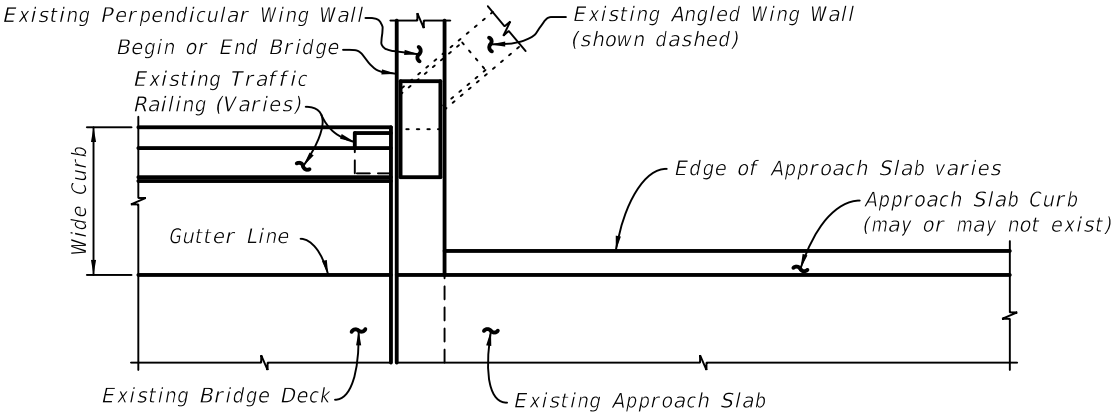

PARTIAL PLAN VIEW OF EXISTING BRIDGE WITH WIDE CURBS AND PERPENDICULAR OR ANGLED WING WALLS - USE INDEX NO. 482, SCHEME 1

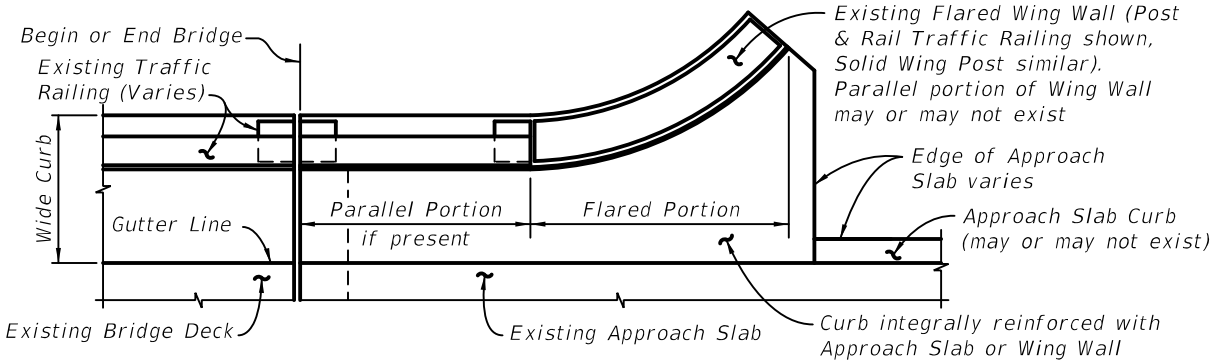

PARTIAL PLAN VIEW OF EXISTING BRIDGE WITH WIDE CURBS, FLARED WING WALLS AND PARALLEL INTEGRALLY REINFORCED APPROACH SLAB CURBS - USE INDEX NO. 482, SCHEME 2

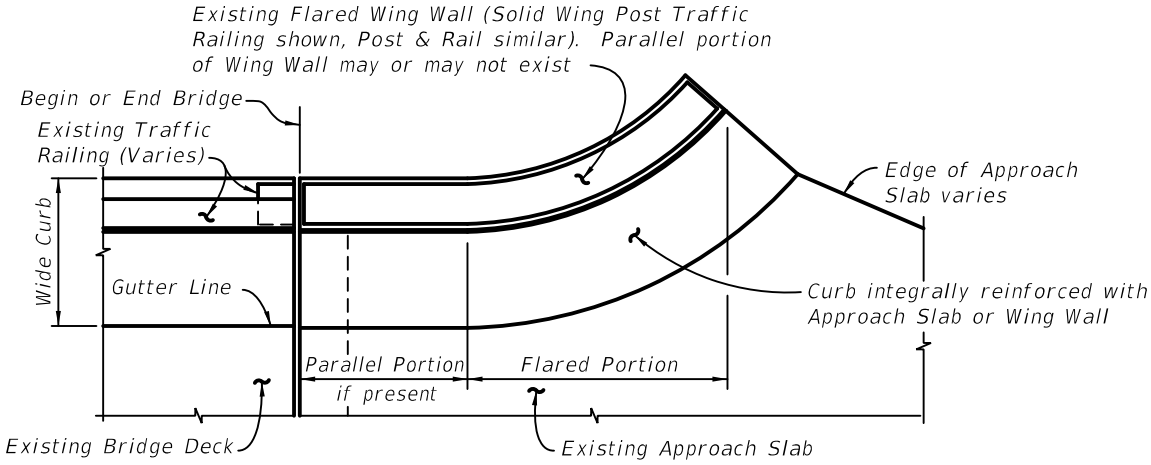

PARTIAL PLAN VIEW OF EXISTING BRIDGE WITH WIDE CURBS, FLARED WING WALLS AND FLARED INTEGRALLY REINFORCED APPROACH SLAB CURBS - USE INDEX NO. 482, SCHEME 3

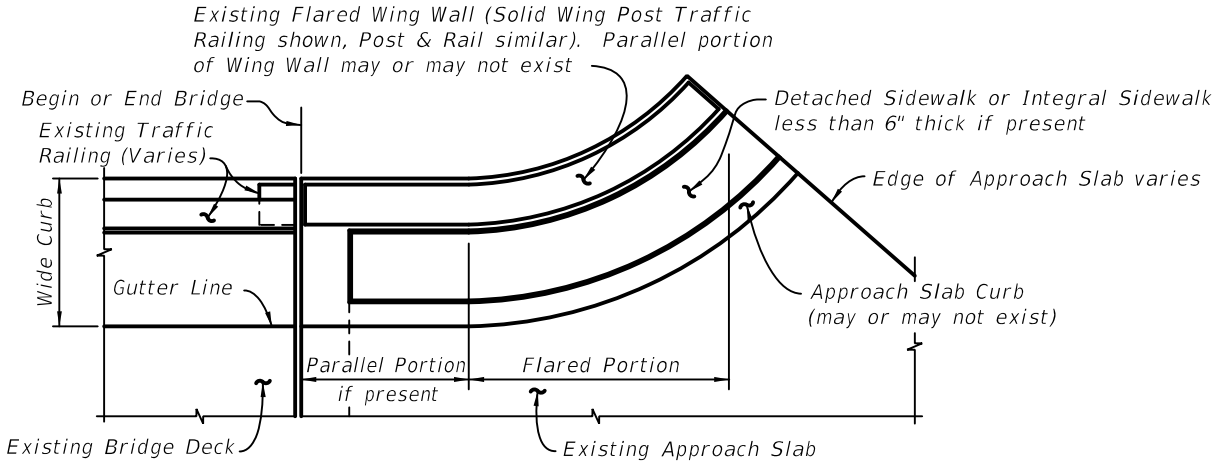

PARTIAL PLAN VIEW OF EXISTING BRIDGE WITH WIDE CURBS, FLARED WING WALLS AND APPROACH SLABS WITH DETACHED SIDEWALKS OR SIDEWALKS LESS THAN 6" THICK - USE INDEX NO. 482, SCHEME 4

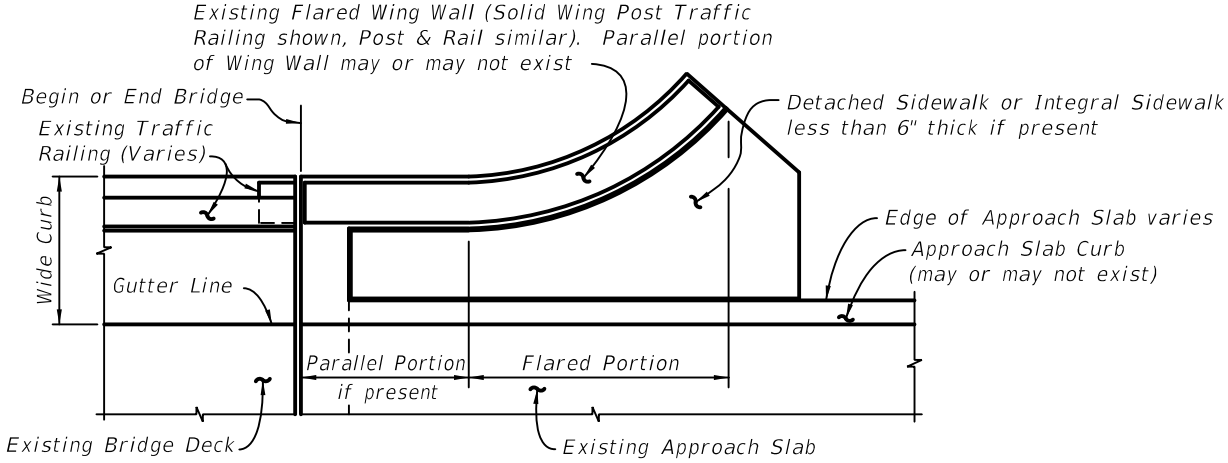

PARTIAL PLAN VIEW OF EXISTING BRIDGE WITH WIDE CURBS, FLARED WING WALLS AND APPROACH SLABS WITH DETACHED SIDEWALKS OR SIDEWALKS LESS THAN 6" THICK - USE INDEX NO. 482, SCHEME 5

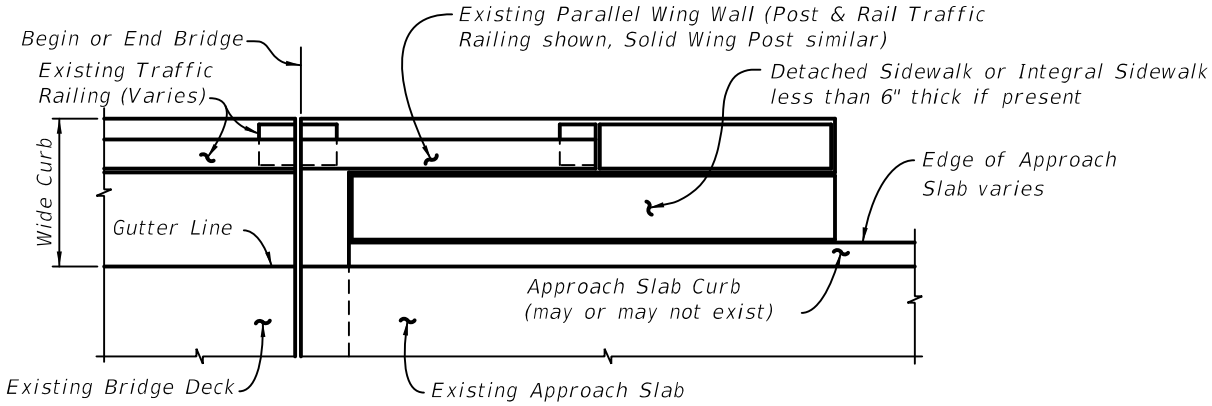

PARTIAL PLAN VIEW OF EXISTING BRIDGE WITH WIDE CURBS, PARALLEL WING WALLS AND APPROACH SLABS WITH DETACHED SIDEWALKS OR SIDEWALKS LESS THAN 6" THICK - USE INDEX NO. 482, SCHEME 5

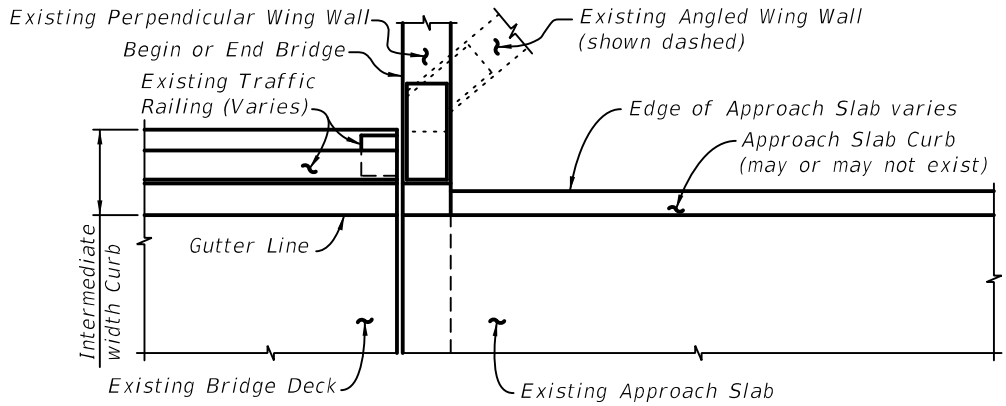

PARTIAL PLAN VIEW OF EXISTING BRIDGE WITH INTERMEDIATE WIDTH CURBS AND PERPENDICULAR OR ANGLED WING WALLS - USE INDEX NO. 483, SCHEME 1

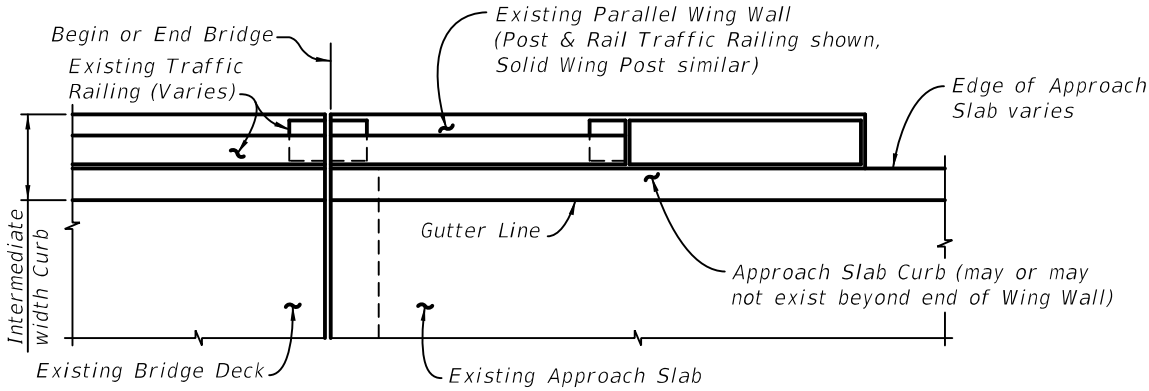

PARTIAL PLAN VIEW OF EXISTING BRIDGE WITH INTERMEDIATE WIDTH CURBS, PARALLEL WING WALLS AND PARALLEL INTEGRAL APPROACH SLAB CURBS - USE INDEX NO. 483, SCHEME 2

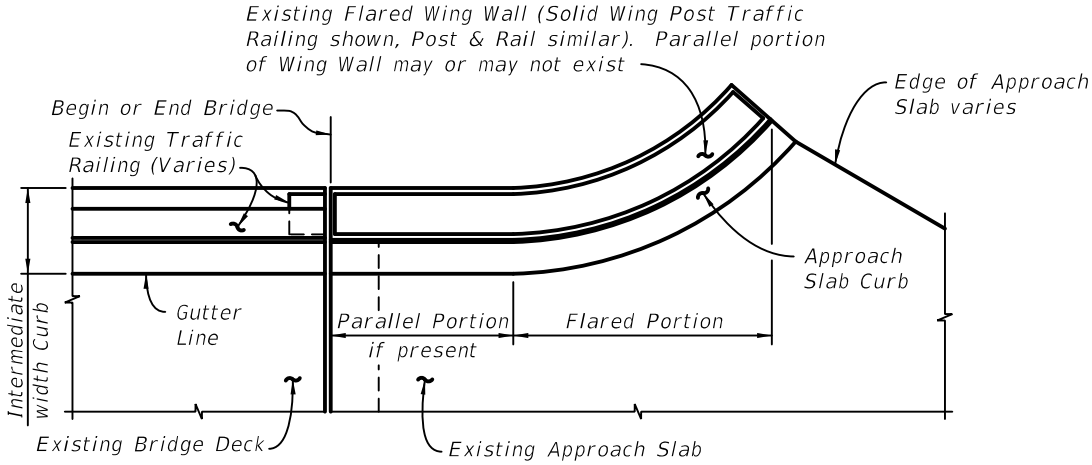

PARTIAL PLAN VIEW OF EXISTING BRIDGE WITH INTERMEDIATE WIDTH CURBS, FLARED WING WALLS AND FLARED INTEGRAL APPROACH SLAB CURBS - USE INDEX NO. 483, SCHEME 3

Plan Content Requirements

The appropriate ***Design Standards*** Index number and Scheme number shall be shown in the Roadway Plans for each bridge along with the limiting stations of the retrofit. Examples of notes containing the required information as they would appear on a Plan or Plan-Profile sheet are as follows:

> "Construct Traffic Railing (Vertical Face Retrofit), Index 48X, Scheme X, from Sta. XX+XX.XX (at or near Begin Bridge) to Sta. XX+XX.XX (at or near End Bridge)."

> "Construct Traffic Railing (Vertical Face Retrofit) Spread Footing Approach, Index 484, Scheme X, from Sta. XX+XX.XX (at beginning of Length of Advancement, or at or near End Bridge) to Sta. XX+XX.XX (at or near Begin Bridge, or end of Length of Advancement)."

For projects with multiple bridges, a tabular format may be used to convey the necessary information.

A separate Plan and Elevation sheet of the type used in Structures Plans is generally not required.

Payment

Item number	Item description	Unit Measure
521-5-8	Concrete Traffic Railing, Bridge, Retrofit-Vertical Face	LF
110-3-6*	Removal of Existing Structures	LF

* As required per the Design Assumptions and Limitations.

Index 519 Rumble Striping

Design Criteria

FDOT Plans Preparation Manual (PPM) Volume 1, Chapter 7

Design Assumptions and Limitations

Design Standards Index 519 is only applicable for projects with dense graded friction course. For projects with open graded friction course use ***Developmental Design Standards*** Index D519.

Rumble Striping is a specific type of audible & vibratory marking and the usage criteria is specified in the ***PPM***, Volume 1, Chapter 7.

Rumble strip grinding equipment is not designed for installing rumble strips on tapers and returns; therefore, they should not be installed in median opening returns, left turn lanes or right turn lanes as shown in the Figures below.

Plan Content Requirements

In the Signing & Pavement Marking Plans:

Label the Rumble Striping on the Plan sheets and show the limits of the striping following the examples shown in the Figures below.

Commentary: Since the drawings need to depict the center line pavement marking configuration, a visible line style for the continuous array rumble strip could not be used. Center Line markings for two lane roadways where the continuous array is used have a custom line style on a non-plotting level/layer for the purpose of calculating the rumble strip quantity. The ECSO has included the line style requirements and pay item information associated with the rumble striping for plans production in all software platforms.

Summarize quantities for each rumble striping component (i.e., ground-in rumble strip and thermoplastic pavement marking) separately on the Tabulation of Quantities Sheet. The additional application of paint required after grinding and the additional Temporary Type D retroreflective pavement markers are included in the final surface paint (pay item 710-90) and do not need to be calculated or paid for separately.

Payment

There is no pay item for "Rumble Striping"; therefore, the payment will be made separately for each rumble striping component (i.e., ground-in rumble strip and thermoplastic pavement marking). The rumble strips included for the rumble striping are to be included in the 0300 category with the pavement markings in Web Trns*port.

Item number	Item description	Unit Measure
546- 72- 52	Rumble Strips, Ground-In, 16" Center Line	GM
546- 72- 53	Rumble Strips, Ground-In, 8" Edge Line	GM
710-90	Painted Pavement Markings - Final Surface	LS
711- 1A-BCD	Thermoplastic Pavement Markings	GM

Figure 1 Typical Rural Two-Lane Intersection without Turn Lanes

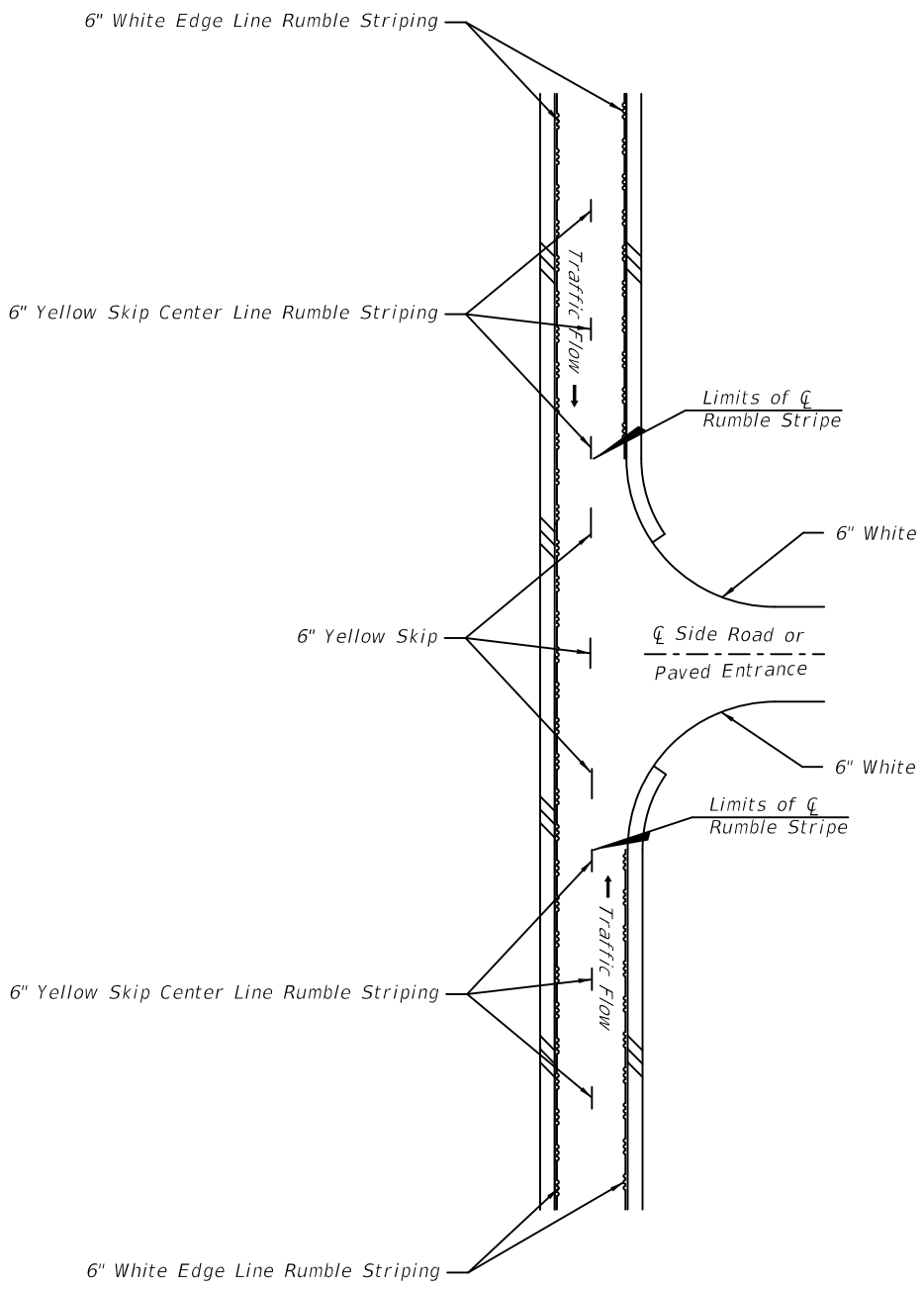

Figure 2 Typical Rural Two-Lane Intersection with Turn Lanes

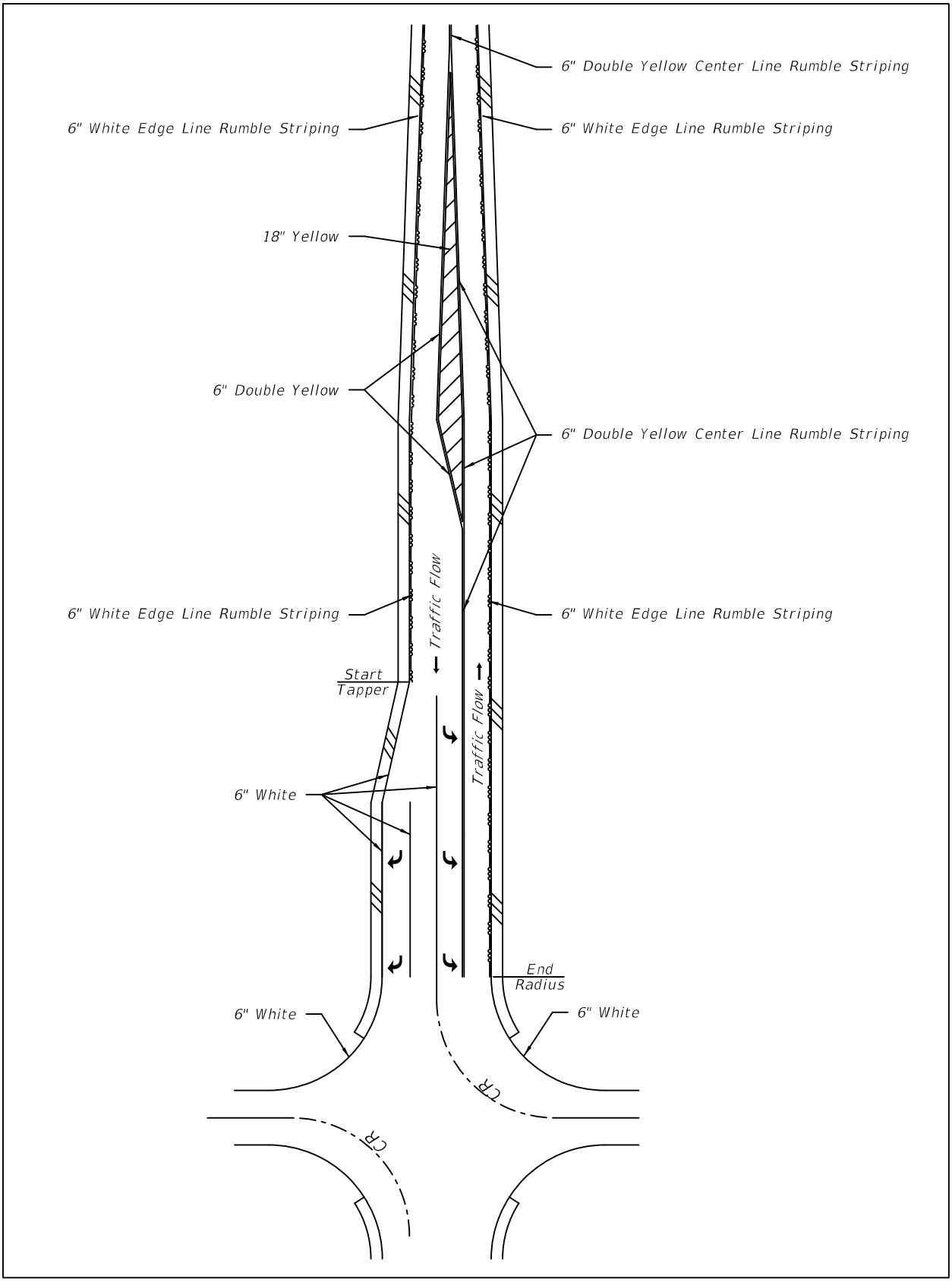

Figure 3 Typical Rural Multi-Lane Intersection (1 of 2)

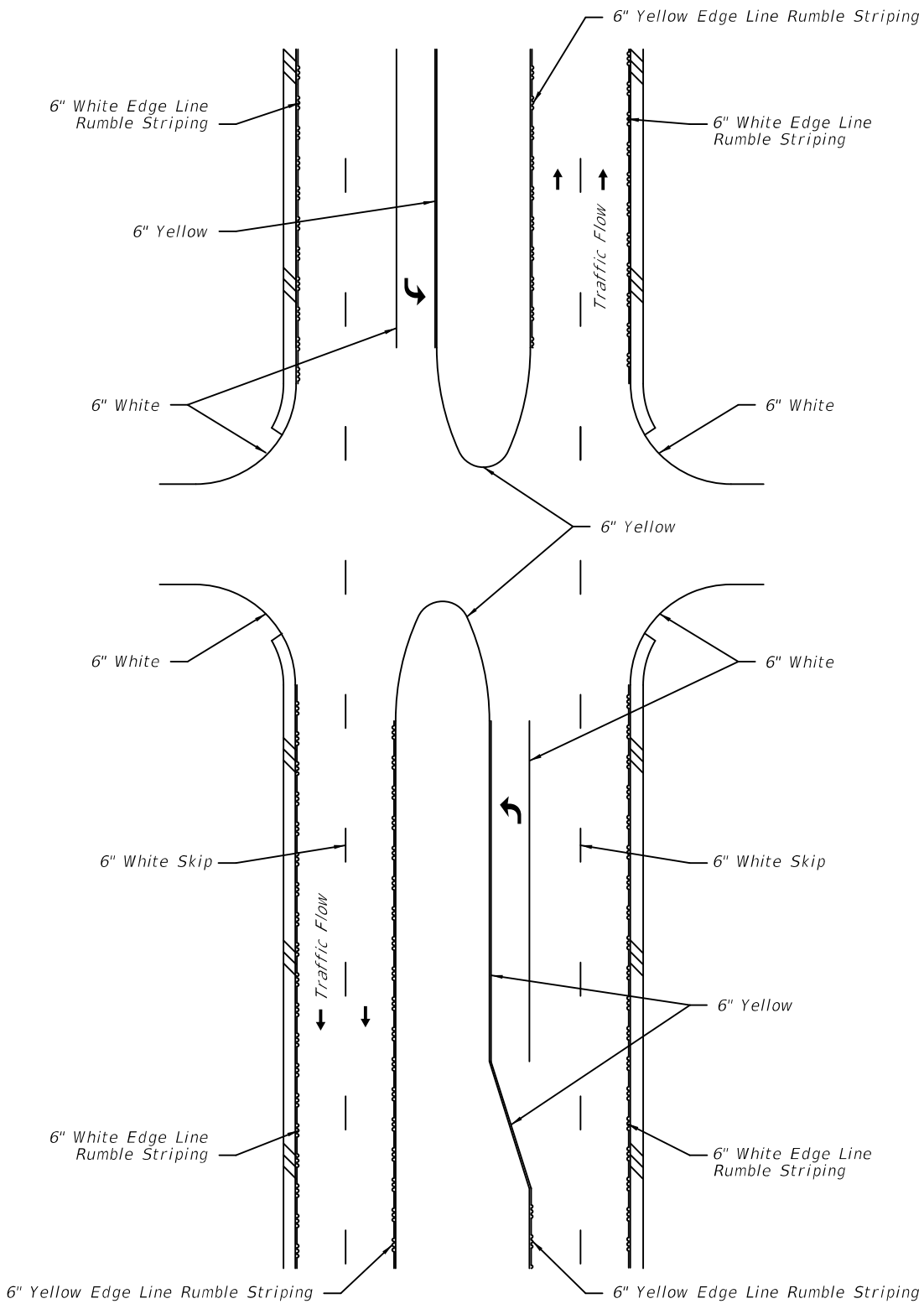

Figure 4 Typical Rural Multi-Lane Intersection (2 of 2)

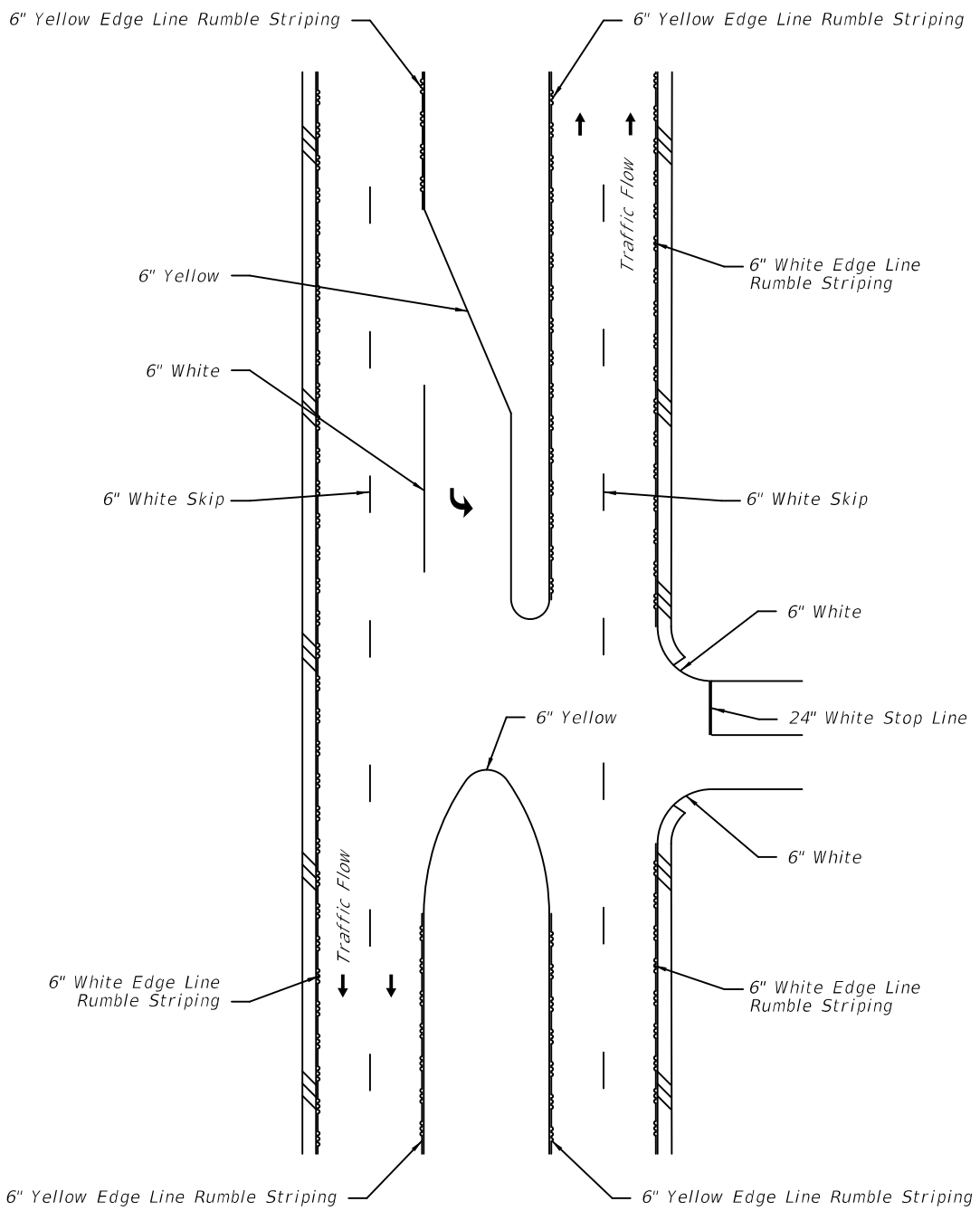

Figure 5 Typical Rural Multi-Lane Roadway

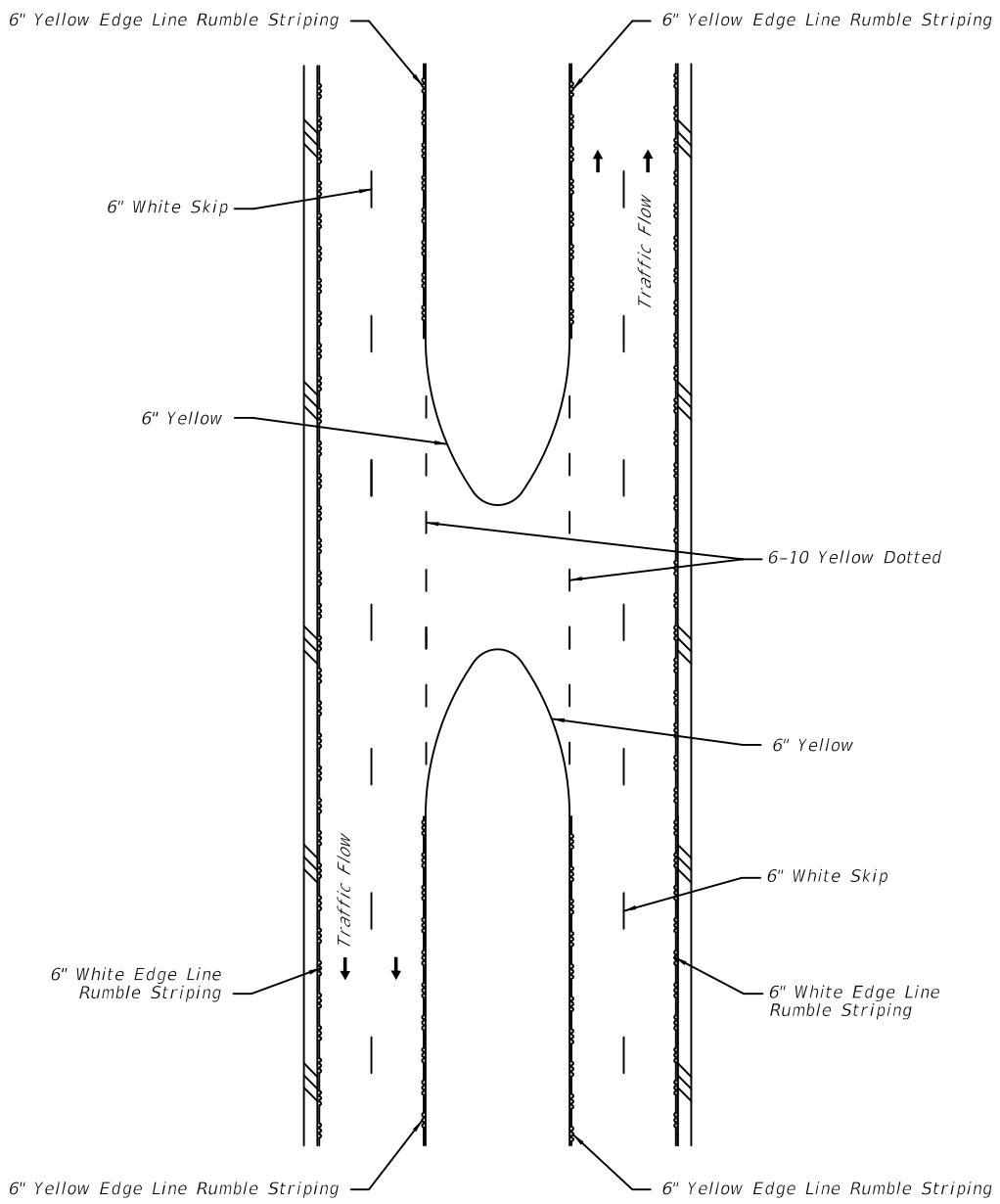

Index 521 Concrete Steps

Design Criteria

Florida Building Commission "***Florida Building Code***", 2004 Edition

Design Assumptions and Limitations

Do not use this Index for suspended (structural) steps or stairways.

Maximum of 12 risers permitted between level landing areas.

Use of Index 852, 862, 870, 880 or project specific pedestrian railings is required.

Plan Content Requirements

Show locations and lengths of steps in the plans. Consider maximum number of risers between landings, landing widths and tie-ins to adjacent sidewalks when establishing overall limits of steps. Coordinate profile of steps and landings with shapes of supporting embankments.

Show Index 852, 862, 870, 880 or project specific pedestrian railings. Label steps by name or Index number.

Payment

Item number	Item description	Unit Measure
400-0-13	Concrete Class NS, Concrete Steps	CY
415-1-6	Reinforcing Steel - Miscellaneous	LB

Index 810 Bridge Fencing (Vertical) (Rev. 11/16)

Design Criteria

NCHRP Report 350 Test Level 3 Criteria; ***AASHTO LRFD Bridge Design Specifications***; ***Structures Design Guidelines (SDG)***

Design Assumptions and Limitations

The Traffic Railing mounted version of this fence (back of railing mounted with tension wires) is based on a design that was successfully crash tested in accordance with the ***AASHTO Guide Specifications for Bridge Railings*** Performance Level 2 pickup test. Modifications have been made to improve the crashworthiness to ***NCHRP Report 350*** Test Level 3 Criteria. This fence can be used on Index 420, 422, 423, 424, 425 and 480 Series Traffic Railings, certain non-FDOT standard concrete traffic railings meeting the requirements of ***SDG*** 6.7 and on existing New Jersey and F-Shape Traffic Railings listed in the ***Instructions for Design Standards*** Index 402.

The Concrete Parapet mounted version of this fence (top of parapet mounted with horizontal rails) is not a crash tested design and cannot be used on traffic railings. This fence can be used on Concrete Parapets constructed in accordance with Index 820 in lieu of the bullet railing shown on Indexes 820 and 822.

Evaluate the expansion joint movements of the bridge. Expansion rails are required for concrete parapet installations at expansion joints where the total movement exceeds 1-inch. If the total movement at an individual expansion joint is 6-inches or less, the bridge fence will span the joint without using an expansion assembly. If the total movement at an individual expansion joint exceeds 6-inches, an Expansion Assembly must be installed at that location.

Use of the Concrete Parapet mounted version of this fence in lieu of Index 811 Bridge Fencing (Curved Top) or Index 812 Bridge Fencing (Enclosed) should be based on project and site specific requirements.

Plan Content Requirements

In the Structures and/or Roadway Plans:

Show and label, by name or Index number, the Bridge Fencing (Vertical) on the Plan and Elevation, Typical Section, Superstructure and Approach Slab sheets, Retaining Wall Control Drawings, and other sheets as required.

Show the limits of fencing in the plans if they are not from begin of approach slab at Begin Bridge to end of approach slab at End Bridge.

Show quantities for bridge fencing with quantities for Traffic Railings and/or Concrete Parapets.

Determine if bridge fencing requires grounding. If required, provide details in the superstructure sheets.

Provide locations for expansion joints requiring expansion rails or expansion assemblies in the superstructure layout sheets.

Designate the required finish in the General Notes, e.g., zinc or aluminum coated, or polyvinyl chloride (PVC) coated. If PVC coated fence is used, include the following notes in the General Notes:

1. A note specifying the color of the PVC coating for chain link fabric.
2. A note to paint the fence framework to match the color of the PVC chain link fabric.
3. A note for preparation of galvanized steel for painting.
4. A note to coat tension wire and fence fittings to match the color of the PVC chain link fabric.

Consideration for Approval of Alternative Technical Proposals

Alternate fencing systems may be considered for approval with concurrence from the District Structures Design Engineer. Fabricators must be listed in the ***Material Acceptance and Certification System (MAC)*** as an approved Metals Production Facility.

Design calculations meeting the wind load requirements for the project site in accordance with the ***SDG*** must be submitted for review and approval by the EOR. Technical Specifications with material and testing requirements should be submitted by the Contractor for approval prior to acceptance of any alternative technical proposal (*Contractor Savings Initiative* for Design-Bid-Build projects, or *Alternative Technical Concept* for Design Build/P3 projects).

Payment

Item number	Item description	Unit Measure
550-10-315	Fencing, Type R, 0 - 5.0', Vertical	LF
550-10-325	Fencing, Type R, 5.1 - 6.0', Vertical	LF
550-10-335	Fencing, Type R, 6.1 - 7.0', Vertical	LF

Index 811 Bridge Fencing (Curved Top) (Rev. 11/16)

Design Criteria

AASHTO LRFD Bridge Design Specifications; ***Structures Design Guidelines (SDG)***

Design Assumptions and Limitations

This fence is not a crash tested design and cannot be used on traffic railings. This fence can be used on Concrete Parapets constructed in accordance with Index 820 in lieu of the bullet railing shown on Indexes 820 and 822.

Evaluate the expansion joint movements of the bridge. Expansion rails are required for concrete parapet installations at expansion joints where the total movement exceeds 1-inch. If the total movement at an individual expansion joint is 6-inches or less, the bridge fence will span the joint without using an expansion assembly. If the total movement at an individual expansion joint exceeds 6-inches, an Expansion Assembly must be installed at that location.

Use of this fence in lieu of Index 810 Bridge Fencing (Vertical) or Index 812 Bridge Fencing (Enclosed) should be based on project and site specific requirements.

Plan Content Requirements

In the Structures and/or Roadway Plans:

Show and label, by name or Index number, the Bridge Fencing (Vertical) on the Plan and Elevation, Typical Section, Superstructure and Approach Slab sheets, Retaining Wall Control Drawings, and other sheets as required.

Show the limits of fencing in the plans if they are not from begin of approach slab at Begin Bridge to end of approach slab at End Bridge.

Show quantities for bridge fencing with quantities for Traffic Railings and/or Concrete Parapets.

Determine if bridge fencing requires grounding. If required, provide details in the superstructure sheets.

Provide locations for expansion joints requiring expansion rails or expansion assemblies in the superstructure layout sheets.

Designate the required finish in the General Notes, e.g., zinc or aluminum coated, or polyvinyl chloride (PVC) coated. If PVC coated fence is used, include the following notes in the General Notes:

1. A note specifying the color of the PVC coating for chain link fabric.
2. A note to paint the fence framework to match the color of the PVC chain link fabric.
3. A note for preparation of galvanized steel for painting.
4. A note to coat tension wire and fence fittings to match the color of the PVC chain link fabric.

Consideration for Approval of Alternative Technical Proposals

Alternate fencing systems may be considered for approval with concurrence from the District Structures Design Engineer. Fabricators must be listed in the ***Material Acceptance and Certification System (MAC)*** as an approved Metals Production Facility.

Design calculations meeting the wind load requirements for the project site in accordance with the ***SDG*** must be submitted for review and approval by the EOR. Technical Specifications with material and testing requirements should be submitted by the Contractor for approval prior to acceptance of any alternative technical proposal (*Contractor Savings Initiative* for Design-Bid-Build projects, or *Alternative Technical Concept* for Design Build/P3 projects).

Payment

Item number	Item description	Unit Measure
550-10-344	Fencing, Type R, 7.1 - 8.0’, W / Partial Enclosure	LF
550-10-354	Fencing, Type R, 8.1 - 10.0', W/ Partial Enclosure, Type R Only	LF

Index 812 Bridge Fencing (Enclosed) (Rev. 11/16)

Design Criteria

AASHTO LRFD Bridge Design Specifications; ***NCHRP Report 350*** Test Level 3 Criteria (portion of fence adjacent to traffic railing only); ***Structures Design Guidelines (SDG)***

Design Assumptions and Limitations

The Traffic Railing mounted side of this fence is based on a design that was successfully crash tested in accordance with the ***AASHTO Guide Specifications for Bridge Railings*** Performance Level 2 pickup test. Modifications have been made to improve the crashworthiness to ***NCHRP Report 350*** Test Level 3 Criteria.

This fence can be used on Index 820 Concrete Parapets, Indexes 410, 420, 422, 423, 424 and 425 Traffic Railings, certain non-FDOT standard concrete traffic railings meeting the requirements of ***SDG*** 6.7 and on existing New Jersey and F-Shape Traffic Railings listed in the ***Instructions for Design Standards*** Index 402.

Evaluate the expansion joint movements of the bridge. Expansion rails are required for concrete parapet installations at expansion joints where the total movement exceeds 1-inch. If the total movement at an individual expansion joint is 6-inches or less, the bridge fence will span the joint without using an expansion assembly. If the total movement at an individual expansion joint exceeds 6-inches, an Expansion Assembly must be installed at that location.

Use of this fence in lieu of Index 810 Bridge Fencing (Vertical) or Index 811 Bridge Fencing (Curved Top) should be based on project and site specific requirements.

Plan Content Requirements

In the Structures and/or Roadway Plans:

Show and label, by name or Index number, the Bridge Fencing (Enclosed) on the Plan and Elevation, Typical Section, Superstructure and Approach Slab sheets, Retaining Wall Control Drawings, and other sheets as required. Include cross references to ***Design Standards*** Index 820 and the traffic railing standard as appropriate.

Show the limits of fencing in the plans if they are not from begin of approach slab at Begin Bridge to end of approach slab at End Bridge.

Show quantities for bridge fencing with quantities for Traffic Railings and/or Concrete Parapets.

Determine if bridge fencing requires grounding. If required, provide details in the superstructure sheets.

Provide locations for expansion joints requiring expansion rails or expansion assemblies in the superstructure layout sheets.

Designate the required finish in the General Notes, e.g., zinc or aluminum coated, or polyvinyl chloride (PVC) coated. If PVC coated fence is used, include the following notes in the General Notes:

1. A note specifying the color of the PVC coating for chain link fabric.
2. A note to paint the fence framework to match the color of the PVC chain link fabric.
3. A note for preparation of galvanized steel for painting.
4. A note to coat tension wire and fence fittings to match the color of the PVC chain link fabric.

Consideration for Approval of Alternative Technical Proposals

Alternate fencing systems may be considered for approval with concurrence from the District Structures Design Engineer. Fabricators must be listed in the ***Material Acceptance and Certification System (MAC)*** as an approved Metals Production Facility.

Design calculations meeting the wind load requirements for the project site in accordance with the ***SDG*** must be submitted for review and approval by the EOR. Technical Specifications with material and testing requirements should be submitted by the Contractor for approval prior to acceptance of any alternative technical proposal (*Contractor Savings Initiative* for Design-Bid-Build projects, or *Alternative Technical Concept* for Design Build/P3 projects).

Payment

Item number	Item description	Unit Measure
550-10-343	Fencing, Type R, 7.1 - 8.0’, With Full Enclosure	LF
550-10-353	Fencing, Type R, 8.1 - 10.0', With Full Enclosure	LF

Index 820 27" Concrete Parapet with Pedestrian/Bicycle Bullet Railing

Design Criteria

AASHTO LRFD Bridge Design Specifications; ***Structures Design Guidelines (SDG)***

Design Assumptions and Limitations

The standard height railing is the Pedestrian / Bicycle Railing (42" height). The Special Height Bicycle Railing (48" height) should only be used where warranted by ***AASHTO LRFD*** C13.9.2.

Index 820 cannot be used as a traffic railing. A crashworthy traffic railing is required between Index 820 and adjacent traffic lanes.

Use this standard in conjunction with Indexes 420, 424, or 425 and 810, 811, 812 or 822.

Plan Content Requirements

In the Structures and / or Roadway Plans:

In the Materials Note on the General Notes Sheet, specify the concrete class in accordance with the superstructure or retaining wall environment classification. See ***SDG*** 1.4.

Show and label, by name or Index number, the Pedestrian / Bicycle Bullet Railing on the Plan and Elevation, Typical Section, Superstructure, Approach Slab and Finish Grade Elevations Cross Section sheets, Retaining Wall Control Drawings, and other sheets as required. Specify the type of railing required, e.g., Pedestrian / Bicycle Bullet Railing or Special Height Bicycle Bullet Railing. Include cross references to ***Design Standards*** Index 810, 811, 812 or 822 as appropriate.

All concrete required to construct the parapet and Bars 4P and 4S are included in the Estimated Concrete Parapet Quantities. Do not include parapet concrete in the estimated concrete quantities, or Bars 4P and 4S in the reinforcing bar lists and estimated reinforcing steel quantities for supporting bridge decks, approach slabs or retaining walls.

Payment

Item number	Item description	Unit Measure
521-6-11	27" Concrete Parapet, Pedestrian/Bicycle	LF
515-4-2	Aluminum Bullet Railings, Double Rail	LF

Index 821 Aluminum Pedestrian/Bicycle Bullet Railing for Traffic Railing (32" F Shape)

Design Criteria

AASHTO LRFD Bridge Design Specifications; ***Structures Design Guidelines (SDG)***

Design Assumptions and Limitations

This railing is intended for use when a Bicycle Lane is required and a raised pedestrian sidewalk is not provided.

The standard height railing is the Pedestrian / Bicycle Railing. The Special Height Bicycle Railing should only be used where warranted by ***AASHTO LRFD*** C13.9.2.

Use this standard in conjunction with Indexes 420 and 822.

Plan Content Requirements

Show and label, by name or Index number, the Aluminum Pedestrian / Bicycle Bullet Railing on the Plan and Elevation, Typical Section, Superstructure, Approach Slab and Finish Grade Elevations Cross Section sheets, Retaining Wall Control Drawings, and other sheets as required. Specify the type of railing required, e.g., Pedestrian / Bicycle Railing or Special Height Bicycle Railing. Include cross references to ***Design Standards*** Indexes 420 and 822 as appropriate.

Payment

Item number	Item description	Unit Measure
515-4-1	Aluminum Bullet Railings, Single Rail	LF
515-4-2	Aluminum Bullet Railings, Double Rail	LF

Index 822 Aluminum Pedestrian/Bicycle Bullet Railing Details

Design Criteria

AASHTO LRFD Bridge Design Specifications, 6th Edition; ***Structures Design Guidelines (SDG)***

Design Assumptions and Limitations

The standard height railing is the Pedestrian / Bicycle Railing. The Special Height Bicycle Railing should only be used where warranted by ***AASHTO LRFD*** C13.9.2.

Use this standard in conjunction with Indexes 420, 423, 820 and/or 821.

Plan Content Requirements

Show and label, by name or Index number, the Aluminum Pedestrian / Bicycle Bullet Railing on the Plan and Elevation, Typical Section, Superstructure, Approach Slab and Finish Grade Elevations Cross Section sheets, Retaining Wall Control Drawings, and other sheets as required. Specify the type of railing required, e.g., Pedestrian / Bicycle Railing or Special Height Bicycle Railing. Include cross references to ***Design Standards*** Indexes 420, 423, 820 and 821 as appropriate.

Payment

Item number	Item description	Unit Measure
515-4-1	Aluminum Bullet Railings, Single Rail	LF
515-4-2	Aluminum Bullet Railings, Double Rail	LF

Index 825 42" Concrete Pedestrian/Bicycle Railing

Design Criteria

AASHTO LRFD Bridge Design Specifications, 6th Edition; ***Structures Design Guidelines (SDG)***

Design Assumptions and Limitations

Index 825 cannot be used as a traffic railing. A crashworthy traffic railing is required between this railing and adjacent traffic lanes.

Use this standard in conjunction with Indexes 420, 424, or 425.

To preserve the structural integrity, no more than two 2" diameter conduits and associated Embedded Junction Boxes, as shown on ***Design Standards*** Index 21210, may be installed within this railing.

This railing is intended for locations where theft of the aluminum components on Index 820 is a warranted concern as determined by the District Maintenance Office.

Plan Content Requirements

In the Structures and/or Roadway Plans:

In the Materials Note on the General Notes Sheet, specify the concrete class in accordance with the superstructure or retaining wall environment classification. See ***SDG*** 1.4.

In the Applied Finish Coating Note on the General Notes, specify any special textured surface requirements and/or colors for the Class 5 Finish Coating. See ***Design Standards*** Index 5200 for examples of textured surface options. Use only those with depth or amplitude less than or equal to ½” to maintain 2” cover for reinforcement.

Show and label the 42" Concrete Pedestrian/Bicycle Railing on the Plan and Elevation, Typical Section, Superstructure, Approach Slab and Finish Grade Elevations Cross Section sheets, Retaining Wall Control Drawings, and other sheets as required.

All concrete required to construct the railing and Bars 3R and 4S are included in the Estimated Concrete Railing Quantities. Do not include railing concrete in the estimated concrete quantities, or Bars 3R and 4S in the reinforcing bar lists and estimated reinforcing steel quantities for supporting bridge decks, approach slabs or retaining walls.

Payment

Item number	Item description	Unit Measure
521-6-12	42" Concrete Parapet, Pedestrian/Bicycle	LF
521-6-32	42" Concrete Parapet, Pedestrian/Bicycle, Retaining Wall Mounted with Sidewalk	LF

Index 851 Bridge Pedestrian/Bicycle Railing (Steel)

Design Criteria

See Instructions for ***Design Standards*** Index 852.

Design Assumptions and Limitations

Bridge Pedestrian/Bicycle Railing is limited to use on bridges with expansion joint thermal movements not exceeding 5". Scheme 3 is limited to bridge retrofit applications where additional sidewalk width is required.

See Instructions for ***Design Standards*** Index 852 for additional information.

Plan Content Requirements

In the Structures and/or Roadway Plans:

Provide railing layout Control Drawings to show post spacing, curb joint, V-groove, deck joint, expansion joint locations and Scheme number. Label railing by name or Index number.

For existing bridge retrofits special end treatment details may be required for perpendicular or flared wingwalls at Begin and End Bridge. Provide existing railing removal details when required.

When either Index 851 or 861 are acceptable, include cross references to both indexes and use Pay Item 515-2-1BB as appropriate.

Payment

Item number	Item description	Unit Measure
515-2-1BB	Pedestrian / Bicycle Railing, Non Specified, 42" (Type__)	LF
515-2-1BB	Pedestrian / Bicycle Railing, Non Specified, 48" (Type__)	LF
515-2-2BB	Pedestrian / Bicycle Railing, Steel Only, 42" (Type__)	LF
515-2-2BB	Pedestrian / Bicycle Railing, Steel Only, 48" (Type__)	LF

Include concrete and reinforcing steel quantities for the concrete curb (Scheme 2) in the bridge deck plan quantity pay items.

Index 852 Steel Pedestrian/Bicycle Railing (Rev. 11/16)

Design Criteria

Structures Design Guidelines (SDG 6.8)

Design Assumptions and Limitations

This railing is not applicable for shielding drop-off hazards for motor vehicle traffic. This railing is applicable for cases where a pedestrian or bicyclist drop-off hazard exceeds 5'-0" or when a drop-off hazard is less than 5'-0" and is required by design or permit stipulations. Refer to ***PPM*** Vol. 1, Chapters 4 & 8, for the definition of vehicular, pedestrian and bicyclist "drop-off hazards".

Indexes 852 and 862 are similar in form and function. Select which of these railings to use at a given site based on District preferences, aesthetic or finish color requirements, corrosion concerns, potential theft issues, fabrication issues, weight of railing and any other project specific requirements. In some cases, both of these railings are acceptable for use and it is left to the contractor to select by the use of Pay Item 515-2-1BB.

See Index 851 for special requirements and modifications for use on bridges.

A handrail is required where there are 3 or more steps and on ramps with a grade steeper than 5% to conform to the requirements of the Americans with Disabilities Act (ADA).

Expansion joints shall be spaced at a maximum 40'-0" (differs from Index 862). Railing must be continuous across a minimum of two posts.

For the railing anchorage to provide stability against overturning, the concrete foundation (sidewalk, retaining wall, curb, etc.) must meet or exceed the requirements in this Standard.

The following definitions apply to the use of this Standard; including Custom Infill Panels:

4" Sphere Rule - Clear openings of the railing below 42" height shall reject the passage of a 4" diameter sphere and clear openings above 42" height shall reject the passage of an 8" diameter sphere.

6" Sphere Rule - Clear openings of the railing below 27" height shall reject the passage of a 6" diameter sphere and clear openings above 27" height shall reject the passage of an 8" diameter sphere.

Refer to the SDG for locations where the 4" Sphere rule is applicable. Providing adequate sight distance always takes priority over the 4" Sphere Rule.

Aesthetics play a crucial role in the determination of which railing infill type should be specified for a particular project. Alternate Infill Panel designs within the Design Standard, include some that meet the 6" Sphere Rule and others that meet the 4" Sphere Rule. Custom Infill Panels must be designed to meet the Design Criteria live load, and the applicable 4" or 6" Sphere Rule. When designing Infill Panels, aesthetics is important; however, line of sight and safety issues must be a priority.

Typically the clear space between the top and intermediate horizontal rails provides for adequate sight distances; however, for railing installations adjacent to sloped intersections, the infill area between the intermediate and bottom horizontal rails may still adversely affect the sight distance. Of the standard infill alternatives that meet the 4" Sphere Rule, the standard "Type 2 - Chain-Link" infill alternative creates the least obstruction to sight distance through the infill areas.

When a colored coating is desired and the additional cost is justified or reimbursed by the requesting local agency, then specify a coating in accordance with FDOT Standard Specifications for Road and Bridge Construction, Section 649-4. See ***PPM***, Volume 1, Section 8.8 for responsibilities of Local Maintaining Agencies.

Plan Content Requirements

In the Structures and/or Roadway Plans:

Show Pedestrian Railings on sidewalks and walls as required. Designate locations where handrails are required. Label railing by name or Index number.

When either Index 852 or 862 are acceptable, include cross references to both indexes and use Pay Item 515-2-1BB.

When the 4" Sphere Rule must be met, modifications to the picket spacing (Type 1 & 3 Infill Panels) and intermediate railing height will be required in the Plans. Modify the Design Standards in accordance with Method 1, Method 2 or Method 3 as defined in the Terms Of Use for the Borderless DGNs provided in the Design Standards eBooklet.

All Custom Infill Panels shall be fully detailed in the contract plans. A Custom Type Infill Panel Cell (00852-CTIP.cel) is available through the Structures CADD bar menu.

Prepare project specific Infill Panel details when required using the Pedestrian/Bicycle Railing Custom Infill Panel CADD cell and include the cell(s) in the plans. Designate each individual project specific Infill Panel with a unique name for identification and cross reference purposes.

Complete the following Data Tables and include them in the plans. See Introduction I.3 for more information regarding use of Data Tables.

In the HEIGHT column of the Data Table, enter either "42" for standard Pedestrian/ Bicycle Railing, "48" for Special Height Bicycle Railing, or required height where modified railing height is required.

In the STYLE column of the Data Table, enter either "Type X" (where X = 1 thru 5 for the standard Infill Panel options) or "Custom" where custom Infill Panels are fully detailed in the plans.

STEEL PEDESTRIAN/BICYCLE RAILING DATA TABLES

PROJECT REQUIREMENTS					Table Date 01-01-11
Station to Station (Lt. or Rt.)	Height (in.)	Style Type (1)	Required: (Yes/No)		
			Bottle Guard	Colored Coatings (2)	Infill Panel to Reject Passage of 4" Sphere (Special conditions only)

(1) For "CUSTOM" Style Types, see plans for in-fill panel details.
(2) The color shall be per Federal Color Chart, Federal Standard No. 595B, Table _____, Color ____.

NOTES:
1. Work this Data Table with Index No. 852.

STEEL PEDESTRIAN/BICYCLE RAILING CUSTOM TYPE INFILL PANEL DETAILS

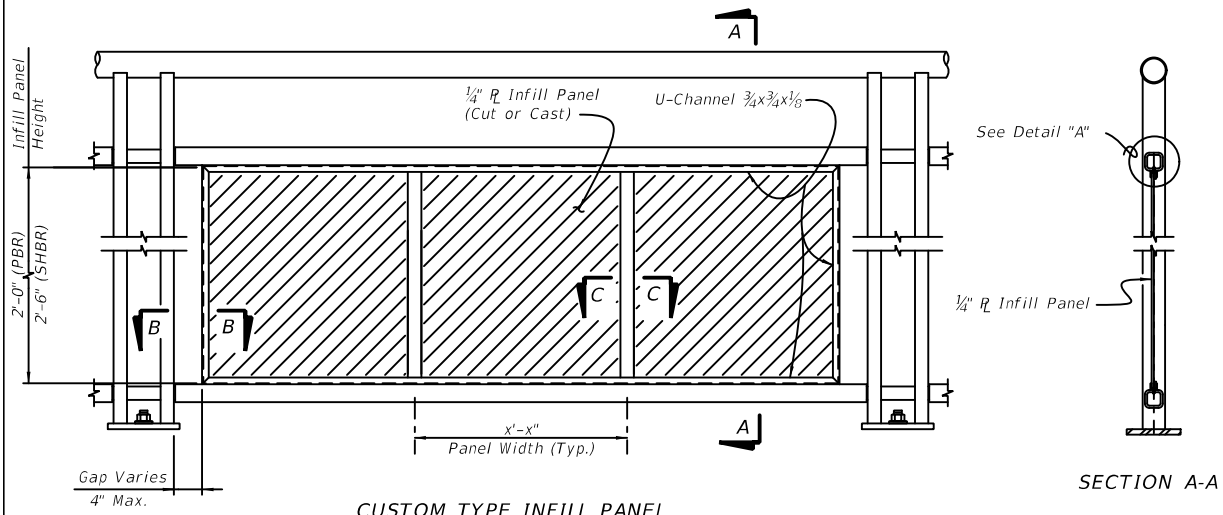

CUSTOM TYPE INFILL PANEL

SECTION A-A

Notes:
PBR = 42" Pedestrian/Bicycle Railing
SHBR = 48" Special Height Bicycle Railing

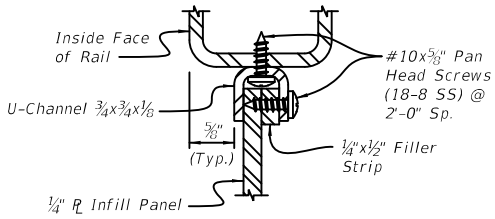

DETAIL "A"
PANEL/RAIL CONNECTION
(Top Shown, Bottom Similar)

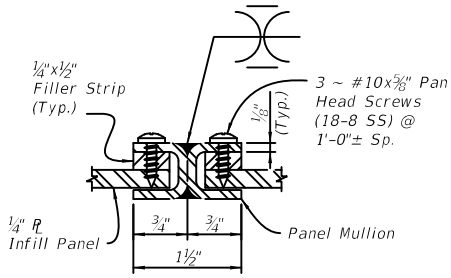

SECTION C-C
PANEL/SPLICE CONNECTION

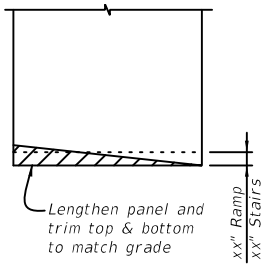

PANEL ADJUSTMENT FOR RAILINGS
ON GRADES STEEPER THAN 5%

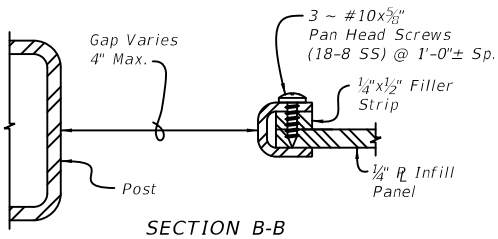

SECTION B-B
PANEL END CAP

Payment

Item number	Item description	Unit Measure
515-2-1BB	Pedestrian / Bicycle Railing, Non Specified, 42" (Type___)	LF
515-2-1BB	Pedestrian / Bicycle Railing, Non Specified, 48" (Type___)	LF
515-2-2BB	Pedestrian / Bicycle Railing, Steel Only, 42" (Type___)	LF
515-2-2BB	Pedestrian / Bicycle Railing, Steel Only, 48" (Type___)	LF

Index 861 Bridge Pedestrian/Bicycle Railing (Aluminum)

Design Criteria

See Instructions for ***Design Standards*** Index 862.

Design Assumptions and Limitations

Bridge Pedestrian/Bicycle Railing is limited to use on bridges with expansion joint thermal movements not exceeding 5". Scheme 3 is limited to bridge retrofit applications where additional sidewalk width is required.

See Instructions for ***Design Standards*** Index 862 for additional information.

Plan Content Requirements

In the Structures and/or Roadway Plans:

Provide railing layout Control Drawings in the Plans to show post spacing, curb joint, V-groove, deck joint, expansion joint locations and Scheme number. Label railing by name or Index number.

For existing bridge retrofits special end treatment details may be required for perpendicular or flared wingwalls at Begin and End Bridge. Provide existing railing removal details when required.

When either Index 851 or 861 are acceptable, include cross references to both indexes and use Pay Item 515-2-1BB as appropriate.

Payment

Item number	Item description	Unit Measure
515-2-1BB	Pedestrian / Bicycle Railing, Non Specified, 42" (Type __)	LF
515-2-1BB	Pedestrian / Bicycle Railing, Non Specified, 48" (Type __)	LF
515-2-3BB	Pedestrian / Bicycle Railing, Aluminum Only, 42" (Type __)	LF
515-2-3BB	Pedestrian / Bicycle Railing, Aluminum Only, 48" (Type __)	LF

Index 862 Aluminum Pedestrian/Bicycle Railing (Rev. 11/16)

Design Criteria

Structures Design Guidelines (SDG 6.8)

Design Assumptions and Limitations

This railing is not applicable for shielding drop-off hazards for motor vehicle traffic. This railing is applicable for cases where a pedestrian or bicyclist drop-off hazard exceeds 5'-0" or when a drop-off hazard is less than 5'-0" and is required by design or permit stipulations. Refer to ***PPM*** Vol. 1, Chapters 4 & 8, for the definition of vehicular, pedestrian and bicyclist "drop-off hazards".

Indexes 852 and 862 are similar in form and function. Select which of these railings to use at a given site based on District preferences, aesthetic or finish color requirements, corrosion concerns, theft potential issues, fabrication issues, weight of railing and any other project specific requirements. In some cases, both of these railings are acceptable for use and the selection of which to provide is left to the contractor by the use of Pay Item 515-2-1BB.

See Index 861 for special requirements and modifications for use on bridges.

A handrail is required where there are 3 or more steps and on ramps with a grade steeper than 5% to conform to the requirements of the Americans with Disabilities Act (ADA).

Expansion joints shall be spaced at a maximum 35'-0" (differs from Index 852). Railing must be continuous across a minimum of two posts.

For the railing anchorage to provides stability against overturning, the concrete foundation (sidewalk, retaining wall, curb, etc.) must meet or exceed the requirements in this Standard

For the purpose of these instructions, the following definitions shall apply:

4" Sphere Rule - Clear openings of the railing below 42" height shall reject the passage of a 4" diameter sphere and clear openings above 42" height shall reject the passage of an 8" diameter sphere.

6" Sphere Rule - Clear openings of the railing below 27" height shall reject the passage of a 6" diameter sphere and clear openings above 27" height shall reject the passage of an 8" diameter sphere.

Refer to the SDG for locations where the 4" Sphere rule is applicable. Providing adequate sight distance always takes priority over the 4" Sphere Rule.

Aesthetics play a crucial role in the determination of which railing infill type should be specified for a particular project. Alternate Infill Panel designs within the Design Standard, include those that meet the 6" Sphere Rule and others that meet the 4" Sphere Rule. Custom Infill Panels must be designed to meet the Design Criteria live load, and the applicable 4" or 6" Sphere Rule. When designing Infill Panels, aesthetics is important; however, line of sight and safety issues must be a priority.

Typically the clear space between the top and intermediate horizontal rails provides for adequate sight distances, however, for railing installations adjacent to sloped intersections, the infill area between the intermediate and bottom horizontal rails may still adversely affect the sight distance. Of the standard infill alternatives that meet the 4" Sphere Rule, the standard "Type 2 - Chain-Link" infill alternative creates the least obstruction to sight distance through the infill areas.

When a colored coating is desired and the additional cost is justified or reimbursed by the requesting local agency, then specify a coating complying with AAMA 2605, "Performance Requirements and Test Procedures for Superior Performing Organic Coatings on Aluminum Extrusions and Panels", (American Architectural Manufacturers Association, 2011) except that only fluoropolymer based powders are permitted. See ***PPM***, Volume 1, Section 8.8 for responsibilities of Local Maintaining Agencies.

Plan Content Requirements

In the Structures and/or Roadway Plans:

Show Pedestrian Railings on sidewalks and walls as required. Designate locations where handrails are required. Label railing by name or Index number.

When either Index 852 or 862 are acceptable, include cross references to both indexes and use Pay Item 515-2-1BB.

When the 4" Sphere Rule must be met, modifications to the picket spacing (Type 1 & 3 Infill Panels) and intermediate railing height will be required in the Plans. Modify the Design Standards in accordance with Method 1, Method 2 or Method 3 as defined in the Terms Of Use for the Borderless DGNs provided in the Design Standards eBooklet.

Prepare project specific Infill Panel details when required using the Pedestrian/Bicycle Railing Custom Infill Panel CADD cell and include them in the plans. Designate each individual project specific Infill Panel with a unique name for identification and cross reference purposes.

All custom Infill Panels shall be fully detailed in the contract plans. A Custom Type Infill Panel Cell (00862-CTIP.cel) as shown below is available through the Structures CADD bar menu.

Complete the following Data Tables and include them in the plans. See Introduction I.3 for more information regarding use of Data Tables.

In the HEIGHT column of the Data Table, enter either "42" for standard Pedestrian/Bicycle Railing, "48" for Special Height Bicycle Railing, or required height where modified railing height is required.

In the STYLE column of the Data Table, enter either "Type X" (where X = 1 thru 5 for the standard Infill Panel options) or "Custom" where custom Infill Panels are fully detailed in the plans.

ALUMINUM PEDESTRIAN/BICYCLE RAILING DATA TABLES

PROJECT REQUIREMENTS					Table Date 01-01-11
Station to Station (Lt. or Rt.)	Height (in.)	Style Type (1)	Required: (Yes/No)		
			Bottle Guard	Colored Coatings (2)	Infill Panel to Reject Passage of 4" Sphere (Special conditions only)

(1) For "CUSTOM" Style Types, see plans for in-fill panel details.
(2) The color shall be per Federal Color Chart, Federal Standard No. 595B, Table _____, Color ____.

NOTES:
1. Work this Data Table with Index No. 862.

ALUMINUM PEDESTRIAN/BICYCLE RAILING CUSTOM TYPE INFILL PANEL DETAILS

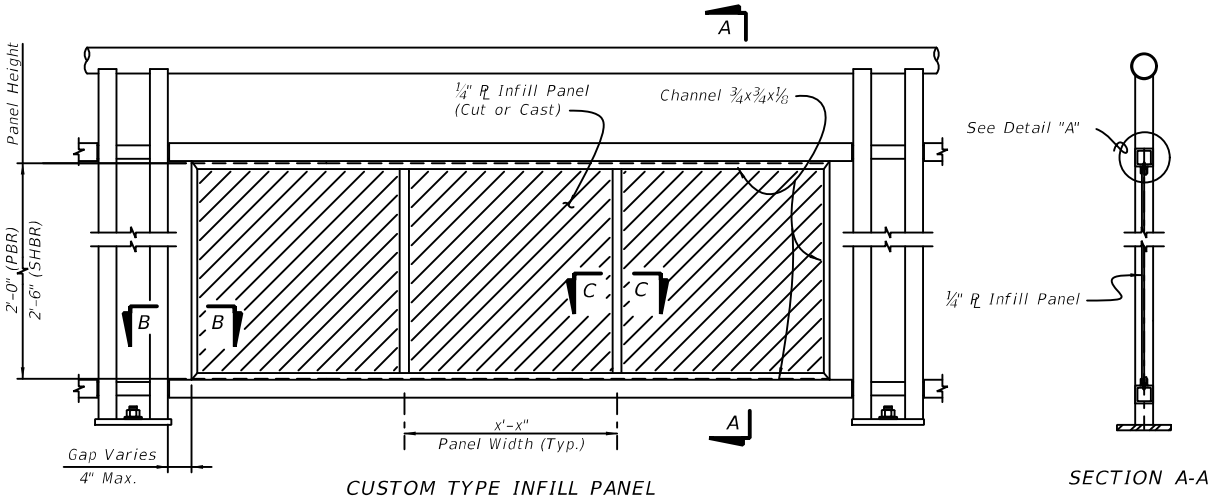

CUSTOM TYPE INFILL PANEL

SECTION A-A

Notes:
PBR = 42" Pedestrian/Bicycle Railing
SHBR = 48" Special Height Bicycle Railing

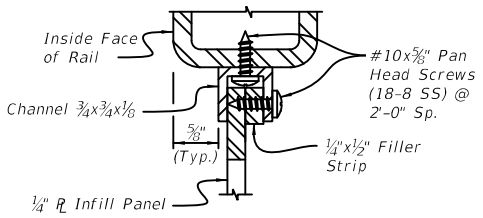

DETAIL "4A"
PANEL/RAIL CONNECTION
(Top Shown, Bottom Similar)

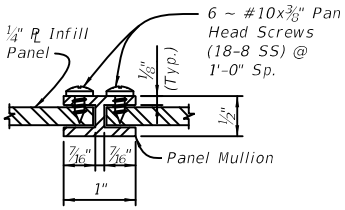

SECTION C-C
PANEL/SPLICE CONNECTION

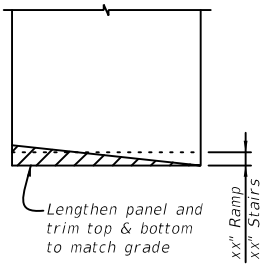

PANEL ADJUSTMENT FOR RAILINGS
ON GRADES STEEPER THAN 5%

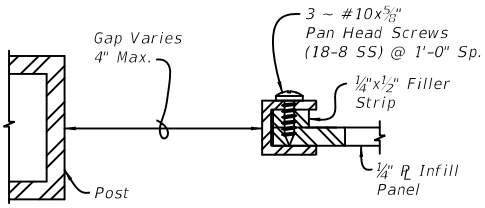

SECTION B-B
PANEL END CAP

Payment

Item number	Item description	Unit Measure
515-2-1BB	Pedestrian / Bicycle Railing, Non Specified, 42" (Type__)	LF
515-2-1BB	Pedestrian / Bicycle Railing, Non Specified, 48" (Type__)	LF
515-2-3BB	Pedestrian / Bicycle Railing, Aluminum Only, 42" (Type__)	LF
515-2-3BB	Pedestrian / Bicycle Railing, Aluminum Only, 48" (Type__)	LF

Index 870 Aluminum Pipe Guiderail

Design Criteria

ADA Accessibility Guidelines July 2004 as adopted with amendments by the USDOT under 49 CFR Part 37

Design Assumptions and Limitations

This Guiderail was tested by the FDOT Structural Research Center and found to resist an equivalent Service Loading of 50 lbs./ft. acting simultaneously in the transverse and vertical direction when applied at the height of the Top Rail.

This Index is not approved for use on bridges. This railing is not applicable for shielding drop-off hazards for vehicular traffic. This railing is applicable for all cases where Florida Building Code permit is not required and pedestrian or bicyclist drop-off hazards do not exceed 5’-0”. Refer to ***PPM***, Volume 1, Chapters 4 & 8, for the definition of vehicular, pedestrian and bicyclist "drop-off hazards". This railing is also applicable for select uses on sidewalks within service areas and similar locations or maintenance areas where the drop off exceeds 5’-0”.

Adequate foundation support for anchorage and stability against overturning must be provided. Design a site specific railing for unusual site conditions.

Indexes 870 and 880 are similar in form and function. Select which of these railings to use at a given site based on District preferences, aesthetic or finish color requirements, corrosion concerns, theft potential issues, fabrication issues, weight of railing and any other project specific requirements.

Plan Content Requirements

In the Structures and/or Roadway Plans:

Show Pipe Guiderail on sidewalks and walls as required. Designate locations where guiderails are required. Label guiderail by name or Index number.

Payment

Item number	Item description	Unit Measure
515-1-2	Pipe Handrail - Guiderail, Aluminum	LF

Index 880 Steel Pipe Guiderail

Design Criteria

ADA Accessibility Guidelines July 2004 as adopted with amendments by the USDOT under 49 CFR Part 37

Design Assumptions and Limitations

This Guiderail resists an equivalent Service Loading of 50 lbs./ft. acting simultaneously in the transverse and vertical direction when applied at the height of the Top Rail.

This Index is not approved for use on bridges. This railing is not applicable for shielding drop-off hazards for vehicular traffic. This railing is applicable for all cases where Florida Building Code permit is not required and pedestrian or bicyclist drop-off hazards do not exceed 5’-0”. Refer to ***PPM***, Volume 1, Chapters 4 & 8, for the definition of vehicular, pedestrian and bicyclist "drop-off hazards". This railing is also applicable for select uses on sidewalks within service areas and similar locations or maintenance areas where the drop off exceeds 5’-0”.

Adequate foundation support for anchorage and stability against overturning must be provided. Design a site specific railing for unusual site conditions.

Indexes 870 and 880 are similar in form and function. Select which of these railings to use at a given site based on District preferences, aesthetic or finish color requirements, corrosion concerns, theft potential issues, fabrication issues, weight of railing and any other project specific requirements.

Plan Content Requirements

In the Structures and/or Roadway Plans:

Show Pipe Guiderail on sidewalks and walls as required. Designate locations where guiderails are required. Label guiderail by name or Index number.

Payment

Item number	Item description	Unit Measure
515-1-1	Pipe Handrail - Guiderail, Steel	LF

Index 5200 Precast Noise Walls (Rev. 11/16)

Design Criteria

AASHTO LRFD Bridge Design Specifications; ***Structures Design Guidelines (SDG)***; ***Structures Detailing Manual (SDM)***; ***Soils and Foundations Handbook***

Designs have been revised and are based on the updated AASHTO ***LRFD*** wind loads adopted in the 2017 ***Structures Manual***.

Design Assumptions and Limitations

See ***SDG*** 3.16 for structural design criteria.

This Design Standard is not designed for vehicle impact loads. If noise walls cannot be placed outside the clear zone or at required set back distances behind traffic railings or guardrail, use Index 5210 and/or 5211.

General Design Assumptions:

- Wall height is the nominal height of the wall above finished grade. Wall heights range from 12' to 22' in 1'-0" increments with posts spaced at 10' and 20' nominal centers.
- Wall Panel segments are limited to a 12'-0" maximum height and 20' maximum length.
- Wall Panels are the same for all wind zones and total panel height is wall height plus 1 foot.
- Posts are designed and detailed to resist wind pressures based on requirements of ***SDG*** 2.4 and ***SDG*** 3.16. Velocity Pressure Exposure Coefficient (K_Z) is calculated to the centroid of each foot of wall height above 15'-0" (k_Z> 0.85).
- Elevation at finish grade is the same as the surrounding terrain.
- Foundations depths are calculated using Broms method for overturning. Soil boring characteristics averaged over a depth of 8 shaft diameters may be assumed per ***NCHRP Report 343*** (pg. 198).
- Foundations in this Index have been designed in accordance with the ***Soils and Foundations Handbook***, Appendix B, assuming the following soil conditions:

  Medium Dense Granular Soil (Type 2) Standard Penetration Test (SPT) N Values between 10 and 40
  - Effective Soil Unit Weight = 50 pcf
  - Internal Friction Angle = 30°
  - Cohesion = 0 psf
  - Generally use the average N value over the foundation depth

  Loose Granular Soil (Type 1) SPT N values between 4 and 9
  - Effective Soil Unit Weight = 40 pcf
  - Internal Friction Angle = 28°

- Cohesion = 0 psf

- If the site specific soil conditions are weaker than these values or if a site specific design is desired, design foundations in accordance with ***SDG*** 3.16 and consult with the District Geotechnical Engineer.

Alternate Technical Proposals:

Higher strength reinforcing meeting the requirements of ASTM A615 or ASTM A1035 may be considered for resizing the flexural reinforcement while maintaining the same concrete cover, dimensions and similar bar spacings for posts, piles and panels.

General Design Limitations:

Ensure system is constructible with consideration of overhead clearances (i.e. overhead services, tree canopies, existing overhead structures, etc.) and existing underground services along the entire length of the wall. During the design process, locate potential conflicts or abrupt base elevation changes and include any special designs in the plans.

- If vertical clearance is limited along the length of the wall, consider the low clearance post/foundation option and shorter panel heights (minimum of 4'). Minimum vertical clearance for use of top-installed panels is controlled by the height of the post plus the tallest panel height and the panel lifting mechanism. Side-installed panel details are included in the Standard; however, use is limited to locations where the vertical clearance between posts prohibits top-installation.
- If underground services/restrictions exist and make the use of an auger cast pile impractical, consider designing spread footings for the affected locations.
- If foundations will be installed on a slope or on a berm, adjust the foundation depths based on the ***Soils and Foundations Handbook***, Appendix B.
- The designer must consider both the aesthetic and noise canceling qualities of the wall design. If the base elevations or wall height requirements change along the length of the project, step bottom and/or top of wall panels and post elevations to maintain the aesthetic and noise canceling qualities. If the wall is interrupted or access is required, include wall offset distances and lap lengths in the wall control drawings.
- Posts for 90° corners are asymmetrical and require adjustments to the post spacing or the adjoining panel lengths.

Plan Content Requirements

Include the "Report of Core Borings" (Soil Information Data) on a separate sheet in the plans.

All non-standard noise wall components such as spread footings, special foundations, posts, panels, etc. shall be fully detailed in the plans.

Drainage Holes: Locate wall drainage holes based on site requirements. Evaluate the capacity of drainage openings and locate horizontally and vertically to ensure that offsite stormwater inflows are accommodated without increasing offsite stormwater stages for the appropriate regulatory design events. Refer to the ***Drainage Manual*** for additional guidance. Show drainage holes in the Control Drawings (including Type).

Anti-Graffiti Coating: Consider coating all publicly accessible portions of the wall panels and posts with an anti-graffiti coating (front and/or back of wall). See ***SDM*** 4.4 for limits of anti-graffiti coatings. Tabulate limits of anti-graffiti shown on the "LIMITS OF ANTI-GRAFFITI COATING" Data Table. Specify “sacrificial” or “non-sacrificial” coating system based on District Maintenance recommendations (See Pay Items).

Wall Textures: Specify textures for the front and/or back face of wall. All textures except Type "H" may be used for either the back face or front face of the wall. The Type "H" texture is limited to the front face only. Textures on the front face shall be formed. If wall panels are cast horizontally, textures on the back face must be rolled or pressed, therefore random pattern types on the back face may be more suitable. If wall panels are cast vertically, textures on the back face will be formed, rolled or pressed. For flush face panel options, the textures on the back face may be limited to either "Broom" finish or Type "A" (smooth) finish due to the forming techniques of some manufactures. Type "A" (smooth) finish will provide a surface requiring less maintenance cleaning than that with a "Broom" finish.

Graphics: When required for aesthetics, form wall graphics into the wall panels. Show all graphic locations in the Control Drawings.

If project specific graphics are required, prepare graphic details using the Blank Grid Noise Wall Graphics CADD cell and include them in the plans.

The following possible standard graphic options are available in the FDOT Structures Bar Menu (and/or CADD cell updates) as Noise Wall Graphics CADD cells:

BROWN PELICAN (BP-1)

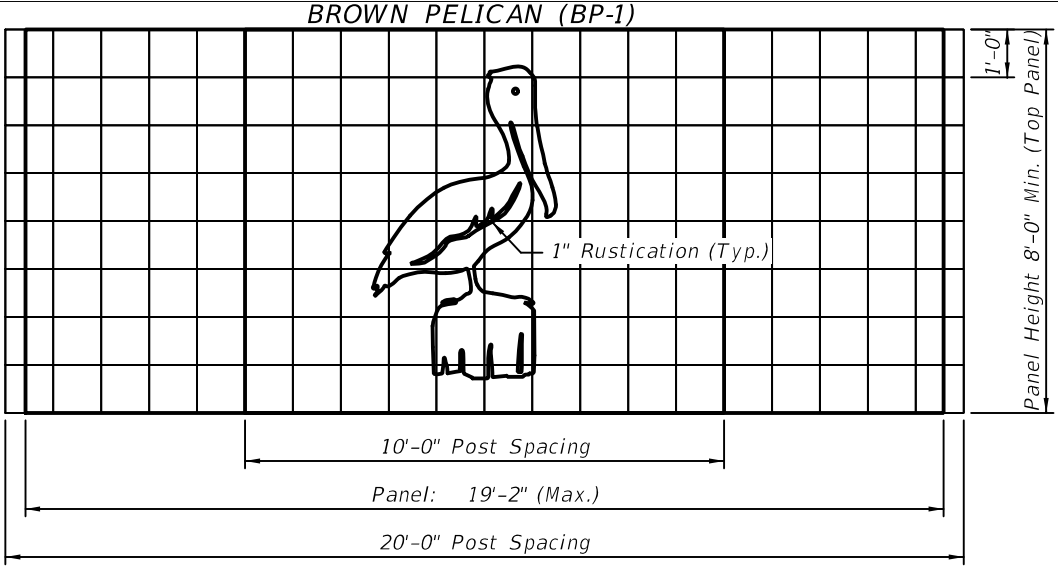

BROWN PELICAN (BP-2)

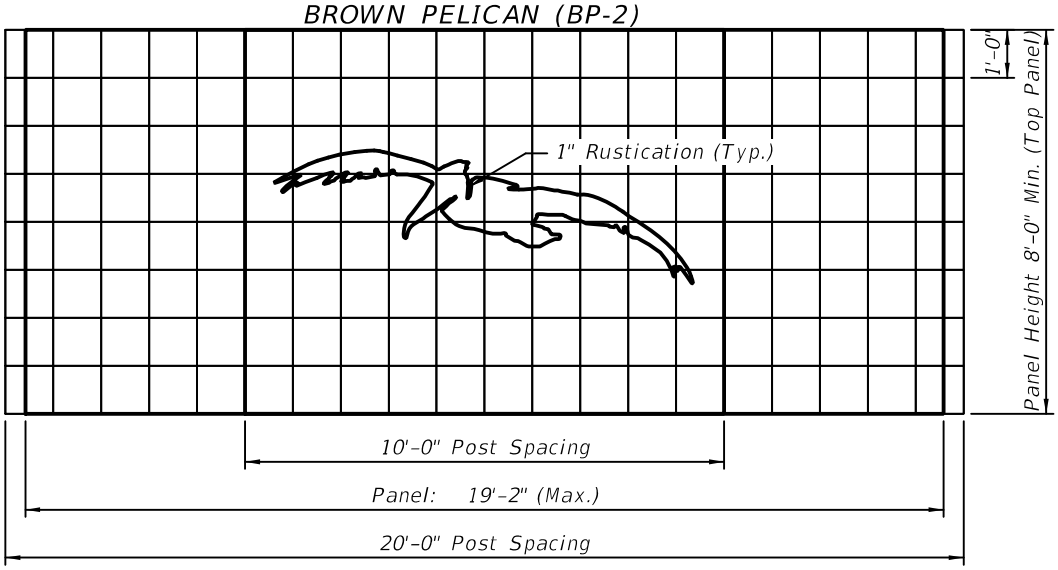

BROWN PELICAN (BP-3)

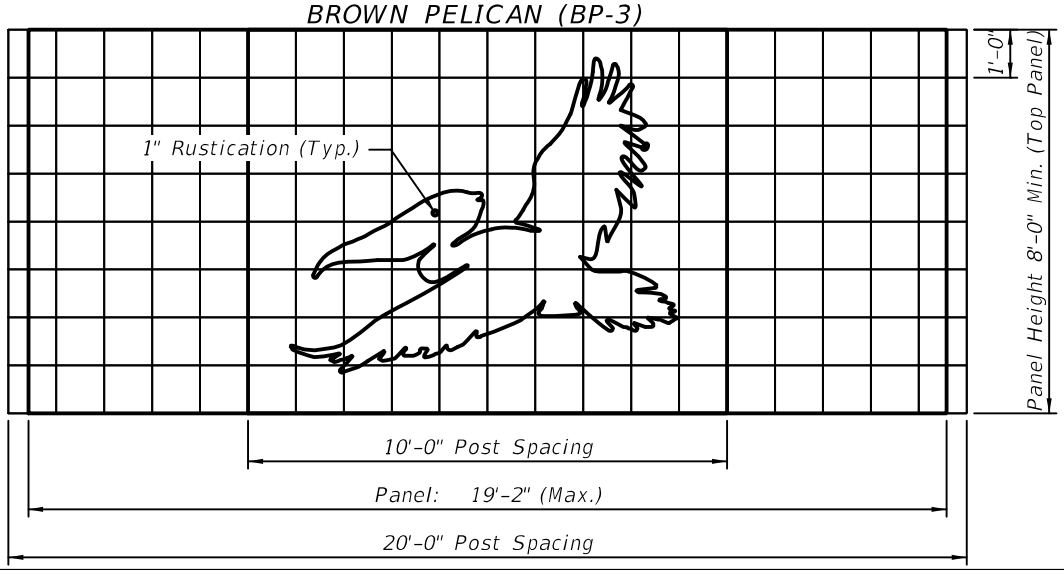

FLAMINGO (F-1)

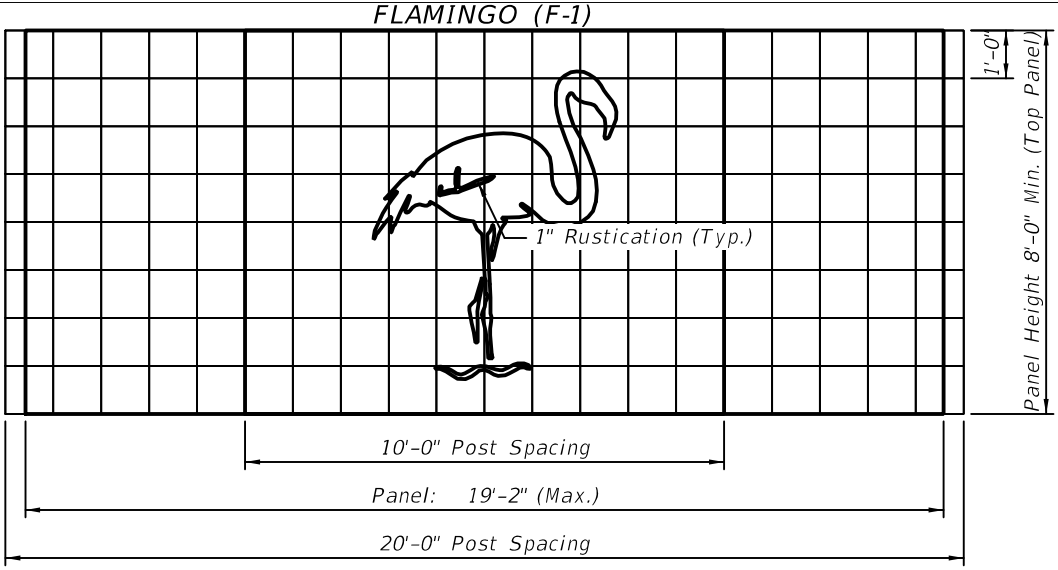

FLAMINGO (F-2)

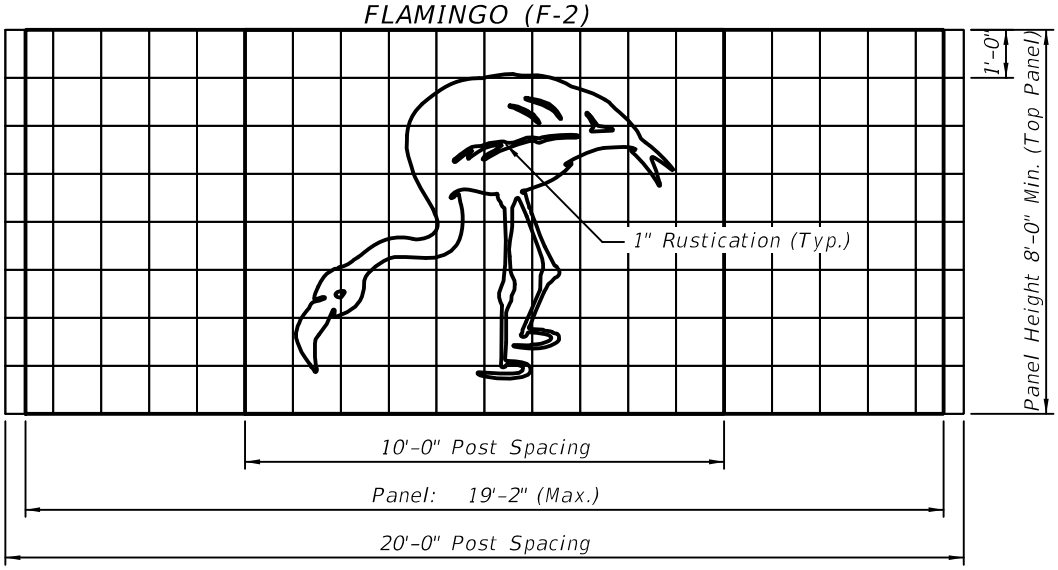

SAIL BOAT (SB-1)

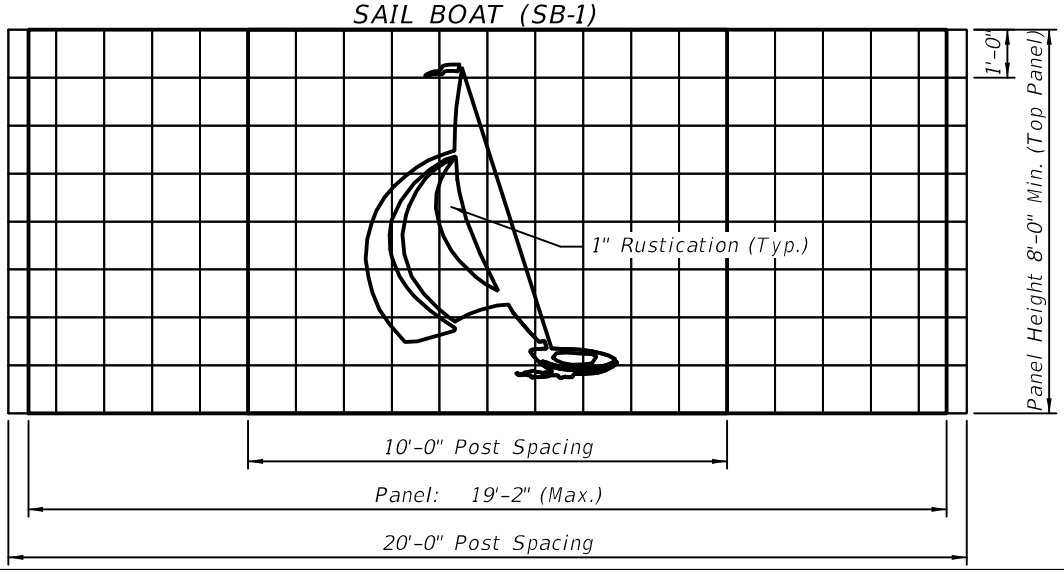

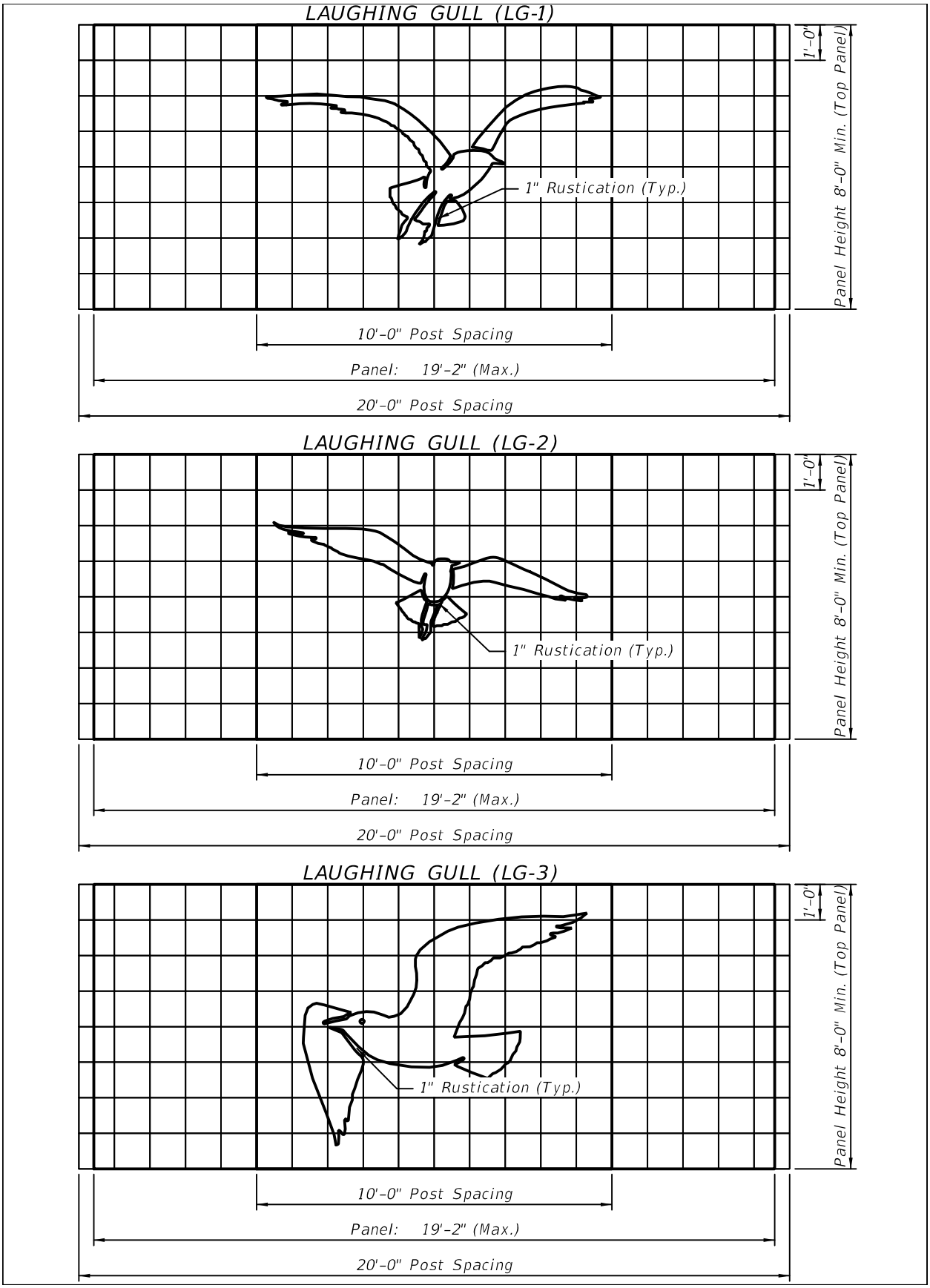
LAUGHING GULL (LG-1)
1" Rustication (Typ.)
1'-0"
Panel Height 8'-0" Min. (Top Panel)
10'-0" Post Spacing
Panel: 19'-2" (Max.)
20'-0" Post Spacing
LAUGHING GULL (LG-2)
1" Rustication (Typ.)
1'-0"
Panel Height 8'-0" Min. (Top Panel)
10'-0" Post Spacing
Panel: 19'-2" (Max.)
20'-0" Post Spacing
LAUGHING GULL (LG-3)
1" Rustication (Typ.)
1'-0"
Panel Height 8'-0" Min. (Top Panel)
10'-0" Post Spacing
Panel: 19'-2" (Max.)
20'-0" Post Spacing

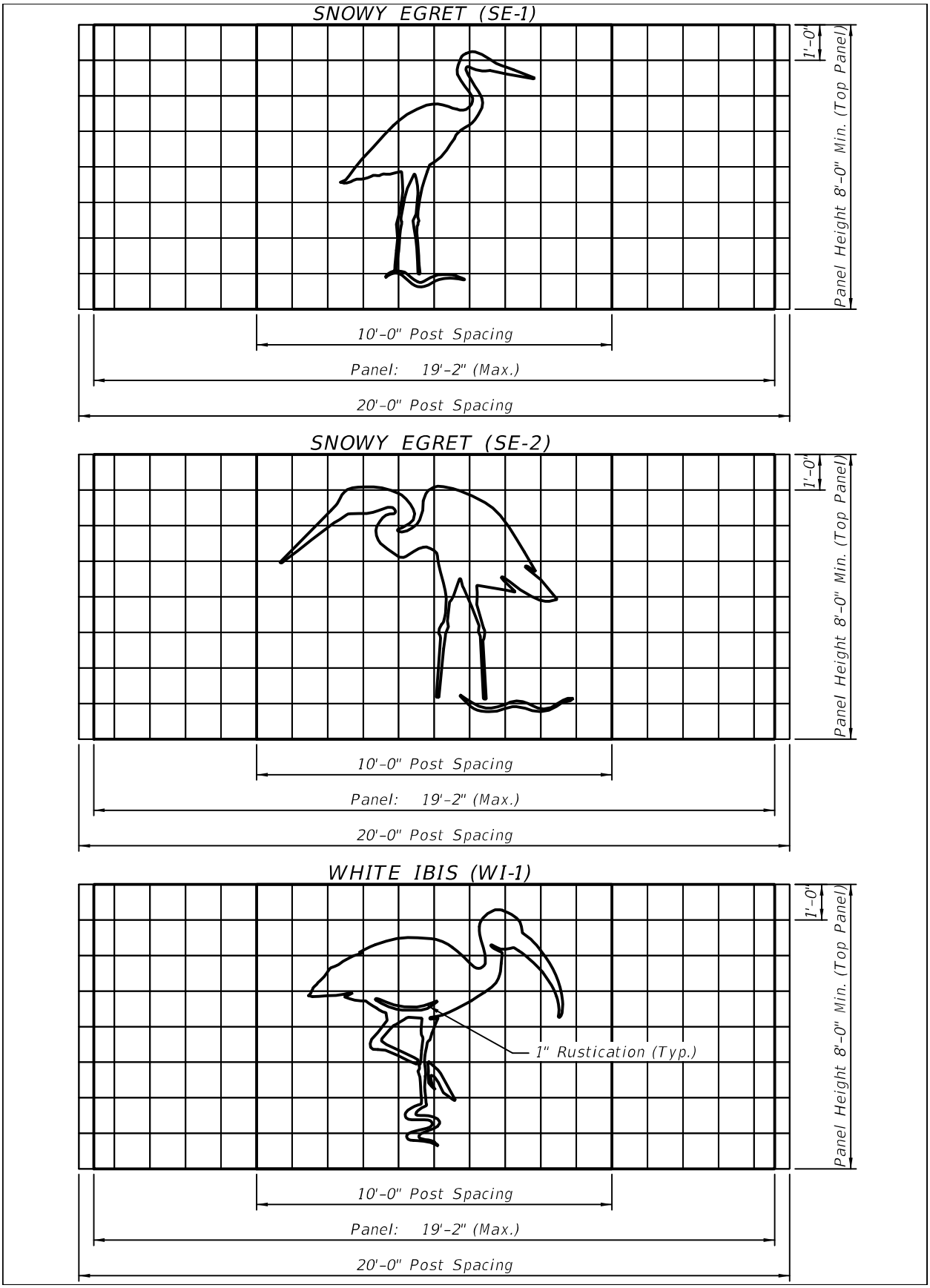
SNOWY EGRET (SE-1)
1'-0"
Panel Height 8'-0" Min. (Top Panel)
10'-0" Post Spacing
Panel: 19'-2" (Max.)
20'-0" Post Spacing
SNOWY EGRET (SE-2)
1'-0"
Panel Height 8'-0" Min. (Top Panel)
10'-0" Post Spacing
Panel: 19'-2" (Max.)
20'-0" Post Spacing
WHITE IBIS (WI-1)
1'-0"
1" Rustication (Typ.)
Panel Height 8'-0" Min. (Top Panel)
10'-0" Post Spacing
Panel: 19'-2" (Max.)
20'-0" Post Spacing

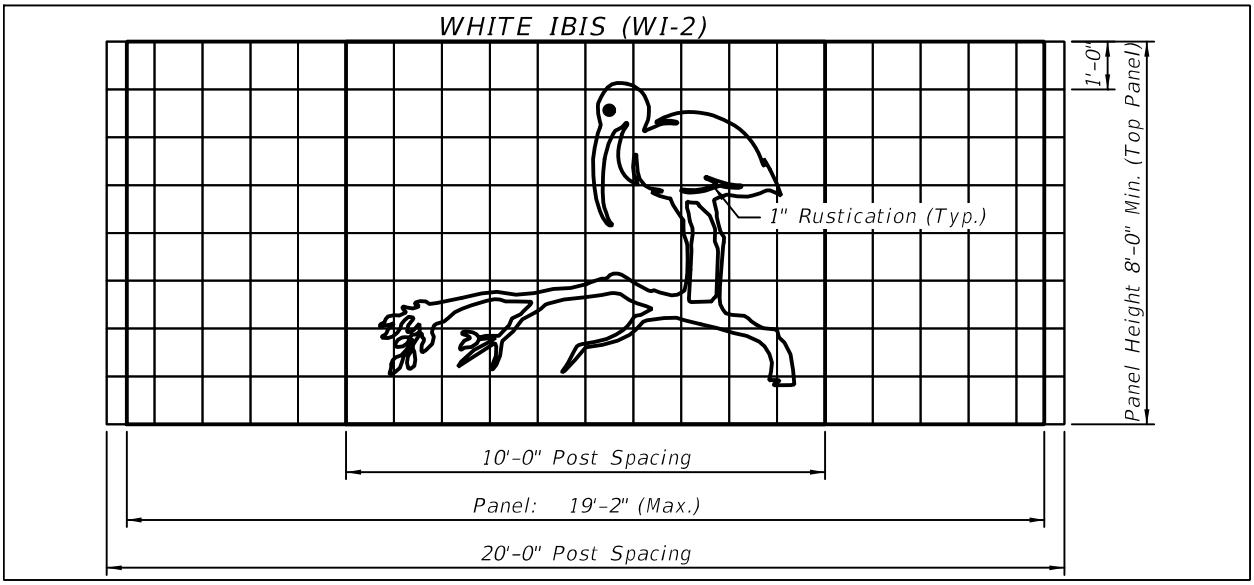

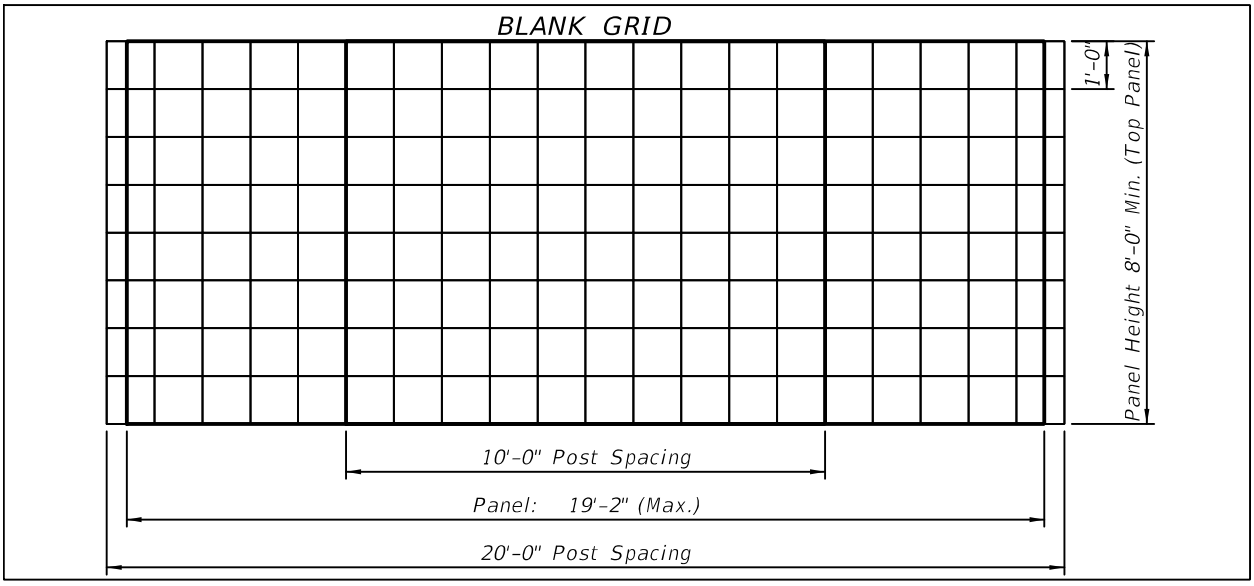

Using the Blank Grid shown above, the Designer may create other graphics as project requirements dictate. Designate each individual project specific graphic with a unique name for identification and cross-reference purposes. General considerations in creating graphics are as follows:

Wall graphics shall be simple and fully detailed in the plans.

Wall graphics should be as large as possible (approximately 8 ft. in height).

Local community input should be considered when determining graphic types.

Post Caps: Indicate in the "PROJECT AESTHETIC REQUIREMENTS" Data Table if Post Caps are required. Only consider Post Caps when enhanced aesthetics are necessary.

Guardrails and delineators may be required at the back face of wall along local streets.

Prepare Control Drawings containing the following information and include them in the plans.

Plan View

- Noise Wall Alignment / Location
- Begin/End Noise Wall Stationings and Offsets
- Offset definition, usually from baseline to front face of Noise Wall
- Step Locations
- Drainage Hole Type and Stations
- Adjacent overhead or in-ground services
- Limits of sod or seeding/topsoil application
- Where removal of or improvements to organic soils are necessary, show the limits of organic soils and the limits of required improvements in the plans along with removal/ improvement methods and method of payment.

Elevation

- Begin/End Wall Stations
- Ground line Elevations
- Top of Noise Wall elevations
- Bottom of Noise Wall elevations and post length
- Drainage Holes (Including type)
- Adjacent overhead or in-ground services
- Locations and names of Noise Wall Graphics
- Limits of anti-graffiti coating (if required)

Complete the following Data Tables and include them in the plans. See Introduction I.3 for more information regarding use of Data Tables.

In the FOUNDATION column of the “SUMMARY OF FOUNDATIONS AND WALL QUANTITIES” enter either "2" for Medium Dense Granular Soils (SPT N values between 10 and 40), "1" for Loose Granular Soils (SPT N values between 4 and 9) or "SD" for Special Design. Use "2" for the majority of foundations (SPT values between 10 and 40). Use "1" only if soil conditions warrant (SPT values between 4 and 9) and "SD" only when required.

NOISE WALLS DATA TABLES

PROJECT REQUIREMENTS — Table Date 1-01-14

WALL NO. (1)	REQUIRED: (YES/NO)			REQUIRED TEXTURES:				PANEL TYPE (FLUSH/ RECESSED/ EITHER)
	GRAPHICS (1)	COLORED COATINGS (2)	PRECAST POST CAP (3)	PANELS:		POSTS:		
				FRONT FACE	BACK FACE	FRONT FACE	BACK FACE	

(1) See Control Drawings.
(2) Coat all exposed faces of wall with Class 5 Applied Finish Coating.
The panel color shall be per Federal Color Chart, Federal Standard No. 595C color _____.
(3) The post and cap color shall be per Federal Color Chart, Federal Standard No. 595C color _____.

SUMMARY OF FOUNDATIONS AND WALL QUANTITIES — Table Date 1-01-15

WALL NO.	STATION TO STATION	FOUNDATION (4)	TOP OR SIDE INSTALLED (T, S)	TOP OF WALL ELEV. (FT)	BOTTOM OF WALL ELEV. (FT)	POST LENGTH (FT)	AREA (SF)

(4) 1 = Loose Granular Soils (4≤N≤9)
2 = Medium Dense Granular Soil (10≤N≤40)
SD = Special Design details (See Contract Plans)

LIMITS OF ANTI-GRAFFITI COATING (5) — Table Date 1-01-15

WALL NO.	STATION TO STATION	FRONT FACE/ BACK FACE/ BOTH (6)	MINIMUM HEIGHT (7)	AREA (SF)

(5) Coat limits shown in table with _____ (sacrificial/non-sacrificial) anti-graffiti coating matching the wall color.
(6) Includes Posts and Panels.
(7) Height is measured from finished grade.

GENERAL NOTES [Notes Date 1-01-14]:

1. Work these Data Tables with Index No. 5200.
2. Noise Walls shall meet the project aesthetic requirements as depicted in the above table and elsewhere in the plans.
3. Front Face indicates roadway side of wall. Back Face indicates non-roadway side of wall.
4. Wind Speed is ___ MPH.

Payment

Item number	Item description	Unit Measure
534-72-101	Concrete Noise Wall, Permanent	SF
534-72-102	Concrete Noise Wall, Temporary	SF

Example

Wall No. 1 aesthetics require a recessed panel type wall with Type C post caps. The front and back face panel textures are to be Ashlar Stone. The post texture is to be smooth. The wall will not have any graphics. The color of the wall, posts and caps is to be a light brown, (color number 33446).

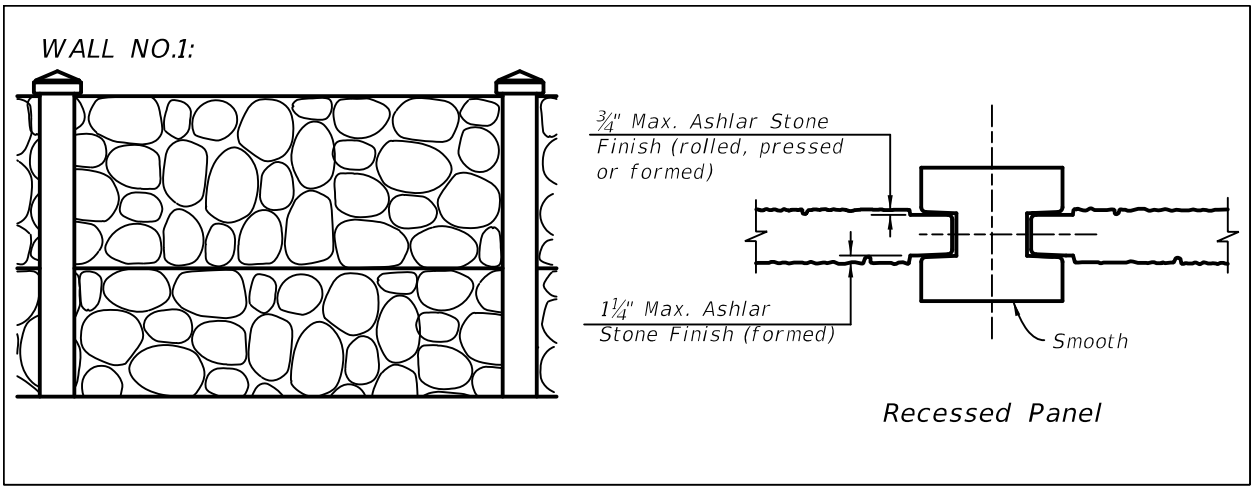

Wall No. 2 aesthetics require a flush panel type wall. The front face of panels and posts are to be Trapezoid Vertical Fins with Fractured Face (Colorado Drag), with graphics. The Back Face Panel texture is to be Pea Gravel. The color of the wall is to be light brown, color number 33446. Post caps are not required.

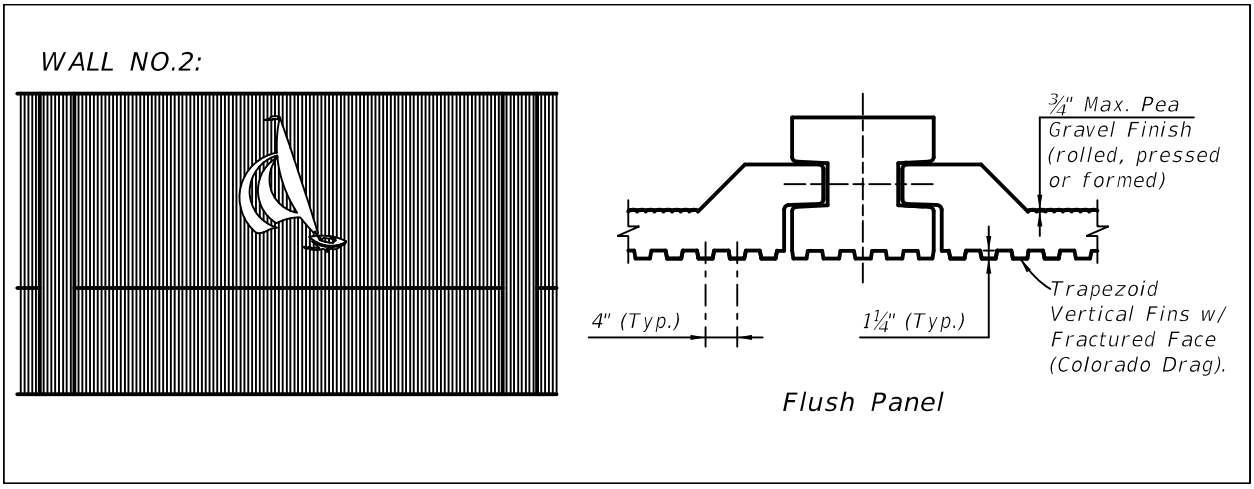

TABLE OF VARIABLES, CADD CELL 05200 "NOISE WALLS DATA TABLES"

PROJECT REQUIREMENTS								Table Date 1-01-14
WALL NO. (1)	REQUIRED: (YES/NO)			REQUIRED TEXTURES:				PANEL TYPE (FLUSH/ RECESSED/ EITHER)
	GRAPHICS (1)	COLORED COATINGS (2)	PRECAST POST CAP (3)	PANELS:		POSTS:		
				FRONT FACE	BACK FACE	FRONT FACE	BACK FACE	
1	NO	YES	C	B	B	A	A	RECESSED
2	SB-1	YES	NO	H	F	H	A	FLUSH

(1) See Control Drawings.
(2) Coat all exposed faces of panels with Class 5 Applied Finish Coating. The color shall be per Federal Color Chart, Federal Standard No. 595C color 33446.
(3) Coat post caps the same color as posts, with a Class 5 Applied Finish Coating. The color shall be per Federal Color Chart, Federal Standard No. 595C color 33446.

Index 5210 Traffic Railing/Noise Wall (8'-0")

Design Criteria

NCHRP Report 350 TL-4; ***NCHRP Report 663***; ***AASHTO LRFD Bridge Design Specifications***; ***Structures Design Guidelines (SDG)***

Design Assumptions and Limitations

The Traffic Railing / Noise Wall (8'-0") is the basic non-proprietary crash tested traffic railing / noise wall combination for use on FDOT bridges and retaining walls. It can also be used for ground mounted applications within the clear zone when used in conjunction with the foundations presented in Indexes 5212, 5213 and 5214. This railing is first and foremost a traffic railing that also serves as a noise barrier. To preserve the crashworthiness of the design, this railing must be used in accordance with the requirements of ***SDG*** 6.7 for all applications.

The junction slab and footings within the Indexes 5211 thru 5215 were originally sized based on a 54 kip load applied at 49" above the riding surface and applied over the length of the wall between expansion joints (50'-0" minimum on Indexes 5211 and 5213 thru 5215), (30'-0" minimum on Index 5212). This was based on the recommendation by the crash test researchers at Texas Transportation Institute (TTI). Although the TL-4 load application height is a minimum 32", due to the taller face of the railing/wall the colliding vehicle body engages the structure at a greater height. Recent changes to ***LRFD*** (Section 15) have codified this increase in height to 6'-0" for application of the vehicle collision load for setbacks < 1'-0". However, recent research has also shown that for stability (overturning and sliding) the TL-4, 54 kip dynamic load is very conservative when applied as a static analysis. Structures Design Bulletin C11-06 provides some insight into this for regular height traffic railings, but due the increased height of the noise wall, additional dynamic load is anticipated to be applied to the structure, so no reduced static load for stability is provided at this time, but no changes to the foundation sizes have been made pending review of the anticipated recommendations from NCHRP Project 22-20(02).

For bridge applications, design bridge decks supporting Traffic Railing / Noise Walls (8'-0") in accordance with the requirements of ***SDG*** 4.2. For bridge decks up to a maximum thickness of 9", the two Bars 5S1 placed in the bridge deck may substitute for the longitudinal deck steel located within the limits of Bars 5V, provided that the total area of longitudinal deck steel beneath the railing, as required by calculation, is not reduced.

The tabulated values in the SDG 4.2.5 are based on LRFD A13.3.1 yield-line theory and are intended to prevent local failure of the structural components and allow the load to be supported by the length of the wall between expansion joints for stability.

For retaining wall applications (Index 5212), resistance for overturning is calculated using a point of rotation located at the outside face of retaining wall. A special design may be required if bearing conditions between the junction slab and retaining wall warrant consideration for an alternate point of rotation. See NCHRP Report 663 for more information.

Form liners providing a textured finish are permitted on the outside face of the Traffic Railing / Noise Wall (8'-0") with the following provisions: (1) The maximum amplitude of the form liner on the lower 2'-8" section shall be limited to 1" depth; (2) Any form liner used above 2'-8", must provide a thickened concrete section to maintain 2" cover. Full details of this thickened section and the form liner shall be provided in the plans. Form liners complying with the requirements of ***SDG*** 6.7 are allowed on the upper vertical portion of the inside face of the Traffic Railing / Noise Wall but are not recommended.

When the Traffic Railing / Noise Wall (8'-0") terminates on the bridge, the End Taper shall be located at an open joint. When the Traffic Railing / Noise Wall (8'-0") terminates on the Approach Slab, the End Taper shall terminate at Begin or End Approach Slab as shown.

Indexes 6011, 5212, 5213, 5214, 5215, 20900 and 20910 contain details for the use of Traffic Railing / Noise Walls (8'-0") on retaining walls, approach slabs and footings.

The details as shown for installing for 2" diameter conduits and associated Embedded Junction Boxes (EJBs) in traffic railings have been determined to be crashworthy in accordance with the requirements of ***NCHRP Report 350, AASHTO Manual for Assessing Safety Hardware (MASH)*** and the ***AASHTO LRFD Bridge Design Specifications***. To preserve the crashworthiness of Traffic Railing / Noise Walls, no more than two 2" diameter conduits and associated EJBs, as shown on ***Design Standards*** Index 21210, may be installed within the traffic railing portion (only) of the Traffic Railing / Noise Walls.

Project specific details are required for the use of 10'-0" and 12'-0" tall Traffic Railing / Noise Walls on footings. Base these details on Indexes 5210 and 5211.

For treatment of Traffic Railing / Noise Walls (8'-0") on skewed bridges see Index 420.

Details are available for increasing the crashworthiness of this Traffic Railing / Noise Wall to ***NCHRP Report 350*** Test Level 5. Contact the Structures Design Office for more information.

Plan Content Requirements

In the Structures Plans:

In the Materials Note on the General Notes Sheet, specify the concrete class in accordance with the superstructure environment classification. See ***SDG*** 1.4.

Show and label, by name or Index number, the Traffic Railing / Noise Wall (8'-0") on the Plan and Elevation, Typical Section, Superstructure, Approach Slab and Finish Grade Elevations Cross Section sheets, Retaining Wall Control Drawings, and other sheets as required. Include cross references to ***Design Standards*** Index 20900 or 20910 as appropriate.

When the Traffic Railing / Noise Wall (8'-0") ends on a bridge, provide an End Taper and terminate the low end of the End Taper at an open joint in the traffic railing, preferably at the end of a span. Continue the bridge mounted traffic railing along the remainder of the bridge.

When the Traffic Railing / Noise Wall (8'-0") ends on an Approach Slab, provide an End Taper and terminate the low end of the End Taper at Begin or End Approach Slab. Provide an Index 400 Detail J Guardrail Approach Transition, Index 410 Concrete Barrier Wall or crash cushion at the low end of the End Taper.

On the Superstructure section sheets, show the two Bars 5S1 placed in the bridge deck within the Bars 5V along with the rest of the deck steel.

All concrete and Bars 5P, 5R, 5S and 5V required to construct the Traffic Railing / Noise Wall are included in the Estimated Traffic Railing Quantities. Do not include Traffic Railing / Noise Wall concrete in the estimated concrete quantities, or Bars 5P, 5R, 5S and 5V in the reinforcing bar lists and estimated reinforcing steel quantities for supporting bridge decks, approach slabs or retaining walls.

In the Roadway or Structures Plans when the Traffic Railing / Noise Wall (8'-0") is used on retaining walls:

In the Materials Note on the General Notes Sheet, specify the concrete class in accordance with the retaining wall environment classification. See ***SDG*** 1.4.

Show and label, by name or Index number, the Traffic Railing / Noise Wall (8'-0") on the Retaining Wall Control Drawings, and other sheets as required. Include cross references to ***Design Standards*** Index 5212 and/or 6100 Series as appropriate.

For Index 5212, show and label the junction slab as either TYPE 1 or TYPE 2, based on the required width for stability. Determine the appropriate TYPE using Table 1 below. Project specific designs may be required for locations exceeding the listed design parameters.

When the Traffic Railing / Noise Wall (8'-0") ends on a retaining wall, provide an End Taper and terminate the low end of the End Taper at an open joint in the traffic railing. Continue the retaining wall mounted traffic railing along the remainder of the retaining wall.

Table 1 Junction Slab Selection

Wind Speed (mph)	Retaining Wall Height (ft)	Junction Slab Width (ft)
110	≤ 50	5 ft. (TYPE 1)
130	≤ 50	5 ft. (TYPE 1)
150	≤ 50	6 ft. (TYPE 2)

In the Roadway Plans when the Traffic Railing / Noise Wall (8'-0") is used for ground mounted applications:

In the Materials Note on the General Notes Sheet, specify the concrete class in accordance with the substructure or retaining wall environment classification. See ***SDG*** 1.4.

Show and label, by name or Index number, the Traffic Railing / Noise Wall (8'-0") on the Plan and Profile, Cross Section and other sheets as required. Include cross references to ***Design Standards*** Index 5213, 5214 and 5215 as appropriate.

When the approach end of the Traffic Railing / Noise Wall (8'-0") ends along the roadway within the clear zone, use one of the following treatments:

- Provide an End Taper and Index 400 Detail J Guardrail Approach Transition, Index 410 Concrete Barrier Wall or crash cushion at the low end of the End Taper.
- Flare the full height Traffic Railing / Noise Wall (8'-0") out beyond the clear zone. Flare rates vary based on both design speed and highway application (i.e., Interstate, urban or rural installations). See ***Design Standards*** and ***PPM*** for applicable flare rates.
- Terminate the full height Traffic Railing / Noise Wall (8'-0") within the clear zone and shield the end with a wide crash cushion. Ensure the traffic face of the wide crash cushion is offset at least 24-inches from vertical face of Traffic Railing / Noise Wall (8'-0").

When the trailing end of the Traffic Railing / Noise Wall (8'-0") ends along the roadway within the clear zone of adjacent traffic, and the trailing end is not within the clear zone of opposing traffic, the Traffic Railing / Noise Wall (8'-0") can remain full height all the way to the end or the End Taper can be used. Provide Index 400 Guardrail or Index 410 Concrete Barrier Wall as required to shield hazards beyond the end of the Traffic Railing/ Noise Wall.

Include project specific details for 10'-0" and 12'-0" tall Traffic Railing / Noise Walls.

Payment

Item number	Item description	Unit Measure
521-5-20	Concrete Traffic Railing-Bridge, F Shaped With Noise Wall 8' Height	LF
521-7-1	Concrete Traffic Railing Barrier Retaining Wall System, F Shape With Noise Wall, 8' Height	LF
521-72-20	Shoulder Concrete Barrier Wall, F Shaped, With 8' Noise Wall	LF
521-72-21	Shoulder Concrete Barrier Wall, F Shaped, With 10' Noise Wall	LF
521-72-22	Shoulder Concrete Barrier Wall, F Shaped, With 12' Noise Wall	LF
521-72-23	Shoulder Concrete Barrier Wall, F Shaped, With 14' Noise Wall	LF

Index 5211 Traffic Railing/Noise Wall (14'-0") (Rev. 11/16)

Design Criteria

NCHRP Report 350 TL-4; ***AASHTO LRFD Bridge Design Specifications***; ***Structures Design Guidelines (SDG)***

Design Assumptions and Limitations

The Traffic Railing / Noise Wall (14'-0") is a non-proprietary traffic railing / noise wall combination that is based on the crash tested Traffic Railing / Noise Wall (8'-0"). It can only be used for ground mounted applications, usually within the clear zone, and cannot be used on bridges or retaining walls. This railing is first and foremost a traffic railing that also serves as a noise barrier. To preserve the crashworthiness of the design, this railing must be used in accordance with the requirements of ***SDG*** 6.7 for all applications.

Work this Standard Index 5210 - Traffic Railing / Noise Wall (8'-0") and one or more of the following:

Index 5213 - Traffic Railing / Noise Wall T-Shaped Spread Footing,
Index 5214 - Traffic Railing / Noise Wall L-Shaped Spread Footing or
Index 5215 - Traffic Railing / Noise Wall Trench Footing

The details as shown for installing for 2" diameter conduits and associated Embedded Junction Boxes (EJBs) in traffic railings have been determined to be crashworthy in accordance with the requirements of ***NCHRP Report 350, AASHTO Manual for Assessing Safety Hardware (MASH)*** and the ***AASHTO LRFD Bridge Design Specifications***. To preserve the crashworthiness of Traffic Railing / Noise Walls, no more than two 2" diameter conduits and associated EJBs, as shown on ***Design Standards*** Index 21210, may be installed within the traffic railing portion (only) of the Traffic Railing / Noise Walls.

Form liners providing a textured finish are permitted on the outside face of the Traffic Railing / Noise Wall (14'-0") with the following provisions: (1) The maximum amplitude of the form liner on the lower 2'-8" section shall be limited to 1" depth; (2) Any form liner used above 2'-8", must provide a thickened concrete section to maintain 2" cover. Full details of this thickened section and the form liner shall be provided in the plans. Form liners complying with the requirements of ***SDG*** 6.7 are allowed on the upper vertical portion of the inside face of the Traffic Railing / Noise Wall but are not recommended.

Project specific details are required for the use of 10'-0" and 12'-0" tall Traffic Railing / Noise Walls on footings. Base these details on Indexes 5210 and 5211.

Plan Content Requirements

In the Roadway Plans when the Traffic Railing / Noise Wall (14'-0") is used for ground mounted applications:

In the Materials Note on the General Notes Sheet, specify the use of Class II or IV concrete in accordance with the substructure or retaining wall environment classification. See ***SDG*** 1.4.

Show and label, by name or Index number, the Traffic Railing / Noise Wall (14'-0") on the Plan and Profile, Cross Section and other sheets as required. Include cross references to ***Design Standards*** Index 5212, 5213, 5214 and 5215 as appropriate.

When the approach end of the Traffic Railing / Noise Wall (14'-0") is within the roadway clear zone, use one of the following treatments:

- Provide a Traffic Railing / Noise Wall (8'-0") End Taper adjacent to the Traffic Railing / Noise Wall (14'-0") End Taper. Continue the footing for Traffic Railing/Noise Wall (14'-0") End Taper as the foundation for the Traffic Railing/Noise Wall (8'-0") End Taper. Provide an Index 400 Detail J Guardrail Approach Transition, Index 410 Concrete Barrier Wall or crash cushion at the low end of the Traffic Railing / Noise Wall (8'-0") End Taper. Maintain the same slope for both tapers; approximately 1:8 (vert. : horiz.).
- Provide a Traffic Railing / Noise Wall (8'-0") End Taper adjacent to the full height Traffic Railing / Noise Wall (14'-0"). Continue the footing for Traffic Railing/Noise Wall (14'-0") as the foundation for the Traffic Railing/Noise Wall (8'-0") End Taper. Provide an Index 400 Detail J Guardrail Approach Transition, Index 410 Concrete Barrier Wall or crash cushion at the low end of the Traffic Railing / Noise Wall (8'-0") End Taper.
- Flare the full height Traffic Railing / Noise Wall (14'-0") out beyond the clear zone. Flare rates vary based on both design speed and highway application (i.e., Interstate, urban or rural installations). See ***Design Standards*** and ***PPM*** for applicable flare rates.
- Terminate the full height Traffic Railing / Noise Wall (14'-0") within the clear zone and shield the end with a wide crash cushion. Ensure the traffic face of the wide crash cushion is offset at least 24-inches from vertical face of Traffic Railing / Noise Wall (14'-0").

When the trailing end of the Traffic Railing / Noise Wall (14'-0") ends along the roadway within the clear zone of adjacent traffic, and the trailing end is not within the clear zone of opposing traffic, the Traffic Railing / Noise Wall (14'-0") can remain full height all the way to the end or the End Taper can be used. Provide Index 400 Guardrail or Index 410 Concrete Barrier Wall as required to shield hazards beyond the end of the Traffic Railing / Noise Wall.

Include project specific details for 10'-0" and 12'-0" tall Traffic Railing / Noise Walls.

Payment

Item number	Item description	Unit Measure
521-72-23	Shoulder Concrete Barrier Wall, F Shaped, With 14' Noise Wall	LF

Index 5212 Traffic Railing/Noise Wall (8'-0") Junction Slab (Rev. 11/16)

Design Criteria

See Instructions for Index 5210.

Design Assumptions and Limitations

Use this Standard with Index 5210 when the Traffic Railing / Noise Wall (8'-0") is installed on a retaining wall.

Plan Content Requirements

See Instructions for Index 5210.

Payment

Item number	Item description	Unit Measure
521-7-1	Concrete Traffic Railing Barrier-Retaining Wall System, F Shape With Sound/Noise Barrier Wall, 8' Height	LF

Index 5213 Traffic Railing/Noise Wall T-Shaped Spread Footing

Design Criteria

See Instructions for Index 5210 and/or Index 5211.

Design Assumptions and Limitations

Use this Standard with Index 5210 and/or 5211 when the Traffic Railing / Noise Wall (8'-0") and/or (14'-0") is installed on a T-Shaped spread footing.

Project specific details are required for the use of 10'-0" and 12'-0" tall Traffic Railing / Noise Walls. Base these details on Indexes 5210 and 5211.

Plan Content Requirements

See Instructions for Index 5210 and/or Index 5211.

Include project specific details for 10'-0" and 12'-0" tall Traffic Railing / Noise Walls.

Payment

Item number	Item description	Unit Measure
521-72-20	Shoulder Concrete Barrier Wall, F Shaped, With 8' Noise Wall	LF
521-72-21	Shoulder Concrete Barrier Wall, F Shaped, With 10' Noise Wall	LF
521-72-22	Shoulder Concrete Barrier Wall, F Shaped, With 12' Noise Wall	LF
521-72-23	Shoulder Concrete Barrier Wall, F Shaped, With 14' Noise Wall	LF

See also Instructions for Index 5210 and/or Index 5211.

Index 5214 Traffic Railing/Noise Wall L-Shaped Spread Footing

Design Criteria

See Instructions for Index 5210 and/or Index 5211.

Design Assumptions and Limitations

Use this Standard with Index 5210 and/or 5211 when the Traffic Railing / Noise Wall (8'-0") and/or (14'-0") is installed on a L-Shaped spread footing.

Project specific details are required for the use of 10'-0" and 12'-0" tall Traffic Railing / Noise Walls. Base these details on Indexes 5210 and 5211.

Plan Content Requirements

See Instructions for Index 5210 and/or Index 5211.

Include project specific details for 10'-0" and 12'-0" tall Traffic Railing / Noise Walls.

Payment

Item number	Item description	Unit Measure
521-72-20	Shoulder Concrete Barrier Wall, F Shaped, With 8' Noise Wall	LF
521-72-21	Shoulder Concrete Barrier Wall, F Shaped, With 10' Noise Wall	LF
521-72-22	Shoulder Concrete Barrier Wall, F Shaped, With 12' Noise Wall	LF
521-72-23	Shoulder Concrete Barrier Wall, F Shaped, With 14' Noise Wall	LF

See also Instructions for Index 5210 and/or Index 5211.

Index 5215 Traffic Railing/Noise Wall Trench Footing

Design Criteria

See Instructions for Index 5210 and/or Index 5211.

Design Assumptions and Limitations

Use this Standard with Index 5210 and/or 5211 when the Traffic Railing / Noise Wall (8'-0") and/or (14'-0") is installed on a trench footing.

Project specific details are required for the use of 10'-0" and 12'-0" tall Traffic Railing / Noise Walls. Base these details on Indexes 5210 and 5211.

Plan Content Requirements

See Instructions for Index 5210 and/or Index 5211.

Include project specific details for 10'-0" and 12'-0" tall Traffic Railing / Noise Walls.

Payment

Item number	Item description	Unit Measure
521-72-20	Shoulder Concrete Barrier Wall, F Shaped, With 8' Noise Wall	LF
521-72-21	Shoulder Concrete Barrier Wall, F Shaped, With 10' Noise Wall	LF
521-72-22	Shoulder Concrete Barrier Wall, F Shaped, With 12' Noise Wall	LF
521-72-23	Shoulder Concrete Barrier Wall, F Shaped, With 14' Noise Wall	LF

See also Instructions for Index 5210 and/or Index 5211.

Index 5250 Perimeter Wall (Rev. 11/16)

Design Criteria

AASHTO LRFD Bridge Design Specifications; ***Structures Design Guidelines (SDG)***

Design Assumptions and Limitations

Design Assumptions:

Wall heights are a nominal 8 feet above finished grade and are designed and detailed to resist wind pressures based on requirements of ***SDG*** 2.4.

Foundations have been designed for loose sand with an uncorrected SPT blow count of N=5 or greater. Clayey soils were investigated and did not control the design.

Precast Option Design Assumptions:

- Wall Panels, as designed, are adequate for all wind zones when installed between posts spaced at 20'-0".
- Post reinforcing and foundation depths are based on 20'-0" post spacing with a maximum wind exposed wall height of 9'-0".
- Auger cast pile foundations were designed in accordance with the ***Soils and Foundations Handbook***, Appendix B.

Masonry Option Design Assumptions:

- Walls are designed as a continuous cantilevered wall in accordance with ***ACI 530*** using Strength Design for a maximum wind exposed wall height of 8'-8" with the top of foundation a minimum of 6" below grade.
- Foundations are designed in accordance with ***AASHTO LRFD***, Section 15.

Design Limitations:

See the ***PPM*** for limitations on the applicability of this Index.

Perimeter Walls are not designed for vehicle impact loads. If the walls cannot be placed at the required set back distances or behind traffic railings or guardrail they will not be allowed.

Ensure system is constructible with consideration of overhead clearances (i.e. overhead services, tree canopies, existing overhead structures, etc.) and existing underground services along the entire length of the wall.

- If foundations will be installed on a slope, adjust the standard foundation depths based on the ***Soils and Foundations Handbook***.

Plan Content Requirements

Include the "Report of Core Borings" (Soil Information Data) on a separate sheet in the plans.

Fully detail non-standard components in the plans.

Drainage Holes: Locate wall drainage holes based on site requirements. Evaluate the capacity of drainage openings and locate horizontally and vertically to ensure that offsite stormwater inflows are accommodated without increasing offsite stormwater stages for the appropriate regulatory design events. Refer to the ***Drainage Manual*** for additional guidance. Show location, number, spacing and type of drainage holes in the Wall Control Drawings.

Anti-Graffiti Coating: Consider coating all publicly accessible portions of the walls with an anti-graffiti coating; see ***SDM*** 4.4 for limits of anti-graffiti coatings. When included, tabulate limits of anti-graffiti coatings in the "PERIMETER WALL DATA TABLE". Specify a "sacrificial" or "non-sacrificial" coating system based on District Maintenance recommendations (See Pay Items). Anti-Graffiti Coating shall match the Class 5 Finish color (when required) or be clear when color is not required.

Wall Textures: See ***SDG*** 1.4.5.

Caps: Include the post cap type in the "PERIMETER WALL DATA TABLE". Use notes to specify color when required.

Prepare Wall Control Drawings containing the following information and include them in the plans. Wall layouts must be usable for both Precast and Masonry Options.

Plan View

- Perimeter Wall Alignment / Location
- Begin/End Wall Stationing and Offsets
- Offset definition; usually from Baseline to Front Face of Wall
- Drainage Hole Locations
- Adjacent overhead or in-ground services
- Limits of sod or seeding/topsoil application
- Where removal of or improvements to organic soils are necessary, show the limits of organic soils and the limits of required improvements in the plans along with removal/ improvement methods and method of payment.

Elevation

- Ground Line Elevations
- Top of Wall Elevations
- Bottom of Wall Elevations and Finished Grade Line.
- Step Locations

If the base elevations or wall height requirements change along the length of the project, step bottom and/or top of walls and post/pilaster elevations to maintain the aesthetic qualities while meeting the design criteria requirements.

- Drainage Holes (Including type)
- Adjacent overhead or in-ground services
- Limits of anti-graffiti coating (if required)
- Guardrail or delineators on back face of wall

Complete the "PERIMETER WALLS DATA TABLE" with notes; include them in the plans. See Introduction I.3 for more information regarding use of Data Tables.

PERIMETER WALLS DATA TABLE					Table Date 01-31-14
WALL NO. (1)	STATION TO STATION	FRONT FACE TEXTURE (2)	PRECAST POST CAP (TYPE)	LIMITS OF ANTI-GRAFFITI COATING (2)	
				FRONT FACE/ BACK FACE/ BOTH	AREA (SQUARE FT) (SEE NOTE 4)

(1) See wall control drawings.
(2) Specify texture and limits of anti-graffiti coatings in the Table.

GENERAL NOTES [Notes Date 01-01-14]:

1. Wind Speed is ___ MPH.

2. Colors shall be per Federal color Chart, Federal Standard No 595C.
   Wall Color #_____, Post/Pilaster Color #_____, Caps Color #_____.

3. Coat wall for stations shown in table with _____(sacrificial/non-sacrificial) anti-graffiti coating.

4. Height for Class 5 finish and/or anti-graffiti coating is from finished grade to top of wall (8 feet).

5. Work these Data Tables with Index No. 5250.

6. Front Face indicates roadway side of wall. Back Face indicates non-roadway side of wall.

Payment

Item number	Item description	Unit Measure
534-73	Perimeter Wall	SF
563-A	Anti-Graffiti Coating	SF

Example

PERIMETER WALLS DATA TABLE — Table Date 01-31-14

WALL NO. (1)	STATION TO STATION	FRONT FACE TEXTURE (2)	PRECAST POST CAP (TYPE)	LIMITS OF ANTI-GRAFFITI COATING (2)	
				FRONT FACE/ BACK FACE/ BOTH	AREA (SQUARE FT) (SEE NOTE 4)
1	125+25.40 to 126+30.40	Split Face	Type 2	Front Face	840
1	126+30.40 to 126+50.40	Split Face	Type 2	Both	320
2	126+75.22 to 127+90.00	Split Face 8 Fluted	Type 2	None	0
2	127+90.00 to 128+50.00	Split Face 8 Fluted	Type 2	Both	960

(1) See wall control drawings.
(2) Specify texture and limits of anti-graffiti coatings in the Table.

GENERAL NOTES [Notes Date 01-01-14]:

1. Wind Speed is 130 MPH.

2. Colors shall be per Federal color Chart, Federal Standard No 595C.
   Wall Color #31136, Post/Pilaster Color #23722, Caps Color #23722

3. Coat wall for stations shown in table with sacrificial anti-graffiti coating.

4. Height for Class 5 finish and/or anti-graffiti coating is from finished grade to top of wall (8 feet).

5. Work these Data Tables with Index No. 5250.

6. Front Face indicates roadway side of wall. Back Face indicates non-roadway side of wall.

Index 6010 C-I-P Cantilever Retaining Wall

Design Criteria

AASHTO LRFD Bridge Design Specifications, 6th Edition; ***Structures Design Guidelines (SDG)***

Design Assumptions and Limitations

Use this standard with Indexes 6100 and 6200 Series as appropriate.

The Retaining Wall Standard Drawings consist of ***Design Standards*** Index 6010 and companion Data Tables, located in the FDOT Structures Bar Menu as MicroStation CADD cells. These Standard Drawings are intended to work in conjunction with each other and the ***LRFD*** Retaining Wall Program, developed by the Structures Design Office.

Design assumptions used in the development of the Standard Drawings may be found in 'Retaining Wall Notes' within the Program. The Standard Drawings and Program are intended for C-I-P cantilever retaining walls only, not abutments. At a minimum, the EOR should consider the applicability of the following: overall stability, settlement and seismic loading.

The Engineer of Record (EOR) shall be responsible for the Retaining Wall Design in its entirety. The EOR should complete and/or alter the Standard Drawings to suit the particular design. The EOR should consider the appropriateness of the use of the Standard Drawings and Program if the particulars of the design conflict significantly with the assumptions used in the development of the Standard Drawings.

The Standard Drawings are intended to work in conjunction with Retaining Wall Control Drawings located within the Plans. The Control Drawings should define geometrics, locations and other specifics of the Retaining Wall such that when used in conjunction with the Standard Drawings, the Contractor has sufficient information for construction.

Table 6010-1 Durability Requirements for Applicable FDOT Wall Type

Applicable FDOT Wall Types	Durability Requirements		
	Concrete Cover (in.)*	Concrete Class	Pozzolan Additions (Y/N)**
Type 1A	2	II	No
Type 1B	2	IV	No
Type 1C	3	IV	No
Type 1D	3	IV	Yes

* See SDG for concrete cover requirements for external surfaces cast against earth.

** See SDG 1.4.3.G

Plan Content Requirements

Prepare Wall Control Drawings and related drawings as specified in ***SDM*** Chapter 19 and ***PPM*** Vol. 1, Chapter 30, and include them in the plans.

The Program outputs five text files:

- retwall_line1.txt
- retwall_line2.txt
- retwall_line3.txt
- retwall_line4.txt
- retwall_line5.txt - use data to calculate concrete and reinforcing steel quantities.

Text files for lines 1-4 correspond sequentially to the four Retaining Wall Data tables contained in the companion Data Tables for Index 6010. Complete these data tables using the four text files and include the Data Tables in the plans. The text files can be inserted into the tables by using the 'Include' Key-In Utility in MicroStation at the active points in each table. True Type Font, 'FDOT Mono' must be used to align inserted text with table columns.

Complete and add/modify/delete the Retaining Wall Data Table Notes as necessary. If enhanced aesthetics are required, include drawings or reference a texture from Index 5200 in the Retaining Wall Notes.

See Introduction I.3 for more information regarding use of Data Tables.

C-I-P CANTILEVER RETAINING WALLS DATA TABLES

WALL DIMENSIONS — Table Date 01-01-11

Wall No.	Begin		End		Height				Wall Length		D	W	L_{foot}		L_{toe}		Slope Bkwall	D_{soil}		L_{key}	D_{key}	V_{step}	Wall Cover	FtgCov (typ.)	FtgCov (bot.)
					Begin		End																		
	Station	Offset	Station	Offset	ft.	in.	ft.	in.	ft.	in.	in.	in.	ft.	in.	ft.	in.		ft.	in.	in.	in.	in.	in.	in.	in.

BILL OF REINFORCING STEEL — Table Date 01-01-11

Wall No.	Bars J											Bars K											Bars M							
	Size	No.	Spacing	A				B		Average Total Length		Size	No.	Spacing	A				B		Average Total Length		Size	No.	A		B		Total Length	
				Begin		End									Begin		End													
			in.	ft.	in.	ft.	in.	ft.	in.	ft.	in.			in.	ft.	in.	ft.	in.	ft.	in.	ft.	in.			ft.	in.	ft.	in.	ft.	in.

BILL OF REINFORCING STEEL — Table Date 01-01-11

Wall No.	Bars H					Bars G1						Bars R				Bars Z						Bars A							
	Size	No.	Spacing	Length		Size	No.	Spacing	No. of Lap Splices	Total Length		Size	No.	Length		Size	No.	Spacing	Length			Size	No.	Length				Average Length	
																								Begin		End			
			in.	ft.	in.			in.		ft.	in.			ft.	in.			in.	ft.	in.				ft.	in.	ft.	in.	ft.	in.

BILL OF REINFORCING STEEL — Table Date 01-01-11

Wall No.	Bars F									Bars G2				Bars D			
	Size	No.	Spacing	Length				Average Length		Size	No.	Length		Size	No.	Length	
				Begin		End											
			in.	ft.	in.	ft.	in.	ft.	in.			ft.	in.			ft.	in.

NOTES [Notes Date 07-01-14]:

1. Work these Data Tables with Index No. 6010.
2. Concrete Class _____ (f'c = _____ psi) with/without silica fume, metakaolin or ultrafine fly ash.
3. Wall exposed face surface texture shall be _____
4. Environmental Classification is _____.
5. Minimum Soil Nominal Bearing Resistance = _____ psf.
6. A value of '0' for Slope Backwall indicates front and back of wall are parallel.
7. D_{soil} is typical depth of soil and is used for design purposes only. See Control Drawings for actual ground line.
8. Non-zero values for L_{key} and D_{key} indicate the existence of a shear key.
9. A non-zero value for V_{step} indicates the existence of a footing step, see Control Drawings for location.
10. Bars J, K, A and F vary uniformly between begin and end wall heights as indicated by begin and end dimensions.
11. The number of G1 Bars includes 2 additional bars when a shear key is specified.
12. For walls with variable begin/end height, Bars G2 shall be fanned such that they are evenly spaced throughout length of wall.

Payment

Item number	Item description	Unit Measure
400-2-11	Concrete Class II, Retaining Walls	CY
400-4-11	Concrete Class IV, Retaining Walls	CY
415-1-3	Reinforcing Steel - Retaining Wall	LB

Commentary: Retaining Wall quantities shall not include concrete nor reinforcing steel for Index 6100 Series Traffic Railings. See ***Instructions for Design Standards*** *Index 6100 Series for Traffic Railing/Junction Slab Pay Items as required.*

Place concrete and reinforcing steel quantities in the Summary of Wall Quantities box.

Index 6011 Gravity Wall (Rev. 11/16)

Design Criteria

AASHTO LRFD Bridge Design Specifications, 6th Edition; ***Structures Design Guidelines (SDG)***

Design Assumptions and Limitations

Index 6011 has been developed as a self-contained standard having pre-designed wall sections; therefore, no additional reinforcing list is required in the Contract Plans.

Gravity walls are generally most efficient when the difference in height between the ground levels is less than 5 feet. If the difference in height between ground levels is greater than 5 feet, other wall types or project specific designs are required.

Gravity wall design is based on the following soil criteria which covers the majority of soil types found in Florida:

Classification = Cohesion less (Fine Sand)

Friction Angle = 30 Degrees

Moist Unit Weight of Backfill = 120 pcf

Presumptive Allowable Bearing Pressure:

= 2,500 psf for slopes equal to or flatter than 1:1½

= 3,300 psf for slopes steeper than 1: 1½.

Corrected SPT Blow Count for foundation = 10 blows/ft.

(average value within the range of depth from the base of wall to 1.5 x base width below wall).

Max. Seasonal High Water Table (SHWT) is one (1) foot below the horizontal ground surface at the toe of the wall, except as noted.

In cases where the Designer considers the soil at the specific site location to be of lesser strength, an analysis is required to verify that sliding, bearing, overturning and stability requirements are satisfied.

Figures 1, 2 and 3 show the minimum toe berm widths for overall stability with the assumed soil properties listed above. The minimum toe berm width may need to be increased to satisfy other ***PPM*** criteria, such as maintenance access.

Figure 1 Minimum Toe Berm Width for Overall Stability - Scheme 1

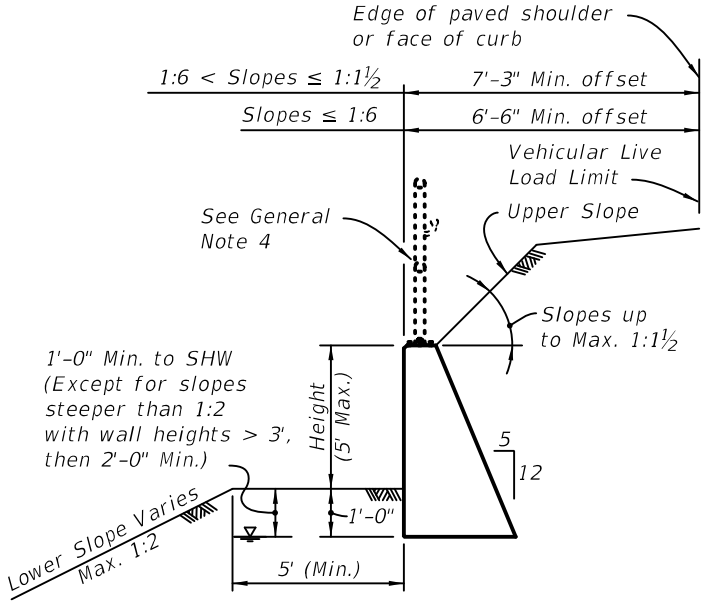

(No Traffic Loading Effects & Upper Slopes ≤ 1:1½)

Figure 2 Minimum Toe Berm Width for Overall Stability - Scheme 2

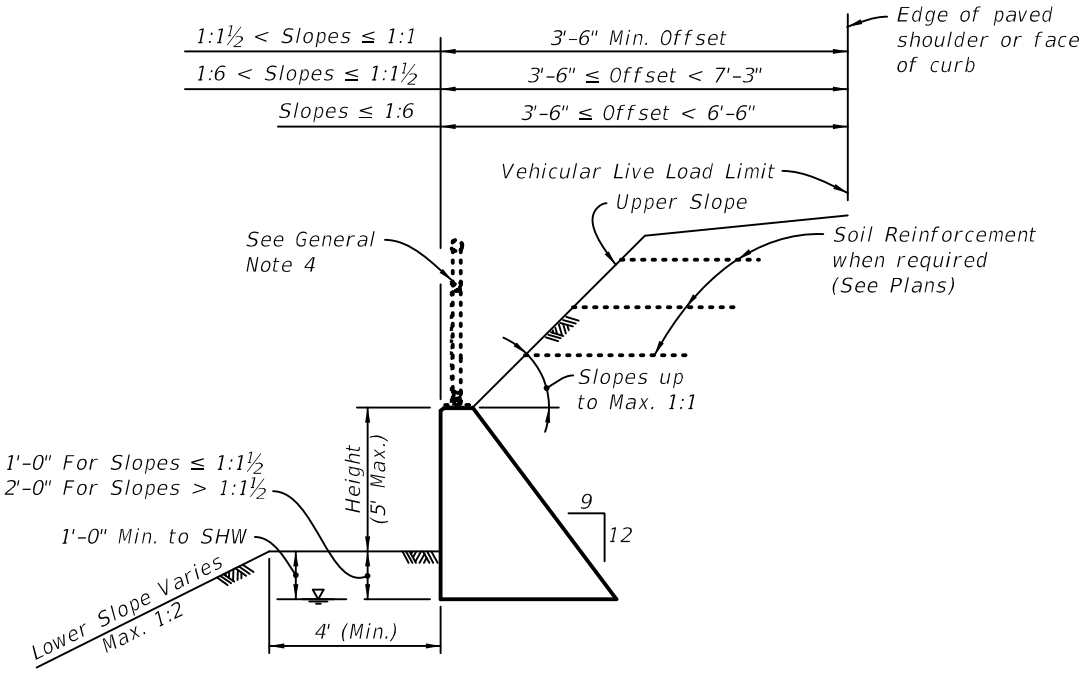

(With Traffic Loading or Upper Slopes > 1:1½)

Figure 3 Minimum Toe Berm Width for Overall Stability - Scheme 3

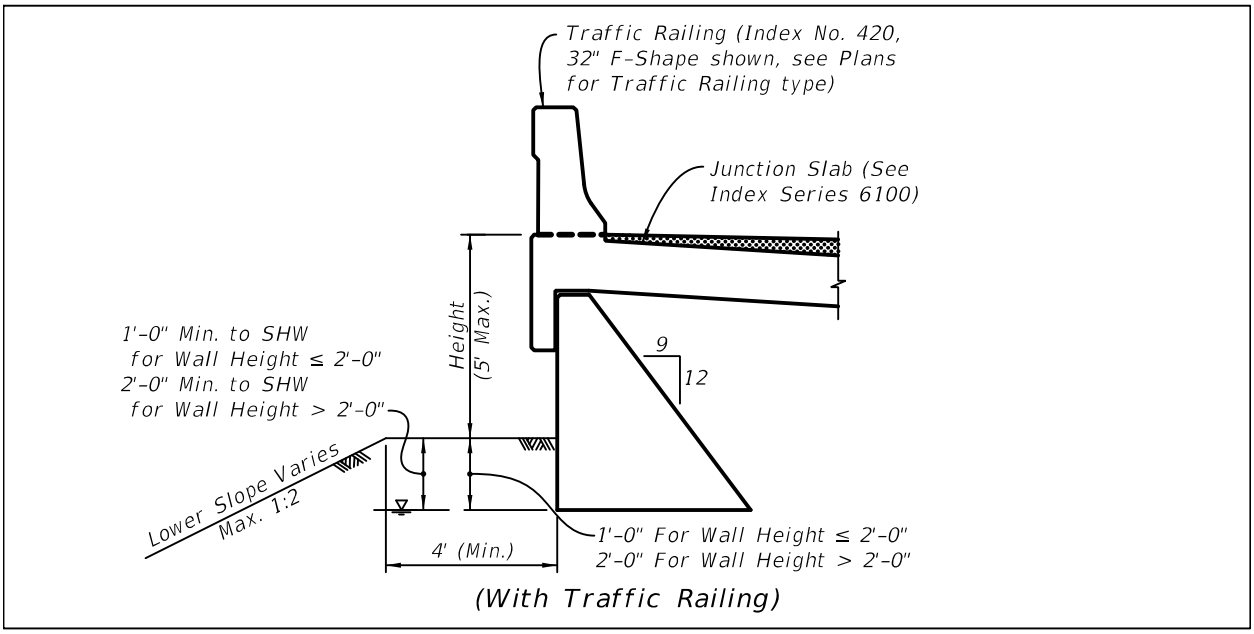

Overall stability of the wall shall be analyzed when:

1. The lower or upper slope exceeds 1:2 (vert. : horiz.);
2. The upper slope exceeds a vertical height of 4'-0" when the lower slope is steeper than 1:6;
3. The seasonal high water (SHW) is less than 2 feet below the ground surface at the toe of the wall; or
4. The SHW is above the toe of the slope for lower slopes steeper than 1:6.

Stability of the upper slope shall be analyzed for slopes steeper than 1:2 (vert. : horiz.) with a minimum Factor of Safety = 1.3.

For Scheme 1 or Scheme 2, when a roadside barrier is required above the wall (guardrail, barrier wall, etc.) the deflection space required for the barrier must be considered. Locate the barrier so that there is no conflict between guardrail posts or barrier footing and the gravity wall or soil reinforcement. This may result in an offset greater than the minimum offset for the live load limit.

Plan Content Requirements

In the Structures or Roadway Plans:

Prepare Wall Control Drawings and related drawings as specified in ***SDM*** Chapter 19 and ***PPM*** Vol. 1, Chapter 30, and include them in the plans.

Add any aesthetic requirements (e.g. coordinating appearance of exposed surface with adjacent walls) to the General Notes.

Reference "Index 6011 Gravity Wall" and Wall Scheme (Scheme 1, Scheme 2 or Scheme 3) in accordance with that shown on the Design Standard.

Where Structures component of plan set is used, place these drawings in the Structures Plans, otherwise, include these drawings in the Roadway Plans. Elevation of wall may not be necessary for short walls or walls on constant grade.

Payment

Item number	Item description	Unit Measure
400-0-11	Concrete Class NS, Gravity Wall	CY

Commentary: See Instructions for Design Standards Index 6100 Series for Traffic Railing/Junction Slab Pay Items as required.

Commentary for Reviewers: Class NS Concrete - This class of concrete was determined to be appropriate for Index 6011 based on consultation with the Structures Design, Roadway Design, State Materials and Construction Offices in 2005 during the LRFD redesign. This class of concrete is an economical choice and structurally appropriate for a non-flexural (gravity) earth retention system.

Index 6020 Permanent MSE Retaining Wall Systems

Design Criteria

AASHTO LRFD Bridge Design Specifications, 6th Edition; ***Structures Design Guidelines (SDG)***; AASHTO-AGC-ARTBA Task Force 27 (Ground Modification Techniques), ***Insitu Soil Improvement Techniques***, January 1990.

Design Assumptions and Limitations

1. It is the responsibility of the Engineer of Record to determine that the maximum factored bearing pressure shown for the wall does not exceed the factored bearing resistance of the foundation for that specific wall location.
2. The wall Company is responsible for the internal stability of the wall. External stability design, including foundation and slope stability, is the responsibility of the Engineer of Record.
3. If there are manholes and/or drop inlets present, design and analysis for both internal and external stability shall be considered. See ***SDG*** Chapter 3 for more details.
4. When a slope is necessary at the base of the front face of the retaining wall, and a flat area meeting the requirements of ***PPM*** Vol. 1, Section 2.4 (10'-0" Min.) cannot be provided, then the flat area can be reduced up to a minimum of 4'-0".

Plan Content Requirements

In the Structures or Roadway Plans:

Prepare Wall Control Drawings and related drawings as specified in ***SDM*** Chapter 19 and ***PPM*** Vol. 1, Chapter 30, and include them in the plans.

Complete the following Data Tables using the following instructions and include the Data Tables on the retaining wall supplemental detail sheets. See Introduction I.3 for more information regarding use of Data Tables.

1. Complete the Notes and add/modify/delete as necessary.
2. List each wall in Note 3 separately, showing applicable wall systems.
3. Complete the "Geotechnical Information" table based on project soil conditions. See ***SDG*** Chapter 3 for required design based internal friction angle and unit weight of Reinforced Soil and Random Backfill.
4. Complete the "Retaining Wall Variables" and "Soil Reinforcement Lengths for External Stability" tables based on project requirements. If the Design High Water Elevation (DHW) is above the adjacent ground surface, include the elevation in the "Retaining Wall Variables" table. Otherwise include "N/A" in the appropriate column in the table. DHW refers to the Mean High Water, Normal High Water or other controlling high water elevation adjacent to the wall. The Wall Heights in the "Soil Reinforcement Lengths for External Stability" table refer to the height above the leveling pad, measured to the top of the wall coping. See ***SDG*** Chapter 3 Figures for details.

5. Transverse Differential Settlement is only applicable for widening of existing embankments.
6. Include the pay item for Polyethylene Sheeting on Concrete Piles per Specification 459 (to minimize downdrag) for all piles and drilled shafts that are located within the wall limits.

PERMANENT MSE RETAINING WALL SYSTEM DATA TABLES

GEOTECHNICAL INFORMATION						Table Date 1-01-11
		Reinforced Soil & Random Backfill	Loose Fine Sand	Firm Fine Sand	Loose Clayey Fine Sand	Firm Clayey Fine Sand
Depth Below Existing Ground Line (ft.)	Wall No. 1	—				
	Wall No. 2	—				
Effective Unit Weight (pcf)						
Cohesion (psf)		0				
Internal Friction Angle						

NOTE:
If the unit weight and/or internal friction angle of the fill proposed by the Contractor differs from that shown above, the Project Engineer will contact both the District Geotechnical Engineer and the Wall Designer for a possible redesign.

RETAINING WALL VARIABLES					Table Date 7-01-13
Wall No.	Wall Settlement				Design High Water Elevation (ft.)
	Long Term Settlement (in.)	Short Term Settlement (in.)	Differential Settlement		
			Longitudinal (%) (ft./100ft.)	Transverse (in.)	
1				N/A	
2				N/A	

NOTE:
Design walls for the settlements noted in the table.
Long term settlement is measured from the end of wall fill placement.
Transverse differential settlement is measured from the face of wall to the end of the soil reinforcement.

SOIL REINFORCEMENT LENGTHS FOR EXTERNAL STABILITY											Table Date 1-01-11
Wall No. 1	Wall Height (ft.)										
	Reinforcement Length (ft.)										
	Factored Bearing Resistance (psf)										
Wall No. 2	Wall Height (ft.)										
	Reinforcement Length (ft.)										
	Factored Bearing Resistance (psf)										

NOTES:
1. The reinforcement strap lengths shown above are the minimum lengths required for external stability. The reinforcement lengths used in the construction of the retaining walls will be the longer of that required for external or internal stability (determined by proprietary wall companies).
2. The Factored Bearing Resistances shown above are the critical (lowest) values from all the load cases analyzed using LRFD methodology.

NOTES [Notes Date 01-01-16]:

1. Concrete facing panel surfaces treatment will be _____ .
2. If required, the soil reinforcement and fasteners for the abutment back wall will be designed and furnished by the proprietary wall company. The soil reinforcement will be designed to resist a factored horizontal load of _____ kips/ft. of back wall width. The cost of soil reinforcement and fasteners (if required) will be included in the cost of the Retaining Wall System.
3. Applicable FDOT Wall Types for each wall location are listed below. See the Approved Products List for approved Wall Systems and Design Standards Index No. 6020 for allowable Wall Type substitutions.
   Wall No. 1 – FDOT Wall Type _____
   Wall No. 2 – FDOT Wall Type _____
4. Concrete for Coping and/or Junction Slab shall be Class _____ (f'c = _____ psi) with/without silica fume, metakaolin or ultrafine fly ash.
5. See Design Standards Index. No. 6020 for General Notes and Details.

Payment

Item number	Item description	Unit Measure
548-12	Retaining Wall System, Permanent, Excluding Barrier	SF
548-14	Retaining Wall System, Permanent - Widening, Attached To Existing Wall	SF
459-71	Polyethylene Sheeting on Concrete Piling	SY

Commentary: See Instructions for Design Standards Index 6100 Series for Traffic Railing/Junction Slab Pay Items as required.

Index 6030 Temporary MSE Retaining Wall Systems

Design Criteria

AASHTO LRFD Bridge Design Specifications, 6th Edition; ***Structures Design Guidelines (SDG)***; AASHTO-AGC-ARTBA Task Force 27 (Ground Modification Techniques), Insitu Soil Improvement Techniques, January 1990.

Design Assumptions and Limitations

See the "Design Criteria" note on the Standard.

Plan Content Requirements

In the Structures or Roadway Plans:

Prepare Control Plans in accordance with the requirements of ***PPM*** Vol. 1, Chapter 30, and include them in the plans.

Complete the following Data Tables using the following instructions and include the Data Tables on the retaining wall supplemental detail sheets. See Introduction I.3 for more information regarding use of Data Tables.

1. Complete the Notes and add/modify/delete as necessary.
2. Complete the "Geotechnical Information" table based on project soil conditions. See ***SDG*** Chapter 3 for required design based internal friction angle and unit weight of Reinforced Soil and Random Backfill.
3. Complete the "Retaining Wall Variables" and "Soil Reinforcement Lengths for External Stability" tables based on project requirements. The Wall Heights in the "Soil Reinforcement Lengths for External Stability" table refer to the height above the foundation soil, measured to the top of the wall. See ***SDG*** Chapter 3 Figures for details.
4. Include the pay item for Polyethylene Sheeting on Concrete Piles per Specification 459 (to minimize downdrag) for all piles and drilled shafts that are located within the wall limits.

TEMPORARY MSE RETAINING WALL SYSTEM DATA TABLES

GEOTECHNICAL INFORMATION						Table Date 1-01-11
		Reinforced Soil & Random Backfill	Loose Fine Sand	Firm Fine Sand	Loose Clayey Fine Sand	Firm Clayey Fine Sand
Depth Below Existing Ground Line (ft.)	Wall No. 1	—				
	Wall No. 2	—				
Effective Unit Weight (pcf)						
Cohesion (psf)		0				
Internal Friction Angle						

NOTE:
If the unit weight and/or internal friction angle of the fill proposed by the Contractor differs from that shown above, the Project Engineer will contact both the District Geotechnical Engineer and the Wall Designer for a possible redesign.

RETAINING WALL VARIABLES				Table Date 7-01-13
Wall No.	Wall Settlement			Air Contaminants Classification
	Long Term Settlement (in.)	Short Term Settlement (in.)	Differential Settlement (%) (ft./100ft.)	
1				
2				

NOTE:
Design walls for the settlements noted in the table.
Long term settlement is measured from the beginning of wall construction.

SOIL REINFORCEMENT LENGTHS FOR EXTERNAL STABILITY												Table Date 1-01-11
Wall No. 1	Wall Height (ft.)											
	Reinforcement Length (ft.)											
	Factored Bearing Resistance (psf)											
Wall No. 2	Wall Height (ft.)											
	Reinforcement Length (ft.)											
	Factored Bearing Resistance (psf)											

NOTES:
1. The reinforcement strap lengths shown above are the minimum lengths required for external stability. The reinforcement lengths used in the construction of the retaining walls will be the longer of that required for external or internal stability (determined by proprietary wall companies).
2. The Factored Bearing Resistances shown above are the critical (lowest) values from all the load cases analyzed using LRFD methodology.

NOTES [Notes Date 07-01-14]:

1. See the Approved Products List for approved Wall Systems (FDOT Wall Type 3).
2. See Design Standards Index No. 6030 for General Notes and Details.

Payment

Item number	Item description	Unit Measure
548-13	Retaining Wall System, Temporary, Excluding Barrier	SF
459-71	Polyethylene Sheeting on Concrete Piling	SY

Index 6040 Precast Concrete Sheet Pile Wall

Design Criteria

AASHTO LRFD Bridge Design Specifications, 6th Edition; ***Structures Design Guidelines (SDG)***

Design Assumptions and Limitations

These piles are typically jetted into place rather than driven like a bearing pile. If shallow rock formations exist within the wall limits, other wall types must be considered.

A cast-in-place reinforced concrete bulkhead cap is required to structurally tie the tops of the concrete sheet piles together and to provide corrosion protection for the reinforcing and prestressing steel that extend from the tops of the piles.

These piles can be used for cantilevered walls or tied-back walls. Project specific designs and details are required for tie-backs. If the length of piles required for a cantilevered wall exceeds the limits shown on the standard drawings, consider using tie-backs.

These piles can be used in all environments with the appropriate concrete admixtures.

The grouted keyway used in combination with plastic filter fabric (the limits of both are defined by dimension "X") are assumed to not be watertight. Thus they contain the soil behind the wall while still allowing groundwater behind the wall to weep through. No other separate weep holes are generally required. The bottom of the "X" dimension is required to be 1'-8" below the mud line.

The tip elevation of piles shall be determined by the Geotechnical Engineer.

See additional information on the Standard Drawing.

Plan Content Requirements

In the Structures or Roadway Plans:

Prepare Wall Control Drawings and related drawings as specified in ***SDM*** Chapter 19 and ***PPM*** Vol. 1, Chapter 30, and include them in the plans. Use combinations of straight and corner piles to accommodate project specific geometric requirements.

Show one Starter Pile location for a given wall. In the Elevation View, show the wall construction sequence proceeding away from the Starter Pile by locating the 11" by 11" corner clip on each Typical Pile on the side farthest away from the Starter Pile. Consider necessary tie-ins with adjacent structures and other boundary restrictions when selecting the Starter Pile location.

Prepare project specific cast-in-place concrete bulkhead cap, tie-back and utility accommodation details and include them in the plans. See Figure 1 for typical cap details. In the Materials Note on the General Notes Sheet, specify the concrete class for the cast-in-place cap in accordance with the retaining wall environment classification. See ***SDG*** 1.4.

Figure 1 Typical Cap Details

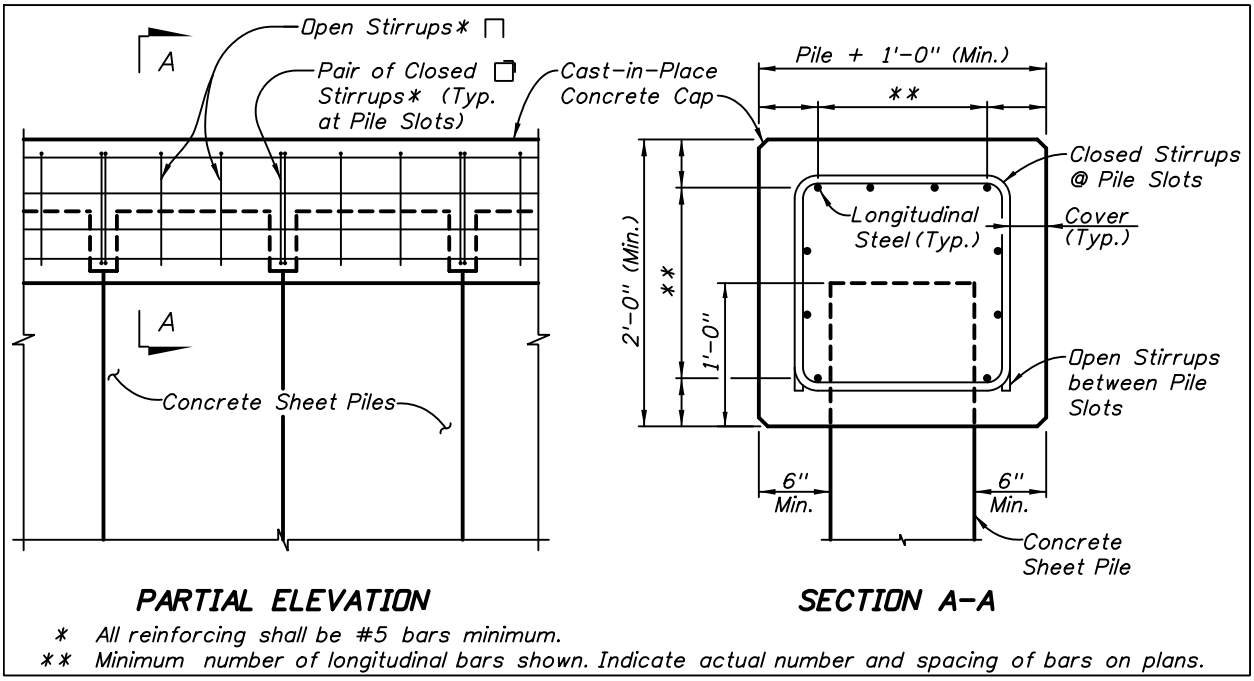

Complete the following "Concrete Sheet Pile Wall with Prestressed Soil Anchors Data Table", "Concrete Sheet Pile Wall with Dead Man Anchors Data Table" or "Concrete Sheet Pile Wall, Cantilever Data Table" as applicable and include it on the supplemental sheets. Complete the Notes and add/modify/delete as necessary. See Introduction I.3 for more information regarding use of Data Tables.

CONCRETE SHEET PILE WALL WITH PRESTRESSED SOIL ANCHORS DATA TABLE																				Table Date 07-01-12
CONSTRUCTION INFORMATION																DESIGN PARAMETERS				
WALL LOCATION		WALL NO.	CONCRETE SHEET PILE FABRICATION						ANCHORS					MINIMUM WALL TIP ELEVATION (ft)	TOP OF WALL ELEV. (ft)	SOIL ELEVATION		WATER ELEVATION		FACTORED DESIGN SURCHARGE LOAD (psf)
STATION (begin to end)	OFFSET (ft)		TYPE (See Detail A)	NUMBER REQUIRED	PILE LENGTH L (ft)	PILE THICKNESS T (in)	GROOVE LENGTH X (ft)	CORNER ANGLE θ (degrees)	MAXIMUM ANCHOR SPACING (ft)	FACTORED ANCHOR LOAD (kips/ft)	SERVICE ANCHOR LOAD (kips/ft)	MINIMUM UNBONDED LENGTH (ft)	INSTALLATION ANGLE BELOW HORIZONTAL (degrees)			* FRONT OF WALL (ft)	BACK OF WALL (ft)	FRONT OF WALL (ft)	BACK OF WALL (ft)	

* Minimum of Design Ground Surface or Design Scour Depth.

NOTES:

1. Work the Data Table with Index No. 6040 and Specification Section 451.
2. Factored Anchor Design Load (kips) = Factored Anchor Load (kips/ft) x Anchor Spacing (ft).
3. Environmental Classification is _____
4. Concrete for cast-in-place retaining wall caps shall be Class _____ (f'c = _____ psi), _____(with/without) silica fume, metakaolin or ultrafine fly ash.

CONCRETE SHEET PILE WALL WITH DEAD MAN ANCHORS DATA TABLE																	Table Date 07-01-12
CONSTRUCTION INFORMATION													DESIGN PARAMETERS				
WALL LOCATION		WALL NO.	CONCRETE SHEET PILE FABRICATION						ANCHORS		MINIMUM WALL TIP ELEVATION (ft)	TOP OF WALL ELEV. (ft)	SOIL ELEVATION		WATER ELEVATION		FACTORED DESIGN SURCHARGE LOAD (psf)
STATION (begin to end)	OFFSET (ft)		TYPE (See Detail A)	NUMBER REQUIRED	PILE LENGTH L (ft)	PILE THICKNESS T (in)	GROOVE LENGTH X (ft)	CORNER ANGLE Ø (degrees)	ANCHOR BAR SPACING (ft)	ANCHOR BAR DIAMETER (in)			* FRONT OF WALL (ft)	BACK OF WALL (ft)	FRONT OF WALL (ft)	BACK OF WALL (ft)	

* Minimum of Design Ground Surface or Design Scour Depth.

NOTES:
1. Work the Data Table with Index No. 6040.
2. Environmental Classification is _____
3. Concrete for cast-in-place retaining wall caps shall be Class _____ (f'c = _____ psi), _____(with/without) silica fume, metakaolin or ultrafine fly ash.

CONCRETE SHEET PILE WALL, CANTILEVER DATA TABLE															Table Date 07-01-12
CONSTRUCTION INFORMATION											DESIGN PARAMETERS				
WALL LOCATION		WALL NO.	TYPE (See Detail A)	NUMBER REQUIRED	PILE LENGTH L (ft)	PILE THICKNESS T (in)	GROOVE LENGTH X (ft)	CORNER ANGLE Ø (degrees)	MINIMUM WALL TIP ELEVATION (ft)	WALL TOP ELEV. (ft)	SOIL ELEVATION		WATER ELEVATION		DESIGN LIVE LOAD (psf)
STATION (begin to end)	OFFSET (ft)										FRONT OF WALL (ft)	BACK OF WALL (ft)	FRONT OF WALL (ft)	BACK OF WALL (ft)	

NOTES:
1. Work the Data Table with Index No. 6040.
2. Environmental Classification is _____
3. Concrete for cast-in-place retaining wall cap shall be Class _____ (f'c = _____ psi), _____ (with/without) silica fume, metakaolin or ultrafine fly ash.

Payment

Item number	Item description	Unit Measure
400-2-8	Concrete Class II, Bulkhead	CY
400-3-8	Concrete Class III, Bulkhead	CY
400-4-8	Concrete Class IV, Bulkhead	CY
415-1-8	Reinforcing Steel - Bulkhead	LB
415-2-8	Reinforcing Steel - Stainless, Bulkhead	LB
451-70-AA	Prestressed Soil Anchor	EA
455-14-AA	Concrete Sheet Piling	LF
455-87	Anchor Bar, Steel	EA

Index 6100 Series Wall Copings and Traffic Railings/Junction Slabs (Rev. 11/16)

Design Criteria

AASHTO LRFD Bridge Design Specifications, 6th Edition; ***Structures Design Guidelines (SDG)***; ***NCHRP Report 663***, Design of Roadside Barrier Systems Placed on MSE Retaining Walls

A combination MSE wall mounted, precast coping / cast-in-place traffic railing similar to the design included throughout this standard series was successfully crash tested at Terre Armee International (France). See report "Field Test of a "GBA" Safety Barrier Erected on a Reinforced Earth Wall", May, 1982.

The details on Index 6110 and 6120 are generally applicable for a TL-4 crash test rating with the 32" traffic railings, and for a TL-5 crash test rating with the 42" traffic railings.

Reinforcing cover for Traffic Railings is shown as 3" for cast in place construction, which accommodates slip forming tolerances. For modified designs 2" minimum cover is usually adequate for stationary form and precast construction.

Design Assumptions and Limitations

This Index Series provides recommended details of various conditions typically encountered at the interface of retaining walls and other components. Work this Index with project specific details for End Bents, drainage structures and other adjacent features, structures or components.

Plan Content Requirements

In the Structures or Roadway Plans:

Show details and/or cross-sections as required in the Plans. Include cross references to traffic/pedestrian railings heights and shapes, but do not reference the traffic/pedestrian railing Index numbers.

Commentary: Standard bridge traffic railings, when installed on junction slabs require modification to the reinforcement; therefore, do not include a reference to the associated traffic railing Index number, but instead, reference the Design Standards for the junction slab/traffic railing combinations within the Index 6100 Series. These Design Standards show the appropriate cross references to the bridge traffic railings and details for the modified reinforcing steel.

Although the reinforcement for the Index 820 pedestrian railing is similar to that shown within Index 6130, in order to allow for the precast option include a reference to Index 6130 only.

Payment

Item number	Item description	Unit Measure
521-6-AB	Concrete Parapet	LF
521-7-1	Concrete Traffic Railing Barrier- Retaining Wall System, F Shape with Sound Barrier Wall, 8' Height	LF
521-8-AA	Concrete Traffic Railing-Wall System, Mounted with Junction Slab	LF

Index 11200 Multi-Column Ground Sign (Rev. 11/16)

Design Criteria

AASHTO LRFD Specifications for Structural Supports for Highway Signs, Luminaires and Traffic Signals (LRFDLTS-1); ***Structures Manual*** Volume 3, FDOT Modifications to LRFDLTS-1; ***Structures Manual Introduction***, I.6 References.

Design Assumptions and Limitations

See notes on the ***Design Standard*** and ***Structures Manual*** Volume 3.

The one directional sign support systems can be used where both columns are within a 7-foot span. Two-post systems with both columns within a 7-foot span must use posts with a mass of 18 lb/ft or less. Larger posts with masses up to 45 lb/ft may also be used as dual post systems but the columns must be more than 7 feet apart. In no case, however, should the total mass of the sign assembly above the slip-plane and below the hinge be greater than 600 pounds.

Use this ***Design Standard*** in conjunction with the FDOT Multi-Post Sign Programs available on the Structures Design Office Website.

Plan Content Requirements

See ***PPM*** Volume 2, Chapter 23.

Payment

Item number	Item description	Unit Measure
700-2-AB	Multi-Post Sign	AS

Index 11300 Overhead Signs (Rev. 11/16)

Design Criteria

AASHTO LRFD Specifications for Structural Supports for Highway Signs, Luminaires and Traffic Signals (LRFDLTS-1); ***Structures Manual*** Volume 3, FDOT Modifications to LRFDLTS-1; ***Structures Manual*** Introduction, I.6 References.

Design Assumptions and Limitations

See ***PPM*** Volume 1, Chapter 29.

Design wind Speed is by County and are based on a maximum height of 32 feet to the centroid of the sign panel and a maximum chord vertical depth of 12 feet.

Overhead luminaire details are in Index 17505.

Plan Content Requirements

See ***PPM*** Volume 2, Chapter 23.

When a sign is to be mounted on the back side of the overhead truss, include a detail for back-side mounting in the plans. Include details for mounting the overhead luminaire to the back side of the truss structure (when lighting is required).

Payment

Cost of sign including the lighting is paid for under:

Item number	Item description	Unit Measure
700-3-ABB	Sign Panel	EA

Index 11310 Cantilever Sign Structure (Rev. 11/16)

Design Criteria

AASHTO LRFD Specifications for Structural Supports for Highway Signs, Luminaires and Traffic Signals (LRFDLTS-1); ***Structures Manual***, Volume 3, FDOT Modifications to LRFDLTS-1.; ***Structures Manual*** Introduction I.6 References; ***Structures Design Guidelines (SDG)***.

Design Assumptions and Limitations

The maximum span length of Cantilever Sign Structures is 50 feet. See the ***PPM***, Volume 1, Chapters 7 and 29 for additional information.

See notes on the ***Design Standard***, ***Structures Manual*** Volume 3 and ***SDG***.

Use this ***Design Standard*** in conjunction with the FDOT Cantilever Overhead Sign Program and Index 11300.

Plan Content Requirements

See ***PPM*** Volume 2, Chapter 23.

Complete the appropriate Cantilever Sign Structures Data Table and include it in the plans. There is a choice of two tables, one for a sign structure with a flat slab foundation and the other for a sign structure with a drilled shaft foundation. Much of the data for inclusion in the table may be found in the FDOT Cantilever Overhead Sign Program output. Include Design Wind Speed and soils information. See Introduction I.3 for more information regarding use of Data Tables.

Table for use with a Spread Footing Foundation:

CANTILEVER SIGN STRUCTURES DATA TABLE — Table Date 07-01-14

SIGN NO.	STATION	DIMENSIONS				PANELS	MEMBER SIZES			BACKRAKE
		A	B		C	N	D (CHORD)	E (WEB)	F (UPRIGHT)	G
		ft	ft	in	in	#	O. D. x Wall Thk. (in)	Angle (in)	O. D. x Wall Thk. (in)	in

NOTES [Notes Date 7-01-13]:
1. Work these Data Tables with Index 11310.
2. Design Wind Speed = ___ mph.
3. Upright wall thickness given is a minimum dimension.

FOUNDATION NOTES [Notes Date 7-01-12]:
1. Design based on Borings taken sealed by _____.
2. Assumptions and Values used in design:
   Soil Type _____
   Soil Layer Thickness = ___ ft.
   Soil Friction Angle = ___ deg.
   Soil Weight = _ _ pcf
   Design Water Table is _ _ ft. below surface

CANTILEVER SIGN STRUCTURES DATA TABLE (CONT.) — Table Date 01-01-11

SIGN NO.	GUSSET PLATES																	TRUSS CONNECTION									SPLICE			
	GA	GB	GC		GD		GE		GF		GG		GH		GJ		GK	TA	TB	TC	TD	TE	TF	TG	TH	TJ	SA	SB	SC	SD
	in	in	ft	in	ft	in	ft	in	ft	in	ft	in	ft	in	ft	in	in	in	#	#	in	in	in	in	in	in	Angle (in)	#	in	#

CANTILEVER SIGN STRUCTURES DATA TABLE (CONT.) — Table Date 01-01-11

SIGN NO.	BASE CONNECTION										ANCHOR		FOOTING DIMENSIONS										FOOTING REINF.				PED. REINF.	
	BA	BB	BC	BD		BE	BF	BG	BH	BJ	BK		FA		FB		FC		FD		FE		FF	FG	FH	FJ	FK	FL
	in	#	in	in	ft	in	in	in	in	in	ft	in	ft	in	ft	in	ft	in	ft	in	ft	in	size	size	size	size	in	# / Size

Table for use with a Drilled Shaft Foundation:

CANTILEVER SIGN STRUCTURES DATA TABLE — Table Date 07-01-14

SIGN NO.	STATION	DIMENSIONS				PANELS	MEMBER SIZES			BACKRAKE
		A	B		C	N	D (CHORD)	E (WEB)	F (UPRIGHT)	G
		ft	ft	in	in	#	O. D. x Wall Thk. (in)	Angle (in)	O. D. x Wall Thk. (in)	in

NOTES [Notes Date 7-01-13]:
1. Work these Data Tables with Index 11310.
2. Design Wind Speed = ___ mph.
3. Upright wall thickness given is a minimum dimension.

FOUNDATION NOTES [Notes Date 7-01-12]:
1. Design based on Borings taken sealed by _____.
2. Assumptions and Values used in design:
   Soil Type _____
   Soil Layer Thickness = ___ ft.
   Soil Friction Angle = ___ deg.
   Soil Weight = ___ pcf
   Design Water Table is ___ ft. below surface

CANTILEVER SIGN STRUCTURES DATA TABLE (CONT.) — Table Date 01-01-11

SIGN NO.	GUSSET PLATES																	TRUSS CONNECTION									SPLICE			
	GA	GB	GC		GD		GE		GF		GG		GH		GJ		GK	TA	TB	TC	TD	TE	TF	TG	TH	TJ	SA	SB	SC	SD
	in	in	ft	in	ft	in	ft	in	ft	in	ft	in	ft	in	ft	in	in	in	#	#	in	in	in	in	in	in	Angle (in)	#	in	#

CANTILEVER SIGN STRUCTURES DATA TABLE (CONT.) — Table Date 07-01-15

SIGN NO.	BASE CONNECTION										ANCHOR		FOOTING - DRILLED SHAFT								
	BA	BB	BC	BD		BE	BF	BG	BH	BJ	BK		FA		FB		FC	FD	FE	FF	FG
	in	#	in	in	ft	in	in	in	in	in	ft	in	ft	in	ft	in	# / Size	#	in	#	in

Payment

Item number	Item description	Unit Measure
700-4-ABC	Overhead Static Sign Structure	EA
700-3-ABB	Sign Panel	EA

Index 11320 Span Sign Structure (Rev. 11/16)

Design Criteria

AASHTO LRFD Specifications for Structural Supports for Highway Signs, Luminaires and Traffic Signals (LRFDLTS-1); ***Structures Manual*** Volume 3, FDOT Modifications to LRFDLTS-1; ***Structures Manual*** Introduction, I.6 References; ***Structures Design Guidelines (SDG)***.

Design Assumptions and Limitations

The maximum span length of Span Sign Structures is 220 feet. See the ***PPM***, Volume 1, Chapter 29 for additional information.

See notes on the ***Design Standard***, ***Structures Manual***, Volume 3 and ***SDG***.

Use this ***Design Standard*** in conjunction with the FDOT Span Overhead Sign Program and Index 11300.

Plan Content Requirements

See ***PPM*** Volume 2, Chapter 23.

Complete the Span Sign Structures Data Table and include it in the plans. Much of the data for inclusion in the table may be found in the FDOT Span Overhead Sign Program output. Include Design Wind Speed and soils information. See Introduction I.3 for more information regarding use of Data Tables.

SPAN SIGN STRUCTURES DATA TABLE													Table Date 01-01-11
SIGN#	STATION	DIMENSIONS			PNLS	MEMBER SIZES						SPLICE		
		A	B	C	D	E	F (CHORD)	G (WEB)	H (LEFT UPRIGHT)	J (RIGHT UPRIGHT)	K (CAMBER)	SA	SB	SC
		ft	ft	ft	#	in	O. D. x Wall Thk. (in)	Angle (in)	O. D. x Wall Thk. (in)	O. D. x Wall Thk. (in)	in	Angle (in)	#	in

SPAN SIGN STRUCTURES DATA TABLE (CONT.)																									Table Date 01-01-11
SIGN#	ALTERNATE SPLICE						GUSSET PLATES																		
	PA	PB	PC	PD	PE	PF	GA	GB	GC		GD		GE		GF		GG		GH		GJ		GK		GL
	in	in	in	in	in	#	in	in	ft	in	ft	in	ft	in	ft	in	ft	in	ft	in	ft	in	ft	in	in

SPAN SIGN STRUCTURES DATA TABLE (CONT.)																	Table Date 01-01-11
SIGN#	LEFT UPRIGHT CONNECTION								RIGHT UPRIGHT CONNECTION								
	LA	LB	LC	LD	LE	LF	LG	LH	RA	RB	RC	RD	RE	RF	RG	RH	
	in	#	in	in	in	in	in	in	in	#	in	in	in	in	in	in	

SPAN SIGN STRUCTURES DATA TABLE (CONT.)																					Table Date 01-01-11
SIGN#	LEFT BASE CONNECTION										RIGHT BASE CONNECTION										
	BA	BB	BC	BD	BE		BF	BG	BH	BJ	CA	CB	CC	CD	CE		CF	CG	CH	CJ	
	in	#	in	in	ft	in	in	in	in	in	in	#	in	in	ft	in	in	in	in	in	

SPAN SIGN STRUCTURES DATA TABLE (CONT.)																	Table Date 07-01-14
SIGN#	LEFT DRILLED SHAFT								RIGHT DRILLED SHAFT								
	DA		DB		DC	DD	DE	DF	FA		FB		FC	FD	FE	FF	
	ft	in	ft	in	# / size	#	in	in	ft	in	ft	in	# / size	#	in	in	

NOTES [Notes Date 7-01-13]:
1. Work these Data Tables with Index 11320.
2. Design Wind Speed = ___ mph
3. Upright wall thickness given is a minimum dimension.
4. Erection is the Contractor's responsibility. To facilitate erection, the Contractor should consider using two vertical lift points, each located near a panel point approximately 20 to 25% of the truss length from each end.
5. 'DC' and 'FC' shall include quantity and size of reinforcing steel.

FOUNDATION NOTES [Notes Date 7-01-12]:
1. Design based on Borings taken sealed by _____.
2. Assumptions and Values used in design:
   Soil Type _____
   Soil Layer Thickness = ___ ft.
   Soil Friction Angle = ___ deg.
   Soil Weight = ___ pcf
   Design Water Table is ___ ft. below surface

Payment

Item number	Item description	Unit Measure
700-4-ABC	Overhead Static Sign Structure	EA
700-3-ABB	Sign Panel	EA

Index 11860 Single Column Ground Signs (Rev. 11/16)

Design Criteria

AASHTO LRFD Specifications for Structural Supports for Highway Signs, Luminaires and Traffic Signals (LRFDLTS-1); ***Structures Manual*** Volume 3, FDOT Modifications to LRFDLTS-1; ***Structures Manual*** Introduction, I.6 References.

Both fabricated and cast base assemblies were impact tested by the ***Texas Transportation Institute***, College station, TX on February 10, 2003, and both alternate assemblies were determined to be compliant with the performance recommendations of the ***National Cooperative Highway Research Program (NCHRP) Report 350***.

Design Assumptions and Limitations

See notes on the ***Design Standard*** and ***Structures Manual*** Volume 3. See also ***PPM*** Volume 1, Chapters 7 and 29.

Design Standards Index 11860 contains instructions for the contractor to select the appropriate post size given the sign dimensions stated in the plans.

The rectangular unidirectional slipbase sign support system can be used with any single post up to a mass of 45 lb/ft.

Foundation designs are based on the following conservative soil criteria which cover the great majority of soil types found in Florida:

Classification = Cohesionless (Fine Sand)
Friction Angle = 30 degrees
Unit Weight = 50 pcf (assumed submerged)

Plan Content Requirements

See ***PPM*** Volume 2, Chapter 23.

Payment

Item number	Item description	Unit Measure
700-1-AB	Single Post Sign	AS

Index 11861 Single Column Cantilever Ground Mounted Signs (Rev. 11/16)

Design Criteria

AASHTO LRFD Specifications for Structural Supports for Highway Signs, Luminaires and Traffic Signals (LRFDLTS-1); ***Structures Manual*** Volume 3, FDOT Modifications to LRFDLTS-1; ***Structures Manual*** Introduction, I.6 References.

Design Assumptions and Limitations

This Index may not be used as a substitute for Index 11200. The custom cantilever sign is only intended for use on curb & gutter facilities where the distance between the curb and the sidewalk restricts the use of Index 11200. The sign location should be checked to insure sufficient area exists behind the sidewalk for the column.

See notes on the ***Design Standard*** and ***Structures Manual*** Volume 3. See also ***PPM*** Volume 1, Chapters 7 and 29.

Design Wind Speed is 110 MPH.

Foundation designs are based on the following conservative soil criteria which cover the great majority of soil types found in Florida:

Classification = Cohesionless (Fine Sand)
Friction Angle = 30 degrees
Unit Weight = 50 pcf (assumed submerged)

Plan Content Requirements

Lay out the text for the sign on the Guide Sign Worksheet. Provide a cross sectional detail of the sign in the plans.

See ***PPM*** Volume 2, Chapter 23. Include cross references to Design Standards Index 11860.

Payment

Item number	Item description	Unit Measure
700-1-74	Single Post Sign, F&I Custom	AS

Index 11870 Single Post Bridge Mounted Sign Support (Rev. 11/16)

Design Criteria

AASHTO LRFD Specifications for Structural Supports for Highway Signs, Luminaires and Traffic Signals (LRFDLTS-1); ***Structures Manual*** Volume 3, FDOT Modifications to LRFDLTS-1; ***Structures Manual*** Introduction, I.6 References; ***Structures Design Guidelines (SDG)***.

Design Assumptions and Limitations

See notes on the ***Design Standard*** and ***Structures Manual*** Volume 3. See also ***PPM*** Volume 1, Chapters 7 and 29. Work this Index with Index 11860.

Limit the use of the Single Post Bridge Mounted Signs to Traffic Railings on Bridges and MSE walls where ground mounting is not feasible and signing cannot be placed outside of their limits.

Tabulated Maximum Sign Area, Dim A and Dim C, are based on a Wind Speed of 110 MPH and a bridge height of 75' above surrounding areas.

Sign Post clearance from front face of barrier is detailed to meet the maximum setback distance requirements of ***SDG*** 6.7. Maximum sign width is 60 inches.

Sign Supports have been detailed for placement on new or existing concrete traffic and pedestrian railings.

Undercut Anchors may be used in lieu of Adhesive bonded Anchors when approved by the DSDE and the State Structures Engineer, on a project-by-project basis. If approved, project specific details will be required in the plans. When using Undercut Anchors, the designer must submit a request to the District Specifications Office to use Developmental Specifications Dev 416 and Dev 937 for Post-installed Anchor Systems which includes provisions for both Adhesive Bonded Anchors and Undercut Anchors. See ***SDG*** 1.6 for more information.

Plan Content Requirements

See ***PPM*** Volume 2, Chapter 23.Label sign support by name or Index number and show minimum distance from gutterline to bottom of the sign or sign cluster.

Payment

Item number	Item description	Unit Measure
700-1-AB	Single Post Sign (Bridge Mount) F&I	AS

Index 11871 Single Post Median Barrier Mounted Sign Support (Rev. 11/16)

Design Criteria

AASHTO LRFD Specifications for Structural Supports for Highway Signs, Luminaires and Traffic Signals (LRFDLTS-1); ***Structures Manual*** Volume 3, FDOT Modifications to LRFDLTS-1; ***Structures Manual*** Introduction, I.6 References; ***Structures Design Guidelines (SDG)***

Design Assumptions and Limitations

See notes on ***Design Standards***, Index 11871, the ***Plans Preparation Manual (PPM)***, Volume 1, Sections 4.5 and 7.2.5.

Do not use this Index for mounting permanent signs to shoulder traffic railings unless there is insufficient room to accommodate the use of Index 11870.

For permanent signs, tabulated maximum sign areas and corresponding post diameters are based on a wind speed of 110 mph installed on barriers less than 30 feet above surrounding areas. Base plates Type A and B are sized for permanent installations and designed for a wind speed of up to 110 mph when installed on existing FDOT Standard concrete traffic railings with ¾" diameter anchor bolts.

Temporary sign post and plate Type C designs are based on a wind speed of 80 mph with a maximum 24 square foot sign. These sign structures are designed for temporary placement on all standard FDOT barriers, including installations on the temporary concrete barriers in Indexes 414 and 415.

Anchorage details are for Adhesive Bonded Anchors. Undercut Anchors may be used in lieu of Adhesive Bonded Anchors when approved by the DSDE and the State Structures Engineer, on a project-by-project basis. If approved, project specific details will be required in the plans. When using Undercut Anchors, the designer must submit a request to the District Specifications Office to use Developmental Specifications Dev 416 and Dev 937 for Post-installed Anchor Systems which includes provisions for both Adhesive Bonded Anchors and Undercut Anchors. See ***SDG*** 1.6 for more information.

Plan Content Requirements

For Permanent Signs:

See ***PPM*** Volume 2, Chapter 23.

For all Temporary/Work Zone Signs:

Use ***Design Standards*** Index 600 to layout sign locations in the plans. ***Design Standards*** Index 600 requires signs to be post mounted. When post mounted criteria cannot be met, the Designer must use ***Design Standards*** Index 11871, show the location of the barrier mounted signs in the plans, and include the pay item for barrier mounted work zone signs. However, to reduce the amount of barrier mounted work zone signs, modify the sign spacing as allowed by Index 600.

Payment

Item number	Item description	Unit Measure
700-1-AB	Single Post Sign, F & I Barrier Wall Mounted	AS
102-62	Barrier Mounted Work Zone Sign	ED

Index 17347 Bicycle Markings

Design Criteria

Manual on Uniform Traffic Control Devices, 2009 V. 2.16; ***Plans Preparation Manual (PPM)*** Volume 1, Chapter 8

Design Assumptions and Limitations

See ***PPM***, Chapter 8, for detailed criteria on the selection of appropriate bicycle facility types.

Plan Content Requirements

In the Roadway Plans, provide the following information:

1. Provide values for any variables not provided in the Index, such as lane widths or other dimensions.
2. Bus Bay details per criteria in the FDOT ***Accessing Transit Design Handbook for Florida Bus Passenger Facilities***. This Index addresses only the required details for bicycle keyhole design at bus bays.
3. Show Intersection Keyhole design as follows:
   - For Signing and Marking Plans, show Keyhole drawings in the plans by using the Keyhole details shown in this Index as guidelines
   - For plans without Signing and Marking Sheets, indicate appropriate Keyhole Type in a Keyhole Type Assignment Table. Show the intersection, station number or other appropriate locator along with the keyhole option (KH1-KH4.) Use the following Keyhole Type Assignment Table as an example:

Keyhole (KH) Type Assignment Table	
Intersection	**Design Standards Index 17347 Keyhole Type (KH-X)**
Main Street and 1st Ave	KH-3
Main Street and Sawgrass Way	KH-2
Main Street and 3rd Ave	KH-2
...	...

Payment

Item number	Item description	Unit Measure
711-14-160	Thermoplastic, Preformed, White, Message	EA
711-14-170	Thermoplastic, Preformed, White, Arrows	EA
711-15-111	Thermoplastic, Standard-Open Graded Asphalt Surfaces, White, Solid, 6"	NM
711-16-111	Thermoplastic, Standard-Other Surfaces, White, Solid, 6"	NM

Index 17502 High Mast Lighting (Rev. 11/16)

Design Criteria

AASHTO LRFD Specifications for Structural Supports for Highway Signs, Luminaires and Traffic Signals (LRFDLTS-1); ***Structures Manual*** Volume 3, FDOT Modifications to LRFDLTS-1; ***Structures Manual*** Introduction, I.6 References.

Design Assumptions and Limitations

See notes on the ***Design Standard*** and ***Structures Manual*** Volume 3.

Poles are designed for up to a 6 mil galvanization thickness.

Foundations are based upon the following conservative soil criteria (which covers the majority of soil types found in Florida)

Classification = Cohesionless (Fine Sand)
Friction Angle = 30 degrees
Unit Weight = 50 pcf (Submerged)

Only in cases where the Designer considers the soil types at the specific site location to be of lesser strength properties should an analysis be required. Auger borings, SPT borings or CPT soundings may be utilized as needed to verify the assumed soil properties, and at relatively uniform sites, a single boring or sounding may cover several foundations. Furthermore, borings in the area that were performed for other purposes may be used to confirm the assumed soil properties.

Plan Content Requirements

See ***PPM*** Volume 2, Chapter 25.

Payment

Item number	Item description	Unit Measure
715-19-ABC	High Mast Light Pole, Complete	EA

Index 17505 External Lighting for Signs (Rev. 11/16)

Design Criteria

AASHTO LRFD Specifications for Structural Supports for Highway Signs, Luminaires and Traffic Signals (LRFDLTS-1); ***Structures Manual*** Volume 3, FDOT Modifications to LRFDLTS-1.

Design Assumptions and Limitations

Use external lighting for overhead signs only when required. For guidance see ***PPM*** Volume 1, Chapter 7.

Design wind speed is 170 MPH, and is applied in one direction at a time while mounted at 32 feet or less above the surrounding terrain. Luminaire is LED with maximum weight of 38 lbs and an EPA (estimated pressure area) of 2.35 sf. Assembly with luminaire is mounted to two steel pipes attached directly to the vertical I beams that support the overhead sign. Mounting of the horizontal pipes close to a horizontal Z bar (wind bar) is to limit prying action. Turning mechanism is for maintenance of the sign and luminaire. Design for the assembly including luminaire with the shear pin removed and rotated 90 degrees, was checked for a maximum 80 mph wind load.

Horizontal distance measured from the front of sign panel to the center of the luminaire is a maximum of 6 ft. The centerline of the light is 1 ft below bottom of the sign panel. Maximum distance from the bottom connection (horizontal pipe) is 6 ft above the bottom of the sign.

Plan Content Requirements

Include a completed Guide Sign Worksheet, with luminaire spacing and arm length, and height of sign. See ***PPM***, Volume 1, Chapter 7 and Volume 2, Chapter 23.

Payment

Include cost of the steel pipe assembly including the luminaire, mounting plates, screws and U-bolts in the cost of the overhead sign panel.

Item number	Item description	Unit Measure
700-3-ABB	Sign Panel	EA

Index 17515 Standard Aluminum Lighting (Rev. 11/16)

Design Criteria

AASHTO LRFD Specifications for Structural Supports for Highway Signs, Luminaires and Traffic Signals (LRFDLTS-1); ***Structures Manual*** Volume 3, FDOT Modifications to LRFDLTS-1; ***Structures Manual*** Introduction, I.6 References.

Design Assumptions and Limitations

See notes on the ***Design Standard*** and ***Structures Manual*** Volume 3.

Fixture Mounting Height is defined in the Lighting Design Requirements.

The design weight of luminaire is 75 lbs, and the equivalent projected area (EPA) of the luminaire is 1.55 square feet.

Foundations are based upon the following conservative soil criteria (which covers the majority of soil types found in Florida)

Classification = Cohesionless (Fine Sand)
Friction Angle = 30 degrees
Unit Weight = 50 pcf (Submerged)

Only in cases where the Designer considers the soil types at the specific site to be of lesser strength properties should an analysis be required. Auger borings, SPT borings or CPT soundings may be utilized as needed to verify the assumed soil properties, and at relatively uniform sites, a single boring or sounding may cover several foundations. Borings in the area that were performed for other purposes may be used to confirm the assumed soil properties.

Unique site circumstances where poorer soil conditions are encountered may require custom foundation designs.

Standard Roadway Aluminum Light Poles:

Design Mounting Height is the height measured from the top of the foundation to the light fixture.

Fill Height is the height measured from the natural ground line adjacent to the poles to the top of the foundation.

Wind Height is measured from the natural ground elevation adjacent to the poles, to the light fixture; therefore, the *Wind Height at Fixture* is equal the *Design Mounting Height* plus the *Fill Height*, rounded up to the next highest 5-foot increment.

Design Mounting Heights in the Standard are 30-feet, 35-feet, 40-feet, 45-feet or 50-feet with either a Top Mounted fixture or a Single Arm fixture (arm lengths of 8', 10', or 12').

Mounting on walls or bridges is not permitted.

Fill Height above surrounding terrain is limited to 25 feet.

Median Barrier Mounted Aluminum Light Poles:

Design Mounting Height is the distance from finished grade to the light fixture.

Fill Height is the height measured from the natural ground line adjacent to the poles or the mean high water to the finished grade at the pole base.

Wind Height is measured from the natural ground elevation adjacent to the poles or from the mean water elevation (as appropriate), to the light fixture; therefore, the *Wind Height at Fixture* is equal the *Design Mounting Height* plus the *Fill Height*, rounded up to the next highest 5-foot increment.

Median Barrier Mounted Light Poles on cylindrical or spread footings are applicable for fill levels up to 70 feet (Wind Height of 110 feet or less).

Design Mounting Height is 40 ft. and can be used with Single or Double Arms of 8', 10' or 12' lengths. For Lighting on bridges, locate light poles near substructure supports to minimize vibration of light poles due to traffic.

Plan Content Requirements

See ***PPM***, Volume 2, Chapter 25.

Payment

Item number	Item description	Unit Measure
715-4-ABC	Light Pole, Complete	EA

Index 17723 Steel Strain Pole (Rev. 11/16)

Design Criteria

AASHTO LRFD Specifications for Structural Supports for Highway Signs, Luminaires and Traffic Signals (LRFDLTS-1); ***Structures Manual*** Volume 3, FDOT Modifications to LRFDLTS-1; ***Structures Manual*** Introduction, I.6 References.

Design Assumptions and Limitations

The maximum span length for the Steel Strain Poles with Signal Cable is 250 feet. See the ***PPM***, Volume 1, Chapter 29 for more information.

See notes on the ***Design Standard*** and ***Structures Manual*** Volume 3.

Use this ***Design Standard*** in conjunction with the following design programs available for use on the Structures Design Office Website:

- FDOT Strain Pole Program
- University of Florida Bridge Software Institute ATLAS Program

Foundation designs are based on the following conservative soil criteria which cover the great majority of soil types found in Florida:

Classification = Cohesionless (Fine Sand)
Friction Angle = 30 degrees
Unit Weight = 50 pcf (assumed submerged)

When the designer considers soil types at the specific site location to be of lesser strength properties than shown above, an analysis is required. Auger borings, SPT borings, or CPT soundings may be used as needed to verify the assumed soil properties, and at sites confirmed to be uniform, a single boring or sounding may cover several foundations. Borings in the area that were performed for other purposes may be used to confirm the assumed soil properties.

Plan Content Requirements

See ***PPM*** Volume 2, Chapter 24.

Payment

Item number	Item description	Unit Measure
649-1-ABC	Steel Strain Pole	EA

Index 17725 Concrete Poles (Rev. 11/16)

Design Criteria

AASHTO LRFD Specifications for Structural Supports for Highway Signs, Luminaires and Traffic Signals (LRFDLTS-1); ***Structures Manual*** Volume 3, FDOT Modifications to LRFDLTS-1; ***Structures Manual*** Introduction, I.6 References.

Design Assumptions and Limitations

The maximum span length for the Concrete Poles with Signal Cable is 250 feet. See the ***PPM***, Volume 1, Chapter 29 for more information.

See notes on the ***Design Standard*** and ***Structures Manual*** Volume 3.

The following computer-based design programs available for use on the Structures Design Office Website:

- FDOT Strain Pole Program
- University of Florida Bridge Software Institute ATLAS Program

For Pole Types P-III through P-VIII, design poles within the following limits:

30 ft. ≤ Length (L) ≤ 65 ft.

Pole Height (H) ≤ 50 ft.

Foundation Depth (D) ≥ 7 ft.

Determine maximum loads to be placed on poles, and select the required pole type meeting the requirements of Table 17725-I and Table 17725-2 below.

Table 17725-1 Service Moment Capacity, M_s^*, at Finish Grade

H (feet)	Type of Strain Pole				
	P-IV (kip-ft)	P-V (kip-ft)	P-VI (kip-ft)	P-VII (kip-ft)	P-VIII (kip-ft)
20	21	86	121	165	204
22	24	90	126	171	210
24	26	93	131	176	215
26	29	97	135	182	221
28	32	101	140	187	227
30	34	104	144	192	232
32	37	108	149	197	238
34	39	111	153	202	243
36	41	114	157	207	248
38	44	117	161	212	253
40	46	120	165	217	258
42	48	123	169	221	263
44	50	126	173	226	268
46	52	129	177	230	272
48	54	132	180	235	277
50	56	135	184	239	281

* $M_s \geq$ MDL, where MDL = moment due to dead load only

Table 17725-2 Ultimate Moment Capacity, Ø M_n^*, at Finish Grade

H (feet)	Type of Strain Pole				
	P-IV (kip-ft)	P-V (kip-ft)	P-VI (kip-ft)	P-VII (kip-ft)	P-VIII (kip-ft)
20	43	138	198	273	346
22	48	145	206	283	357
24	53	151	215	294	369
26	58	158	224	304	381
28	63	165	232	315	392
30	68	172	241	325	404
32	73	178	250	335	415
34	77	185	258	346	427
36	82	192	267	356	439
38	87	199	276	367	450
40	92	205	284	377	462
42	97	212	293	387	474
44	102	219	302	398	485
46	107	226	310	408	497
48	112	232	319	419	508
50	117	239	328	429	520

* Ø $M_n \geq$ Mu

Plan Content Requirements

Complete the "Strain Pole Schedule" provided with the FDOT CAD Bar Menu and include in the Roadway Plans.

See ***PPM*** Volume 2, Chapter 24.

Payment

Item number	Item description	Unit Measure
641-2-AB	Prestressed Concrete Poles	EA

Index 17743 Standard Mast Arm Assemblies (Rev. 11/16)

Design Criteria

AASHTO LRFD Specifications for Structural Supports for Highway Signs, Luminaires and Traffic Signals, 1st Edition (LRFDLTS-1); ***Structures Manual*** Volume 3, FDOT Modifications to ***LRFDLTS-1***; ***Structures Manual*** Introduction, I.6 References.

Design Assumptions and Limitations

The maximum span length of Standard Mast Arm Assemblies is 78 feet. See the ***PPM***, Volume 1, Chapter 29 for additional information. Mast Arm usage must comply with ***PPM***, Volume 1, Section 7.4.10.

See notes on the ***Design Standard*** and ***Structures Manual*** Volume 3.

Design all mast arm assemblies with backplates in accordance with the ***PPM***, Volume 1, Section 7.4.15

Standard mast arm assemblies comply with the minimum requirements and design criteria shown on ***Design Standards*** Index 17745.

Standard Mast Arm assemblies may be single arm, single arm with luminaire, double arms or double arms with luminaire. Standard double arms are limited to arm orientations of 90° or 270° only.

The FDOT Signs and Signals Excel Program will provide design loads and arm, pole and foundation capacities which the designer can use to choose arm type(s), pole type and foundation type. Available arm(s) and pole combinations are shown in the Mast Arm Combinations Tables.

Standard foundation capacities are based on the following soil criteria:

Classification:	Cohesionless (Fine Sand)
Friction Angle:	30 Degrees
Unit Weight:	50 pcf (assumed submerged)
N-blowcount:	15

When the designer considers soil types at the specific site location to be of lesser strength properties than shown above, an analysis is required. Auger borings, SPT borings, or CPT soundings may be used as needed to verify the assumed soil properties, and at sites confirmed to be uniform, a single boring or sounding may cover several foundations. Borings in the area that were performed for other purposes may be used to confirm the assumed soil properties. The Geotechnical Engineer must justify the differing soil criteria to the District Structures Design Engineer during the design phase of the project.

If only Standard arm(s), pole and foundation are used, shop drawings are not required.

Plan Content Requirements

The signal designer completes the Mast Arm Tabulation Sheets, and the structures designer completes the Standard Mast Arm Assemblies Data Table, both of which will be included in the plans. These are the only plan sheets required for mast arm assemblies which meet the Department's Standard. The structures data table may be placed on a signal plan sheet, if space permits. Mast arm assemblies that do not meet the mast arm standard will require a special design (See Index 17745). See Introduction I.3 for more information regarding use of Data Tables.

The following instructions are for use with the Mast Arm Tabulation Sheets:

1. Each mast arm assembly is identified by a unique ID number.
2. Dimensions 1-5 are for signals and dimensions A-E are for signs. Record the distance from the edge of the pole, at ground level, to the center of the signal or sign.
3. Signals may be mounted vertically or horizontally. Indicate the mounting in the appropriate column in the table.
4. The entire line for arm #2 and the space for the angle between dual arms are left blank for single arm assemblies.
5. All arms and poles will be galvanized. If a color is required, indicate the color in the table, otherwise leave blank.
6. Starting at the pole, select the signals and/or signs that match the configuration you are tabulating. The spaces representing the signs or signals not used will be blank. Example 1: If no sign is located between the pole and signal 1, the spaces for Sign A would be blank. Example 2: A configuration for three signals and one sign between signal 1 and signal 2 - Only the spaces for signals 1, 2, 3 and sign B would be completed; the others will be blank.
7. Record the number of sections in each signal head in the space following the distance to that head.
8. Record the height and width of each sign in the space following the distance to the sign.
9. When double arm poles are used for a skewed intersection, the standard design should be used whenever possible. The standard orientation for arm #2 is 90 or 270 degrees measured in a counter clockwise direction from arm #1. The normal orientation of the mast arm is perpendicular to the roadway. Adjustments in mounting hardware can compensate for a skew angle of approximately 15 degrees or more from the normal, depending upon the attachment method. The designer should verify the mounting hardware capability before specifying an arm with a skew greater than 15 degrees.
10. The arm mounting height should be calculated to provide a minimum vertical clearance of 17'-6" from the roadway crown elevation to the lowest sign or signal. A standard signal section is approximately 14" square. Therefore the length of a 3-section head is about 42" and a 5-section is about 70". The use of back plates will add about 6" to each side of the signal head. Additionally, approximately 3" should be added to the end of the signal head to compensate for the attachment hardware. The

designer should coordinate with the maintaining agency to insure the signal assembly and all appropriate hardware has been considered in determining the vertical clearance. The maintaining agency can also provide guidance on the vertical or horizontal mounting of the signal assemblies. This information may be used to determine the arm mounting height.

11. The standard handhole location is 90 degrees from arm #1 facing away from traffic. Other handhole locations must be noted in the Special Instructions.

12. The "Special Instructions" Table is used to tabulate pedestrian buttons and pedestrian signal locations and handhole locations when the handholes are not in the standard location. Tabulate the ID No. and the orientation of the pedestrian buttons and signals in degrees measured counter clockwise from arm #1. The handhole location should be left blank if the handhole is in the standard location (see note 11).

13. Arm #1 is the arm for a single arm assembly or the longer arm for a double arm assembly. If the arms are equal length, arm #1 is over the project roadway.

STANDARD MAST ARM ASSEMBLIES DATA TABLE											Table Date 11-01-16
STRUCTURE ID NUMBERS	DESIGNATION	FIRST ARM		SECOND ARM		UF (deg)	LL (deg)	POLE			DRILLED SHAFT ID
		ARM ID	FAA (ft.)	ARM ID	SAA (ft.)			POLE ID	UAA (ft.)	UB (ft.)	

NOTES [Notes Date 11-01-16]:

1. If an entry appears in column FAA, a shorter arm is required. This is obtained by removing length from the arm tip and the arm length shortened from FA to FAA. SAA Similar.

2. If an entry appears in column UAA, a shorter pole is required. This is obtained by removing length from the pole tip and the pole height shortened from UA to UAA.

3. Arm mounting height UB must be between 18-22 feet.

4. Pole types P2 and larger require a minimum 4.5 foot diameter drilled shaft. Pole types P5 and larger require a minimum 5.0 foot diameter drilled shaft.

5. Work this sheet with the Signal Designer's "Mast Arm Tabulation". See "Mast Arm Tabulation" for special instructions that include non-standard Handhole location, paint color, terminal compartment requirement, and pedestrian features.

6. Work with Index 17743 and 17745.

Mast Arm Tabulation Sheet 1 of 2

SPECIAL INSTRUCTIONS					
ID NO.	PED. BUTTON		PED. SIGNALS		HANDHOLE LOCATION

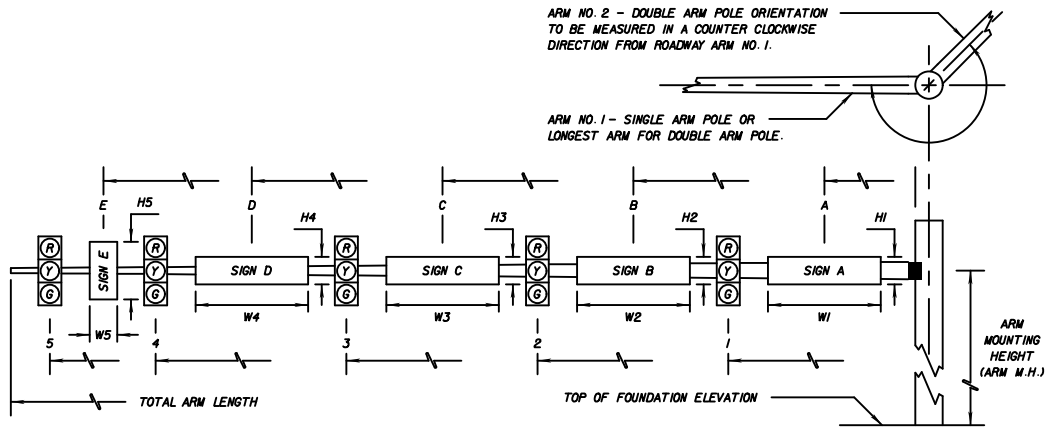

* DENOTES NUMBER OF SECTIONS IN SIGNAL HEAD ASSEMBLY

						SIGNAL DATA																SIGN DATA															
									DISTANCE FROM POLE													DISTANCE FROM POLE / HEIGHT AND WIDTH OF SIGN															
ID NO.	SHEET NO.	LOCATION BY STA.	TOP OF FOUNDATION ELEVATION	RDWY ARM NO.	CROWN ELEV.	SIGNAL V/H	BACK PLATES Y/N	PED. SIGNAL Y/N	1	*	2	*	3	*	4	*	5	*	TOTAL ARM LENGTH	ARM M.H.	∠ BETWEEN DUAL ARMS 90/270	A	H1	W1	B	H2	W2	C	H3	W3	D	H4	W4	E	H5	W5	PAINT COLOR
				1																																	
				2																																	
				1																																	
				2																																	
				1																																	
				2																																	
				1																																	
				2																																	
				1																																	
				2																																	
				1																																	
				2																																	
				1																																	
				2																																	
				1																																	
				2																																	
				1																																	
				2																																	
				1																																	
				2																																	
				1																																	
				2																																	
				1																																	
				2																																	
				1																																	
				2																																	
				1																																	
				2																																	

Mast Arm Tabulation Sheet 2 of 2

* DENOTES NUMBER OF SECTIONS IN SIGNAL HEAD ASSEMBLY

						SIGNAL DATA																SIGN DATA															
									DISTANCE FROM POLE													DISTANCE FROM POLE / HEIGHT AND WIDTH OF SIGN															
ID NO.	SHEET NO.	LOCATION BY STA.	TOP OF FOUNDATION ELEVATION	RDWY ARM NO.	CROWN ELEV.	SIGNAL Y/N	BACK PLATES Y/N	PED. SIGNAL Y/N	1	*	2	*	3	*	4	*	5	*	TOTAL ARM LENGTH	ARM W.H.	∠ BETWEEN DUAL ARMS 90/270	A	H1	W1	B	H2	W2	C	H3	W3	D	H4	W4	E	H5	W5	PAINT COLOR
				1																																	
				2																																	
				1																																	
				2																																	
				1																																	
				2																																	
				1																																	
				2																																	
				1																																	
				2																																	
				1																																	
				2																																	
				1																																	
				2																																	
				1																																	
				2																																	
				1																																	
				2																																	
				1																																	
				2																																	
				1																																	
				2																																	
				1																																	
				2																																	
				1																																	
				2																																	
				1																																	
				2																																	
				1																																	
				2																																	
				1																																	
				2																																	
				1																																	
				2																																	
				1																																	
				2																																	
				1																																	
				2																																	

SPECIAL INSTRUCTIONS					
ID NO.	PED. BUTTON		PED. SIGNALS		HANDHOLE LOCATION

SPECIAL INSTRUCTIONS					
ID NO.	PED. BUTTON		PED. SIGNALS		HANDHOLE LOCATION

SPECIAL INSTRUCTIONS					
ID NO.	PED. BUTTON		PED. SIGNALS		HANDHOLE LOCATION

SPECIAL INSTRUCTIONS					
ID NO.	PED. BUTTON		PED. SIGNALS		HANDHOLE LOCATION

Payment

Item number	Item description	Unit Measure
649-3A-BCC	Steel Mast Arm Assembly	EA

Examples

EXAMPLE 1

1. Select Arm and Pole Combination.

   Select A40/S - P2/S from the Mast Arm Combinations Tables.
   Use FDOT Signs and Signals Excel Program to verify adequacy of arm and pole.
   Specify shorter arm, enter 36 under FAA.
   Leave Second Arm, UF and LL blank as there is no second arm or luminaire.

2. Determine Arm Mounting Height.

   UB + 10' = 12.5' + 17.5'min. + 2'

   UB = 22' min. Use 22'

3. Select Drilled Shaft ID.

   Select DS/12/4.5.
   Use FDOT Signs and Signals Excel Program to verify adequacy of foundation.

EXAMPLE 2

1. Select Arms and Pole Combination.

   Select A60/D - A40/D - P4/D from the Mast Arm Combinations Tables.
   Use FDOT Signs and Signals Excel Program to verify adequacy of arms and pole.
   Specify shorter arms, enter 27.5 under FAA for First Arm.
   FAA = FA - (60' - 52') = 35.5' - 8' = 27.5'

2. Enter angle between arms.

   Angle UF is measured counter-clockwise from the First Arm and must be either 90° or 270°.

3. Specify shorter Pole.

   Enter 23.5 under UAA.

4. Determine Arm Mounting Height.

   UB + 10' = 9.5' + 17.5' min. + 2'

   UB = 19' min. Use 20'

5. Select Drilled Shaft ID.

   Select DS/16/4.5
   Use FDOT Signs and Signals Excel Program to verify adequacy of foundation.

EXAMPLE 1

Single Arm Structure as shown,
130 mph Wind Speed with Signal Backplates.

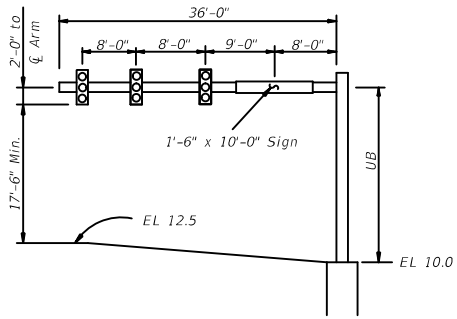

EXAMPLE 2

First Arm Structure as shown, Second Arm same as Example 1
except 150 mph Wind Speed with Signal Backplates.

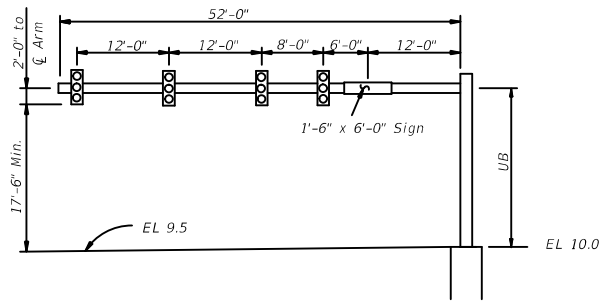

STANDARD MAST ARM ASSEMBLIES DATA TABLE											Table Date 11-01-16
STRUCTURE ID NUMBERS	DESIGNATION	FIRST ARM		SECOND ARM		UF (deg)	LL (deg)	POLE			DRILLED SHAFT ID
		ARM ID	FAA (ft.)	ARM ID	SAA (ft.)			POLE ID	UAA (ft.)	UB (ft.)	
Example 1	A40/S - P2/S	A40/S	36					P2/S		22	DS/12/4.5
Example 2	A60/D - A40/D - P4/D	A60/D	27.5	A40/D	36	90		P4/D	23.5	20	DS/16/4.5

NOTES [Notes Date 11-01-16]:

1. If an entry appears in column FAA, a shorter arm is required. This is obtained by removing length from the arm tip and the arm length shortened from FA to FAA. SAA Similar.
2. If an entry appears in column UAA, a shorter pole is required. This is obtained by removing length from the pole tip and the pole height shortened from UA to UAA.
3. Arm mounting height UB must be between 18-22 feet.
4. Pole types P2 and larger require a minimum 4.5 foot diameter drilled shaft. Pole types P5 and larger require a minimum 5.0 foot diameter drilled shaft.
5. Work this sheet with the Signal Designer's "Mast Arm Tabulation". See "Mast Arm Tabulation" for special instructions that include non-standard Handhole location, paint color, terminal compartment requirement, and pedestrian features.
6. Work with Index 17743 and 17745.

SPECIAL INSTRUCTIONS					
ID NO.	PED. BUTTON		PED. SIGNALS		HANDHOLE LOCATION

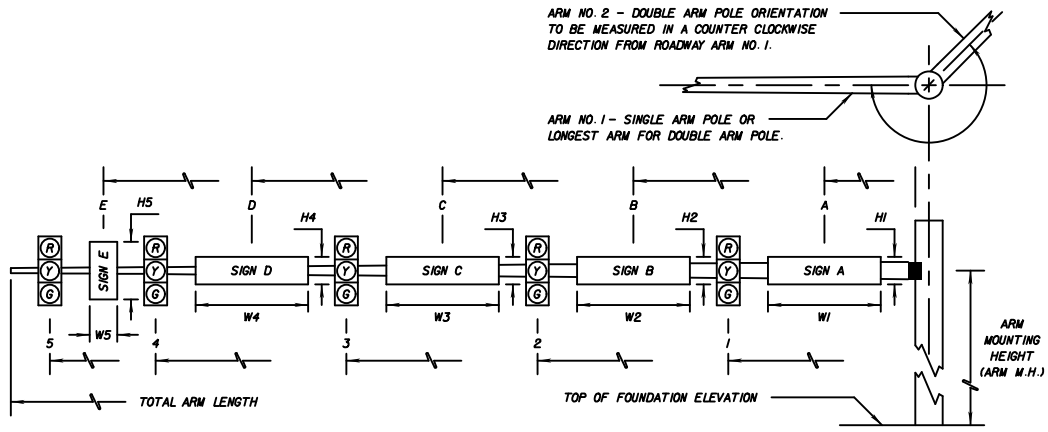

* DENOTES NUMBER OF SECTIONS IN SIGNAL HEAD ASSEMBLY

| | | | | | | SIGNAL DATA | | | | | |

Design Aids

30 Foot Mast Arm Combinations						
Arm 1 Length	**Arm 2 Length**	**Regular or Heavy Duty**	**Luminaire?**	**Designation**		
30'	N/A	Reg	No	A30/S		P1/S
			Yes	A30/S		P1/S/L
		HD	No	A30/S/H		P1/S
			Yes	A30/S/H		P1/S/L
	30'	Reg/Reg	No	A30/D	A30/D	P2/D
			Yes	A30/D	A30/D	P2/D/L
		Reg/HD	No	A30/D	A30/D/H	P2/D
			Yes	A30/D	A30/D/H	P2/D/L
		HD/Reg	No	A30/D/H	A30/D	P2/D
			Yes	A30/D/H	A30/D	P2/D/L
		HD/HD	No	A30/D/H	A30/D/H	P2/D
			Yes	A30/D/H	A30/D/H	P2/D/L
30 foot Mast Arm Total = 12						

40 Foot Mast Arm Combinations						
Arm 1 Length	**Arm 2 Length**	**Regular or Heavy Duty**	**Luminaire?**	**Designation**		
40'	N/A	Reg	No	A40/S		P2/S
			Yes	A40/S		P2/S/L
		HD	No	A40/S/H		P2/S
			Yes	A40/S/H		P2/S/L
	30'	Reg/Reg	No	A40/D	A30/D	P2/D
			Yes	A40/D	A30/D	P2/D/L
		Reg/HD	No	A40/D	A30/D/H	P2/D
			Yes	A40/D	A30/D/H	P2/D/L
		HD/Reg	No	A40/D/H	A30/D	P2/D
			Yes	A40/D/H	A30/D	P2/D/L
		HD/HD	No	A40/D/H	A30/D/H	P2/D
			Yes	A40/D/H	A30/D/H	P2/D/L
	40'	Reg/Reg	No	A40/D	A40/D	P2/D
			Yes	A40/D	A40/D	P2/D/L
		Reg/HD	No	A40/D	A40/D/H	P2/D
			Yes	A40/D	A40/D/H	P2/D/L
		HD/Reg	No	A40/D/H	A40/D	P2/D
			Yes	A40/D/H	A40/D	P2/D/L
		HD/HD	No	A40/D/H	A40/D/H	P2/D
			Yes	A40/D/H	A40/D/H	P2/D/L
40 foot Mast Arm Total = 20						

50 Foot Mast Arm Combinations						
Arm 1 Length	**Arm 2 Length**	**Regular or Heavy Duty**	**Luminaire?**	**Designation**		
50'	N/A	Reg	No	A50/S		P3/S
			Yes	A50/S		P3/S/L
		HD	No	A50/S/H		P3/S
			Yes	A50/S/H		P3/S/L
	30'	Reg/Reg	No	A50/D	A30/D	P3/D
			Yes	A50/D	A30/D	P3/D/L
		Reg/HD	No	A50/D	A30/D/H	P3/D
			Yes	A50/D	A30/D/H	P3/D/L
		HD/Reg	No	A50/D/H	A30/D	P3/D
			Yes	A50/D/H	A30/D	P3/D/L
		HD/HD	No	A50/D/H	A30/D/H	P3/D
			Yes	A50/D/H	A30/D/H	P3/D/L
	40'	Reg/Reg	No	A50/D	A40/D	P3/D
			Yes	A50/D	A40/D	P3/D/L
		Reg/HD	No	A50/D	A40/D/H	P3/D
			Yes	A50/D	A40/D/H	P3/D/L
		HD/Reg	No	A50/D/H	A40/D	P3/D
			Yes	A50/D/H	A40/D	P3/D/L
		HD/HD	No	A50/D/H	A40/D/H	P3/D
			Yes	A50/D/H	A40/D/H	P3/D/L
	50'	Reg/Reg	No	A50/D	A50/D	P3/D
			Yes	A50/D	A50/D	P3/D/L
		Reg/HD	No	A50/D	A50/D/H	P3/D
			Yes	A50/D	A50/D/H	P3/D/L
		HD/Reg	No	A50/D/H	A50/D	P3/D
			Yes	A50/D/H	A50/D	P3/D/L
		HD/HD	No	A50/D/H	A50/D/H	P3/D
			Yes	A50/D/H	A50/D/H	P3/D/L
50 foot Mast Arm Total = 28						

60 Foot Mast Arm Combinations						
Arm 1 Length	**Arm 2 Length**	**Regular or Heavy Duty**	**Luminaire?**	**Designation**		
60'	N/A	Reg	No	A60/S		P4/S
			Yes	A60/S		P4/S/L
		HD	No	A60/S/H		P4/S
			Yes	A60/S/H		P4/S/L
	30'	Reg/Reg	No	A60/D	A30/D	P4/D
			Yes	A60/D	A30/D	P4/D/L
		Reg/HD	No	A60/D	A30/D/H	P4/D
			Yes	A60/D	A30/D/H	P4/D/L
		HD/Reg	No	A60/D/H	A30/D	P4/D
			Yes	A60/D/H	A30/D	P4/D/L
		HD/HD	No	A60/D/H	A30/D/H	P4/D
			Yes	A60/D/H	A30/D/H	P4/D/L
	40'	Reg/Reg	No	A60/D	A40/D	P4/D
			Yes	A60/D	A40/D	P4/D/L
		Reg/HD	No	A60/D	A40/D/H	P4/D
			Yes	A60/D	A40/D/H	P4/D/L
		HD/Reg	No	A60/D/H	A40/D	P4/D
			Yes	A60/D/H	A40/D	P4/D/L
		HD/HD	No	A60/D/H	A40/D/H	P4/D
			Yes	A60/D/H	A40/D/H	P4/D/L
	50'	Reg/Reg	No	A60/D	A50/D	P4/D
			Yes	A60/D	A50/D	P4/D/L
		Reg/HD	No	A60/D	A50/D/H	P4/D
			Yes	A60/D	A50/D/H	P4/D/L
		HD/Reg	No	A60/D/H	A50/D	P4/D
			Yes	A60/D/H	A50/D	P4/D/L
		HD/HD	No	A60/D/H	A50/D/H	P4/D
			Yes	A60/D/H	A50/D/H	P4/D/L
	60'	Reg/Reg	No	A60/D	A60/D	P5/D
			Yes	A60/D	A60/D	P5/D/L
		Reg/HD	No	A60/D	A60/D/H	P5/D
			Yes	A60/D	A60/D/H	P5/D/L
		HD/Reg	No	A60/D/H	A60/D	P5/D
			Yes	A60/D/H	A60/D	P5/D/L
		HD/HD	No	A60/D/H	A60/D/H	P5/D
			Yes	A60/D/H	A60/D/H	P5/D/L
60 foot Mast Arm Total = 36						

70 Foot Mast Arm Combinations						
Arm 1 Length	**Arm 2 Length**	**Regular or Heavy Duty**	**Luminaire?**	**Designation**		
70'	N/A	Reg	No	A70/S		P5/S
			Yes	A70/S		P5/S/L
		HD	No	A70/S/H		P5/S
			Yes	A70/S/H		P5/S/L
	30'	Reg/Reg	No	A70/D	A30/D	P5/D
			Yes	A70/D	A30/D	P5/D/L
		Reg/HD	No	A70/D	A30/D/H	P5/D
			Yes	A70/D	A30/D/H	P5/D/L
		HD/Reg	No	A70/D/H	A30/D	P5/D
			Yes	A70/D/H	A30/D	P5/D/L
		HD/HD	No	A70/D/H	A30/D/H	P5/D
			Yes	A70/D/H	A30/D/H	P5/D/L
	40'	Reg/Reg	No	A70/D	A40/D	P5/D
			Yes	A70/D	A40/D	P5/D/L
		Reg/HD	No	A70/D	A40/D/H	P5/D
			Yes	A70/D	A40/D/H	P5/D/L
		HD/Reg	No	A70/D/H	A40/D	P5/D
			Yes	A70/D/H	A40/D	P5/D/L
		HD/HD	No	A70/D/H	A40/D/H	P5/D
			Yes	A70/D/H	A40/D/H	P5/D/L
	50'	Reg/Reg	No	A70/D	A50/D	P5/D
			Yes	A70/D	A50/D	P5/D/L
		Reg/HD	No	A70/D	A50/D/H	P5/D
			Yes	A70/D	A50/D/H	P5/D/L
		HD/Reg	No	A70/D/H	A50/D	P5/D
			Yes	A70/D/H	A50/D	P5/D/L
		HD/HD	No	A70/D/H	A50/D/H	P5/D
			Yes	A70/D/H	A50/D/H	P5/D/L
	60'	Reg/Reg	No	A70/D	A60/D	P6/D
			Yes	A70/D	A60/D	P6/D/L
		Reg/HD	No	A70/D	A60/D/H	P6/D
			Yes	A70/D	A60/D/H	P6/D/L
		HD/Reg	No	A70/D/H	A60/D	P6/D
			Yes	A70/D/H	A60/D	P6/D/L
		HD/HD	No	A70/D/H	A60/D/H	P6/D
			Yes	A70/D/H	A60/D/H	P6/D/L

70 Foot Mast Arm Combinations						
Arm 1 Length	**Arm 2 Length**	**Regular or Heavy Duty**	**Luminaire?**	**Designation**		
70'	70'	Reg/Reg	No	A70/D	A70/D	P6/D
			Yes	A70/D	A70/D	P6/D/L
		Reg/HD	No	A70/D	A70/D/H	P6/D
			Yes	A70/D	A70/D/H	P6/D/L
		HD/Reg	No	A70/D/H	A70/D	P6/D
			Yes	A70/D/H	A70/D	P6/D/L
		HD/HD	No	A70/D/H	A70/D/H	P6/D
			Yes	A70/D/H	A70/D/H	P6/D/L
70 foot Mast Arm Total = 44						

78 Foot Mast Arm Combinations						
Arm 1 Length	**Arm 2 Length**	**Regular or Heavy Duty**	**Luminaire?**	**Designation**		
78'	N/A	Reg	No	A78/S		P6/S
			Yes	A78/S		P6/S/L
		HD	No	A78/S/H		P6/S
			Yes	A78/S/H		P6/S/L
	30'	Reg/Reg	No	A78/D	A30/D	P6/D
			Yes	A78/D	A30/D	P6/D/L
		Reg/HD	No	A78/D	A30/D/H	P6/D
			Yes	A78/D	A30/D/H	P6/D/L
		HD/Reg	No	A78/D/H	A30/D	P6/D
			Yes	A78/D/H	A30/D	P6/D/L
		HD/HD	No	A78/D/H	A30/D/H	P6/D
			Yes	A78/D/H	A30/D/H	P6/D/L
	40'	Reg/Reg	No	A78/D	A40/D	P6/D
			Yes	A78/D	A40/D	P6/D/L
		Reg/HD	No	A78/D	A40/D/H	P6/D
			Yes	A78/D	A40/D/H	P6/D/L
		HD/Reg	No	A78/D/H	A40/D	P6/D
			Yes	A78/D/H	A40/D	P6/D/L
		HD/HD	No	A78/D/H	A40/D/H	P6/D
			Yes	A78/D/H	A40/D/H	P6/D/L

78 Foot Mast Arm Combinations						
Arm 1 Length	**Arm 2 Length**	**Regular or Heavy Duty**	**Luminaire?**	**Designation**		
78'	50'	Reg/Reg	No	A78/D	A50/D	P6/D
			Yes	A78/D	A50/D	P6/D/L
		Reg/HD	No	A78/D	A50/D/H	P6/D
			Yes	A78/D	A50/D/H	P6/D/L
		HD/Reg	No	A78/D/H	A50/D	P6/D
			Yes	A78/D/H	A50/D	P6/D/L
		HD/HD	No	A78/D/H	A50/D/H	P6/D
			Yes	A78/D/H	A50/D/H	P6/D/L
	60'	Reg/Reg	No	A78/D	A60/D	P6/D
			Yes	A78/D	A60/D	P6/D/L
		Reg/HD	No	A78/D	A60/D/H	P6/D
			Yes	A78/D	A60/D/H	P6/D/L
		HD/Reg	No	A78/D/H	A60/D	P6/D
			Yes	A78/D/H	A60/D	P6/D/L
		HD/HD	No	A78/D/H	A60/D/H	P6/D
			Yes	A78/D/H	A60/D/H	P6/D/L
	70'	Reg/Reg	No	A78/D	A70/D	P7/D
			Yes	A78/D	A70/D	P7/D/L
		Reg/HD	No	A78/D	A70/D/H	P7/D
			Yes	A78/D	A70/D/H	P7/D/L
		HD/Reg	No	A78/D/H	A70/D	P7/D
			Yes	A78/D/H	A70/D	P7/D/L
		HD/HD	No	A78/D/H	A70/D/H	P7/D
			Yes	A78/D/H	A70/D/H	P7/D/L
	78'	Reg/Reg	No	A78/D	A78/D	P7/D
			Yes	A78/D	A78/D	P7/D/L
		Reg/HD	No	A78/D	A78/D/H	P7/D
			Yes	A78/D	A78/D/H	P7/D/L
		HD/Reg	No	A78/D/H	A78/D	P7/D
			Yes	A78/D/H	A78/D	P7/D/L
		HD/HD	No	A78/D/H	A78/D/H	P7/D
			Yes	A78/D/H	A78/D/H	P7/D/L
78 foot Mast Arm Total = 52						

Index 17745 Mast Arm Assemblies (Rev. 11/16)

Design Criteria

AASHTO LRFD Specifications for Structural Supports for Highway Signs, Luminaires and Traffic Signals (LRFDLTS-1); ***Structures Manual*** Volume 3, FDOT Modifications to LRFDLTS-1; ***Structures Manual*** Introduction, I.6 References.

Design Assumptions and Limitations

See notes on the ***Design Standard*** and ***Structures Manual*** Volume 3.

See the ***PPM***, Volume 1, Chapter 29 for additional information.

Design all mast arm traffic signal assemblies with backplates in accordance with the ***PPM***, Volume 1, Chapter 7.

Custom Mast Arm Designs: Special Mast arms for unique loadings and/or geometric constraints that contain any component (arm or pole) that is outside the range of those in Index 17743.

The FDOT Mast Arm Program will provide the necessary variables to be shown in the "Special Mast Arm Assemblies Data Table" cell from the FDOT CADD Menu.

Plan Content Requirements

The signal designer completes the Mast Arm Tabulation Sheet, and the structures designer completes the Special Mast Arm Assemblies Data Table, both of which will be included in the plans. These are the only plan sheets required for mast arm assemblies which meet the Department's Standard. The structures data table may be placed on a signal plan sheet, if space permits. See Introduction I.3 for more information regarding use of Data Tables.

The following instructions are for use with the Mast Arm Tabulation Sheet:

1. Each mast arm assembly is identified by a unique ID number.
2. Dimensions 1-5 are for signals and dimensions A-E are for signs. Record the distance from the edge of the pole, at ground level, to the center of the signal or sign.
3. Signals may be mounted vertically or horizontally. Indicate the mounting in the appropriate column in the table.
4. The entire line for arm #2 and the space for the angle between dual arms are left blank for single arm assemblies.
5. All arms and poles will be galvanized. If a color is required, indicate the color in the table, otherwise leave blank.
6. Starting at the pole, select the signals and/or signs that match the configuration you are tabulating. The spaces representing the signs or signals not used will be blank.

Example 1: If no sign is located between the pole and signal 1, the spaces for Sign A would be blank. Example 2: A configuration for three signals and one sign between signal 1 and signal 2 - Only the spaces for signals 1, 2, 3 and sign B would be completed; the others will be blank.

7. Record the number of sections in each signal head in the space following the distance to that head.

8. Record the height and width of each sign in the space following the distance to the sign.

9. When double arm poles are used for a skewed intersection, the standard design should be used whenever possible. The standard orientation for arm #2 is 90 or 270 degrees measured in a counter clockwise direction from arm #1. The normal orientation of the mast arm is perpendicular to the roadway. Adjustments in mounting hardware can compensate for a skew angle of approximately 15 degrees or more from the normal, depending upon the attachment method. The designer should verify the mounting hardware capability before specifying an arm with a skew greater than 15 degrees.

10. The arm mounting height should be calculated to provide a minimum vertical clearance of 17'-6" from the roadway crown elevation to the lowest sign or signal. A standard signal section is approximately 14" square. Therefore the length of a 3-section head is about 42" and a 5-section is about 70". The use of back plates will add about 6" to each side of the signal head. Additionally, approximately 3" should be added to the end of the signal head to compensate for the attachment hardware. This information may be used to determine the arm mounting height. The designer should coordinate with the maintaining agency to insure the signal assembly and all appropriate hardware has been considered in determining the vertical clearance. The maintaining agency can also provide guidance on the vertical or horizontal mounting of the signal assemblies.

11. The standard handhole location is 90 degrees from arm #1. Other handhole locations must be noted in the Special Instructions.

12. A free swinging internally illuminated street name sign may be attached to the pole by an independent bracket arm if the sign area does not exceed 18 square feet and weigh more than 144 pounds. The Structures Design Engineer must review other signs attached to the pole or any size sign of this type attached to the signal mast arm.

13. The "Special Instructions" Table is used to tabulate pedestrian buttons and pedestrian signal locations and handhole locations when the handholes are not in the standard location. Tabulate the ID No. and the orientation of the pedestrian buttons and signals in degrees measured counter clockwise from arm #1. The handhole location should be left blank if the handhole is in the standard location (see note 11).

14. Arm #1 is the arm for a single arm assembly or the longer arm for a double arm assembly. If the arms are equal length, arm #1 is over the project roadway.

SPECIAL MAST ARM ASSEMBLIES DATA TABLE

Table Date 01-01-12

NUMBER OF LOCATIONS	STRUCTURE NUMBER	FIRST ARM				FIRST ARM EXTENSION				SECOND ARM				SECOND ARM EXTENSION				POLE						
		FA(ft)	FB(in)	FC(in)	FD(in)	FE(ft)	FF(in)	FG(in)	FH(in)	SA(ft)	SB(in)	SC(in)	SD(in)	SE(ft)	SF(in)	SG(in)	SH(in)	UA(ft)	UB(ft)	UC(in)	UD(in)	UE(in)	UF(deg)	UG(ft)

SPECIAL MAST ARM ASSEMBLIES DATA TABLE (CONT.)

Table Date 01-01-12

STRUCTURE NUMBER	FIRST ARM CONNECTION (in) First Arm Camber Angle = 2 Degrees											SECOND ARM CONNECTION (in) Second Arm Camber Angle = 2 Degrees										
	#Bolts	HT	FJ	FK	FL	FN	FO	FP	FR	FS	FT	#Bolts	HT	SJ	SK	SL	SN	SO	SP	SR	SS	ST

SPECIAL MAST ARM ASSEMBLIES DATA TABLE (CONT.)

Table Date 07-01-15

STRUCTURE NUMBER	POLE BASE CONNECTION (in)					SHAFT AND REINF.								LUMINAIRE AND LUMINAIRE CONNECTION										
	#Bolts	BA	BB	BC	BF	DA(ft)	DB(ft)	RA	RB	RC	RD(in)	RE	RF(in)	LA(ft)	LB(ft)	LC(in)	LD(in)	LE	LF(ft)	LG(in)	LH(in)	LJ(in)	LK(in)	LL(deg)

NOTES (Notes Date 07-01-13):
1. Work with Index 17745.
2. Design Wind Speed = mph

FOUNDATION NOTES (Notes Date 01-01-12):
1. Design based on Borings taken
   sealed by
2. Assumptions and Values used in design:
   Soil Type
   Soil Layer Thickness = ft.
   Soil Friction Angle = deg.
   Soil Weight = pcf
   Design Water Table is ft. below surface

Mast Arm Tabulation Sheet 1 of 2

SPECIAL INSTRUCTIONS					
ID NO.	PED. BUTTON		PED. SIGNALS		HANDHOLE LOCATION

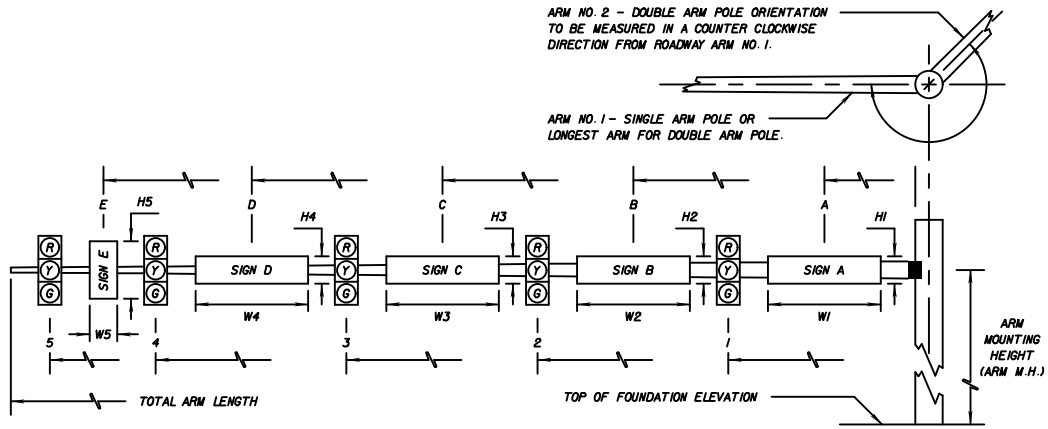

* DENOTES NUMBER OF SECTIONS IN SIGNAL HEAD ASSEMBLY

						SIGNAL DATA																SIGN DATA															
									DISTANCE FROM POLE													DISTANCE FROM POLE / HEIGHT AND WIDTH OF SIGN															
ID NO.	SHEET NO.	LOCATION BY STA.	TOP OF FOUNDATION ELEVATION	RDWY ARM NO.	CROWN ELEV.	SIGNAL V/H	BACK PLATES Y/N	PED. SIGNAL Y/N	1	*	2	*	3	*	4	*	5	*	TOTAL ARM LENGTH	ARM M.H.	∠ BETWEEN DUAL ARMS 90/270	A	H1	W1	B	H2	W2	C	H3	W3	D	H4	W4	E	H5	W5	PAINT COLOR
				1																																	
				2																																	
				1																																	
				2																																	
				1																																	
				2																																	
				1																																	
				2																																	
				1																																	
				2																																	
				1																																	
				2																																	
				1																																	
				2																																	
				1																																	
				2																																	
				1																																	
				2																																	
				1																																	
				2																																	
				1																																	
				2																																	
				1																																	
				2																																	
				1																																	
				2																																	

Mast Arm Tabulation Sheet 2 of 2

* DENOTES NUMBER OF SECTIONS IN SIGNAL HEAD ASSEMBLY

						SIGNAL DATA															SIGN DATA														
									DISTANCE FROM POLE												DISTANCE FROM POLE / HEIGHT AND WIDTH OF SIGN														
ID NO.	SHEET NO.	LOCATION BY STA.	TOP OF FOUNDATION ELEVATION	RDWY ARM NO.	CROWN ELEV.	SIGNAL Y/N	BACK PLATES Y/N	PED. SIGNAL Y/N	1	*	2	*	3	*	4	*	5	*	TOTAL ARM LENGTH	ARM W.H.	∠ BETWEEN DUAL ARMS 90/270	A	H1	W1	B	H2	W2	C	H3	W3	D	H4	W4	E	H5	W5	PAINT COLOR
				1																																	
				2																																	
				1																																	
				2																																	
				1																																	
				2																																	
				1																																	
				2																																	
				1																																	
				2																																	
				1																																	
				2																																	
				1																																	
				2																																	
				1																																	
				2																																	
				1																																	
				2																																	
				1																																	
				2																																	
				1																																	
				2																																	
				1																																	
				2																																	
				1																																	
				2																																	
				1																																	
				2																																	
				1																																	
				2																																	
				1																																	
				2																																	
				1																																	
				2																																	
				1																																	
				2																																	
				1																																	
				2																																	
				1																																	
				2																																	

SPECIAL INSTRUCTIONS					
ID NO.	PED. BUTTON		PED. SIGNALS		HANDHOLE LOCATION

SPECIAL INSTRUCTIONS					
ID NO.	PED. BUTTON		PED. SIGNALS		HANDHOLE LOCATION

SPECIAL INSTRUCTIONS					
ID NO.	PED. BUTTON		PED. SIGNALS		HANDHOLE LOCATION

SPECIAL INSTRUCTIONS					
ID NO.	PED. BUTTON		PED. SIGNALS		HANDHOLE LOCATION

Payment

Item number	Item description	Unit Measure
649-3A-BCC	Steel Mast Arm Assembly	EA

Index 17900 Traffic Monitoring Site

Plan Content Requirements

Show on the Plan & Profile Sheets the proposed locations for Traffic Monitoring Sites (TMS). Show the loop layout, location of axle sensors, and cabinet locations on the Roadway Plan Sheet. If the scale of the Plan Sheet is too large to detail the site features, use a separate Detail Sheet to detail the features of the TMS.

Payment

Include the pay items for the TMS in Category 0200 - Roadway.

Item number	Item description	Unit Measure
695-1	TMS Vehicle Axle Sensor	EA
695-2	TMS Vehicle Non-Intrusive Vehicle Sensor	EA
695-3	TMS Vehicle Speed Classification Unit	AS
695-4	TMS Wireless Magnetometer Sensor	EA
695-5	TMS Solar Power Unit	EA
695-6	TMS Inductive Loop Assembly	EA
695-7	TMS Cabinet	EA
695-8	TMS System Communication Modem	EA

Index 18111 Steel CCTV Pole (Rev. 11/16)

Design Criteria

AASHTO LRFD Specifications for Structural Supports for Highway Signs, Luminaires and Traffic Signals (LRFDLTS-1); ***Structures Manual*** Volume 3, FDOT Modifications to LRFDLTS-1; ***Structures Manual*** Introduction, I.6 References.

Design Assumptions and Limitations

See notes on the ***Design Standard*** and ***Structures Manual*** Volume 3.

The steel CCTV poles are designed for:

1. 170 mph wind speed with a 700 year Mean Recurrence Interval (MRI),
2. A one inch maximum deflection in a 40 mph wind speed (3 second gust), and
3. A maximum camera effective projected area (EPA) of 5.6 square feet total with a maximum camera weight of 240 pounds total.

Foundations are assumed to be in level ground. For foundation within slopes 5H:1V and greater, increase the foundation depth in accordance with the table below. For values in-between those shown in the table, use the higher value.

Additional Shaft Depth Due to Ground Slope (feet)

Ground Slope	Drilled Shaft Diameter (feet)	
	4	**5**
5H:1V	3	4
4H:1V	4	5
3H:1V	5	6
2H:1V	7	9

Wind load is calculated assuming a maximum fill height of 5 feet. Do not use the design tables for fill heights more than 5 feet.

Foundations and base plates are designed based on the following soil criteria:

Classification:	Cohesionless (Fine Sand)
Friction Angle:	30 Degrees
Unit Weight:	50 lbs/cubic foot (assumed submerged)

When the designer considers soil types at the specific site location to be of lesser strength properties than shown above, an analysis is required. Auger borings, SPT borings, or CPT soundings may be used as needed to verify the assumed soil properties, and at sites confirmed to be uniform, a single boring or sounding may cover several foundations. Borings in the area that were performed for other purposes may be used to confirm the assumed soil properties.

Plan Content Requirements

See ***PPM***, Volume 2, Chapter 29.

Payment

The cost of providing the foundation and any incidental items incurred in furnishing and installing this CCTV structure shall be included in the pay item for providing the complete CCTV structure.

Item number	Item description	Unit Measure
785-1-12	ITS Pole, F&I, Steel - With Lowering Device	EA
785-1-14	ITS Pole, F&I, Steel - Without Lowering Device	EA

Index 18113 Concrete CCTV Pole (Rev. 11/16)

Design Criteria

AASHTO LRFD Specifications for Structural Supports for Highway Signs, Luminaires and Traffic Signals (LRFDLTS-1); ***Structures Manual*** Volume 3, FDOT Modifications to LRFDLTS-1; ***Structures Manual*** Introduction, I.6 References.

Design Assumptions and Limitations

See notes on the ***Design Standard*** and ***Structures Manual*** Volume 3.

The concrete CCTV poles are designed for:

1. 170 mph wind speed with a 700 year Mean Recurrence Interval (MRI),
2. A one inch maximum deflection in a 40 mph wind speed (3 second gust), and
3. A maximum camera effective projected area (EPA) of 5.6 square feet total with a maximum camera weight of 240 pounds total.

Wind load is calculated assuming a maximum fill height of 5 feet. Do not use the design tables for fill heights more than 5 feet.

Poles are assumed to be on level ground. For poles within slopes, increase the burial depth in accordance with the table below. For values in-between those shown in the table, use the higher value.

Additional Shaft Depth Due to Ground Slope (feet)

Ground Slope	Additional Burial Depth due to Ground Slope (feet)
5H:1V	3
4H:1V	4
3H:1V	5
2H:1V	7

Foundations are designed based on the following soil criteria:

Classification:	Cohesionless (Fine Sand)
Friction Angle:	30 Degrees
Unit Weight:	50 lbs/cubic foot (assumed submerged)

When the designer considers soil types at the specific site location to be of lesser strength properties than shown above, an analysis is required. Auger borings, SPT borings, or CPT soundings may be used as needed to verify the assumed soil properties, and at sites confirmed to be uniform, a single boring or sounding may cover several foundations. Borings in the area that were performed for other purposes may be used to confirm the assumed soil properties.

Plan Content Requirements

See ***PPM***, Volume 2, Chapter 29.

Payment

Item number	Item description	Unit Measure
785-1-11	ITS Pole, F&I, Concrete - With Lowering Device	EA
785-1-13	ITS Pole, F&I, Concrete - Without Lowering Device	EA

Index 20010 Series Prestressed Florida-I Beams (Rev. 11/16)

Design Criteria

AASHTO LRFD Bridge Design Specifications; ***Structures Detailing Manual (SDM)***; ***Structures Design Guidelines (SDG)***

Design Assumptions and Limitations

Index 20010 is the lead standard for the Prestressed Florida-I Beam standard series which includes Indexes 20010 through 20096. Use this standard with Indexes 20036, 20045, 20054, 20063, 20072, 20078, 20084, 20096, 20199, 20510, and 20511 or 20512.

These standards must be supplemented with project specific information including a Table of Beam Variables, Strand Pattern Details and a Strand Debonding Legend which must be completed and included in the Structures Plans. These standards and the supplemental project specific information that is included in the plans provide sufficient information to permit beam fabrication without the submittal of shop drawings.

Data tables for associated Indexes 20199, 20510, and 20511 or 20512 must also be completed and included in the plans.

The use of End Diaphragms is not preferred on simple span, pretensioned, Florida-I Beam structures. In lieu of End Diaphragms, the preferred detail is a Thickened Slab End at all locations of slab discontinuity. Where End Diaphragms are required by design or for widening projects, partial depth diaphragms are preferred. See ***SDM*** Chapter 15 for suggested details.

Except for widening projects where special details may be required, squared beam ends are preferred on all Florida-I Beam structures.

The prestressed beams in these Standard Drawings are generally assumed to act as simple spans under both Dead Load and Live Load even where the deck is detailed to be continuous across the intermediate supports or back-to-back diaphragms are present. For detailing purposes, Prestressed Florida-I Beams are assumed to be erected plumb.

When the total initial tensioning force of the fully bonded strands required by design exceeds the values shown below, shield additional strands at the end of the beam when possible. The end reinforcement may only be redesigned to accommodate an increased vertical splitting force when approved by the State Structures Design Office. If approval is granted, Index 20010 and the appropriate Standard Detail Drawings must then be modified for inclusion in the contract documents and signed and sealed by the EOR.

To limit vertical splitting forces in the webs of beams, the maximum prestress force at the beam ends from fully bonded strands must be limited to the following:

Index No.	Beam Type	Max. Bonded Prestress Force	Last Revision Date
20036	Florida-I 36	1450 Kips	07/01/09
20045	Florida-I 45	1670 Kips	07/01/09
20054	Florida-I 54	1740 Kips	07/01/09
20063	Florida-I 63	1740 Kips	07/01/09
20072	Florida-I 72	1980 Kips	07/01/09
20078	Florida-I 78	2230 Kips	07/01/09
20084	Florida-I 84	2375 Kips	07/01/10
20096	Florida-I 96	2375 Kips	07/01/10

Do not apply losses when calculating the Bonded Prestress Force.

Embedded Bearing Plates are required for all beams. If the beam grade exceeds 2%, provide Beveled Bearing Plates at each end of the beam as shown in Index 20511 or Index 20512.

Prestressed Beam Suppliers typically utilize side forms for casting which are not easily or economically modified. If modifications to beam cross-sections are required for any reason other than haunched sections, maintain profile dimensions of the form. For example: To thicken the web, increase the spacing between side forms. To increase the beam height, increase the thickness of the top flange. In any case, do not reduce the standard thickness of either the top or bottom flange.

See additional instructions in the ***SDG***.

Plan Content Requirements

In the Structures Plans:

Complete the following "FLORIDA-I BEAM - TABLE OF BEAM VARIABLES" and include it in the plans. Use additional sheets when the actual number of beams or strand patterns exceeds the capacity of a single plan sheet using the standard table. Supplemental details and modifications are permitted if special conditions require dimensions, details or notes. However, the "FLORIDA-I BEAM - TABLE OF BEAM VARIABLES" itself should not be modified. See Introduction I.3 for more information regarding use of Data Tables.

Report elastic and time dependent shortening effects (DIM R) at mid-height of the beam @ 120 days. The average of the calculated values for the top and bottom of the beam may be used.

Report DIM P for beams placed on grade if the calculated value is equal or greater than 1" using ⅛" increments. Also consider the effect of beam end rotations for Florida-I 84 and 96 beams, if significant. Different “P” dimensions at each end may be necessary for accommodating these effects, which will require modifying the "FLORIDA-I BEAM - TABLE OF BEAM VARIABLES" using suggested DIM P1 and DIM P2.

Show strands in the outermost positions of the two lowest rows to support Bars D.

Round Angle Φ up to the nearest degree.

Specify shear stirrup spacing V1 for Bars 5K to the nearest inch.

Prepare a Framing Plan for bridges meeting the criteria stated in the ***SDM***.

When diaphragms are required by design, show them on the Framing Plan. Tabulate insert locations with respect to the beam ends and beam faces. Include length adjustments for beams placed on grade and for elastic and time dependent shortening effects. See ***SDM*** Chapter 15 for preferred diaphragm and reinforcing details.

For bridge widenings where beam ends are encased in full height diaphragms and the diaphragms are to be extended, modify Index 20010 and the appropriate Index associated with the specific beam height and include them in the plans as follows:

- Modify the Design Standards in accordance with Method 1, Method 2 or Method 3 as defined in the Terms Of Use for the Borderless DGNs provided in the Design Standards eBooklet.
- Remove all notes, call-outs and details regarding cutting the strands and coating the ends of the beams with epoxy.
- Insert all notes, call-outs and details to ensure proper placement of Bars 4L as shown in the 2010 Design Standards Interim Dated 01/01/10 (Effective Date: July 1, 2010). Detail the number of bars, bar locations and bar bending diagrams

FLORIDA-I BEAM - TABLE OF BEAM VARIABLES

Table Date 01-01-16

LOCATION		BEAM TYPE	CONCRETE PROPERTIES			STND PTRN. TYPE	END ELEV. COND	PLAN VIEW CASE		BRG. PLATE MARK ***		END OF BEAM & BEARING DIMENSIONS **						BEAM DIMENSIONS *		REINFORCING STEEL															
SPAN NO.	BEAM NO.		CLASS	STRENGTHS (psi)								ANGLE Ø		DIM P	DIM J	DIM K1	DIM K2			3C1	3C2	3D1		3D2		3D3	4M1	4M2	4M3	5K	NO. OF SPACES BARS 5K				SP. BARS 5K *
				28 Day	Release			END 1	END 2	END 1	END 2	END 1	END 2					DIM L	DIM R	C	C	A	B	A	B	NO.	D	D	NO.	NO.	S1	S2	S3	S4	V1

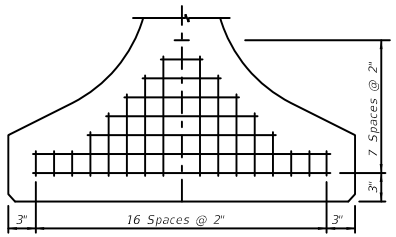

TYPE 1 __ STRANDS

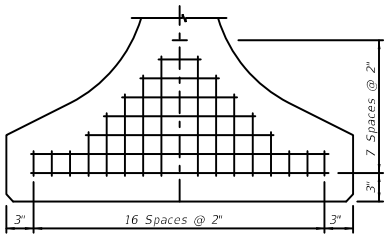

TYPE 2 __ STRANDS

STRAND DESCRIPTION: Use ____ Diameter, Grade 270 Low-Relaxation Carbon Steel Strands stressed at ___ kips each. Area per strand equals ___ sq. in.

STRAND PATTERNS

STRAND DEBONDING LEGEND

- • - fully bonded strands.
- ⊙ - strands debonded _'-__" from end of beam.
- ⊡ - strands debonded _'-__" from end of beam.
- △ - strands debonded _'-__" from end of beam.
- ◇ - strands debonded _'-__" from end of beam.

NOTE: On beams with skewed ends, the debonded length shall be measured along the shielded strand.

NOTE: Work this sheet with Design Standards Index Nos. 20010 and the applicable "Florida-I Beam Standard Details" Index.

DIMENSION NOTES

* All longitudinal beam dimensions shown on this sheet with a single asterisk (*) are measured along the centerline of beam. Dimension "R" is calculated at mid-height of the beam.

** End beam bearing dimensions "J" and "K" are measured perpendicular to ℄ Bearing along the bottom of the beam.

BEARING PLATES

*** See the Bearing Plate Data Table for details.

Payment

Item number	Item description	Unit Measure
450-2-AAA	Prestressed Beams: Florida-I Beam	LF

Example Problem

The following example shows the data required for completion of a Florida-I Beam Table of Beam Variables. The example assumes a three span bridge with Florida-I 45 Beams designed for the following conditions:

Live Load: HL-93

No intermediate Diaphragms

Stay-in-Place Metal Forms:

Allowance of 20 PSF non-composite dead load over the projected plan area of the forms (this includes the unit weight of metal forms and the concrete required to fill the form flutes).

Environment (Superstructure): Moderately Aggressive

Bridge Characteristics:

Length: 276 ft.
Width: 51'-1" (out-to-out)
Clear Roadway: 48 ft.

Superstructure:

Three simple spans of prestressed concrete beams with 8-inch composite deck slab (plus ½" sacrificial deck thickness)

Span: 87'-0", 102'-0", 87'-0"

Sidewalk: None

Horizontal Alignment: Straight

Vertical Alignment: 0.00% Grade

Skew Angle: 15 degrees (Right)

Beam Design:

Beam: Florida-I 45 Beam

Spacing:

11'-3", 87' Span (5 Beams)
9'-0", 102' Span (6 Beams)

Design Span Length:

84'-6" (Spans 1 & 3)
99'-8" (Span 2)

Sample Drawing

FLORIDA-I BEAM - TABLE OF BEAM VARIABLES

Table Date 01-01-16

LOCATION		BEAM TYPE	CONCRETE PROPERTIES			STND PTRN TYPE	END ELEV. COND	PLAN VIEW CASE		BRG. PLATE MARK ***		END OF BEAM & BEARING DIMENSIONS **						BEAM DIMENSIONS *		REINFORCING STEEL														
SPAN NO.	BEAM NO.		CLASS	STRENGTHS (psi)				END 1	END 2	END 1	END 2	ANGLE Ø		DIM P	DIM J	DIM K1	DIM K2			3C1	3C2	3D1		3D2		3D3	4M1	4M2	4M3	5K	NO. OF SPACES BARS 5K				SP. BARS 5K *
				28 Day	Release							END 1	END 2					DIM L	DIM R	C	C	A	B	A	B	NO.	D	D	NO.	NO.	S1	S2	S3	S4	V1
1	1-5	45	V	6500	5000	2	1	2	2	1-1	1-2	75°	75°	-	7½"	1'-3½"	1'-1½"	85'-10½"	1"	1'-6¼"	1'-6¼"	8¾"	1'-3½"	8¾"	1'-3½"	100	3'-9½"	3'-9½"	73	148	16	35	-	2	6"
2	1-6	45	V	6500	5000	1	1	2	2	2-1	2-2	75°	75°	-	7½"	1'-1½"	1'-1½"	101'-0¾"	1¼"	1'-6¼"	1'-6¼"	8¾"	1'-3½"	8¾"	1'-3½"	120	3'-9½"	3'-9½"	88	136	10	13	10	14	6"
3	1-5	45	V	6500	5000	2	1	2	2	3-1	3-2	75°	75°	-	7½"	1'-1½"	1'-3½"	85'-10½"	1"	1'-6¼"	1'-6¼"	8¾"	1'-3½"	8¾"	1'-3½"	100	3'-9½"	3'-9½"	73	148	16	35	-	2	6"

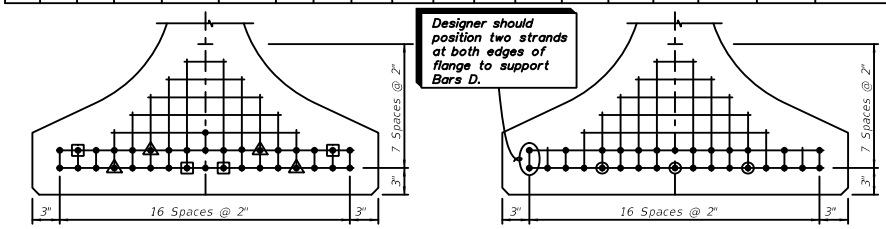

TYPE 1 35 STRANDS

TYPE 2 30 STRANDS

STRAND DESCRIPTION: Use 0.6 Diameter, Grade 270, Low Relaxation Carbon Steel Strands stressed at 44 kips each. Area per strand equals 0.217 sq. in.

STRAND PATTERNS

STRAND DEBONDING LEGEND

- ● - fully bonded strands.
- ⊙ - strands debonded 10'-0" from end of beam.
- ⊡ - strands debonded 20'-0" from end of beam.
- △ - strands debonded 25'-0" from end of beam.

NOTE: On beams with skewed ends, the debonded length shall be measured along the shielded strand.

NOTE: Work this sheet with Design Standards Index Nos. 20010 and the applicable "Florida-I Beam Standard Details" Index.

DIMENSION NOTES

* All longitudinal beam dimensions shown on this sheet with a single asterisk (*) are measured along the centerline of beam. Dimension "R" is calculated at mid-height of the beam.

** End beam bearing dimensions "J" and "K" are measured perpendicular to ℄ Bearing along the bottom of the beam.

BEARING PLATES

*** See the Bearing Plate Data Table for details.

REVISIONS					
DATE	BY	DESCRIPTION	DATE	BY	DESCRIPTION

DRAWN BY: XXX MM-YY
CHECKED BY: XXX MM-YY
DESIGNED BY: XXX MM-YY
CHECKED BY: XXX MM-YY

STATE OF FLORIDA
DEPARTMENT OF TRANSPORTATION

ROAD NO.	COUNTY	FINANCIAL PROJECT ID

SHEET TITLE: SAMPLE

PROJECT NAME:

REF. DWG. NO.

SHEET NO.

Design Aids

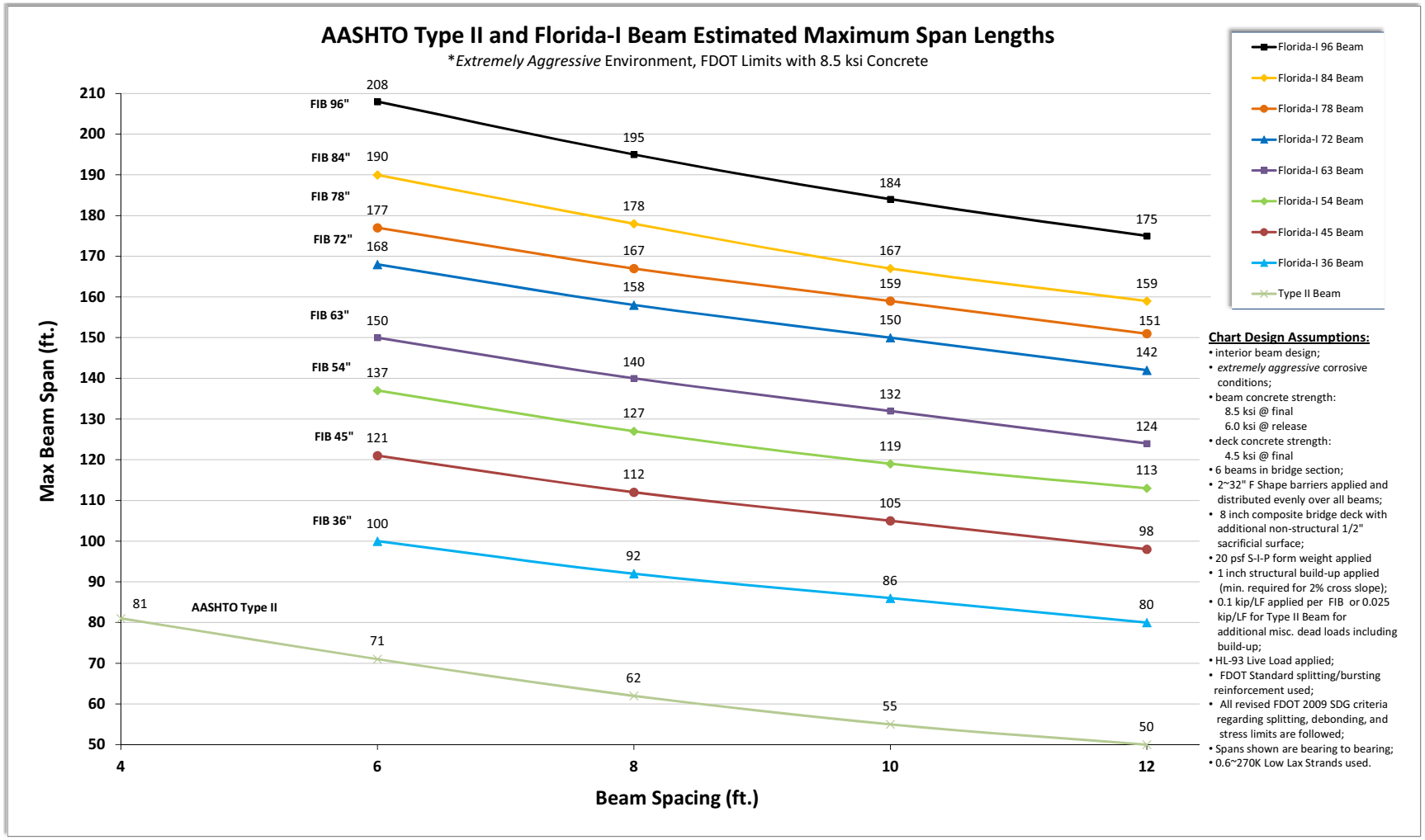
AASHTO Type II and Florida-I Beam Estimated Maximum Span Lengths
*Extremely Aggressive Environment, FDOT Limits with 8.5 ksi Concrete
Max Beam Span (ft.)
Beam Spacing (ft.)
FIB 96"
FIB 84"
FIB 78"
FIB 72"
FIB 63"
FIB 54"
FIB 45"
FIB 36"
AASHTO Type II
208
195
184
175
190
178
167
159
177
167
159
151
168
158
150
142
150
140
132
124
137
127
119
113
121
112
105
98
100
92
86
80
81
71
62
55
50
Florida-I 96 Beam
Florida-I 84 Beam
Florida-I 78 Beam
Florida-I 72 Beam
Florida-I 63 Beam
Florida-I 54 Beam
Florida-I 45 Beam
Florida-I 36 Beam
Type II Beam
Chart Design Assumptions:
• interior beam design;
• extremely aggressive corrosive conditions;
• beam concrete strength:
8.5 ksi @ final
6.0 ksi @ release
• deck concrete strength:
4.5 ksi @ final
• 6 beams in bridge section;
• 2~32" F Shape barriers applied and distributed evenly over all beams;
• 8 inch composite bridge deck with additional non-structural 1/2" sacrificial surface;
• 20 psf S-I-P form weight applied
• 1 inch structural build-up applied (min. required for 2% cross slope);
• 0.1 kip/LF applied per FIB or 0.025 kip/LF for Type II Beam for additional misc. dead loads including build-up;
• HL-93 Live Load applied;
• FDOT Standard splitting/bursting reinforcement used;
• All revised FDOT 2009 SDG criteria regarding splitting, debonding, and stress limits are followed;
• Spans shown are bearing to bearing;
• 0.6~270K Low Lax Strands used.

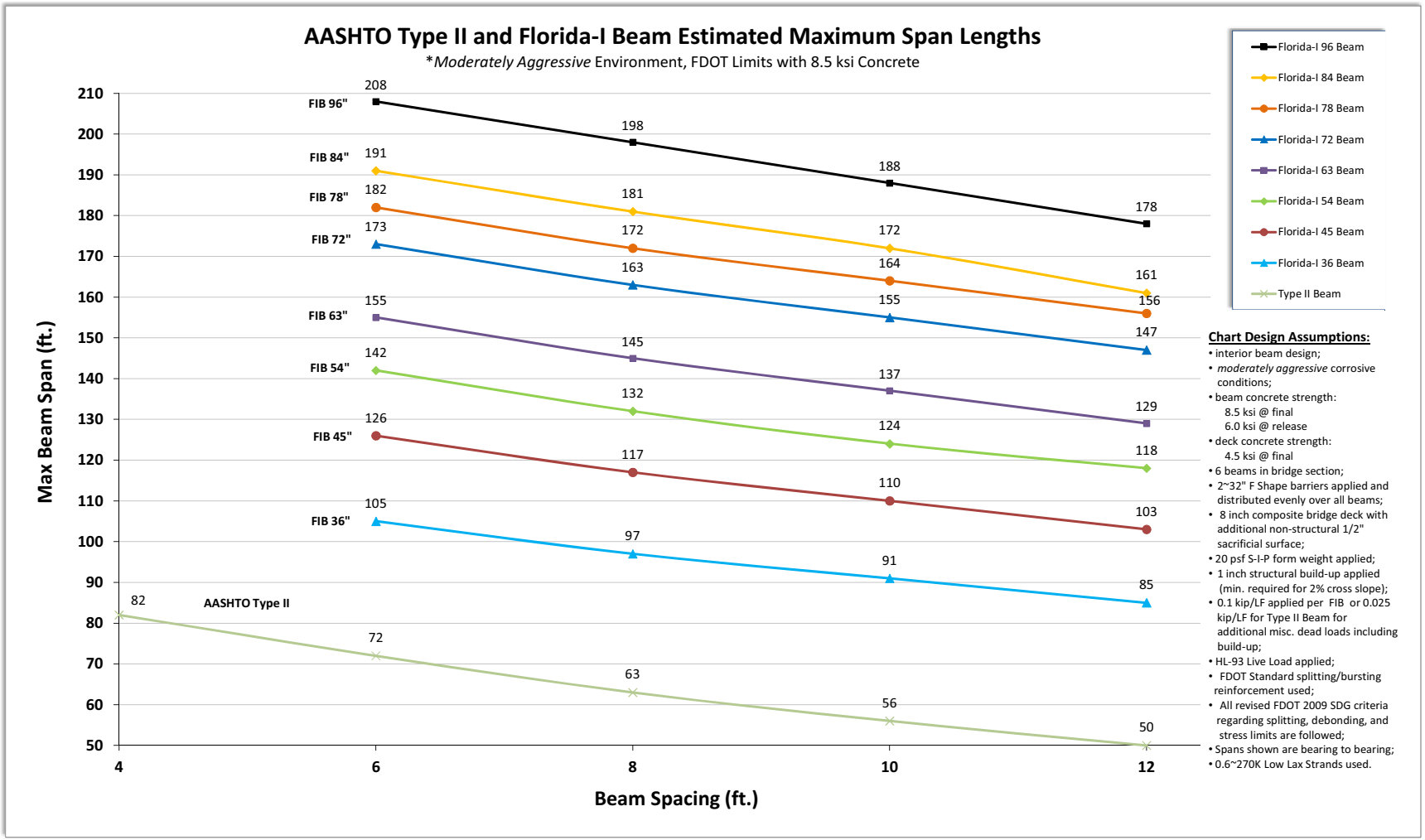
AASHTO Type II and Florida-I Beam Estimated Maximum Span Lengths
*Moderately Aggressive Environment, FDOT Limits with 8.5 ksi Concrete
Max Beam Span (ft.)
Beam Spacing (ft.)
FIB 96"
FIB 84"
FIB 78"
FIB 72"
FIB 63"
FIB 54"
FIB 45"
FIB 36"
AASHTO Type II
Florida-I 96 Beam
Florida-I 84 Beam
Florida-I 78 Beam
Florida-I 72 Beam
Florida-I 63 Beam
Florida-I 54 Beam
Florida-I 45 Beam
Florida-I 36 Beam
Type II Beam
Chart Design Assumptions:
• interior beam design;
• moderately aggressive corrosive conditions;
• beam concrete strength:
8.5 ksi @ final
6.0 ksi @ release
• deck concrete strength:
4.5 ksi @ final
• 6 beams in bridge section;
• 2~32" F Shape barriers applied and distributed evenly over all beams;
• 8 inch composite bridge deck with additional non-structural 1/2" sacrificial surface;
• 20 psf S-I-P form weight applied;
• 1 inch structural build-up applied (min. required for 2% cross slope);
• 0.1 kip/LF applied per FIB or 0.025 kip/LF for Type II Beam for additional misc. dead loads including build-up;
• HL-93 Live Load applied;
• FDOT Standard splitting/bursting reinforcement used;
• All revised FDOT 2009 SDG criteria regarding splitting, debonding, and stress limits are followed;
• Spans shown are bearing to bearing;
• 0.6~270K Low Lax Strands used.

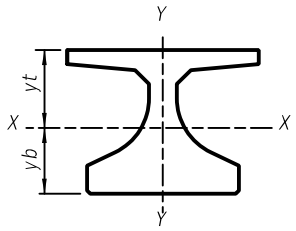

FIB-36
(INDEX 20036)

FIB-36 SECTION PROPERTIES	
Area (in.^{2})	806.58
Perimeter (in.)	206.57
Ixx (in.^{4})	127,545
Iyy (in.^{4})	81,070
yt (in.)	19.51
yb (in.)	16.49

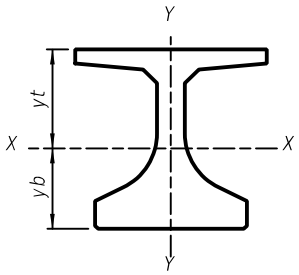

FIB-45
(INDEX 20045)

FIB-45 SECTION PROPERTIES	
Area (in.^{2})	869.58
Perimeter (in.)	224.57
Ixx (in.^{4})	226,581
Iyy (in.^{4})	81,327
yt (in.)	24.79
yb (in.)	20.21

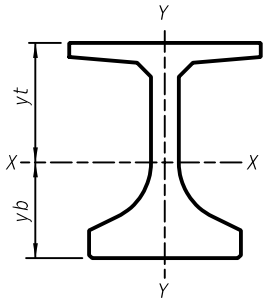

FIB-54
(INDEX 20054)

FIB-54 SECTION PROPERTIES	
Area (in.^{2})	932.58
Perimeter (in.)	242.57
Ixx (in.^{4})	359,929
Iyy (in.^{4})	81,584
yt (in.)	29.96
yb (in.)	24.04

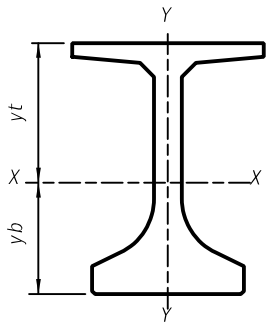

FIB-63
(INDEX 20063)

FIB-63 SECTION PROPERTIES	
Area (in.^{2})	995.58
Perimeter (in.)	260.57
Ixx (in.^{4})	530,313
Iyy (in.^{4})	81,842
yt (in.)	35.04
yb (in.)	27.96

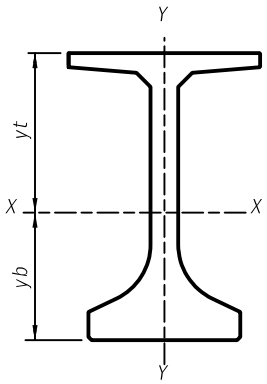

FIB-72
(INDEX 20072)

FIB-72 SECTION PROPERTIES	
Area (in.^{2})	1,058.58
Perimeter (in.)	278.57
Ixx (in.^{4})	740,416
Iyy (in.^{4})	82,099
yt (in.)	40.06
yb (in.)	31.94

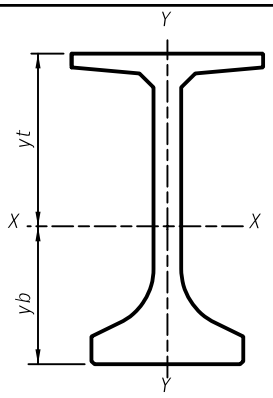

FIB-78
(INDEX 20078)

FIB-78 SECTION PROPERTIES	
Area (in.^{2})	1,100.58
Perimeter (in.)	290.57
Ixx (in.^{4})	903,861
Iyy (in.^{4})	82,270
yt (in.)	43.37
yb (in.)	34.63

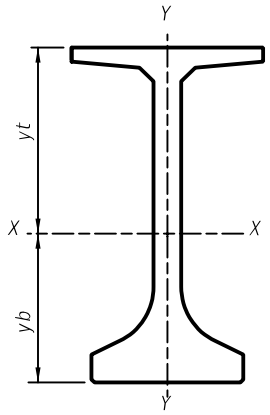

FIB-84
(INDEX 20084)

FIB-84 SECTION PROPERTIES	
Area (in.^{2})	1,142.58
Perimeter (in.)	302.57
Ixx (in.^{4})	1.087×10^6
Iyy (in.^{4})	82,442
yt (in.)	46.66
yb (in.)	37.34

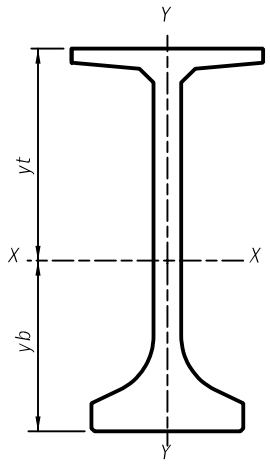

FIB-96
(INDEX 20096)

FIB-96 SECTION PROPERTIES	
Area (in.^{2})	1,226.58
Perimeter (in.)	326.57
Ixx (in.^{4})	1.515×10^6
Iyy (in.^{4})	82,785
yt (in.)	53.18
yb (in.)	42.82

Index 20120 AASHTO Type II Beams (Rev. 11/16)

Design Criteria

AASHTO LRFD Bridge Design Specifications; ***Structures Detailing Manual (SDM)***; ***Structures Design Guidelines (SDG)***

Design Assumptions and Limitations

Index 20120 is the standard for the AASHTO Type II Beam. Use this standard with Indexes 20199, 20510, and 20511 or 20512.

This standard must be supplemented with project specific information including a Table of Beam Variables, Strand Pattern Details and a Strand Debonding Legend which must be completed and included in the Structures Plans. This standard and the supplemental project specific information that is included in the plans provides sufficient information to permit beam fabrication without the submittal of shop drawings.

Data tables for associated Indexes 20199, 20510 and 20511 or 20512 must also be completed and included in the plans.

A Framing Plan is required for bridges meeting the criteria stated in the ***SDM***.

The use of End Diaphragms is not preferred on simple span, pretensioned, I-Beam structures. In lieu of End Diaphragms, the preferred detail is a Thickened Slab End at all locations of slab discontinuity. Where End Diaphragms are required by design or for widening projects, partial depth diaphragms are preferred. See ***SDM*** Chapter 15 for suggested details.

Except for widening projects where special details may be required, squared beam ends are preferred on all pretensioned I-Beam structures.

The prestressed beams in these Standard Drawings are generally assumed to act as simple spans under both Dead Load and Live Load even where the deck is detailed to be continuous across the intermediate supports or back-to-back diaphragms are present. For detailing purposes, Prestressed I-Beams are assumed to be erected plumb.

When the total initial tensioning force of the fully bonded strands required by design exceeds the value shown below, shield additional strands at the end of the beam when possible. The end reinforcement may only be redesigned to accommodate an increased vertical splitting force when approved by the State Structures Design Office. If approval is granted, Index 20120 must then be modified for inclusion in the contract documents and signed and sealed by the EOR.

To limit vertical splitting forces in the webs of beams, the maximum prestress force at the beam ends from fully bonded strands must be limited to the following:

Index No.	Beam Type	Max. Bonded Prestress Force	Last Revision Date
20120	AASHTO Type II	755 Kips	07/01/05 or later

Do not apply losses when calculating the Bonded Prestress Force.

If the beam grade exceeds 2%, provide Embedded Bearing Plates and Beveled Bearing Plates at each end of the beam as shown on Index 20511 or 20512.

See additional instructions in the ***SDG***.

Plan Content Requirements

In the Structures Plans:

Complete the appropriate "TABLE OF BEAM VARIABLES" and include it in the plans. Use additional sheets when the actual number of beams or strand patterns exceeds the capacity of a single plan sheet using the standard table. Supplemental details and modifications are permitted if special conditions require dimensions, details or notes. However, the "TABLE OF BEAM VARIABLES" itself should not be modified. See Introduction I.3 for more information regarding use of Data Tables.

Report elastic and time dependent shortening effects (DIM R) at the top of the beam @ 120 days. The average of the calculated values for the top and bottom of the beam may be used.

Report DIM P for beams placed on grade if the calculated value is equal or greater than 1" using ⅛" increments.

Show strands in the outermost positions of the lowest row to support Bars D.

Round Angle Φ up to the nearest degree.

Specify shear stirrup spacings V1, V2 and V3 for Bars 4K or 5K to the nearest inch.

Prepare a Framing Plan for bridges meeting the criteria stated in the ***SDM***.

When intermediate diaphragms are required by design, show them on the Framing Plan. Tabulate insert locations with respect to the beam ends and beam faces. Include length adjustments for beams placed on grade and for elastic and time dependent shortening effects. Show Type 33 No. 8 reinforcing bars with 3" thread lengths for attachment to the inserts on the intermediate diaphragm details. Include these bars in the Superstructure Reinforcing Bar list.

For bridge widenings where beam ends are encased in full height diaphragms and the diaphragms are to be extended, modify Index 20120 and include it in the plans as follows:

- Modify the Design Standards in accordance with Method 1, Method 2 or Method 3 as defined in the Terms Of Use for the Borderless DGNs provided in the Design Standards eBooklet.
- Remove all notes, call-outs and details regarding cutting the strands and coating the ends of the beams with epoxy.
- Insert all notes, call-outs and details to ensure proper placement of Bars 4L as shown in the 2010 Design Standards. Detail the number of bars, bar locations and bar bending diagrams

Table 20120 - AASHTO Type II Beam - Table of Beam Variables

AASHTO TYPE II BEAM - TABLE OF BEAM VARIABLES

Table Date 01-01-16

LOCATION		CONCRETE PROPERTIES			STND.	END	PLAN VIEW CASE		BRG. PLATE MARK ***		END OF BEAM & BEARING DIMENSIONS **						BEAM DIMENSIONS *		REINFORCING STEEL												
SPAN	BEAM	CLASS	STRENGTHS (psi)		PTRN.	ELEV.					ANGLE Ø		DIM P	DIM J	DIM K1	DIM K2			3D1		3D2		4K	NO. OF SPACES BARS 4K				SPACING BARS 4K *			
NO.	NO.		28 Day	Release	TYPE	COND.	END 1	END 2	END 1	END 2	END 1	END 2					DIM L	DIM R	B	Length	B	Length	NO.	S1	S2	S3	S4	V1	V2	V3	V4

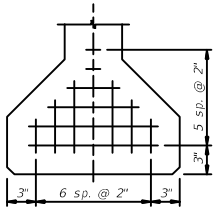

TYPE 1 __ STRANDS

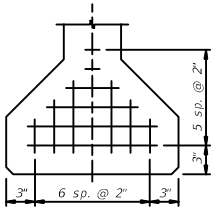

TYPE 2 __ STRANDS

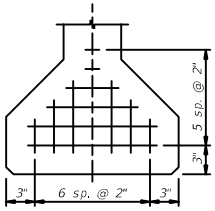

TYPE 3 __ STRANDS

STRAND DESCRIPTION: Use ___ Diameter, Grade 270 Low-Relaxation Carbon Steel Strands stressed at ___ kips each. Area per strand equals ___ sq. in.

STRAND PATTERNS

STRAND DEBONDING LEGEND

- • - fully bonded strands.
- ⊙ - strands debonded _'-__" from end of beam.
- ⊡ - strands debonded _'-__" from end of beam.
- △ - strands debonded _'-__" from end of beam.
- ◇ - strands debonded _'-__" from end of beam.

NOTE: On beams with skewed ends the debonded length shall be measured along the debonded strand.

NOTE: Work this sheet with Design Standards Index No. 20120.

DIMENSION NOTES

* All longitudinal beam dimensions shown on this sheet with a single asterisk (*) are measured along the top of beam at the centerline of beam.

** End of beam bearing dimensions "J" and "K" are measured along the bottom of the beam.

BEARING PLATES

*** Mark indicates beveled bearing plate and embedded bearing plate required. See Index No. 20511 or 20512 for details.

Payment

Item number	Item description	Unit Measure
450-1-AAA	Prestressed Beams	LF

Design Aids

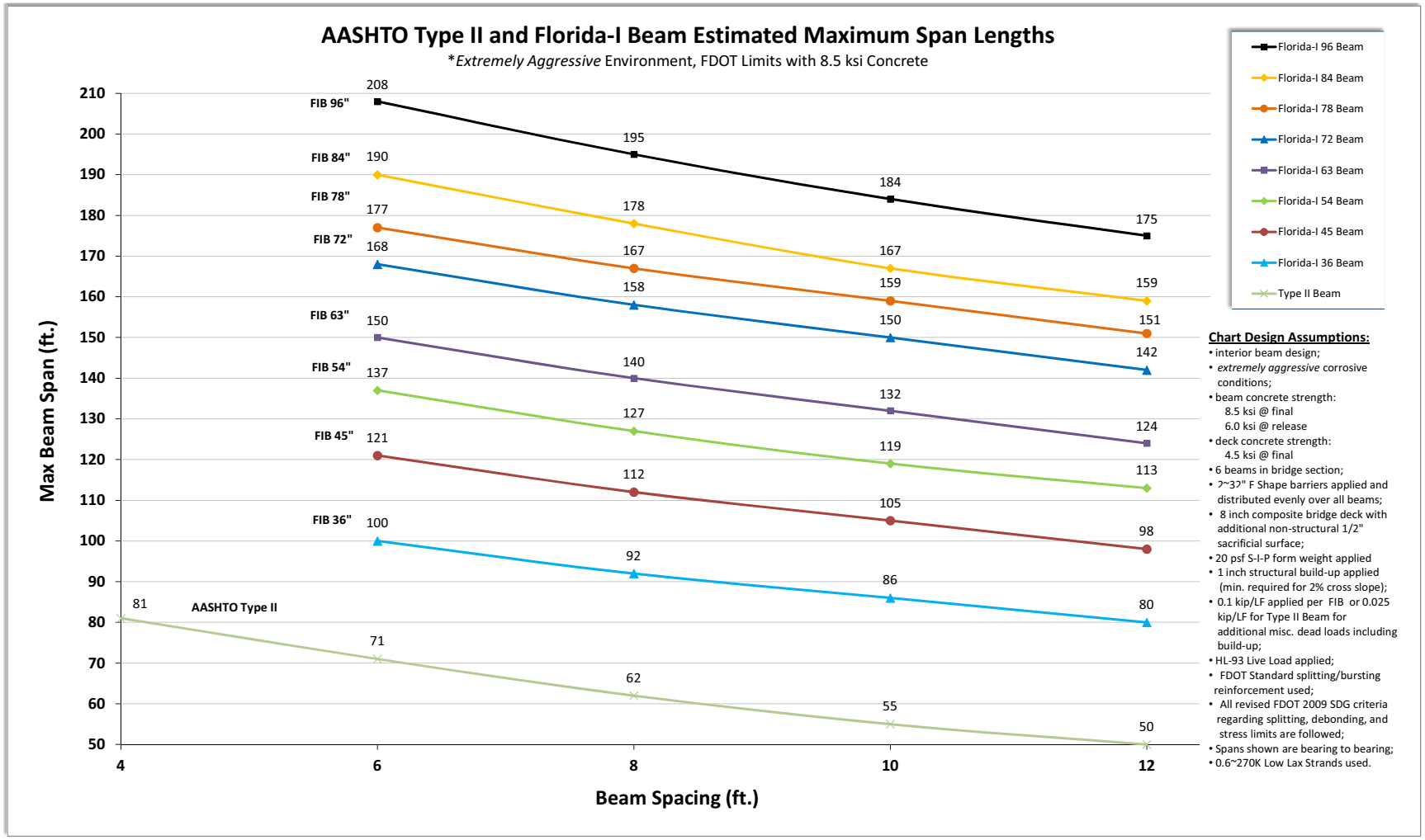

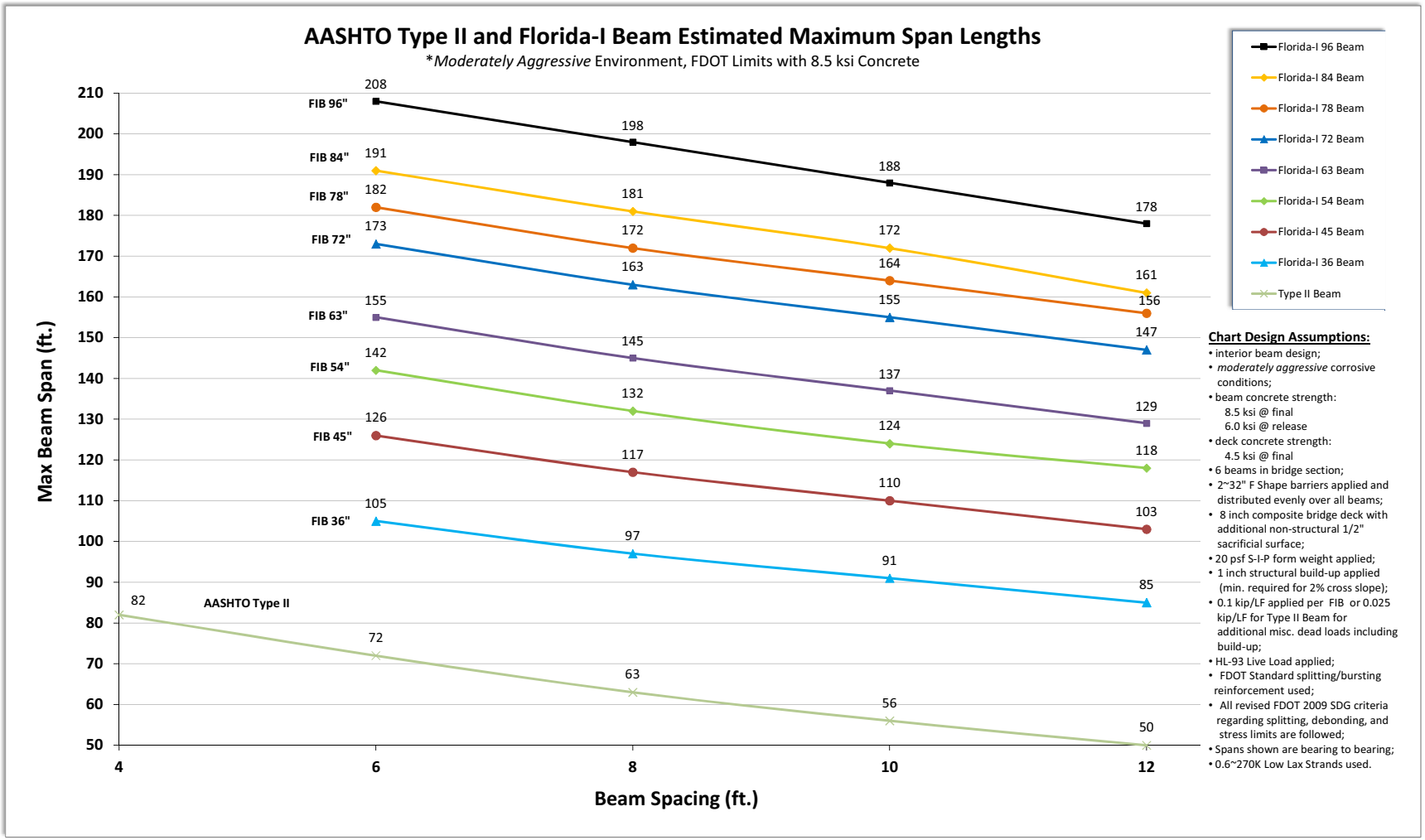
AASHTO Type II and Florida-I Beam Estimated Maximum Span Lengths
*Moderately Aggressive Environment, FDOT Limits with 8.5 ksi Concrete
Max Beam Span (ft.)
Beam Spacing (ft.)
FIB 96"
FIB 84"
FIB 78"
FIB 72"
FIB 63"
FIB 54"
FIB 45"
FIB 36"
AASHTO Type II
Florida-I 96 Beam
Florida-I 84 Beam
Florida-I 78 Beam
Florida-I 72 Beam
Florida-I 63 Beam
Florida-I 54 Beam
Florida-I 45 Beam
Florida-I 36 Beam
Type II Beam
Chart Design Assumptions:
• interior beam design;
• moderately aggressive corrosive conditions;
• beam concrete strength:
8.5 ksi @ final
6.0 ksi @ release
• deck concrete strength:
4.5 ksi @ final
• 6 beams in bridge section;
• 2~32" F Shape barriers applied and distributed evenly over all beams;
• 8 inch composite bridge deck with additional non-structural 1/2" sacrificial surface;
• 20 psf S-I-P form weight applied;
• 1 inch structural build-up applied (min. required for 2% cross slope);
• 0.1 kip/LF applied per FIB or 0.025 kip/LF for Type II Beam for additional misc. dead loads including build-up;
• HL-93 Live Load applied;
• FDOT Standard splitting/bursting reinforcement used;
• All revised FDOT 2009 SDG criteria regarding splitting, debonding, and stress limits are followed;
• Spans shown are bearing to bearing;
• 0.6~270K Low Lax Strands used.

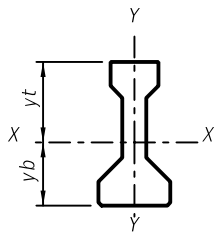

AASHTO TYPE II BEAM
(INDEX 20120)

SECTION PROPERTIES*	
Area (in.^{2})	369
Ixx (in.^{4})	50,979
Iyy (in.^{4})	5,333
yt (in.)	20.17
yb (in.)	15.83

* These section properties are based on gross section properties and neglect the 3/4" chamfers on the bottom flanges.

Index 20199 Build-Up and Deflection Data for Prestressed I-Beams

Design Criteria

AASHTO LRFD Bridge Design Specifications; ***Structures Detailing Manual (SDM)***; ***Structures Design Guidelines (SDG)***

Design Assumptions and Limitations

Use this standard in conjunction with Indexes 20010, 20036, 20045, 20054, 20063, 20072, 20078, 20084, 20096 and 20120.

Unless otherwise required as a design parameter, beam camber for computing the theoretical build-up must be based on 120-day old beam concrete.

Consider the effects of horizontal curvature with bridge deck cross slope when determining the minimum theoretical build-up over the tip of the inside flange. Consider that the vertical curve geometry is along the effective alignment along a chord at the centerline of the beam, which may be different from the alignment parallel to the Profile Grade Line.

For a given size and type of beam, beam camber and associated Dim B and Dim D will vary due to span lengths and beam spacings. Dim B and Dim D will also vary from span to span along the length of a bridge due to deck geometry. To provide for better aesthetics and potentially easier detailing of the supporting pedestals, where possible adjust the values of Dim B and Dim D over equal height beams in adjacent spans so as to allow the beam bottom flanges to line up. Dim B and Dim D do not necessarily have to be the same value for a single beam. See the following sketch:

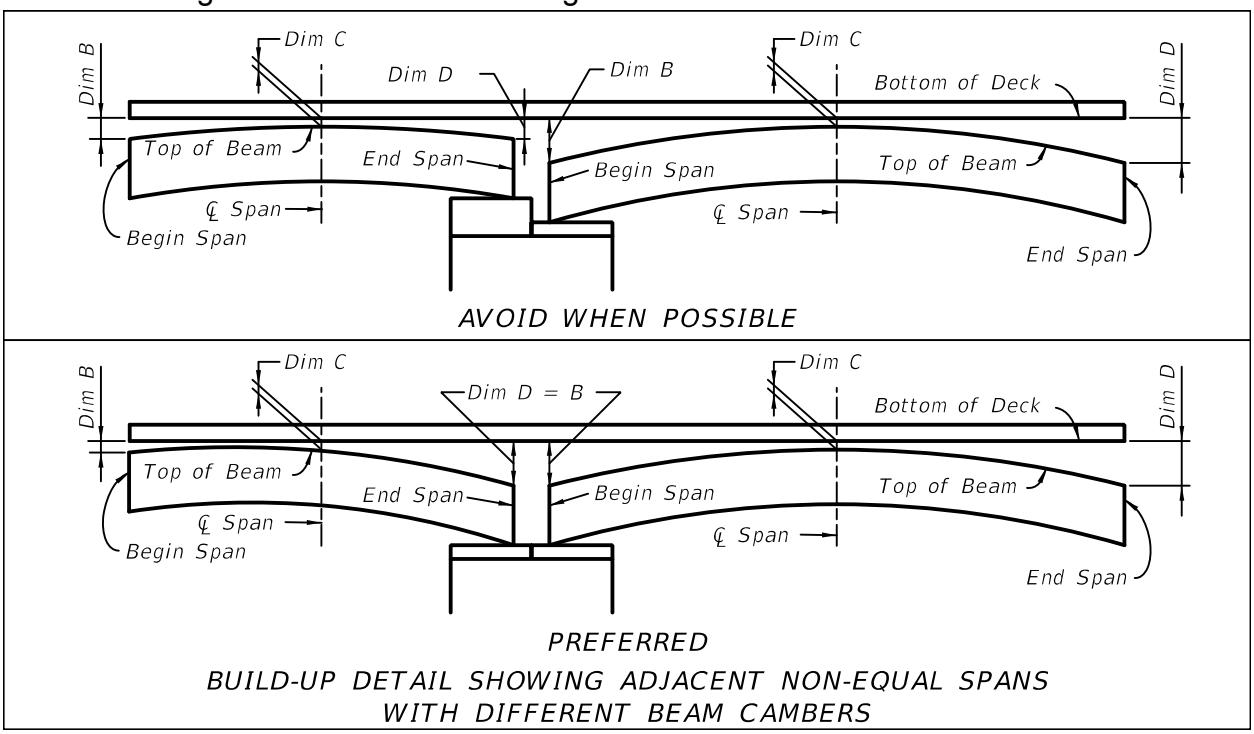

Plan Content Requirements

Complete the following "Build-Up and Deflection Data Table for AASHTO Type II and Florida-I Beams" and include it on the superstructure detail sheets. See Introduction I.3 for more information regarding use of Data Tables.

BUILD-UP & DEFLECTION DATA TABLE FOR PRESTRESSED I-BEAMS							Table Date 07/01/13
LOCATION		REQUIRED THEORETICAL BUILD-UP OVER ℄ BEAM			NET BEAM CAMBER (PRESTRESS - DEAD LOAD OF BEAM) @ 120 DAYS	DEAD LOAD DEFLECTION DURING DECK POUR @ 120 DAYS DIM A	BUILD-UP CASE NO.
SPAN NO.	BEAM NO.	AT BEGIN SPAN DIM B	AT ℄ SPAN DIM C	AT END SPAN DIM D			

NOTES: Work this sheet with Design Standard Index No. 20199.

Payment

Include estimated build-up concrete quantities with the estimated deck concrete quantities. Do not break out estimated build-up concrete quantities.

In the absence of more refined calculations, the following method to calculate estimated concrete build-up quantities may be used:

For Case 1, 2 & 3: $$V = \frac{LW\left[C + \left(\frac{B + D - 2C}{6}\right)\right]}{27}$$

For Case 4: $$V = \frac{LW\left[\left(\frac{B + D}{2}\right) + \left(\frac{2}{3}\left(C - \frac{B + D}{2}\right)\right)\right]}{27}$$

Where:

V = Total Volume of build-up per beam (CY)

L = Beam Length (ft)

W = Width of beam top flange (ft)

B; C; D = Build-up Thickness (ft)

Index 20210 Series Florida-U Beams

Design Criteria

AASHTO LRFD Bridge Design Specifications; ***Structures Detailing Manual (SDM)***; ***Structures Design Guidelines (SDG)***

Design Assumptions and Limitations

Index 20210 is the lead standard for the Florida-U Beam standard series which includes Indexes 20210 through 20272. Use this standard with Indexes 20248, 20254, 20263, 20272, 20299 and 20502.

The standard Florida-U Beams are applicable for spans with skewed end conditions less than or equal to 15 degrees. For beams with skewed end conditions greater than 15 degrees the EOR shall develop a custom design and details using the standards as a basis.

These standards must be supplemented with project specific information including a Table of Beam Variables, Strand Pattern Details and a Strand Debonding Legend which must be completed and included in the Structures Plans. These standards and the supplemental project specific information that is included in the plans provide sufficient information to permit beam fabrication without the submittal of shop drawings.

Data tables for associated Indexes 20299 and 20502 must also be completed and included in the plans.

Florida-U Beams are typically placed parallel to the cross slope of the bridge deck.

The prestressed beams in these Standard Drawings are generally assumed to act as simple spans under both Dead Load and Live Load even where the deck is detailed to be continuous across the intermediate supports.

When the total initial tensioning force of the fully bonded strands required by design exceeds the values shown below, shield additional strands at the end of the beam when possible. The end reinforcement may only be redesigned to accommodate an increased vertical splitting force when approved by the State Structures Design Office. If approval is granted, Index 20210 and the appropriate Standard Detail Drawings must then be modified for inclusion in the contract documents and signed and sealed by the EOR.

To limit vertical splitting forces in the webs of beams, the maximum prestress force at the beam ends from fully bonded strands must be limited to the following:

Index No.	Beam Type	Max. Bonded Prestress Force	Last Revision Date
20248	Florida-U 48	2790 Kips	07/01/05
20254	Florida-U 54	2790 Kips	07/01/05
20263	Florida-U 63	3070 Kips	07/01/05
20272	Florida-U 72	3070 Kips	07/01/05

Stay-In-Place Metal Forms are required to be used to form the deck within the individual Florida-U Beams.

Due to the absence of external end diaphragms between individual Florida-U Beams, a thickened deck edge beam at deck expansion joints is required to support wheel loads. Generally, the depth of the Edge Beam shall extend from the top of the deck to the bottom face of the top flanges of the Florida-U Beams.

Plan Content Requirements

In the Structures Plans:

Complete the following "FLORIDA-U BEAM - TABLE OF BEAM VARIABLES" and include it in the plans. Use additional sheets when the actual number of beams or strand patterns exceeds the capacity of a single plan sheet using the standard table. Supplemental details and modifications are permitted if special conditions require dimensions, details or notes. However, the "FLORIDA-U BEAM - TABLE OF BEAM VARIABLES" itself should not be modified. See Introduction I.3 for more information regarding use of Data Tables.

Place strands in configurations to distribute stress in the ends of beams and minimize potential for diaphragm cracking.

Report elastic and time dependent shortening effects (DIM R) at the top of the beam @ 120 days. The average of the calculated values for the top and bottom of the beam may be used.

Report DIM P for beams placed on grade if the calculated value is equal or greater than 1" using ⅛" increments.

Round Angle Φ up to the nearest degree.

Specify shear stirrup spacings V1 and V2 for Bars 5K to the nearest inch.

Show fully bonded strands in the following locations to support Bars D:

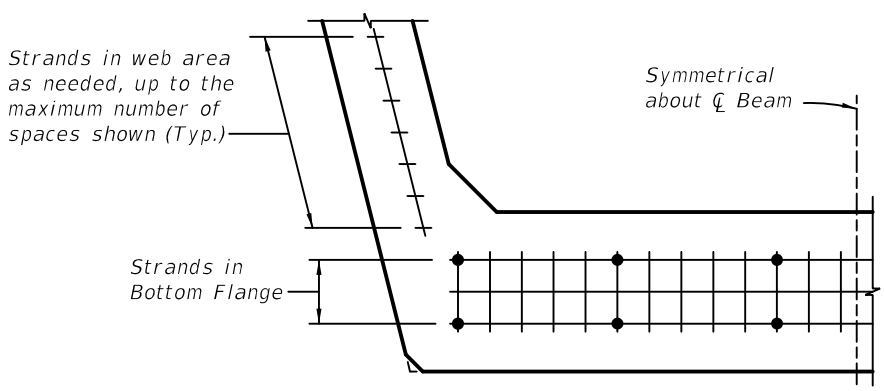

FIGURE 1 (Showing Strand Pattern Only)

Prepare a Framing Plan for bridges meeting the criteria stated in the ***SDM***.

Show Stay-In-Place Metal Form details for the forms within the individual Florida-U Beams.

Design and detail a thickened deck edge beam at deck expansion joints between individual Florida-U Beams.

FLORIDA-U BEAM - TABLE OF BEAM VARIABLES

Table Date 01-01-16

FUB TYPE	LOCATION		CONCRETE PROPERTIES			STND. PTRN. TYPE	END ELEV. COND.	PLAN VIEW CASE		BRG. PLATE MARK ***		END OF BEAM AND BEARING DIMENSIONS **						BEAM DIMENSIONS *		REINFORCING STEEL									
	SPAN NO.	BEAM NO.	CLASS	STRENGTHS (psi) 28 Day	STRENGTHS (psi) Release			END 1	END 2	END 1	END 2	ANGLE Ø END 1	ANGLE Ø END 2	DIM P	DIM J	DIM K1	DIM K2	DIM L	DIM R	4G NO.	4H NO.	4M NO.	5K NO.	NO. OF SPACES BARS 5K & 4M S1	S2	S3	SPACING BARS 5K & 4M * V1	V2	V3

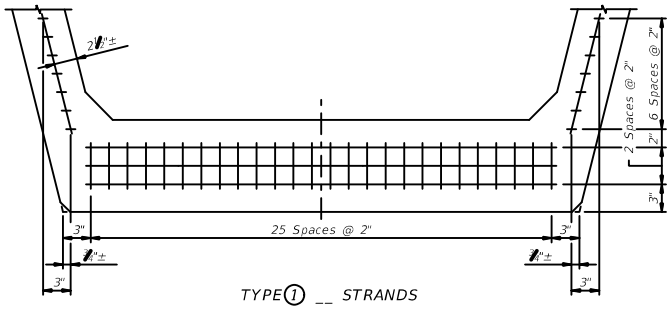

TYPE 1 __ STRANDS

NOTE:
Work this sheet with Design Standards Index Nos. 20210, 20248, 20254, 20263 and 20272.

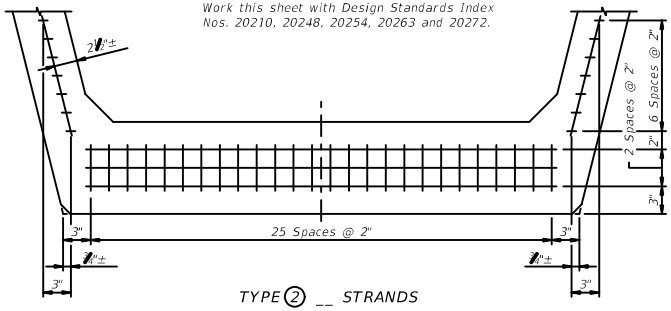

TYPE 2 __ STRANDS

DIMENSION NOTES

* All longitudinal beam dimensions shown on this sheet with a single asterisk (*) are measured along the top of beam at the centerline of beam.

** End of beam bearing dimensions "J" and "K" are measured along the bottom of the beam.

BEARING PLATES

*** Mark indicates beveled bearing plate and embedded bearing plate required. See Index No. 20502 for details.

STRAND DEBONDING LEGEND

- ● - fully bonded strands.
- ⊙ - strands debonded _'-__" from end of beam.
- ⊡ - strands debonded _'-__" from end of beam.
- △ - strands debonded _'-__" from end of beam.
- ◇ - strands debonded _'-__" from end of beam.

NOTE: On beams with skewed ends the debonded length shall be measured along the shielded strand.

STRAND DESCRIPTION: Use _____ Diameter, Grade 270 Low-Relaxation Carbon Steel Strands stressed at _____ kips each. Area per strand equals _____ sq. in.

STRAND PATTERN

Payment

Item number	Item description	Unit Measure
450-4-AAA	Prestressed Beam - FL U-Beam	LF

Example Problem

The following example shows the data required for completion of a Florida-U Beam Table of Beam Variables. The example assumes a two span bridge with Florida-U 72 Beams designed for the following conditions:

Live Load: HL-93

Future Wearing Surface: Design includes allowance for 15 PSF.

Stay-in-Place Metal Forms: Design includes allowance for 20 PSF non-composite dead load over the projected plan area of the forms for the unit weight of metal forms and concrete required to fill the form flutes.

Environment (Superstructure): Moderately Aggressive

Bridge Characteristics:

Length: 249'-4"

Width: 59'-1" (out-to-out)

Clear Roadway: 56'-0"

Superstructure:

Two simple spans of prestressed concrete beams with 8-inch composite deck slab

Span: 124'-8", 124'-8"

Sidewalk: None

Horizontal Alignment: Straight

Vertical Alignment: 0.00% Grade

Skew Angle: 0 degrees

Beam Design:

Beam: Florida-U 72 Beam

Spacing: 21'-0"

Design Span Length: 122'-4"

Composite Dead Load

(per girder): 603 PLF

Non-Composite Dead Load:

124'-8" Span: 4163 PLF

Diaphragm Dead Load:

End: 8.6 kips each

Intermediate: 4.3 kips each

Bonded Strand Development Multiplier = 1.60

Tension Stress Limits at Release as per ***SDG*** Live Load Distribution Factors (interior beam):

Shear: 1.50

Moment: 1.50

Sample Drawing

FLORIDA-U BEAM - TABLE OF BEAM VARIABLES

Table Date 01-01-16

FUB TYPE	LOCATION		CONCRETE PROPERTIES			STND. PTRN. TYPE	END ELEV. COND.	PLAN VIEW CASE		BRG. PLATE MARK ***		END OF BEAM AND BEARING DIMENSIONS **						BEAM DIMENSIONS *		REINFORCING STEEL									
	SPAN NO.	BEAM NO.	CLASS	STRENGTHS (psi) 28 Day	Release			END 1	END 2	END 1	END 2	ANGLE Ø END 1	ANGLE Ø END 2	DIM P	DIM J	DIM K1	DIM K2	DIM L	DIM R	4G NO.	4H NO.	4M NO.	5K NO.	NO. OF SPACES BARS 5K & 4M S1	S2	S3	SPACING BARS 5K & 4M * V1	V2	V3
72	1	1 to 3	VI	8500	6000	1	1	1	1			90°	90°	0"	10½"	1'-2¾"	1'-2"	124'-3½"	2½"	42	84	382	410	30	21	1	9"	1'-0"	1'-1¾"
72	2	1 to 3	VI	8500	6000	1	1	1	1			90°	90°	0"	10½"	1'-2"	1'-2¾"	124'-3½"	2½"	42	84	382	410	30	21	1	9"	1'-0"	1'-1¾"

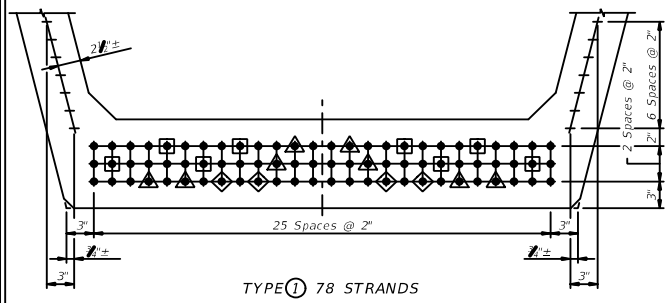

TYPE 1 78 STRANDS

STRAND DESCRIPTION: Use 0.60" Diameter, Grade 270, Low Relaxation Carbon Steel Strands stressed at 43.94 kips each. Area per strand equals 0.217 sq. in.

STRAND PATTERN

NOTE:
Work this sheet with Design Standards Index Nos. 20210, 20248, 20254, 20263 and 20272.

DIMENSION NOTES

* All longitudinal beam dimensions shown on this sheet with a single asterisk (*) are measured along the top of beam at the centerline of beam.

** End of beam bearing dimensions "J" and "K" are measured along the bottom of the beam.

BEARING PLATES

*** Mark indicates beveled bearing plate and embedded bearing plate required. See Index No. 20502 for details.

STRAND DEBONDING LEGEND

- ● - fully bonded strands.
- ⊡ - strands debonded 21'-0" from end of beam.
- △ - strands debonded 24'-0" from end of beam.
- ◇ - strands debonded 27'-6" from end of beam.

NOTE: On beams with skewed ends the debonded length shall be measured along the shielded strand.

REVISIONS

DATE	BY	DESCRIPTION	DATE	BY	DESCRIPTION

DRAWN BY: XXX MM-YY
CHECKED BY: XXX MM-YY
DESIGNED BY: XXX MM-YY
CHECKED BY: XXX MM-YY

STATE OF FLORIDA
DEPARTMENT OF TRANSPORTATION

ROAD NO.	COUNTY	FINANCIAL PROJECT ID

SHEET TITLE: SAMPLE

PROJECT NAME:

REF. DWG. NO.

SHEET NO.

Design Aids

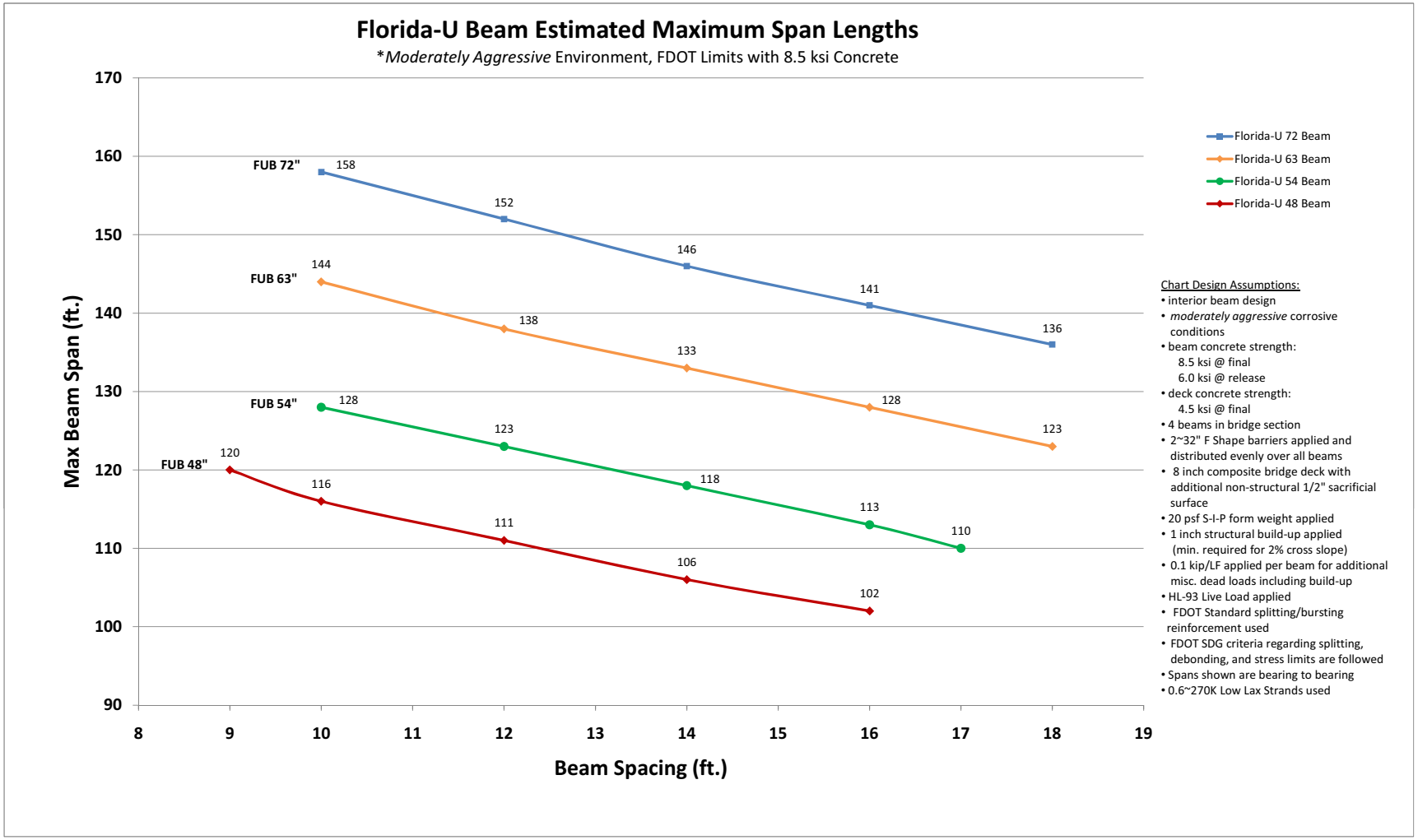
Florida-U Beam Estimated Maximum Span Lengths
*Moderately Aggressive Environment, FDOT Limits with 8.5 ksi Concrete
Max Beam Span (ft.)
Beam Spacing (ft.)
170
160
150
140
130
120
110
100
90
8
9
10
11
12
13
14
15
16
17
18
19
FUB 72"
158
152
146
141
136
FUB 63"
144
138
133
128
123
FUB 54"
128
123
118
113
110
FUB 48"
120
116
111
106
102
Florida-U 72 Beam
Florida-U 63 Beam
Florida-U 54 Beam
Florida-U 48 Beam
Chart Design Assumptions:
• interior beam design
• moderately aggressive corrosive conditions
• beam concrete strength:
8.5 ksi @ final
6.0 ksi @ release
• deck concrete strength:
4.5 ksi @ final
• 4 beams in bridge section
• 2~32" F Shape barriers applied and distributed evenly over all beams
• 8 inch composite bridge deck with additional non-structural 1/2" sacrificial surface
• 20 psf S-I-P form weight applied
• 1 inch structural build-up applied (min. required for 2% cross slope)
• 0.1 kip/LF applied per beam for additional misc. dead loads including build-up
• HL-93 Live Load applied
• FDOT Standard splitting/bursting reinforcement used
• FDOT SDG criteria regarding splitting, debonding, and stress limits are followed
• Spans shown are bearing to bearing
• 0.6~270K Low Lax Strands used

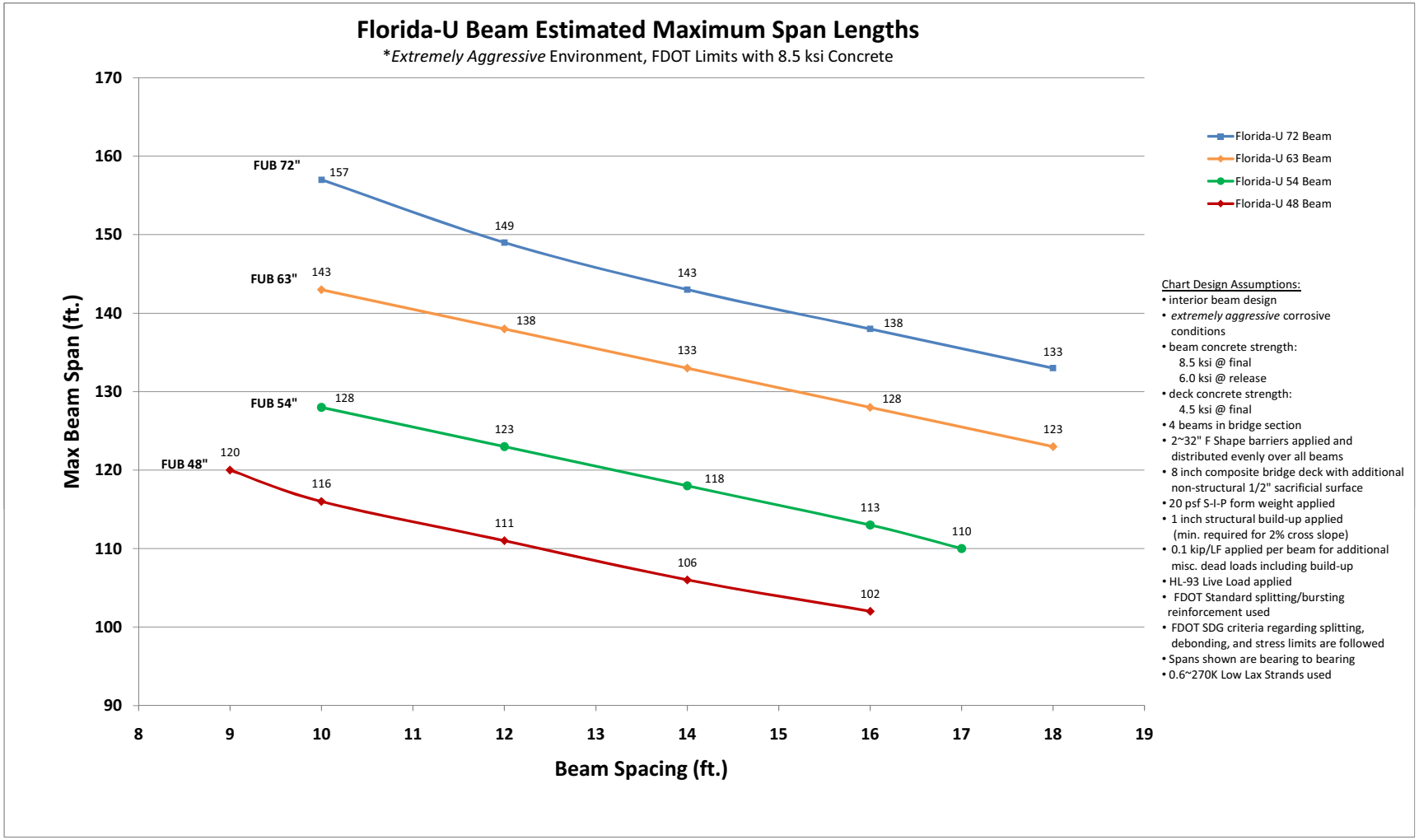
Florida-U Beam Estimated Maximum Span Lengths
*Extremely Aggressive Environment, FDOT Limits with 8.5 ksi Concrete
Max Beam Span (ft.)
Beam Spacing (ft.)
170
160
150
140
130
120
110
100
90
8
9
10
11
12
13
14
15
16
17
18
19
FUB 72"
157
149
143
138
133
FUB 63"
143
138
133
128
123
FUB 54"
128
123
118
113
110
FUB 48"
120
116
111
106
102
Florida-U 72 Beam
Florida-U 63 Beam
Florida-U 54 Beam
Florida-U 48 Beam
Chart Design Assumptions:
• interior beam design
• extremely aggressive corrosive conditions
• beam concrete strength:
8.5 ksi @ final
6.0 ksi @ release
• deck concrete strength:
4.5 ksi @ final
• 4 beams in bridge section
• 2~32" F Shape barriers applied and distributed evenly over all beams
• 8 inch composite bridge deck with additional non-structural 1/2" sacrificial surface
• 20 psf S-I-P form weight applied
• 1 inch structural build-up applied (min. required for 2% cross slope)
• 0.1 kip/LF applied per beam for additional misc. dead loads including build-up
• HL-93 Live Load applied
• FDOT Standard splitting/bursting reinforcement used
• FDOT SDG criteria regarding splitting, debonding, and stress limits are followed
• Spans shown are bearing to bearing
• 0.6~270K Low Lax Strands used

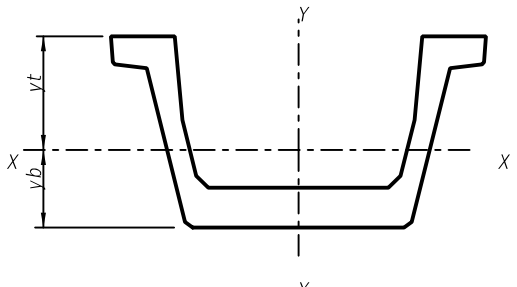

FLORIDA-U 48 BEAM
(INDEX 20248)

FUB-48 SECTION PROPERTIES	
Area (in.^{2})	1,206
Ixx (in.^{4})	321,222
Iyy (in.^{4})	905,815
yt (in.)	28.53
yb (in.)	19.47

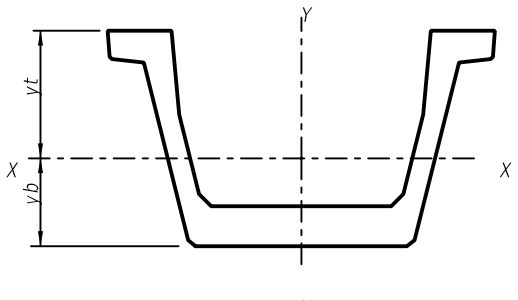

FLORIDA-U 54 BEAM
(INDEX 20254)

FUB-54 SECTION PROPERTIES	
Area (in.^{2})	1,275
Ixx (in.^{4})	439,370
Iyy (in.^{4})	1.026 x 10^6
yt (in.)	31.99
yb (in.)	22.01

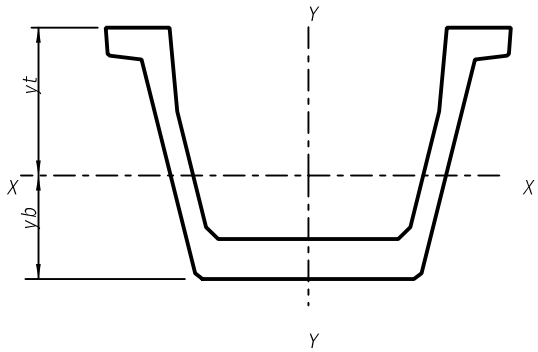

FLORIDA-U 63 BEAM
(INDEX 20263)

FUB-63 SECTION PROPERTIES	
Area (in.^{2})	1,377
Ixx (in.^{4})	659,103
Iyy (in.^{4})	1.222 x 10^6
yt (in.)	37.08
yb (in.)	25.92

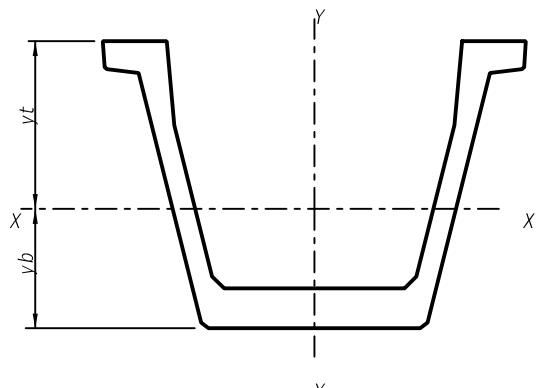

FLORIDA-U 72 BEAM
(INDEX 20272)

FUB-72 SECTION PROPERTIES	
Area (in.^{2})	1,479
Ixx (in.^{4})	933,707
Iyy (in.^{4})	1.438 x 10^6
yt (in.)	42.09
yb (in.)	29.91

Index 20299 Build-Up and Deflection Data for Florida-U Beams

Design Criteria

AASHTO LRFD Bridge Design Specifications; ***Structures Detailing Manual (SDM)***; ***Structures Design Guidelines (SDG)***

Design Assumptions and Limitations

Use this standard in conjunction with Indexes 20210, 20248, 20254, 20263 and 20272.

Unless otherwise required as a design parameter, beam camber for computing the theoretical build-up must be based on 120-day old beam concrete.

Consider the effects of horizontal curvature with bridge deck cross slope when determining the minimum theoretical build-up over the tip of the inside flange. Consider that the vertical curve geometry is along the effective alignment along a chord at the centerline of the beam, which may be different from the alignment parallel to the Profile Grade Line.

For a given size and type of beam, beam camber and associated Dim B and Dim D will vary due to span lengths and beam spacings. Dim B and Dim D will also vary from span to span along the length of a bridge due to deck geometry. To provide for better aesthetics and potentially easier detailing of the supporting pedestals, where possible adjust the values of Dim B and Dim D over equal height beams in adjacent spans so as to allow the beam bottom flanges to line up. Dim B and Dim D do not necessarily have to be the same value for a single beam. See the following sketch:

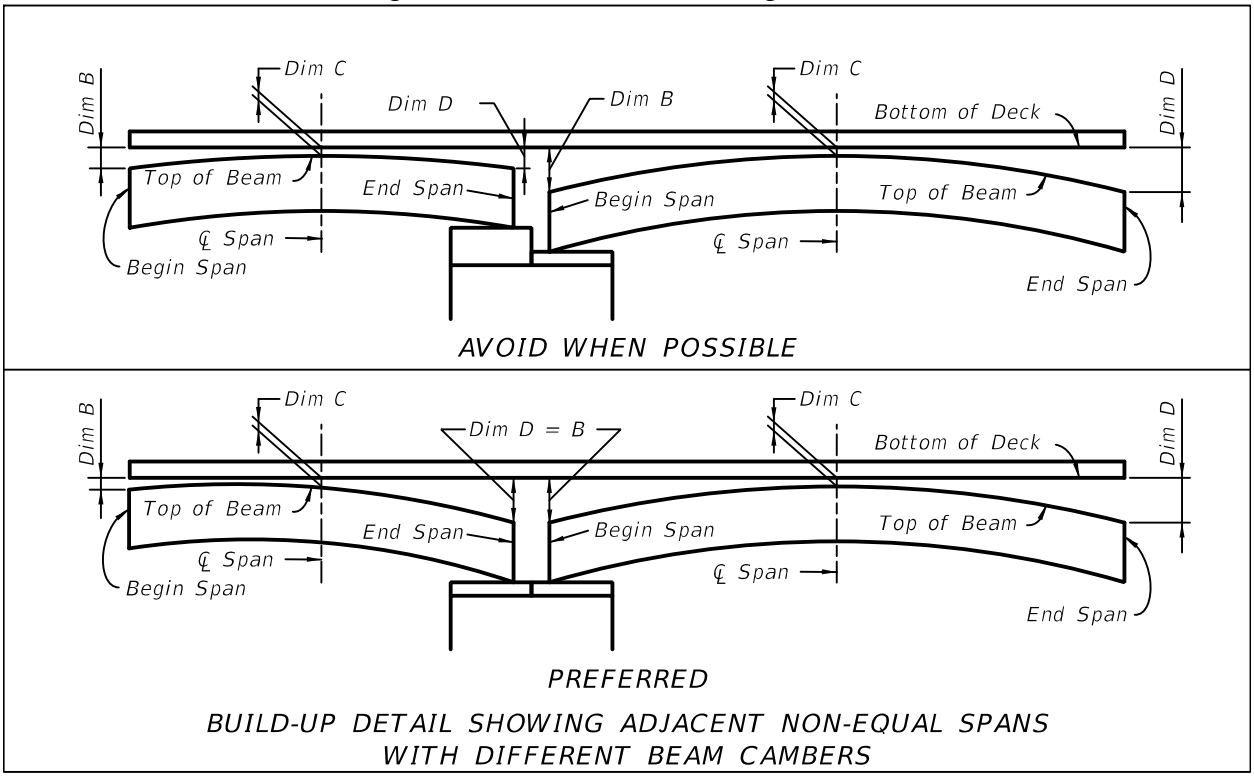

BUILD-UP DETAIL SHOWING ADJACENT NON-EQUAL SPANS WITH DIFFERENT BEAM CAMBERS

Plan Content Requirements

Complete the following "Build-Up and Deflection Data Table for Florida-U Beams" and include it on the superstructure detail sheets. See Introduction I.3 for more information regarding use of Data Tables.

BUILD-UP & DEFLECTION DATA TABLE FOR FLORIDA-U BEAMS										Table Date 01/01/12
LOCATION		REQUIRED THEORETICAL BUILD-UP OVER ℄ LEFT FLANGE			REQUIRED THEORETICAL BUILD-UP OVER ℄ RIGHT FLANGE			NET BEAM CAMBER (PRESTRESS - DEAD LOAD OF BEAM) @ 120 DAYS	DEAD LOAD DEFLECTION DURING DECK POUR @ 120 DAYS DIM A	BUILD-UP CASE NO.
SPAN NO.	BEAM NO.	AT BEGIN SPAN DIM B	AT ℄ SPAN DIM C	AT END SPAN DIM D	AT BEGIN SPAN DIM B	AT ℄ SPAN DIM C	AT END SPAN DIM D			

NOTES: Work this sheet with Design Standard Index No. 20299.

Payment

Include estimated build-up concrete quantities with the estimated deck concrete quantities. Do not break out estimated build-up concrete quantities.

In the absence of more refined calculations, the following method to calculate estimated concrete build-up quantities may be used:

For Case 1, 2 & 3
V = Left Flange + Right Flange:

$$V = \frac{LW\left[C + \left(\frac{B + D - 2C}{6}\right)\right]}{27} + \frac{LW\left[C + \left(\frac{B + D - 2C}{6}\right)\right]}{27}$$

For Case 4
V = Left Flange + Right Flange:

$$V = \frac{LW\left[\left(\frac{B + D}{2}\right) + \left(\frac{2}{3}\left(C - \frac{B + D}{2}\right)\right)\right]}{27} + \frac{LW\left[\left(\frac{B + D}{2}\right) + \left(\frac{2}{3}\left(C - \frac{B + D}{2}\right)\right)\right]}{27}$$

Where:

V = Total Volume of build-up per beam (CY)

L = Beam Length (ft)

W = Width of beam top flange (ft)

B; C; D = Build-up Thickness (ft)

Index 20502 Beveled Bearing Plate Details Prestressed Florida-U Beams

Design Criteria

AASHTO LRFD Bridge Design Specifications, 6th Edition; ***Structures Detailing Manual (SDM)***; ***Structures Design Guidelines (SDG)***

Design Assumptions and Limitations

This Index contains generic details and notes for beveled and embedded bearing plates for use with Prestressed Florida-U Beams. Completion of the "Bearing Plate Data Table" is required. Use this standard with Indexes 20210, 20248, 20254, 20263 and 20272.

Embedded Bearing Plates A and Beveled Bearing Plates B are required for all beams on grades greater than 2%.

Plan Content Requirements

In the Structures Plans:

Bearing seats (pedestals) may be finished level for beam grades less than 0.5%.

For beam grades between 0.5% and 2%, show the bearing seats (pedestals) to be finished parallel to the beam grade with no allowance for beam camber or deflection.

For beam grades greater than 2%, show the bearing seats (pedestals) to be finished level and use Bearing Plates A and B.

Complete the following "BEARING PLATE DATA TABLE" and include it in the plans when Bearing Plates are required. Fill in the table to correspond with data on the 'TABLE OF BEAM VARIABLES' using inch units for Beveled Plate dimensions 'W', 'X', 'Y' & 'Z' rounded to 1/16th of an inch. See Introduction I.3 for more information regarding use of Data Tables.

Use the average deck cross slope perpendicular to centerline of beam from End 1 and End 2, for the beam cross slope for spans with superelevation transitions.

Use the following equations to determine the Beveled Plate thicknesses for 'PLAN VIEW CASES' and 'END ELEVATION CONDITIONS' corresponding to those shown on Index 20210, when single pedestals are used beneath the beam ends. For split pedestals beneath double bearings, adjust the upper pedestal elevation to utilize the same thickness bearing plate on the left and right sides of the beam as shown below. Slope and Cross Slope parameters in these equations require decimal units and correct sign convention:

END 1	END 2
(I) PLAN VIEW CASE 1 (No Skew):	
(a) END ELEVATION CONDITION 1 (Positive Slope)	
(i) Positive Cross Slope (C.S.), Single Bearing & Left Side Double Bearing	
W = 0.5" + (C) x Slope + (D) x C.S.	W = 0.5" + (D) x C.S.
X = 0.5" + (C) x Slope	X = 0.5"
Y = 0.5"	Y = 0.5" + (C) x Slope
Z = 0.5" + (D) x C.S.	Z = 0.5" + (C) x Slope + (D) x C.S.
(ii) Negative Cross Slope (C.S.), Single Bearing & Right Side Double Bearing	
W = 0.5" + (C) x Slope	W = 0.5"
X = 0.5" + (C) x Slope - (D) x C.S.	X = 0.5" - (D) x C.S.
Y = 0.5" - (D) x C.S.	Y = 0.5" + (C) x Slope - (D) x C.S.
Z = 0.5"	Z = 0.5" + (C) x Slope
(iii) Positive Cross Slope (C.S.), Right Side Double Bearing	
W = 0.5" + (C) x Slope + (2D+E) x C.S.	W = 0.5" + (2D+E) x C.S.
X = 0.5" + (C) x Slope + (D+E) x C.S.	X = 0.5" + (D+E) x C.S.
Y = 0.5" + (D+E) x C.S.	Y = 0.5" + (C) x Slope + (D+E) x C.S.
Z = 0.5" + (2D+E) x C.S.	Z = 0.5" + (C) x Slope + (2D+E) x C.S.
(iv) Negative Cross Slope (C.S.), Left Side Double Bearing	
W = 0.5" + (C) x Slope - (D+E) x C.S.	W = 0.5" - (D+E) x C.S.
X = 0.5" + (C) x Slope - (2D+E) x C.S.	X = 0.5" - (2D+E) x C.S.
Y = 0.5" - (2D+E) x C.S.	Y = 0.5" + (C) x Slope - (2D+E) x C.S.
Z = 0.5" - (D+E) x C.S.	Z = 0.5" + (C) x Slope - (D+E) x C.S.
(b) END ELEVATION CONDITION 3 (Negative Slope)	
(i) Positive Cross Slope (C.S.), Single Bearing & Left Side Double Bearing	
W = 0.5" + (D) x C.S.	W = 0.5" - (C) x Slope + (D) x C.S.
X = 0.5"	X = 0.5" - (C) x Slope
Y = 0.5" - (C) x Slope	Y = 0.5"
Z = 0.5" - (C) x Slope + (D) x C.S.	Z = 0.5" + (D) x C.S.

END 1	END 2
(ii) Negative Cross Slope (C.S.), Single Bearing & Right Side Double Bearing	
W = 0.5"	W = 0.5" - (C) x Slope
X = 0.5" - (D) x C.S.	X = 0.5" - (C) x Slope - (D) x C.S.
Y = 0.5" - (C) x Slope - (D) x C.S.	Y = 0.5" - (D) x C.S.
Z = 0.5" - (C) x Slope	Z = 0.5"
(iii) Positive Cross Slope (C.S.), Right Side Double Bearing	
W = 0.5" + (2D+E) x C.S.	W = 0.5" - (C) x Slope + (2D+E) x C.S.
X = 0.5" + (D+E) x C.S.	X = 0.5" - (C) x Slope + (D+E) x C.S.
Y = 0.5" - (C) x Slope + (D+E) x C.S.	Y = 0.5" + (D+E) x C.S.
Z = 0.5" - (C) x Slope + (2D+E) x C.S.	Z = 0.5" + (2D+E) x C.S.
(iv) Negative Cross Slope (C.S.), Left Side Double Bearing	
W = 0.5" - (D+E) x C.S.	W = 0.5" - (C) x Slope - (D+E) x C.S.
X = 0.5" - (2D+E) x C.S.	X = 0.5" - (C) x Slope - (2D+E) x C.S.
Y = 0.5" - (C) x Slope - (2D+E) x C.S.	Y = 0.5" - (2D+E) x C.S.
Z = 0.5" - (C) x Slope - (D+E) x C.S.	Z = 0.5" - (D+E) x C.S.
(II) PLAN VIEW CASE 2:	
(a) END ELEVATION CONDITION 1 OR 2 (Positive Slope)	
(i) Positive Cross Slope (C.S.), Single Bearing & Left Side Double Bearing	
W = 0.5" + (C+D/tan Φ) x Slope + (D) x C.S.	W = 0.5" + (D) x C.S.
X = 0.5" + (C+D/tan Φ) x Slope	X = 0.5"
Y = 0.5"	Y = 0.5" + (C) x Slope
Z = 0.5" + (D/tan Φ) x Slope + (D) x C.S.	Z = 0.5" + (C+D/tan Φ) x Slope + (D) x C.S.
(ii) Negative Cross Slope (C.S.), Single Bearing & Right Side Double Bearing	
W = 0.5" + (C) x Slope	W = 0.5"
X = 0.5" + (C) x Slope - (D) x C.S.	X = 0.5" - (D) x C.S.
* Y = 0.5" - (D/tan f) x Slope - (D) x C.S.	Y = 0.5" + (C) x Slope - (D) x C.S.
Z = 0.5"	Z = 0.5" + (C+D/tan Φ) x Slope

END 1	END 2
(iii) Positive Cross Slope (C.S.), Right Side Double Bearing	
W = 0.5"+[(2D+E)/tanΦ+C] xSlope+(2D+E)xC.S.	W = 0.5" + (D+E)/tan Φ x Slope + (2D+E) x C.S.
X = 0.5"+[(2D+E)/tanΦ+C]xSlope+(D+E)xC.S.	X = 0.5" + (D+E)/tan Φ x Slope + (D+E) x C.S.
Y = 0.5" + (D+E)/tan Φ x Slope + (D+E) x C.S.	Y = 0.5"+[(D+E)/tanΦ+C]xSlope+(D+E)xC.S.
Z = 0.5" + (2D+E)/tan Φ x Slope + (2D+E) x C.S.	Z = 0.5"+[(2D+E)/tanΦ+C]xSlope+(2D+E)xC.S.
(iv) Negative Cross Slope (C.S.), Left Side Double Bearing	
W = 0.5" + [C-(D+E)/tan Φ] x Slope - (D+E) x C.S.	* W = 0.5" - (D+E)/tan Φ x Slope - (D+E) x C.S.
X = 0.5" + [C-(D+E)/tan Φ] x Slope-(2D+E) x C.S.	* X = 0.5" - (D+E)/tan Φ x Slope - (2D+E) x C.S.
* Y = 0.5" - (2D+E)/tan Φ x Slope - (2D+E) x C.S.	Y = 0.5" + [C-(D+E)/tan Φ] x Slope-(2D+E) x C.S.
* Z = 0.5" - (D+E)/tan Φ x Slope - (D+E) x C.S.	Z = 0.5" + [C - E/tan Φ] x Slope - (D+E) x C.S.
(b) END ELEVATION CONDITION 3 (Negative Slope)	
(i) Positive Cross Slope (C.S.), Single Bearing & Left Side Double Bearing	
W = 0.5" + (D) x C.S.	W = 0.5" - (C) x Slope + (D) x C.S.
X = 0.5"	X = 0.5" - (C) x Slope
Y = 0.5" - (C+D/tan Φ) x Slope	Y = 0.5"
Z = 0.5" - (C) x Slope + (D) x C.S.	* Z = 0.5" + (D/tan Φ) x Slope + (D) x C.S.
(ii) Negative Cross Slope (C.S.), Single Bearing & Right Side Double Bearing	
W = 0.5"	W = 0.5" - (C+D/tan Φ) x Slope
X = 0.5" - (D) x C.S.	X = 0.5" - (C+D/tan Φ) x Slope - (D) x C.S.
Y = 0.5" - (C+D/tan Φ) x Slope - (D) x C.S.	Y = 0.5" - (D/tan Φ) x Slope - (D) x C.S.
Z = 0.5" - (C) x Slope	Z = 0.5"
(iii) Positive Cross Slope (C.S.), Right Side Double Bearing	
* W = 0.5"+(D+E)/tan Φ x Slope+(2D+E) x C.S.	W = 0.5" - [C-(D+E)/tanΦ] x Slope+(2D+E) x C.S.
* X = 0.5" + (D+E)/tan Φ x Slope + (D+E) x C.S.	X = 0.5" - [C-(D+E)/tanΦ] x Slope + (D+E) x C.S.
Y = 0.5" - [C-E/tan Φ] x Slope + (D+E) x C.S.	* Y = 0.5" + (D+E)/tan Φ x Slope + (D+E) x C.S.
Z = 0.5" - [C-(D+E)/tanΦ] x Slope + (2D+E) x C.S.	* Z = 0.5" + (2D+E)/tan Φ x Slope+(2D+E) x C.S.

END 1	END 2
(iv) Negative Cross Slope (C.S.), Left Side Double Bearing	
W = 0.5" - (D+E)/tan Φ x Slope - (D+E) x C.S.	W = 0.5" - [C+(2D+E)/tanΦ] x Slope-(D+E) x C.S.
X = 0.5" - (D+E)/tan Φ x Slope - (2D+E) x C.S.	X = 0.5" - [C+(2D+E)/tanΦ] x Slope-(2D+E) x C.S.
Y = 0.5" - [C+(2D+E)/tanΦ] x Slope-(2D+E) x C.S.	Y = 0.5" - (2D+E)/tan Φ x Slope - (2D+E) x C.S.
Z = 0.5" - [C + (D+E)/tan Φ] x Slope - (D+E) x C.S.	Z = 0.5" - (D+E)/tan Φ x Slope - (D+E) x C.S.
(III) PLAN VIEW CASE 3:	
(a) END ELEVATION CONDITION 1 OR 2 (Positive Slope)	
(i) Positive Cross Slope (C.S.), Single Bearing & Left Side Double Bearing	
W = 0.5" + (C) x Slope + (D) x C.S.	W = 0.5" + (D) x C.S.
X = 0.5" + (C) x Slope	X = 0.5"
Y = 0.5"	Y = 0.5" + (C+D/tan Φ) x Slope
* Z = 0.5" - (D/tan Φ) x Slope + (D) x C.S.	Z = 0.5" + (C) x Slope + (D) x C.S.
(ii) Negative Cross Slope, Single Bearing & Right Side Double Bearing	
W = 0.5" + (C+D/tan Φ) x Slope	W = 0.5"
X = 0.5" + (C+D/tan Φ) x Slope-(D) x C.S.	X = 0.5" - (D) x C.S.
Y = 0.5" - (D/tan Φ) x Slope - (D) x C.S.	Y = 0.5" + (C+D/tan Φ) - (D) x C.S.
Z = 0.5"	Z = 0.5" + (C) x Slope
(iii) Positive Cross Slope, Right Side Double Bearing	
W = 0.5"+[C-(D+E)/tanΦ] x Slope+(2D+E) x C.S.	* W = 0.5" - (D+E)/tanΦ x Slope + (2D+E) x C.S.
X = 0.5" + [C-(D+E)/tanΦ] x Slope+(D+E) x C.S.	* X = 0.5" - (D+E)/tanΦ x Slope + (D+E) x C.S.
* Y = 0.5" - (D+E)/tanΦ x Slope + (D+E) x C.S.	Y = 0.5" + (C-E/tanΦ] x Slope + (D+E) x C.S.
* Z = 0.5" - (2D+E)/tanΦ x Slope+(2D+E) x C.S.	Z = 0.5" + [C-(D+E)/tanΦ] x Slope+(2D+E) x C.S.
(iv) Negative Cross Slope, Left Side Double Bearing	
W = 0.5"+[C+(2D+E)/tanΦ] x Slope-(D+E) x C.S.	W = 0.5" + (D+E)/tanΦ x Slope - (D+E) x C.S.
X = 0.5"+[C+(2D+E)/tanΦ] x Slope-(2D+E) x C.S.	X = 0.5" + (D+E)/tanΦ x Slope - (2D+E) x C.S.
Y = 0.5" + (2D+E)/tan Φ x Slope - (2D+E) x C.S.	Y = 0.5"+[C+(2D+E)/tanΦ] x Slope-(2D+E) x C.S.
Z = 0.5" + (D+E)/tanΦ x Slope - (D+E) x C.S.	Z = 0.5" + [C + (D+E)/tanΦ] x Slope - (D+E) x C.S.

END 1	END 2
(b) END ELEVATION CONDITION 3 (Negative Slope)	
(i) Positive Cross Slope (C.S.), Single Bearing & Left Side Double Bearing	
W = 0.5" + (D) x C.S.	W = 0.5"-(C+D/tan Φ) x Slope+(D) x C.S.
X = 0.5"	X = 0.5" - (C+D/tan Φ) x Slope
Y = 0.5" - (C) x Slope	Y = 0.5"
Z = 0.5"-[C+D/tan Φ] x Slope + (D) x C.S.	Z = 0.5" - (D/tan Φ) x Slope + (D) x C.S.
(ii) Negative Cross Slope (C.S.), Single Bearing & Right Side Double Bearing	
W = 0.5"	W = 0.5" - (C) x Slope
X = 0.5" - (D) x C.S.	X = 0.5" - (C) x Slope - (D) x C.S.
Y = 0.5" - (C) x Slope - (D) x C.S.	Y = 0.5" + (D/tan Φ) x Slope - (D) x C.S.
Z = 0.5" - (C+D/tan Φ) x Slope	Z = 0.5"
(iii) Positive Cross Slope (C.S.), Right Side Double Bearing	
W = 0.5" - (D+E)/tan Φ x Slope + (2D+E) x C.S.	W = 0.5"-[C+(2D+E)/tanΦ] x Slope+(2D+E) x C.S.
X = 0.5" - (D+E)/tan Φ x Slope + (D+E) x C.S.	X = 0.5"-[C+(2D+E)/tanΦ] x Slope+(D+E) x C.S.
Y = 0.5"-[C + (D+E)/tanΦ] x Slope + (D+E) x C.S.	Y = 0.5" - (D+E)/tan Φ x Slope + (D+E) x C.S.
Z = 0.5"-[C+(2D+E)/tanΦ] x Slope+(2D+E) x C.S.	Z = 0.5" - (2D+E)/tan Φ x Slope + (2D+E) x C.S.
(iv) Negative Cross Slope (C.S.), Left Side Double Bearing	
* W = 0.5" + (D+E)/tan Φ x Slope - (D+E) x C.S.	W = 0.5" - [C - (D+E)/tanΦ] x Slope - (D+E) x C.S.
* X = 0.5" + (D+E)/tan Φ x Slope - (2D+E) x C.S.	X = 0.5" - [C - (D+E)/tanΦ] x Slope-(2D+E) x C.S.
Y = 0.5"-[C - (D+E)/tanΦ] x Slope - (2D+E) x C.S.	* Y = 0.5" + (2D+E)/tanΦ x Slope - (2D+E) x C.S.
Z = 0.5" - [C - (E)/tan Φ] x Slope - (D+E) x C.S.	* Z = 0.5" + (D+E)/tan Φ x Slope - (D+E) x C.S.

* Could be less than 0.5" for steep slopes. Adjust plate thickness equally at all corners of both left and right side plates to provide a minimum 0.5" thickness.

BEARING PLATE DATA TABLE

Table Date 1-01-08

GENERAL BEARING PLATE DATA									EMBEDDED PLATE DIMENSIONS (PLATE A) (inches)			BEVELED PLATE REQUIRED (Yes/No)	BEVELED PLATE DIMENSIONS (PLATE B) (inches)						
BRG. PLATE MARK ***	SPAN NO(s).	BEAM NO(s).	BEARING TYPE	BEAM END	PLAN VIEW CASE	CROSS SLOPE (%) ##	SLOPE (%) **	ANGLE Ø *	C	D	C+D/TAN Ø		C	D	C+D/TAN Ø	W	X	Y	Z

NOTES:
* Ø = Acute angle (≤ 90°) measured from left or right side of ℄ Beam as required (See Plan View Case No.).
** Slope measured along ℄ of Beam at ℄ of Bearing.
Cross Slope measured perpendicular to ℄ of Beam at bottom of beam.
*** See "TABLE OF BEAM VARIABLES" and Index No. 20210.
See Index No. 20502 for additional notes and details.

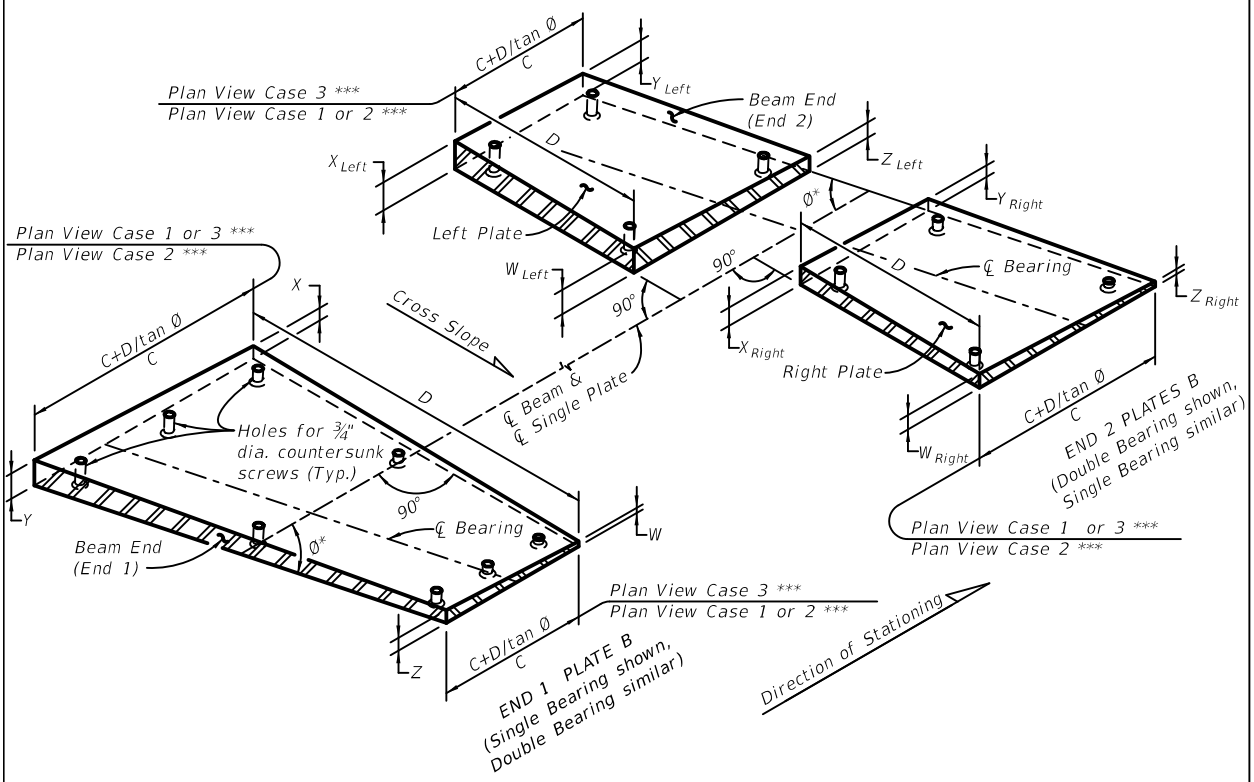

ISOMETRIC VIEW OF BEVELED BEARING PLATES FOR FLORIDA-U BEAMS
(SKEWED PLATES SHOWN, NON-SKEWED PLATES SIMILAR)

Payment

The cost of beveled and embedded bearing plates is incidental to the cost of the prestressed beams they are used with. No separate payment is made.

Index 20510 Composite Elastomeric Bearing Pads-Prestressed Florida-I and AASHTO Type II Beams

Design Criteria

AASHTO LRFD Bridge Design Specifications, 6th Edition; ***Structures Design Guidelines (SDG)***

Design Assumptions and Limitations

This standard depicts details and notes for elastomeric bearing pads for prestressed concrete Florida-I and AASHTO Type II Beams with or without skewed end conditions.

This standard is intended for use with prestressed concrete Florida-I and AASHTO Type II Beams, but may be used for steel girder or other bridge types with the appropriate notes and cross references.

This standard may be used with Indexes 20010, 20036, 20045, 20054, 20063, 20072, 20078, 20084, 20096, 20120, 20511 and 20512.

Beveled Bearing Plates B are required for beams on grades greater than 2%, see instructions for Index 20511 and/or 20512.

LIMITING PARAMETERS FOR COMPOSITE ELASTOMERIC BEARING PADS USED WITH FDOT STANDARD FLORIDA-I AND AASHTO TYPE II BEAMS

Pad Type	Maximum Service Live Load (kips)	Maximum Service Dead Load (LL = Actual Service Live Load)	Bearing Skew Angle (degrees)	Maximum Shear Deflection (in)	Shear Modulus, G (Psi)
AA	65	DL=85+1.75(65-LL)	0-15	0.75	110
AB	85	DL=95+1.75(85-LL)	0-30	1.0	150
D	135	DL=147+1.75(135-LL)	0 - 5	0.75	110
	110	DL=120+1.75(110-LL)	0 - 15		
E	150	DL=233+1.75(150-LL)	0 - 5	0.75	110
	110	DL=113+1.75(110-LL)	0 - 20		
F	150	DL=290+1.75(150-LL)	0 - 5	1.0	110
	120	DL=139+1.75(120-LL)	0 - 30		
G	145	DL=230+1.75(145-LL)	0 - 30	1.0	150
	95	DL=98+1.75(95-LL)	0 - 45		
H	180	DL=268+1.75(180-LL)	0 - 35	1.25	150
	135	DL=230+1.75(135-LL)	0 - 45		
J	145	DL=227+1.75(145-LL)	0 - 45	1.5	150
K	200	DL=383+1.75(200-LL)	0 - 45	1.5	150

Skew angle for Bearing Pad design is based on the direction of rotation with respect to the centerline of the Bearing Pad; and is usually taken as the angle between the centerline of the beam and the longitudinal centerline of the Bearing Pad, except on curved bridges.

The Service Live Load (including impact) and Service Dead Load Reactions can be determined from the beam design. The Shear Deflection is the product of the coefficient of thermal expansion, 65% of the thermal gradient and the length of bridge contributing to movement, plus the contributing beam creep and shrinkage at the bottom of beam. Assume beam creep and shrinkage from day 120 to day 240 (this value can be determined from data in the beam design output).

Standard Elastomeric bearing pads have been designed in accordance with the ***AASHTO LRFD Bridge Design Specifications***, Method "B" (2009 Interim), for a maximum static rotation (beam grade, camber and dead load rotation) of 0.0125 radians and a cyclic rotation (live load) of 0.004 radians. Live load rotations are assumed to be in the opposite direction to static rotations. Rotation does not need to be checked for standard prestressed beams provided that the top of the beveled bearing plates (when required) or the bearing seats (pedestals) are finished approximately parallel to the slope of the beam. The effects of camber (at day 120) from prestressing and dead load deflection may be neglected when determining the slope at the ends of the beam, unless the sum of these effects exceeds 0.0125 radians (1.25%). Bearing seats may be finished level for beam grades less than 0.5%, or when the combined effects of beam grade, camber and dead load rotation do not exceed 1.25%. Whenever possible, the bearing seats at each end of the beam should be detailed with the same slope. See also instructions for Index 20511.

For design values exceeding the limiting parameters shown on this sheet, the designer must develop custom designs and details. For skew angles greater than 45°, consider round pads with elastomer and plate thicknesses similar to those shown in Index 20510.

Plan Content Requirements

In the Structures Plans:

Complete the "BEARING PAD DATA TABLE" and include the table on the supplemental sheets. See Introduction I.3 for more information regarding use of Data Tables.

The "BEARING PAD DATA TABLE" is intended for use with prestressed beam bridges, but may be modified for steel girder or other bridge types. Supplement this table with additional columns or notes as required to clearly identify the location and type of bearing pads.

For beam grades greater than 2%, provide beveled bearing plates in accordance with Index 20511 and include a "BEARING PLATE DATA TABLE" in the plans.

BEARING PAD DATA TABLE				Table Date 7-01-13
SPAN NO(s).	BEAM NO(s).	PAD TYPE	BEAM TYPE	BEAM END *

NOTE [Notes Date 07-01-14]:
Work this table with Index No. 20510 for Pad Types AA, AB, D, E, F, G, H, J & K, and/or any project specific bearing pads.
* END 1 = Begin Bridge end of beam (Back station).
END 2 = End Bridge end of beam (Ahead station).

Payment

Item number	Item description	Unit Measure
400-147	Composite Neoprene Pads	CF

Examples

The following examples show the information required to determine the correct standard elastomeric bearing pad type to use. These examples do not assume any wind or braking loads are applied to the elastomeric bearing pads.

EXAMPLE 1

Given Information:

Superstructure Type - One Simple Span
45" Florida I Beams 101'-0" long, spaced at 9'-0" centers
(99'-8" center to center bearing)
No longitudinal restraints except friction between the pad and the concrete substructure
Service Live Load Reaction = 106 kips
Service Dead Load Reaction = 109 kips
Coefficient of Thermal Expansion = 0.000006/°F
Thermal Gradient = 70°F
Creep and Shrinkage at the Bottom of Beam (from day 120 to day 240) = 0.28"
Shear Deflection = (0.000006/°F x 0.65 x 70°F x 99.67'/2 x 12"/') + 0.280"/2 = 0.30"
Beam Grade = 2.0%
Bearing Pad Skew Angle = 15°

Service Dead Load Rotation = 0.007 radians (0.7%)
Beam Camber Rotation @ 120 days = 0.012 radians (1.2%)
Net Beam Camber Rotation after Dead Load Deflection = 0.012 - 0.007 = 0.005 radians (0.5%)

Elastomeric Bearing Pad Type Determination:

Compare the design values to the Limiting Parameters Table, Pad Type D for Florida-I Beams.

Limiting Parameters versus Design Values:

Maximum Service Live Load Reaction of 110 kips versus Design Value of 106 kips; therefore, OK

Maximum Service Dead Load Reaction of 120+1.75(110-106) = 127 kips versus Design Value of 109 kips; therefore, OK

Maximum Shear Deflection of 0.75" versus Design Value of 0.30"; therefore, OK

Skew Angle is between 0° and 15°; therefore, OK

Conclusion:

Use Elastomeric Bearing Pad Type D.

No beveled plate is required. Detail beam seat with a 2% slope along the centerline of beam.

Complete "BEARING PLATE DATA TABLE" for embedded bearing plate only, see instructions for Index 20511 and/or 20512.

EXAMPLE 2

Given Information:

Superstructure Type - Four Simple Spans with Continuous Deck
45" Florida I Beams 101'-0" long, spaced at 9'-0" centers
(99'-8" center to center bearing)
No longitudinal restraints except friction between the pad and the concrete substructure
Service Live Load Reaction = 106 kips
Service Dead Load Reaction = 109 kips
Coefficient of Thermal Expansion = 0.000006/°F
Thermal Gradient = 70°F
Creep and Shrinkage at the Bottom of each Beam (from day 120 to day 240) = 0.28"
Shear Deflection = (0.000006/°F x 65% x 70°F x 202' x 12"/') + 0.280"/2 = 0.80"
Beam Grade = 5%
Bearing Pad Skew Angle = 15°
Service Dead Load Rotation = 0.007 radians (0.7%)
Beam Camber Rotation @ 120 days = 0.012 radians (1.2%)
Net Beam Camber Rotation after Dead Load Deflection = 0.012 - 0.007 = 0.005 radians (0.5%)

Elastomeric Bearing Pad Type Determination:

Compare the design values to the Limiting Parameters Table, Pad Type F for Florida-I Beams.

Limiting Parameters versus Design Values:

Maximum Service Live Load Reaction of 120 kips versus Design Value of 106 kips; therefore, OK

Maximum Service Dead Load Reaction of 139+1.75(120-106) = 163.5 kips versus Design Value of 109 kips; therefore, OK

Maximum Shear Deflection of 1.0" versus Design Value of 0.80"; therefore, OK

Skew angle is between 0° and 30°; therefore, OK

Conclusion:

Use Elastomeric Bearing Pad Type F. Additionally, because beam end slope exceeds 2%, include a beveled bearing plate in the "BEARING PLATE DATA TABLE" and detail bearing seats level, see instructions for Index 20511 and/or 20512. Neglect the effects of net beam camber in the beveled bearing plate design since rotation is less than 0.0125 radians.

Index 20511 Bearing Plates (Type 1) - Prestressed Florida-I and AASHTO Type II Beams

Design Criteria

AASHTO LRFD Bridge Design Specifications, 6th Edition; ***Structures Design Guidelines (SDG)***

Design Assumptions and Limitations

This standard is intended for use on bridge widenings (with or without end diaphragms) where squared end beams are not feasible as determined by the EOR. For all other cases, use Index 20512 and its Instructions. Index 20512 may be used for all projects with squared end beams, with or without end diaphragms.

This standard contains generic details and notes for beveled and embedded bearing plates for prestressed concrete Florida-I and AASHTO Type II Beams with or without skewed end conditions.

Use this standard with Indexes 20010, 20036, 20045, 20054, 20063, 20072, 20078, 20084, 20096, 20120 and 20510.

Embedded Bearing Plates A are required for all Florida-I Beams (FIBs). Embedded Bearing Plates A and Beveled Bearing Plates B are required for beams on grades greater than 2%.

Embedded Plates A are cast into the beams 1½" from the beam ends. The position of the centerline of Beveled Plates B is dependent on the presence or absence of end diaphragms, ensuring the minimum bearing length for ***LRFD*** seismic requirements is satisfied.

Plan Content Requirements

In the Structures Plans:

Bearing seats (pedestals) may be finished level for beam grades less than 0.5%. Use Embedded Bearing Plates A but do not use Beveled Bearing Plates B.

For beam grades between 0.5% and 2%, show the bearing seats (pedestals) to be finished parallel to the beam grade with no allowance for beam camber or deflection when less than the limits specified in ***SDG*** 6.5.1. Use Embedded Bearing Plates A for FIBs but do not use Beveled Bearing Plates B.

For beam grades greater than 2%, show the bearing seats (pedestals) to be finished level and use Bearing Plates A and B. Refer to ***SDG*** 6.5.1 for consideration of beam camber and deflection effects.

Also see instructions for Index 20510.

Complete the following "BEARING PLATE DATA TABLE" and include it in the plans. Fill in the table to correspond with data on the appropriate "TABLE OF BEAM VARIABLES" using inch units for Beveled Plate dimensions 'W', 'X', 'Y' & 'Z' rounded to 1/16th of an inch. If

Beveled Bearing Plates B are not required, fill in the corresponding columns with "N/A". See Introduction I.3 for more information regarding use of Data Tables.

Use the following equations to determine the Beveled Bearing Plate B thicknesses for "PLAN VIEW CASES"' and "END ELEVATION CONDITIONS"' corresponding to those shown on Index 20010 or 20120. The Slope parameter in these equations requires decimal units and correct sign convention:

END 1	END 2
(I) PLAN VIEW CASE 1:	
(a) END ELEVATION CONDITION 1 or 2 (Positive Slope)	
W = X = 0.5" + (C) x Slope	W = X = 0.5"
Y = Z = 0.5"	Y = Z = 0.5" + (C) x Slope
(b) END ELEVATION CONDITION 1 or 3 (Negative Slope)	
W = X = 0.5"	W = X = 0.5" - (C) x Slope
Y = Z = 0.5" - (C) x Slope	Y = Z = 0.5"
(II) PLAN VIEW CASE 2:	
(a) END ELEVATION CONDITION 1 or 2 (Positive Slope)	
W = 0.5" + (C / sin Φ + D / tan Φ) x Slope	W = 0.5" + (D / tan Φ) x Slope
X = 0.5" + (C / sin Φ) x Slope	X = 0.5"
Y = 0.5"	Y = 0.5" + (C / sin Φ) x Slope
Z = 0.5" + (D / tan Φ) x Slope	Z = 0.5" + (C / sin Φ + D / tan Φ) x Slope
(b) END ELEVATION CONDITION 1 or 3 (Negative Slope)	
W = 0.5"	W = 0.5" - (C / sin Φ) x Slope
X = 0.5" - (D / tan Φ) x Slope	X = 0.5" - (C / sin Φ + D / tan Φ) x Slope
Y = 0.5" - (C / sin Φ + D / tan Φ) x Slope	Y = 0.5" - (D / tan Φ) x Slope
Z = 0.5" - (C / sin Φ) x Slope	Z = 0.5"
(III) PLAN VIEW CASE 3:	
(a) END ELEVATION CONDITION 1 or 2 (Positive Slope)	
W = 0.5"+ (C / sin Φ) x Slope	W = 0.5"
X = 0.5" + (C / sin Φ + D / tan Φ) x Slope	X = 0.5" + (D / tan Φ) x Slope
Y = 0.5" + (D / tan Φ) x Slope	Y = 0.5" + (C / sin Φ + D / tan Φ) x Slope
Z = 0.5"	Z = 0.5" + (C / sin Φ) x Slope
(b) END ELEVATION CONDITION 1 or 3 (Negative Slope)	
W = 0.5" - (D / tan Φ) x Slope	W = 0.5" - (C / sin Φ + D / tan Φ) x Slope
X = 0.5"	X = 0.5" - (C / sin Φ) x Slope
Y = 0.5" - (C / sin Φ) x Slope	Y = 0.5"
Z = 0.5" - (C / sin Φ + D / tan Φ) x Slope	Z = 0.5" - (D / tan Φ) x Slope

For all cases:

E = C / sin Φ

G = 13.5” / sin Φ

BEARING PLATE DATA TABLE - TYPE 1

Table Date 7-01-13

GENERAL BEARING PLATE DATA								EMBEDDED PLATE DIMENSIONS (PLATE A) (inches)		BEVELED PLATE REQUIRED (Yes/No)	BEVELED PLATE DIMENSIONS (PLATE B) (inches)							
BRG. PLATE MARK ***	SPAN NO(s).	BEAM NO(s).	PAD TYPE	BEAM END	PLAN VIEW CASE	SLOPE (%) **	ANGLE Ø *	G	F		C	D	E	F	W	X	Y	Z

NOTES:
See Index No. 20511 for additional notes and details.
* Ø = Acute angle (≤ 90°) measured from left or right side of ℄ Beam as required.
** Slope measured along ℄ of Beam at ℄ of Bearing.
*** See "TABLE OF BEAM VARIABLES" and Index No. 20010 for Florida-I Beams or Index No. 20120 for AASHTO Type II Beams.

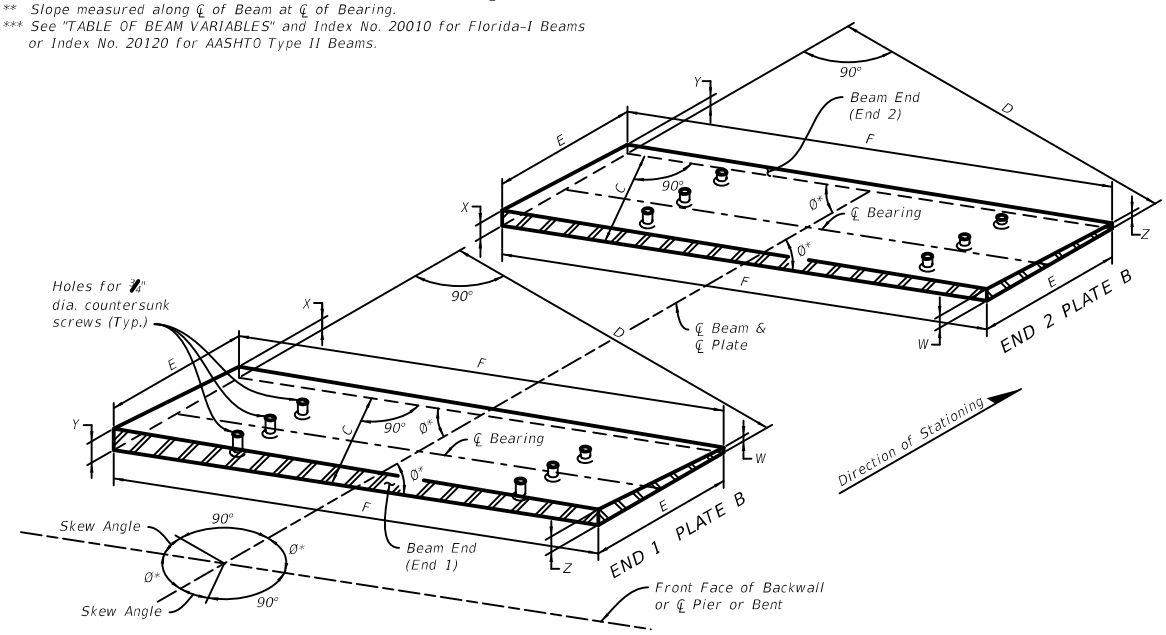

ISOMETRIC VIEW OF BEVELED BEARING PLATES (TYPE 1) FOR FLORIDA I-BEAMS
(SKEWED PLATES SHOWN, NON-SKEWED PLATES AND AASHTO TYPE II BEAMS SIMILAR)

Payment

The cost of beveled and embedded bearing plates is incidental to the cost of the prestressed beams they are used with. No separate payment is made.

Example

A design calls for FIBs with Type F Bearing Pads. The Grade along the PGL and centerline of the beam is negative 2.5% and slope due to camber and deflection is less than 0.0125 radians. The span has a skew of 10°.

Because the slope is greater than the absolute value of 2%, beveled bearing plates are required. From Index 20510 a Type F Bearing Pad is 10" x 2'-8", and the Beveled Bearing Plate (Plate B) has dimensions C = 1'-0" and D = 3'-0". The bridge has a 10° skew (Φ=80°). From Index 20010 using Case 2, End Condition 3 formulas:

End 1	End 2
W=0.5"	W=0.5"-((12"/sin(80°)*(-0.025)) = 0.805"
X=0.5"-((36"/tan(80°)*(-0.025)) = 0.659"	X=0.5"-((12"/sin(80°)+36"/ tan(80°))*(-0.025))=0.963"
Y=0.5"-((12"/sin(80°)+36"/ tan(80°))*(-0.025))=0.963"	Y= 0.5"-((36"/tan(80°)*(-0.025)) = 0.659"
Z=0.5"-((12"/sin(80°)*(-0.025)) = 0.805"	Z= 0.5"

Complete the Table with location information and the following from the example:

BEARING PLATE DATA TABLE - TYPE 1 — Table Date 7-01-13

GENERAL BEARING PLATE DATA								EMBEDDED PLATE DIMENSIONS (PLATE A) (inches)		BEVELED PLATE REQUIRED (Yes/No)	BEVELED PLATE DIMENSIONS (PLATE B) (inches)							
BRG. PLATE MARK ***	SPAN NO(s).	BEAM NO(s).	PAD TYPE	BEAM END	PLAN VIEW CASE	SLOPE (%) **	ANGLE Ø *	G	F		C	D	E	F	W	X	Y	Z
			F	1	2	-2.5	80°	13 11/16	36 9/16	Yes	12	36	12 3/16	36 9/16	1/2	5/8	1	13/16
			F	2	2	-2.5	80°	13 11/16	36 9/16	Yes	12	36	12 3/16	36 9/16	13/16	1	5/8	1/2

NOTES:
See Index No. 20511 for additional notes and details.
* Ø = Acute angle (≤ 90°) measured from left or right side of ℄ Beam as required.
** Slope measured along ℄ of Beam at ℄ of Bearing.
*** See "TABLE OF BEAM VARIABLES" and Index No. 20010 for Florida-I Beams or Index No. 20120 for AASHTO Type II Beams.

Index 20512 Bearing Plates (Type 2)- Prestressed Florida-I and AASHTO Type II Beams

Design Criteria

AASHTO LRFD Bridge Design Specifications, 6th Edition; ***Structures Design Guidelines (SDG)***

Design Assumptions and Limitations

This standard is intended for use with squared-end Florida-I and AASHTO Type II Beams with or without end diaphragms.

This standard contains generic details and notes for beveled and embedded bearing plates for prestressed concrete Florida-I and AASHTO Type II Beams with or without skewed support conditions.

Use this standard with Indexes 20010, 20036, 20045, 20054, 20063, 20072, 20078, 20084, 20096, 20120 and 20510.

Embedded Bearing Plates A are required for all Florida-I Beams (FIBs). Embedded Bearing Plates A and Beveled Bearing Plates B are required for beams on grades greater than 2%.

Plan Content Requirements

In the Structures Plans:

Bearing seats (pedestals) may be finished level for beam grades less than 0.5%. Use Embedded Bearing Plates A but do not use Beveled Bearing Plates B.

For beam grades between 0.5% and 2%, show the bearing seats (pedestals) to be finished parallel to the beam grade with no allowance for beam camber or deflection when less than the limits specified in ***SDG*** 6.5.1. Use Embedded Bearing Plates A for FIBs but do not use Beveled Bearing Plates B.

For beam grades greater than 2%, show the bearing seats (pedestals) to be finished level and use Bearing Plates A and B. Refer to ***SDG*** 6.5.1 for consideration of beam camber and deflection effects.

Also see instructions for Index 20510.

Complete the following "BEARING PLATE DATA TABLE" and include it in the plans. Fill in the table to correspond with data on the appropriate "TABLE OF BEAM VARIABLES" using inch units for Beveled Plate dimensions 'X' and 'Y' rounded to 1/16th of an inch. If Beveled Bearing Plates B are not required, fill in the corresponding columns with "N/A". See Introduction I.3 for more information regarding use of Data Tables.

Use the following equations to determine the Beveled Bearing Plate B thicknesses for "PLAN VIEW CASES"' and "END ELEVATION CONDITIONS"' corresponding to those shown on Index 20010 or 20120. The Slope parameter in these equations requires decimal units and correct sign convention:

END 1	END 2
(I) PLAN VIEW CASE 1:	
(a) END ELEVATION CONDITION 1 or 2 (Positive Slope)	
X = 0.5" + (C) x Slope	X = 0.5"
Y = 0.5"	Y = 0.5" + (C) x Slope
(b) END ELEVATION CONDITION 1 or 3 (Negative Slope)	
X = 0.5"	X = 0.5" - (C) x Slope
Y = 0.5" - (C) x Slope	Y = 0.5"

BEARING PLATE DATA TABLE - TYPE 2 — Table Date 7-01-13

GENERAL BEARING PLATE DATA							BEVELED PLATE REQUIRED (Yes/No)	BEVELED PLATE DIMENSIONS (PLATE B) (inches)		
BRG. PLATE MARK **	SPAN NO(s).	BEAM NO(s).	PAD TYPE	BEAM END	PLAN VIEW CASE	SLOPE (%) *		C	X	Y

NOTES:
See Index No. 20512 for additional notes and details.
Embedded Bearing Plate A dimensions are ½" x 1'-1½" x 3'-0" for Florida-I Beams or ½" x 1'-1½" x 1'-4" for AASHTO Type II Beams.
* Slope measured along ℄ of Beam at ℄ of Bearing.
** See "TABLE OF BEAM VARIABLES" and Index No. 20010 for Florida-I Beams or Index No. 20120 for AASHTO Type II Beams.

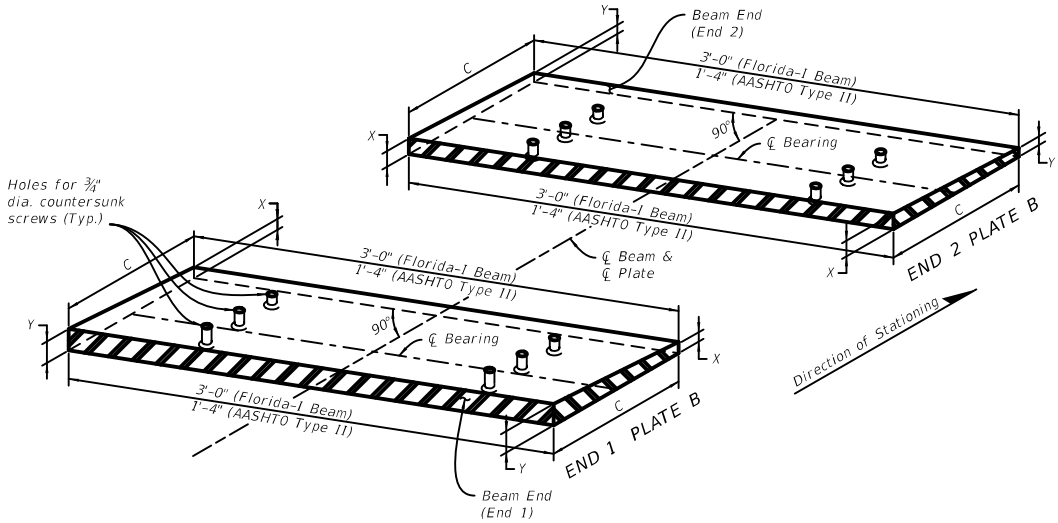

ISOMETRIC VIEW OF BEVELED BEARING PLATES (TYPE 2) FOR FLORIDA I-BEAMS
(AASHTO TYPE II BEAMS SIMILAR)

Payment

The cost of beveled and embedded bearing plates is incidental to the cost of the prestressed beams they are used with. No separate payment is made.

Example

A design calls for FIBs with Type F Bearing Pads. The Grade along the PGL and centerline of the beam is negative 2.5% and slope due to camber and deflection is less than 0.0125 radians. The span has no skew.

Because the slope is greater than the absolute value of 2%, beveled bearing plates are required. From Index 20510 a Type F Bearing Pad is 10" x 2'-8", and the Beveled Bearing Plate (Plate B) has dimensions C=1'-0" and D=3'-0". The bridge has a 0 degree skew (Φ=90°); by Index 20010, use Case 1, Condition 3.

End 1	End 2
W=0.5"	W=0.5"-(12)*(-0.025)) = 0.8"
Y = 0.5"-(12)*(-0.025)) = 0.8 "	Y=0.5"

Complete the Table with location information and the following from the example:

BEARING PLATE DATA TABLE - TYPE 2 — Table Date 7-01-13

GENERAL BEARING PLATE DATA							BEVELED PLATE REQUIRED (Yes/No)	BEVELED PLATE DIMENSIONS (PLATE B) (inches)		
BRG. PLATE MARK **	SPAN NO(s).	BEAM NO(s).	PAD TYPE	BEAM END	PLAN VIEW CASE	SLOPE (%) *		C	X	Y
			F	1	1	-2.5	Yes	12	½	13/16
			F	2	1	-2.5	Yes	12	½	13/16

NOTES:
See Index No. 20512 for additional notes and details.
Embedded Bearing Plate A dimensions are ½" x 1'-1½" x 3'-0" for Florida-I Beams or ½" x 1'-1½" x 1'-4" for AASHTO Type II Beams.
* Slope measured along ℄ of Beam at ℄ of Bearing.
** See "TABLE OF BEAM VARIABLES" and Index No. 20010 for Florida-I Beams or Index No. 20120 for AASHTO Type II Beams.

Index 20600 Series Concrete Piles (Rev. 11/16)

Design Criteria

AASHTO LRFD Bridge Design Specifications; ***Structures Design Guidelines (SDG)***; ***Structures Detailing Manual (SDM)***

Design Assumptions and Limitations

Index 20600 is the lead standard for the Square Prestressed Concrete Pile standard series which includes Indexes 20600 through 20631. Use this standard with Indexes 20601, 20602, 20612, 20614, 20618, 20620, 20624, 20630 and 20631.

Standard piles are designed to have 1000 psi uniform compression after prestress losses without any applied loads to offset tensile stresses that occur during typical driving.

The piles are designed to have 0.0 psi tension using a load factor of 1.5 times the pile self weight during pick-up, storage and transportation as shown in the "Table of Maximum Pile Pick-Up and Support Lengths" on the standard.

Plan Content Requirements

In the Structures Plans:

Show and label the piles on the Foundation Layout, End Bent, Intermediate Bent, Pier, Footing, Typical Section and other sheets as required.

Complete the following "Data Table" in accordance with ***SDG*** 3.5 and ***SDM*** 11.4 and include it in the contract plans with the "Foundation Layout" sheets. Modify table and notes as required to accommodate the required number of piles, piers and/or bents, use of Test Piles and instrumentation. When not enough space is available on one plan sheet, continuations of the Data Table and/or separate pile cut-off elevation tables are acceptable. See Introduction I.3 for more information regarding use of Data Tables.

For projects without Test Piles change data table column heading "TEST PILE LENGTH (ft.)" to "PILE ORDER LENGTH (ft.)".

PILE DATA TABLE																						Table Date 01/01/16
INSTALLATION CRITERIA								DESIGN CRITERIA								PILE CUT-OFF ELEVATIONS						
PIER or BENT NUMBER	PILE SIZE (in.)	NOMINAL BEARING RESISTANCE (tons)	NOMINAL UPLIFT RESISTANCE (tons)	MINIMUM TIP ELEVATION (ft.)	TEST PILE LENGTH (ft.)	REQUIRED JET ELEVATION (ft.)	REQUIRED PREFORM ELEVATION (ft.)	FACTORED DESIGN LOAD (tons)	FACTORED DESIGN UPLIFT LOAD (tons)	DOWN DRAG (tons)	TOTAL SCOUR RESISTANCE (tons)	NET SCOUR RESISTANCE (tons)	100-YEAR SCOUR ELEVATION (ft.)	Ø COMPRESSION	Ø UPLIFT	PILE 1	PILE 2	PILE 3	PILE 4	PILE 5	PILE 6	PILE 7

$$\frac{\text{Factored Design Load} + \text{Net Scour Resistance} + \text{Down Drag}}{\text{Ø}} \leq \text{Nominal Bearing Resistance}$$

UPLIFT RESISTANCE – The ultimate side friction capacity that must be obtained below the 100 year scour elevation to resist pullout of the pile (Specify only when design requires uplift capacity).

TOTAL SCOUR RESISTANCE – An estimate of the ultimate static side friction resistance provided by the scourable soil.

NET SCOUR RESISTANCE – An estimate of the ultimate static side friction resistance provided by the soil from the required preformed or jetting elevation to the scour elevation.

100-YEAR SCOUR ELEVATION – Estimated elevation of scour due to the 100 year storm event.

PILE INSTALLATION NOTES [Notes Date 7-01-13]:

Contractor to verify location of all utilities prior to any pile installation activities.

Minimum Tip Elevation is required for lateral stability.

When a required jetting elevation is shown, the jet shall be lowered to the elevation and continue to operate at this elevation until the pile driving is completed. If jetting or preforming elevations differ from those shown on the table, the Engineer shall be responsible for determination of the required driving resistance.

No jetting will be allowed without the approval of the Engineer.

The Contractor should not anticipate being allowed to jet piles below the 100-year scour elevation or required jet elevation, whichever is deeper.

At each Bent, pile driving is to commence at the center of the Bent and proceed outward.

Payment

Item number	Item description	Unit Measure
455-34-ABB	Prestressed Concrete Piling	LF

Design Aids

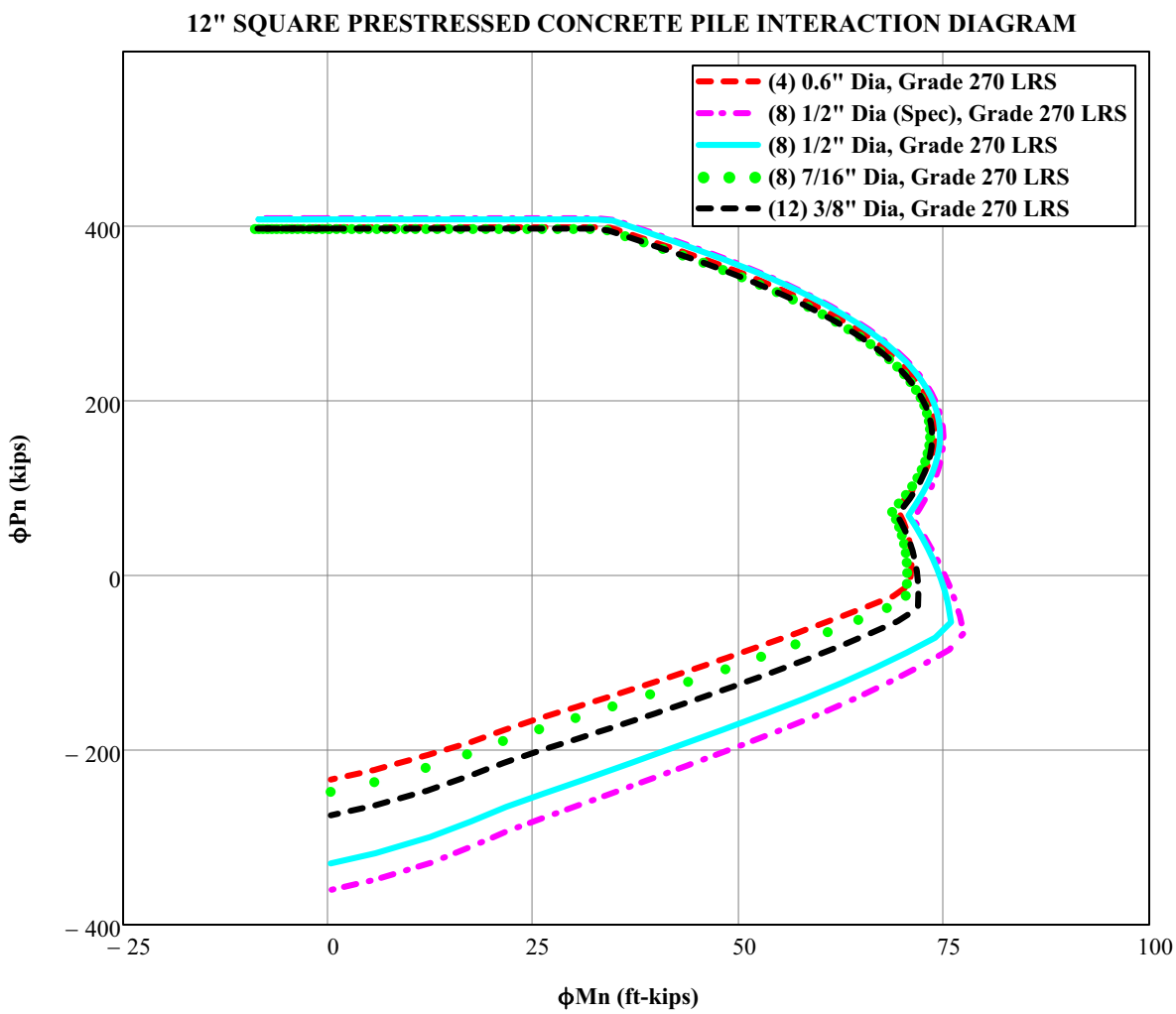

Design Assumptions:

- Concrete compressive strength $f'_c = 6$ ksi.
- Modulus of elasticity of prestressing strands, $E_p = 28{,}500$ ksi.
- Resistance factor ϕ based on AASHTO LRFD 5.5.4.2.1 (0.75 compression controlled, 1.0 tension controlled).
- All piles assumed to have spiral ties.
- Strand sizes and strand patterns used to create interaction curves correspond with those indicated in Index 20612.

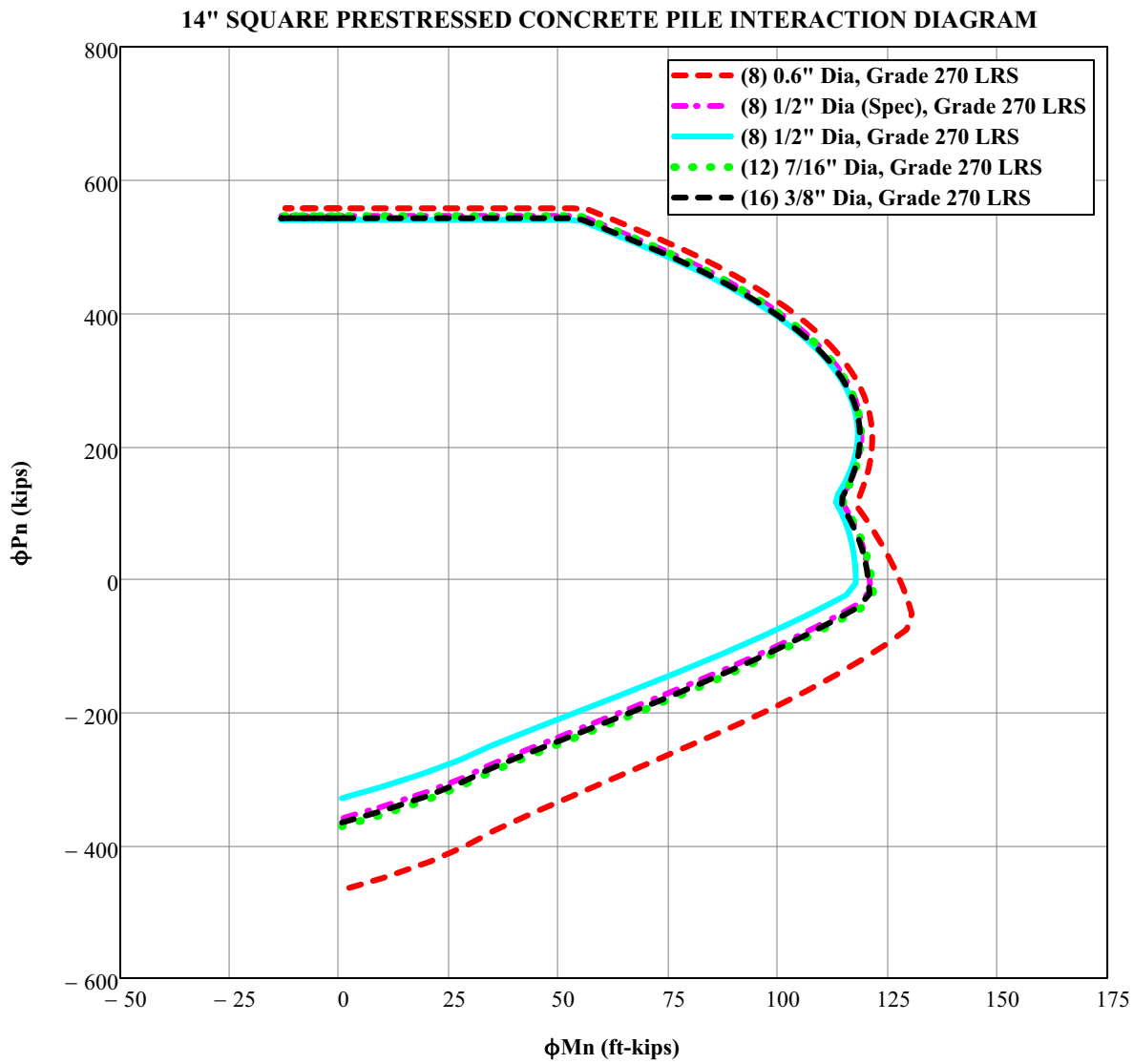

Design Assumptions:

- Concrete compressive strength $f'_c = 6$ ksi.
- Modulus of elasticity of prestressing strands, $E_p = 28{,}500$ ksi.
- Resistance factor ϕ based on AASHTO LRFD 5.5.4.2.1
  (0.75 compression controlled, 1.0 tension controlled)
- All piles assumed to have spiral ties.
- Strand sizes and strand patterns used to create interaction curves correspond with those indicated in Index 20614.

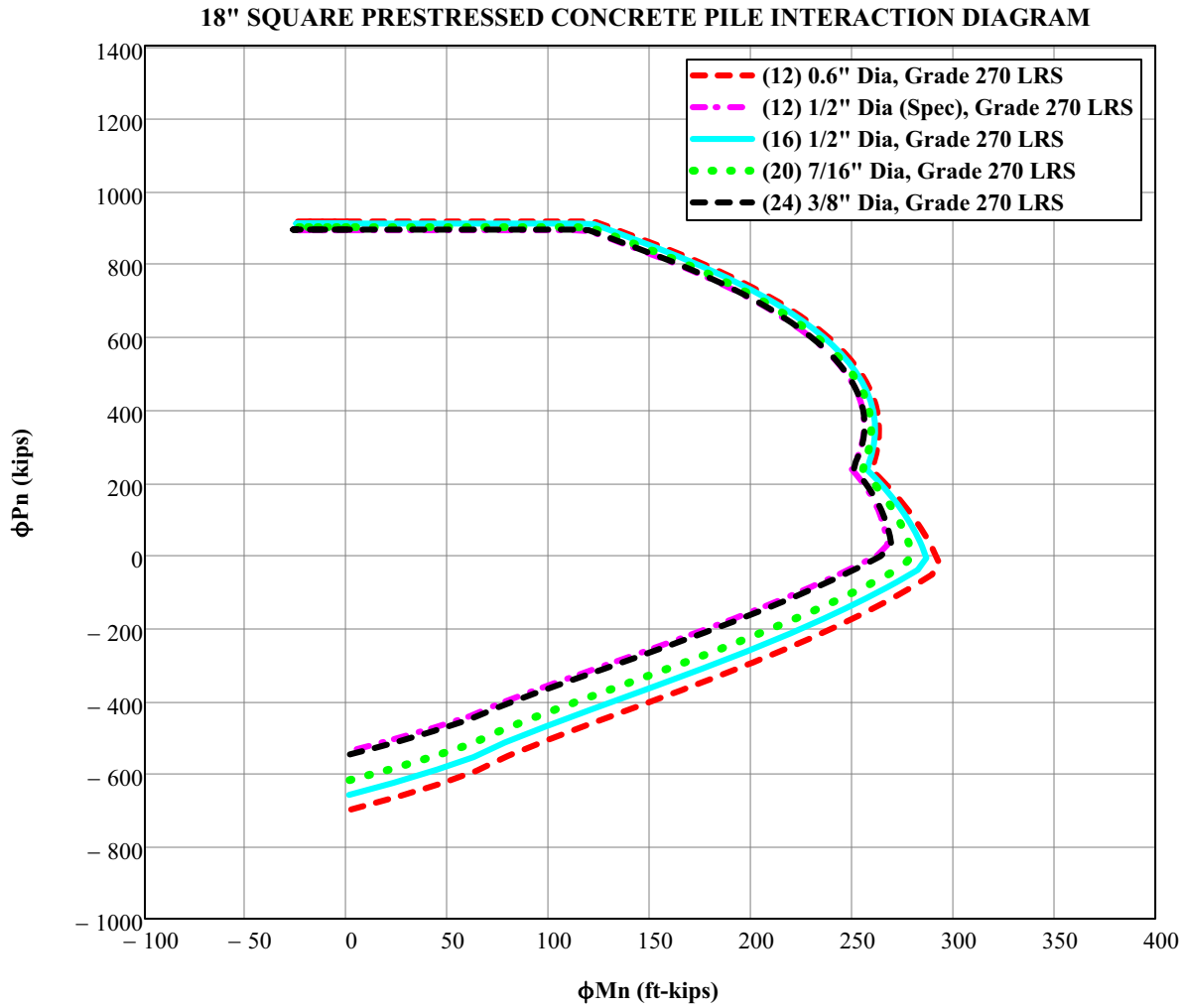

Design Assumptions:

- Concrete compressive strength $f'_c = 6$ ksi.
- Modulus of elasticity of prestressing strands, $E_p = 28{,}500$ ksi.
- Resistance factor ϕ based on AASHTO LRFD 5.5.4.2.1 (0.75 compression controlled, 1.0 tension controlled)
- All piles assumed to have spiral ties.
- Strand sizes and strand patterns used to create interaction curves correspond with those indicated in Index 20618.

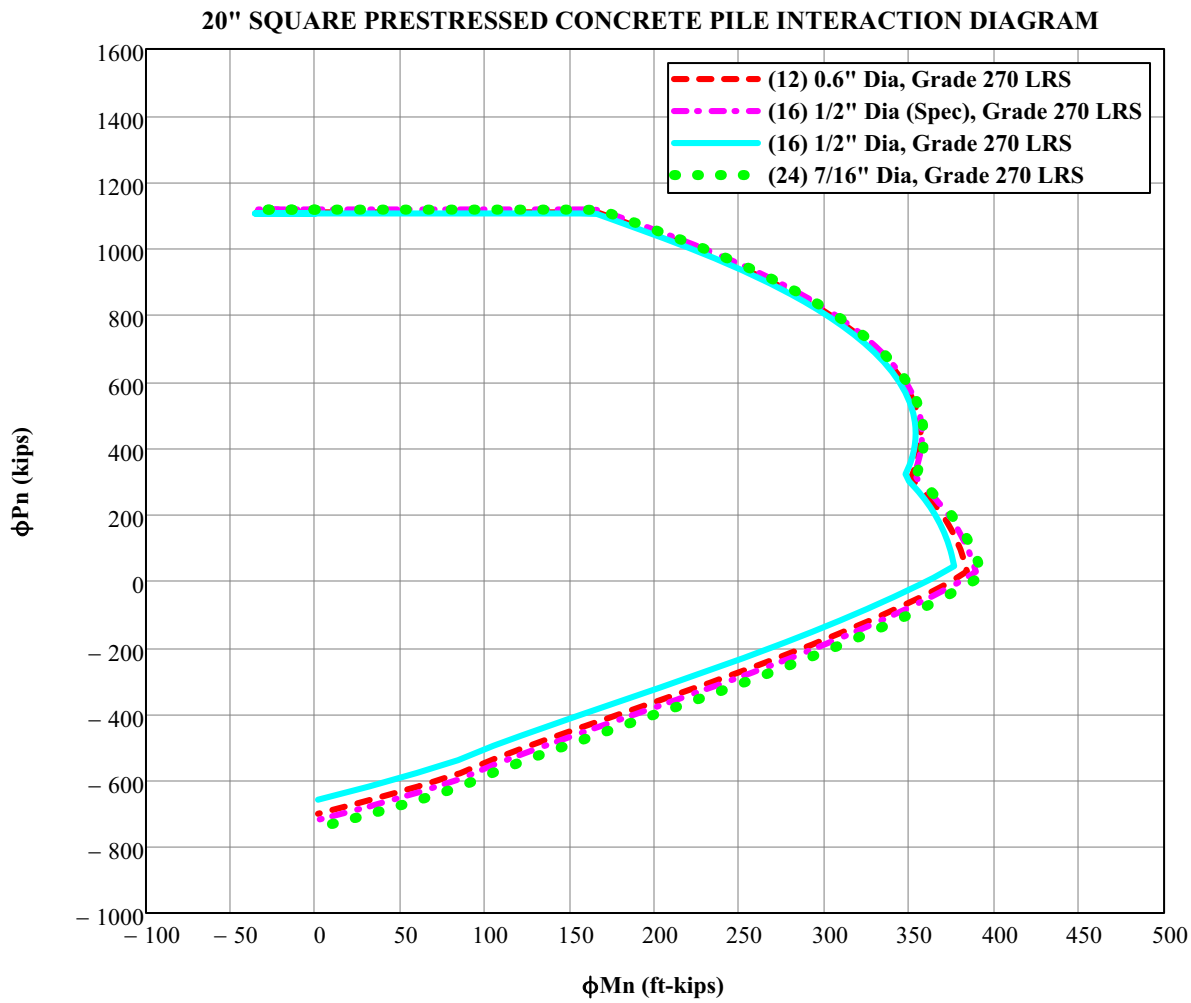

Design Assumptions:

- Concrete compressive strength $f'_c = 6$ ksi.
- Modulus of elasticity of prestressing strands, $E_p = 28{,}500$ ksi.
- Resistance factor ϕ based on AASHTO LRFD 5.5.4.2.1 (0.75 compression controlled, 1.0 tension controlled)
- All piles assumed to have spiral ties.
- Strand sizes and strand patterns used to create interaction curves correspond with those indicated in Index 20620.

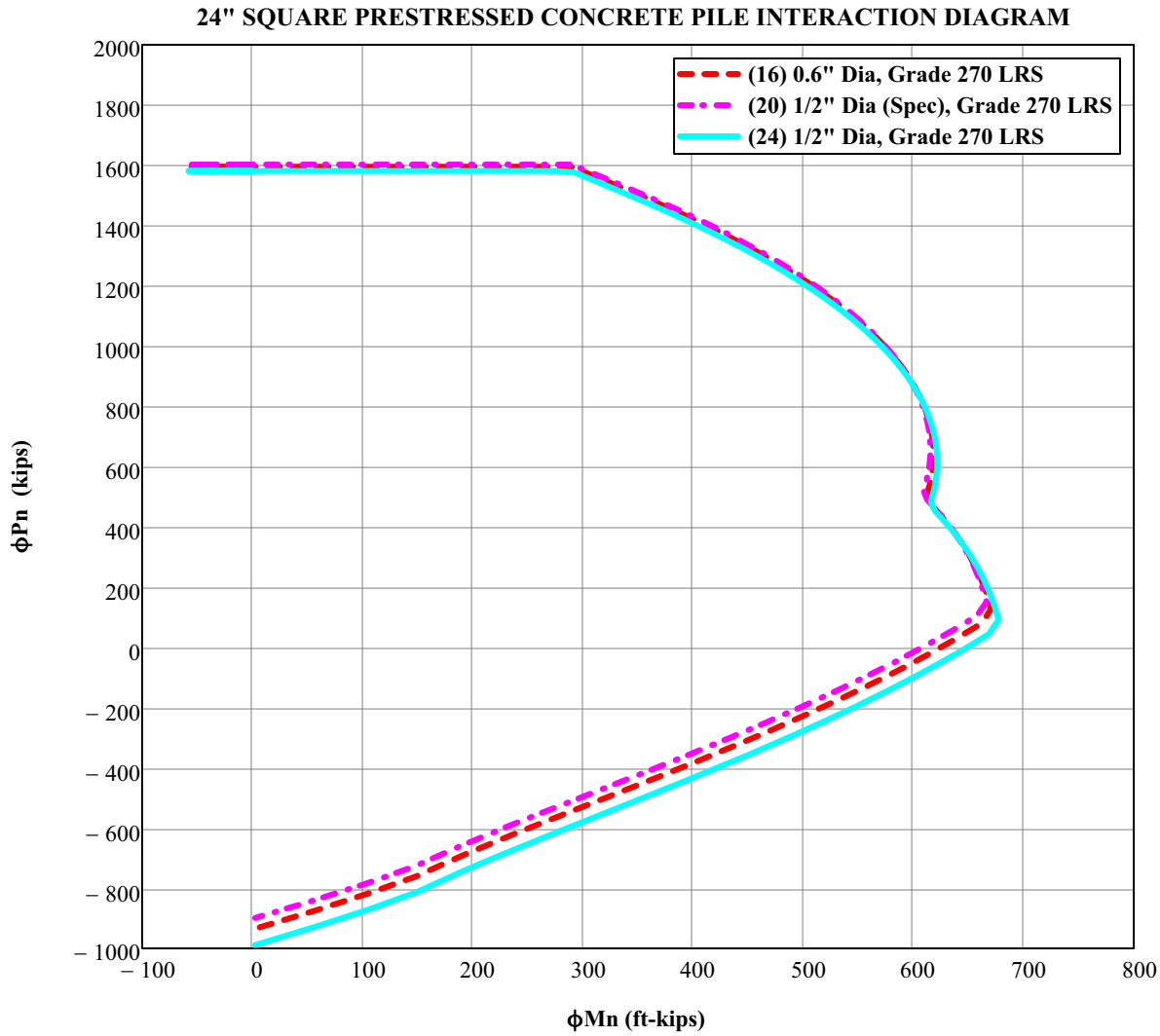

Design Assumptions:

- Concrete compressive strength $f'_c = 6$ ksi.
- Modulus of elasticity of prestressing strands, $E_p = 28{,}500$ ksi.
- Resistance factor ϕ based on AASHTO LRFD 5.5.4.2.1 (0.75 compression controlled, 1.0 tension controlled)
- All piles assumed to have spiral ties.
- Strand sizes and strand patterns used to create interaction curves correspond with those indicated in Index 20624.

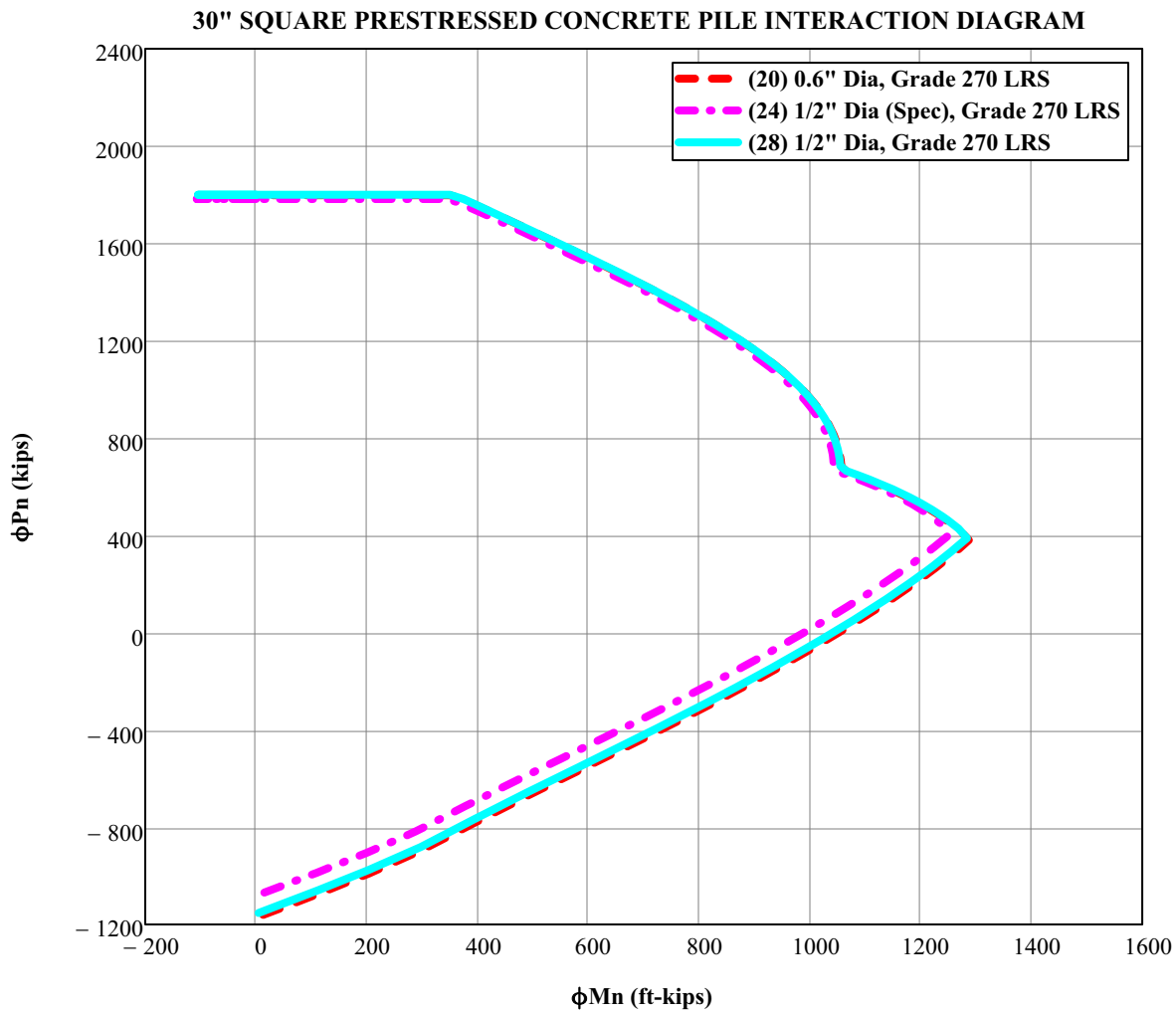

Design Assumptions:

- Concrete compressive strength $f'_c = 6$ ksi.
- Modulus of elasticity of prestressing strands, $E_p = 28{,}500$ ksi.
- Resistance factor ϕ based on AASHTO LRFD 5.5.4.2.1 (0.75 compression controlled, 1.0 tension controlled)
- All piles assumed to have spiral ties.
- Strand sizes and strand patterns used to create interaction curves correspond with those indicated in Index 20630.

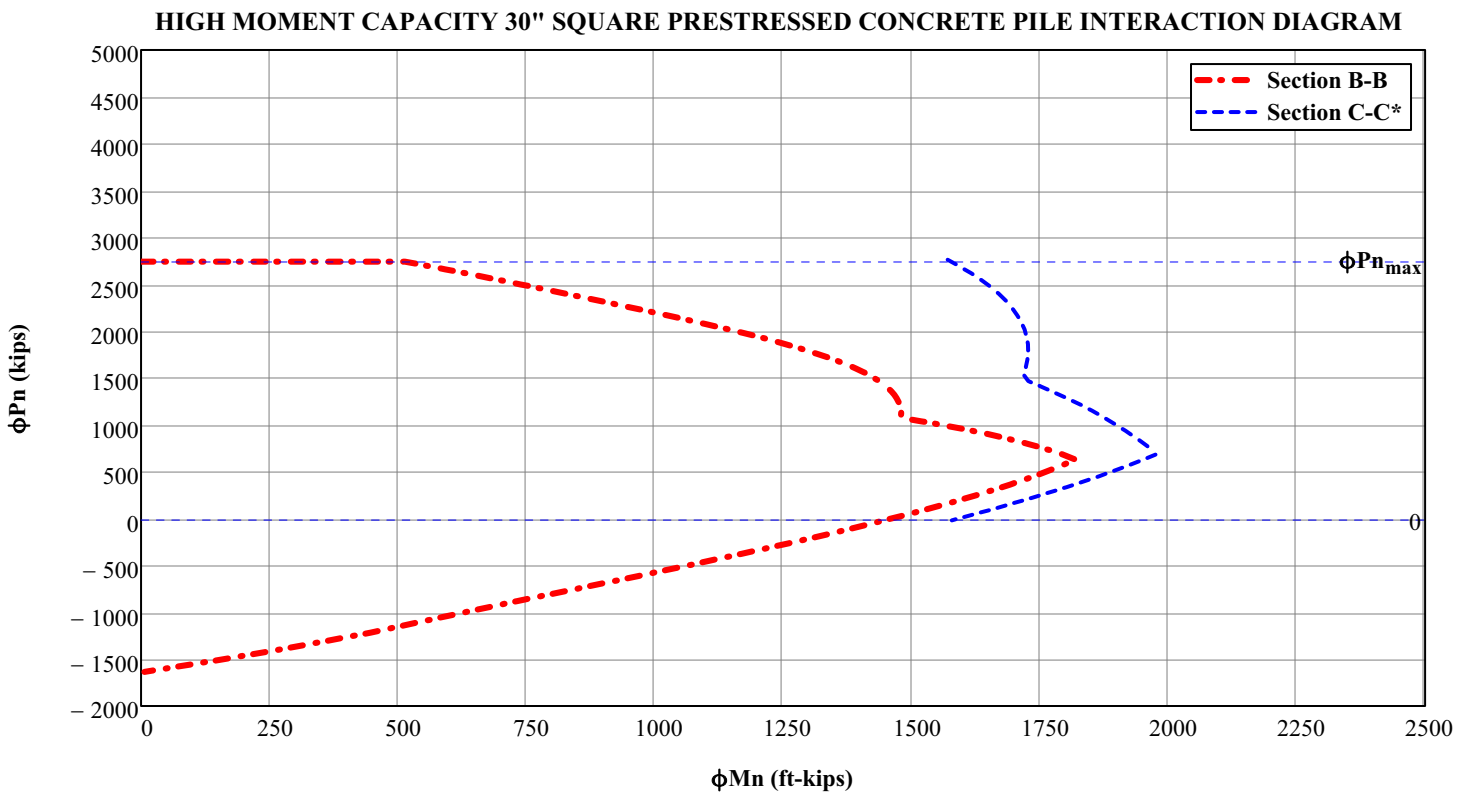

Design Assumptions:

- Concrete compressive strength $f'_c = 8.5$ ksi.
- Strand Pattern: (28) 0.6" Diameter, Grade 270 LRS.
- Modulus of elasticity of prestressing strands, $E_p = 28{,}500$ ksi.
- Resistance factor ϕ based on AASHTO LRFD 5.5.4.2.1 (0.75 compression controlled, 1.0 tension controlled)
- All piles assumed to have spiral ties.
- Refer to Design Standard Index 20631 for details of pile sections B-B and C-C.

*The curve for Section C-C is limited by the axial capacity (tension and compression) of the voided section of the pile (Section B-B).

Index 20654 54" Precast / Post-Tensioned Concrete Cylinder Pile (Rev. 11/16)

Design Criteria

AASHTO LRFD Bridge Design Specifications, 6th Edition; ***Structures Design Guidelines (SDG)***; ***Structures Detailing Manual (SDM)***

Design Assumptions and Limitations

Standard piles are designed to have 1000 psi uniform compression after prestress losses without any applied loads.

The piles are designed to have 0.0 psi tension using a load factor of 1.5 times the pile self weight during pick-up, storage and transportation as shown in the "Table of Maximum Pile Pick-Up and Support Lengths" on the standard.

Plan Content Requirements

In the Structures Plans:

Show and label the piles on the Foundation Layout, End Bent, Intermediate Bent, Pier, Footing, Typical Section and other sheets as required.

Complete the following "Data Table" in accordance with ***SDG*** 3.5 and ***SDM*** 11.4 and include it in the contract plans with the "Foundation Layout" sheets. Modify table and notes as required to accommodate the required number of piles, piers and/or bents and use of Test Piles. When not enough space is available on one plan sheet, continuations of the Data Table and/or separate pile cut-off elevation tables are acceptable. See Introduction I.3 for more information regarding use of Data Tables.

For projects without Test Piles change column heading "TEST PILE LENGTH (ft.)" to "PILE ORDER LENGTH (ft.)".

PILE DATA TABLE																						Table Date 01/01/16
INSTALLATION CRITERIA								DESIGN CRITERIA								PILE CUT-OFF ELEVATIONS						
PIER or BENT NUMBER	PILE SIZE (in.)	NOMINAL BEARING RESISTANCE (tons)	NOMINAL UPLIFT RESISTANCE (tons)	MINIMUM TIP ELEVATION (ft.)	TEST PILE LENGTH (ft.)	REQUIRED JET ELEVATION (ft.)	REQUIRED PREFORM ELEVATION (ft.)	FACTORED DESIGN LOAD (tons)	FACTORED DESIGN UPLIFT LOAD (tons)	DOWN DRAG (tons)	TOTAL SCOUR RESISTANCE (tons)	NET SCOUR RESISTANCE (tons)	100-YEAR SCOUR ELEVATION (ft.)	Ø COMPRESSION	Ø UPLIFT	PILE 1	PILE 2	PILE 3	PILE 4	PILE 5	PILE 6	PILE 7

$$\frac{\text{Factored Design Load} + \text{Net Scour Resistance} + \text{Down Drag}}{\text{Ø}} \leq \text{Nominal Bearing Resistance}$$

UPLIFT RESISTANCE – The ultimate side friction capacity that must be obtained below the 100 year scour elevation to resist pullout of the pile (Specify only when design requires uplift capacity).

TOTAL SCOUR RESISTANCE – An estimate of the ultimate static side friction resistance provided by the scourable soil.

NET SCOUR RESISTANCE – An estimate of the ultimate static side friction resistance provided by the soil from the required preformed or jetting elevation to the scour elevation.

100-YEAR SCOUR ELEVATION – Estimated elevation of scour due to the 100 year storm event.

PILE INSTALLATION NOTES [Notes Date 7-01-13]:

Contractor to verify location of all utilities prior to any pile installation activities.

Minimum Tip Elevation is required for lateral stability.

When a required jetting elevation is shown, the jet shall be lowered to the elevation and continue to operate at this elevation until the pile driving is completed. If jetting or preforming elevations differ from those shown on the table, the Engineer shall be responsible for determination of the required driving resistance.

No jetting will be allowed without the approval of the Engineer.

The Contractor should not anticipate being allowed to jet piles below the 100-year scour elevation or required jet elevation, whichever is deeper.

At each Bent, pile driving is to commence at the center of the Bent and proceed outward.

Payment

Item number	Item description	Unit Measure
455-36-AB	Concrete Cylinder Piles Furnished & Driven (54" Diameter)	LF

Index 20660 60" Prestressed Concrete Cylinder Pile (Rev. 11/16)

Design Criteria

AASHTO LRFD Bridge Design Specifications, 6th Edition; ***Structures Design Guidelines (SDG)***; ***Structures Detailing Manual (SDM)***

Design Assumptions and Limitations

Standard piles are designed to have 1000 psi uniform compression after prestress losses without any applied loads.

The piles are designed to have 0.0 psi tension using a load factor of 1.5 times the pile self weight during pick-up, storage and transportation as shown in the "Table of Maximum Pile Pick-Up and Support Lengths" on the standard.

Plan Content Requirements

In the Structures Plans:

Show and label the piles on the Foundation Layout, End Bent, Intermediate Bent, Pier, Footing, Typical Section and other sheets as required.

Complete the following "Data Table" in accordance with ***SDG*** 3.5 and ***SDM*** 11.4 and include it in the contract plans with the "Foundation Layout" sheets. Modify table and notes as required to accommodate the required number of piles, piers and/or bents and use of Test Piles. When not enough space is available on one plan sheet, continuations of the Data Table and/or separate pile cut-off elevation tables are acceptable. See Introduction I.3 for more information regarding use of Data Tables.

For projects without Test Piles change column heading "TEST PILE LENGTH (ft.)" to "PILE ORDER LENGTH (ft.)".

PILE DATA TABLE																						Table Date 01/01/16
INSTALLATION CRITERIA								DESIGN CRITERIA								PILE CUT-OFF ELEVATIONS						
PIER or BENT NUMBER	PILE SIZE (in.)	NOMINAL BEARING RESISTANCE (tons)	NOMINAL UPLIFT RESISTANCE (tons)	MINIMUM TIP ELEVATION (ft.)	TEST PILE LENGTH (ft.)	REQUIRED JET ELEVATION (ft.)	REQUIRED PREFORM ELEVATION (ft.)	FACTORED DESIGN LOAD (tons)	FACTORED DESIGN UPLIFT LOAD (tons)	DOWN DRAG (tons)	TOTAL SCOUR RESISTANCE (tons)	NET SCOUR RESISTANCE (tons)	100-YEAR SCOUR ELEVATION (ft.)	Ø COMPRESSION	Ø UPLIFT	PILE 1	PILE 2	PILE 3	PILE 4	PILE 5	PILE 6	PILE 7

$$\frac{\text{Factored Design Load} + \text{Net Scour Resistance} + \text{Down Drag}}{Ø} \leq \text{Nominal Bearing Resistance}$$

UPLIFT RESISTANCE – The ultimate side friction capacity that must be obtained below the 100 year scour elevation to resist pullout of the pile (Specify only when design requires uplift capacity).

TOTAL SCOUR RESISTANCE – An estimate of the ultimate static side friction resistance provided by the scourable soil.

NET SCOUR RESISTANCE – An estimate of the ultimate static side friction resistance provided by the soil from the required preformed or jetting elevation to the scour elevation.

100-YEAR SCOUR ELEVATION – Estimated elevation of scour due to the 100 year storm event.

PILE INSTALLATION NOTES [Notes Date 7-01-13]:

Contractor to verify location of all utilities prior to any pile installation activities.

Minimum Tip Elevation is required for lateral stability.

When a required jetting elevation is shown, the jet shall be lowered to the elevation and continue to operate at this elevation until the pile driving is completed. If jetting or preforming elevations differ from those shown on the table, the Engineer shall be responsible for determination of the required driving resistance.

No jetting will be allowed without the approval of the Engineer.

The Contractor should not anticipate being allowed to jet piles below the 100-year scour elevation or required jet elevation, whichever is deeper.

At each Bent, pile driving is to commence at the center of the Bent and proceed outward.

Payment

Item number	Item description	Unit Measure
455-36-AB	Concrete Cylinder Piles Furnished & Driven (60" Diameter)	LF

Index 20900 Approach Slabs (Flexible Pavement Approaches) (Rev. 11/16)

Design Criteria

AASHTO LRFD Bridge Design Specifications; ***Structures Detailing Manual (SDM)***

Design Assumptions and Limitations

Index 20900 is intended to be used with asphalt (flexible) roadway approach pavement.

Approach Slabs are intended to provide a smooth vertical transition between the roadway approach pavement and the bridge. They are supported at the bridge end by the end bent and by the embankment at the roadway approach end. This support configuration allows the Approach Slabs to rotate and settle as the roadway approach embankment settles. No additional supports (piles, footings, etc.) are required or allowed.

See ***SDG*** 3.1.H for distribution of design loads from the approach slab to the end bent.

The details of the approach slab adjacent to the end bent backwall as shown on the standard are intended for use with Poured Joint with Backer Rod and Strip Seal Expansion Joints. If other expansion joint types are used, e.g. finger or modular expansion joints, modifications to the standard may be required to accommodate the expansion joints and the blockouts used to install them.

Plan Content Requirements

Index 20900 requires supplemental sheets, a completed data table and reinforcing bar lists to be included in the Structures Plans. Some roadway elements may need to be carried onto the approach slab, and in these cases special attention must be given to clarifying in the plans which elements are to be included as part of the roadway.

In the Roadway Plans:

Include details and payment for the optional base under the approach slab. The minimum structural requirement under the approach slab is Optional Base Group 2. If the optional base group for the roadway approaches is Group 2 or better, the same base group may be continued under the approach slab.

The asphalt overlay should be continuous with the roadway asphalt pavement. Include the required pavement type along with the structural and friction course thicknesses.

Past recommendations for asphalt overlay thickness are as follows:

FC-5: final structural course of 1" and a friction course of 0.75"

FC 9.5: final structural course of 0.75" and a friction course of 1.0".

FC-12.5: overlay the approach slab with one layer of friction course 1.75" thick.

In the Structures Plans:

Include supplemental sheets showing as a minimum a Plan View with geometry and pertinent information not covered by this standard e.g., Survey Lines, PGL, Direction of Stationing, Phase Construction Joints, Raised Sidewalks and any other information necessary to accurately complete detailing of the Approach Slabs. Label Approach Slab by name or Index number. Match the skew angle of the bridge at both ends of the Approach Slab.

Urban roadway approaches usually have a 6-inch raised sidewalk. If the raised sidewalk is not continued across the bridge, when possible, transition the raised sidewalk to the bridge sidewalk over the length of the approach slab. Design and detail the transition to prohibit low spots or ponding and to redirect or collect runoff from the bridge and approach slab onto suitable roadway or into drainage structures.

When raised sidewalks are required on the approach slab, include the details for the sidewalks with the approach slab sheets. Concrete quantities for raised sidewalks on the approach slab shall be paid for as approach slab concrete.

Include Approach Slab Finish Grade Elevations with the Bridge Finish Grade Elevations. Show Finish Grade Elevations at the top of the asphalt overlay.

Include reinforcing bars in the Reinforcing Steel List. All reinforcing bars are straight bars (Types 1 and 2). Bars 5C are 5'-0" long.

Complete the following "Approach Slab Table of Dimensions" and include it on the supplemental sheets. See Introduction I.3 for more information regarding use of Data Tables.

APPROACH SLAB TABLE OF DIMENSIONS						Table Date 11-01-16
LOCATION	DIMENSIONS					ANGLE Ø
	L1	L2	M1	M2	N	

Dimension Notes:
Dimensions L1 & L2 are measured along gutter line, inside face of parapet or inside face of railing on raised sidewalks.
Dimensions L1 & L2 are arc dimensions within curved alignments.

Work this Data Table with Design Standards Index _____.

Payment

Item number	Item description	Unit Measure
400-2-10	Concrete Class II, Approach Slabs	CY
415-1-9	Reinforcing Steel - Approach Slabs	LB

The embankment and base required under the approach slabs shall be paid for using the standard roadway pay items and the quantities included in the roadway plans.

Index 20910 Approach Slabs (Rigid Pavement Approaches) (Rev. 11/16)

Design Criteria

AASHTO LRFD Bridge Design Specifications; ***Structures Detailing Manual (SDM)***

Design Assumptions and Limitations

Index 20910 is intended to be used with concrete (rigid) roadway approach pavement.

Approach Slabs are intended to provide a smooth vertical transition between the roadway approach pavement and the bridge. They are supported at the bridge end by the end bent and by the embankment at the roadway approach end. This support configuration allows the Approach Slabs to rotate and settle as the roadway approach embankment settles. No additional supports (piles, footings, etc.) are required or allowed.

Index 20910 works with Index 306 Bridge Approach Expansion Joint Concrete Pavement. The roadway approach end of the Approach Slab must be non-skewed to match up with Index 306.

See ***SDG*** 3.1.H for distribution of design loads from the approach slab to the end bent.

The details of the approach slab adjacent to the End Bent Backwall as shown on the standard are intended for use with Poured Joint with Backer Rod and Strip Seal Expansion Joints. If other expansion joint types are used, e.g. finger or modular expansion joints, modifications to the standard may be required to accommodate the expansion joints and the blockouts used to install them.

Plan Content Requirements

Index 20910 requires supplemental sheets, a completed data table and reinforcing bar lists to be included in the Structures Plans. Some roadway elements may need to be carried onto the approach slab, and in these cases special attention must be given to clarifying in the plans which elements are to be included as part of the roadway.

In the Roadway Plans:

Include details and payment for the optional base under the approach slab. The minimum structural requirement under the approach slab is Optional Base Group 2. If the optional base group for the roadway approaches is Group 2 or better, the same base group may be continued under the approach slab

In the Structures Plans:

Include supplemental sheets showing as a minimum a Plan View with geometry and pertinent information not covered by this standard e.g., Survey Lines, PGL, Direction of Stationing, Phase Construction Joints, Raised Sidewalks and any other information necessary to accurately complete detailing of the Approach Slabs. Label Approach Slab

by name or Index number. Match the skew angle of the bridge at the bridge end of the Approach Slab. The roadway approach end of the Approach Slab shall be non-skewed (perpendicular to the stationing line) to match up with the details shown on Index 306 Bridge Approach Expansion Joint Concrete Pavement.

Urban roadway approaches usually have a 6-inch raised sidewalk. If the raised sidewalk is not continued across the bridge, when possible, transition the raised sidewalk to the bridge sidewalk over the length of the approach slab. Design and detail the transition to prohibit low spots or ponding and to redirect or collect runoff from the bridge and approach slab onto suitable roadway or into drainage structures.

When raised sidewalks are required on the approach slab, include the details for the sidewalks with the approach slab sheets. Concrete quantities for raised sidewalks on the approach slab shall be paid for as approach slab concrete.

Include Approach Slab Finish Grade Elevations with the Bridge Finish Grade Elevations.

Include reinforcing bars in the Reinforcing Steel List. All reinforcing bars are straight bars (Types 1 and 2). Bars 5C1 are 5'-0" long.

Complete the following "Approach Slab Table of Dimensions" and include it on the supplemental sheets. See Introduction I.3 for more information regarding use of Data Tables.

APPROACH SLAB TABLE OF DIMENSIONS						Table Date 11-01-16
LOCATION	DIMENSIONS					ANGLE Ø
	L1	L2	M1	M2	N	

Dimension Notes:
Dimensions L1 & L2 are measured along gutter line, inside face of parapet or inside face of railing on raised sidewalks.
Dimensions L1 & L2 are arc dimensions within curved alignments.

Work this Data Table with Design Standards Index _____.

Payment.

Item number	Item description	Unit Measure
400-2-10	Concrete Class II, Approach Slabs	CY
400-9	Bridge Deck Grooving and Planing - Deck Thickness 8.5" or Greater	SY
415-1-9	Reinforcing Steel - Approach Slabs	LB

The embankment and base required under the approach slabs shall be paid for using the standard roadway pay items and the quantities included in the roadway plans.

Index 21100 Strip Seal Expansion Joint

Design Criteria

AASHTO LRFD Bridge Design Specifications; ***Structures Design Guidelines (SDG)***

Design Assumptions and Limitations

Use Index 21100 in accordance with the requirements of ***SDG*** 6.3 and 6.4.

Plan Content Requirements

Show Strip Seal Expansion Joints on Superstructure and Approach Slab detail sheets and other sheets as required. Label Expansion Joint by name or Index number. Show Sidewalk Cover Plates at all expansion joint locations that intersect with sidewalks.

Complete the "Strip Seal Expansion Joint Data Table Index No. 21100" using the instructions provided and include the table in the plans. See Introduction I.3 for more information regarding use of Data Tables.

Instructions:

1. Total Design Movement is the absolute value of the total factored temperature movement (expansion and contraction), measured in the direction of movement. Use Figures 1 through 4, for determining the Direction of Movement.
2. Include a value for Dimension A in the Data Table. Dimension A (measured perpendicular to the joint) @ 70°F is normally set at 2 inches to accommodate installation of the neoprene seal and a total design movement up to 3 inches. Set Dimension A to account for skews or greater design movements while meeting the design limitations below:
   a. the minimum factored joint opening in the Direction of Movement is ½ inch;
   b. the maximum factored joint opening in the Direction of Travel ("W" per ***SDG*** 6.4) is 4 inches;
3. Dimension A adjustments for 10°F shall be based on the unfactored movements perpendicular to the centerline of the joint.

STRIP SEAL EXPANSION JOINT DATA TABLE
INDEX NO. 21100

Table Date 01/01/12

LOCATION	TOTAL DESIGN MOVEMENT			MOVEMENT ANGLE α	SKEW ANGLE		DIM. A @ 70°F	DIM. A ADJUSTMENT PER 10°F
	IN DIRECTION OF MOVEMENT	PERPENDICULAR TO ℄ JOINT	PARALLEL TO ℄ JOINT		LEFT SIDE	RIGHT SIDE		

NOTE:
Dim. A adjustment per 10°F shown is measured perpendicular to ℄ Expansion Joint. For theoretical direction of movement, see Index No. 21100, Sheet 1.

Figure 1 Curved Bridge (Single Continuous Unit) with Skewed Joints

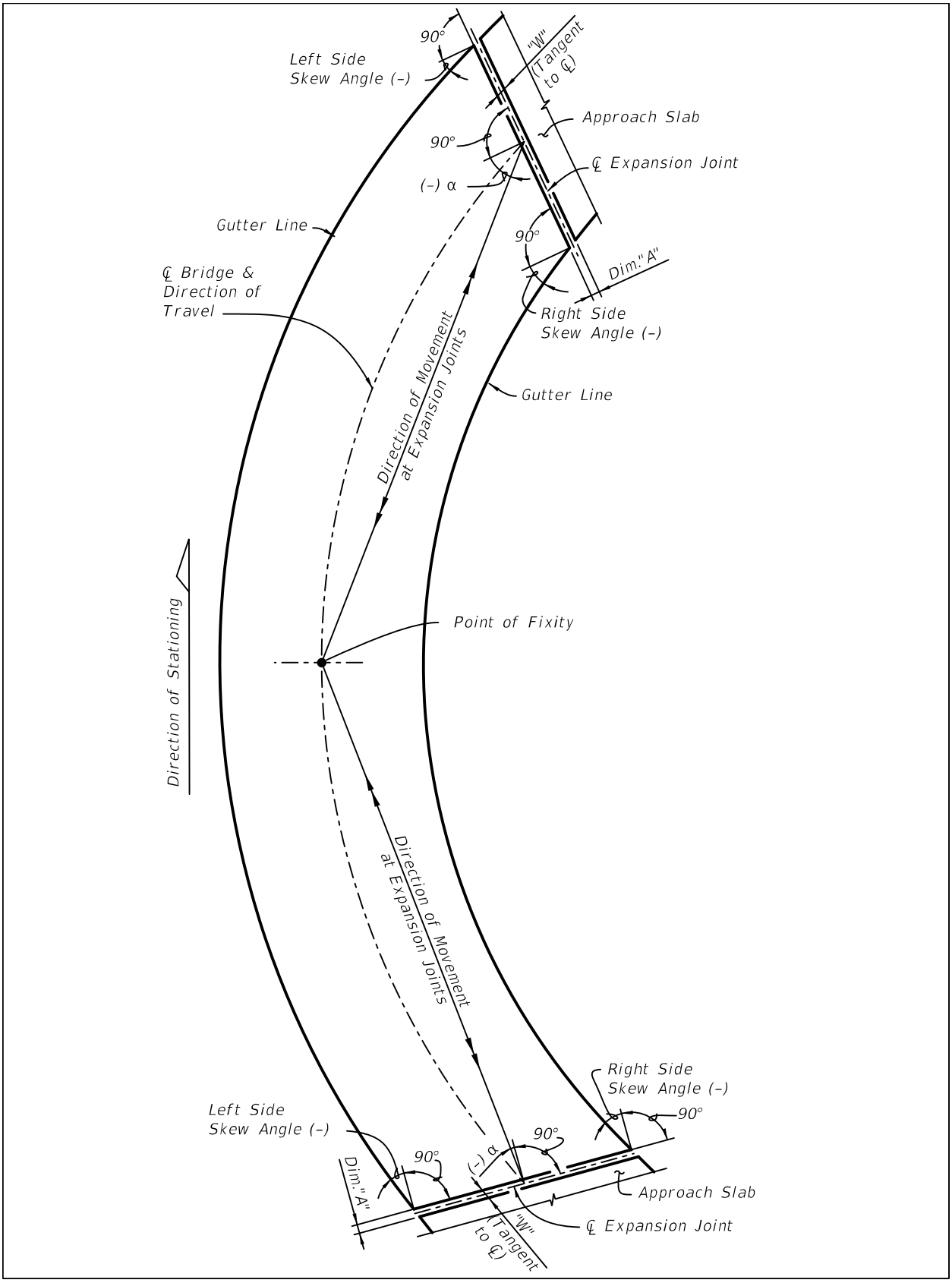

Figure 2 Curved Bridge (Single Continuous Unit) with Radial Joints

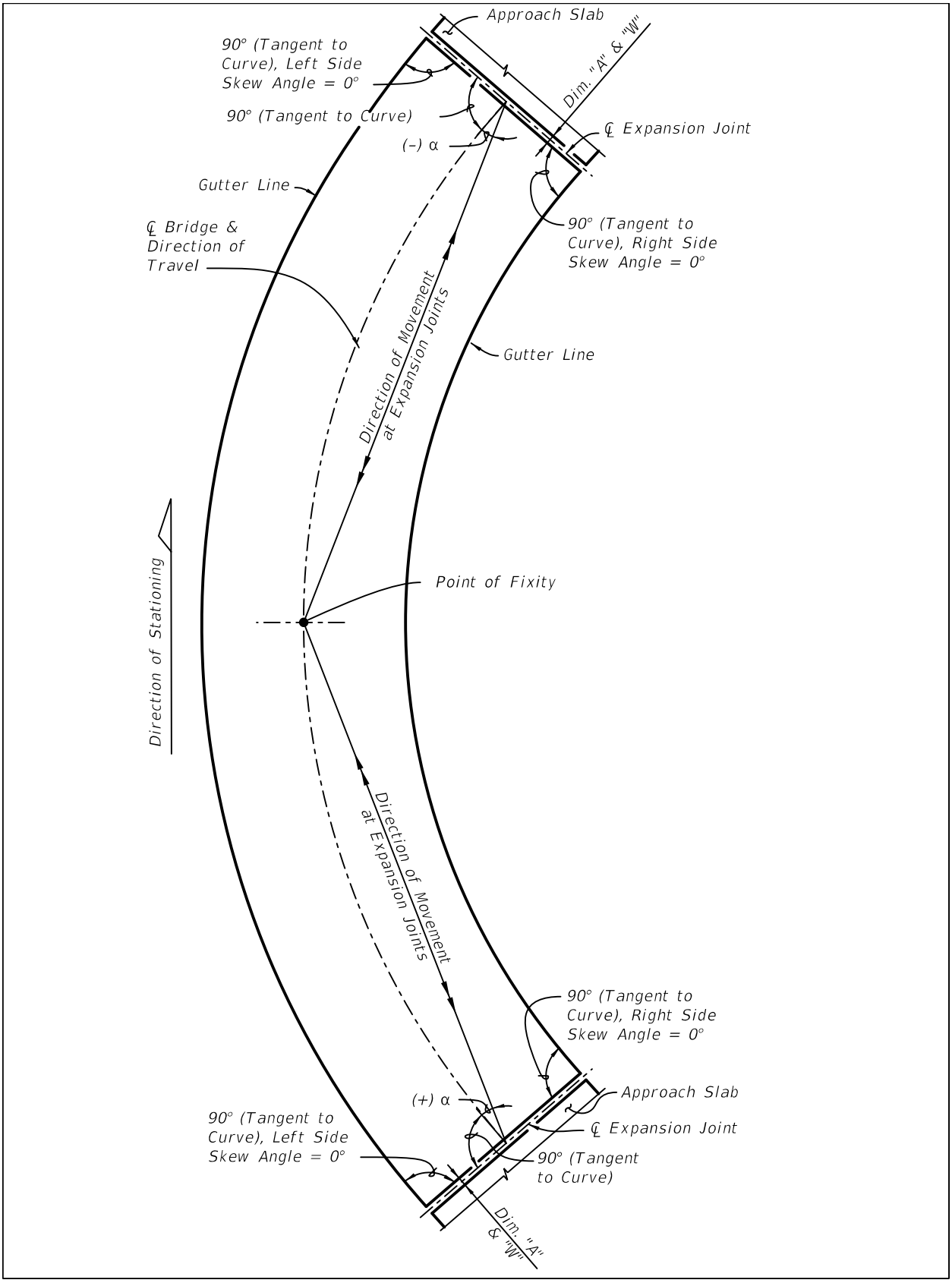

Figure 3 Curved Bridge (Multiple Continuous Units) with Radial Joints

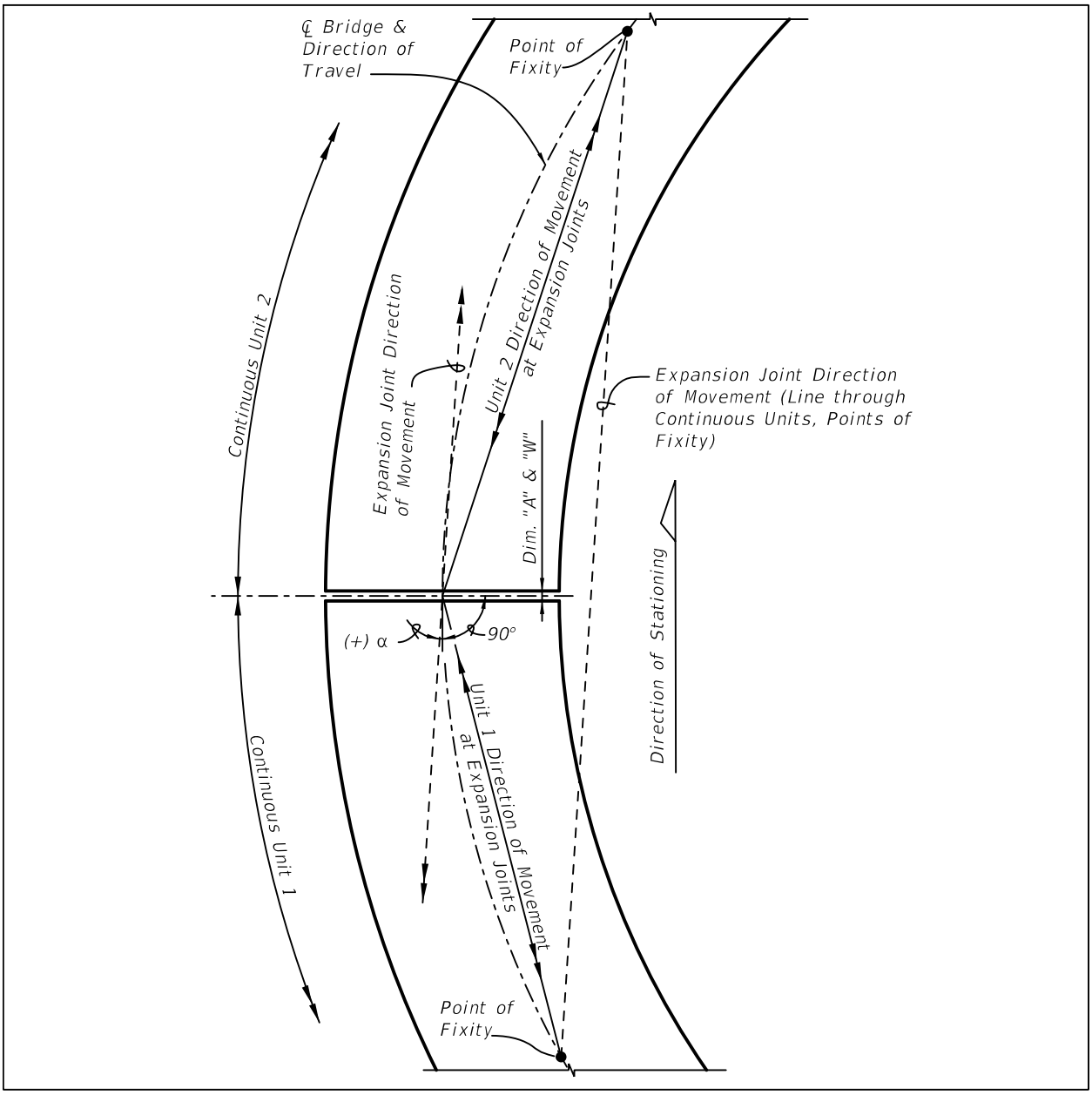

Figure 4 Straight Bridge with Skewed Joints

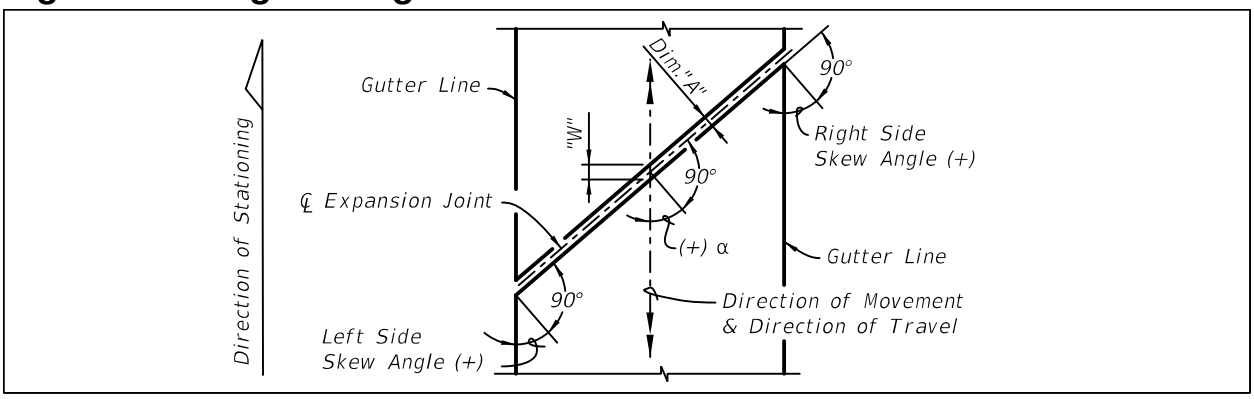

Payment.

Item number	Item description	Unit Measure
458-1-12	Bridge Deck Expansion Joint; New Construction - F&I; Strip Seal Joint System	LF

Index 21110 Poured Joint with Backer Rod Expansion Joint System

Design Criteria

AASHTO LRFD Bridge Design Specifications; ***Structures Design Guidelines (SDG)***

Design Assumptions and Limitations

Use Index 21110 in accordance with the requirements of ***SDG*** 6.3 and 6.4.

Plan Content Requirements

Show Poured Joint with Backer Rod Expansion Joints on Superstructure and Approach Slab detail sheets and other sheets as required. Label Expansion Joint by name or Index number. Show Sidewalk Cover Plates at all expansion joint locations that intersect with sidewalks.

Complete the "Poured Expansion Joint Data Table Index No. 21110" using the instructions provided and include the table in the plans. See Introduction I.3 for more information regarding use of Data Tables.

Instructions:

1. Total Design Movement is the absolute value of the total factored temperature movement (expansion and contraction), measured in the direction of movement. Note that creep and shrinkage may be neglected. See ***Instructions for Design Standards*** for Index 21100, Figures 1 through 4, for determining the Direction of Movement.
2. Include a value for Dimension A in the Data Table. Dimension A (measured perpendicular to the joint @ 70°F) is normally set at 2 inches for non-skewed joints. Set Dimension A to account for skews or smaller design movements while meeting the design limitations below:
   a. The design joint opening should be equal or greater than twice the factored joint contraction (including creep and shrinkage);
   b. The minimum factored joint opening in the direction of movement is ½ inch;
   c. The maximum factored joint opening in the direction of travel is 3 inches;
   d. The minimum joint opening recommended by manufacturers at the time of installation is 1 inch.
3. Dimension A adjustments for 10°F shall be based on the unfactored movements perpendicular to the centerline of the joint.

POURED EXPANSION JOINT DATA TABLE INDEX NO. 21110			Table Date 1-01-09
LOCATION	DIM. "A" @ 70°F	TOTAL DESIGN MOVEMENT	DIM. "A" ADJUSTMENT PER 10°F

NOTE:
Dim. "A" adjustment per 10°F shown is measured perpendicular to ℄ Expansion Joint. Work this table with Design Standards Index No. 21110.

Payment

Item number	Item description	Unit Measure
458-1-AB	Bridge Deck Expansion Joint	LF

Example

Given a bridge on a 45° skew, find Dimension A at 70° F.

Note: contraction and expansion are in the direction of movement and Dimension A is measured perpendicular to the joint opening. The maximum allowable opening in the direction of travel is 3 inches (See ***SDG*** Table 6.4-1).

The calculated movement is ±1 inch.

The minimum opening at 70° F in the direction of movement/travel is 2 * 1" = 2".

Two inches in the direction of movement = 1.4" (Say approximately 1.5" perpendicular to the joint).

Contraction/expansion perpendicular to the joint would be approximately 0.7" (Say 0.75" for simplicity).

Check if a Dim A of 1.5" meets the criteria.

Dim A ≥ 2 * contraction: 2 * 0.7 =1.4 < 1.5" OK

Maximum opening in the direction of travel is < 3":

Converting back from perpendicular to direction of movement: Opening = 2.12 inches at 70° F, therefore the maximum opening = 2.12" + 1" = 3.12".

3.12" is within a reasonable construction tolerance of 3", therefore OK.

Use Dim A = 1½".

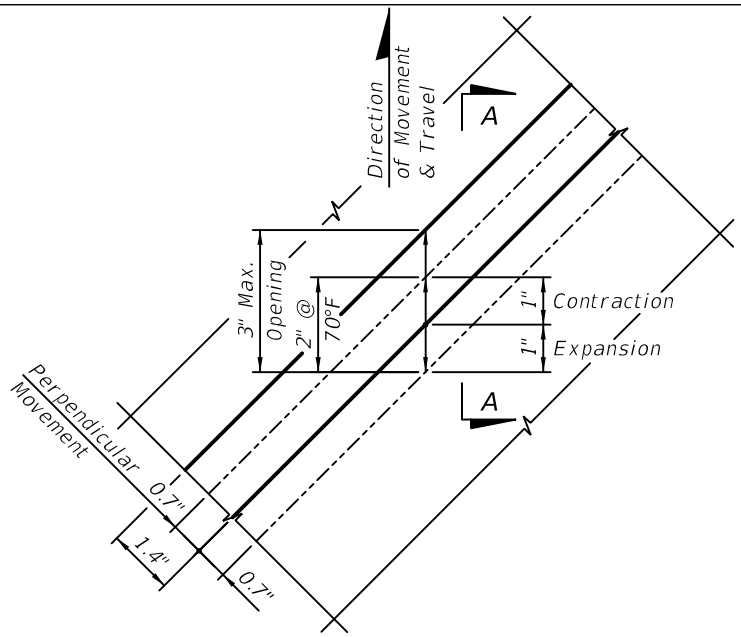

45° SKEWED JOINT

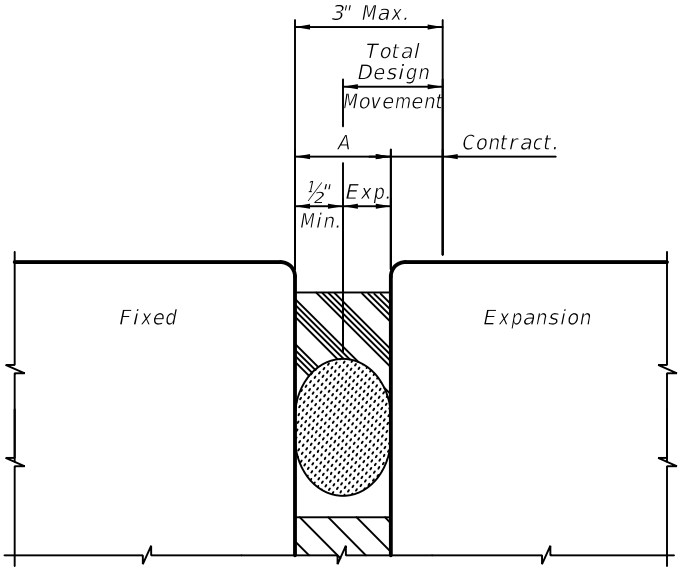

SECTION A-A THRU JOINT

Index 21200 Light Pole Pedestal (Rev. 11/16)

Design Criteria

AASHTO LRFD Bridge Design Specifications; ***Structures Design Guidelines (SDG)***

Design Assumptions and Limitations

Use this Index with Indexes 420, 422, 423, 425, 427, 428, 820, 821, 5210, and 5212 as appropriate.

Anchor Bolts were designed for Design Wind, Bridge Deck Height (above MLW), Luminaire Mounting Height, and Luminaire Arm Lengths of Standard (Index 17515), Light Poles.

Design of the additional bridge deck reinforcement is based on the minimum transverse top deck reinforcing required by the ***SDG***.

The pedestal and supporting deck are designed to accommodate Load Case 2; which is an Index 17515 Standard Light Pole with a 50 ft. mount height, 170 mph wind speed, located on a 75 ft. high bridge deck (above ground or MLW) with a 15 ft. arm. Load case 2 requires 4~1 ¼" diameter anchor bolts. Load Case 1 requires 4~1" diameter anchor bolts.

The working loads at the top of the pedestal for Load Case 2 are:

Axial Dead Load = 1.56 kip
Wind Load Moment about Transverse Axis = 40.6 kip-ft
Wind Load Moment about Longitudinal Axis = 28.3 kip-ft
Dead Load Moment about Longitudinal Axis = 1.69 kip-ft
Torsion about Pole Axis = 3.56 kip-ft
Maximum Shear = 1.38 kip

Locate pedestals near to substructure support to minimize vibration of the light poles due to traffic live loads. Locate the centerlines of pedestals a minimum 3'-10" away from centerlines of open joints in railings and ends of railings.

Commentary: Use of this Index with Index 424 (Corral Shape) Traffic Railings is not recommended because the Standard Corral Shape Railing cannot accommodate the required electrical conduit and embedded junction boxes (EJB's).

Plan Content Requirements

In the Structures Plans:

Show Light Pole Pedestals on Plan and Elevation, Superstructure and Approach Slab Supplemental Detail sheets. Use stations or longitudinal dimensions along bridge to define pedestal locations. Include anchor bolt diameters or load case number.

Payment

No separate payment is made for Light Pole Pedestals. See Payment Note on the ***Design Standard***.

Index 21210 Conduit Details (Rev. 11/16)

Design Criteria

NFPA National Electric Code; ***Structures Detailing Manual (SDM)***; ***AASHTO LRFD Bridge Design Specifications*** and ***NCHRP Report 350*** or ***AASHTO Manual for Assessing Safety Hardware (MASH)*** Test Level 4 Criteria

Design Assumptions and Limitations

This standard can be used for electrical service for highway or navigation lighting and ITS applications.

The details as shown for installing two 2" diameter conduits and associated Embedded Junction Boxes (EJBs) in traffic railings have been determined to be crashworthy in accordance with the requirements of ***NCHRP Report 350*** and the ***AASHTO LRFD Bridge Design Specifications*** for ***Design Standards*** Indexes 420, 421, 422, 423, 425, 5210 and 5211.

Plan Content Requirements

Coordinate with the District Utilities Engineer, ITS designer, highway lighting designer and/or navigation lighting designer as appropriate to determine the present and future uses for the conduit at the project location.

Provide supplemental designs, notes, details, wiring diagrams and wiring specifications in the plans as required to complement this Standard.

In the Structures and/or Retaining Wall Plans:

Designate each conduit and include supplemental plan details as shown in the following table:

Conduit Usage and Limits	Plan Requirements
Present use	Show supplemental project specific details and requirements to coordinate with conduit beyond bridge or retaining wall. Coordinate with the ITS, Lighting, etc. plans as required.
Future use with conduit limits consistent with limits shown on Design Standard	Designate conduit as "Future Use", no additional plan details required to show conduit limits.
Future use with conduit limits not consistent with limits shown on Design Standard	Show supplemental project specific details and requirements to coordinate with conduit beyond bridge or retaining wall. Coordinate with the ITS, Lighting, etc. plans as required.

For EJBs located within Traffic Railings, specify in the plans the type of EJBs required: EJB "A" - multiple raceways; EJB "B" - single raceways. Generally, multiple raceway EJBs can be used where services contained within individual raceways (conduits) can share a common Junction Box. Single raceway EJBs should be used where it is desirable or required that services contained within individual raceways (conduits) be isolated from each other.

Specify the type of fittings required at Expansion Joint locations on bridges: Expansion Fittings or Expansion / Deflection Fittings. Generally, Expansion Fittings can be used for bridges on tangent or large radius curved alignments where little or no transverse movement is expected at the Expansion Joints. Expansion / Deflection Fittings are typically required for bridges on curved alignments or combined curved and tangent alignments where transverse movement is expected at Expansion Joints.

For electrical service, specify the use of THWN or XHHW conductors.

Payment

Generally the cost of furnishing and installing Conduit, Junction Boxes, Expansion and Expansion / Deflection Fittings and all associated hardware required to complete the installation is included in the cost for the Traffic Railing or Pedestrian Railing (Parapet) that the conduit is installed in.

However, there may be special cases where other arrangements have been made.

Index 21220 Navigation Light System Details (Fixed Bridges) (Rev. 11/16)

Design Criteria

Structures Design Guidelines (SDG); Code of Federal Regulations Title 33, Chapter 1, Part 118; United States Coast Guard ***Bridge Lighting and Other Signals*** manual.

Design Assumptions and Limitations

If actual conditions differ from the typical configurations shown on the standard and/or it is a movable bridge, design a project specific Navigation Light System to comply with ***Code of Federal Regulations Title 33, Chapter 1, Part 118*** and United States Coast Guard ***Bridge Lighting and Other Signals*** manual.

Project specific designs are required for structures supporting Green Center Channel and Red Channel Margin Lights.

Provide design of RFL locations and configurations in Fender System drawings if applicable.

Provide design of CGL locations as shown in the Standard Drawing.

Include the height of Green Center Channel and Red Channel Margin Lights when establishing superstructure heights to comply with vertical clearance requirements.

Use this standard with Indexes 21210, and 21930, and/or project specific details as required.

Plan Content Requirements

In the Structures Plans:

Show fully detailed project specific designs of structures supporting Green Center Channel and Red Channel Margin Lights. Specify requirement for automatic lock positions for service and operating. Specify light and Service Chain mounting locations.

Show fully detailed project specific designs for Red Pier / Fender and Red Channel Margin Lights.

Prepare supplemental designs as required showing locations and details of conduit runs, power sources and other electrical components and incidental items.

Payment

Item number	Item description	Unit Measure
510-1	Navigation Lights - Fixed Bridge	LS

Index 21240 Maintenance Lighting For Box Girders

Design Criteria

NFPA National Electric Code; ***Structures Design Guidelines (SDG)***

Design Assumptions and Limitations

This standard shows basic details and requirements for maintenance lighting systems located inside concrete and steel box girder superstructures. It does not show all structural elements and is not intended to show the exact location of conduit runs.

Lighting fixtures and equipment locations must be coordinated with the box girder superstructure details, e.g., structural steel components, metal stay-in-place deck formwork and post tensioning systems in concrete box girders.

This standard may be used in conjunction with Index 21210.

Plan Content Requirements

In the Structures Plans:

See ***SDG*** 4.6, 4.8 and 5.6 for location requirements of electrical components.

Prepare supplemental designs as required showing locations and details of conduit runs, power sources and other electrical components and incidental items.

Payment

Item number	Item description	Unit Measure
715-50	Lighting - Inside Box Girder	LS

Index 21250 Series Access Hatch Assembly

Design Criteria

AASHTO LRFD Bridge Design Specifications, 6th Edition; ***Structures Design Guidelines (SDG)***; ***Structures Detailing Manual (SDM)***

Design Assumptions and Limitations

The Access Hatch Assembly series includes Index 21250 for use with steel box sections and Index 21251 for use with concrete box sections.

Use Index 21250 in accordance with the requirements of ***SDG*** 5.6 for steel box sections and Index 21251 in accordance with the requirements of the ***SDG*** 4.6 for concrete box sections.

The Designer shall analyze access opening sizes and their locations along the bottom flange for structural effects on the girder.

Plan Content Requirements

Locate Access Hatch Assembly locations on framing plans or segment layout sheets and include a cross reference to ***Design Standards*** Index 21250 or 21251 as appropriate.

Payment

The cost of Access Hatch Assemblies is incidental to the cost of the box girders they are used with. No separate payment is made.

Index 21252 Access Door Assembly for Steel Box Sections

Design Criteria

Structures Design Guidelines (SDG) 5.6.2.

Design Assumptions and Limitations

This Access Door Assembly standard is intended for use inside steel box girders to restrict access at end bents and to restrict ingress of birds and bats at end bents and between the ends of adjacent box girders at expansion joint locations.

The Access Door Assembly attaches and closes against the bearing or jacking stiffeners closest to the access opening in the diaphragm. Horizontally oriented plates that are the same depth as the bearing or jacking stiffeners are required adjacent to the top and bottom of the access opening. These plates, in combination with the adjacent stiffeners, complete the rectangular enclosure around the diaphragm access opening that the Access Door fits against. Use this standard as a basis for developing custom project specific Access Door Assemblies if the diaphragm and stiffener configurations are not compatible with those shown on the standard.

The Access Door swings to the inside of the box girder which allows for the door to be completely opened. The Access Door can be opened from both sides which is required between the ends of adjacent box girders at expansion joint locations. When located at end bents, the Access Door can be locked with a padlock located on the inside of the box girder so as to restrict access from the outside.

The size of the openings in the expanded metal mesh was specifically selected to exclude the Brazilian Free-tailed Bat, *Tadarida brasiliensis*, but the small mesh size will also exclude other species of bats found in Florida and most, if not all, birds.

Plan Content Requirements

In the Structures Plans:

On the Diaphragm Detail sheets, show the Access Door Assembly on the inside of the interior diaphragm and include a cross reference ***Design Standards*** Index 21252. Show top and bottom plates adjacent to the diaphragm access opening consistent with the details shown on the standard. Show top and bottom plates to be the same width as the adjacent bearing or jacking stiffeners that they connect to.

Complete the following data table and include it in the plans, preferably on the Diaphragm Detail sheets.

ACCESS DOOR ASSEMBLY FOR STEEL BOX GIRDERS INDEX 21252 - DATA TABLE		Table Date 07-01-15
ACCESS DOOR ASSEMBLY LOCATION	DIM. H	DIM. W

Specify Access Door Assemblies at both ends of simple span box girders and at both ends of continuous box girder units. Include both the unit number and bent or pier number in the location callout.

Dimension "H" is measured from the top of the top plate to the bottom of the bottom plate. Dimension "W" is measured from the outside surfaces of the bearing or jacking stiffeners that are located closest to the diaphragm access opening. A 1" minimum space is recommended between the edges of the access opening and the inside faces of the top and bottom plates and adjacent stiffeners. See ***SDG*** 5.6 for minimum access opening dimensions.

Coordinate the details and locations of adjacent structural members, drain pipes, conduits, lights, etc., within the box girder so as to allow the Access Door to be opened a minimum of 90 degrees from its closed position.

Payment

The cost of Access Door Assemblies is incidental to the cost of the steel box girders they are used with. No separate payment is made.

Example

ACCESS DOOR ASSEMBLY FOR STEEL BOX GIRDERS INDEX 21252 - DATA TABLE		Table Date 07-01-15
ACCESS DOOR ASSEMBLY LOCATION	DIM. H	DIM. W
Unit 1 - End Bent 1	4'-0⅝"	3'-1⅞"
Unit 1 - Pier 4	4'-0⅝"	3'-1⅞"
Unit 2 - Pier 4	4'-0⅝"	3'-1⅞"
Unit 2 - End Bent 7	4'-0⅝"	3'-1⅞"

Index 21300 Standard Bar Bending Details

Design Criteria

AASHTO LRFD Bridge Design Specifications, 6th Edition; ***Structures Detailing Manual (SDM)***; ***ACI 318 Building Code Requirements for Structural Concrete and Commentary***

Design Assumptions and Limitations

Index 21300 includes commonly used types, shapes and configurations of straight and bent reinforcing steel bars. This standard works with the REINFORCING BAR LIST that must be completed and included in the plans for cast-in-place concrete components where the reinforcing steel within the component is not considered incidental to the cost of the component.

Plan Content Requirements

Complete and include in the plans the REINFORCING BAR LIST. Do not include reinforcing steel for drilled shafts, auger cast piles and standard traffic and pedestrian railings, and all precast components, e.g. prestressed concrete piles and beams, MSE wall copings and precast sound barrier posts and panels. For additional information and guidance see the ***Specifications***, ***Design Standards*** and/or ***Instructions for Design Standards*** for a given component.

The REINFORCING BAR LIST may be completed using the Rebar Application provided with the FDOT CADD Bar Menu (preferred method) or it may be prepared by other manual, automated or combination methods. See ***SDM*** 4.3 for reinforcing bar detailing procedures.

Include a reference to Design Standard 21300 on the REINFORCING BAR LIST sheets.

MARK		LENGTH		NO	TYP	STY		B			C			D			E			F			H			J			K			N	Φ
SIZE	DES	FT	IN	BARS	BAR	A	G	FT	IN	FR	FT	IN	FR	FT	IN	FR	FT	IN	FR	FT	IN	FR	FT	IN	FR	FT	IN	FR	FT	IN	FR	NO	ANG

Payment

Item number	Item description	Unit Measure
415-1-A	Reinforcing Steel	LB

Index 21600 Series Temporary Detour Bridge

Design Criteria

AASHTO Standard Specifications for Highway Bridges, 17th Edition (superstructure); ***AASHTO LRFD Bridge Design Specifications*** (substructure); ***Structures Design Guidelines (SDG)***; ***Acrow Panel Bridging Series 300 Technical Handbook***

Design Assumptions and Limitations

These Standards apply to non-limited access facilities with design speeds of 45 mph and less. A variation is required otherwise.

These Standards are based on the FDOT current inventory of temporary bridge components which are manufactured in accordance with Acrow Series 300 Double Wide design. Details presented in these Standards are for a Triple Single (three panels per side, one panel high) configuration and incorporating the Double Wide Light Transom (two-lane). Refer to "***Acrow Panel Bridging Series 300 Technical Handbook***" for temporary bridge dimensions, capacities and component designations. Contact the Structures Design Office to obtain a copy of this handbook.

The Acrow Panel Bridging with the Triple Single configuration with two lanes of traffic is designed to meet a HS25-44 loading at the Inventory Level for spans up to 50 feet (ref. page 86 of the Technical Handbook).

The FDOT Office of Maintenance maintains the inventory of FDOT owned temporary bridge components. Contact the Office of Maintenance to coordinate the availability of temporary bridge components that are required for a given project.

Establish temporary bridge length to accommodate project geometric needs, environmental permits, drainage requirements, etc., using the following span length and arrangement criteria.

Details presented in the standards assume one single span or the use of continuous spans for multiple span bridges. Limit continuous length of bridge to 360' in accordance with these standard details. If a total bridge length in excess of 360' is required, supplemental details are required for the mid-bridge expansion joint(s) and associated intermediate bent support(s).

Vary span lengths in increments of 10' with 30' minimum and 50' maximum span lengths. 60' continuous span lengths may be permitted with concurrence from the State Bridge Maintenance Office. For continuous spans the ratio of adjacent span lengths shall not be less than 6:10 to prevent the shorter span from lifting off its bearings under live load. Specify Distributing Beams at all intermediate supports for all span lengths.

The Approach Span and Ramp Span are to be simple spans, each 5' -0" in length, to eliminate Live Load uplift at the backwall bent and grade beam support.

Do not place the temporary bridge on a vertical curve. A constant grade is acceptable. Do not use the temporary bridge on a horizontal curve. Refer to "***Acrow Panel Bridging Series 300 Technical Handbook***" for maximum grade and elevation tolerance from constant grade (Bent to Bent and Cross-Slope) for final cap elevations.

The temporary bridge is to have a zero cross-slope. Provide asphalt buildup transitions to a zero cross slope outside the limits of the temporary bridge.

To accommodate debris drift clearances, set Low Member Elevation as follows:

For single span bridges, at the bottom of the Transom.

For multiple span bridges, at the bottom of the Distributing Beam.

Design the pile cap connection to pile assuming the truss reaction with a minimum of 3" eccentricity. Design of this connection detail is the responsibility of the Engineer of Record.

Select the pile type considering the driving capacity requirements of the production piles on the permanent bridge, free standing height, water levels if present and soil conditions.

Design the substructure according to current ***AASHTO LRFD Bridge Design Specifications*** Strength Limit States III & V and Service Limit State I:

For open-grate deck Triple Single dead load reactions, approximate the superstructure dead load as 1.42 Kip/Ft.

Calculate wind force on superstructure (WS) using basic wind force of 0.45 Kip/Ft. Ratio the above loading using wind pressures in Table 3.8.1.2.2-1 of ***AASHTO LRFD Bridge Design Specifications***.

Example-

For wind skew of 30°

W Lateral = 0.45 (0.065/0.075) = 0.39 Kip/Ft.

W Longitudinal = 0.45 (0.028/0.075) = 0.17 Kip/Ft.

The 10 Gauge Thrie-Beam Guardrail panels are attached to the temporary bridge with bolts placed between vertical truss members at 10'-0" spacing. This specific type of mounted traffic railing to the temporary bridge is not based on crash tested design; however, will improve the crashworthiness of the system and provide a degree of protection to the bridge trusses from vehicular impact.

The treatment of the approach and trailing ends shall consist of the Thrie-Beam (or Type K Barrier Unit) Approach Transition and Trailing End Transition, respectively, as shown on this Standard. The appropriate guardrail treatments beyond the Approach and Trailing End Transitions shall be determined by the Roadway Engineer. As a minimum, if no other hazards are present, an End Anchorage Assembly Type II shall be provided on the trailing end. On approach ends utilizing the Thrie-Beam Approach Transition, a Transition Block or Curb is required at the end of the bridge. A Transition Block is not required on trailing ends of bridges having no opposing traffic; however, a curb may be

required due to drainage needs. An Index 300, Type D Concrete Curb is generally suitable for this application.

A Thrie-Beam Expansion Section must be installed at the bridge deck expansion joint as shown in the Standard. The Structures Engineer shall identify the locations in the Plans (if any are required) where a Thrie-Beam Expansion Section is to be included in the guardrail.

Plan Content Requirements

Plans for temporary bridge shall, as a minimum, cover the following:

1. General Note Sheet.
2. Simple span bearing details if non-continuous spans are selected.
3. Grade change details at the extremities of the bridge.
4. Plan and elevation sheets with span lengths, stationing, alignment, grade and boring locations.
5. Foundation layout sheet including pile spacing & bent stationing.
6. Temporary Bridge Pile Data Table as shown below in accordance with ***SDG*** 3.5 and ***SDM*** 11.4 included in the contract plans with the Foundation Layout sheets. Modify table and notes as required to accommodate the required number of piles and bents. When not enough space is available on one plan sheet, continuation of the Data Table is acceptable. See Introduction I.3 for more information regarding use of Data Tables.
7. Bent detail sheet.
8. A parts list as required for shipping purposes.
9. Show the appropriate site specific approach and trailing end treatments in the Plans.

TEMPORARY BRIDGE PILE DATA TABLE												Table Date 07/01/13
INSTALLATION CRITERIA						DESIGN CRITERIA						PILE CUT-OFF ELEV.
BENT NUMBER	PILE SIZE and TYPE (in.)	NOMINAL BEARING RESISTANCE (tons)	MINIMUM TIP ELEVATION (ft.)	REQUIRED JET ELEVATION (ft.)	REQUIRED PREFORM ELEVATION (ft.)	FACTORED DESIGN LOAD (tons)	DOWN DRAG (tons)	TOTAL SCOUR RESISTANCE (tons)	NET SCOUR RESISTANCE (tons)	DESIGN SCOUR ELEVATION (ft.)	Ø COMPRESSION (0.45 = default)	

$$\frac{\text{Factored Design Load} + \text{Net Scour Resistance} + \text{Down Drag}}{\text{Ø}} \leq \text{Nominal Bearing Resistance}$$

TOTAL SCOUR RESISTANCE – An estimate of the ultimate static side friction resistance provided by the scourable soil.

NET SCOUR RESISTANCE – An estimate of the ultimate static side friction resistance provided by the soil from the required preformed or jetting elevation to the scour elevation.

DESIGN SCOUR ELEVATION – Estimated elevation of scour due to the design storm event.

PILE INSTALLATION NOTES:

Contractor to verify location of all utilities prior to any pile installation activities.

Minimum Tip Elevation is required for lateral stability.

When a required jetting elevation is shown, the jet shall be lowered to the elevation and continue to operate at this elevation until the pile driving is completed. If jetting or preforming elevations differ from those shown on the table, the Specialty Engineer shall be responsible for determination of the required driving resistance.

No jetting will be allowed without the approval of the Engineer.

The Contractor should not anticipate being allowed to jet piles below the design scour elevation or required jet elevation, whichever is deeper.

At each Bent, pile driving is to commence at the center of the Bent and proceed outward.

Payment

Item number	Item description	Unit Measure
102-2-AA	Special Detour	LS
102-71-14	Barrier Wall, Temporary, F&I, Type K	LF
102-71-24	Barrier Wall, Temporary, Relocate, Type K (if required)	LF
102-73	Temporary Guardrail	LF

Index 21800 Series Post-Tensioning (Rev. 11/16)

Design Criteria

AASHTO LRFD Bridge Design Specifications; ***Structures Design Guidelines (SDG)***; ***Specifications*** Sections 452, 453, 462, 938 and 960.

Design Assumptions and Limitations

Indexes 21801, 21802 and 21803 depict various details and requirements for post-tensioning systems used on Department projects. Use these Standards with ***Specifications*** Sections 452, 453, 462, 938 and 960 and the Approved Post Tensioning Systems List on the SDO website.

Plan Content Requirements

In the Structures Plans:

Design and detail post tensioning tendons and include quantity, geometry, anchorage protection and stressing information on the plans in accordance with these Standards. In cases where the tendon types and anchorage protection details shown in the Standards are not sufficient to meet project specific requirements, obtain Department approval to supplement the drawings with project specific details.

Design and detail using the following standard tendon sizes utilizing 0.6 inch diameter strands: 4, 7, 12, 15, 19, 27 and 31. Design and detail using the following standard bar tendon diameters: 1, 1¼, 1⅜, 1¾, 2½, and 3 inch.

For projects on which permanent post tensioning bar tendons are utilized, complete the "Post-Tensioning Bar Tendon Data Table" shown in Figure 1 and include it in the plans. The following is a column-by-column description of the information to be used when filling out the data table:

Bar Tendon Designation: Indicate the bar tendon designation using a number or letter and number combination.

No. Required: Indicate the total number of required bar tendons of a given designation.

Bar Size: Indicate the bar diameter.

Bar Length: Indicate the bar tendon length measured from anchorage to anchorage (front face of bearing plate).

Stressing Force/Bar: Indicate the stressing force per bar.

Stressing End: Indicate the stressing end as follows:

Ahead Station - Live/stressing end is at the ahead station anchorage for horizontally oriented tendons or at the top anchorage of vertically oriented tendons.

Back Station - Live/stressing end is at the back station anchorage for horizontally oriented tendons or at the bottom anchorage of vertically oriented tendons.

Elongation: Indicate the total theoretical elongation due to stressing.

Tendon Profile: Indicate the tendon profile, e.g. F9, as shown on Index 21801 or a custom tendon profile. Include the geometric effects of the profile grade and cross slope on tendon geometry when determining the appropriate tendon profile.

Filler Material: Indicate the use of grout or flexible filler.

Anchorage Protection Type: Indicate the anchorage protection type using the requirements stated below.

For projects on which strand post tensioning tendons are utilized, complete the "Post-Tensioning Strand Tendon Data Table" shown in Figure 2 and include it in the structures plans. The following is a column-by-column description of the information to be used when filling out the data table:

Strand Tendon Designation: Indicate the strand tendon designation using a number or letter and number combination.

No. Required: Indicate the total number of required strand tendons of a given designation.

Tendon Size: Indicate the number and size of strands, e.g. 12-0.6.

Tendon Length: Indicate the strand tendon length measured from anchorage to anchorage (front face of anchorage/bearing plate).

Ahead Station Stressing Force per Tendon: Indicate the stressing force per tendon at the ahead station.

Back Station Stressing Force per Tendon: Indicate the stressing force per tendon at the back station.

Stressing End: Indicate the stressing end as follows:

Ahead Station - Live/stressing end is at the ahead station anchorage for horizontally oriented tendons or at the top anchorage of vertically oriented tendons.

Back Station - Live/stressing end is at the back station anchorage for horizontally oriented tendons or at the bottom anchorage of vertically oriented tendons.

Elongation: Indicate the total theoretical elongation due to stressing.

Tendon Profile: Indicate the tendon profile, e.g. F1, as shown on Index 21801 or a custom tendon profile. Include the geometric effects of the profile grade and cross slope on tendon geometry when determining the appropriate tendon profile.

Filler Material: Indicate the use of grout or flexible filler.

Anchorage Protection Type: Indicate the anchorage protection type using the requirements stated below.

Use the following guide to determine the appropriate tendon profile for typical strand, wire and bar tendons as applicable.

Filler Material	Tendon Profile	Typical Use
Flexible	F1	Internal tendons in beams, girders, flat slabs or straddle pier caps
	F2	External tendons in box girders
	F3	External tendons in U-girders
	F4	Internal tendons in hammerhead or C-pier caps
	F5	Internal tendons in beams, girders, flat slabs, straddle pier caps or footings
	F6	Internal tendons in hammerhead or C-pier caps
	F7	Internal tendons in beams, girders, flat slabs, straddle pier caps or footings
	F8	Tendons in pier columns or walls
	F9	Tendons in pier columns, webs of box girders or walls
	F10	Internal tendons in hammerhead or C-pier caps
	F11	Internal tendons in beams, girders, flat slabs, straddle pier caps, footings or bottom continuity tendons in box girders constructed using the balanced cantilever method
	F12	Top external continuity tendons in end spans of box girders
	F13	Bottom external continuity tendons in end spans of box girders
	F14	Top external continuity tendons and general use
Grout	G1	Internal tendons in flat slabs
	G2	Transverse internal tendons in the top slabs of box girders
	G3	Longitudinal internal tendons in the top slabs of box girders constructed using the balanced cantilever method
	G4	Internal tendons in single span flat slabs
	G5	General use primarily in deck slabs
	G6	Internal tendons in pier columns, webs of box girders or walls

If necessary, custom tendon profiles may be used and/or the note(s) below the Data Tables may be modified on a project by project basis to better define unusual or unique tendon profiles or arrangements. Custom tendon profiles or modifications to the notes must comply with requirements of the ***Structures Manual*** and be consistent with the ***Specifications***. If custom tendon profiles are used:

1. Detail the tendon profiles in a manner consistent with Index 21801;
2. Label the custom tendon profiles "C1, C2, etc.";
3. Add the following to Footnote 2 beneath the appropriate Data Table if the custom tendon profiles are not shown on the same sheet as the Data Table:
   See Sheet BX-XX for "C" tendon profiles.

Indicate the anchorage protection type using the following descriptions in conjunction with the following figure and the details shown on Index 21802.

Type 1 - Anchorage protection used for exposed surfaces for tendons on Segmental Box Girder Superstructures, Integral or Straddle Pier Caps, Footings, or ends of spliced Girder Segments.

Type 2 - Anchorage protection used for tendons anchoring in top flange blockouts.

Type 3A - Top inspected anchorage protection used for cantilever tendons on Segmental Box Girder Superstructures constructed using precast balanced cantilever method.

Type 3B - Top inspected anchorage protection used for cantilever tendons on Segmental Box Girder Superstructures constructed using cast-in-place balanced cantilever method.

Type 4 - Anchorage protection used for tendons on the top surfaces of Piers and for exposed blisters in I-Girders.

Type 5 - Anchorage protection used for tendons with interior blisters on Segmental Box Girder Superstructures.

Type 6 - Anchorage protection used for tendons on Flat Slab Superstructures.

Type 7 - Anchorage protection used for transverse tendons (generally 4 strands or less) on Segmental Box Girder Superstructures and other transversely post-tensioned superstructures.

Type 8 - Dead end anchorage protection used for vertical bar tendons.

Type 9 - Anchorage protection used for bar tendons on Segmental Box Girder Pier Diaphragms, Footings, top surfaces of Piers, Integral or Straddle Pier Caps, etc.

Type 10 - Anchorage protection used for bar tendons on the top surfaces of Piers.

Types 11 & 12 - Anchorage protection used for bar tendons primarily on Integral or Straddle Pier Caps.

Anchorage Protection Types for Footing and Pier Post-Tensioning Applications

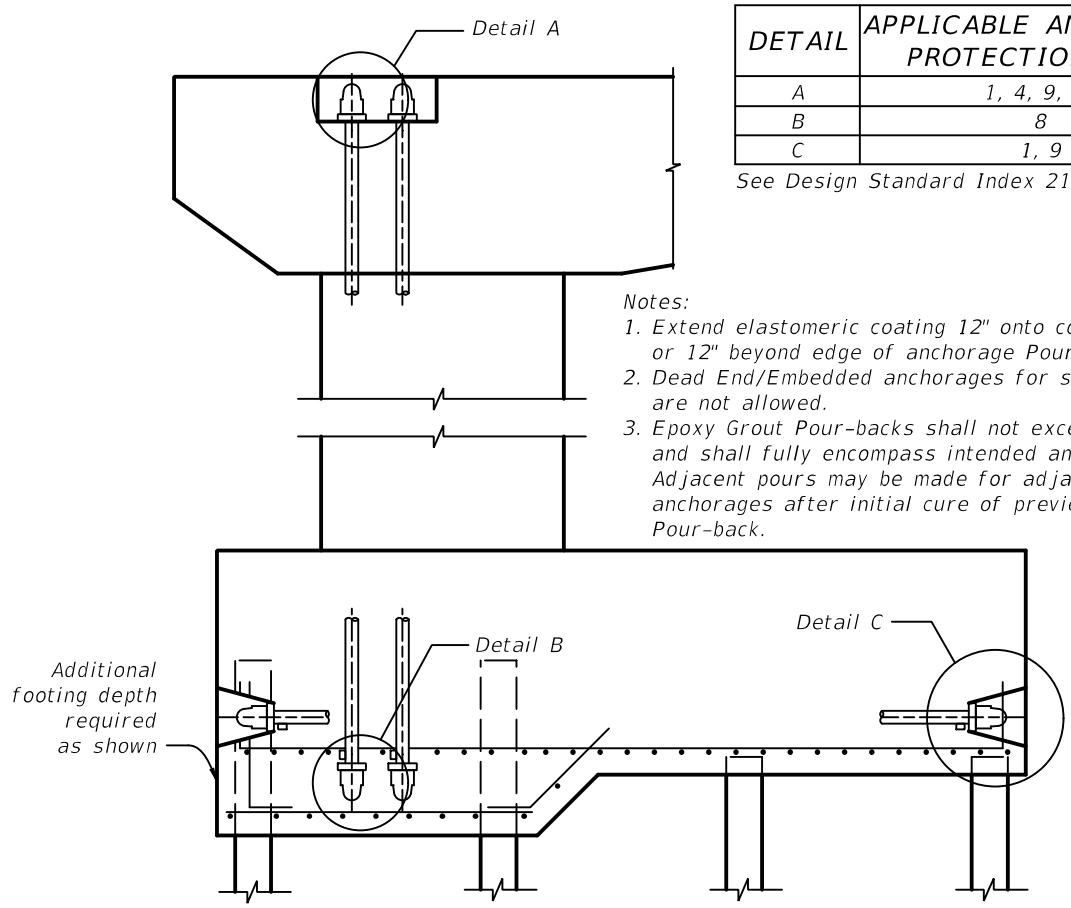

DETAIL	APPLICABLE ANCHORAGE PROTECTION TYPE
A	1, 4, 9, 10
B	8
C	1, 9

See Design Standard Index 21802.

Notes:
1. Extend elastomeric coating 12" onto concrete edges or 12" beyond edge of anchorage Pour-back.
2. Dead End/Embedded anchorages for strand or wire are not allowed.
3. Epoxy Grout Pour-backs shall not exceed 16 CF and shall fully encompass intended anchorage(s). Adjacent pours may be made for adjacent anchorages after initial cure of previous Pour-back.

FOOTING/PIER SCHEMATIC

Prepare tendon Mockups and associated details and include them in the plans for use in combination with the filler injection demonstrations required by ***Specifications*** Section 462-7. Mockups are not required for grouted transverse tendons in the top slabs of box girders and for vertical bar tendons in the webs or diaphragms of box girders. Prepare Mockups and details for all other tendons using the following steps.

Step 1: Select a Representative Tendon Profile from the following table and figure for each type or family of tendons on the project. Representative Tendon Profiles are applicable to tendons with either grout or flexible filler.

Actual Tendon Profile (See Index 21801)	Representative Tendon Profile
F1, F2 and F3	A
F4, F6 and F10	B
F5, F7 and F11	C
F8 and F9	E
F12, F13 and F14	D
G1	A
G3	B
G4	C
G5	D
G6	E

Representative Tendon Profiles (with Grout or Flexible Filler)

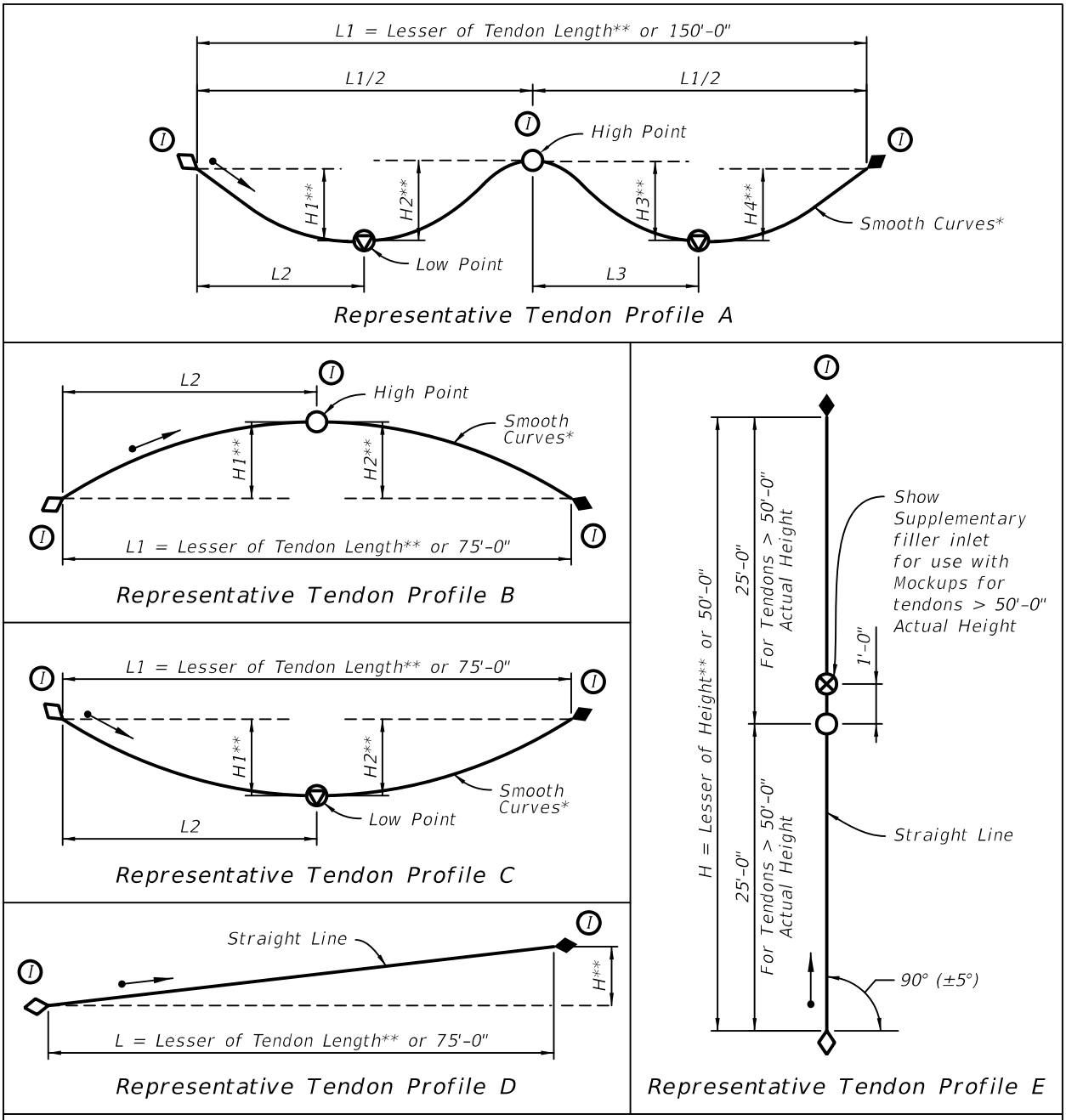

Step 2: Organize the Representative Tendon Profiles selected in Step 1 into groups in the following order of priority:

a. Filler material

b. Similar/comparable overall tendon geometry. From this point forward, the actual location of a given tendon within the bridge is not a factor in determining the need for a Mockup of the tendon.

c. Lengths "L" and heights "H". Neglect horizontal deviations in tendon geometry when calculating lengths "L".

Step 3: Select at least one Representative Tendon Profile from each group created in Step 2 for further development into Mockups for inclusion in the plans. Keep the number of required Mockups to a minimum by comparing tendons from different groups that have similar/comparable geometries, sizes and filler material and then selecting the governing tendon or particular characteristic from the groups.

Commentary: A Mockup of a long tendon with more complicated geometry may serve as the mockup for a shorter tendon with less complicated geometry and the same filler material, e.g. a single Mockup Profile A with flexible filler may also serve as the mockup for other tendons with Mockup Profiles B, C and/or D, flexible filler and comparable heights "H".

Step 4: Develop a Mockup for each Representative Tendon Profile selected in Step 3 and include it in the plans. Show the following information for each Mockup:

a. Detail Title referencing the project specific tendon numbers for which the mockup is applicable

b. Mockup layout showing dimensions "L", "L1", "L2", "L3", "H", "H1", "H2", "H3" and/or "H4" as applicable. Use the maximum lengths "L" and heights "H" of comparable or similar tendons from a given group. Round off lengths "L" and "L1" of Mockup Profiles A through D and height "H" for Mockup Profile E to the nearest foot. Round off heights "H", "H1", "H2", "H3" and "H4" for Mockup Profiles A through D to the nearest inch.

c. Tendon size, i.e., number of strands or diameter of bar. Specify the largest number of strands or largest bar diameter of all the tendons within a given group.

d. Anchorage size

e. Filler material, i.e., grout or flexible filler

f. Specify the injection of flexible filler with vacuum assistance where required by the Specifications

g. Legend (based on the legend shown on the Representative Tendon Profiles figure above)

Step 5: For each Mockup developed in Step 4, show a detail of the anchorage, trumpet and duct adjacent to the trumpet/anchorage embedded in a Concrete Anchorage Block as shown in the following figures. Total encapsulation of a mockup internal tendon in concrete is not required. For mockups of top slab cantilever tendons in segmental box girders, show an additional block of concrete placed immediately adjacent to the face of the concrete anchorage block on the blockout side to simulate the presence of an adjacent cantilever segment. Include the following notes for the Concrete Anchorage Block Details:

a. Use project specific shape and dimensions for the anchorage blockout/recess.

b. Provide nominal reinforcement; spiral or other general zone reinforcement are not required.

Concrete Anchorage Block Detail for Strand Tendons

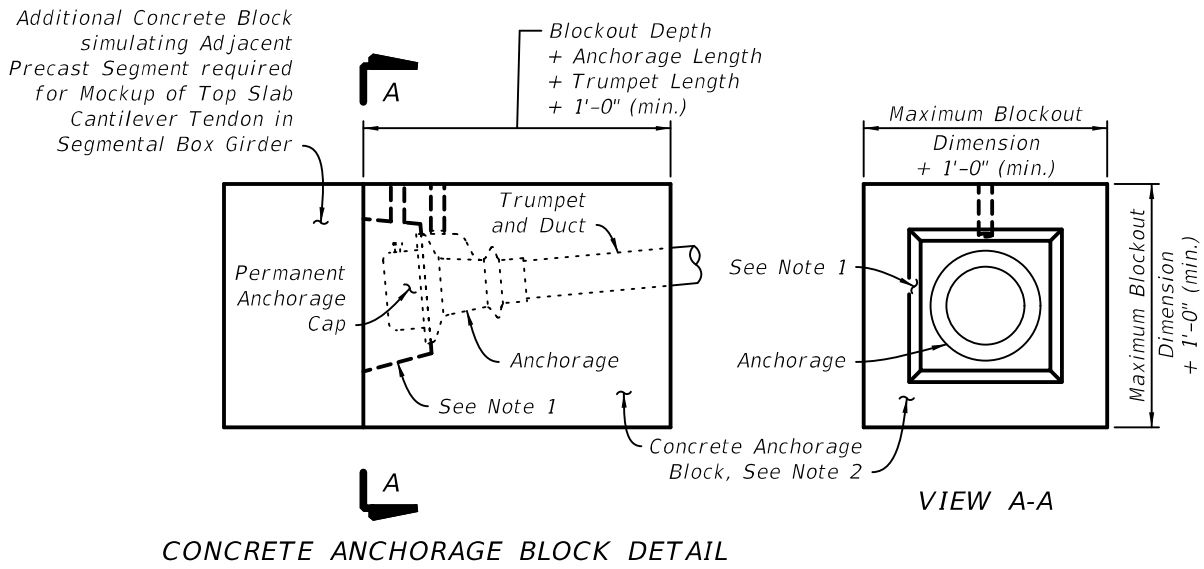

NOTES:
1. Use project specific shape and dimensions for the anchorage blockout/recess.
2. Provide nominal reinforcement; spiral or other general zone reinforcement are not required.

Concrete Anchorage Block Detail for Bar Tendons

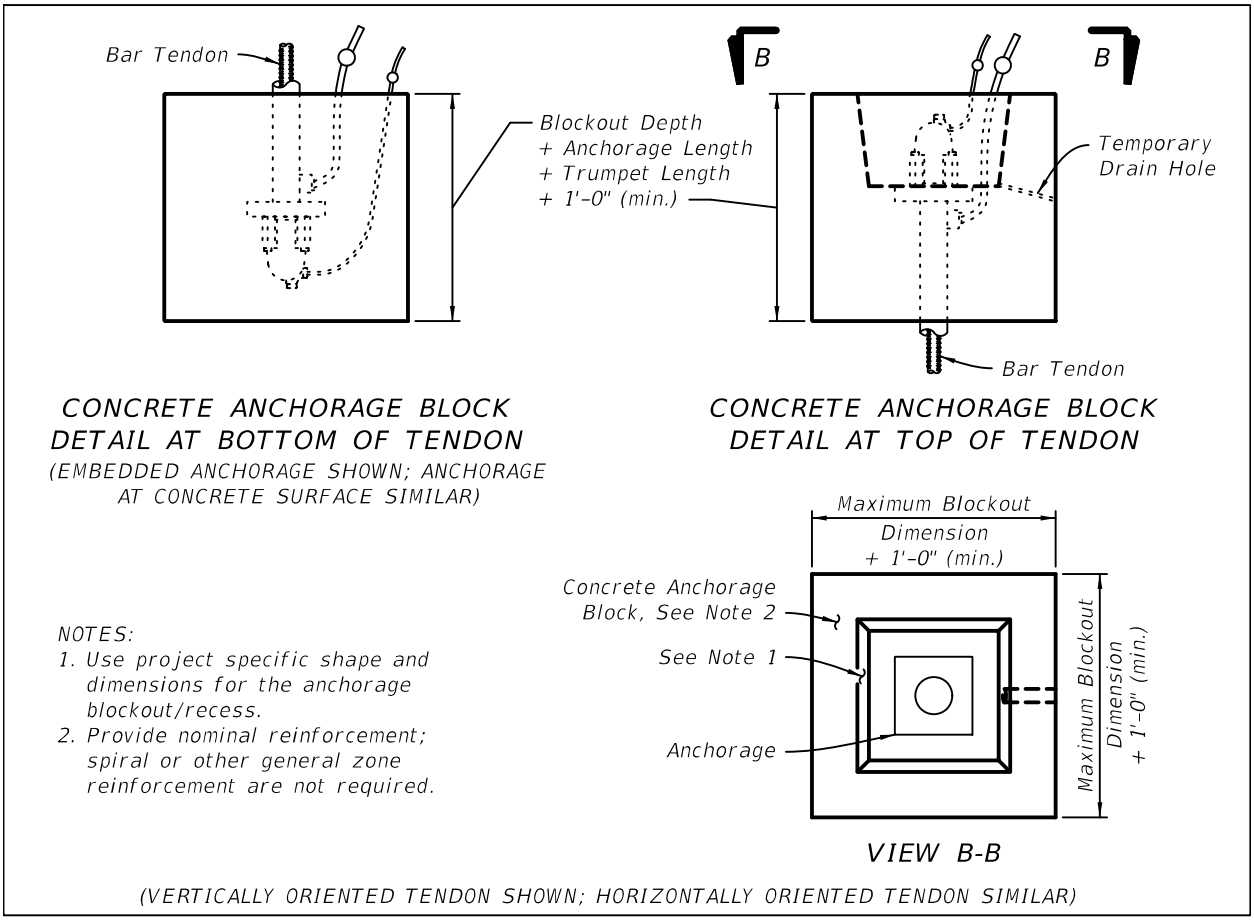

Payment

Item number	Item description	Unit Measure
462-2-AA	Post Tensioning Tendons	LB
462-3	Additional Post Tensioning in Segmental Box Span *Note: Use for rehabilitation projects only*	EA

Figure 1 Post-Tensioning Bar Tendon Data Table

POST-TENSIONING BAR TENDON DATA TABLE										Table Date 07-01-16
BAR DESIGNATION	NO. REQUIRED	BAR SIZE	BAR LENGTH (Ft-in)	STRESSING FORCE PER BAR (kips)	STRESSING END [1]	ELONGATION (in)	TENDON PROFILE [2]	FILLER MATERIAL	ANCHORAGE PROTECTION TYPE [3]	
									AHEAD STA.	BACK STA.

For non-longitudinal bars, ahead-station denotes left anchorage, back-station denotes right anchorage (looking ahead-station). For mostly vertical bars, ahead-station denotes top anchorage, back-station denotes bottom anchorage.

[1] Stressing End Definitions:
- Ahead Station: Bar Live/Stressing End is ahead-station anchorage.
- Back Station: Bar Live/Stressing End is back-station anchorage.

[2] See Post-Tensioning Tendon Profiles, Design Standards Index 21801.

[3] See Post-Tensioning Anchorage Protection, Design Standards Index 21802.

Figure 2 Post-Tensioning Strand Tendon Data Table

POST-TENSIONING STRAND TENDON DATA TABLE															Table Date 07-01-16
TENDON DESIGNATION	NO. REQUIRED	TENDON SIZE	TENDON LENGTH (Ft-in)	AHEAD-STATION STRESSING FORCE PER TENDON (kips)	BACK-STATION STRESSING FORCE PER TENDON (kips)	FORCE @ AHEAD-STATION END AFTER ANCHOR SET (kips)	FORCE @ BACK-STATION END AFTER ANCHOR SET (kips)	STRESSING END [1]	THEORETICAL ELONGATION @ AHEAD-STATION END (in)	THEORETICAL ELONGATION @ BACK-STATION END (in)	TENDON PROFILE [2]	FILLER MATERIAL	ANCHORAGE PROTECTION TYPE [3]		
													AHEAD STA.	BACK STA.	

In general, for non-longitudinal tendons, ahead-station denotes left anchorage, back-station denotes right anchorage (looking ahead-station). For mostly vertical tendons, ahead-station denotes top anchorage, back-station denotes bottom anchorage.

[1] Stressing End Definitions:
- Ahead Station: Tendon Live/Stressing End is ahead-station anchorage.
- Back Station: Tendon Live/Stressing End is back-station anchorage.
- Alternate (ahead/back): Tendon Initial Live/Stressing End is ahead-station anchorage with associated elongation.
  Tendon Subsequent Live/Stressing End is back-station anchorage with associated elongation.
- Alternate (back/ahead): Tendon Initial Live/Stressing End is back-station anchorage with associated elongation.
  Tendon Subsequent Live/Stressing End is ahead-station anchorage with associated elongation.
- Double: Tendon Live/Stressing End is simultaneously the ahead-station and back-station anchorage with respective elongations.

[2] See Post-Tensioning Tendon Profiles, Design Standards Index 21801.

[3] See Post-Tensioning Anchorage Protection, Design Standards Index 21802.

Sample Tables

POST-TENSIONING BAR TENDON DATA TABLE — Table Date 07-01-16

BAR DESIGNATION	NO. REQUIRED	BAR SIZE	BAR LENGTH (Ft-in)	STRESSING FORCE PER BAR (kips)	STRESSING END [1]	ELONGATION (in)	TENDON PROFILE [2]	FILLER MATERIAL	ANCHORAGE PROTECTION TYPE [3]	
									AHEAD STA.	BACK STA.
PT-1	6	1¼ Ø	21'-9"	131	AHEAD STA.	0.940"	G5	GROUT	10	10
PT-2	8	1 3/16 Ø	16'-6"	165	BACK STA.	0.713"	G5	GROUT	10	10
PT-3	24	1¾ Ø	80'-0"	280	BACK STA.	3.540"	F14	FLEXIBLE	9	8

For non-longitudinal bars, ahead-station denotes left anchorage, back-station denotes right anchorage (looking ahead-station). For mostly vertical bars, ahead-station denotes top anchorage, back-station denotes bottom anchorage.

[1] Stressing End Definitions:
- Ahead Station: Bar Live/Stressing End is ahead-station anchorage.
- Back Station: Bar Live/Stressing End is back-station anchorage.

[2] See Post-Tensioning Tendon Profiles, Design Standards Index 21801.

[3] See Post-Tensioning Anchorage Protection, Design Standards Index 21802.

POST-TENSIONING STRAND TENDON DATA TABLE — Table Date 07-01-16

TENDON DESIGNATION	NO. REQUIRED	TENDON SIZE	TENDON LENGTH (Ft-in)	AHEAD-STATION STRESSING FORCE PER TENDON (kips)	BACK-STATION STRESSING FORCE PER TENDON (kips)	FORCE @ AHEAD-STATION END AFTER ANCHOR SET (kips)	FORCE @ BACK-STATION END AFTER ANCHOR SET (kips)	STRESSING END [1]	THEORETICAL ELONGATION @ AHEAD-STATION END (in)	THEORETICAL ELONGATION @ BACK-STATION END (in)	TENDON PROFILE [2]	FILLER MATERIAL	ANCHORAGE PROTECTION TYPE [3]	
													AHEAD STA.	BACK STA.
1	6	12-0.6	650'-0⅞"	562.5	562.5	454.9	468.9	Alt. (back/ahead)	10.9	32.2	F1	FLEXIBLE	1	1
2	6	12-0.6	650'-1¾"	562.5	562.5	456.3	456.3	Alt. (back/ahead)	10.8	31.6	F1	FLEXIBLE	1	1
3	6	12-0.6	650'-3 5/16"	562.5	562.5	458.4	459.8	Alt. (back/ahead)	10.6	31.0	F1	FLEXIBLE	1	1
4	6	12-0.6	650'-6¼"	562.5	562.5	465.4	465.4	Alt. (back/ahead)	10.6	30.3	F1	FLEXIBLE	1	1

In general, for non-longitudinal tendons, ahead-station denotes left anchorage, back-station denotes right anchorage (looking ahead-station). For mostly vertical tendons, ahead-station denotes top anchorage, back-station denotes bottom anchorage.

[1] Stressing End Definitions:
- Ahead Station: Tendon Live/Stressing End is ahead-station anchorage.
- Back Station: Tendon Live/Stressing End is back-station anchorage.
- Alternate (ahead/back): Tendon Initial Live/Stressing End is ahead-station anchorage with associated elongation.
  Tendon Subsequent Live/Stressing End is back-station anchorage with associated elongation.
- Alternate (back/ahead): Tendon Initial Live/Stressing End is back-station anchorage with associated elongation.
  Tendon Subsequent Live/Stressing End is ahead-station anchorage with associated elongation.
- Double: Tendon Live/Stressing End is simultaneously the ahead-station and back-station anchorage with respective elongations.

[2] See Post-Tensioning Tendon Profiles, Design Standards Index 21801.

[3] See Post-Tensioning Anchorage Protection, Design Standards Index 21802.

Mockup Example

A four span bridge with Straddle and C-pier substructure and a segmental box girder superstructure as follows:

Substructure Pier 2

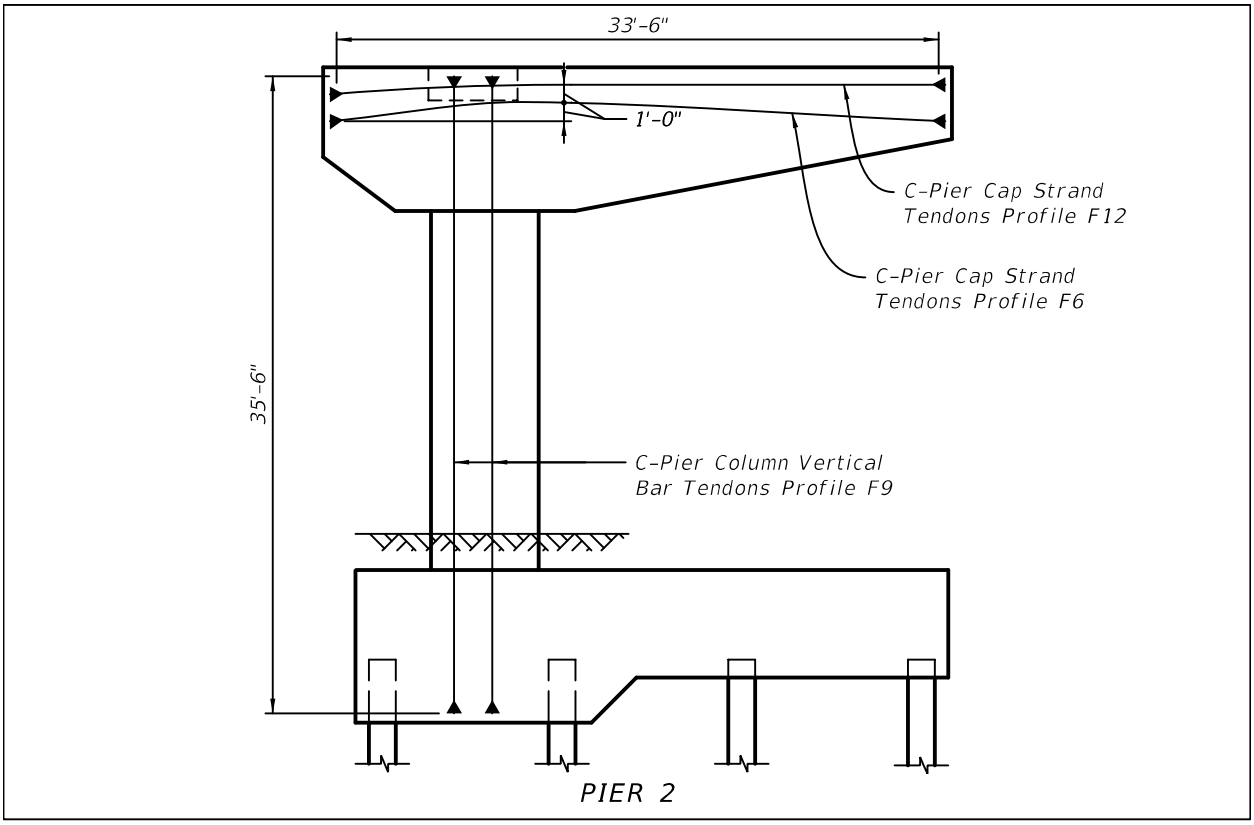

Substructure Pier 3

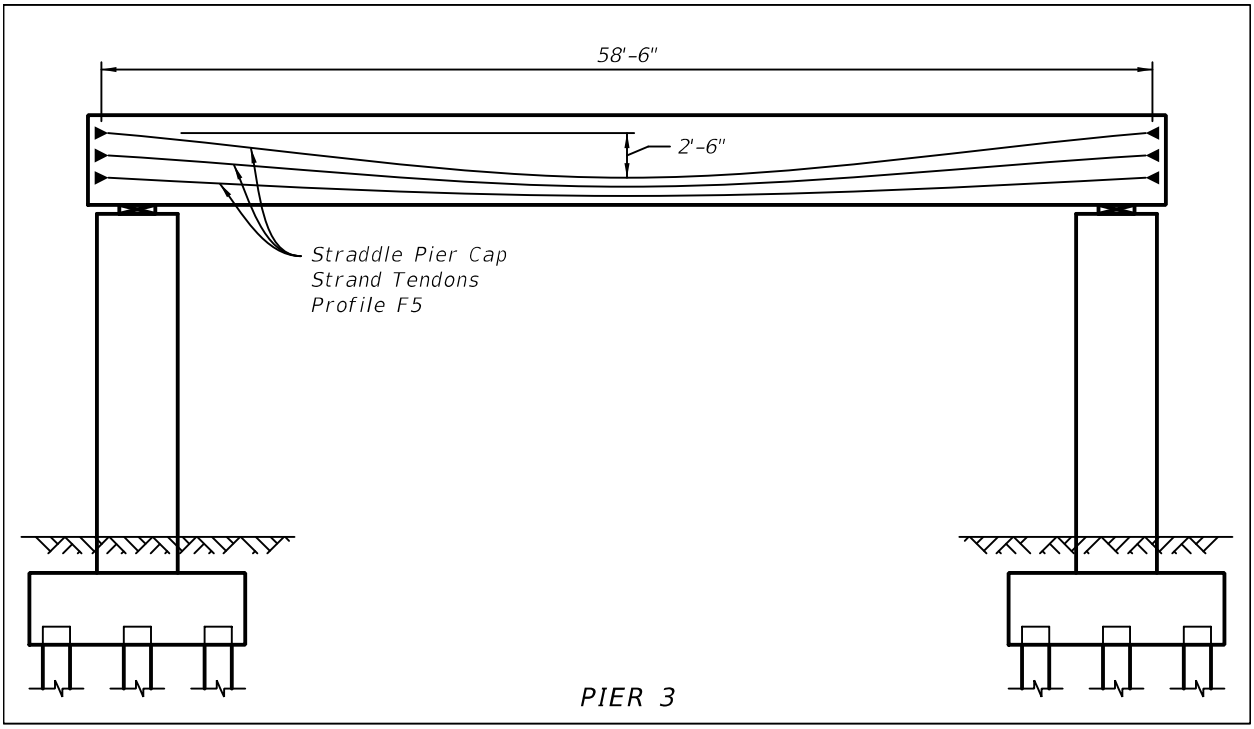

Substructure Pier 4

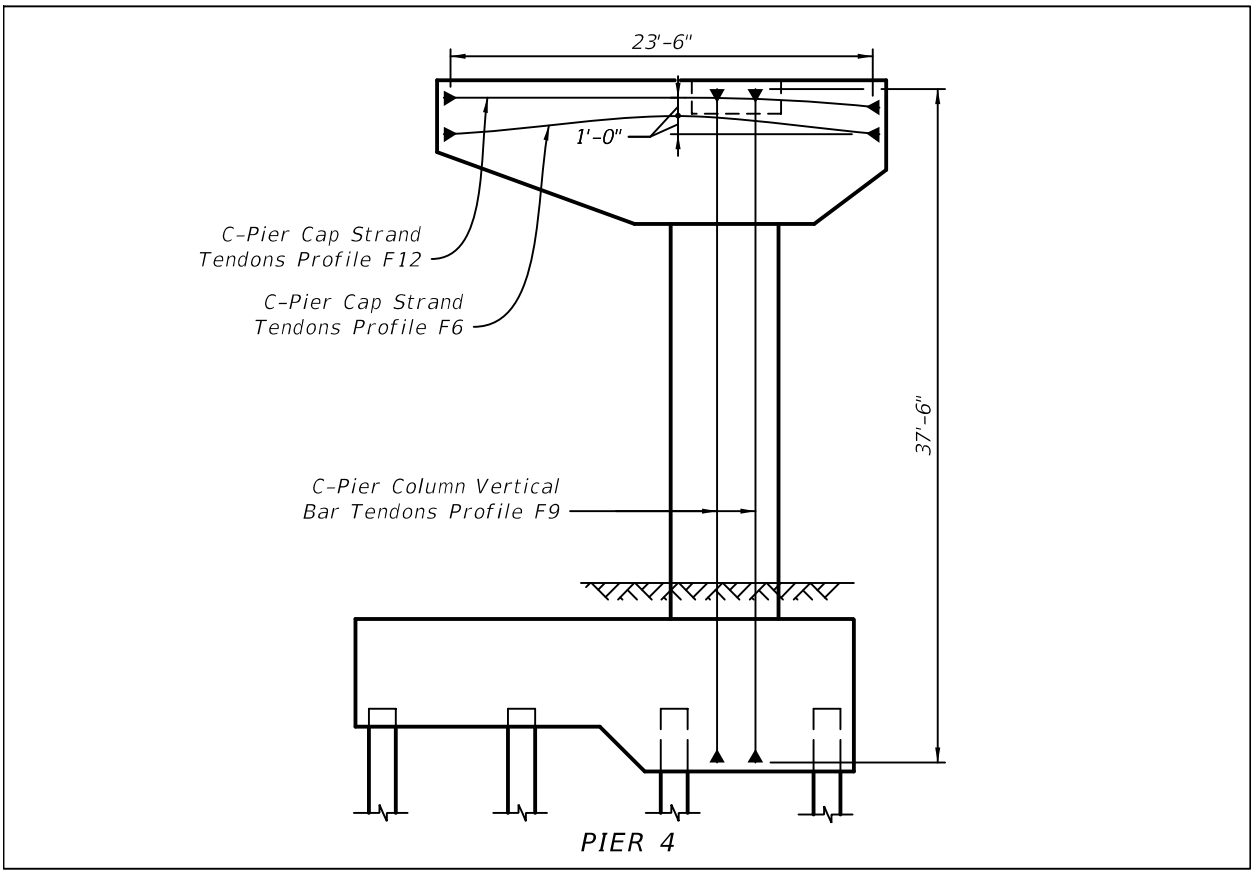

Superstructure

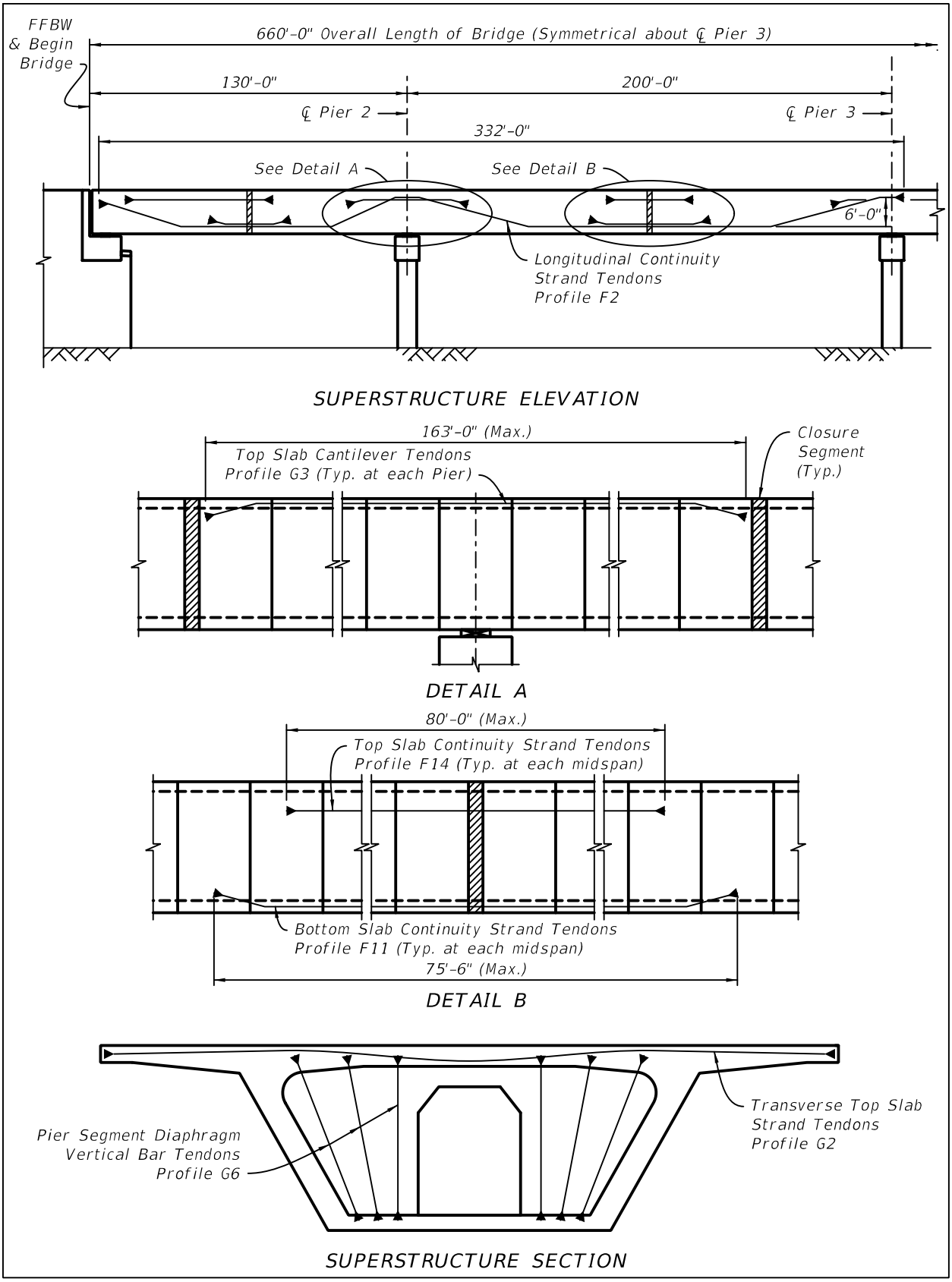

Steps 1, 2 and 3 (presented in tabular form in this IDS for simplicity):

Location	Tendon Type	Actual Tendon Profile (See Index 21801)	Step 1: Select Representative Tendon Profiles	Step 2: Organize Representative Tendon Profiles into Groups	Step 3: Develop a Mockup for inclusion in the Plans? (Yes/No)
Substructure	Vertical bar tendons in columns of Piers 2 and 4	F9	E	Group 1	Yes
	Strand tendons in caps of Piers 2 and 4	F6	B	Group 2	No - use Group 2, Profile A
	Strand tendons in caps of Piers 2 and 4	F12	D	Group 2	No - use Group 2, Profile A
	Strand tendons in cap of Pier 3	F5	C	Group 2	No - use Group 2, Profile A
Superstructure	Top slab cantilever strand tendons	G3	B	Group 3	Yes
	Transverse top slab strand tendons	G2	No mockup required	N/A	N/A
	Longitudinal continuity strand tendons	F2	A	Group 2	Yes
	Top slab continuity strand tendons	F14	D	Group 2	No - use Group 2, Profile A
	Bottom slab continuity strand tendons	F11	C	Group 2	No - use Group 2, Profile A
	Vertical bar tendons in the pier segment diaphragms	G6	No mockup required	N/A	N/A

Step 4: Develop Mockup details for each Representative Tendon Profile selected in Step 3

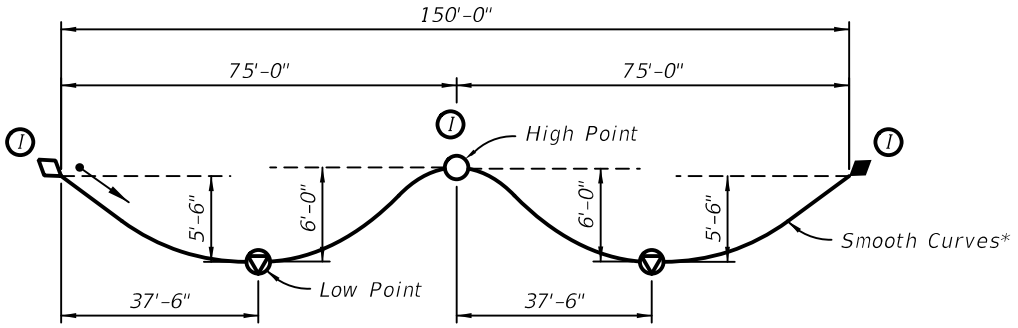

MOCKUP FOR LONGITUDINAL AND TOP SLAB CONTINUITY STRAND TENDONS AND PIERS 2, 3 AND 4 CAP STRAND TENDONS

TENDON SIZE: 19 - 0.6" Ø STRANDS
ANCHORAGE SIZE: 19 - 0.6" Ø STRAND ANCHORAGE
FILLER MATERIAL: FLEXIBLE FILLER
VACUUM ASSISTED FILLER INJECTION IS REQUIRED

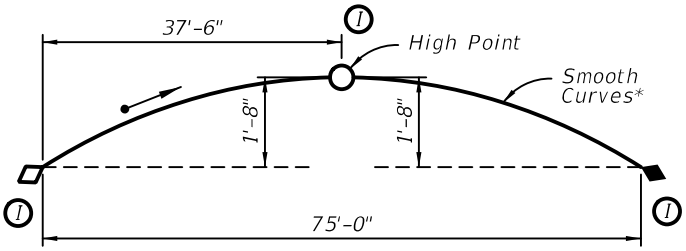

MOCKUP FOR TOP SLAB CANTILEVER STRAND TENDONS

TENDON SIZE: 12 - 0.6" Ø STRANDS
ANCHORAGE SIZE: 12 - 0.6" Ø STRAND ANCHORAGE
FILLER MATERIAL: GROUT

LEGEND:

- Strand or Bar Tendon
- Concrete Anchorage Block with Filler Inlet at lower end of Tendon, See Detail
- Concrete Anchorage Block with Filler Outlet at higher end of Tendon, See Detail
- Drain (See Specifications Section 462 for additional Drain location requirements)
- Filler Outlet
- Direction of Filler Flow
- Inspection Location

* For curved profiles, place ducts along smooth curves as shown, or along a series of chords approximating smooth curves.

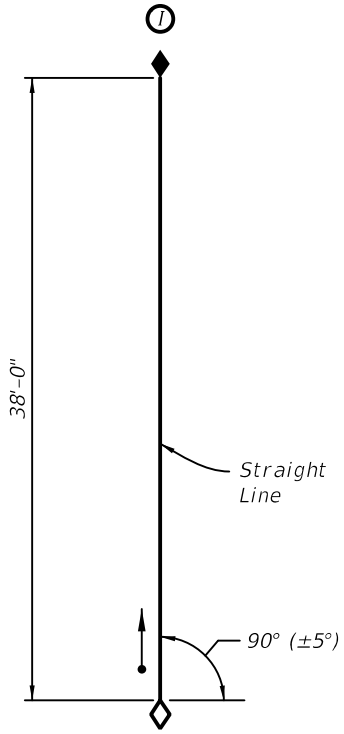

MOCKUP FOR PIERS 2 AND 4 COLUMN VERTICAL BAR TENDONS

TENDON SIZE: 1¾" Ø BAR
ANCHORAGE SIZE: 1¾" Ø BAR ANCHORAGE
FILLER MATERIAL: FLEXIBLE FILLER

Step 5: Include Concrete Anchorage Block Details for Strand and Bar Tendons as shown in Plan Content Requirements above.

Commentary: Tendon mockups are to be used by the contractor in conjunction with the Grouting Operations Plan or Wax Injection Operations Plan and associated equipment, materials and personnel to demonstrate that the requirements of Specification 462 can be met using the proposed means and methods.

All components of a PT system that will be used for a given tendon in the actual bridge are to be used in the mockup with the exception of segmental duct couplers, corrugated PP duct and steel pipe. Segmental duct couplers only function when clamped together (by PT forces in the actual bridge) and their presence in tendon mockups is not necessary for tendon filling operations to be tested. Smooth PE duct is to be used for mockups of all tendons, including internal tendons which will have corrugated PP duct and all tendons which will have steel pipe in the actual bridge. Corrugated PP duct and its associated couplers are only intended to be used with, and tested to withstand, grouting pressures when located inside hardened concrete. The use of steel pipe is not necessary for tendon filling operations to be tested, smooth PE duct is sufficient.

The tendon geometries, lengths and heights shown in the mockup profiles have been determined to be sufficient for the contractor to demonstrate that filling operations can be conducted successfully for the applicable tendons. The use of longer or taller mockup tendons is not required.

Index 21930 Fender Systems - Prestressed Concrete Piles

Design Criteria

Structures Design Guidelines (SDG) 3.14

Design Assumptions and Limitations

Do not use this fender system unless approved by the District for use on the specific project.

Design Standards Index 21930 includes a fully designed Fender System with 14" square prestressed concrete piling having an **"Energy Capacity" of 38 ft-kip**.

Refer to ***SDG*** 3.14 for additional Fender System design criteria, assumptions and limitations.

Use this standard with Index 21220.

Plan Content Requirements

In the Structures Plans:

Include Index 21930 on waterways where a fender system is required and no barge traffic is present

Prepare and include in the plans supplemental project specific designs and details for the following items:

- Electrical service for navigation lights including conduit path from bridge to fender system and identification of service point. Coordinate design with Index 21220 and ***Specifications*** Section 510.
- Access ladders and catwalks from bridge to fender system are optional and may be included at the discretion of the District.

Designate in the plans the type of decking material to be used for catwalks: 2" x 12" Plastic Lumber or Fiberglass Open Grating. Catwalk decking material shall be determined by the District.

Complete the following "Data Tables" and include them in the plans. One "Estimated Bill of Materials Table" and one "Fender System Table of Variables" are required for each Fender System location within a project. For projects with multiple fender systems or configurations, clearly note which Fender System the Tables are applicable to. See Introduction I.3 for more information regarding use of Data Tables.

Base the Minimum Pile Tip Elevations on the minimum embedment of 20 feet for the 14" square prestressed concrete piles into soil having a blow count (N) greater than 6.

Provide the required Clearance Gauge details in the plans adjacent to the Data Tables. Specify the numeral height, sign dimensions, foot marks and intermediate foot marks (when required), based on coordination with the USCG District Commander, 33 CFR 118.160 and the USCG Bridge Lighting and Other Signals Manual.

Table for use with Index 21930 Fender Systems - Prestressed Concrete Piles:

ESTIMATED BILL OF MATERIALS FENDER SYSTEM - PRESTRESSED CONCRETE PILES DESIGN STANDARDS INDEX NO. 21930			Table Date 07-01-11
MARK	NO. REQ'D.	UNIT	QUANTITY
A1		MB	
A2		MB	
A3		MB	
A4		MB	
A5		MB	
A6		MB	
B		MB	
C		MB	
D		MB	
* E		MB	
F1		MB	
F2		MB	
F3		MB	
F4		MB	
F5		MB	
F6		MB	
G1		MB	
G2		MB	
H1		MB	
H2		MB	

NOTE: For Member Marks, Sizes and Dimensions see Design Standards Index No. 21930, Sheet 7.

Bill of Materials Table above is for an entire fender system (left and right fenders).

* Provide 2'-6" wide Fiberglass Open Grating for full length of fender in lieu of 2" X 12" Plastic Lumber when called for in Plans. Provide Stainless Steel Mounting Hardware and install per Manufacturer's recommendations. See Index 21930 for notes. Include the cost of Fiberglass Open Grating and miscellaneous items required to install the grating in the price for Plastic Marine Lumber (Non-Reinforced).

FENDER SYSTEM TABLE OF VARIABLES INDEX NO. 21930		Table Date 07-01-11
CONTROL POINTS	STATION	OFFSET Lt. or Rt.
A		
B		
C		
D		
DIMENSION "L"		
CLEAR CHANNEL WIDTH		
CHANNEL SKEW ANGLE		
MHW or NHW ELEVATION		
MLW or NLW ELEVATION		
PILE CUTOFF ELEVATION		
MINIMUM PILE TIP ELEVATION LEFT FENDER		
PILE LENGTH LEFT FENDER		
MINIMUM PILE TIP ELEVATION RIGHT FENDER		
PILE LENGTH RIGHT FENDER		
NUMBER OF WALE ROWS		

NOTE: Work this Table with Design Standards Index 21930.

Payment

Include quantity for Composite Marine Lumber 10" X 10" Wales Mark A under Pay Item for Plastic Marine Lumber (Reinforced). Include quantity for all other Plastic Lumber under Pay Item for Plastic Marine Lumber (Non-Reinforced).

In TRNS*PORT, include estimated quantities for the Index 21930 fender systems.

Item number	Item description	Unit Measure
471-1-1	Fender System, Plastic Marine Lumber, Reinforced	MB
471-1-2	Fender System, Plastic Marine Lumber, Non- Reinforced	MB
455-34-2	Prestressed Concrete Piling, 14" Sq.	LF

Index 22440 Precast Concrete CFRP/GFRP & HSSS/GFRP Sheet Pile Wall (Rev. 11/16)

Design Criteria

AASHTO LRFD Bridge Design Specifications; ***Fiber Reinforced Polymer Guidelines (FRPG); ACI 440.1R-06 Guide for the Design and Construction of Structural Concrete Reinforced with FRP Bars; ACI 440.4 Prestressing Concrete Structures with FRP Tendons.***

Design Assumptions and Limitations

These piles are typically jetted into place rather than driven like a bearing pile. If shallow rock formations exist within the wall limits, other wall types must be considered.

A cast-in-place reinforced concrete bulkhead cap is required to structurally tie the tops of the concrete sheet piles together.

These piles can be used for cantilevered walls or tied-back walls. Project specific designs and details are required for tie-backs. If the length of piles required for a cantilevered wall exceeds the limits shown on the standard drawings, consider using tie-backs.

These piles are intended for extremely aggressive environments.

The grouted keyway used in combination with plastic filter fabric (the limits of both are defined by dimension "X") are assumed to not be watertight. Thus they contain the soil behind the wall while still allowing groundwater behind the wall to weep through. No other separate weep holes are generally required. The bottom of the "X" dimension is required to be 1'-8" below the mud line.

The tip elevation of piles shall be determined by the Geotechnical Engineer.

See additional information on the Standard Drawing.

Plan Content Requirements

Insert the entire ***Developmental Design Standards*** Index, received from the Central Office monitor, into the appropriate component plan set in accordance with ***PPM***, Volume 2, Section 3.8.

In the Structures or Roadway Plans:

Prepare Wall Control Drawings and related drawings as specified in ***SDM*** Chapter 19 and ***PPM*** Vol. 1, Chapter 30, and include them in the plans. Use combinations of straight and corner piles to accommodate project specific geometric requirements.

Generally, Type “A” CFRP or HSSS strand prestressed piles are both acceptable in all environments and use is at the option of the Contractor unless project specific needs limit the type to only one prestressing strand material.

Show one Starter Pile location for a given wall. In the Elevation View, show the wall construction sequence proceeding away from the Starter Pile by locating the 11" by 11" corner clip on each Typical Pile on the side farthest away from the Starter Pile. Consider necessary tie-ins with adjacent structures and other boundary restrictions when selecting the Starter Pile location.

Prepare project specific cast-in-place concrete bulkhead cap, tie-back and utility accommodation details and include them in the plans. See Figure 1 for typical cap details. In the Materials Note on the General Notes Sheet, specify the concrete class for the cast-in-place cap in accordance with the retaining wall environment classification. See ***SDG*** 1.4.

Figure 1 Typical Cap Details

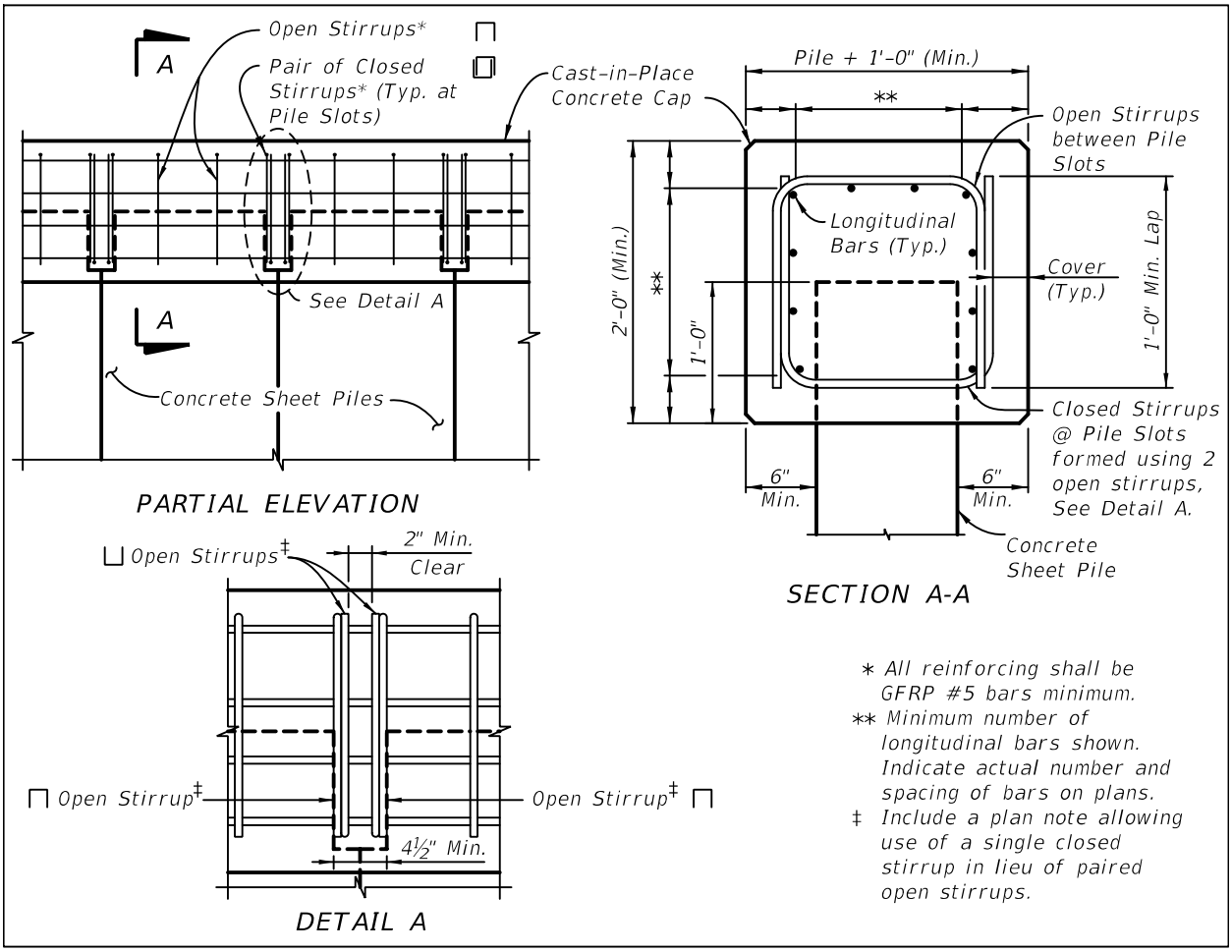

Complete the following "Concrete Sheet Pile Wall with Prestressed Soil Anchors Data Table", "Concrete Sheet Pile Wall with Dead Man Anchors Data Table" or "Concrete Sheet Pile Wall, Cantilever Data Table" as applicable and include it on the supplemental sheets. Complete the Notes and add/modify/delete as necessary. See Introduction I.3 for more information regarding use of Data Tables.

CONCRETE CFRP/GFRP & HSSS/GFRP SHEET PILE WALL WITH PRESTRESSED SOIL ANCHORS DATA TABLE																				Table Date 11-01-16
CONSTRUCTION INFORMATION																DESIGN PARAMETERS				
WALL LOCATION		WALL NO.	CONCRETE SHEET PILE FABRICATION						ANCHORS					MINIMUM WALL TIP ELEVATION (ft)	TOP OF WALL ELEV. (ft)	SOIL ELEVATION		WATER ELEVATION		FACTORED DESIGN SURCHARGE LOAD (psf)
STATION (begin to end)	OFFSET (ft)		TYPE (See Detail A)	NUMBER REQUIRED	PILE LENGTH L (ft)	PILE THICKNESS T (in)	GROOVE LENGTH X (ft)	CORNER ANGLE θ (degrees)	MAXIMUM ANCHOR SPACING (ft)	FACTORED ANCHOR LOAD (kips/ft)	SERVICE ANCHOR LOAD (kips/ft)	MINIMUM UNBONDED LENGTH (ft)	INSTALLATION ANGLE BELOW HORIZONTAL (degrees)			* FRONT OF WALL (ft)	BACK OF WALL (ft)	FRONT OF WALL (ft)	BACK OF WALL (ft)	

* Minimum of Design Ground Surface or Design Scour Depth.

NOTES:

1. Work the Data Table with Design Standards Index No. 22440 and Specification Section 451.
2. Factored Anchor Design Load (kips) = Factored Anchor Load (kips/ft) x Anchor Spacing (ft).
3. Environmental Classification is _____
4. Concrete for cast-in-place retaining wall caps shall be Class _____ (f'c = _____ psi), _____(with/without) silica fume, metakaolin or ultrafine fly ash.

CONCRETE CFRP/GFRP & HSSS/GFRP SHEET PILE WALL WITH DEAD MAN ANCHORS DATA TABLE																	Table Date 11-01-16
CONSTRUCTION INFORMATION													DESIGN PARAMETERS				
WALL LOCATION		WALL NO.	CONCRETE SHEET PILE FABRICATION						ANCHORS		MINIMUM WALL TIP ELEVATION (ft)	TOP OF WALL ELEV. (ft)	SOIL ELEVATION		WATER ELEVATION		FACTORED DESIGN SURCHARGE LOAD (psf)
STATION (begin to end)	OFFSET (ft)		TYPE (See Detail A)	NUMBER REQUIRED	PILE LENGTH L (ft)	PILE THICKNESS T (in)	GROOVE LENGTH X (ft)	CORNER ANGLE Ø (degrees)	ANCHOR BAR SPACING (ft)	ANCHOR BAR DIAMETER (in)			* FRONT OF WALL (ft)	BACK OF WALL (ft)	FRONT OF WALL (ft)	BACK OF WALL (ft)	

* Minimum of Design Ground Surface or Design Scour Depth.

NOTES:
1. Work the Data Table with Design Standards Index No. 22440.
2. Environmental Classification is _____
3. Concrete for cast-in-place retaining wall caps shall be Class _____ (f'c = _____ psi), _____(with/without) silica fume, metakaolin or ultrafine fly ash.

CONCRETE CFRP/GFRP & HSSS/GFRP SHEET PILE WALL, CANTILEVER DATA TABLE															Table Date 11-01-16
CONSTRUCTION INFORMATION											DESIGN PARAMETERS				
WALL LOCATION		WALL NO.	TYPE (See Detail A)	NUMBER REQUIRED	PILE LENGTH L (ft)	PILE THICKNESS T (in)	GROOVE LENGTH X (ft)	CORNER ANGLE Ø (degrees)	MINIMUM WALL TIP ELEVATION (ft)	WALL TOP ELEV. (ft)	SOIL ELEVATION		WATER ELEVATION		DESIGN LIVE LOAD (psf)
STATION (begin to end)	OFFSET (ft)										FRONT OF WALL (ft)	BACK OF WALL (ft)	FRONT OF WALL (ft)	BACK OF WALL (ft)	

NOTES:
1. Work the Data Table with Design Standards Index No. 22440.
2. Environmental Classification is _____
3. Concrete for cast-in-place retaining wall cap shall be Class _____ (f'c = _____ psi), _____ (with/without) silica fume, metakaolin or ultrafine fly ash.

Payment

Item number	Item description	Unit Measure
400-2-8	Concrete Class II, Bulkhead	CY
400-3-8	Concrete Class III, Bulkhead	CY
400-4-8	Concrete Class IV, Bulkhead	CY
914-415-AAA	Fiber Reinforced Polymer Bar	LF
451-70-AA	Prestressed Soil Anchor	EA
455-14-AA	Concrete Sheet Piling	LF
455-87	Anchor Bar, Steel	EA

Design Aids

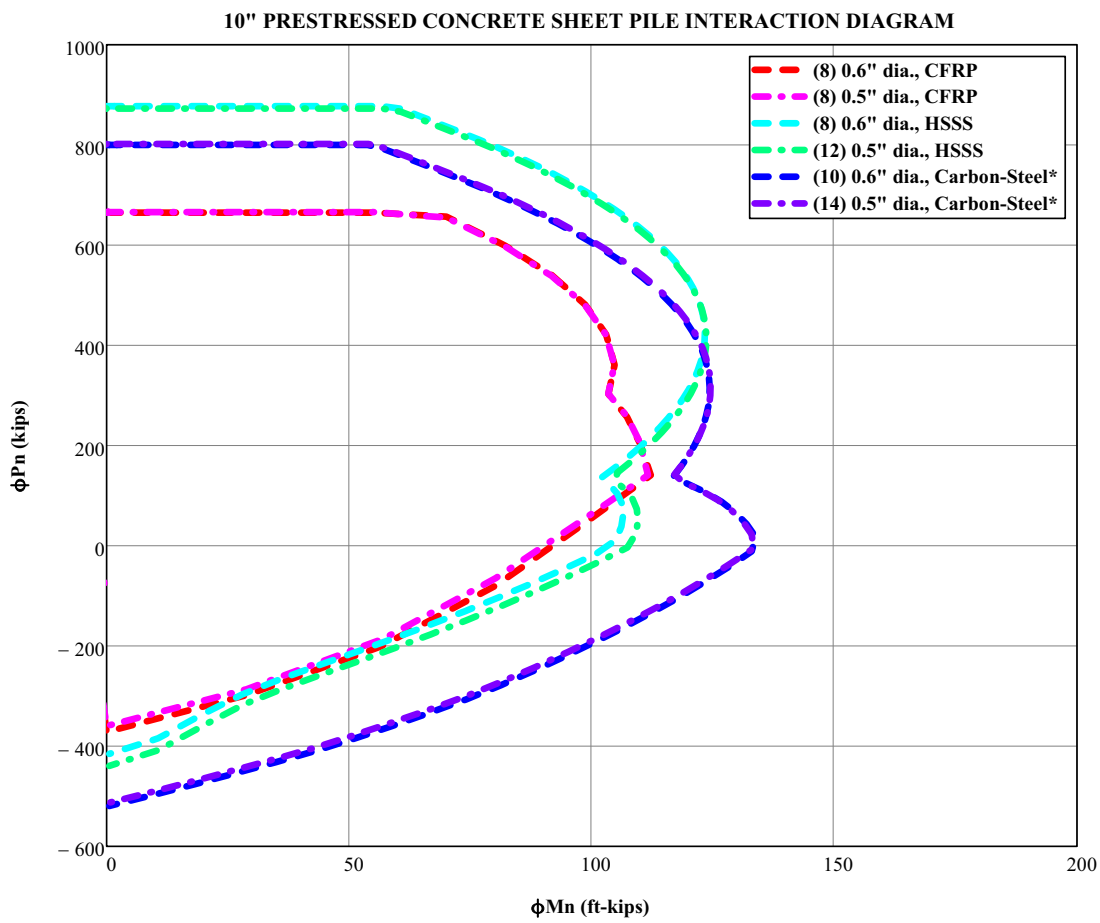

Design Assumptions:

- Concrete compressive strength $f'_c = 6$ ksi.
- Modulus of elasticity of prestressing strands, $E_p = 22{,}480$ ksi (0.6" CFRP), 23,500 ksi (HSSS) & 28,500 ksi (Carbon-Steel).
- Resistance factors ϕ based on ACI 440.4R for CFRP strands (0.65 compression-controlled, 0.85 tension-controlled); and AASHTO LRFD 5.5.4.2.1 for HSSS & Carbon-Steel strands (0.75 compression-controlled, 1.0 tension-controlled).

* The M-N Curve for Carbon-Steel, based on Index 6040, is shown for information purposes only.

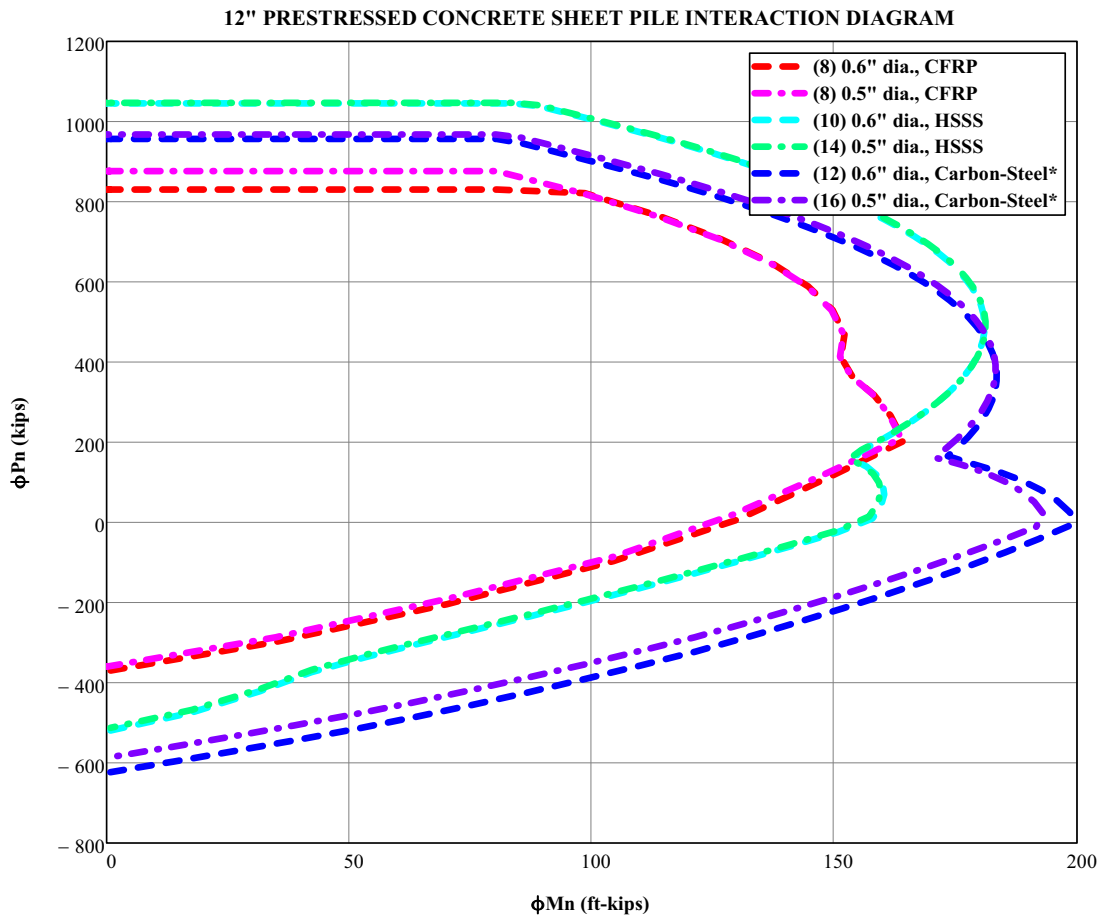

Design Assumptions:

- Concrete compressive strength $f'_c = 6$ ksi.
- Modulus of elasticity of prestressing strands, $E_p = 22{,}480$ ksi (0.6" CFRP), 23,500 ksi (HSSS) & 28,500 ksi (Carbon-Steel).
- Resistance factors ϕ based on ACI 440.4R for CFRP strands (0.65 compression-controlled, 0.85 tension-controlled); and AASHTO LRFD 5.5.4.2.1 for HSSS & Carbon-Steel strands (0.75 compression-controlled, 1.0 tension-controlled).

* The M-N Curve for Carbon-Steel, based on Index 6040, is shown for information purposes only.

Index 22600 Series Square CFRP & SS Prestressed Concrete Piles (Rev. 11/16)

Design Criteria

AASHTO LRFD Bridge Design Specifications; ***Structures Design Guidelines (SDG)***; ***Structures Detailing Manual (SDM)***; ***Fiber Reinforced Polymer Guidelines (FRPG)***

Design Assumptions and Limitations

Index 22600 is the lead standard for the Square CFRP & SS Prestressed Concrete Pile standard series which includes Indexes 22600 through 22630. Use this standard with Indexes 22601, 20602, 22612, 22614, 22618, 22624 and 22630.

Standard piles are designed to have 1000 psi uniform compression after prestress losses without any applied loads to offset tensile stresses that occur during typical driving.

The piles are designed to have 0.0 psi tension using a load factor of 1.5 times the pile self weight during pick-up, storage and transportation as shown in the "Table of Maximum Pile Pick-Up and Support Lengths" on the standard.

Plan Content Requirements

In the Structures Plans:

Show and label the piles on the Foundation Layout, End Bent, Intermediate Bent, Pier, Footing, Typical Section and other sheets as required.

Complete the following "Data Table" in accordance with ***SDG*** 3.5 and ***SDM*** 11.4 and include it in the contract plans with the "Foundation Layout" sheets. Modify table and notes as required to accommodate the required number of piles, piers and/or bents, use of Test Piles and instrumentation. When not enough space is available on one plan sheet, continuations of the Data Table and/or separate pile cut-off elevation tables are acceptable. See Introduction I.3 for more information regarding use of Data Tables.

For projects without Test Piles change data table column heading "TEST PILE LENGTH (ft.)" to "PILE ORDER LENGTH (ft.)".

PILE DATA TABLE																						Table Date 01/01/16
INSTALLATION CRITERIA								DESIGN CRITERIA								PILE CUT-OFF ELEVATIONS						
PIER or BENT NUMBER	PILE SIZE (in.)	NOMINAL BEARING RESISTANCE (tons)	NOMINAL UPLIFT RESISTANCE (tons)	MINIMUM TIP ELEVATION (ft.)	TEST PILE LENGTH (ft.)	REQUIRED JET ELEVATION (ft.)	REQUIRED PREFORM ELEVATION (ft.)	FACTORED DESIGN LOAD (tons)	FACTORED DESIGN UPLIFT LOAD (tons)	DOWN DRAG (tons)	TOTAL SCOUR RESISTANCE (tons)	NET SCOUR RESISTANCE (tons)	100-YEAR SCOUR ELEVATION (ft.)	Ø COMPRESSION	Ø UPLIFT	PILE 1	PILE 2	PILE 3	PILE 4	PILE 5	PILE 6	PILE 7

$$\frac{\text{Factored Design Load} + \text{Net Scour Resistance} + \text{Down Drag}}{\text{Ø}} \leq \text{Nominal Bearing Resistance}$$

UPLIFT RESISTANCE – The ultimate side friction capacity that must be obtained below the 100 year scour elevation to resist pullout of the pile (Specify only when design requires uplift capacity).

TOTAL SCOUR RESISTANCE – An estimate of the ultimate static side friction resistance provided by the scourable soil.

NET SCOUR RESISTANCE – An estimate of the ultimate static side friction resistance provided by the soil from the required preformed or jetting elevation to the scour elevation.

100-YEAR SCOUR ELEVATION – Estimated elevation of scour due to the 100 year storm event.

PILE INSTALLATION NOTES [Notes Date 7-01-13]:

Contractor to verify location of all utilities prior to any pile installation activities.

Minimum Tip Elevation is required for lateral stability.

When a required jetting elevation is shown, the jet shall be lowered to the elevation and continue to operate at this elevation until the pile driving is completed. If jetting or preforming elevations differ from those shown on the table, the Engineer shall be responsible for determination of the required driving resistance.

No jetting will be allowed without the approval of the Engineer.

The Contractor should not anticipate being allowed to jet piles below the 100-year scour elevation or required jet elevation, whichever is deeper.

At each Bent, pile driving is to commence at the center of the Bent and proceed outward.

Payment

Item number	Item description	Unit Measure
455-34-ABB	Prestressed Concrete Piling (CFRP or SS)	LF

Design Aids

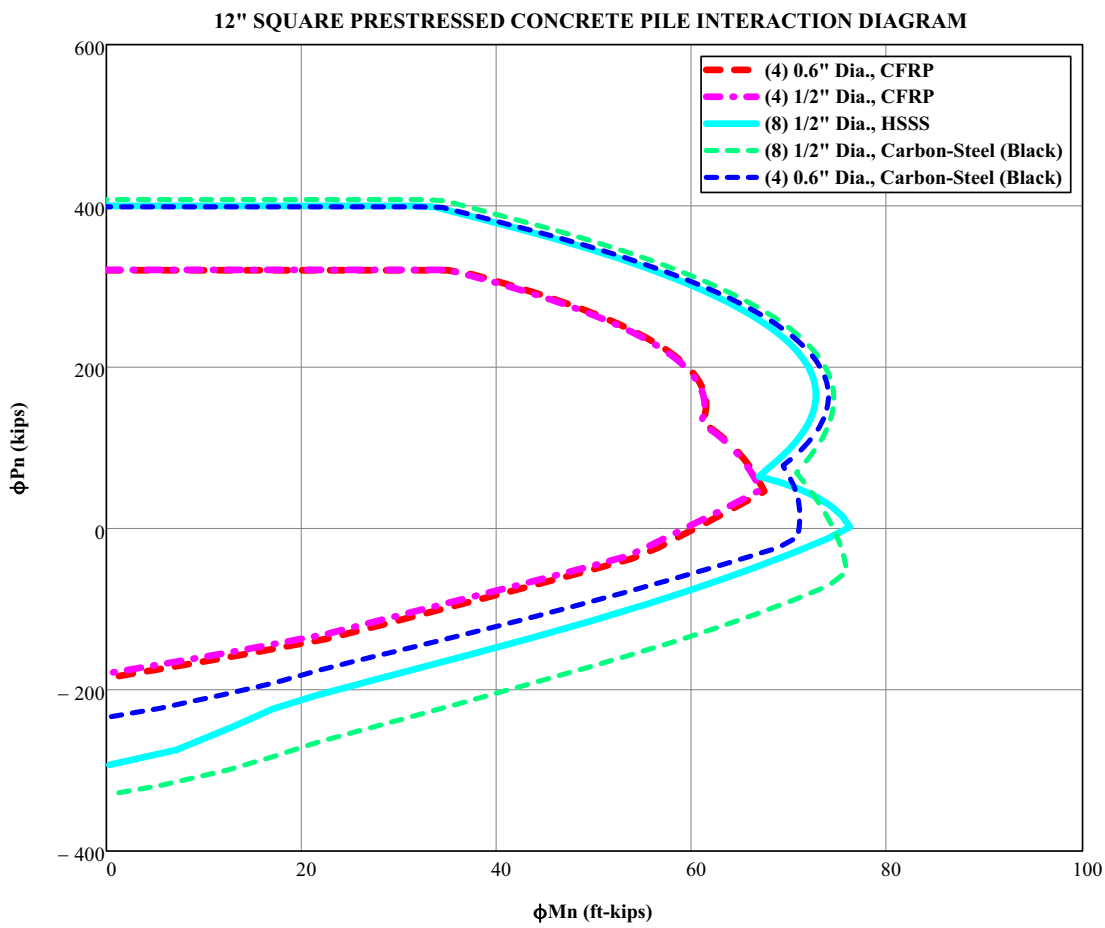

Design Assumptions:

- Concrete compressive strength $f'_c = 6$ ksi.
- Modulus of elasticity of prestressing strands, $E_p = 18{,}000$ ksi (1/2" CFRP), 22,480 ksi (0.6" CFRP), 23,500 ksi (HSSS) & 28,500 ksi (Carbon-Steel).
- Resistance factors ϕ based on ACI 440.4R for CFRP strands (0.65 compression-controlled, 0.85 tension-controlled); and AASHTO LRFD 5.5.4.2.1 for HSSS & Carbon-Steel strands (0.75 compression-controlled, 1.0 tension-controlled).
- All piles assumed to have spiral ties.
- Strand sizes and strand patterns used to create interaction curves correspond with those indicated in Index 22612 for CFRP & HSSS and Index 20612 for Carbon-Steel.

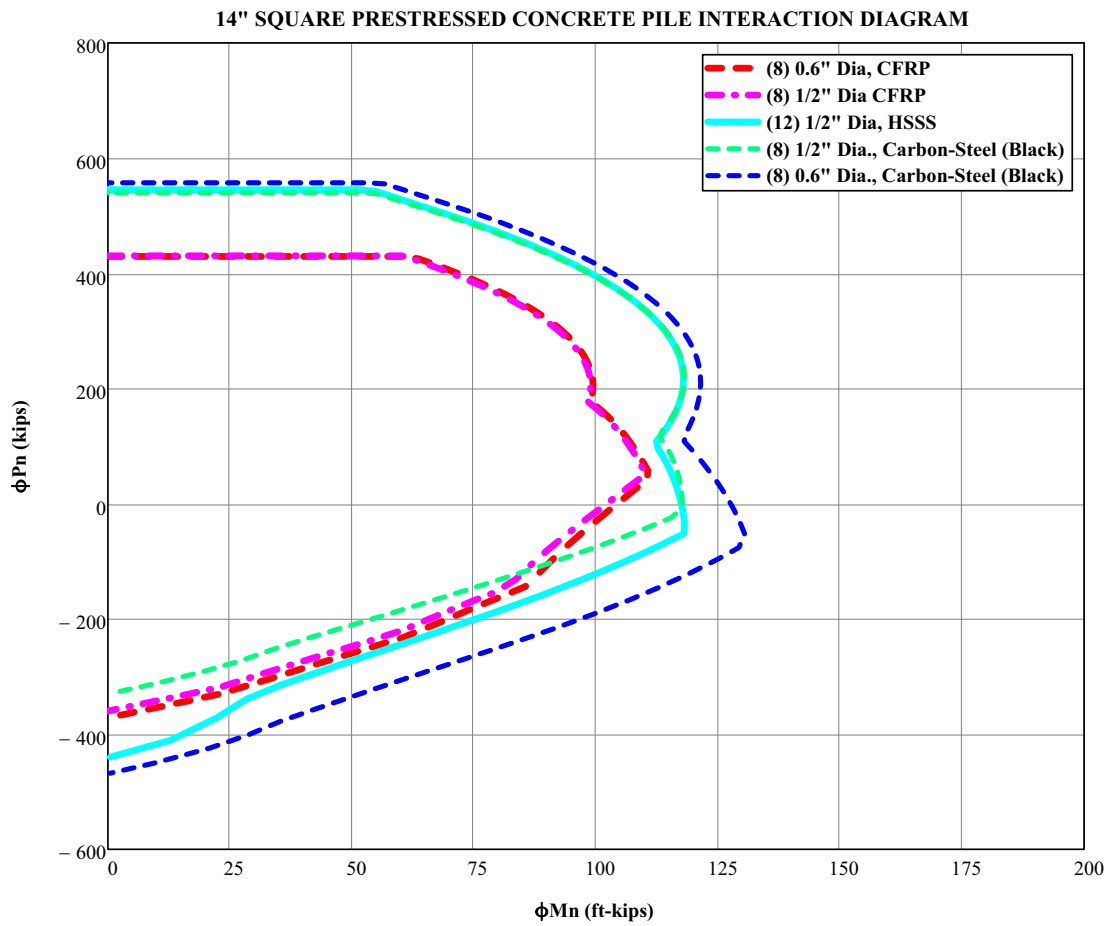

Design Assumptions:

- Concrete compressive strength $f'_c = 6$ ksi.
- Modulus of elasticity of prestressing strands, E_p = 18,000 ksi (1/2" CFRP), 22,480 ksi (0.6" CFRP), 23,500 ksi (HSSS) & 28,500 ksi (Carbon-Steel).
- Resistance factors ϕ based on ACI 440.4R for CFRP strands (0.65 compression-controlled, 0.85 tension-controlled); and AASHTO LRFD 5.5.4.2.1 for HSSS & Carbon-Steel strands (0.75 compression-controlled, 1.0 tension-controlled).
- All piles assumed to have spiral ties.
- Strand sizes and strand patterns used to create interaction curves correspond with those indicated in Index 22614 for CFRP & HSSS and Index 20614 for Carbon-Steel.

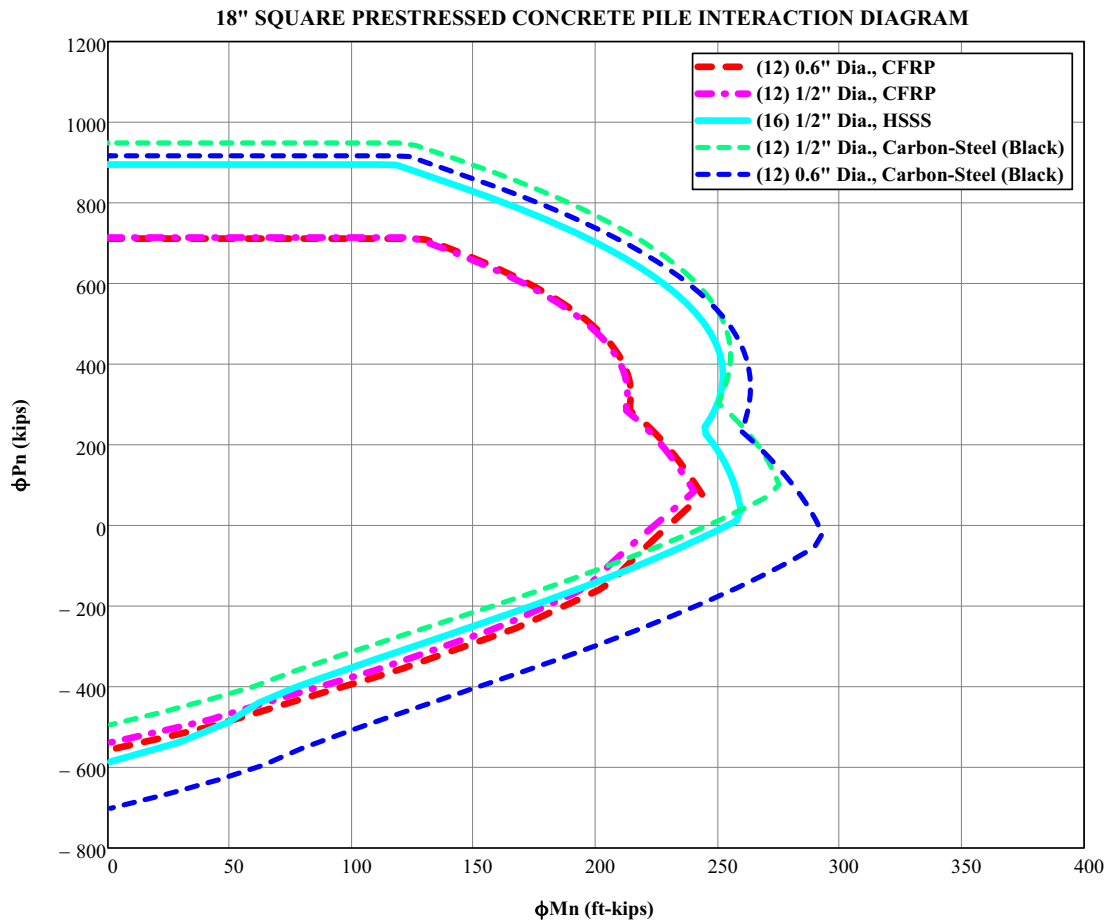

Design Assumptions:

- Concrete compressive strength $f'_c = 6$ ksi.
- Modulus of elasticity of prestressing strands, $E_p = 18{,}000$ ksi (1/2" CFRP), 22,480 ksi (0.6" CFRP), 23,500 ksi (HSSS), & 28,500 ksi (Carbon-Steel).
- Resistance factors ϕ based on ACI 440.4R for CFRP strands (0.65 compression-controlled, 0.85 tension-controlled); and AASHTO LRFD 5.5.4.2.1 for HSSS & Carbon-Steel strands (0.75 compression-controlled, 1.0 tension-controlled).
- All piles assumed to have spiral ties.
- Strand sizes and strand patterns used to create interaction curves correspond with those indicated in Index 22618 for CFRP & HSSS and Index 20618 for Carbon-Steel.

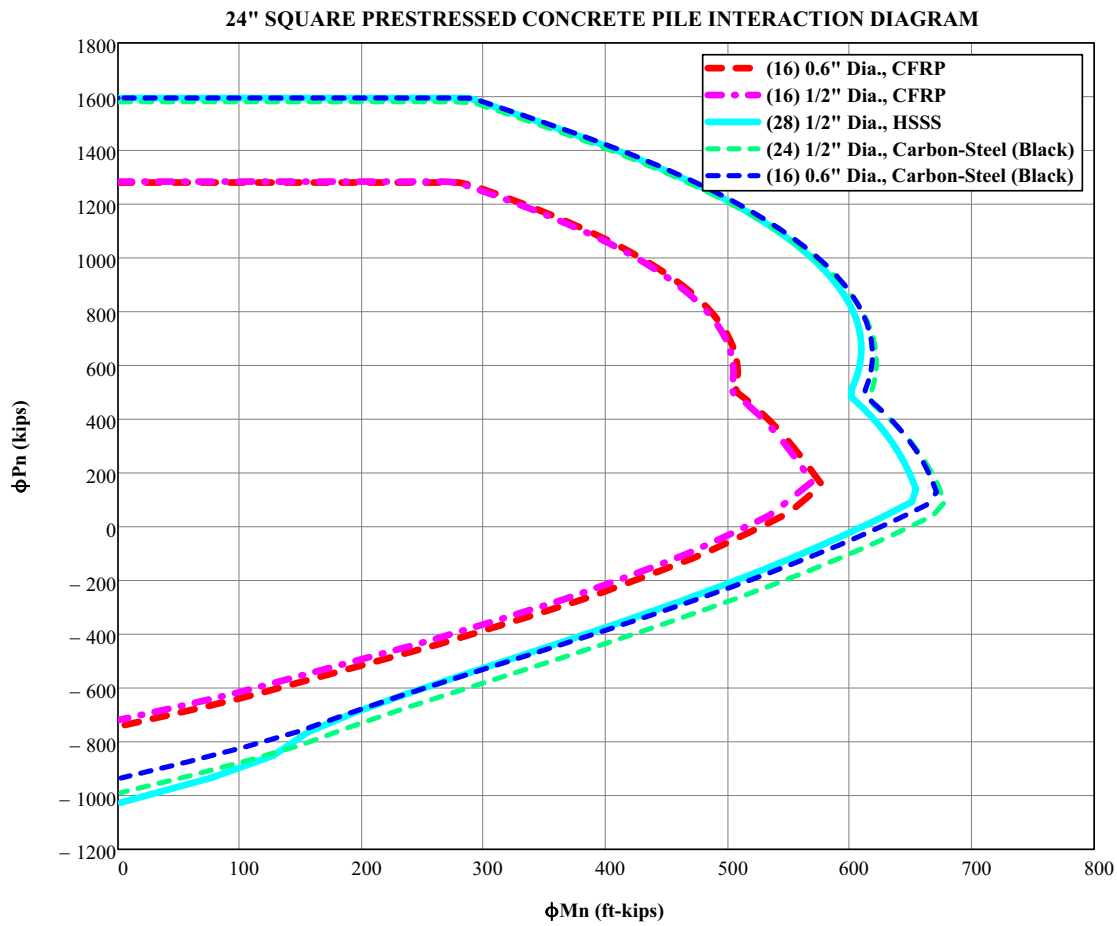

Design Assumptions:

- Concrete compressive strength $f'_c = 6$ ksi.
- Modulus of elasticity of prestressing strands, $E_p = 18{,}000$ ksi (1/2" CFRP), 22,480 ksi (0.6" CFRP), 23,500 ksi (HSSS), & 28,500 ksi (Carbon-Steel).
- Resistance factors ϕ based on ACI 440.4R for CFRP strands (0.65 compression-controlled, 0.85 tension-controlled); and AASHTO LRFD 5.5.4.2.1 for HSSS & Carbon-Steel strands (0.75 compression-controlled, 1.0 tension-controlled).
- All piles assumed to have spiral ties.
- Strand sizes and strand patterns used to create interaction curves correspond with those indicated in Index 22624 for CFRP & HSSS and Index 20624 for Carbon-Steel.

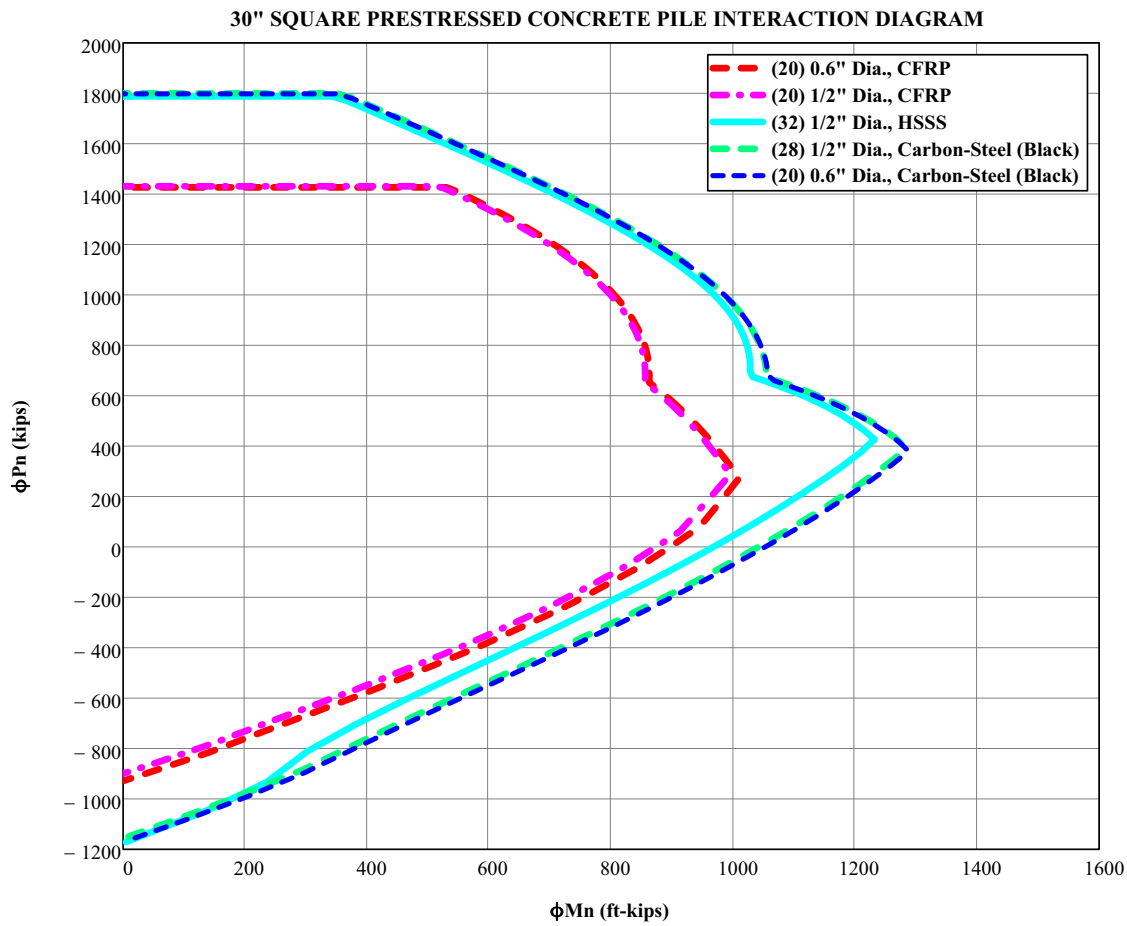

Design Assumptions:

- Concrete compressive strength $f'_c = 6$ ksi.
- Modulus of elasticity of prestressing strands, E_p = 18,000 ksi (1/2" CFRP), 22,480 ksi (0.6" CFRP), 23,500 ksi (HSSS), & 28,500 ksi (Carbon-Steel).
- Resistance factors ϕ based on ACI 440.4R for CFRP strands (0.65 compression-controlled, 0.85 tension-controlled); and AASHTO LRFD 5.5.4.2.1 for HSSS & Carbon-Steel strands (0.75 compression-controlled, 1.0 tension-controlled).
- All piles assumed to have spiral ties.
- Strand sizes and strand patterns used to create interaction curves correspond with those indicated in Index 22630 for CFRP & HSSS and Index 20630 for Carbon-Steel.

Index 22654 54" Prestressed / CFRP & SS Post-Tensioned Concrete Cylinder Pile (Rev. 11/16)

Design Criteria

AASHTO LRFD Bridge Design Specifications, 6th Edition; ***Structures Design Guidelines (SDG)***; ***Structures Detailing Manual (SDM)***; ***Fiber Reinforced Polymer Guidelines (FRPG)***

Design Assumptions and Limitations

Standard piles are designed to have 1000 psi uniform compression after prestress losses without any applied loads.

The piles are designed to have 0.0 psi tension using a load factor of 1.5 times the pile self weight during pick-up, storage and transportation as shown in the "Table of Maximum Pile Pick-Up and Support Lengths" on the standard.

Plan Content Requirements

In the Structures Plans:

Show and label the piles on the Foundation Layout, End Bent, Intermediate Bent, Pier, Footing, Typical Section and other sheets as required.

Complete the following "Data Table" in accordance with ***SDG*** 3.5 and ***SDM*** 11.4 and include it in the contract plans with the "Foundation Layout" sheets. Modify table and notes as required to accommodate the required number of piles, piers and/or bents and use of Test Piles. When not enough space is available on one plan sheet, continuations of the Data Table and/or separate pile cut-off elevation tables are acceptable. See Introduction I.3 for more information regarding use of Data Tables.

For projects without Test Piles change column heading "TEST PILE LENGTH (ft.)" to "PILE ORDER LENGTH (ft.)".

PILE DATA TABLE																						Table Date 01/01/16
INSTALLATION CRITERIA								DESIGN CRITERIA								PILE CUT-OFF ELEVATIONS						
PIER or BENT NUMBER	PILE SIZE (in.)	NOMINAL BEARING RESISTANCE (tons)	NOMINAL UPLIFT RESISTANCE (tons)	MINIMUM TIP ELEVATION (ft.)	TEST PILE LENGTH (ft.)	REQUIRED JET ELEVATION (ft.)	REQUIRED PREFORM ELEVATION (ft.)	FACTORED DESIGN LOAD (tons)	FACTORED DESIGN UPLIFT LOAD (tons)	DOWN DRAG (tons)	TOTAL SCOUR RESISTANCE (tons)	NET SCOUR RESISTANCE (tons)	100-YEAR SCOUR ELEVATION (ft.)	Ø COMPRESSION	Ø UPLIFT	PILE 1	PILE 2	PILE 3	PILE 4	PILE 5	PILE 6	PILE 7

$$\frac{\text{Factored Design Load} + \text{Net Scour Resistance} + \text{Down Drag}}{\text{Ø}} \leq \text{Nominal Bearing Resistance}$$

UPLIFT RESISTANCE – The ultimate side friction capacity that must be obtained below the 100 year scour elevation to resist pullout of the pile (Specify only when design requires uplift capacity).

TOTAL SCOUR RESISTANCE – An estimate of the ultimate static side friction resistance provided by the scourable soil.

NET SCOUR RESISTANCE – An estimate of the ultimate static side friction resistance provided by the soil from the required preformed or jetting elevation to the scour elevation.

100-YEAR SCOUR ELEVATION – Estimated elevation of scour due to the 100 year storm event.

PILE INSTALLATION NOTES [Notes Date 7-01-13]:

Contractor to verify location of all utilities prior to any pile installation activities.

Minimum Tip Elevation is required for lateral stability.

When a required jetting elevation is shown, the jet shall be lowered to the elevation and continue to operate at this elevation until the pile driving is completed. If jetting or preforming elevations differ from those shown on the table, the Engineer shall be responsible for determination of the required driving resistance.

No jetting will be allowed without the approval of the Engineer.

The Contractor should not anticipate being allowed to jet piles below the 100-year scour elevation or required jet elevation, whichever is deeper.

At each Bent, pile driving is to commence at the center of the Bent and proceed outward.

Payment

Item number	Item description	Unit Measure
455-36-AB	Concrete Cylinder Piles Furnished & Driven (54" Diameter CFRP or SS)	LF

Index 22660 60" CFRP & SS Prestressed Concrete Cylinder Pile (Rev. 11/16)

Design Criteria

AASHTO LRFD Bridge Design Specifications, 6th Edition; ***Structures Design Guidelines (SDG)***; ***Structures Detailing Manual (SDM)***; ***Fiber Reinforced Polymer Guidelines (FRPG)***

Design Assumptions and Limitations

Standard piles are designed to have 1000 psi uniform compression after prestress losses without any applied loads.

The piles are designed to have 0.0 psi tension using a load factor of 1.5 times the pile self weight during pick-up, storage and transportation as shown in the "Table of Maximum Pile Pick-Up and Support Lengths" on the standard.

Plan Content Requirements

In the Structures Plans:

Show and label the piles on the Foundation Layout, End Bent, Intermediate Bent, Pier, Footing, Typical Section and other sheets as required.

Complete the following "Data Table" in accordance with ***SDG*** 3.5 and ***SDM*** 11.4 and include it in the contract plans with the "Foundation Layout" sheets. Modify table and notes as required to accommodate the required number of piles, piers and/or bents and use of Test Piles. When not enough space is available on one plan sheet, continuations of the Data Table and/or separate pile cut-off elevation tables are acceptable. See Introduction I.3 for more information regarding use of Data Tables.

For projects without Test Piles change column heading "TEST PILE LENGTH (ft.)" to "PILE ORDER LENGTH (ft.)".

PILE DATA TABLE																						Table Date 01/01/16
INSTALLATION CRITERIA								DESIGN CRITERIA								PILE CUT-OFF ELEVATIONS						
PIER or BENT NUMBER	PILE SIZE (in.)	NOMINAL BEARING RESISTANCE (tons)	NOMINAL UPLIFT RESISTANCE (tons)	MINIMUM TIP ELEVATION (ft.)	TEST PILE LENGTH (ft.)	REQUIRED JET ELEVATION (ft.)	REQUIRED PREFORM ELEVATION (ft.)	FACTORED DESIGN LOAD (tons)	FACTORED DESIGN UPLIFT LOAD (tons)	DOWN DRAG (tons)	TOTAL SCOUR RESISTANCE (tons)	NET SCOUR RESISTANCE (tons)	100-YEAR SCOUR ELEVATION (ft.)	Ø COMPRESSION	Ø UPLIFT	PILE 1	PILE 2	PILE 3	PILE 4	PILE 5	PILE 6	PILE 7

$$\frac{\text{Factored Design Load + Net Scour Resistance + Down Drag}}{\text{Ø}} \leq \text{Nominal Bearing Resistance}$$

UPLIFT RESISTANCE – The ultimate side friction capacity that must be obtained below the 100 year scour elevation to resist pullout of the pile (Specify only when design requires uplift capacity).

TOTAL SCOUR RESISTANCE – An estimate of the ultimate static side friction resistance provided by the scourable soil.

NET SCOUR RESISTANCE – An estimate of the ultimate static side friction resistance provided by the soil from the required preformed or jetting elevation to the scour elevation.

100-YEAR SCOUR ELEVATION – Estimated elevation of scour due to the 100 year storm event.

PILE INSTALLATION NOTES [Notes Date 7-01-13]:

Contractor to verify location of all utilities prior to any pile installation activities.

Minimum Tip Elevation is required for lateral stability.

When a required jetting elevation is shown, the jet shall be lowered to the elevation and continue to operate at this elevation until the pile driving is completed. If jetting or preforming elevations differ from those shown on the table, the Engineer shall be responsible for determination of the required driving resistance.

No jetting will be allowed without the approval of the Engineer.

The Contractor should not anticipate being allowed to jet piles below the 100-year scour elevation or required jet elevation, whichever is deeper.

At each Bent, pile driving is to commence at the center of the Bent and proceed outward.

Payment

Item number	Item description	Unit Measure
455-36-AB	Concrete Cylinder Piles Furnished & Driven (60" Diameter CFRP or SS)	LF

IDS - REVISION HISTORY

Updated links from “www.dot.state.fl.us” to “www.fdot.gov” throughout the IDS.

Index 304 ..... Added directional criteria to determine when Option A or Option B of the Left Curb Ramp is to be used

Index 400 ..... Revised entire IDS per RDB 16-01 and DSR, with additional modifications noted with change bars.

Index 402 ..... Removed references to Detail J and updated drawings to avoid conflict with new Index 400.

Index 426 ..... New IDS.

Index 427 ..... New IDS.

Index 428 ..... New IDS.

Index 470 ..... Added Pay Item 110-3-6*, Removal of Existing Structures to PAYMENT table, and footnote "* As required per the Design Assumptions and Limitations".

Index 480 ..... Added Pay Item 110-3-6*, Removal of Existing Structures to PAYMENT table, and footnote "* As required per the Design Assumptions and Limitations".

Index 700 ..... Deleted.

Index 810 ..... Added Consideration for Approval of Alternative Technical Proposals section.

Index 811 ..... Added Consideration for Approval of Alternative Technical Proposals section.

Index 812 ..... Added Consideration for Approval of Alternative Technical Proposals section.

Index 852 ..... Revised handrail requirements to include locations where there are 3 or more steps and revised the clear opening height for the 4" Sphere Rule in Design Assumptions and Limitations; Added direction on modifications to Plans to meet the 4" Sphere Rule in Plan Content Requirements

Index 862 ..... Revised handrail requirements to include locations where there are 3 or more steps, changed Expansion Joint spacing from 30’ to 35’, and revised the clear opening height for the 4" Sphere Rule in Design Assumptions and Limitations; Added direction on modifications to Plans to meet the 4" Sphere Rule in Plan Content Requirements

Index 5200 ..... Revised wind load requirements in Design Criteria and Design Assumptions and Limitations.

Index 5211 ..... Clarified taper requirements in Plan Content and Requirements.

Index 5212 ..... Revised Pay Item number and description to match BOE.

Index 5250 ..... Revised Precast and Masonry Option Design Assumptions in Design Assumptions and Limitations.

Index 6011 ..... Changed Corrected SPT Blow Count description to "1.5 x base width" to match the LRFD 10.6.3.1.3-1 definition and updated the overall stability analysis guidelines in Design Assumptions and Limitations.

Index 6100 ..... Revised Pay Item Numbers and Descriptions to match BOE.

Index 11200 ..... Revised references to LRFDLTS-1 and Volume 3 in Design Criteria.

Index 11300 ..... Revised references to LRFDLTS-1 and Volume 3 in Design Criteria.

Index 11310 ..... Revised references to LRFDLTS-1 and Volume 3 in Design Criteria.

Index 11320 ..... Revised references to LRFDLTS-1 and Volume 3 in Design Criteria.

Index 11860 ..... Revised references to LRFDLTS-1 and Volume 3 in Design Criteria; Changed "saturated" to "submerged" in soil criteria unit weight description in Design Assumptions and Limitations.

Index 11861 ..... Revised references to LRFDLTS-1 and Volume 3 in Design Criteria; Updated Design Wind Speed in Design Assumptions and Limitations.

Index 11870 ..... Revised references to LRFDLTS-1 and Volume 3 in Design Criteria; Updated Design Wind Speed in Design Assumptions and Limitations.

Index 11871 ..... Revised references to LRFDLTS-1 and Volume 3 in Design Criteria; Updated Design Wind Speed in Design Assumptions and Limitations.

Index 17502 ..... Revised references to LRFDLTS-1 and Volume 3 in Design Criteria; Deleted ground slope requirements and table from Design Assumptions and Limitations.

Index 17505 ..... Revised references to LRFDLTS-1 and Volume 3 in Design Criteria; Updated Design Wind Speed in Design Assumptions and Limitations.

Index 17515 ..... Revised references to LRFDLTS-1 and Volume 3 in Design Criteria; Deleted Importance Factor and added 30’ and 35’ Design Mounting Heights to Design Assumptions and Limitations.

Index 17723 ..... Revised references to LRFDLTS-1 and Volume 3 in Design Criteria; Changed "saturated" to "submerged" in soil criteria unit weight description in Design Assumptions and Limitations.

Index 17725 ..... Revised references to LRFDLTS-1 and Volume 3 in Design Criteria; Changed "Final Grade" to "Finish Grade" in Tables in Design Assumptions and Limitations; Revised definition of Ø M_n in footnote of Table 17725-2.

Index 17743 ..... Revised references to LRFDLTS-1 and Volume 3 in Design Criteria; Extensively revised Design Assumptions and Limitations; Revised handhole location from "180" to "90" degrees in #11, deleted #12 and renumbered subsequent paragraphs in instructions section of Plan Content Requirements; Revised Examples; Added new Design Aids.

Index 17745 ..... Revised references to LRFDLTS-1 and Volume 3 in Design Criteria; Revised handhole location from "180" to "90" degrees in #11 of instructions for use with Mast Arm Tabulation Sheets in Plan Content Requirements.

Index 18111 ..... Revised references to LRFDLTS-1 and Volume 3 in Design Criteria; Revised wind speed design requirements #1 in Design Assumptions and Limitations.

Index 18113 ..... Revised references to LRFDLTS-1 and Volume 3 in Design Criteria; Revised wind speed design requirements #1 in Design Assumptions and Limitations.

Index 20010 ..... Removed reference to deleted Index 20005 from Design Assumptions and Limitations.

Index 20120 ..... Removed reference to deleted Index 20005 from Design Assumptions and Limitations.

Index 20600 ..... Revised Pay Item Number to match BOE.

Index 20654 ..... Revised Pay Item Number to match BOE.

Index 20660 ..... Revised Pay Item Number to match BOE.

Index 20900 ..... Revised Data Table.

Index 20910 ..... Clarified payment for raised sidewalks on the approach slab in Plan Content Requirements; Revised Data Table.

Index 21200 ..... Added references to Indexes 427 and 428; Revised wind speed to 170 mph.

Index 21210 ..... Revised and clarified Plan Content Requirements.

Index 21220 ..... Removed cross reference to Index 21900 in Design Assumptions and Limitations.

Index 21800 ..... Revised based on SDB 16-07 and associated DSR; Added requirements and details for tendon mockups to be included in the plan set.

Index 22440 ..... New IDS.

Index 22600 ..... Revised Pay Item Number to match BOE; Updated Pile Interaction Diagrams in Design Aids.

Index 22654 ..... Revised Pay Item Number to match BOE.

Index 22660 ..... Revised Pay Item Number to match BOE.