GENERAL NOTES:

1. Verify Column lengths in the field prior to fabrication.

2. Shop drawings:

A. Column/Sign Posts: Sign Support Shop drawings are not required when fabricated in accordance with this Index and support posts do not exceed the length shown in the plans by more than 2'-0".

B. Sign Panels: Horizontal panel splices are allowed at interior wind beams for sign panels with a depth ("D") greater than 10 feet. Shop drawings required for panel splice details.

C. When shop drawings are required; obtain approval prior to fabrication.

3. Materials:

A. Sign Panel Mounting Materials:
   a. Aluminum Bars, and Extruded Shapes: ASTM B221, Alloy 6061-T6 or Alloy 6351-T5
   b. Aluminum Structural Shapes: ASTM B308, Alloy 6061-T6
B. Sign Support Structure Materials:
   a. Steel Plates and Structural Shapes: ASTM A36 or ASTM A709, Grade 36
   b. Steel Weld Metal: E70XX
   c. Brass Shims: ASTM B36
C. Aluminum Bolts, Nuts and Washers:
   a. Flat Head Machine Screws (bolts): ASTM F 468, Alloy 2024-T4
   b. Hex Nuts: ASTM F467, Alloy 6061-T6 or 6262-T9
   c. Washers: ASTM B221, Alloy 7075-T6
D. Stainless Steel Bolts, Nuts and Washers Alloy Group 2, Condition A, may be substituted for the Aluminum bolts and screws as follows:
   a. Bolts: ASTM F593, CW1 or SH1
   b. Nuts: ASTM F594,
E. High Strength (H.S.) Steel Bolts, Nuts and Washers:
   a. Galvanized Hex Head Bolts: ASTM A325, Type 1
   b. Galvanized Nuts: ASTM A563 Hex, Grade DH
   c. Galvanized Washers: ASTM F436
F. Concrete: Class I.
G. Reinforcing Bars or Welded Wire Reinforcement (WWR): Specification Section 415

4. Coatings:

A. Aluminum Fasteners: Anodic coating (0.0002 inches min.) and chromate sealed
B. Galvanize High Strength Steel Bolts Nuts and Washers: ASTM F2329
C. Galvanize all other steel items (excluding stainless steel): Hot-dip ASTM A123
D. Treat damaged galvanizing in accordance with Specification Section 562

5. Fabrication:

A. All Base Connections and Stub Column materials are steel unless otherwise specified.
B. Drill or sub-punch and ream holes in Fuse Plates and Hinge Plates
C. Weld Base Plate to Stub & Post or if using the Alternate Connection Detail weld Base Plate and Stiffeners to Post and Stub (Sheet 2)
D. Hot dip galvanize after fabrication; Remove all drips, runs or beads on baseplate within washer contact areas

6. Construction:

A. Install the Sign Structure foundation in accordance with Specification Section 455. Orient Stub Post according to direction of traffic (Sheet 2)
B. Tighten all high strength bolts except Base Bolts in accordance with Specification Section 700. Tighten Base Bolts in accordance with Instruction Notes on Sheet 2.
C. Assemble Post to Stub with Base Bolts and three flat washers per bolt (Base Connection Detail Sheet 2).

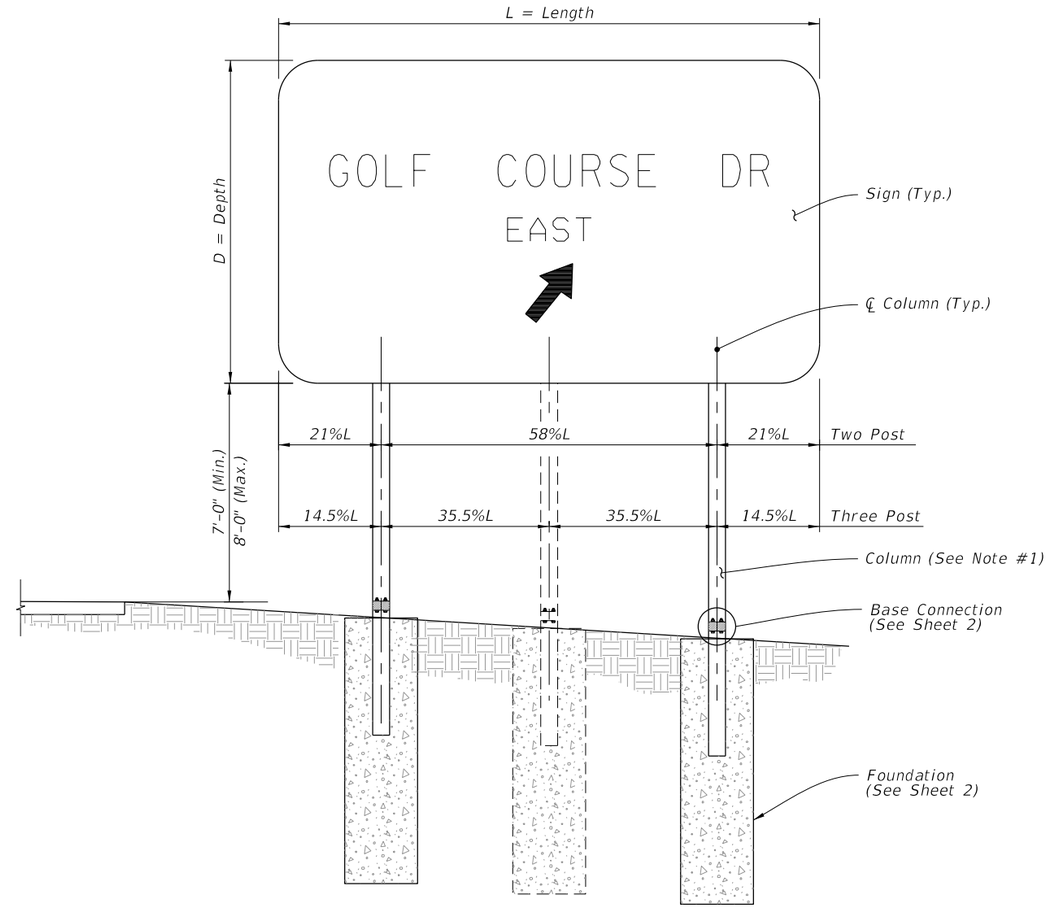

FRONT ELEVATION

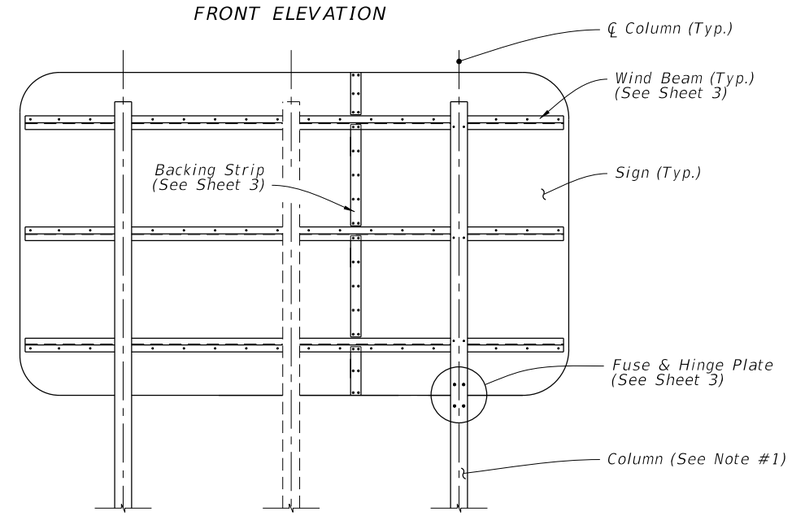

BACK ELEVATION

MULTI-COLUMN SIGN ASSEMBLY

12/3/2015 11:43:52 AM

LAST REVISION	REVISION	DESCRIPTION:	FDOT FY 2016-17 DESIGN STANDARDS	MULTI-COLUMN GROUND SIGN	INDEX NO.	SHEET NO.
01/01/16					11200	1 of 3

FOUNDATION DATA					BASE CONNECTION DATA									SHIM	
Section*	Dia.	Depth	Stub Column Length	Reinf. Bars V	A	B	C	D	R	t_1	L_2	W_1	Torque (lbf*in)	L	M
S 3x5.7	2'-0"	4'-0"	3'-0"	10-#6	4"	7"	3/4"	2"	5/16"	1"	1/2"	1/4"	90 ± 20	1-1/4"	9/16"
W 6x12	2'-0"	6'-0"	3'-0"	10-#6	4"	10"	3/4"	2"	3/8"	1-5/8"	5/8"	1/4"	270 ± 45	1-3/8"	11/16"
W 8x18	2'-4"	7'-6"	4'-0"	8-#8	5-1/4"	12-1/2"	7/8"	2-3/4"	7/16"	1-3/4"	3/4"	3/8"	445 ± 75	1-3/4"	13/16"
W 8x24	2'-4"	8'-6"	4'-0"	8-#8	6-1/2"	12-1/2"	7/8"	3-1/4"	7/16"	1-3/4"	3/4"	3/8"	445 ± 75	2-1/8"	13/16"
W 10x33	2'-4"	10'-3"	4'-0"	8-#8	8"	16"	1-1/4"	4-3/4"	9/16"	2"	1"	1/2"	580 ± 90	2-3/8"	1-1/16"
W 12x45	2'-8"	11'-3"	5'-0"	10-#8	10"	18"	1-1/4"	6"	9/16"	2"	1"	1/2"	580 ± 90	2-3/4"	1-1/16"

* Designations: (Normal Depth in inches) x (weight in pounds per linear foot).

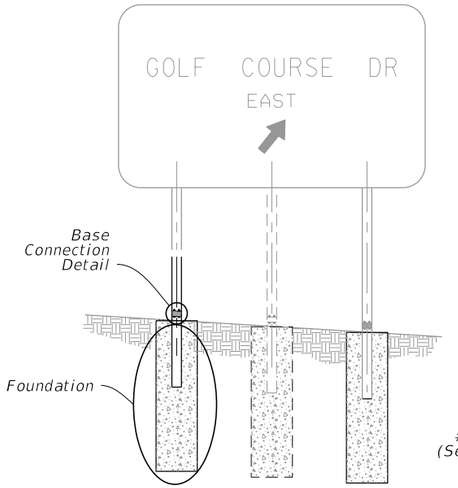

MULTI-COLUMN SIGN ASSEMBLY

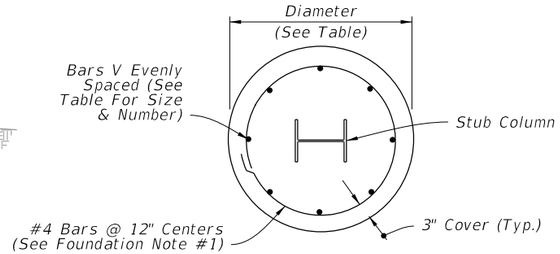

PLAN

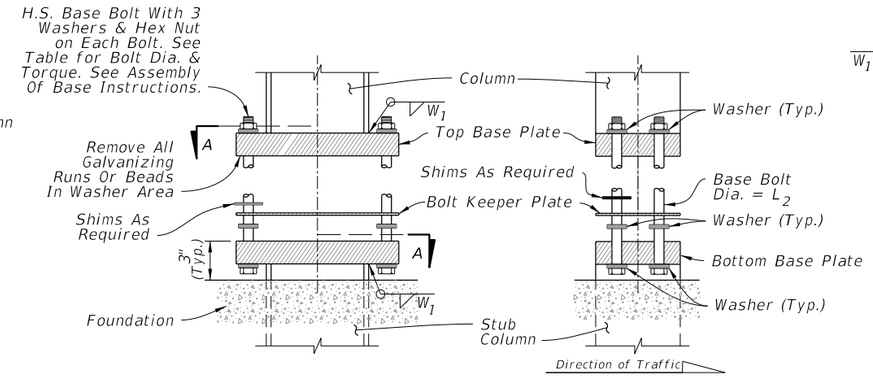

SIDE ELEVATION

FRONT ELEVATION

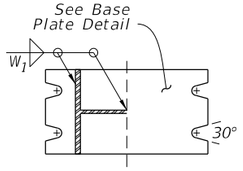

SECTION A-A

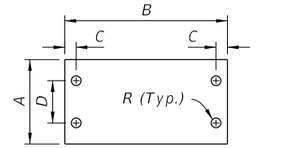

Plate Thickness=0.0149" (28 Guage)

BOLT KEEPER PLATE DETAIL

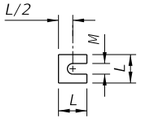

See Instructions Note #1B

SHIM DETAIL (Brass)

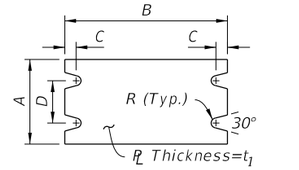

BASE PLATE DETAIL

BASE CONNECTION

FOUNDATION NOTES:

1. At the Contractors option, the #4 tie bars at 12" o.c. may be replaced by D10 Spiral Wire @ 6" pitch, with three flat turns at the top and one flat turn at the bottom in accordance with Specification Section 415.

2. The Contractor may use Welded Wire Reinforcement (WWR) for foundation reinforcing.

INSTRUCTIONS NOTES:

1. Assembly of Base Instructions:

   A. Place one washer on each Base Bolt between the Bottom Base Plate and the head of high strength Base Bolt; place the next washer between the Bottom Base Plate and the Bolt Keeper Plate; add the Top Base Plate section and place the third washer between the Top Base Plate and the Nut.

   B. Shim as required to plumb column. Provide 2-0.0149" thick (28 gauge) and 2-0.0329" thick (21 gauge) brass shims per column.

2. H.S. Base Bolt L_2 Tightening Instructions:

   A. Tighten Base Bolts to the maximum possible with a 12" to 15" wrench (this will bed the washers and shims and clear the bolt threads).

   B. Loosen each Base Bolt one turn.

   C. Under the supervision of the Engineer, use a calibrated wrench to tighten bolts to the torque prescribed in the Table. Over tightened Base Bolts will not be permitted.

   D. Burr threads at junction with nut to prevent nut loosening. Treat damaged galvanizing.

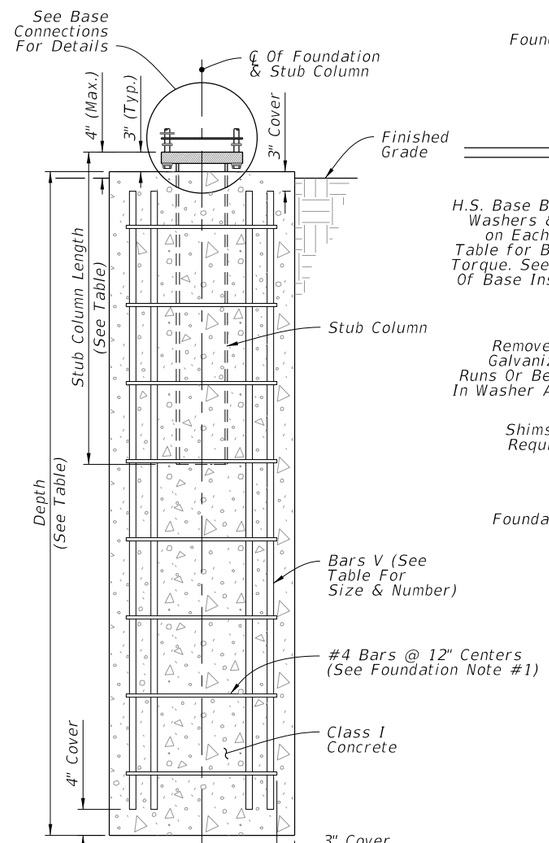

ELEVATION

FOUNDATION

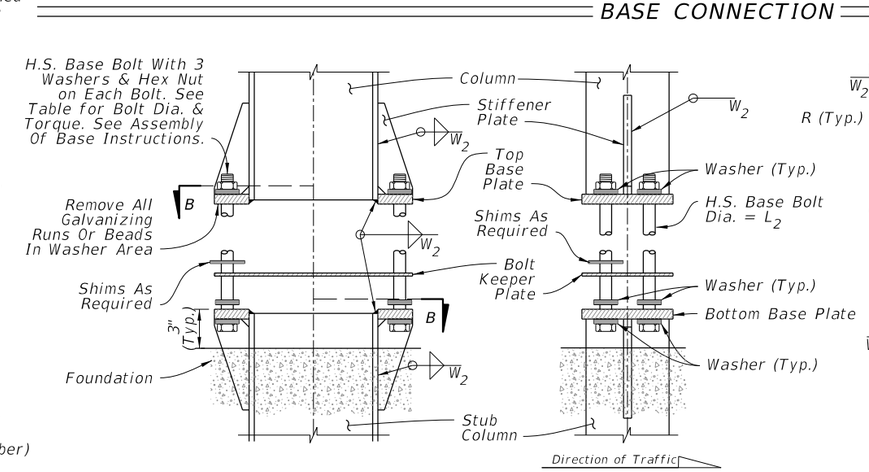

SIDE ELEVATION

FRONT ELEVATION

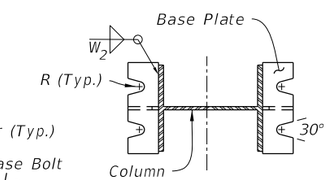

SECTION B-B

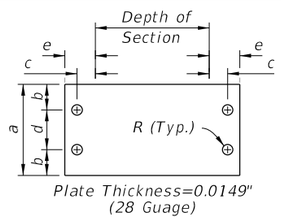

Plate Thickness=0.0149" (28 Guage)

BOLT KEEPER PLATE DETAIL

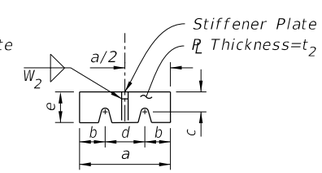

BASE PLATE DETAIL

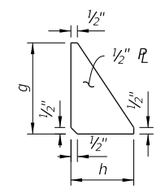

STIFFENER PLATE DETAIL

ALTERNATIVE BASE CONNECTION

ALTERNATIVE BASE CONNECTION DATA												
Section*	a	b	c	d	e	t_2	L_2	Torque (lbf*in)	R	g	h	W_2
W 6x12	4-3/4"	1-1/8"	1-3/16"	2-1/2"	2"	1/2"	5/8"	270± 45	3/8"	5-1/8"	2"	1/4"
W 8x18	5-3/4"	1-1/2"	1-3/8"	2-3/4"	2-3/16"	5/8"	3/4"	445± 75	7/16"	6-1/4"	2-3/16"	1/4"
W 8x24	7"	1-3/4"	1-3/8"	3-1/2"	2-3/8"	3/4"	3/4"	445± 75	7/16"	8"	2-3/8"	5/16"
W 10x33	8"	2"	1-9/16"	4"	2-3/4"	3/4"	1"	580± 90	9/16"	8"	2-3/4"	5/16"
W 12x45	8"	2"	1-9/16"	4"	3"	3/4"	1"	580± 90	9/16"	8"	3"	5/16"

* Designations: (Normal Depth in inches) x (weight in pounds per linear foot).

FOUNDATION AND BASE CONNECTION DETAILS

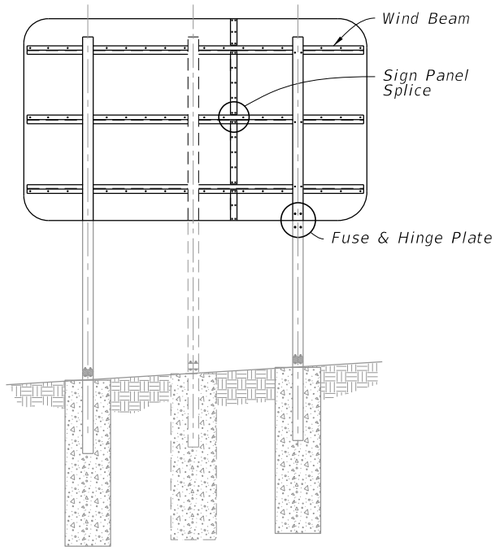

BACK ELEVATION

MULTI-COLUMN SIGN ASSEMBLY

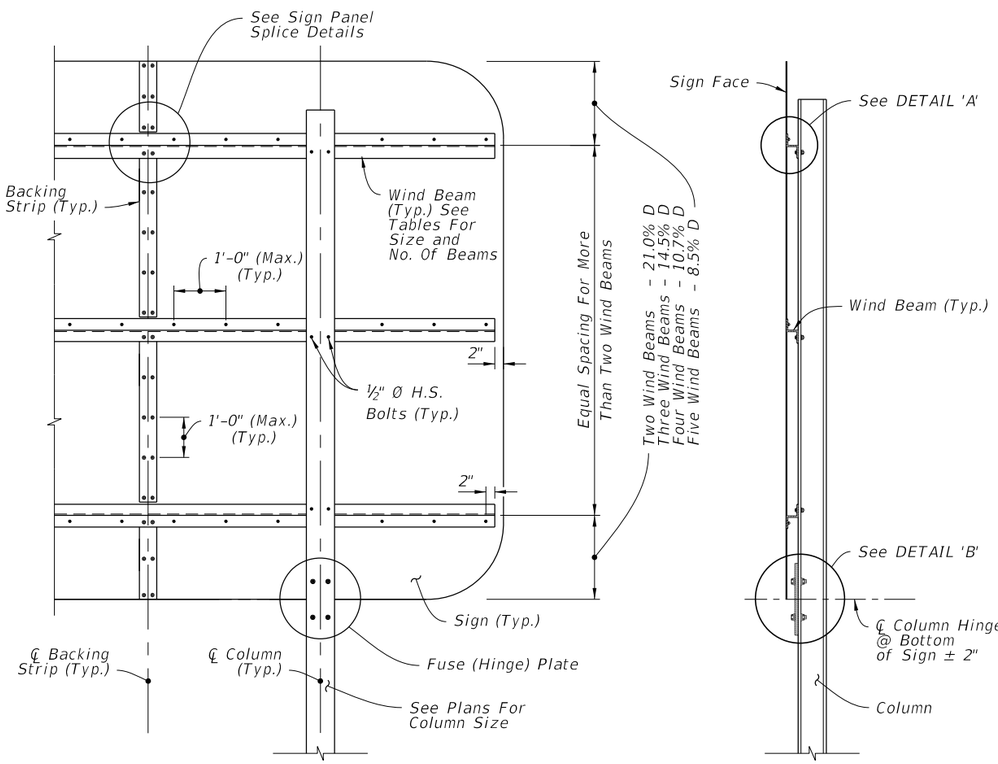

BACK ELEVATION SIDE ELEVATION

MULTI-COLUMN SIGN BACK PANEL

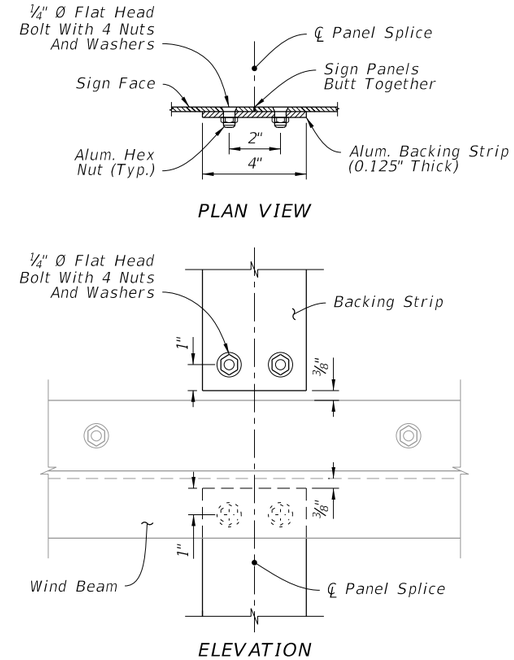

PLAN VIEW

ELEVATION

SIGN PANEL SPLICE

NUMBER OF WIND BEAMS FOR GIVEN DEPTH & WIND SPEED

Wind	No. Beams	Max. Depth	Wind	No. Beams	Max. Depth
110	2	7'-0"	150	2	6'-0"
110	3	12'-0"	150	3	10'-4"
110	4	16'-4"	150	4	14'-0"
110	5	20'-8"	150	5	17'-8"
130	2	6'-8"			
130	3	11'-4"			
130	4	15'-4"			
130	5	19'-0"			

SIZE OF WIND BEAMS

Size Of Zee**	Length Of Sign (Feet)	
	2 Posts	3 Posts
Zee 1¾" x 1¾" x 1.09	0 to 11'-0"	0 to 17'-4"
Zee 3 x 2 11/16" x 2.33	11'-1" to 19'-0"	17'-5" to 29'-6"
Zee 3 x 2 11/16" x 3.38	19'-1" to 20'-8"	29'-7" to 31'-6"

** Zee Beams are aluminum. No steel equivalent available
Designation gives (Member Depth) x (Flange Width) x (lb/ft)

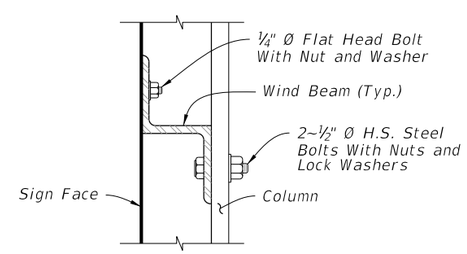

DETAIL 'A'

FUSE (HINGE) PLATE DATA

Section*	a	b	c	d	e	t_2	D_1	D_2	L_1
S 3x5.7	7-1/4"	2-3/8"	1-1/4"	1/2"	9/16"	3/8"	7/16"	9/16"	1/2"
W 6x12	7-1/4"	4"	1-1/4"	7/8"	15/16"	3/8"	13/16"	11/16"	5/8"
W 8x18	8-1/4"	5-1/4"	1-3/8"	1-1/8"	1-1/4"	3/8"	1"	13/16"	3/4"
W 8x24	8-1/4"	6-1/2"	1-3/8"	1-1/2"	1-1/2"	1/2"	1"	13/16"	3/4"
W 10x33	9-1/4"	8"	2"	1-3/4"	1-3/4"	5/8"	1-1/8"	1-1/16"	1"
W 12x45	11"	8"	2"	1-3/4"	1-3/4"	3/4"	1-5/16"	1-1/16"	1"

* Designations: Normal Depth in inches.

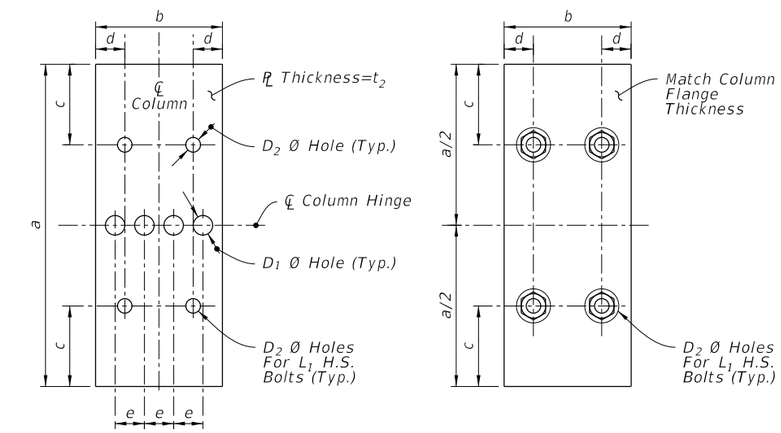

FUSE PLATE HINGE PLATE

FUSE & HINGE PLATE

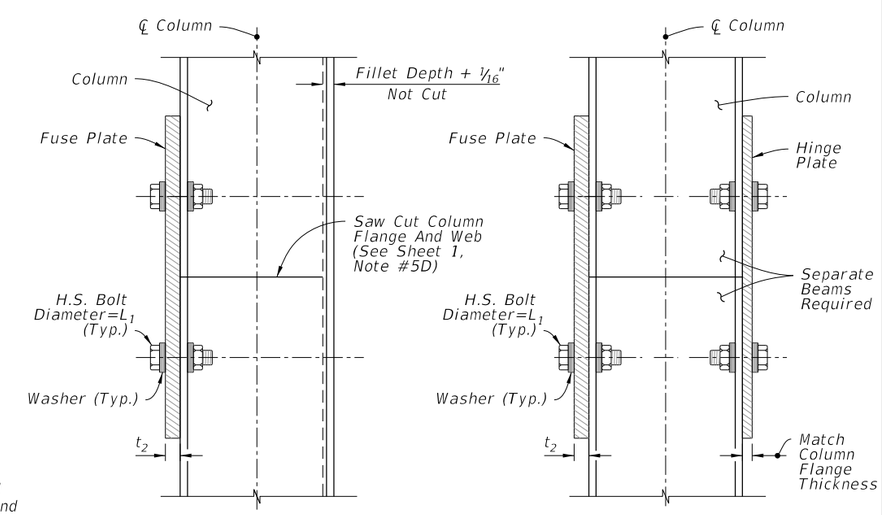

Side Elevation TYPICAL HINGE

Side Elevation OPTIONAL HINGE

(See Fabrication Notes on Sheet 1)

DETAIL 'B'

WIND BEAM, BACKING STRIP & FUSE/HINGE PLATE DETAILS

12/9/2015 11:01:13 AM

LAST REVISION	REVISION	DESCRIPTION:	FY 2016-17 DESIGN STANDARDS	MULTI-COLUMN GROUND SIGN	INDEX NO.	SHEET NO.
01/01/16					11200	3 of 3

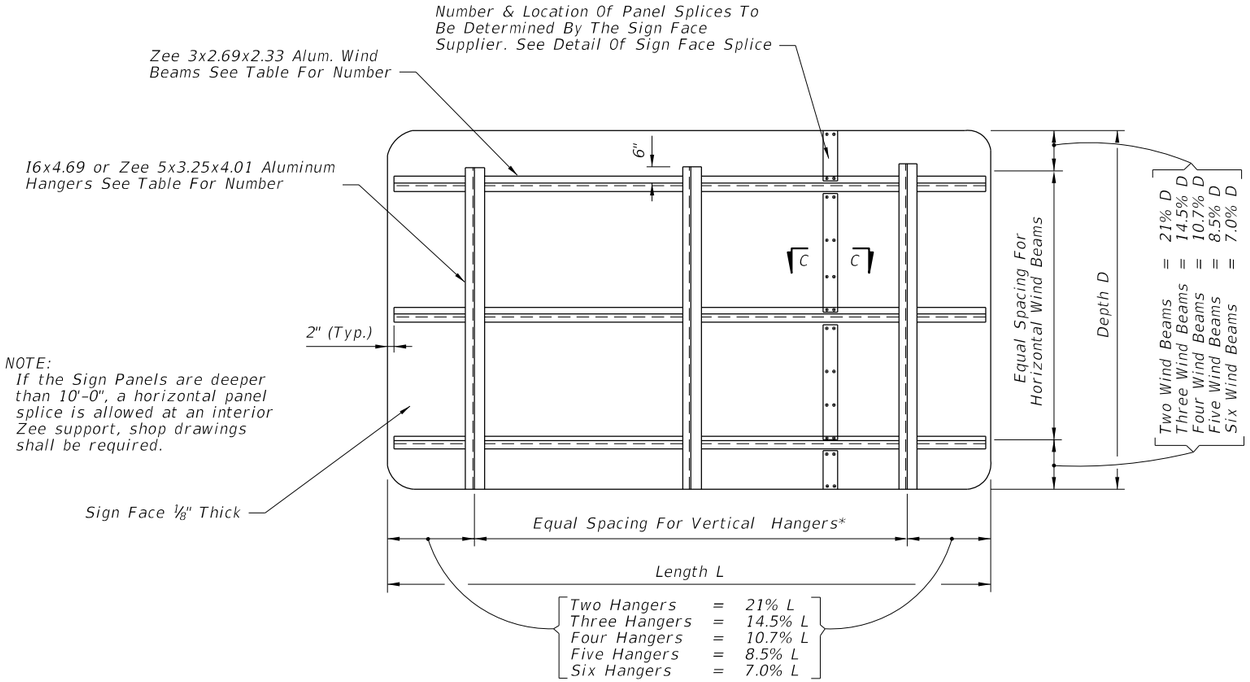

*Note: Spacing of vertical hangers may be varied slightly or as necessary to clear the truss struts and diagonals at panel points.

TYPICAL SIGN FACE ELEVATION FOR OVERHEAD TRUSS

Number Of Zee 3x2.69x2.33 Horiz. Wind Beams For Sign Depth And Wind			Number Of I6x4.69 or Zee 5x3.25x4.01 Vertical Hanger Beams For Sign Length				
Wind M.P.H.	No. Beams	Max. Depth	2 Hangers	3 Hangers	4 Hangers	5 Hangers	6 Hangers
			Max Length	Max Length	Max Length	Max Length	Max Length
150	2	5'	15'	30'	45'	X	X
150	3	9'	15'	30'	45'	X	X
150	4	12'	15'	22'	30'	38'	45'
150	5	15'	15'	22'	30'	38'	45'
150	6	18'	15'	22'	30'	38'	45'
130	2	5'	15'	30'	45'	X	X
130	3	9'	15'	30'	45'	X	X
130	4	12'	15'	22'	30'	38'	45'
130	5	15'	15'	22'	30'	38'	45'
130	6	18'	15'	22'	30'	38'	45'
110	2	5'	15'	30'	45'	X	X
110	3	9'	15'	30'	45'	X	X
110	4	12'	15'	30'	38'	45'	X
110	5	15'	15'	30'	38'	45'	X
110	6	18'	15'	30'	38'	45'	X

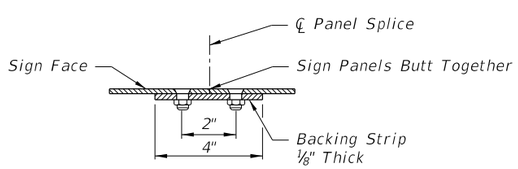

SECTION C-C

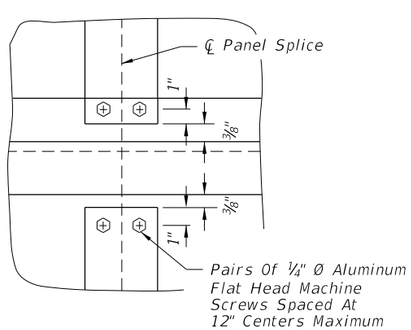

BACKING STRIP DETAIL

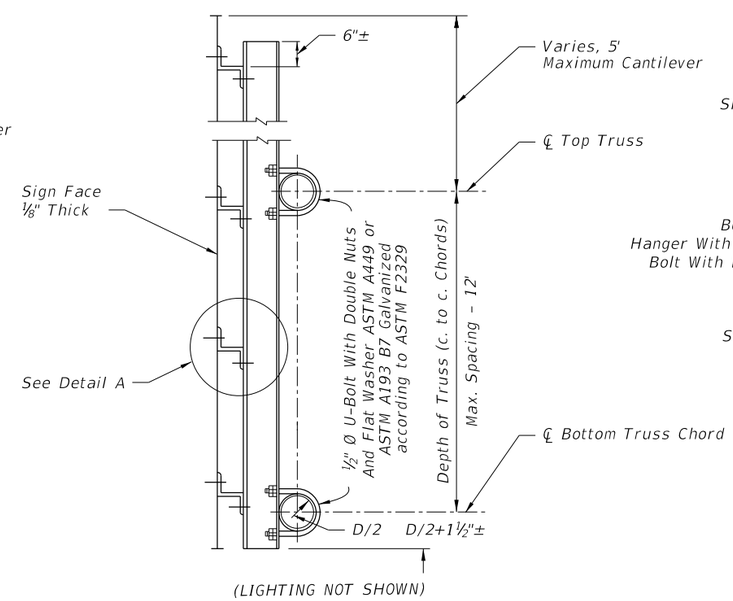

TYPICAL DETAIL OF SIGN & TRUSS CONNECTION

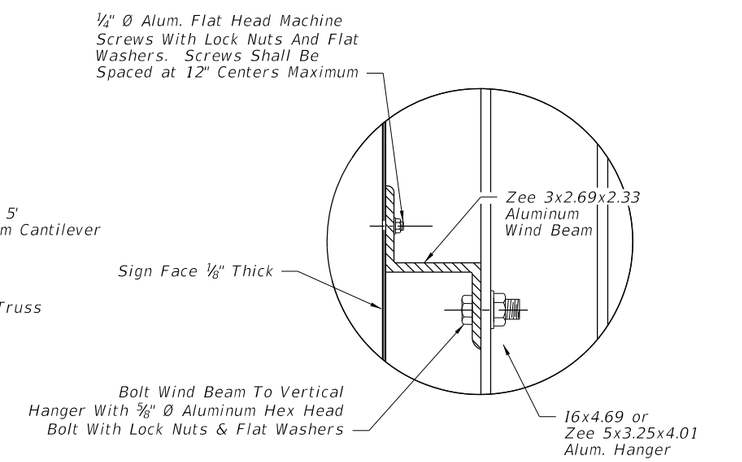

(SHOWING ATTACHMENT OF SIGN FACE PANEL TO VERTICAL HANGER SUPPORTS, VERTICAL I SHAPE HANGER AS SHOWN, Zee SHAPE OPTIONAL)

DETAIL A

GENERAL NOTES

1. Work this Index with Index 11200.
2. Shop Drawings:
   A. Required for Sign Panels deeper than 10'-0" with a horizontal panel splice.
   B. Splice must be located at an interior Zee Support and only allowed on signs greater than 10'-0".
3. Materials:
   A. Aluminum:
      a. Bars, and Extruded Shapes: ASTM B 221, Alloy 6061-T6 or Alloy 6351-T5
      b. Structural Shapes: ASTM B308, Alloy 6061-T6
      c. Flat Head and Hex Head Machine Bolts: ASTM F468, Alloy 2024-T4
      d. Hex Nuts: ASTM F467, Alloy 6061-T6 or Alloy 6262-T9
      e. Washers: ASTM B221, Alloy 7075-T6
   B. Steel Materials:
      a. U-Bolts: ASTM A449 or ASTM A193 B7
      b. Nuts: ASTM F563, 2 per leg
      c. Washers: ASTM F436
4. Coatings:
   A. Aluminum Bolts, Nuts and Washers: Anodic (0.0002 inches min) and chromate sealed.
   B. Galvanized Steel Bolts, Nuts and Washers: ASTM F2329

DETAILS OF SIGN FACE & TRUSS CONNECTION

NOTES:

1. Work this Index in conjunction with CANTILEVER SIGN STRUCTURE DATA TABLES in the Plans and Index 11300.

2. Handholes are required at pole base for DMS Structures. Refer to Index 18300 for Handhole Details.

3. Shop Drawings are required.

   Obtain Shop Drawing approval prior to fabrication. Include the following:
   A. Upright Pipe height ('A'). Verify dimension in the field prior to submittal.
   B. Foundation elevations: Ensure minimum vertical clearances of the sign panel over the roadway.
   C. Height of the foundation above adjacent ground.
   D. Anchor bolt orientation with respect to centerline of truss and the direction of traffic.
   E. Chord Splices
   F. Handholes at pole base (when required).

4. Materials:

   A. Sign Structure:
      a. Upright and Chords (Steel Pipe): API-5L-X42, 42 ksi yield or ASTM A500, Grade B (Min.)
      b. Steel Angles and Structural Plates and Bars: ASTM A709 Grade 36
      c. Weld Material: E70XX
   B. Bolts, Nuts and Washers:
      a. High Strength Bolts: ASTM A325 Type 1
      b. Nuts: ASTM A563 Grade DH Heavy-Hex
      c. Washers: ASTM F436 Type 1, one under turned element
   C. Anchor Bolts, Nuts and Washers
      a. Anchor Bolts: ASTM F1554 Grade 55
      b. Nuts: ASTM A563 Grade A Heavy-Hex (5 per bolt)
      c. Plate Washers: ASTM A36 (2 per bolt)
   D. Concrete:
      a. Spread Footing Concrete: Class IV
      b. Drilled Shaft concrete: Class IV (Drilled Shaft)
   E. Reinforcing Steel: Specification Section 415

5. Fabrication:

   A. Welding: Specification Section 460-6.4
   B. Chord Splices: "SD" Panel from upright is the closest panel in which a chord splice may be used. See Plans for CANTILEVER SIGN STRUCTURE DATA TABLE. Minimum splice spacing is two truss panel lengths apart.
   C. Upright splices: Not allowed
   D. Structural bolt hole diameters: Bolt diameter plus $\frac{1}{16}$"
   E. Anchor bolt hole diameters: Bolt diameter plus $\frac{1}{2}$"
   F. Hot Dip Galvanize after fabrication.
   G. Shop assemble the entire structure after galvanizing to validate/document alignment and clearance for bolted connections as well as contact between connecting plates. Take remedial action, if necessary, prior to shipment.
   H. Disassemble, as necessary, and secure components for shipment.

6. Coatings:

   A. Bolts, Nuts and Washers: ASTM F2329
   B. All other steel, including Plate Washers, hot dip galvanize: ASTM A123

7. Construction:

   A. Construct foundation in accordance with Specification Section 455, except payment is included in the cost of the structure.
   B. Prior to erection, record the as-built anchor locations and submit to the Engineer.
   C. Place backfill above spread footings prior to installation of the sign panels. Do not remove or reduce backfill without prior approval of the Engineer.
   D. Tighten nuts and bolts in accordance with Specification Section 700. Split-Lock Washers are not permitted.
   E. Install Aluminum Sign Panels as shown on the Elevation drawing.
   F. Place structural grout pad with drain between top of foundation and bottom of baseplate in accordance with Specification Section 649-7.

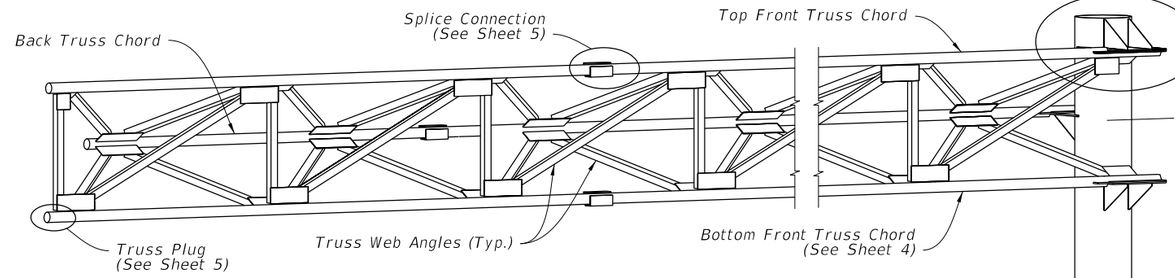

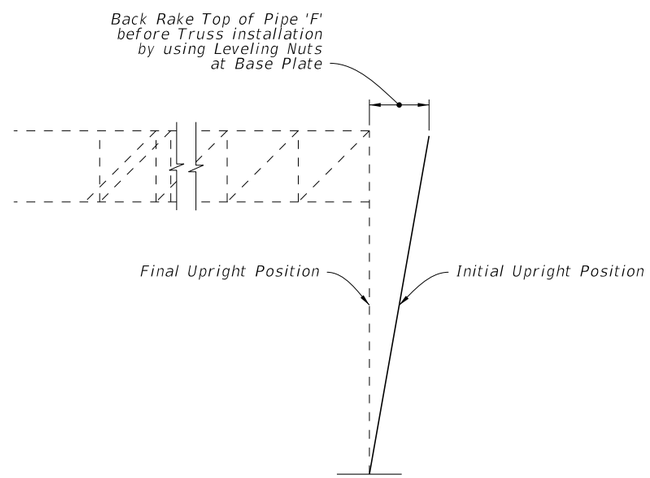

CAMBER DIAGRAM

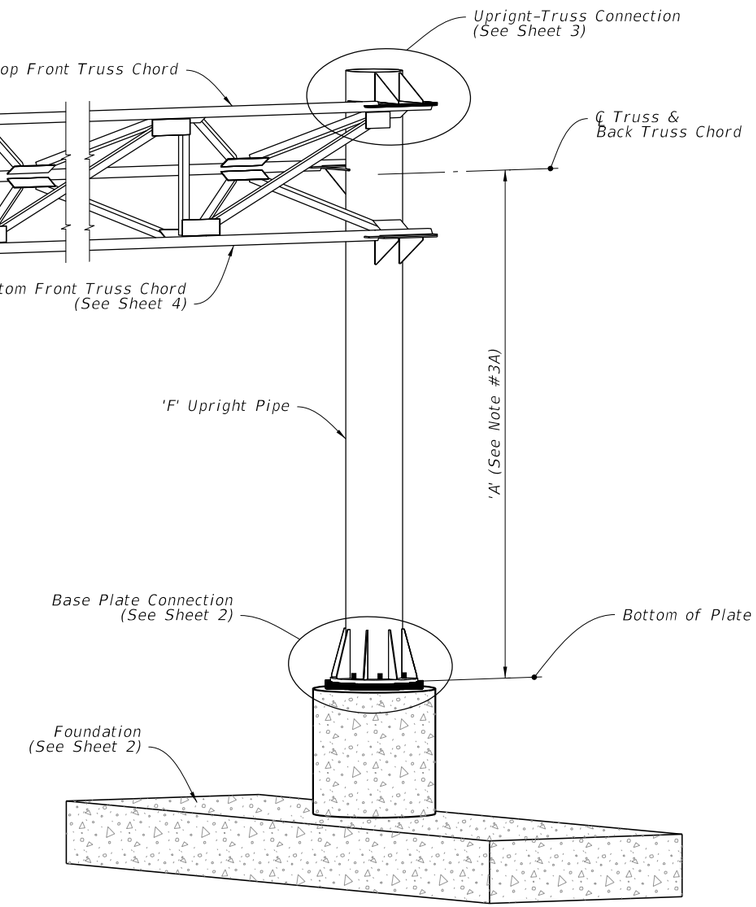

ISOMETRIC VIEW

CANTILEVER SIGN ASSEMBLY

12/3/2015 11:44:00 AM

LAST REVISION	REVISION	DESCRIPTION:			INDEX NO.	SHEET NO.
01/01/16			FDOT FY 2016-17 DESIGN STANDARDS	CANTILEVER SIGN STRUCTURE	11310	1 of 5

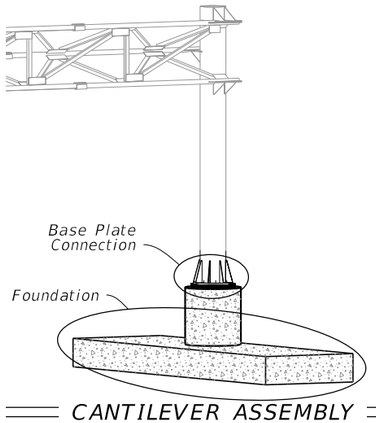

CANTILEVER ASSEMBLY

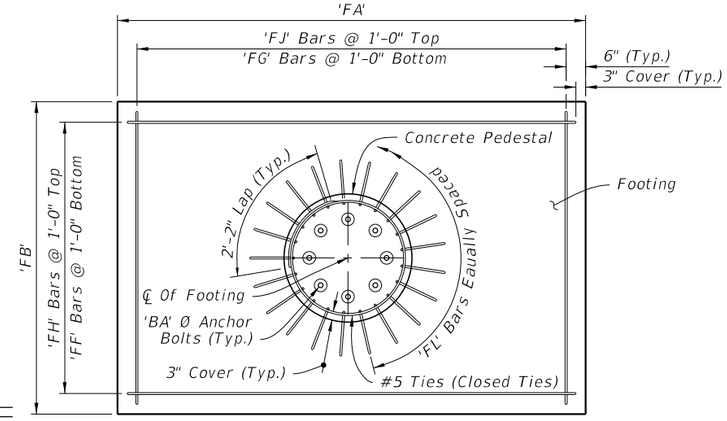

PLAN

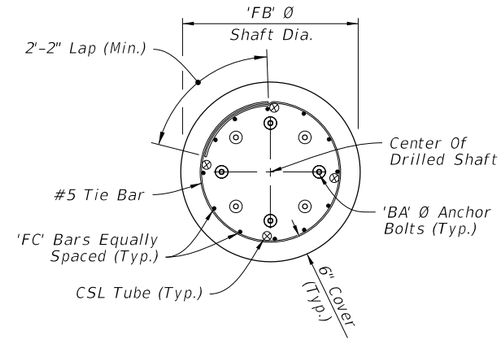

PLAN

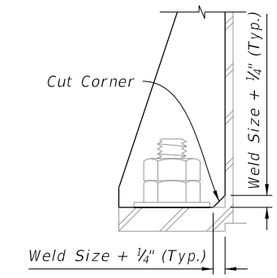

DETAIL 'A'

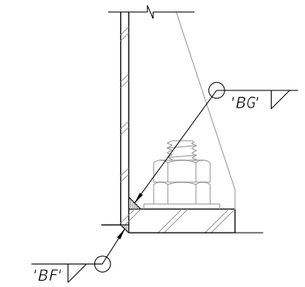

DETAIL 'B'

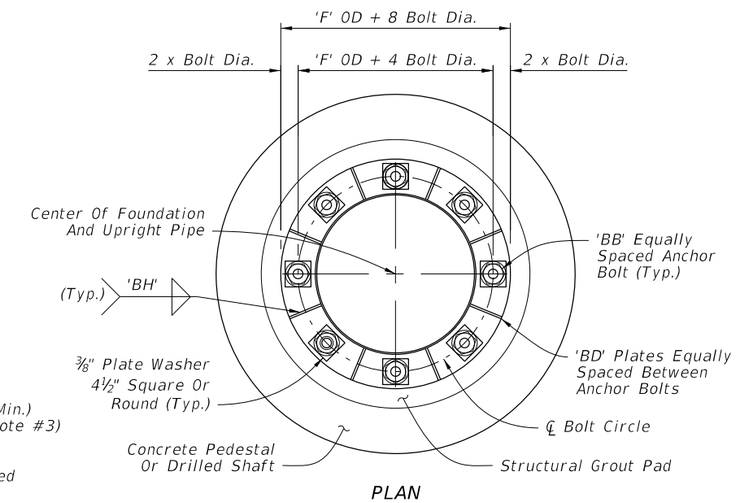

PLAN

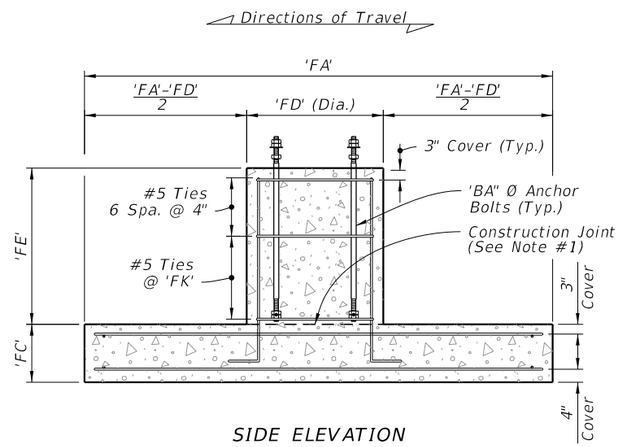

SIDE ELEVATION

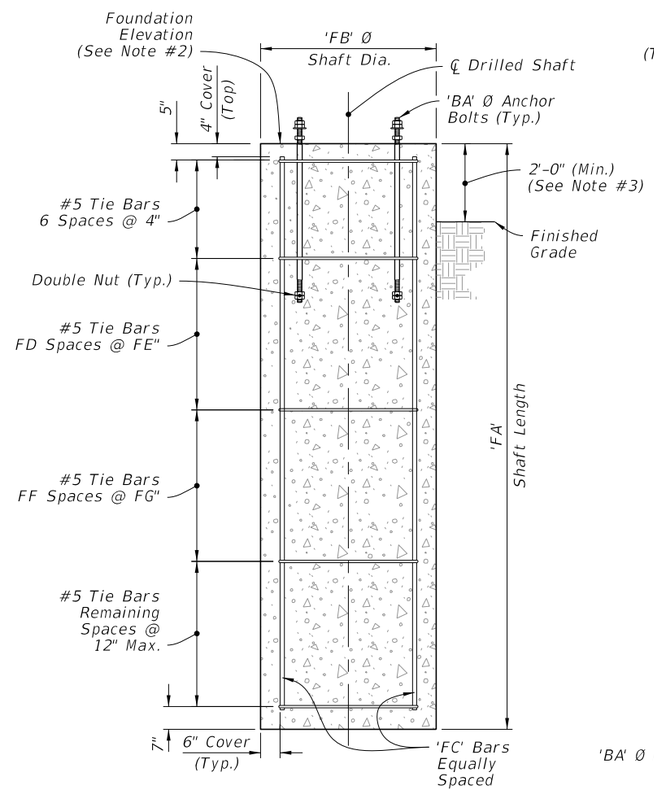

ELEVATION

DRILLED SHAFT
(Alternate Foundation)

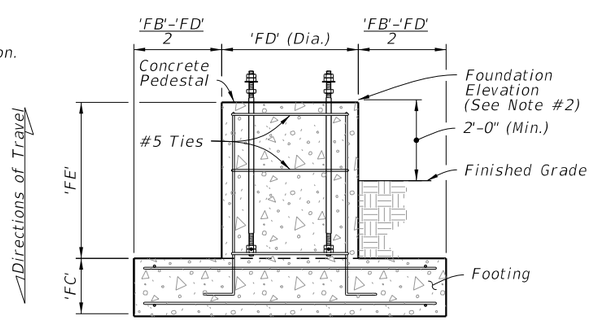

FRONT ELEVATION

FOOTING AND PEDESTAL

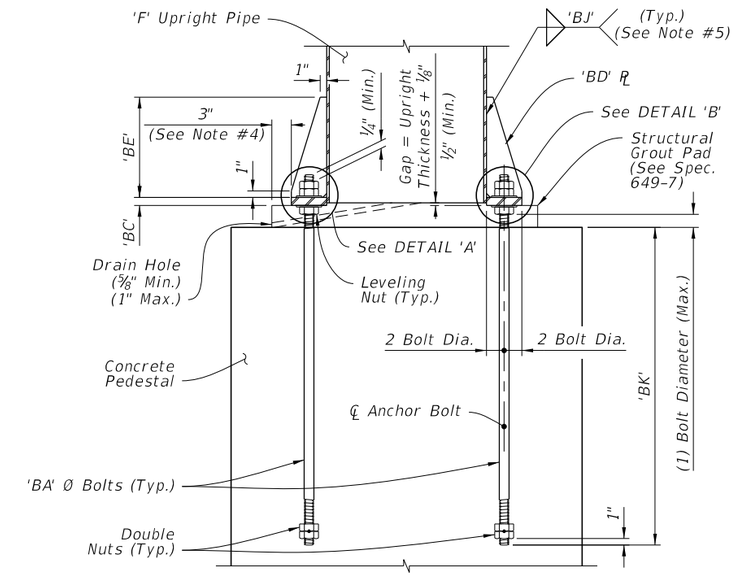

ELEVATION

NOTES:

1. Construction joint allowed, roughen surface to ¼" minimum amplitude prior to pour.
2. See Traffic Plans for elevation at top of Foundation.
3. Install Drilled Shaft with a 2'-0" minimum from top elevation of the drill shaft to the finished grade, unless specified otherwise in the plans.
4. Structural Grout Pad dimension may be modified to be less than 3" where the footprint of the Structural Grout Pad does not provide adequate clearance for accessibility considerations.
5. Wrap fillet weld around the stiffner termination on the tube wall.

FOUNDATION

BASE PLATE CONNECTION

12/3/2015 11:44:02 AM

LAST REVISION	REVISION	DESCRIPTION:			INDEX NO.	SHEET NO.
01/01/16			FY 2016-17 DESIGN STANDARDS	CANTILEVER SIGN STRUCTURE	11310	2 of 5

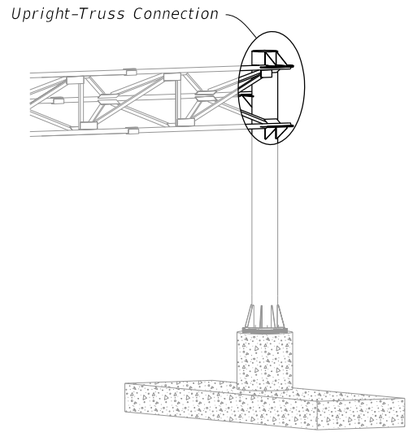

CANTILEVER ASSEMBLY

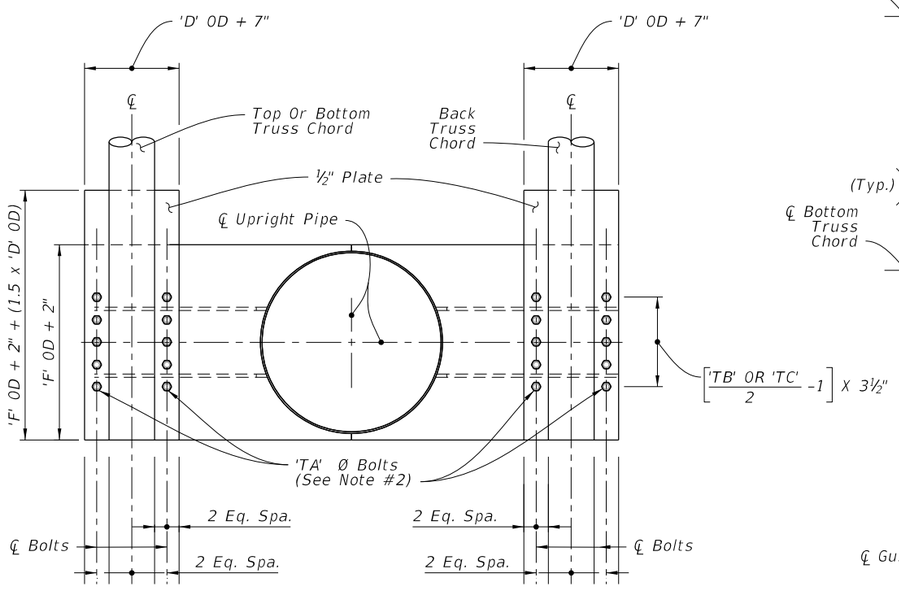

SECTION A-A

(With Gusset Plates And Web Angles Omitted For Clarity)

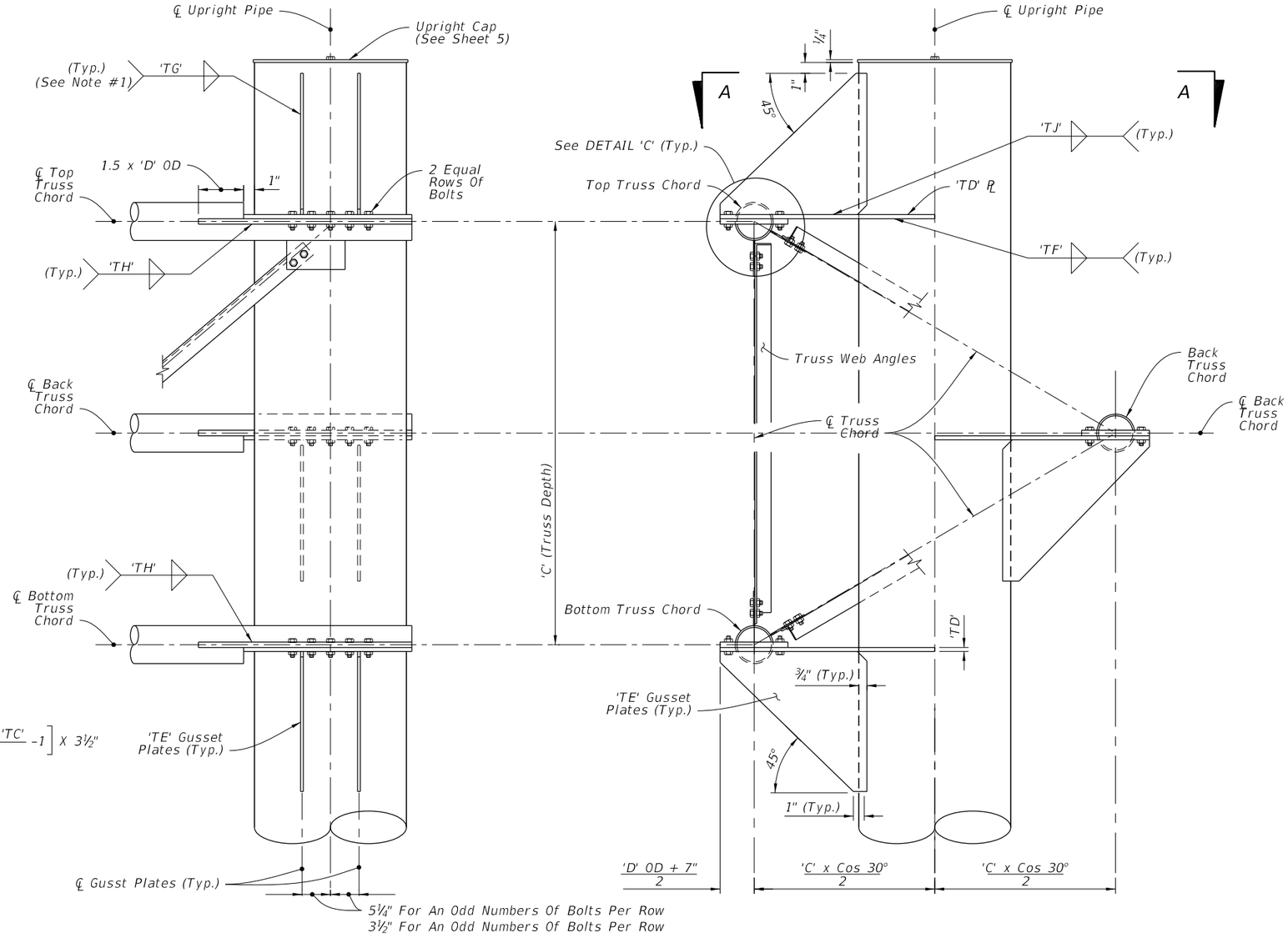

UPRIGHT-TRUSS CONNECTION DETAIL

(Web Members From Back Truss Chord Omitted For Clarity)

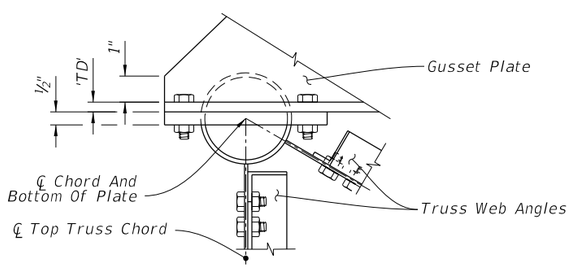

DETAIL 'C'

NOTES:

1. Wrap fillet weld around the stiffner termination on the tube wall.
2. Truss Chord Bolts:
   A. Top and Bottom: Install 'TC' hex head bolts with self-locking nuts.
   B. Back: Install 'TB' hex head bolts with self-locking nuts.

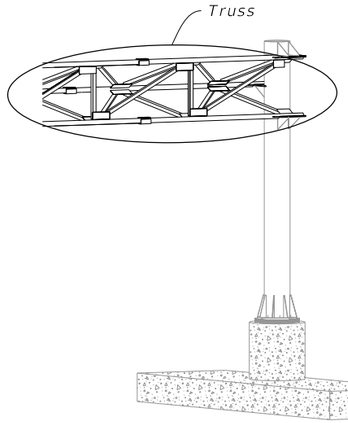

CANTILEVER ASSEMBLY

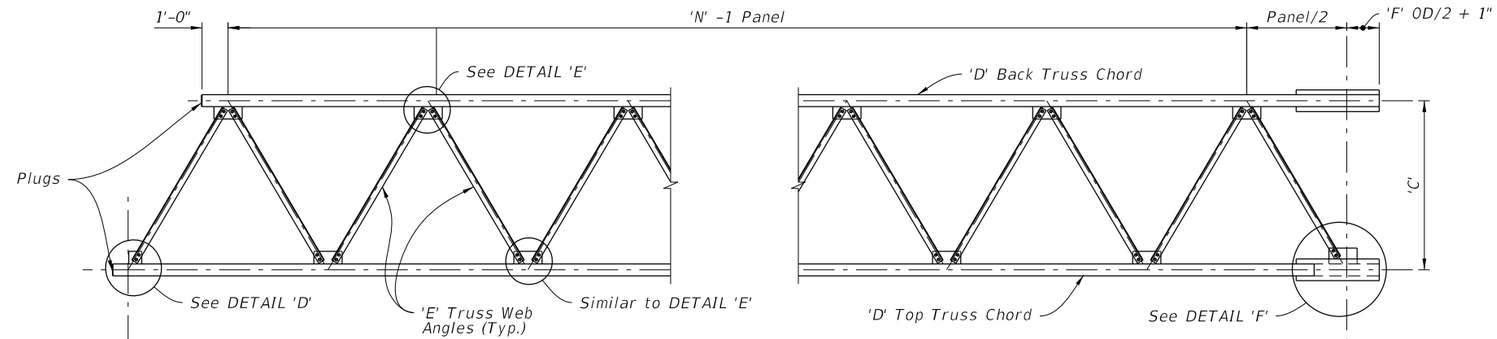

Section B-B (Section C-C Similar)
(See Note #1)

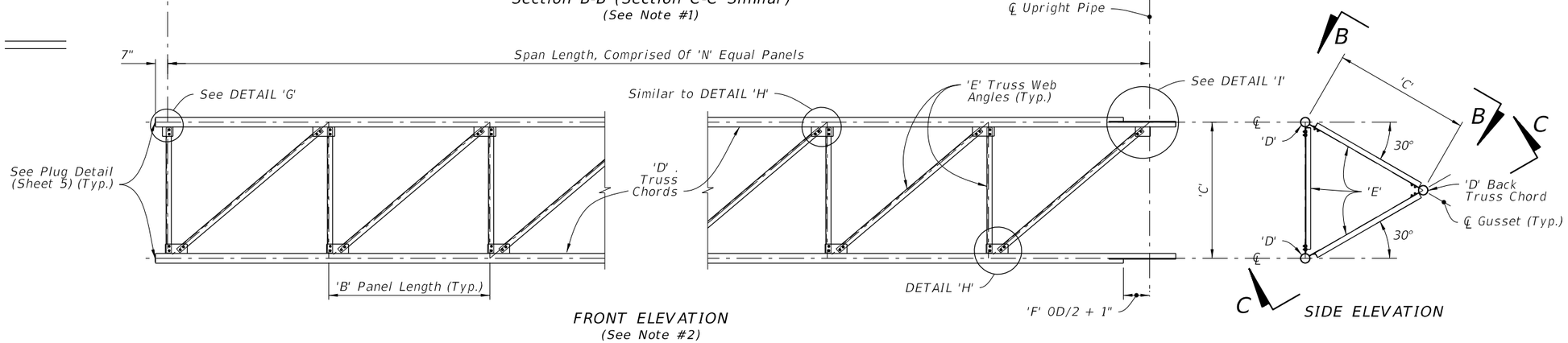

FRONT ELEVATION
(See Note #2)

SIDE ELEVATION

TRUSS

TRUSS NOTES:

1. Out-of-plane members are not shown for clarity.
2. Back truss chord and attached angles are not shown for clarity.
3. Wrap fillet weld around plate termination on the tube wall.
4. Chord Splices not shown.

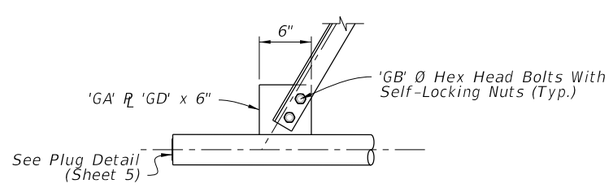

DETAIL 'D'

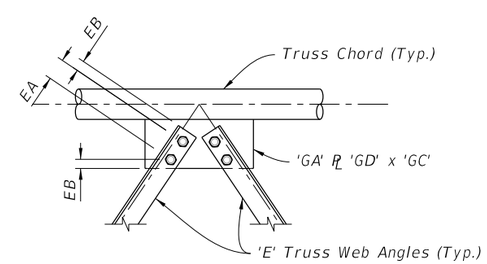

DETAIL 'E'

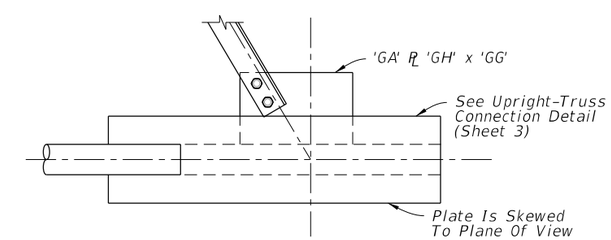

DETAIL 'F'

Bolt Size	Distance	
	EA	EB
1" Ø	3½"	1¾"
⅞" Ø	3"	1½"
¾" Ø	2½"	1¼"
⅝" Ø	2¼"	1⅛"

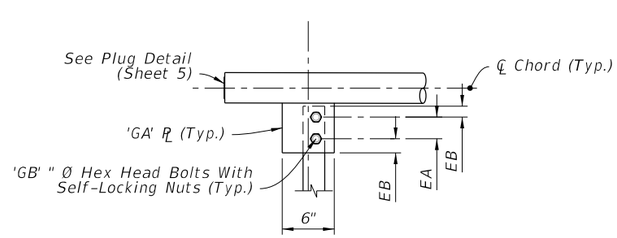

DETAIL 'G'

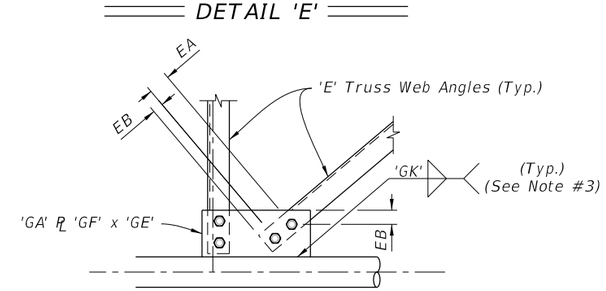

DETAIL 'H'

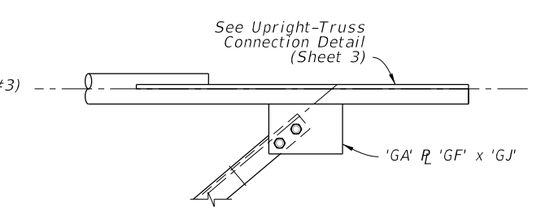

DETAIL 'I'

12/3/2015 11:44:05 AM

LAST REVISION	REVISION	DESCRIPTION:			INDEX NO.	SHEET NO.
01/01/16			FDOT FY 2016-17 DESIGN STANDARDS	CANTILEVER SIGN STRUCTURE	11310	4 of 5

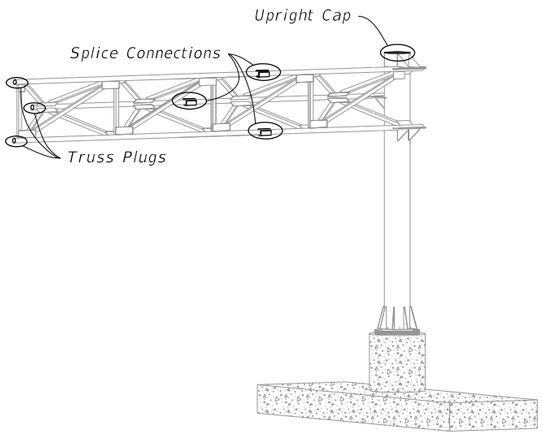

CANTILEVER ASSEMBLY

Bolt Size	Distance	
	A	B
1" Ø	1¾"	3½"
⅞" Ø	1½"	3"
¾" Ø	1¼"	2½"

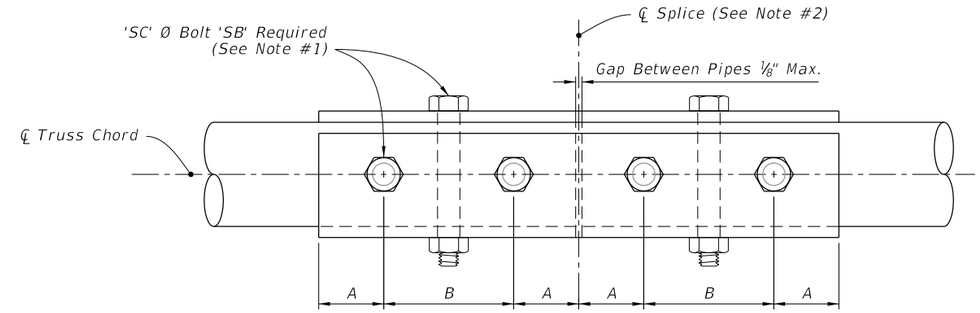

FRONT ELEVATION

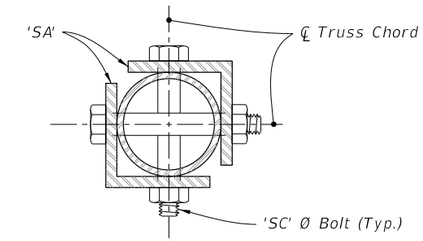

SIDE ELEVATION

SPLICE CONNECTION DETAIL

SPLICE CONNECTION NOTES:

1. Only 6 bolts are shown in detail for clarity. (One Half Each Side Of Splice)
2. Splices are not allowed for truses less than or equal to 40', Splice optional for trusses greater than 40'.

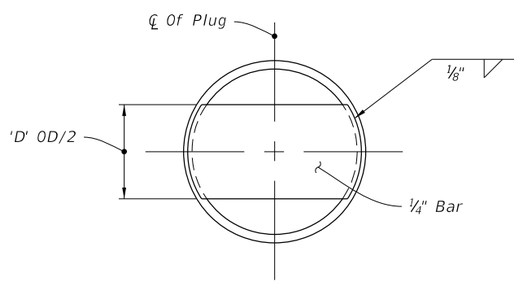

TRUSS PLUG DETAIL

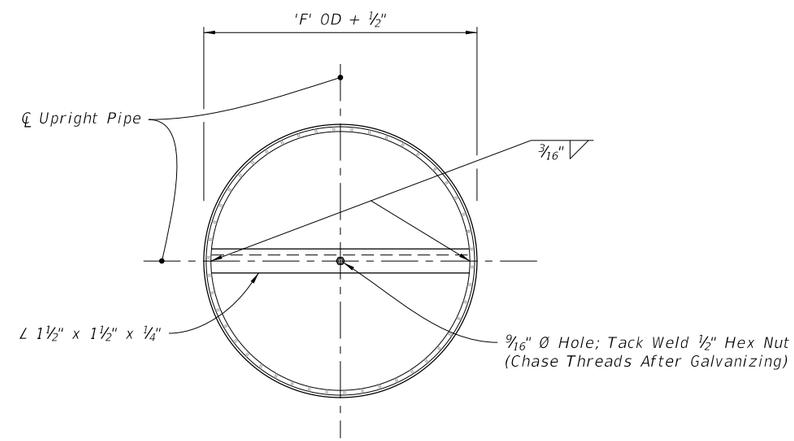

PLAN

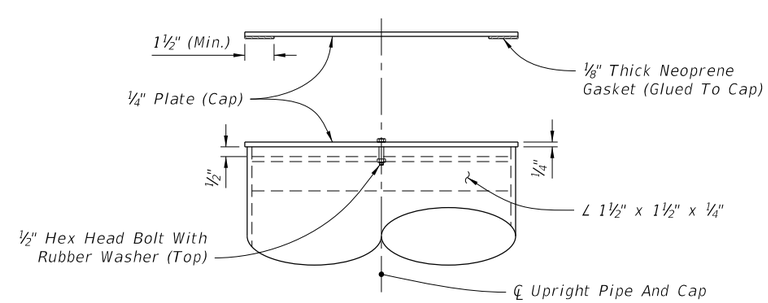

ELEVATION

UPRIGHT CAP DETAIL

12/3/2015 11:44:06 AM

LAST REVISION	REVISION	DESCRIPTION:			INDEX NO.	SHEET NO.
01/01/16			FY 2016-17 DESIGN STANDARDS	CANTILEVER SIGN STRUCTURE	11310	5 of 5

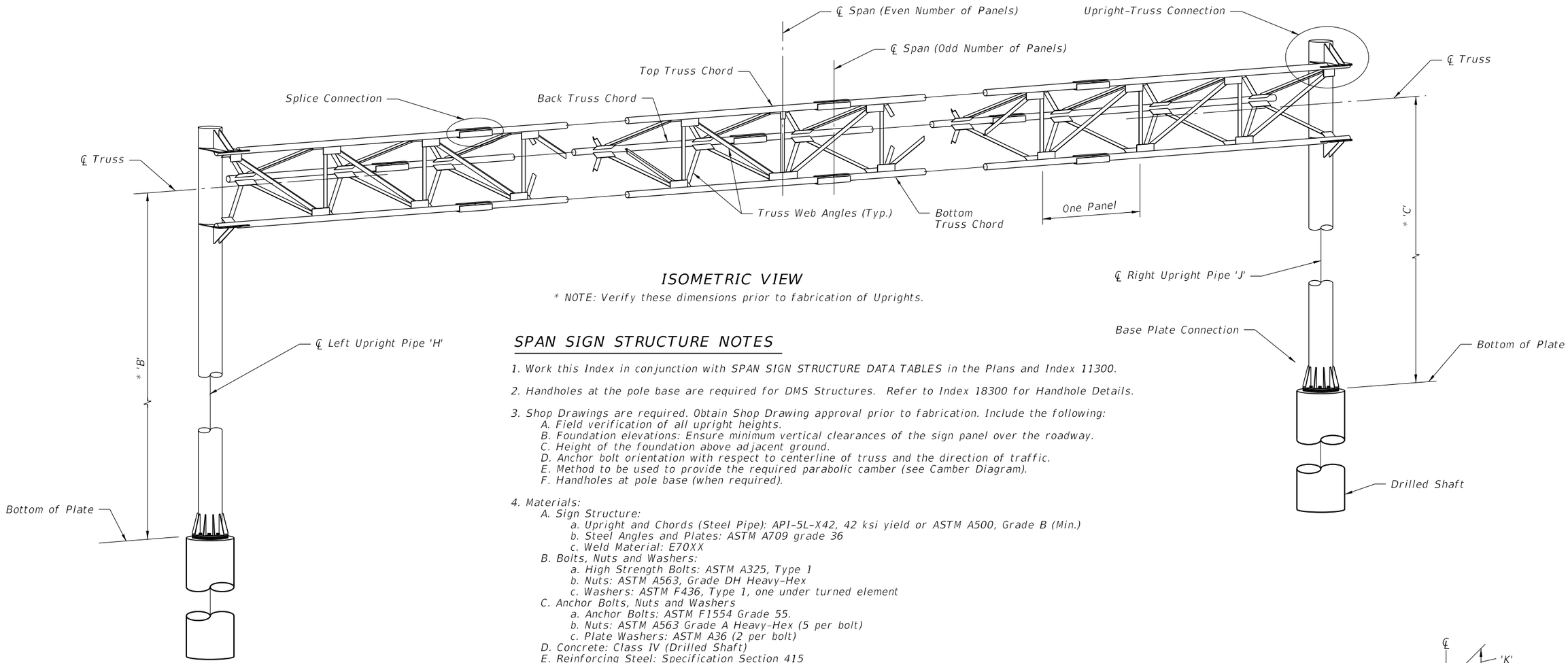

ISOMETRIC VIEW

* NOTE: Verify these dimensions prior to fabrication of Uprights.

SPAN SIGN STRUCTURE NOTES

1. Work this Index in conjunction with SPAN SIGN STRUCTURE DATA TABLES in the Plans and Index 11300.

2. Handholes at the pole base are required for DMS Structures. Refer to Index 18300 for Handhole Details.

3. Shop Drawings are required. Obtain Shop Drawing approval prior to fabrication. Include the following:
   - A. Field verification of all upright heights.
   - B. Foundation elevations: Ensure minimum vertical clearances of the sign panel over the roadway.
   - C. Height of the foundation above adjacent ground.
   - D. Anchor bolt orientation with respect to centerline of truss and the direction of traffic.
   - E. Method to be used to provide the required parabolic camber (see Camber Diagram).
   - F. Handholes at pole base (when required).

4. Materials:
   - A. Sign Structure:
     - a. Upright and Chords (Steel Pipe): API-5L-X42, 42 ksi yield or ASTM A500, Grade B (Min.)
     - b. Steel Angles and Plates: ASTM A709 grade 36
     - c. Weld Material: E70XX
   - B. Bolts, Nuts and Washers:
     - a. High Strength Bolts: ASTM A325, Type 1
     - b. Nuts: ASTM A563, Grade DH Heavy-Hex
     - c. Washers: ASTM F436, Type 1, one under turned element
   - C. Anchor Bolts, Nuts and Washers
     - a. Anchor Bolts: ASTM F1554 Grade 55.
     - b. Nuts: ASTM A563 Grade A Heavy-Hex (5 per bolt)
     - c. Plate Washers: ASTM A36 (2 per bolt)
   - D. Concrete: Class IV (Drilled Shaft)
   - E. Reinforcing Steel: Specification Section 415

5. Fabrication:
   - A. Welding: Specification Section 460-6.4
   - B. Chord Splices: Minimum splice spacing is three truss panel lengths apart and three truss panel lengths from the uprights. Chord Splices may be either the Standard Splice or the Alternate Splice but not both on the same structure.
   - C. Upright splice: Not allowed
   - D. Structural bolt hole diameters: Bolt diameter plus $\frac{1}{16}$".
   - E. Anchor bolt hole diameters: Bolt diameter plus $\frac{1}{2}$".
   - F. Hot Dip Galvanize after fabrication.
   - G. Shop assemble the entire structure after galvanizing to validate/document alignment and clearance for bolted connections as well as contact between connecting plates. Take remedial action, if necessary, prior to shipment.
   - H. Disassemble as necessary and secure components for shipment.

6. Coatings:
   - A. Bolts, Nuts and Washers: ASTM F2329
   - B. All other steel, including Plate Washers, hot dip galvanize: ASTM A123

7. Construction:
   - A. Construct foundation in accordance with Specification Section 455 Drilled Shaft, except payment is included in the cost of the structure.
   - B. Prior to erection, record the as-built anchor locations and submit to the Engineer.
   - C. Provide a parabolic camber with the maximum upward deflection as shown on the Camber Diagram.
   - D. Tighten nuts and bolts in accordance with Specification Section 700. Split-Lock Washers are not permitted.
   - E. Install Aluminum Sign Panels as shown on the Elevation drawing.
   - F. After installation, place wire screen between top of foundation and bottom of baseplate in accordance with Specification Section 649-6.

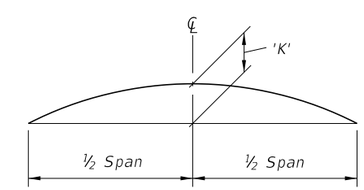

CAMBER DIAGRAM

12/3/2015 11:44:07 AM

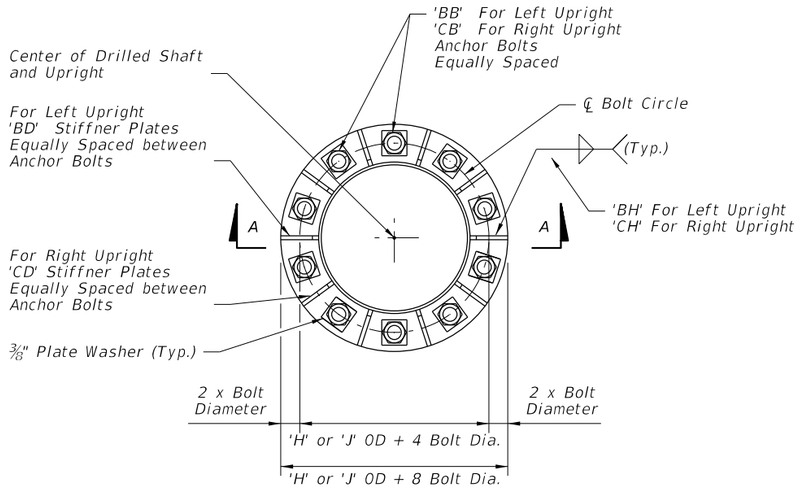

PLAN VIEW
BASE PLATE

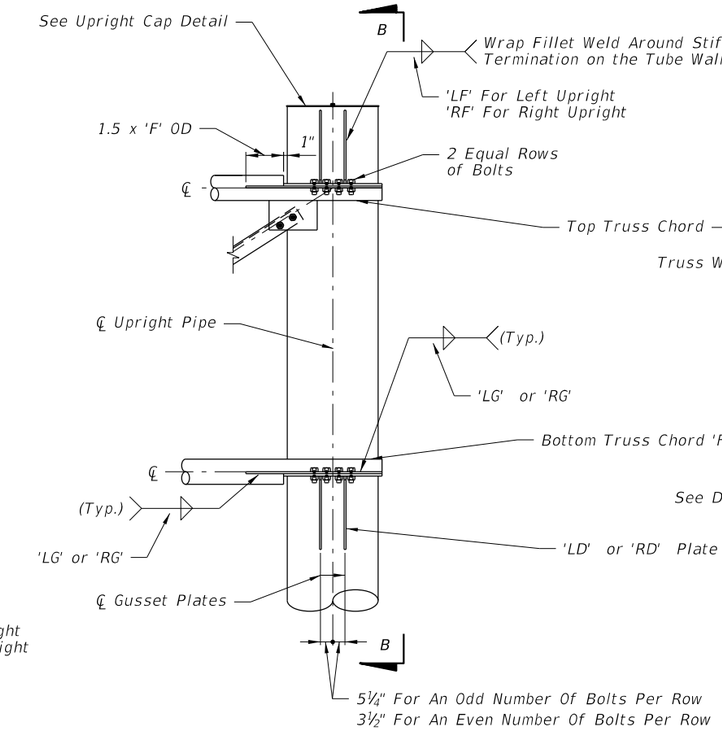

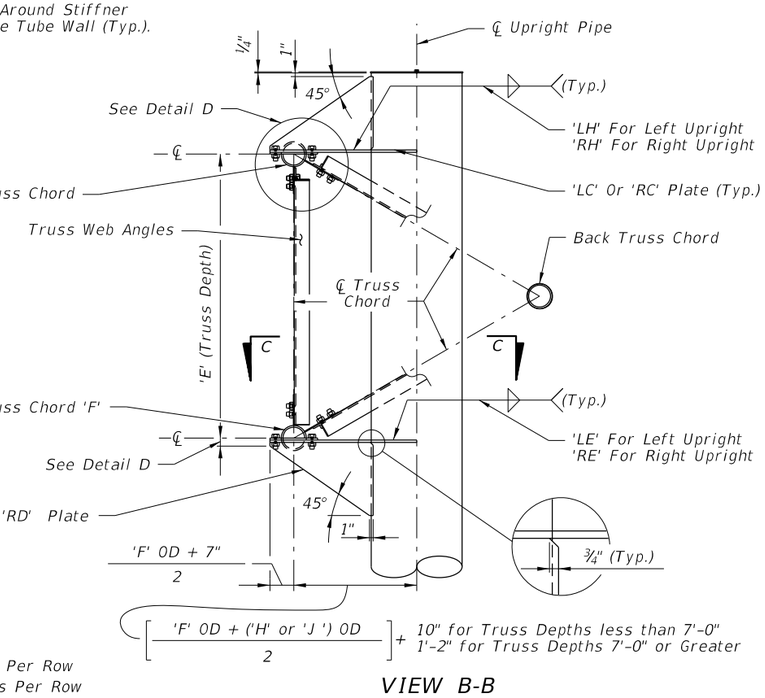

VIEW B-B

Web Members From Back Truss
Chord Omitted For Clarity

UPRIGHT-TRUSS CONNECTION DETAIL
RIGHT UPRIGHT SHOWN
(LEFT UPRIGHT SIMILAR)

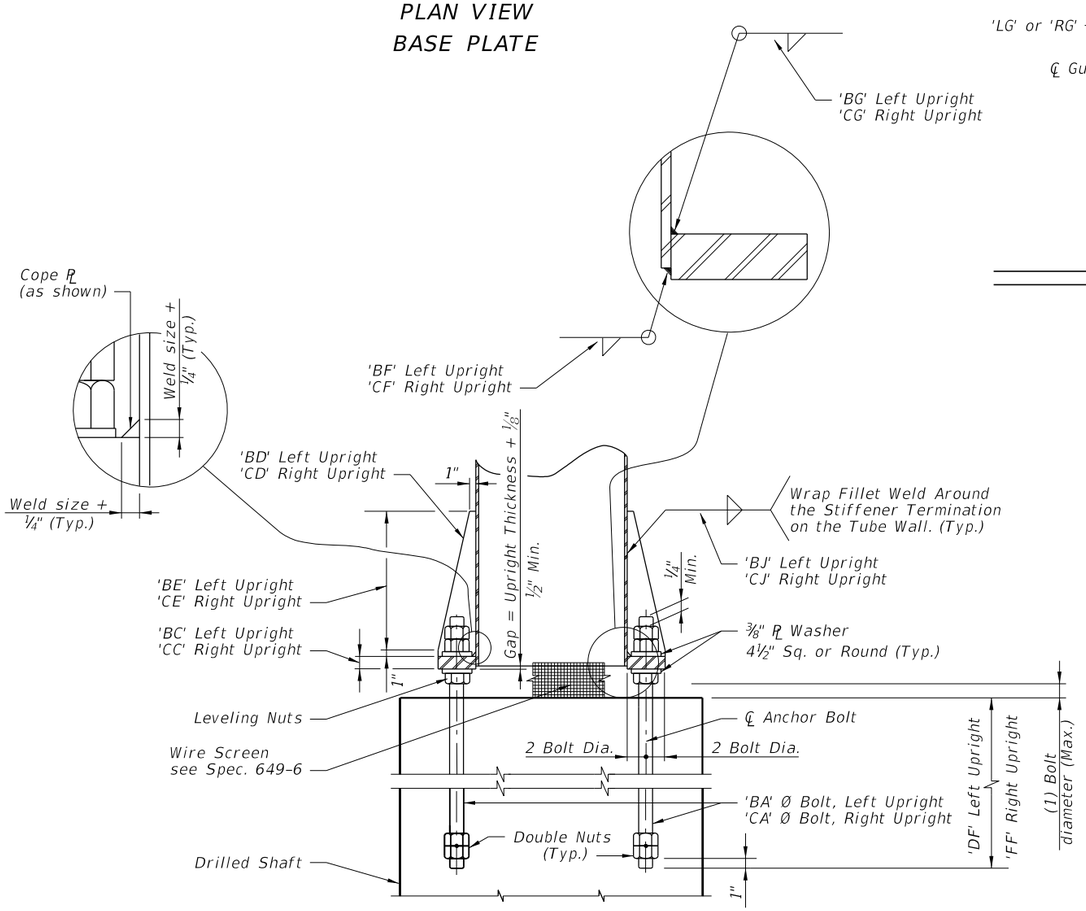

SECTION A-A

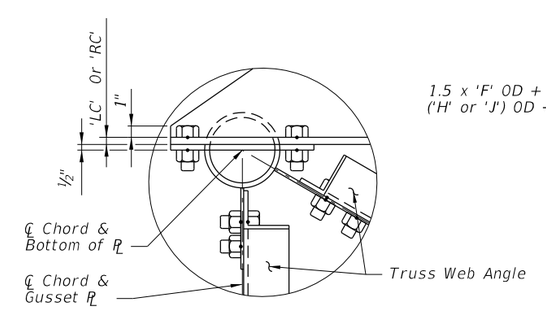

DETAIL D

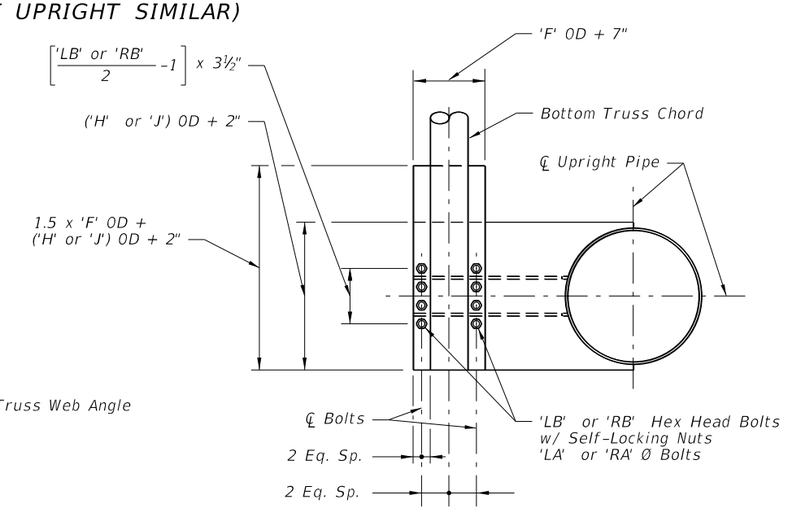

SECTION C-C

(With Gusset Plate and
Angles omitted for clarity)

NOTE:
Abbreviation
OD ~ Outside Diameter

12/3/2015 11:44:08 AM

LAST REVISION	REVISION	DESCRIPTION:			INDEX NO.	SHEET NO.
07/01/15			FY 2016-17 DESIGN STANDARDS	SPAN SIGN STRUCTURE	11320	2 of 5

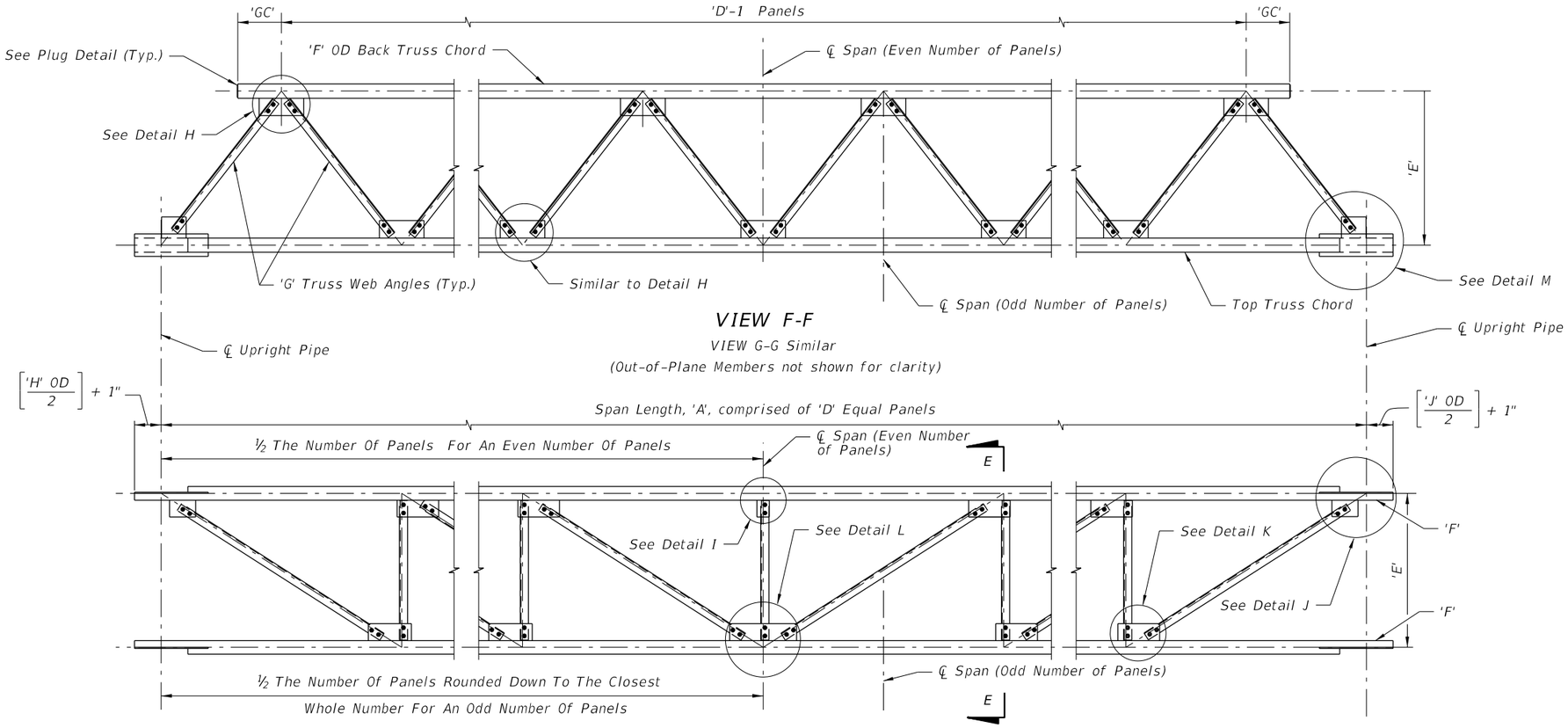

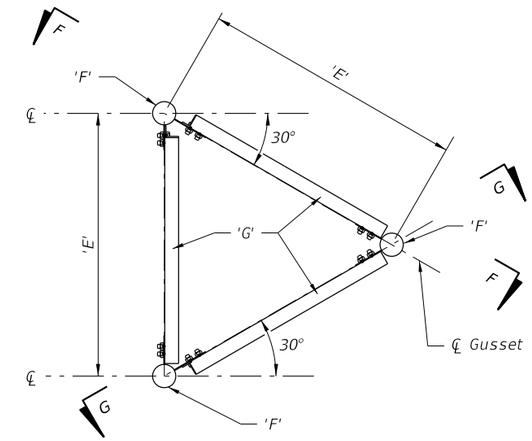

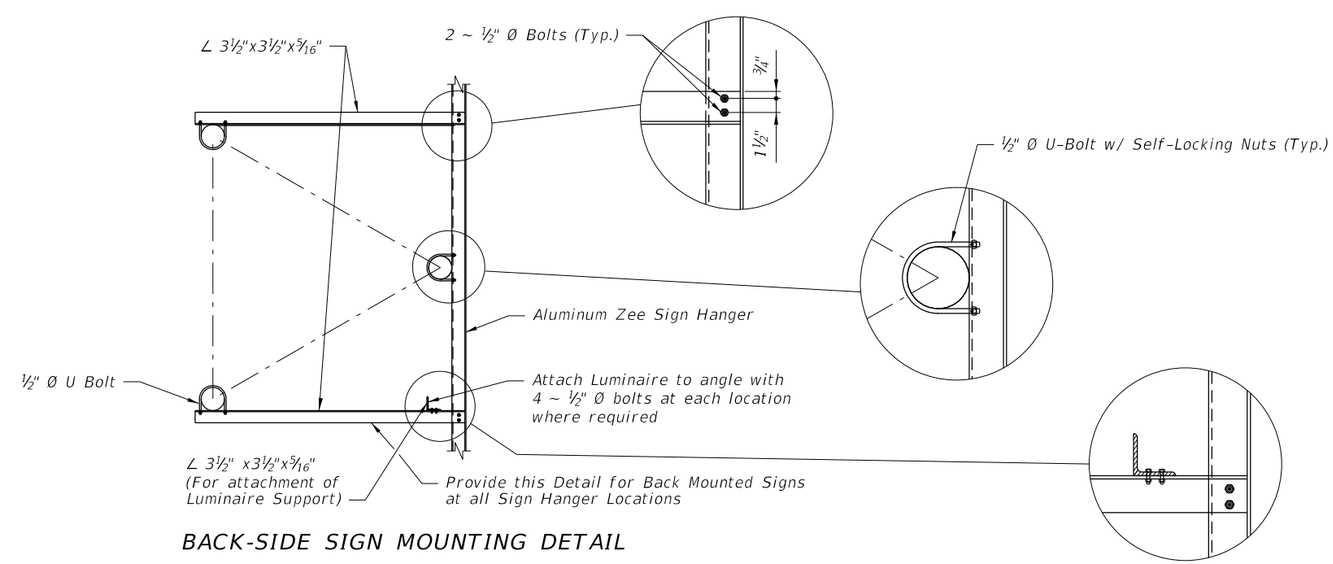

12/3/2015 11:44:08 AM

LAST REVISION	REVISION	DESCRIPTION:			INDEX NO.	SHEET NO.
07/01/15			FDOT FY 2016-17 DESIGN STANDARDS	SPAN SIGN STRUCTURE	11320	3 of 5

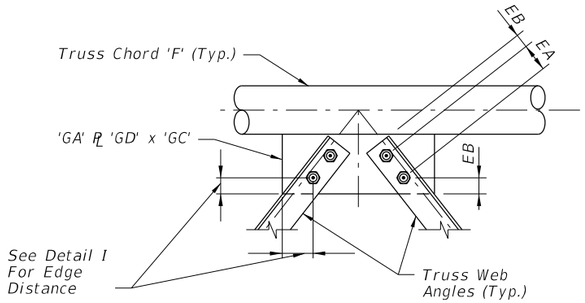

DETAIL H

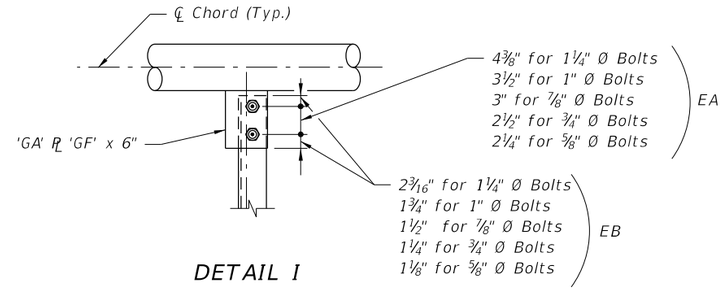

DETAIL I

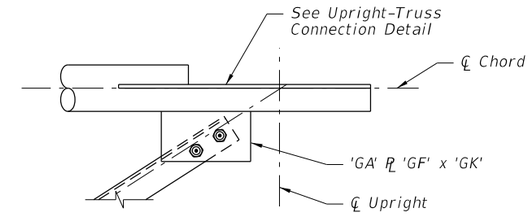

DETAIL J

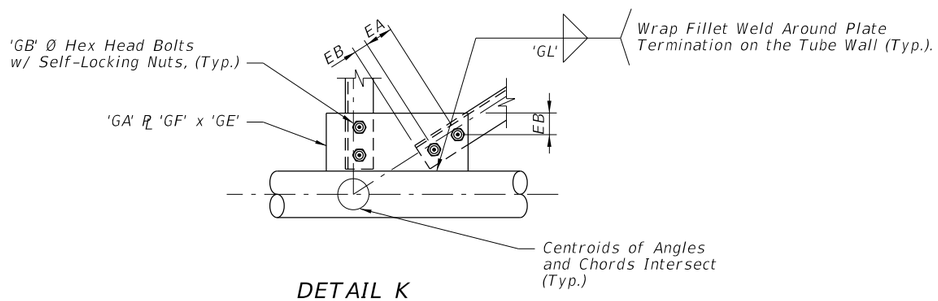

DETAIL K

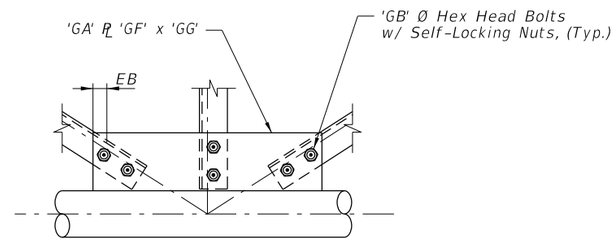

DETAIL L

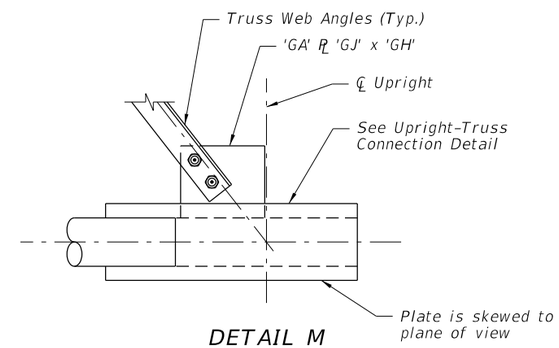

DETAIL M

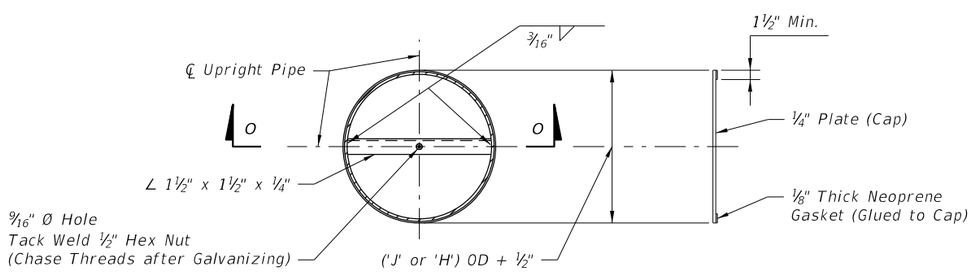

SECTION N-N

SECTION O-O

(Showing Cap plate only)

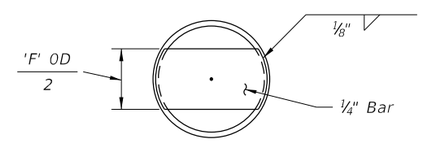

PLUG DETAIL

(Each end of Back Truss Chord)

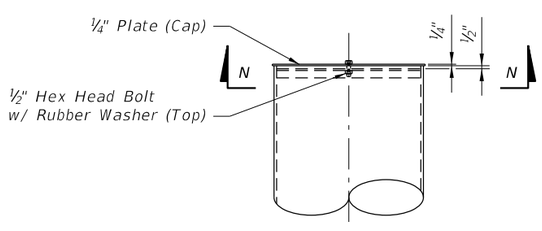

UPRIGHT CAP DETAIL

12/3/2015 11:44:09 AM

LAST REVISION	REVISION	DESCRIPTION:			INDEX NO.	SHEET NO.
07/01/15			FDOT FY 2016-17 DESIGN STANDARDS	SPAN SIGN STRUCTURE	11320	4 of 5

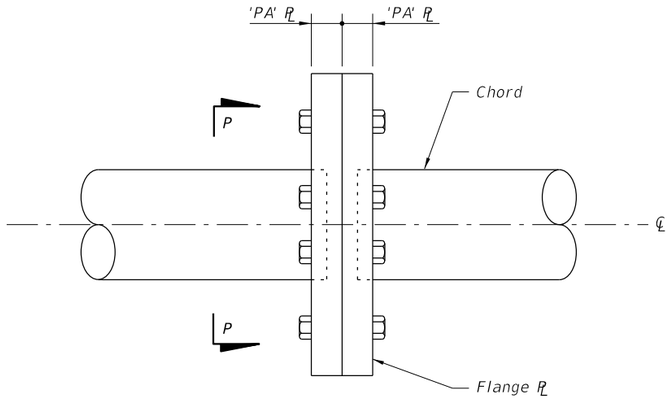

ELEVATION
ALTERNATE SPLICE CONNECTION

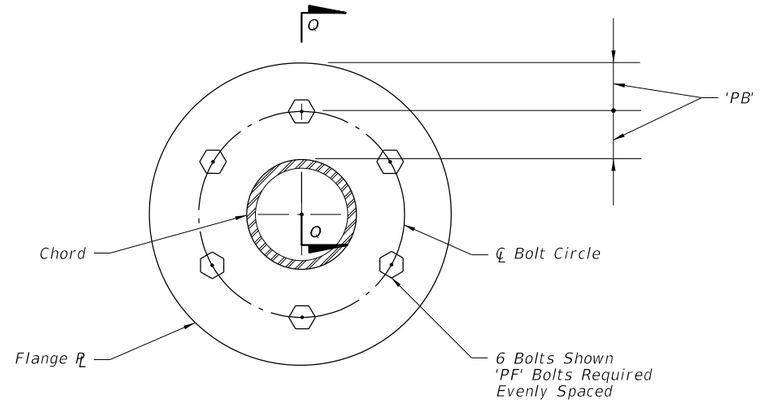

SECTION P-P

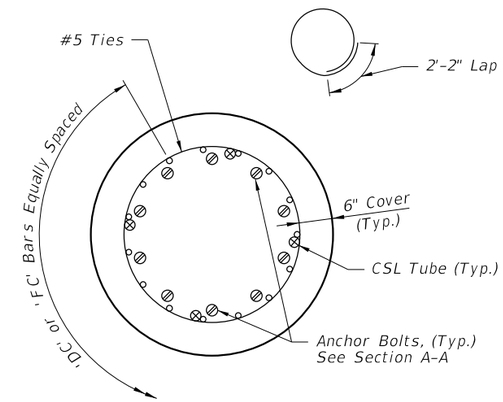

PLAN VIEW
DRILLED SHAFT

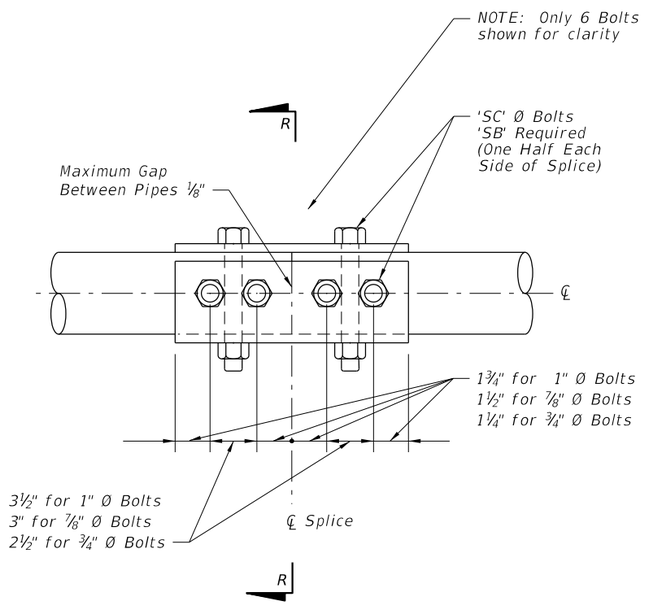

ELEVATION
SPLICE CONNECTION

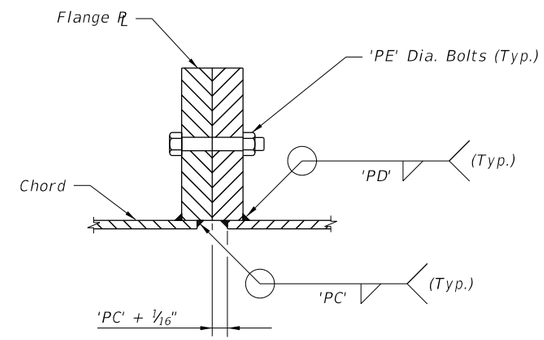

SECTION Q-Q

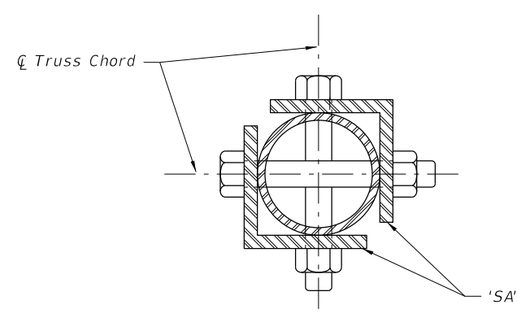

SECTION R-R

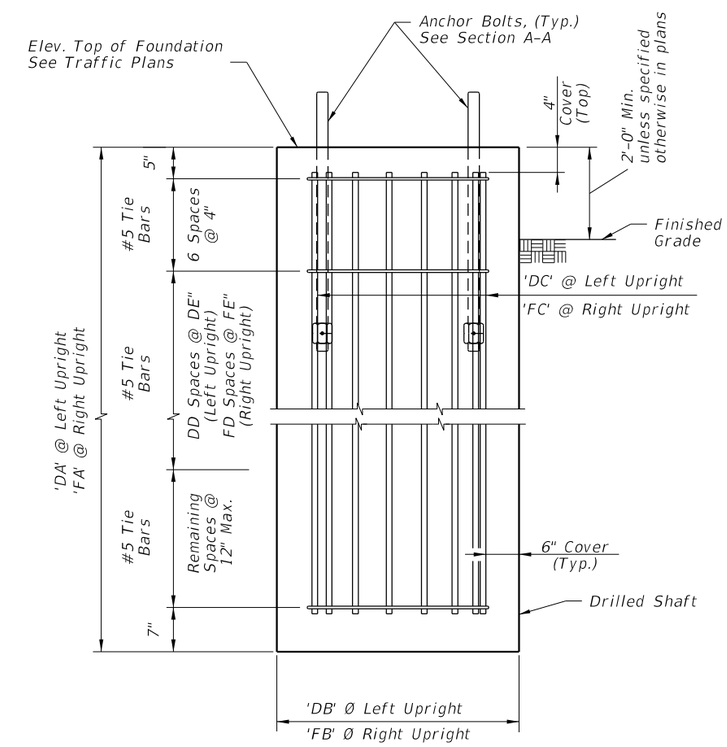

ELEVATION
DRILLED SHAFT

12/3/2015 11:44:10 AM

LAST REVISION	REVISION	DESCRIPTION:			INDEX NO.	SHEET NO.
07/01/10			FDOT FY 2016-17 DESIGN STANDARDS	SPAN SIGN STRUCTURE	11320	5 of 5

STEP 1: Calculate the area and the centroid for an individual sign or a sign cluster. Note that the centroid and areas have been calculated for frequently used sign clusters. These are shown on Sheet No. 6, 7 & 8 of 9.

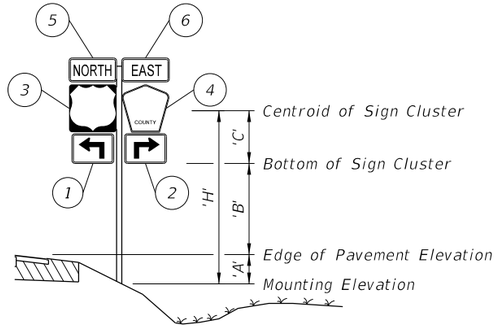

	Size H x V	Centroid Local 'Yn'	Centroid Global 'Xn'	Centroid Global 'Yn'	'An'	'Xn' x 'An'	'Yn' x 'An'
	(in. x in.)	(in.)	(in.)	(in.)	(in.²)	(in.³)	(in.³)
1	21 x 15	7.5	-10.5-1.5-1.5 = -13.5	7.5	315	-4,252.5	2,362.5
2	21 x 15	7.5	10.5+1.5+1.5 = 13.5	7.5	315	+4,252.5	2,362.5
3	24 x 24	12	-12-1.5 = -13.5	15+1+12= 28	576	-7,776	16,128
4	24 x 24	12	12+1.5 = 13.5	15+1+12= 28	436	5,886	12,208
5	24 x 12	6	-12-1.5 = -13.5	15+1+24+ 1+6=47	288	-3,888	13,536
6	24 x 12	6	12+1.5 = 13.5	15+1+24+ 1+6=47	288	3,888	13,536
				TOTALS	2,218	-1,890	60,133

Σ ('A_n') = 2,218 in.² = 15.4 ft.² Σ ('X_n' x 'A_n') = -1,890 in.³ = -1.09 ft.³ Σ ('Y_n' x 'A_n') = 60,133 in.³ = 34.8 ft.³

$$'X'_c = \frac{\Sigma\,('X'_n \times 'A'_n)}{\Sigma\,'A'_n} = -0.1 \text{ ft.} \qquad 'Y'_c = \frac{\Sigma\,('Y'_n \times 'A'_n)}{\Sigma\,'A'_n} = 2.26 \text{ ft.}$$

STEP 2: Determine the height 'H' from groundline for the individual sign or the cluster.

Assume: Bay County, Wind Speed = 130 mph, 'A' = 1 ft., 'B' = 7 ft.

Calculated: X'_c = -0.1 ft., $'Y'_c$ = 'C' 2.26 ft.

Since X'_c = -0.1< 6", it is not a cantilever sign, only dark-bold lines in the table will be referenced to.

'H' = 'A' + 'B' + 'C' = 10.26 ft. ==> USE 11 ft. Σ ('A_n') = 15.4 ft.² ==> USE 16 ft.²

STEP 3: Select the appropriate Aluminum Column (Post) Selection Tables by Wind Speed and find the intersection point. See Sheet 3.

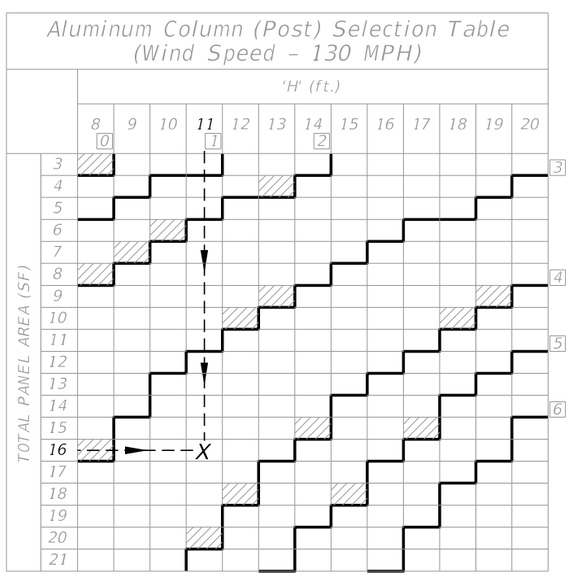

For WIND SPEED = 130 MPH,
'H' = 11 ft., Area = 16 ft.²

- Refer to the 130 mph Aluminum Column (Post) Selection Table, as copied from Sheet 3 and shown here.
- Using the 16 ft.² area on the left hand side of the table, go across to the 11 ft. height and find the cell marked with X.
- find the symbol [4] which the dark-bold line under the X cell leads to.
- In the Column (Post) and Foundation Table, the symbol [4] concludes that the design requires a 4.0" diameter and 0.25" thick Aluminum Column (Post) and a 2.0' diameter and 4.0' deep Concrete Foundation.

= If CANTILEVER SIGN configuration (see Cantilever Sign Details) falls in this region, use next larger Column (Post) size than that indicated.

STEP 4: Design the Column (Post) and the foundation according to the dark-bold lines or shaded area (if cantilever sign) in the Aluminum Column (Post) Selection Tables and Column (Post) and Foundation Table. For sign assemblies with signs oriented in two directions, only the sign with the largest area should be analyzed to determine the Column (Post) requirements.

GUIDE TO USE THIS STANDARD

SHEET NO.	CONTENTS
1	General Notes and Example
2	Centroid and Height
3	Column and Foundation Tables
4	Slip Base and Foundation Details
5	Driven Post and Soil Plate Details
6	Connection and Wind Beam
7, 8 & 9	Frequently Used Sign Clusters

GENERAL NOTES:

1. Design Wind Speed is determined by County (see WIND SPEEDS BY COUNTY)
2. Maximum sign area (single or cluster) is 30 sf.
3. Maximum sign width (X) single or cluster (including rotated sign panels) is 60 inches.
4. Shop drawings: Not required.
5. Aluminum Sign, Wind Beams and Column (Post) Materials:
   a. Aluminum Plates: ASTM B209, Alloy 6061-T6
   b. Aluminum Bars and Extruded Shapes: ASTM B221, Alloy 6061-T6
   c. Aluminum Structural Shapes: ASTM B308 Alloy 6061-T6
   d. Cast Aluminum: Alloy 356-T6
   e. Aluminum Weld Material: ER 5556
6. Sign Mounting Bolts (Screws), Nuts and Washers:
   a. Aluminum Button Head and Flat Head Bolts (Screws): ASTM F 468 Alloy 2024-T4
   b. Aluminum Hex Nuts: ASTM F467 Alloy 6061-T6 or 6262-T9
   c. Aluminum Washers: ASTM B221, Alloy 7075-T6
   d. Galvanized Steel U-Bolts: ASTM A 307 Grade A
   e. Galvanized Hex Nuts: ASTM A 563
7. Stainless Steel Bolts, Nuts and Washers may be used in lieu of the Aluminum button head and flat head Bolts (Screws) as follows:
   a. Stainless Steel Bolts (Screws): ASTM F 593 Alloy Group 2, Condition A, CW1 or SH1
   b. Stainless Steel Nuts: ASTM F594
8. Sign Column (Post) Bolts, Nuts and Washers:
   a. Galvanized Bolts (Sleeve): ASTM A307 with Galvanized Hex Nuts and Washers
   b. Aluminum Bolts (Sleeve): ASTM B221, Alloy 6061-T6 or 2024-T4 with Hex Nuts and Washers.
   c. Galvanized High Strength Hex Head Bolts (BaseBolts): ASTM A325 Type 1
   d. Galvanized Hex Nuts: ASTM A563 Grade DH
   e. Galvanized Washers: ASTM F436
9. Coatings:
   a. Aluminum Fasteners: Anodic coating (0.0002 inches min.) and chromate sealed
   b. High Strength Steel Bolts Nuts and Washers: ASTM F2329
   c. All other steel items (excluding stainless steel): Hot-dip Galvanize - ASTM A123
   d. Repair damaged galvanizing in accordance with Specification Section 562
10. BREAKAWAY SUPPORTS REQUIREMENTS: Install non-frangible aluminum column (post) (larger than 3½") with breakaway supports as shown on Sheet 5. Signs shielded by barrier wall or guardrail do not require breakaway support.

NOTES AND EXAMPLE

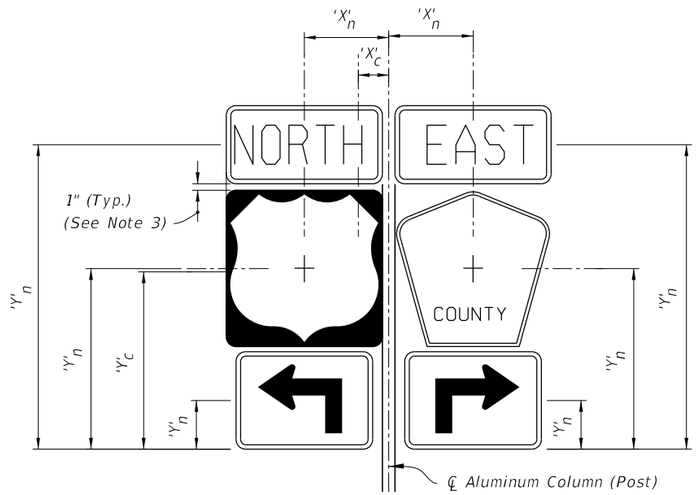

SIGN CLUSTER

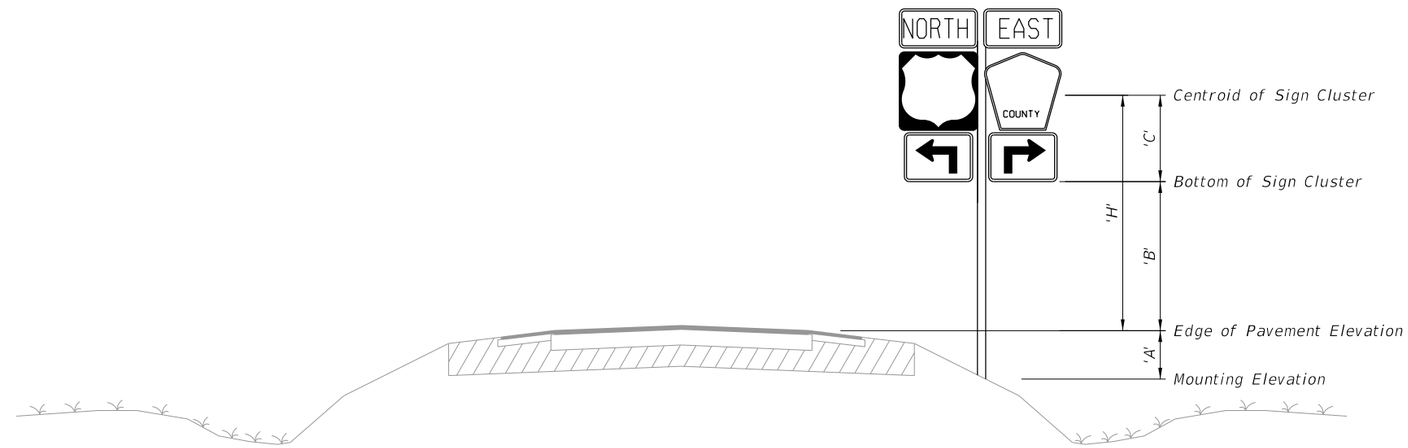

TYPICAL SECTION

$$'X'_c = \frac{\Sigma\,(\,'X'_n \times 'A'_n\,)}{\Sigma\,'A'_n} \qquad 'C' = 'Y'_c = \frac{\Sigma\,(\,'Y'_n \times 'A'_n\,)}{\Sigma\,'A'_n}$$

'A' = Height of the mounting elevation to the edge of pavement elevation

'A'$_n$ = Area of individual sign

'B' = Height of the edge of pavement elevation and the bottom of the sign or cluster

'C' = Height from the bottom of the sign or cluster to the centroid of the sign or cluster

h = Individual sign height

h/2 = ℄ Individual sign center

'H' = Height of sign or cluster centroid from groundline

X = Individual sign width

'X'$_c$ = Centroid horizontal location of sign or cluster from ℄ Aluminum Column (Post)

'Y'$_c$ = Centroid height of sign or cluster from bottom of sign cluster

'X'$_n$ = Individual sign centroid horizontal location from ℄ Aluminum Column (Post)

'Y'$_n$ = Individual Sign centroid height from bottom of sign cluster

NOTES:

1. For 'A' & 'B' see Index No. 17302 and Roadway Plans.
2. Do not exceed an area of 30 SF or a width of 60 inches for a sign or a sign cluster.
3. Vertical sign spacing (1" shown on Sign Cluster detail) also applies to rotated signs.

CALCULATION OF SIGN CLUSTER CENTROID

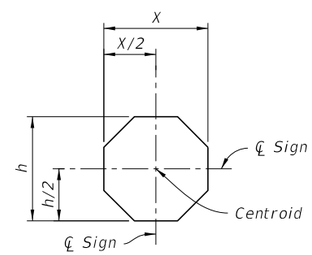

STOP

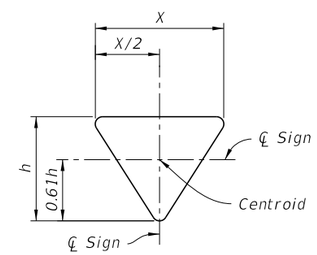

YIELD

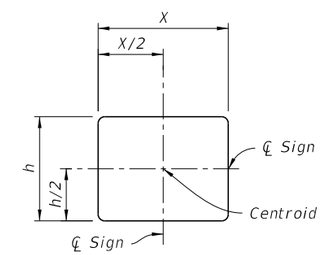

RECTANGLE

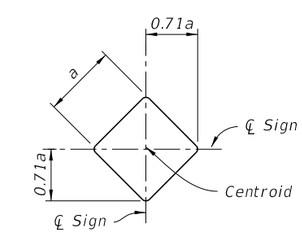

DIAMOND

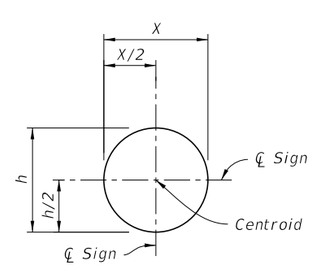

RAILROAD

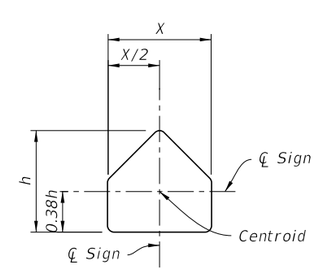

SCHOOL

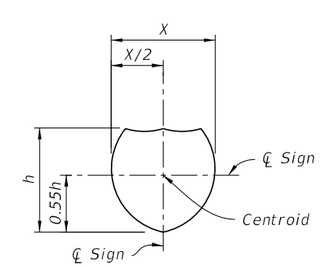

SHIELD

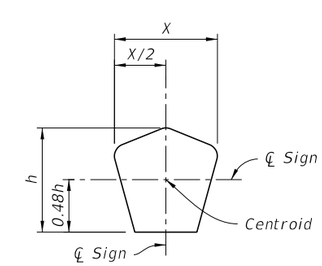

COUNTY

CENTROID AND HEIGHT

LAST REVISION	REVISION	DESCRIPTION:			INDEX NO.	SHEET NO.
07/01/15			FDOT FY 2016-17 DESIGN STANDARDS	SINGLE COLUMN GROUND SIGNS	11860	2 of 9

4/11/2016 2:15:30 PM

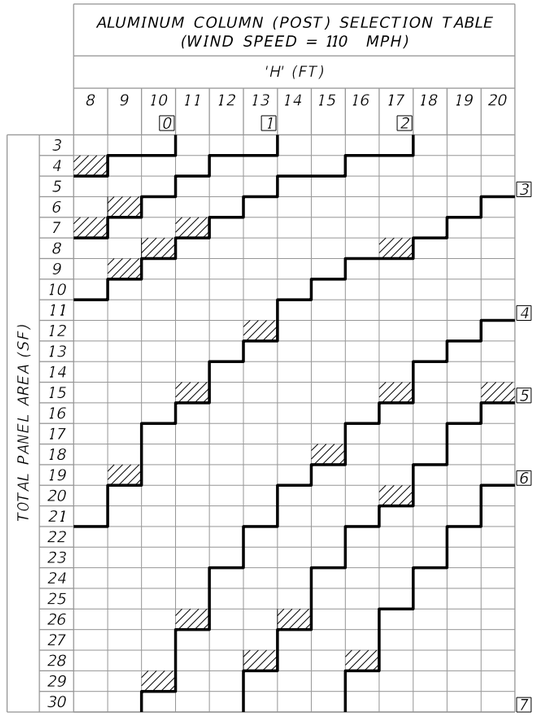

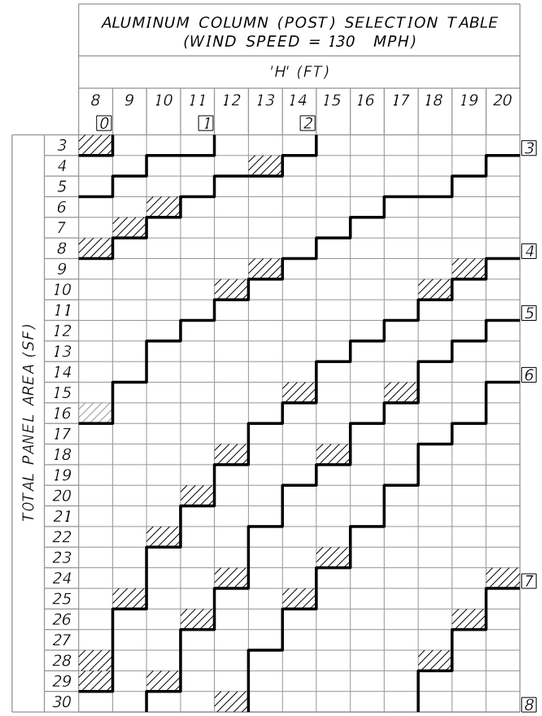

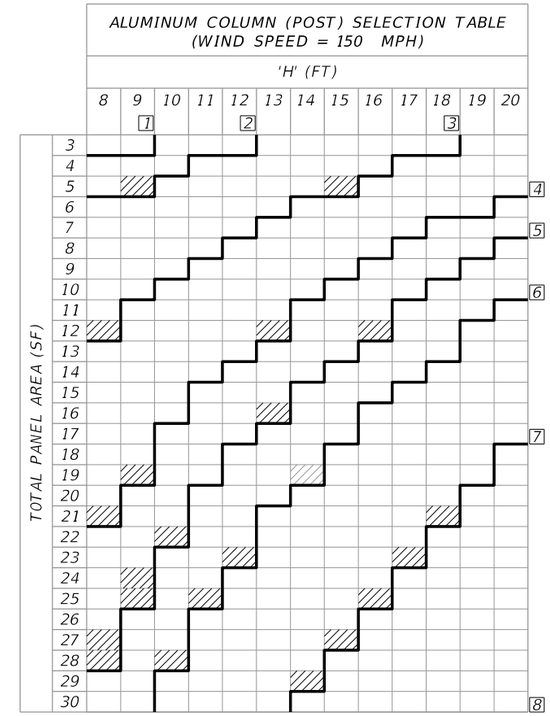

= If CANTILEVER SIGN configuration (see Cantilever Sign Details) falls in this region, use next larger Column (Post) size than that indicated.

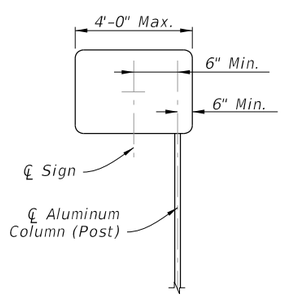

CANTILEVER SIGN

NOTE:

1. For cantilever sign installations see Index 17302.
2. For cantilever signs with widths greater than 4' see Index 11861.

COLUMN (POST) AND FOUNDATION TABLE

	Column (Post) Size		Foundation Alternatives				
			Driven Post *		Concrete (Class I)		
	Diameter (NPS) (in)	Wall Thk. (in)	Embedment Depth (ft) without Soil Plate	Embedment Depth (ft) with Soil Plate	Diameter (ft)	Embedment Depth (ft)	Stub Length (ft)
0	2.0	1/8	4.5	2.5	2.0	2.0	2.0
1	2.5	1/8	5.0	3.0	2.0	2.0	2.0
2	3.0	1/8	5.0	3.5	2.0	2.5	2.5
3	3.5	3/16	6.0	4.5	2.0	3.0	3.0
4	4.0	1/4	---	---	2.0	4.0	3.0
5	4.5	1/4	---	---	2.0	4.0	3.0
6	5.0	1/4	---	---	2.0	4.5	3.0
7	6.0	1/4	---	---	2.0	5.0	3.0
8	8.0	5/16	---	---	2.0	5.5	3.0

* INSTALLING FRANGIBLE COLUMN SUPPORTS:
Columns (posts) may be installed by driving the post or the posts may be set to the depth indicated in preformed holes backfilled with suitable material tamped in layers not thicker than 6" (to provide adequate compaction) or filled with flowable fill or bagged concrete.

WIND SPEEDS BY COUNTY:

110 MPH
Alachua, Baker, Bradford, Clay, Columbia, Gadsden, Gilchrist, Hamilton, Hardee, Jackson, Jefferson, Lafayette, Lake, Leon, Madison, Marion, Polk, Putnam, Sumter, Suwannee and Union counties.

130 MPH
Bay, Brevard, Calhoun, Charlotte, Citrus, De Soto, Dixie, Duval, Flagler, Franklin, Glades, Gulf, Hendry, Hernando, Highlands, Hillsborough, Holmes, Lee, Levy, Liberty, Manatee, Nassau, Okaloosa, Okeechobee, Orange, Osceola, Pasco, Pinellas, Sarasota, Seminole, St. Johns, Taylor, Volusia, Wakulla, Walton and Washington counties.

150 MPH
Broward, Collier, Escambia, Indian River, Martin, Miami-Dade, Monroe, Palm Beach, Santa Rosa and St. Lucie counties.

COLUMN AND FOUNDATION TABLES

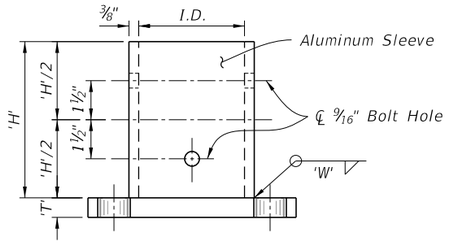

ELEVATION

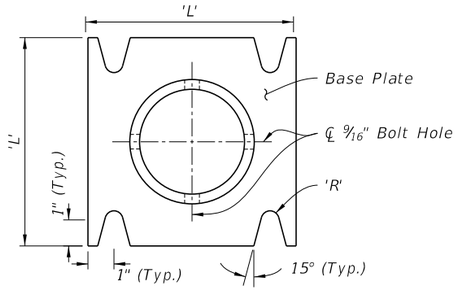

PLAN

SLEEVE & BASE PLATE DETAILS

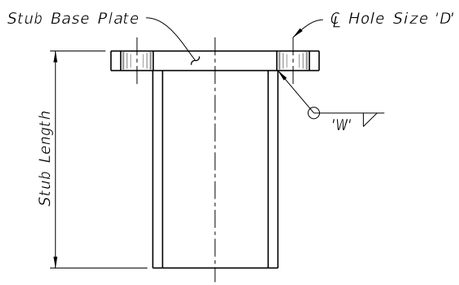

Stub Size Equals Min.
Sleeve Size Or Larger

STUB DETAIL

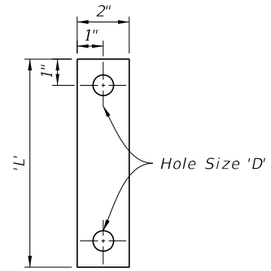

28 Ga. Thick Aluminum Strip
2 Reqd. Per Base

BOLT KEEPER PLATE DETAIL

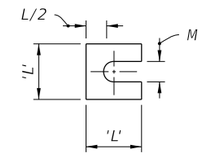

Provide 2- 0.0149" Thick (28 guage)
and 2- 0.0329" Thick (21 guage)
Brass Shims Per Post

SHIM DETAIL

Direction of Traffic

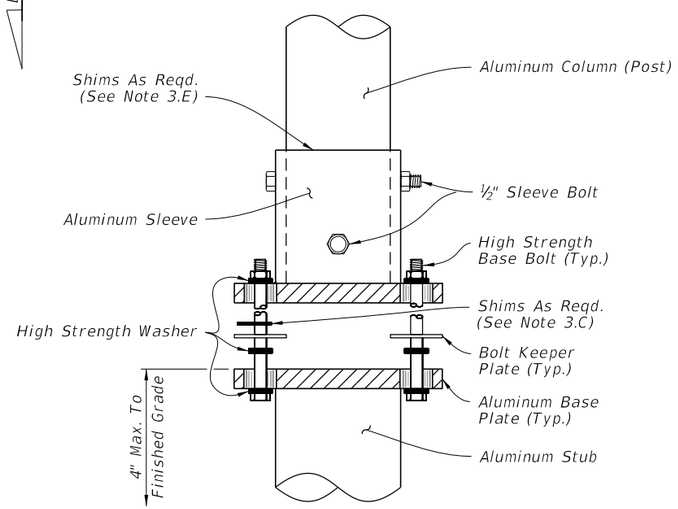

DETAIL 'A'

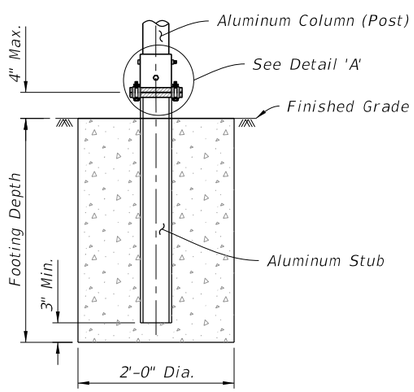

SLIP BASE AND FOOTING DETAIL
(Non-Frangible Column)

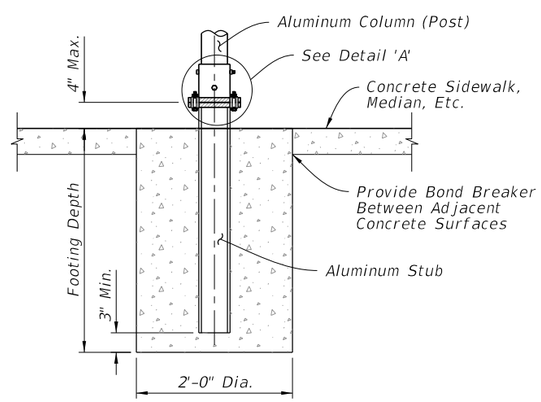

SLIP BASE AND FOOTING DETAIL IN CONCRETE
(Non-Frangible Column In Crossovers, Medians & Sidewalks)

NOTES:

1. Foundation Notes for Frangible Slip Base:

   A. Place Stub into concrete to diameter and depth shown in POST AND FOUNDATION TABLE using Class I Concrete.

2. Slip Base Fabrication Notes:

   A. The difference between the O.D. of the post and I.D. of the Sleeve must be 1/16" or less.

   B. Base Plate to Sleeve and Base Plate to Stub may be welded or cast.

   C. For cast base plates bolted to foundation stubs, use a foundation stub the same size as the sign column (Post).

3. Slip-Base Assembly Instructions:

   A. Assemble Slip Base connections in the following manner:
      1. Insert Post into Sleeve and connect using 2 ~ ½" diameter Sleeve Bolts.

      2. Assemble top base plate to bottom Base Plate using Base Bolts (High strength) with 3 washers per bolt. (See Detail 'A'):
         a. Place one washer on each Base Bolt between the bottom Base Plate and the Base Bolt head.
         b. Place the next washer between the Bottom Base Plate and the Bolt Keeper Plate.
         c. Add the top base plate section.
         d. Place the third washer between the Top Base Plate and the Nut.

   B. Orient the Bolt Keeper Plates in the Direction of Traffic.

   C. Use brass shims to plumb the post.

   D. Tighten Base Bolts as follows:
      1. Tighten Base Bolts to the maximum possible with a 12" to 15" wrench (this will bed the washers and shims and clear the bolt threads).
      2. Loosen each Base Bolt one turn.
      3. Under the supervision of the Engineer, use a calibrated wrench to tighten bolts to the torque prescribed in the SLIP BASE DETAILS Table. Over tightened Base Bolts are not permitted.
      4. Distort bolt threads at the junction with nuts to prevent loosening. Repair damaged galvanizing.

   E. Place galvanized steel shims between the Sleeve and Post to obtain a tight fit between the Post and Sleeve.

Column (Post) Size		SLIP BASE DETAILS												
Dia. (NPS) (in)	Wall Thk. (in)	Sleeve I.D. (Max.)	Sleeve Height 'H'	Weld 'W'	Base Plate 'L'	Base Plate 'T'	Radius 'R'	Base Bolt Size	Base Bolt Length	Base Plate Torque ft-lbs	Base Plate Torque in.-lbs		SHIM L	SHIM M
4	1/4	4 1/16	6	5/8	8	3/4	11/32	5/8	3	29	345	11/16	1 3/8"	11/16"
4½	1/4	4 9/16	6	5/8	8	7/8	11/32	5/8	3¼	29	345	11/16	1 3/8"	11/16"
5	1/4	5 1/16	7	5/8	8	7/8	11/32	5/8	3¼	29	345	11/16	1 3/8"	11/16"
6	1/4	6 1/16	8	11/16	9	1	13/32	3/4	3½	46	554	13/16	1 3/4"	13/16"
8	5/16	8 1/16	10	3/4	11	1	15/32	7/8	3¾	53	640	15/16	2 3/8"	1 1/16"

SLIP BASE AND FOUNDATION DETAILS

NOTES:

1. Align Soil Plate bottom at ⅔ of embedment depth.
2. Slot up to 1" long is allowed to accommodate various Column (Post) sizes.
3. Rectangular soil plate of size 1'-2" x 1'-0" may be used as an alternative.

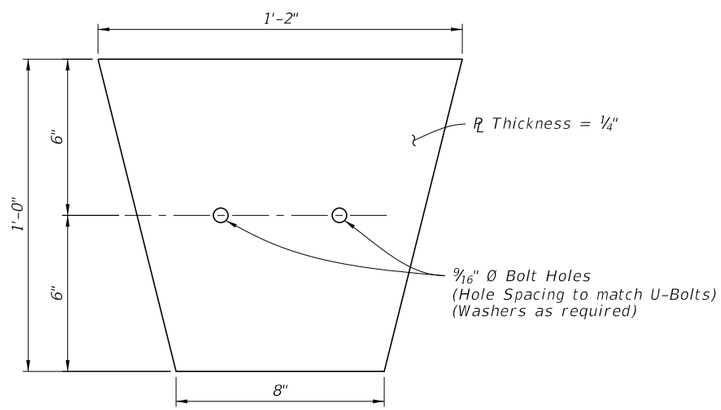

ALUMINUM SOIL PLATE DETAIL

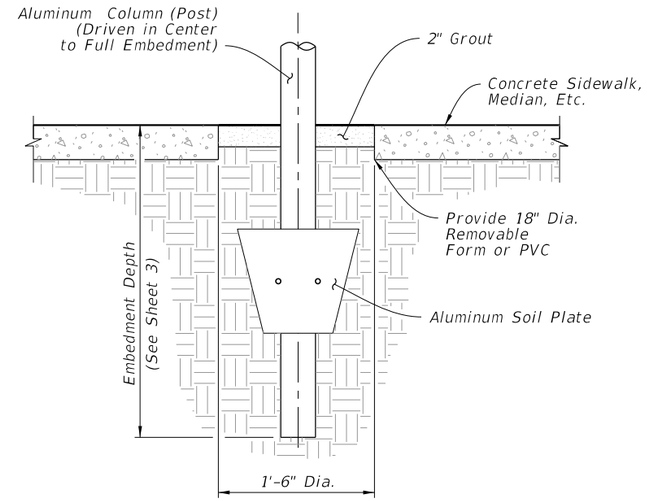

DRIVEN POST DETAIL
(Frangible Post In Crossovers, Medians & Sidewalks)

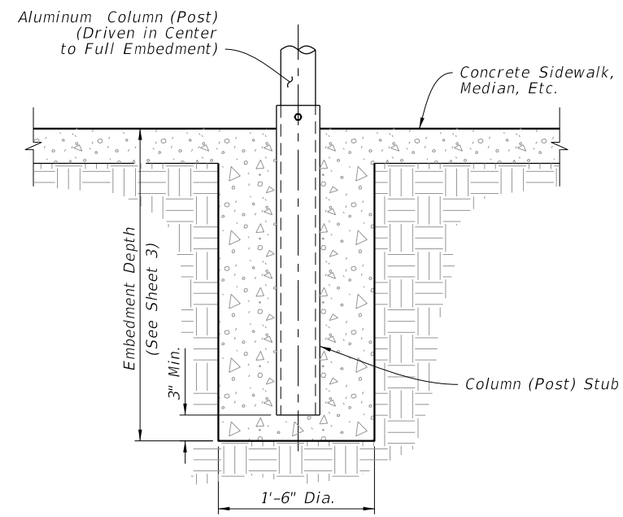

CONCRETE/STUB DETAIL
(Frangible Post In Crossovers, Medians & Sidewalks)

Note: Concrete foundation may be Class Non Structural
if poured monolithically with sidewalk or separator.

DRIVEN POST AND SOIL PLATE DETAIL

LAST REVISION	REVISION	DESCRIPTION:	FY 2016-17 DESIGN STANDARDS	SINGLE COLUMN GROUND SIGNS	INDEX NO.	SHEET NO.
07/01/15					11860	5 of 9

4/11/2016 2:15:33 PM

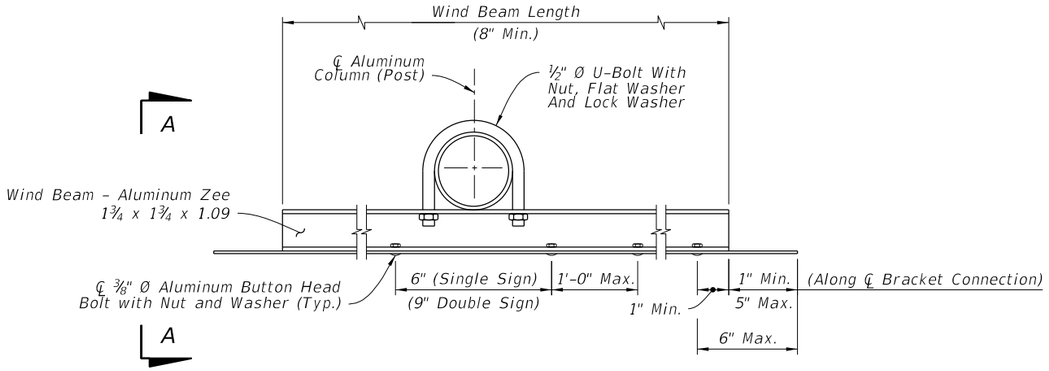

WIND BEAM CONNECTION NOTES:

1. 5/16" Ø Stainless Steel Hex Head Bolts with Flat Washer under Head and Lockwasher under Nut may be used in lieu of ⅜" Ø Aluminum Button Head Bolts.
2. Use Nylon washers (provided by the sheeting supplier) under the button bolt heads to protect sign sheeting.
3. Slots up to 1" long are allowed in wind beams to accommodate U-Bolts for varying Column (Post) diameters.
4. Wind beams may be oriented in either direction.

BRACKET DETAIL

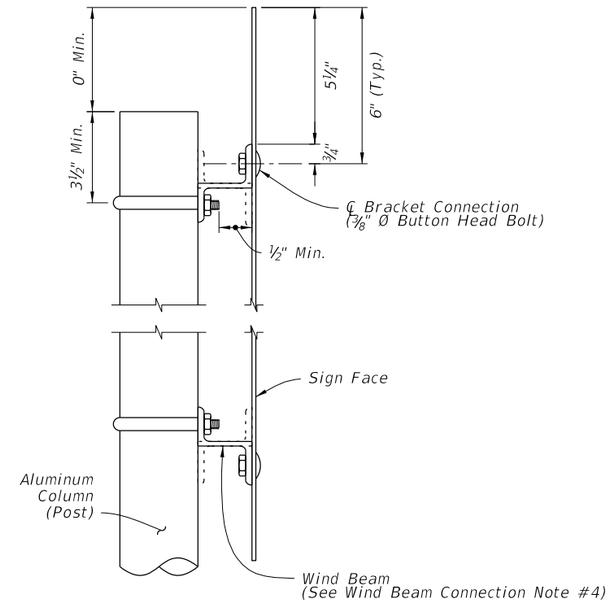

WIND BEAM CONNECTIONS DETAILS

SECTION A-A

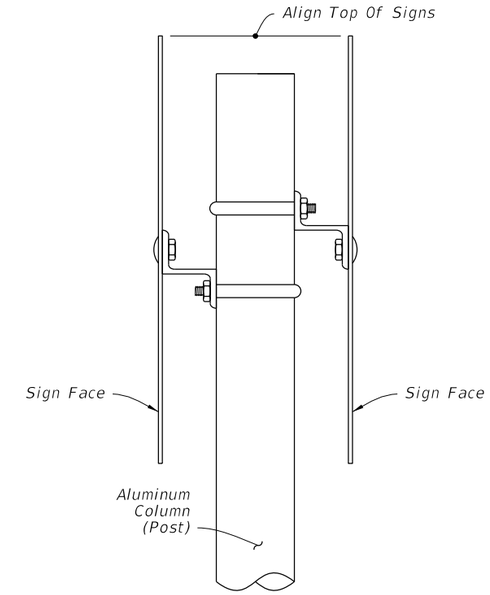

BACK-TO-BACK SIGN NOTE:

Use the area and the centroid location of the largest sign to determine aluminum column (post) size.

BACK-TO-BACK SIGN DETAIL

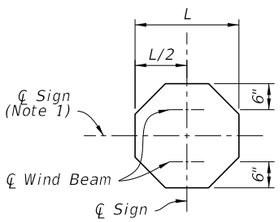

STOP

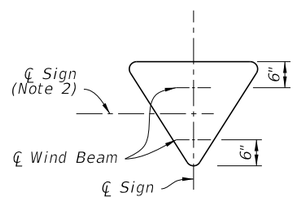

YIELD

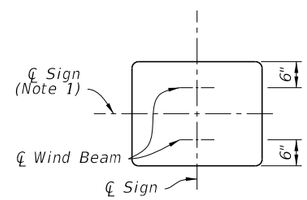

RECTANGLE

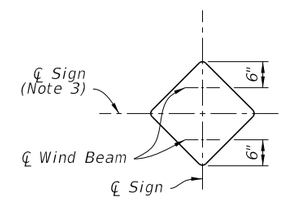

DIAMOND

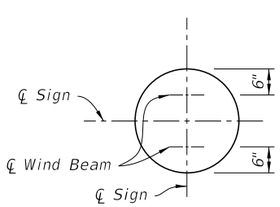

RAILROAD

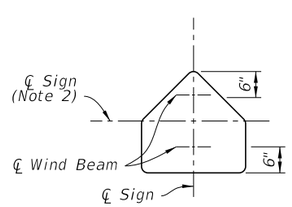

SCHOOL

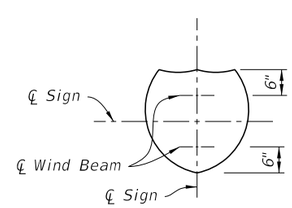

SHIELD

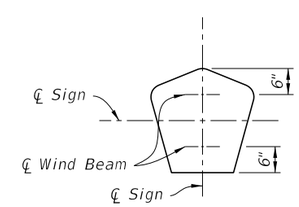

COUNTY

WIND BEAM PLACEMENT DETAILS

WIND BEAM PLACEMENT NOTES:

1. Install an additional third wind beam along the ℄ for signs with heights greater than 30" and less than 72". For rectangular signs greater than 72" maintain a maximum wind beam spacing of 2'-6", with the additional wind beams spaced evenly between the top and bottom wind beams. For rectangular signs up to 12" in height, use only one wind beam at ℄ Sign.
2. Install an additional third wind beam along the ℄ for Yield and School signs greater than 36".
3. Install an additional third wind beam along the ℄ for Diamond signs 30" or greater.

CONNECTION AND WIND BEAMS

LAST REVISION	REVISION	DESCRIPTION:			INDEX NO.	SHEET NO.
01/01/16			FY 2016-17 DESIGN STANDARDS	SINGLE COLUMN GROUND SIGNS	11860	6 of 9

4/11/2016 2:15:34 PM

Size	Area	Total Area	Centroid
36x12	3.00 SF	6.31 SF	1.75 Ft.
24x24	3.31 SF		

Size	Area	Total Area	Centroid
36x12	3.00 SF	8.18 SF	1.92 Ft.
30x30	5.18 SF		

Size	Area	Total Area	Centroid
36x12	3.00 SF	10.46 SF	2.10 Ft.
36x36	7.46 SF		

Size	Area	Total Area	Centroid
36x12	3.00 SF	16.25 SF	2.48 Ft.
48x48	13.25 SF		

Size	Area	Total Area	Centroid
24x24	3.31 SF	6.31 SF	1.71 Ft.
24x18	3.00 SF		

Size	Area	Total Area	Centroid
30x30	5.18 SF	10.18 SF	2.19 Ft.
30x24	5.00 SF		

Size	Area	Total Area	Centroid
36x36	7.46 SF	12.46 SF	2.55 Ft.
30x24	5.00 SF		

Size	Area	Total Area	Centroid
36x12	3.00 SF	13.18 SF	2.87 Ft.
30x30	5.18 SF		
30x24	5.00 SF		

Size	Area	Total Area	Centroid
36x12	3.00 SF	15.46 SF	3.15 Ft.
36x36	7.46 SF		
30x24	5.00 SF		

Size	Area	Total Area	Centroid
21x15	2.19 SF	6.19 SF	1.60 Ft.
24x24	4.00 SF		

Size	Area	Total Area	Centroid
21x15	2.19 SF	7.19 SF	1.52 Ft.
30x24	5.00 SF		

Size	Area	Total Area	Centroid
24x12	2.00 SF	6.00 SF	1.53 Ft.
24x24	4.00 SF		

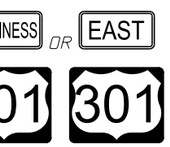

Size	Area	Total Area	Centroid
24x12	2.00 SF	7.00 SF	1.45 Ft.
30x24	5.00 SF		

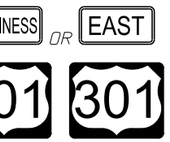

Size	Area	Total Area	Centroid
30x15	3.13 SF	8.13 SF	1.66 Ft.
30x24	5.00 SF		

Size	Area	Total Area	Centroid
24x24	4.00 SF	6.19 SF	1.73 Ft.
21x15	2.19 SF		

Size	Area	Total Area	Centroid
30x24	5.00 SF	7.19 SF	1.81 Ft.
21x15	2.19 SF		

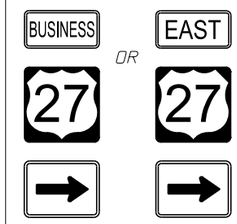

Size	Area	Total Area	Centroid
24x12	2.00 SF	8.19 SF	2.26 Ft.
24x24	4.00 SF		
21x15	2.19 SF		

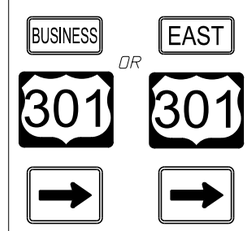

Size	Area	Total Area	Centroid
24x12	2.00 SF	9.19 SF	2.27 Ft.
30x24	5.00 SF		
21x15	2.19 SF		

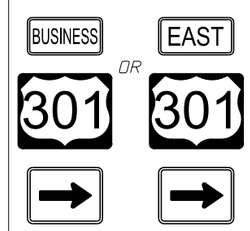

Size	Area	Total Area	Centroid
30x15	3.13 SF	10.32 SF	2.49 Ft.
30x24	5.00 SF		
21x15	2.19 SF		

Size	Area	Total Area	Centroid
24x12	2.00 SF	10.19 SF	2.80 Ft.
24x12	2.00 SF		
24x24	4.00 SF		
21x15	2.19 SF		

4/11/2016 2:15:35 PM

LAST REVISION	REVISION	DESCRIPTION:			INDEX NO.	SHEET NO.
07/01/15			FY 2016-17 DESIGN STANDARDS	SINGLE COLUMN GROUND SIGNS	11860	7 of 9

Size	Area	Total Area	Centroid
24x12	2.00 SF	11.19 SF	2.76 Ft.
24x12	2.00 SF		
30x24	5.00 SF		
21x15	2.19 SF		

Size	Area	Total Area	Centroid
30x15	3.13 SF	13.45 SF	3.16 Ft.
30x15	3.13 SF		
30x24	5.00 SF		
21x15	2.19 SF		

Size	Area	Total Area	Centroid
21x15	2.19 SF	3.90 SF	1.57 Ft.
18x18	1.71 SF		

Size	Area	Total Area	Centroid
21x15	2.19 SF	5.22 SF	1.72 Ft.
24x24	3.03 SF		

Size	Area	Total Area	Centroid
21x15	2.19 SF	6.95 SF	1.87 Ft.
30x30	4.76 SF		

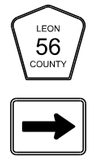

Size	Area	Total Area	Centroid
18x18	1.71 SF	3.90 SF	1.26 Ft.
21x15	2.19 SF		

Size	Area	Total Area	Centroid
24x24	3.03 SF	5.22 SF	1.62 Ft.
21x15	2.19 SF		

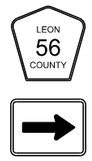

Size	Area	Total Area	Centroid
30x30	4.76 SF	6.95 SF	1.97 Ft.
21x15	2.19 SF		

Size	Area	Total Area	Centroid
24x12	2.00 SF	9.39 SF	2.87 Ft.
24x12	2.00 SF		
24x24	3.20 SF		
21x15	2.19 SF		

Size	Area	Total Area	Centroid
24x12	2.00 SF	10.18 SF	2.84 Ft.
24x12	2.00 SF		
30x24	3.99 SF		
21x15	2.19 SF		

Size	Area	Total Area	Centroid
30x15	3.13 SF	12.44 SF	3.26 Ft.
30x15	3.13 SF		
30x24	3.99 SF		
21x15	2.19 SF		

Size	Area	Total Area	Centroid
21x15	2.19 SF	5.39 SF	1.75 Ft.
24x24	3.20 SF		

Size	Area	Total Area	Centroid
21x15	2.19 SF	6.18 SF	1.67 Ft.
30x24	3.99 SF		

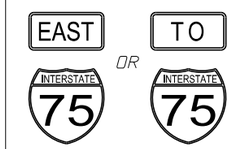

Size	Area	Total Area	Centroid
24x12	2.00 SF	5.20 SF	1.67 Ft.
24x24	3.20 SF		

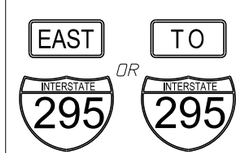

Size	Area	Total Area	Centroid
24x12	2.00 SF	5.99 SF	1.60 Ft.
30x24	3.99 SF		

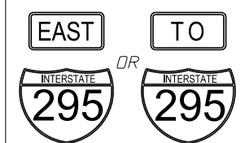

Size	Area	Total Area	Centroid
30x15	3.13 SF	7.12 SF	1.81 Ft.
30x24	3.99 SF		

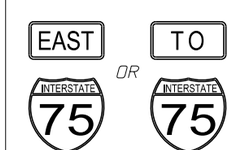

Size	Area	Total Area	Centroid
30x15	3.13 SF	10.33 SF	2.27 Ft.
36x36	7.20 SF		

4/11/2016 2:15:35 PM

LAST REVISION	REVISION	DESCRIPTION:			INDEX NO.	SHEET NO.
07/01/15			FY 2016-17 DESIGN STANDARDS	SINGLE COLUMN GROUND SIGNS	11860	8 of 9

Size	Area	Total Area	Centroid
30x15	3.13 SF	12.12 SF	2.18 Ft.
45x36	8.99 SF		

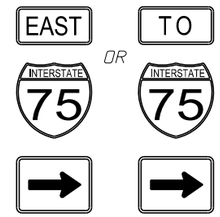

Size	Area	Total Area	Centroid
24x12	2.00 SF	7.39 SF	2.30 Ft.
24x24	3.20 SF		
21x15	2.19 SF		

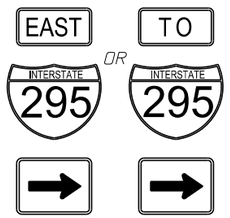

Size	Area	Total Area	Centroid
24x12	2.00 SF	8.18 SF	2.31 Ft.
30x24	3.99 SF		
21x15	2.19 SF		

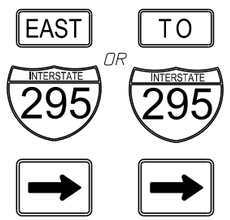

Size	Area	Total Area	Centroid
30x15	3.13 SF	9.31 SF	2.55 Ft.
30x24	3.99 SF		
21x15	2.19 SF		

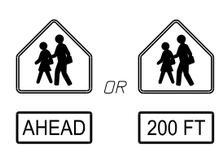

Size	Area	Total Area	Centroid
30x30	4.69 SF	6.69 SF	1.61 Ft.
24x12	2.00 SF		

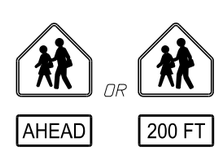

Size	Area	Total Area	Centroid
30x30	4.69 SF	8.44 SF	1.77 Ft.
30x18	3.75 SF		

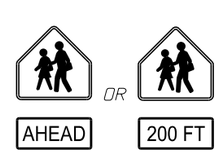

Size	Area	Total Area	Centroid
36x36	6.75 SF	10.50 SF	2.06 Ft.
30x18	3.75 SF		

Size	Area	Total Area	Centroid
30X30	4.69 SF	6.69 SF	1.61 Ft.
24X12	2.00 SF		

Size	Area	Total Area	Centroid
30X30	4.69 SF	8.44 SF	1.77 Ft.
30X18	3.75 SF		

Size	Area	Total Area	Centroid
36X36	6.75 SF	10.50 SF	2.06 Ft.
30X18	3.75 SF		

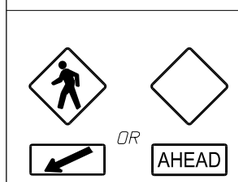

Size	Area	Total Area	Centroid
30X30	6.25 SF	8.25 SF	2.28 Ft.
24X12	2.00 SF		

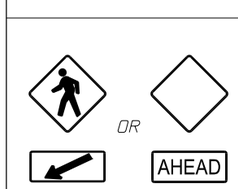

Size	Area	Total Area	Centroid
36X36	9.00 SF	12.75 SF	2.84 Ft.
30X18	3.75 SF		

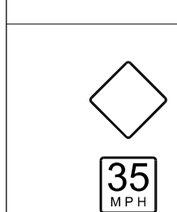

Size	Area	Total Area	Centroid
30X30	6.25 SF	10.25 SF	2.74 Ft.
24X24	4.00 SF		

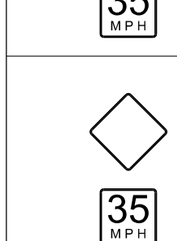

Size	Area	Total Area	Centroid
36X36	9.00 SF	15.25 SF	3.29 Ft.
30X30	6.25 SF		

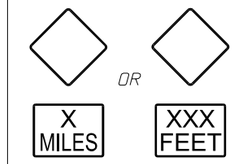

Size	Area	Total Area	Centroid
30X30	6.25 SF	9.25 SF	2.51 Ft.
24X18	3.00 SF		

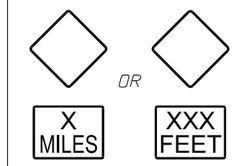

Size	Area	Total Area	Centroid
36X36	9.00 SF	14.00 SF	3.06 Ft.
30X24	5.00 SF		

4/11/2016 2:15:36 PM

LAST REVISION	REVISION	DESCRIPTION:	FY 2016-17 DESIGN STANDARDS	SINGLE COLUMN GROUND SIGNS	INDEX NO.	SHEET NO.
07/01/15					11860	9 of 9

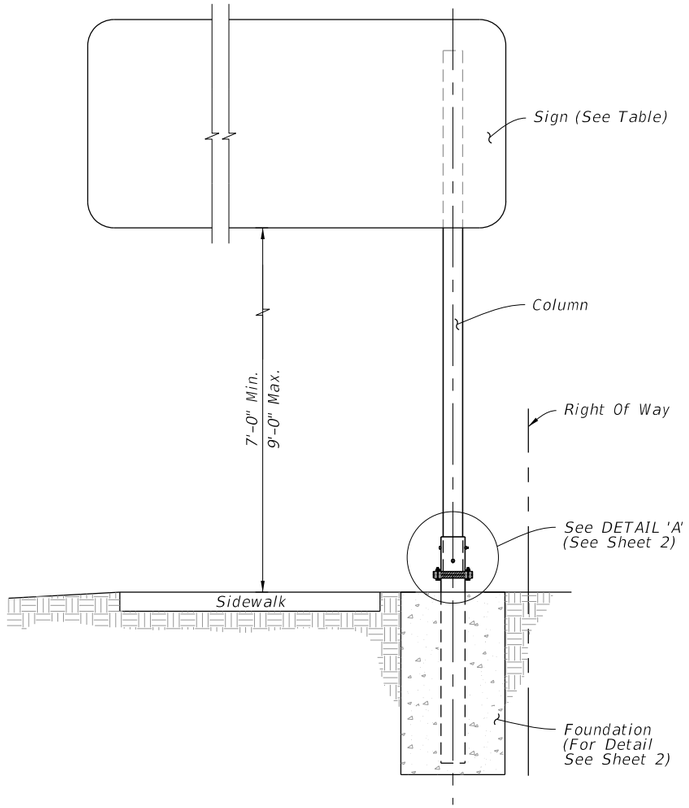

TYPICAL SECTION

GENERAL NOTES:

1. Refer to FDOT Design Standards Index No. 11860 for additional notes, assembly of base connection and material specifications not given in this Index.
2. Sleeve Bolts: ASTM A-307, ½" Ø galvanized steel bolt (with lock nuts) or ASTM B-211 Alloy 2024-T4 or 6061-T6.
3. Place galvanized steel shims between the Sleeve and Post to obtain a tight fit between the Post and Sleeve.
4. Wind Beam and Vertical Brace: Aluminum Z 3" x 2 11/16" x 3.38. Install Vertical Brace on 7'-0" to 8'-0" signs only.
5. Provide 2- 0.0149" Thick (28 guage) and 2- 0.0329" Thick (21 guage) Brass Shims Per Post. Used brass shims to plumb the post.

COLUMN SELECTION AND FOOTING SIZE TABLE

Sign Size Height x Length	Column Size Diameter x Thickness	Sleeve Size Diameter x Thickness	U-bolt Diameter	Base Bolt Diameter x Length	Torque lbs./in	Base Plate Thickness	Footing Depth
4'-0" x 5'-0"	4.5" x 0.337" (Schedule 80)	5.563" x 0.5" (Schedule 120)	½"	⅝" x 3½"	270 +/- 45	1"	6'-0"
4'-0" x 6'-0"							
4'-0" x 7'-0"	5.563" x 0.375" (Schedule 80)	6.625" x 0.432" (Schedule 80)	⅝"	¾" x 4"	445 +/- 75	1⅛"	6'-6"
4'-0" x 8'-0"							7'-0"

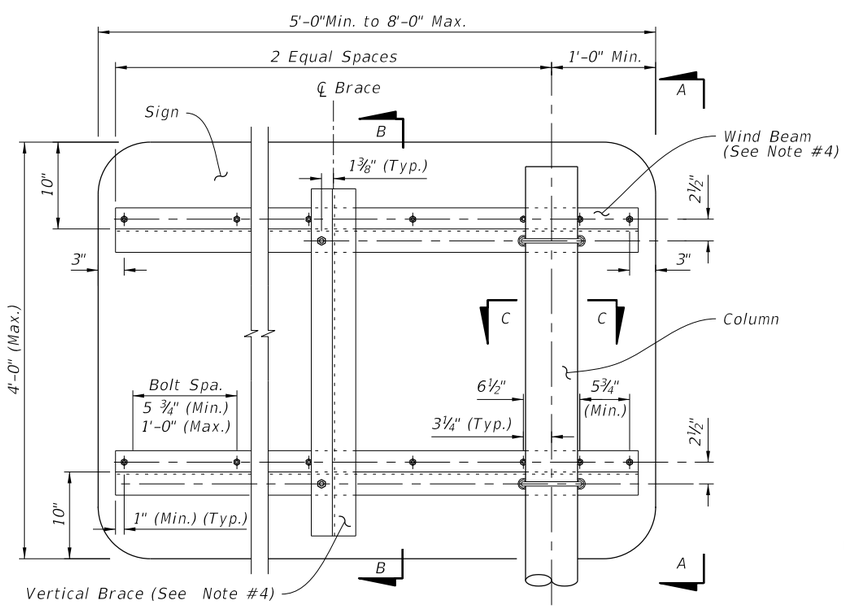

SIGN DETAIL

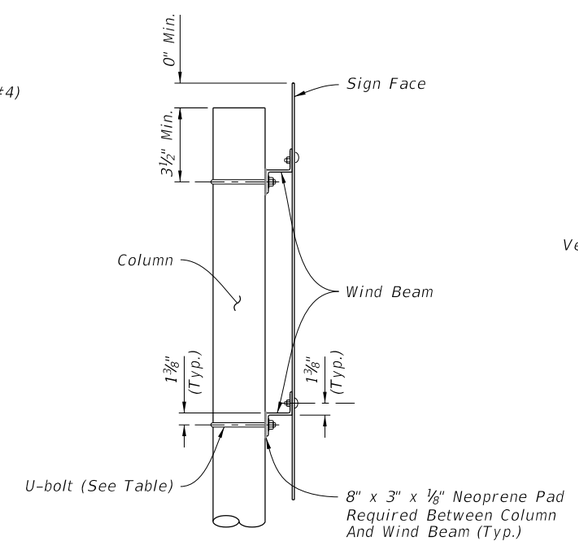

SECTION A-A

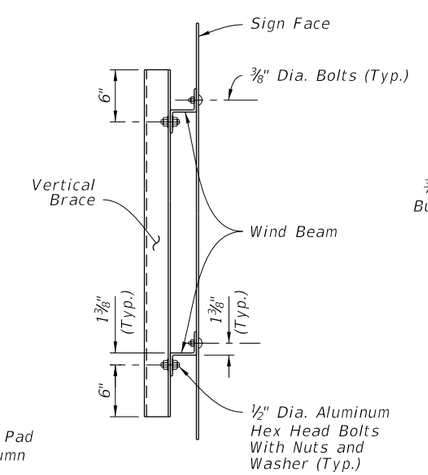

SECTION B-B

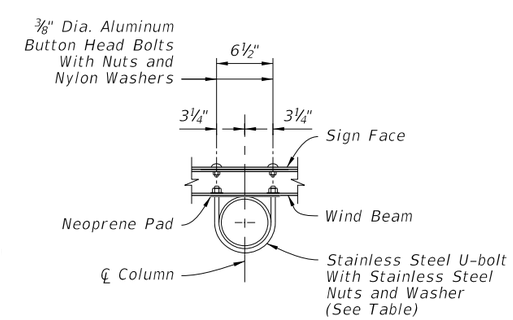

SECTION C-C

LAST REVISION	REVISION	DESCRIPTION:			INDEX NO.	SHEET NO.
07/01/15			FY 2016-17 DESIGN STANDARDS	SINGLE COLUMN CANTILEVER GROUND MOUNTED SIGN	11861	1 of 2

12/3/2015 11:44:18 AM

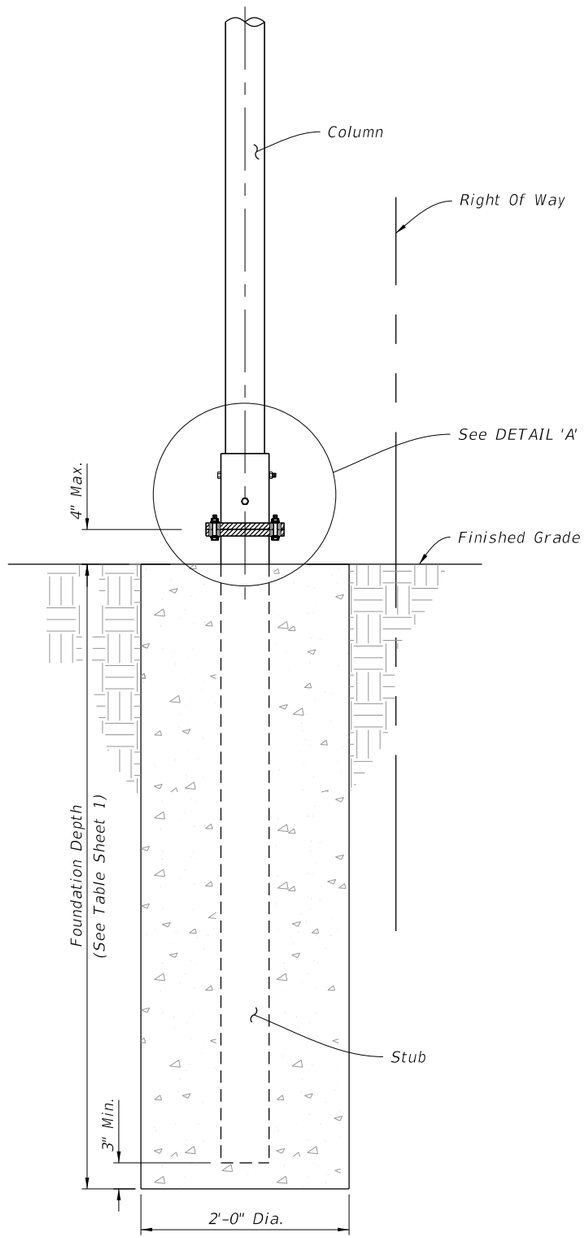

BASE AND FOUNDATION DETAIL

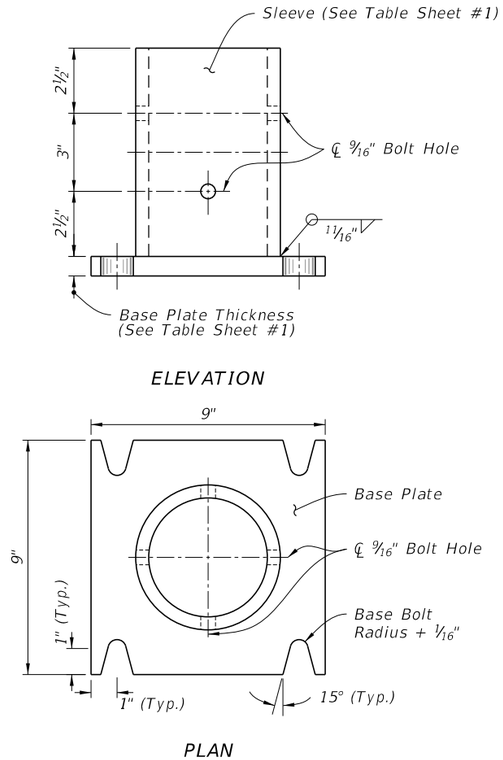

SLEEVE & BASE PLATE DETAILS

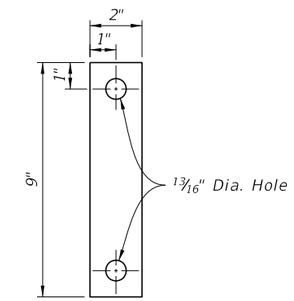

28 Ga. Thick Aluminum Strip
2 Required Per Base

BOLT KEEPER PLATE DETAIL

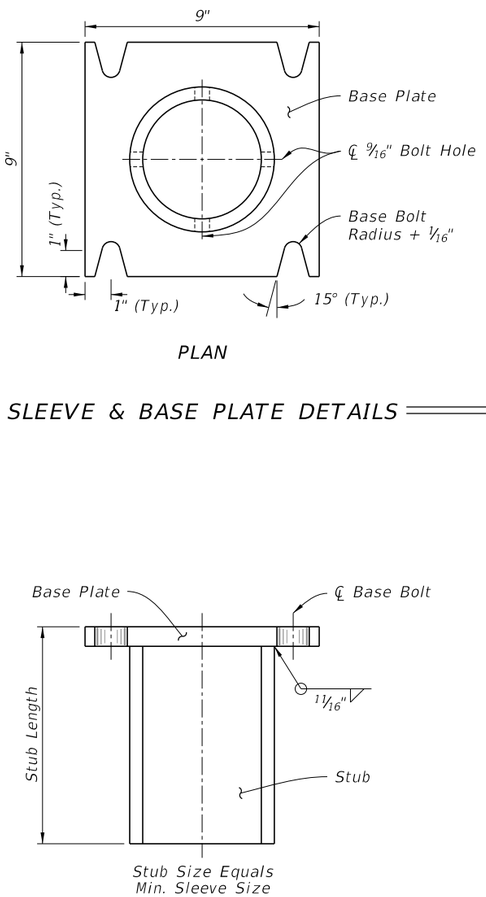

STUB DETAIL

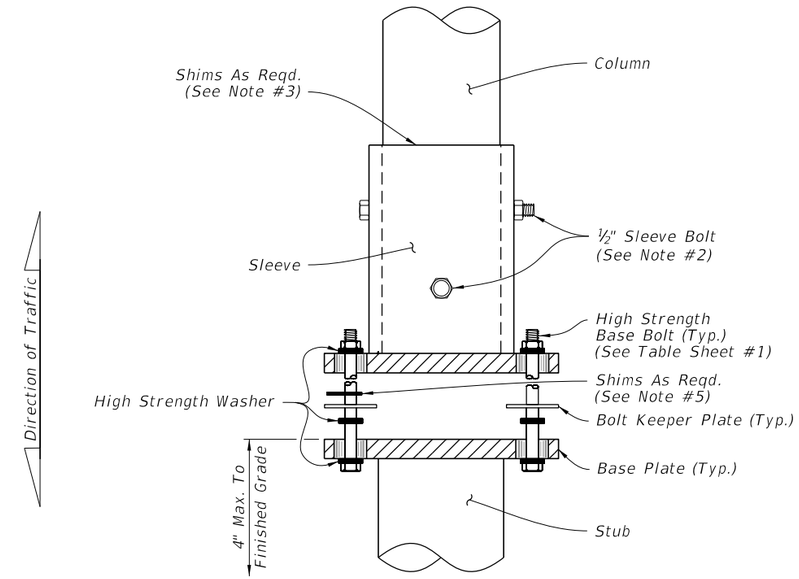

DETAIL 'A'

12/3/2015 11:44:18 AM

LAST REVISION	REVISION	DESCRIPTION:			INDEX NO.	SHEET NO.
07/01/15			FDOT FY 2016-17 DESIGN STANDARDS	SINGLE COLUMN CANTILEVER GROUND MOUNTED SIGN	11861	2 of 2

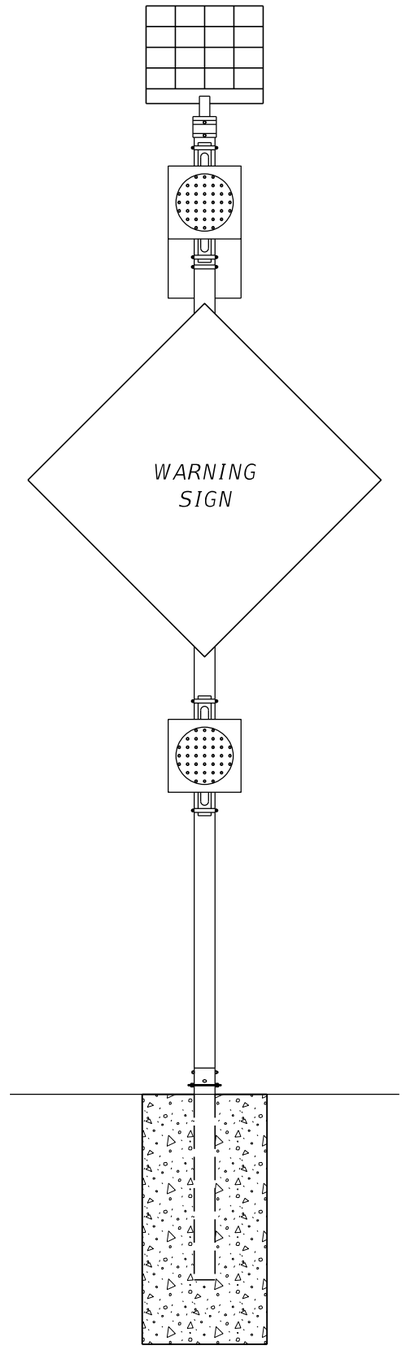

SOLAR POWERED BEACON

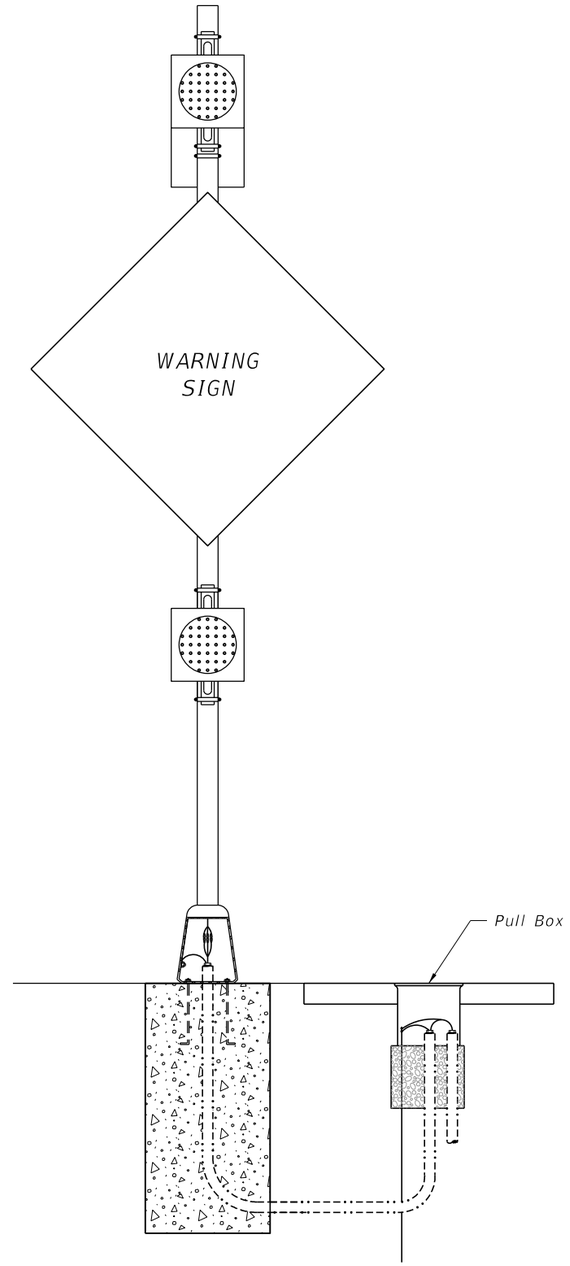

CONVENTIONAL POWERED BEACON

GENERAL NOTES

1. ALUMINUM: Aluminum materials shall meet the requirements of Aluminum Association Alloy 6061-T6 (ASTM B209, B221, B308 or B429), except as noted.
2. Sign panel, wind beam and columns shall be installed in accordance with Index 11860 and Section 700 of the Specifications.
3. Height and offset to sign column shall be in accordance with Index 17302.
4. When aluminum column (posts) are installed with a frangible pedestal pole bases, engage all threads on the pedestal pole base and pipe unless the pipe is fully seated into base.
5. Aluminum poles and transformer bases shall meets the requirements of Section 646 of the Specifications.
6. A concrete slab shall be installed around all flashing beacon assemblies installed on slopes 6:1 or greater. Minimum dimension of slab shall be 4'-0" by 5'-0".
7. A concrete slab shall be installed around all pull boxes. Minimum dimension of slab shall be 4'-0" by 4'-0". In urban areas where space is limited slab dimensions may be adjusted as shown in the plans.
8. For beacon assemblies connected to conventional power, provide single pole non-fused watertight breakaway electrical connectors in the frangible pedestal pole base.
9. Connection of controller cabinet and solar panel to the column shall be in accordance with manufacturer's recommendations.
10. Holes drilled in sign column for wire entry shall use a bushing or rubber grommet to protect conductors.
11. Orient solar panel to face South for optimal exposure to sunlight.

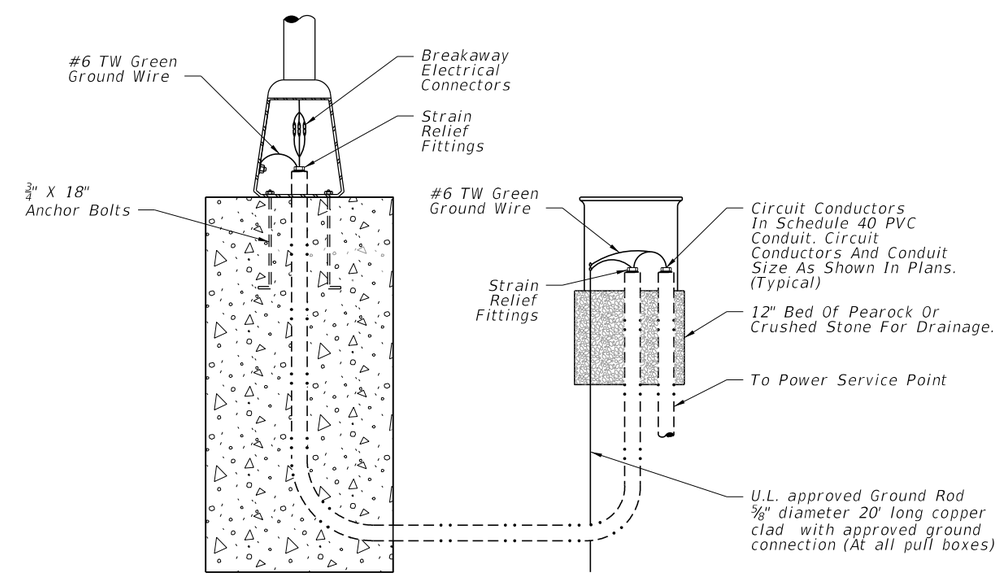

POLE WIRING DETAIL
CONVENTIONAL POWERED BEACON

12/7/2015 9:34:47 AM

LAST REVISION	REVISION	DESCRIPTION:			INDEX NO.	SHEET NO.
12/15/14			FDOT FY 2016-17 DESIGN STANDARDS	ROADSIDE FLASHING BEACON ASSEMBLY	11862	1 of 7

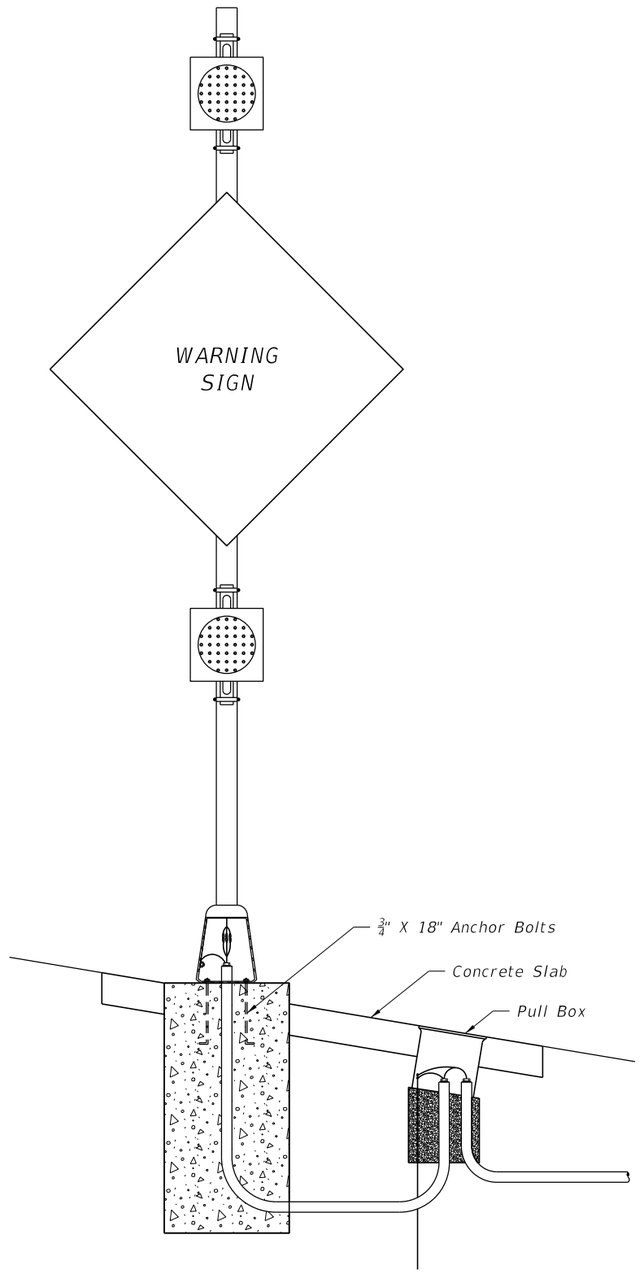

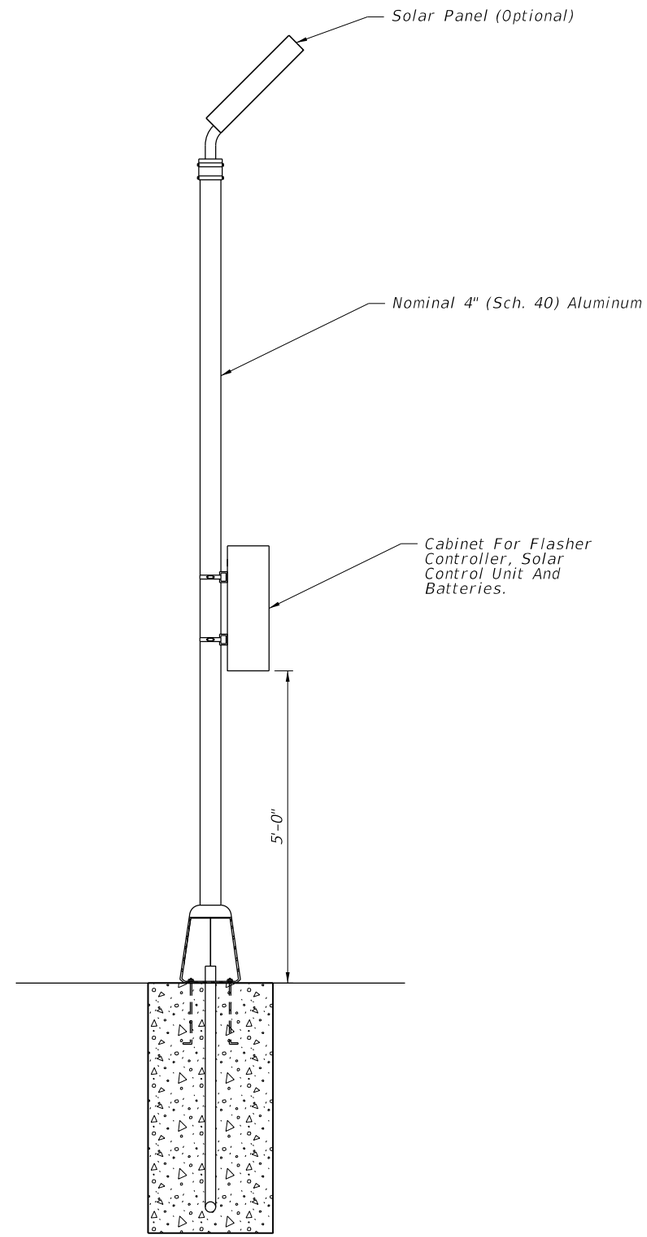

SOLAR POWERED BEACON WITH AUXILLIARY POLE FOR
SOLAR PANEL, CONTROLLER AND BATTERIES

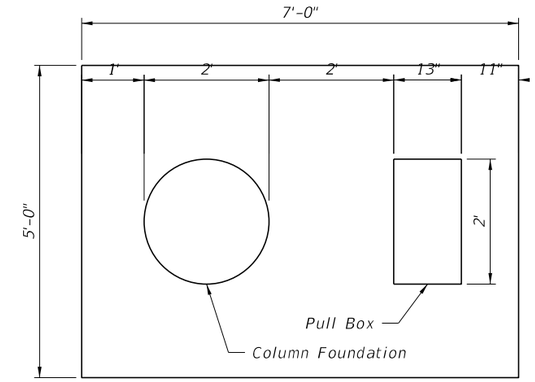

CONCRETE SLAB DETAIL

NOTES

1. All flashing beacon assemblies with solar panels, controllers and batteries weighing more than 170 lbs. shall utilize a separate pole for mounting the solar panel, controller and batteries.

2. The auxillary pole shall be installed outside the recoverable terrain distance and as near the right of way as possible. The recoverable terrain distance shall comply with Design Standard Index 700.

3. Auxilliary pole shall be the same length as the column for the beacon assembly.

3. Payment for the separate pole, foundation, conduit and wiring shall be included in the cost of the electronic warning sign with flashing beacon.

12/3/2015 11:44:20 AM

LAST REVISION	REVISION	DESCRIPTION:			INDEX NO.	SHEET NO.
07/01/15			FDOT FY 2016-17 DESIGN STANDARDS	ROADSIDE FLASHING BEACON ASSEMBLY	11862	2 of 7

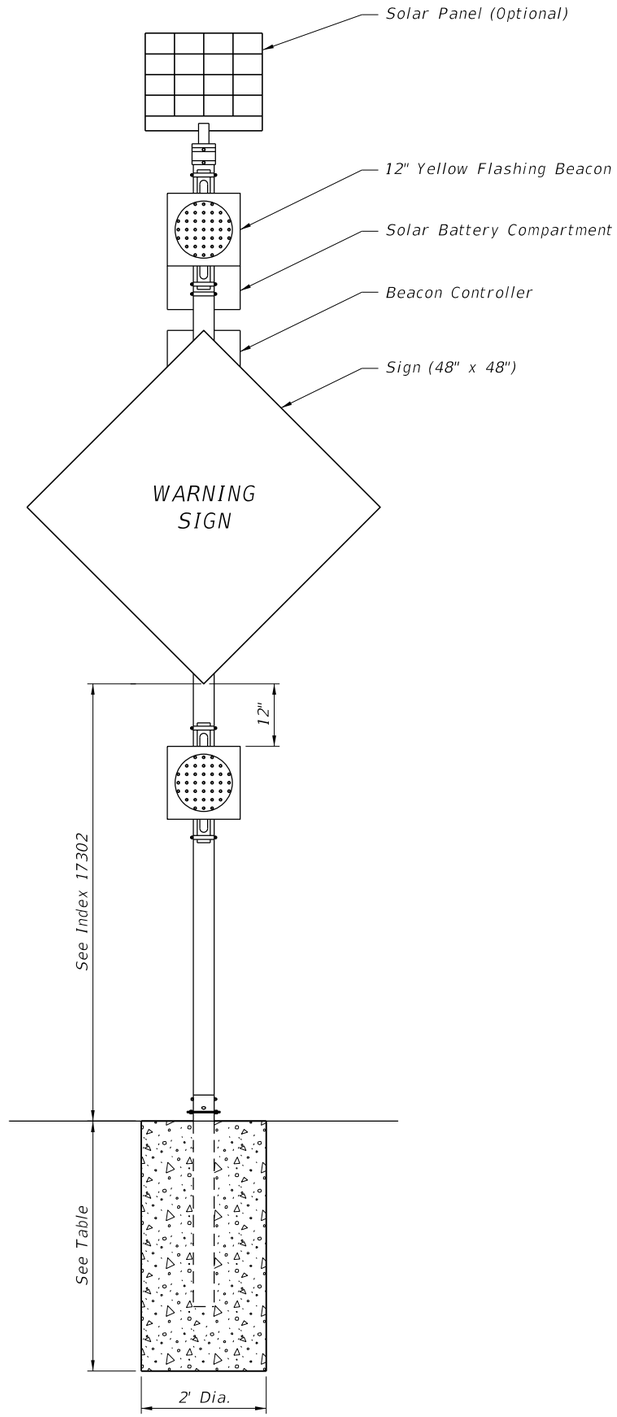

FRONT VIEW

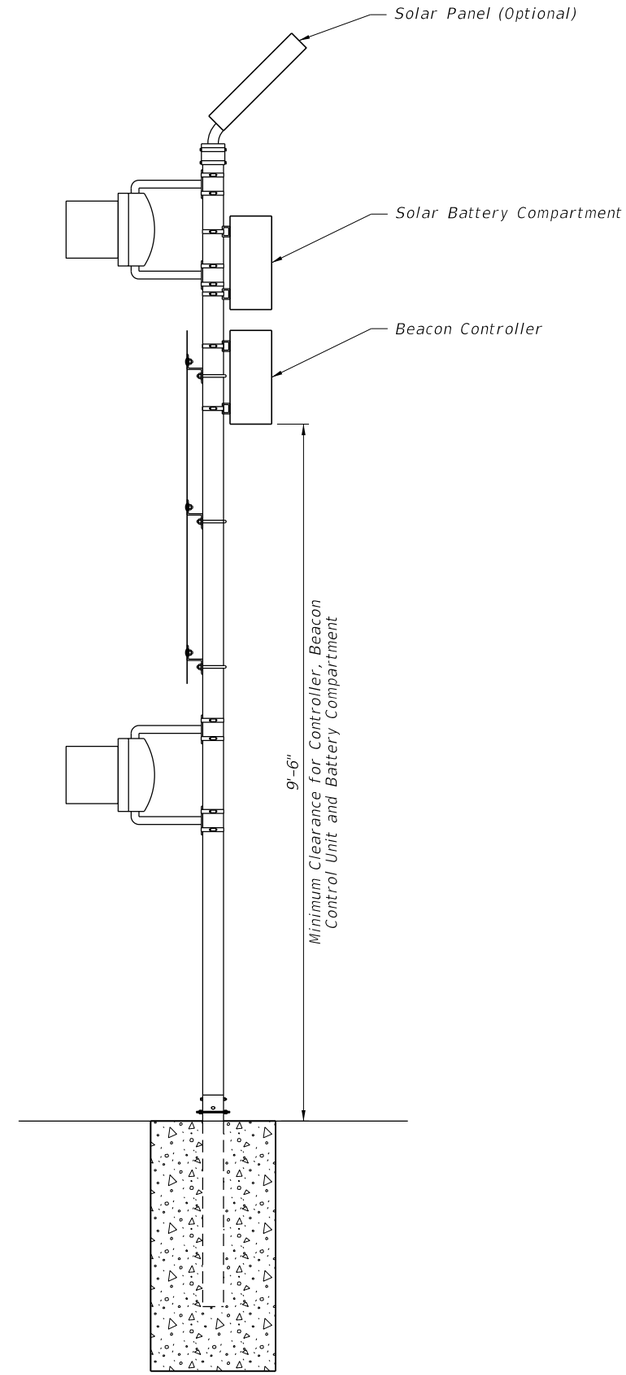

SIDE VIEW

STANDARD WARNING SIGN COLUMN SIZE			
Wind Speed	Sign Height	Column Size	Footing Depth
110	7'	4"	4'
130	7'	4.5"	4'
150	7'	5"	4.5'
110	8.5'	4.5"	4'
130	8.5'	5"	4.5'
150	8.5'	6"	5'

NOTES

1. Details show a typical warning sign with two flashing beacon heads. When only one beacon is required, install upper beacon.
2. Sign column slip base shall be in accordance with Design Standard Index 11860.
3. Beacon and beacon controllers shall be listed on Approved Products List (APL).

SOLAR POWERED WARNING SIGN DETAILS

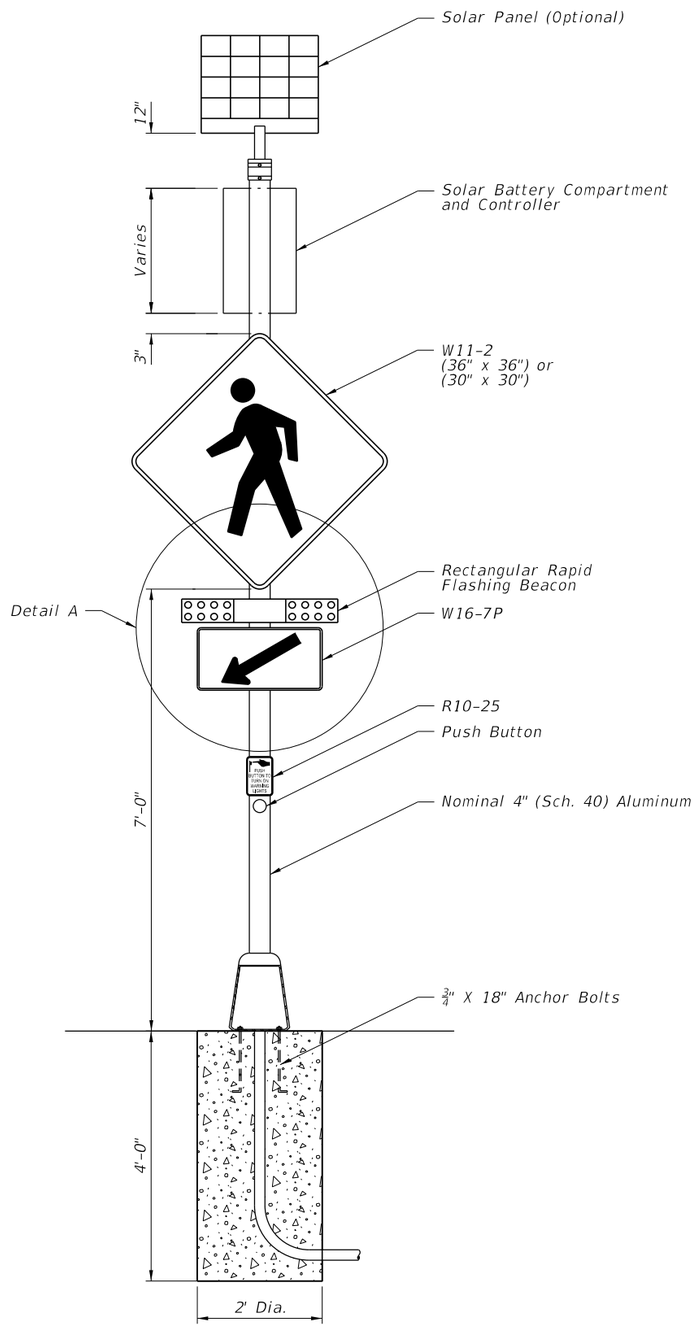

FRONT VIEW

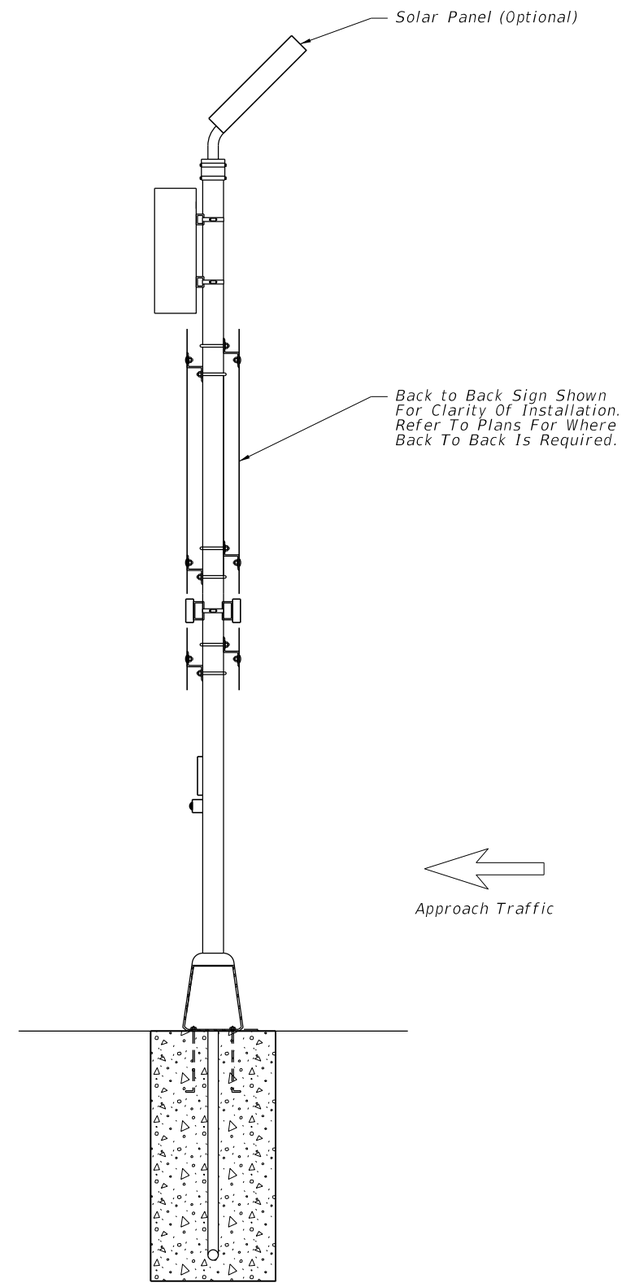

SIDE VIEW

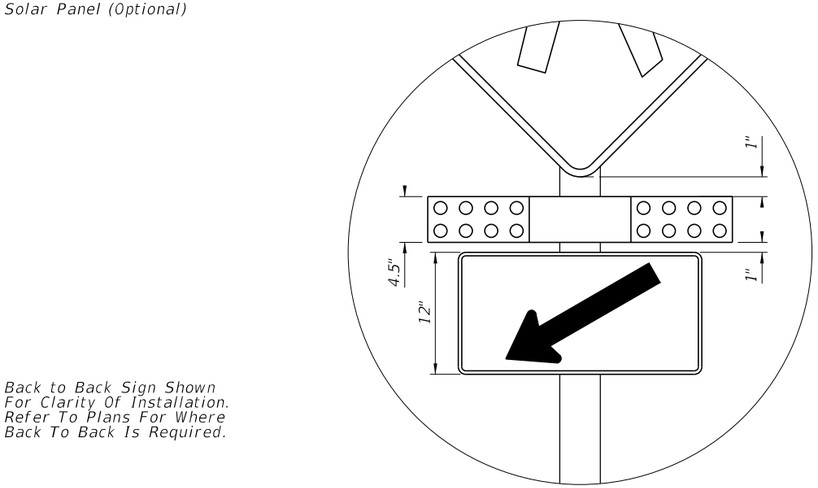

DETAIL A

NOTES

1. Rectangular Rapid Flashing Beacon (RRFB) shall always be installed in pairs, one on either side of approach traffic.
2. Controller shall be installed on the backside of post from approach traffic.
3. All RRFB equipment and hardware shall be listed on the Approved Products List (APL).
4. The W11-2 sign shall be 30" X 30" for single lane facilities and a 36" X 36" sign for multi-lane facilities.

RECTANGULAR RAPID FLASHING BEACON DETAILS

LAST REVISION	REVISION	DESCRIPTION:	FY 2016-17 DESIGN STANDARDS	ROADSIDE FLASHING BEACON ASSEMBLY	INDEX NO.	SHEET NO.
07/01/15					11862	4 of 7

12/3/2015 11:44:21 AM

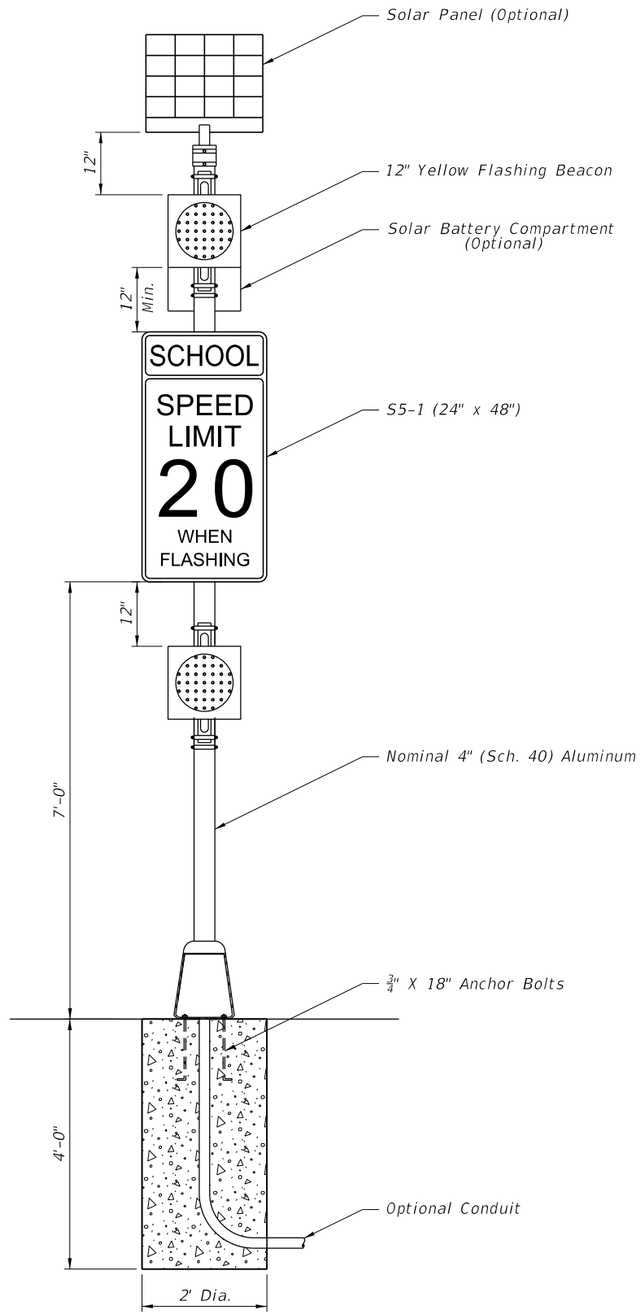

FRONT VIEW

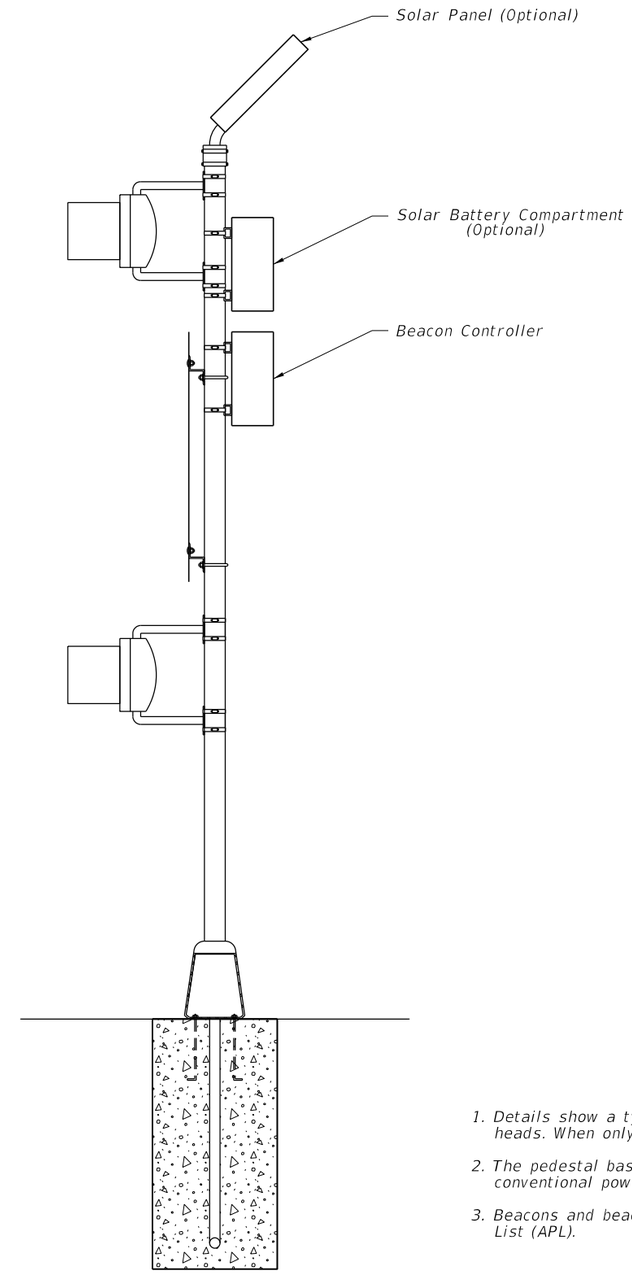

SIDE VIEW

NOTES

1. Details show a typical school zone sign with two flashing beacon heads. When only one beacon is required, install upper beacon.
2. The pedestal base shall be required for both solar powered and conventional powered applications.
3. Beacons and beacon controllers shall be on the Approved Products List (APL).

SCHOOL REGULATORY SIGN DETAILS

LAST REVISION	REVISION	DESCRIPTION:	FDOT FY 2016-17 DESIGN STANDARDS	ROADSIDE FLASHING BEACON ASSEMBLY	INDEX NO.	SHEET NO.
07/01/15					11862	5 of 7

12/3/2015 11:44:22 AM

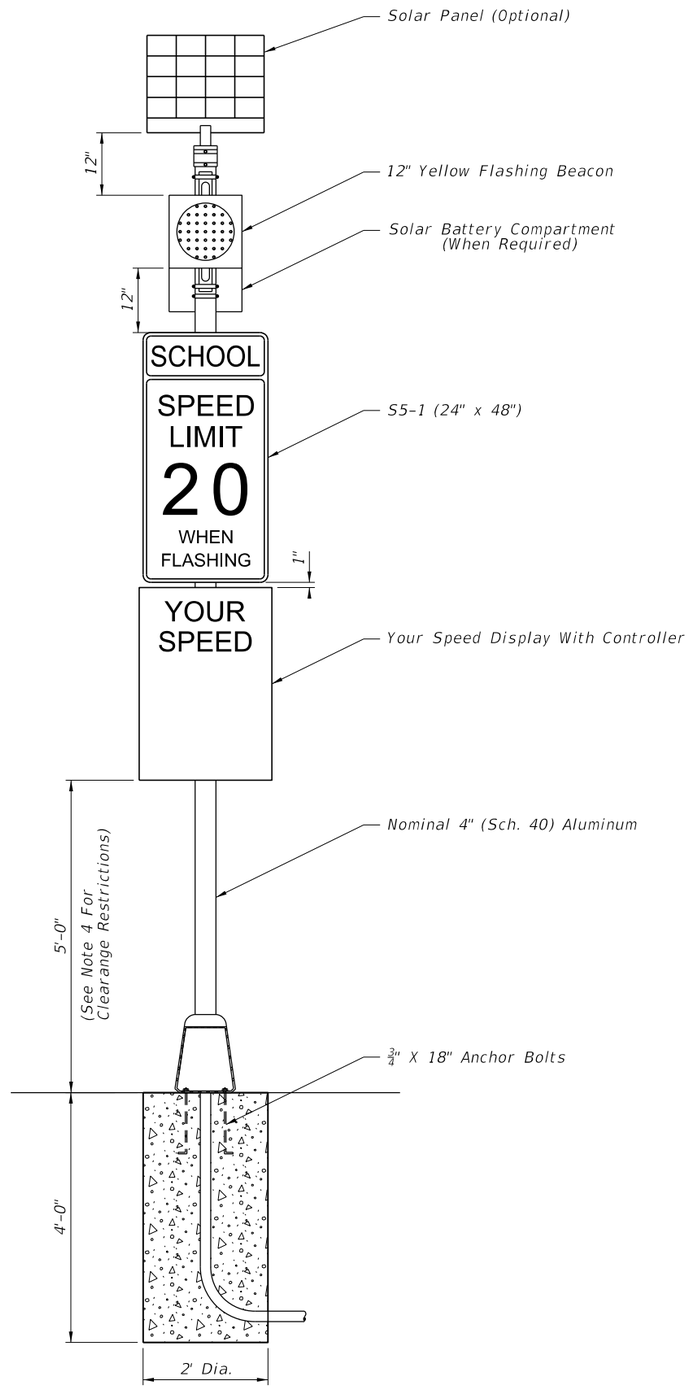

FRONT VIEW

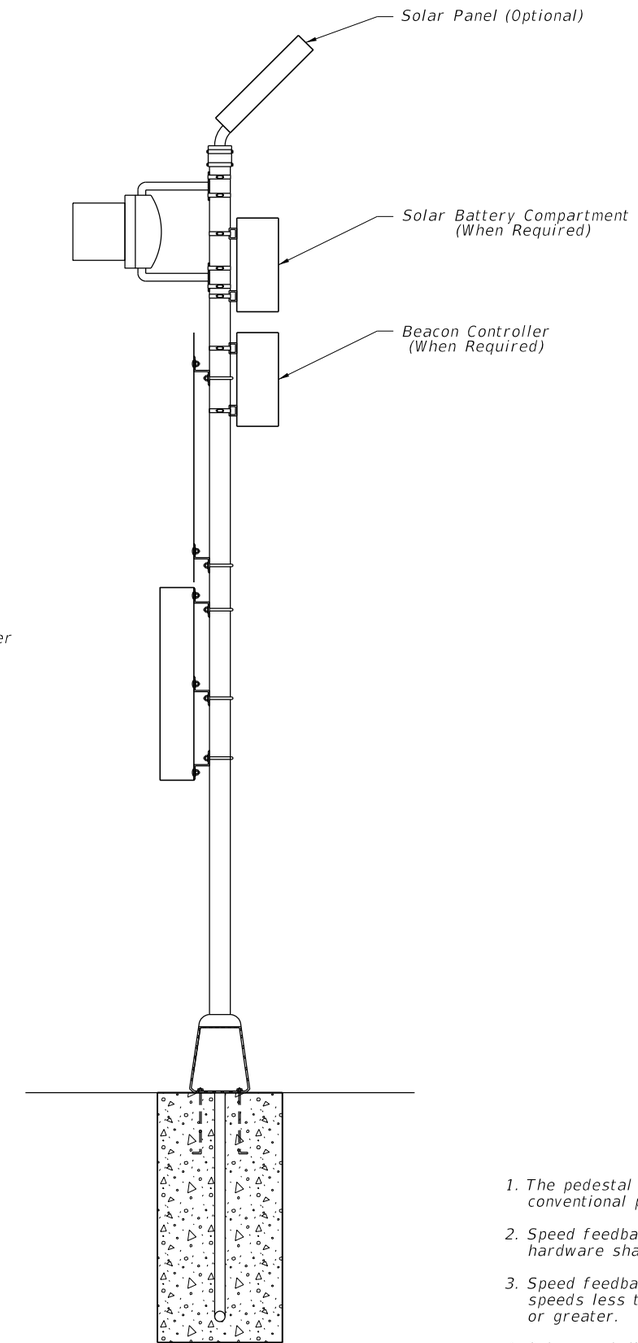

SIDE VIEW

NOTES

1. The pedestal base shall be required for both solar powered and conventional powered applications.
2. Speed feedback display, beacons, beacon controllers and installation hardware shall be on the Approved Products List (APL).
3. Speed feedback display shall indicate 15" numeral heights for posted speeds less than 45 mph and 18" heights for posted speeds 45 mph or greater.
4. Only speed display units weighing 62 lbs. or less may be mounted with a 5'-0" clearance. Speed display units weighing more than 62 lbs. shall be mounted with a 7'-0" clearance.

SCHOOL REGULATORY WITH SPEED FEEDBACK DETAILS

LAST REVISION	REVISION	DESCRIPTION:	FDOT FY 2016-17 DESIGN STANDARDS	ROADSIDE FLASHING BEACON ASSEMBLY	INDEX NO.	SHEET NO.
07/01/15					11862	6 of 7

12/3/2015 11:44:24 AM

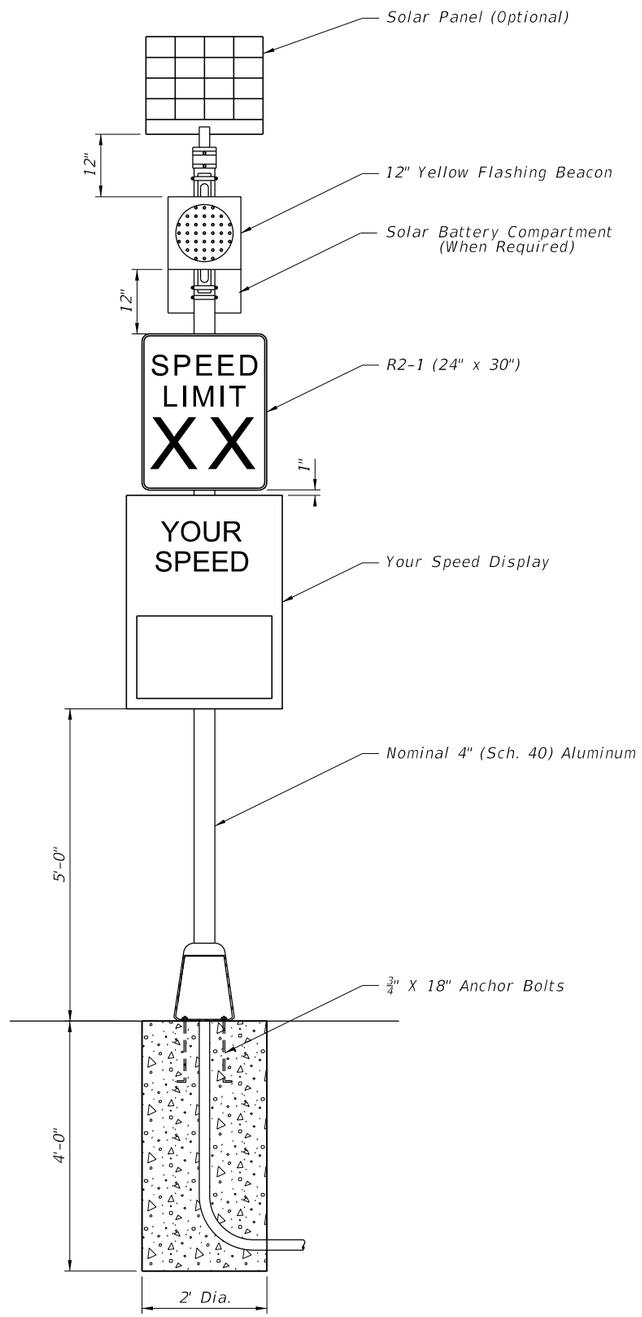

FRONT VIEW

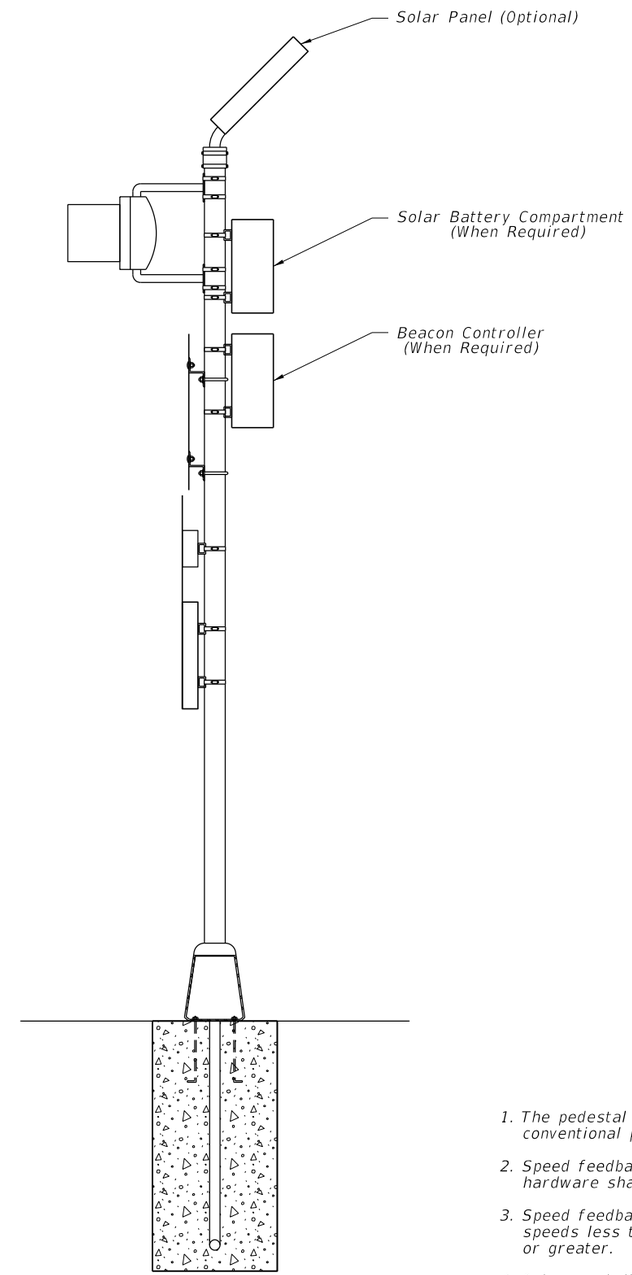

SIDE VIEW

NOTES

1. The pedestal base shall be required for both solar powered and conventional powered applications.
2. Speed feedback display, beacons, beacon controllers and installation hardware shall be on the Approved Products List (APL).
3. Speed feedback display shall indicate 15" numeral heights for posted speeds less than 45 mph and 18" heights for posted speeds 45 mph or greater.
4. Only speed display units weighing 62 lbs. or less may be mounted with a 5'-0" clearance. Speed display units weighing more than 62 lbs. shall be mounted with a 7'-0" clearance.

REGULATORY SIGN WITH SPEED FEEDBACK DETAILS

LAST REVISION	REVISION	DESCRIPTION:	FY 2016-17 DESIGN STANDARDS	ROADSIDE FLASHING BEACON ASSEMBLY	INDEX NO.	SHEET NO.
07/01/15					11862	7 of 7

12/3/2015 11:44:25 AM

NOTES:

1. Work with Index 11860.

2. Shop Drawings: Not required.

3. Materials:

   A. Steel Plate: ASTM A36 or ASTM A709 Grade 36
   B. Steel Pipe (Support Post): ASTM A501 Schedule 40
   C. Galvanized U-Bolts, Nuts and Plate Washer
      a. U-Bolts: ASTM A449
      b. Hex Nuts: ASTM A 536 Lock Nuts
      c. Plate Washer: ASTM A 36 or ASTM A709 Grade 36 or 50
   D. Galvanized Anchor bolts, Nuts and Washers:
      a. Anchor Rod: ASTM F1554 Grade 55 fully threaded (for Adhesive Anchors)
      b. Anchor Bolts: ASTM F1554 Grade 55 Grade A Hex
      c. Nuts: ASTM A563 Heavy Hex Locking
      d. Washers: ASTM F436
   E. Adhesive Anchor Bonding Material: Specification Section 931 Type HV Adhesive.
   F. Weld Material: E70XX
   G. Snap-In Post Cap: UV and weather-resistant glass-filled polyester cap

4. Coating:

   A. U-Bolts, Threaded Rods, Nuts and Washers: ASTM F2329
   B. Other Steel: ASTM A123

5. Fabrication:

   A. Weld: Specification Section 460-6.4
   B. Hot dip galvanize after fabrication

6. Construction:

   A. Locate Sign Support a minimum of 5 feet from an open joint or transition (sign stationing may be adjusted to accommodate this requirement.
   B. Base plate must be flush with back of Traffic Railing
   C. Anchors in Traffic Railings:
      a. Install Adhesive Anchors in accordance with Specification section 416 except perform field test on one anchor per sign support location.
      b. Use templates and tie anchors as necessary to maintain correct placement of C-I-P Embedded Anchors
      c. Do not drill into existing conduit
   D. Temporary Signs on Permanent Traffic Railings: Same as Permanent except Field testing of anchors is not required
   E. Temporary Signs on Temporary Railings/Barriers:
      a. Install Sign Supports at the midpoint along the length of a single segment
      b. Avoid drilling through existing reinforcement; use of metal detector not required
      c. Field testing of anchors is not required

7. Removal of Temporary Signs on Permanent Traffic Railings:

   A. Cut anchor rods flush with the top of the railing
   B. Coat anchors with Type F-1 epoxy to prevent corrosion
      a. Extend coating 2 inches beyond edge of cut anchor rods
      b. Epoxy coating 1/16" thick minimum

8. Payment:

   Include the cost of all materials and labor in the cost of the single post sign assembly.

SIGN LIMITATIONS TABLE

MAX. WIND SPEED (MPH)	MAX. SIGN AREA (SF)	MAX. SIGN CENTROID HEIGHT (DIM. A + DIM. C)
110	30	9'-10"
130	25	9'-7"
150	20	9'-7"

Dimension A = Distance from centerline of the Support Post to the bottom of the sign or sign cluster.

Dimension C = Vertical distance from the bottom of the sign or sign cluster to the Centroid of the sign or sign cluster.

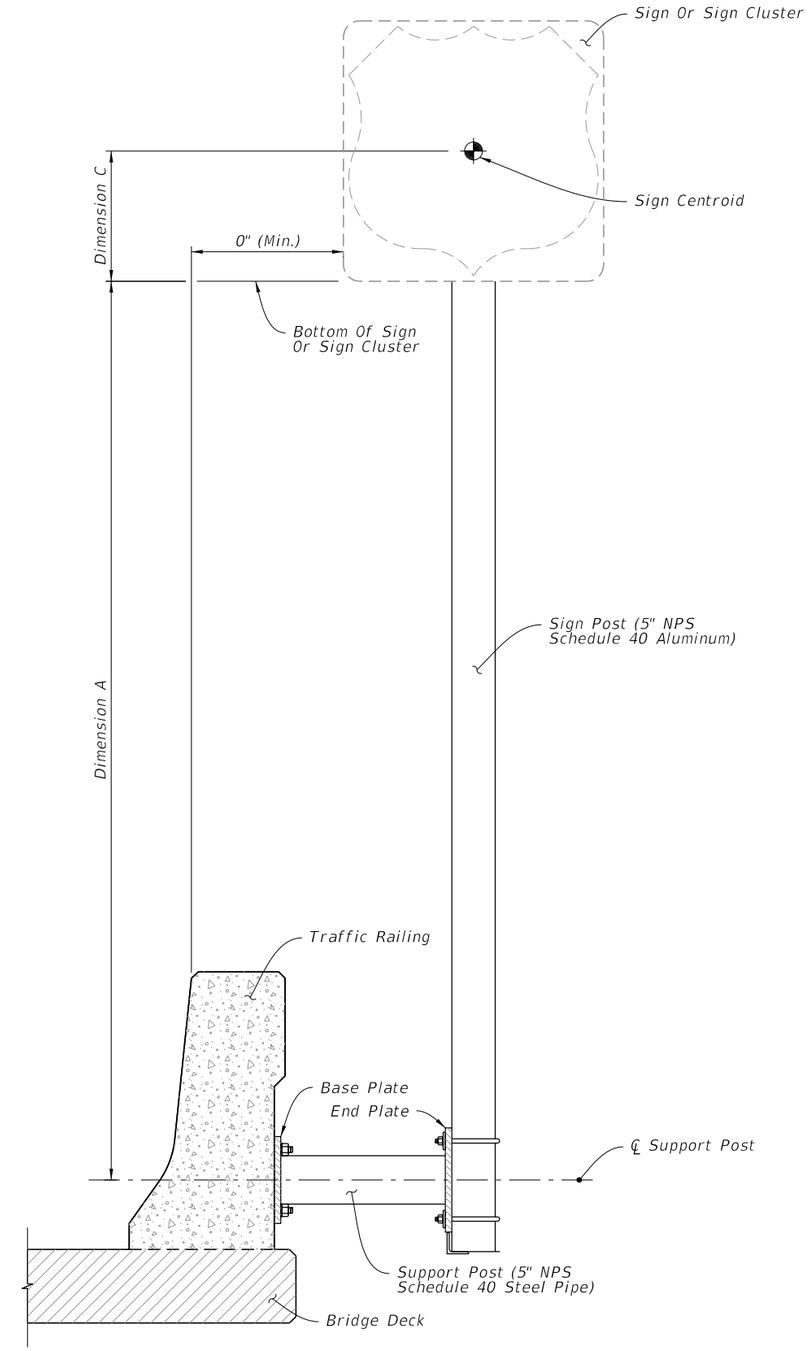

SIGN SUPPORT ASSEMBLY

12/3/2015 11:44:25 AM

LAST REVISION	REVISION	DESCRIPTION:			INDEX NO.	SHEET NO.
01/01/16			FDOT FY 2016-17 DESIGN STANDARDS	SINGLE POST BRIDGE MOUNTED SIGN SUPPORT	11870	1 of 3

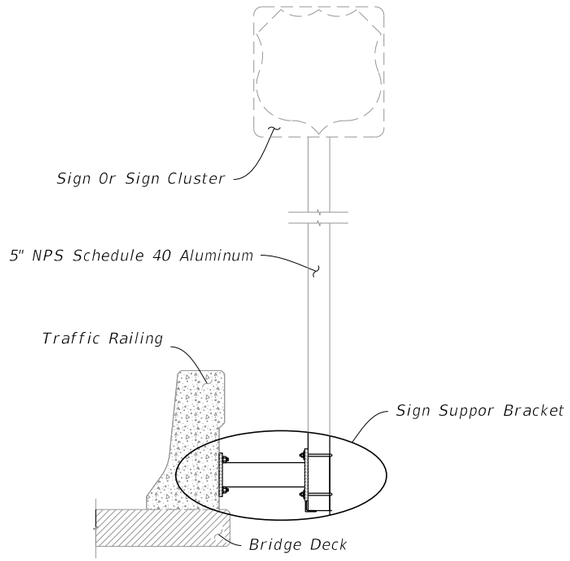

SIGN SUPPORT ASSEMBLY

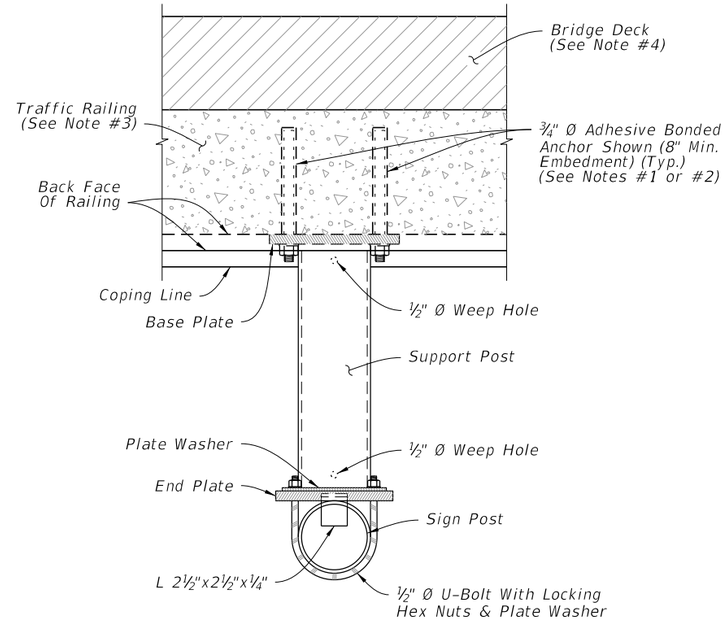

PLAN

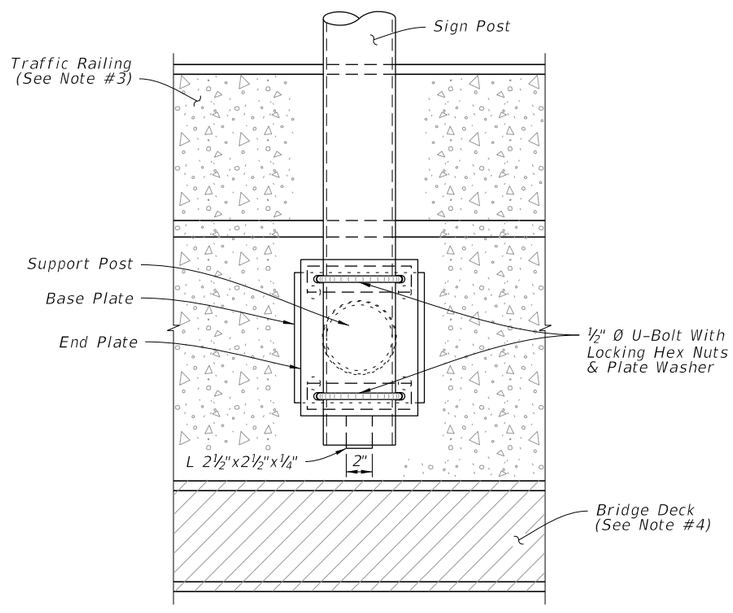

ELEVATION

SIGN SUPPORT BRACKET

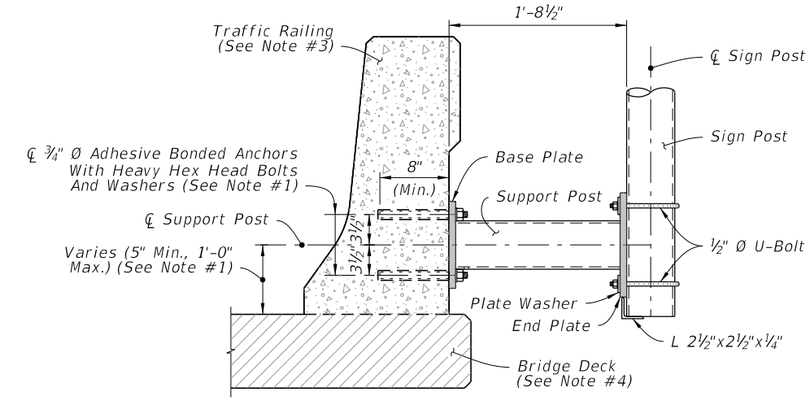

ADHESIVE BOND

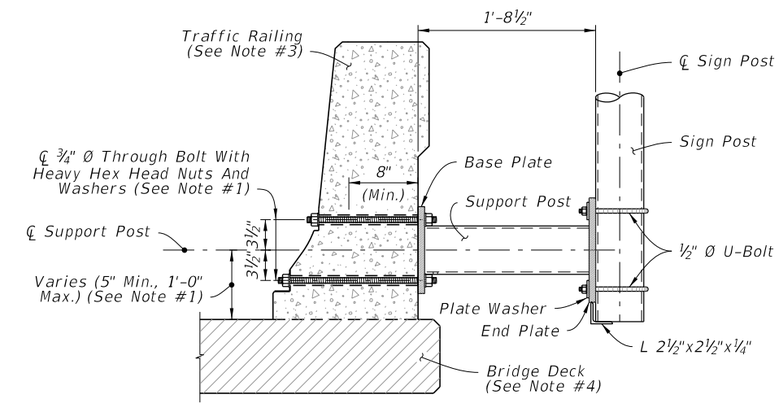

THROUGH BOLTING

TYPICAL SECTION - EXISTING RAILING

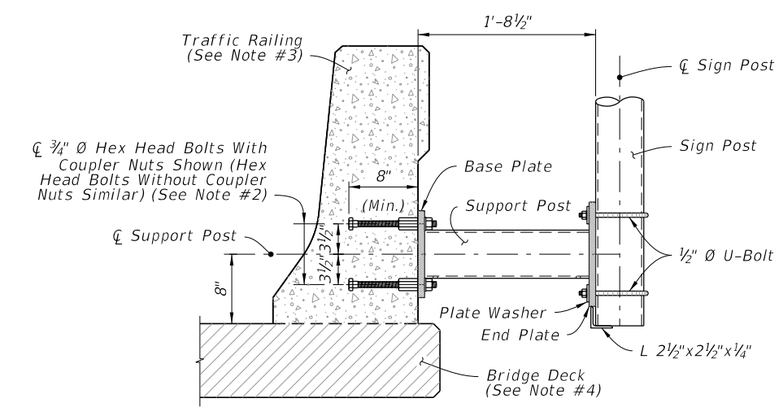

TYPICAL SECTION - NEW CONSTRUCTION

NOTES:

1. Existing Traffic Railings:

   A. Locate existing conduit prior to drilling and adjust placement of base plate as necessary to avoid damaging existing conduit. Base plate must be flush with back of traffic railing. Maintain a minimum cover 2" from face of traffic railing to tip of Adhesive Anchor.

   B. For concrete parapets less than 10" thick, through bolt ¾" Ø Heavy Hex Head Bolts with Nuts and Washers in lieu of Adhesive Bonded Anchors. Bolt heads shall not protrude more than 1½" beyond traffic face of railing.

   C. For through bolting, cut front face of the traffic railing so that washer is flush with the concrete.

2. New Traffic Railings:

   A. Optional Couplers are shown for slipforming; keep Anchor Bolt coupler threads free of concrete.

3. 32" F-Shape Traffice Railing shown, other Traffic Ralings and Parapets are similar.

4. Bridge Deck shown, Approach Slab and Retaining Wall are similar.

12/3/2015 11:44:26 AM

LAST REVISION	REVISION	DESCRIPTION:			INDEX NO.	SHEET NO.
01/01/16			FDOT FY 2016-17 DESIGN STANDARDS	SINGLE POST BRIDGE MOUNTED SIGN SUPPORT	11870	2 of 3

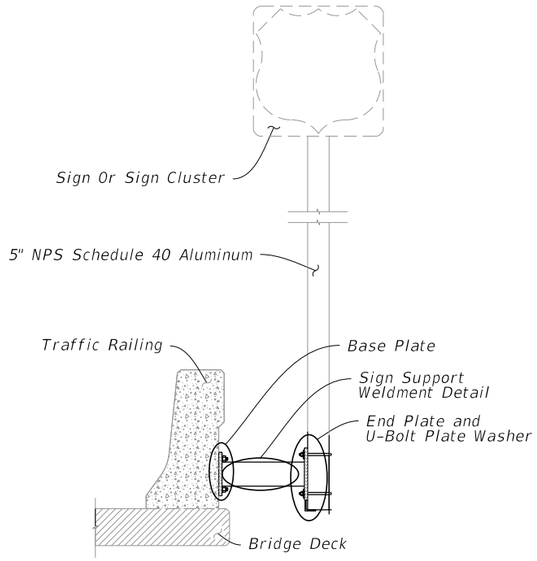

SIGN SUPPORT ASSEMBLY

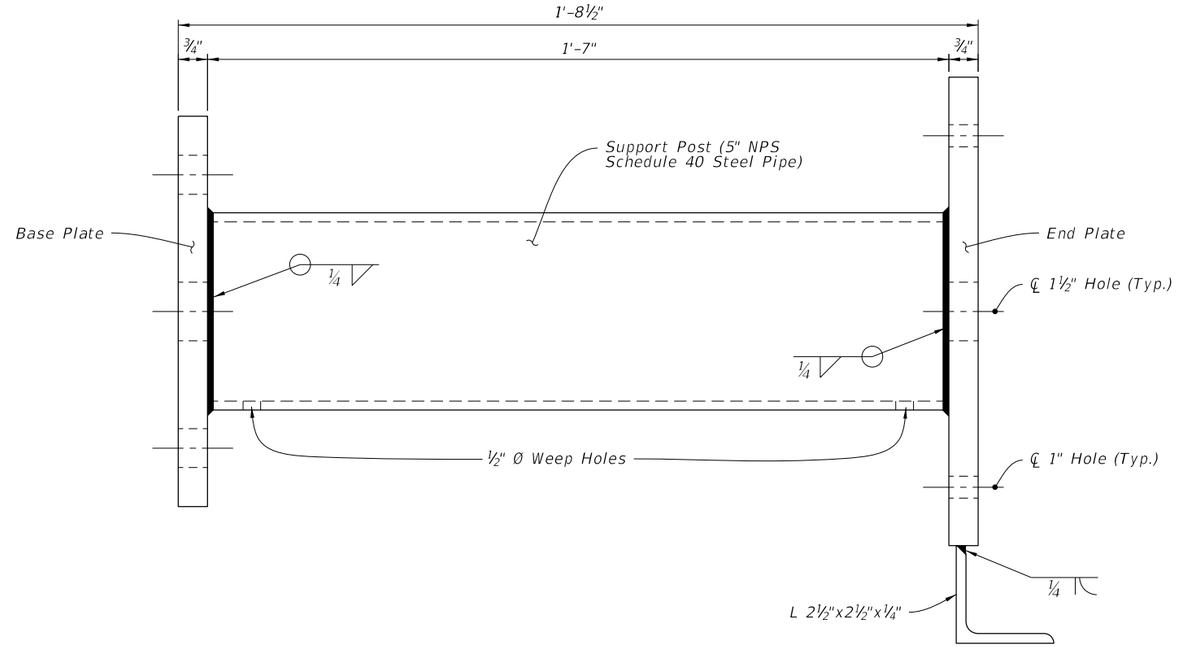

SIGN SUPPORT WELDMENT DETAIL

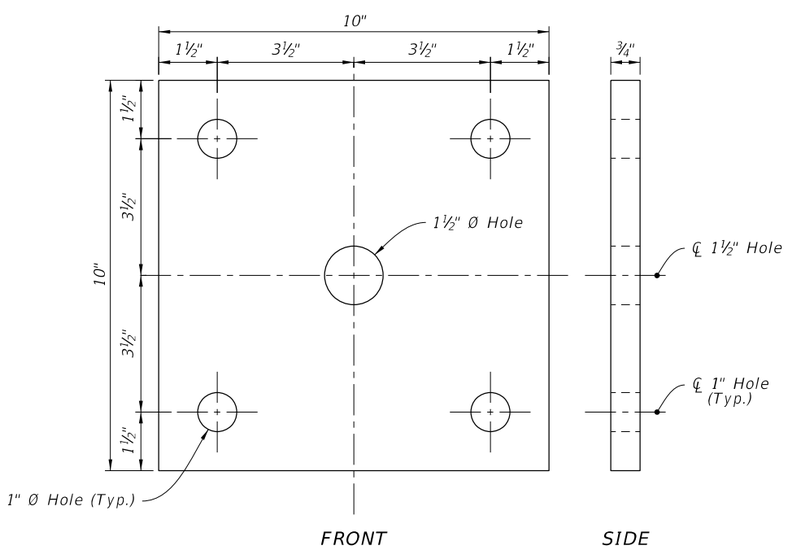

BASE PLATE

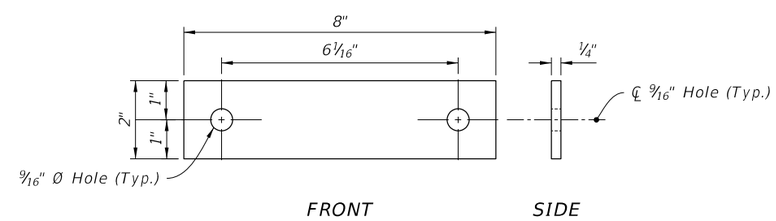

U-BOLT PLATE WASHER

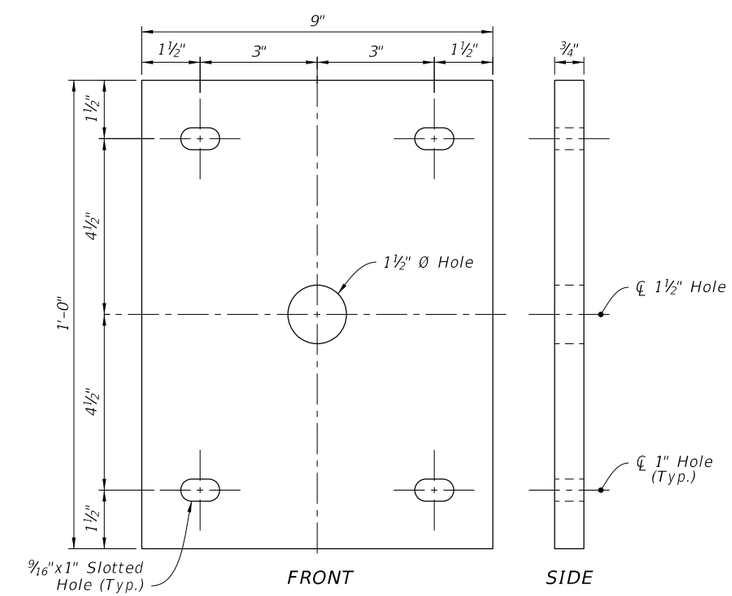

END PLATE

12/3/2015 11:44:27 AM

LAST REVISION	REVISION	DESCRIPTION:			INDEX NO.	SHEET NO.
01/01/16			FY 2016-17 DESIGN STANDARDS	SINGLE POST BRIDGE MOUNTED SIGN SUPPORT	11870	3 of 3

NOTES:

1. Work with Index 11860.

2. Shop Drawings: Not required.

3. Materials:

   A. Steel Plate: ASTM A36 or ASTM A709 Grade 36
   B. Steel Pipe (Support Post): ASTM A501 Schedule 40
   C. Galvanized U-Bolts, Nuts and Plate Washer
      a. U-Bolts: ASTM A449
      b. Hex Nuts: ASTM A 536 Lock Nuts
      c. Plate Washer: ASTM A 36 or ASTM A709 Grade 36 or 50
   D. Galvanized Anchor Bolts, Nuts and Washers:
      a. Anchor Rod: ASTM F1554 Grade 55 fully threaded (for Adhesive Anchors)
      b. Anchor Bolts: ASTM F1554 Grade 55 Grade A Hex
      c. Nuts: ASTM A563 Heavy Hex Locking
      d. Washers: ASTM F436
   E. Adhesive Anchor Bonding Material: Specification Section 931 Type HV Adhesive
   F. Weld Material: E70XX
   G. Snap-In Post Cap: UV and weather-resistant glass-filled polyester cap

4. Coating:

   A. U-Bolts, Threaded Rods, Nuts and Washers: ASTM F2329
   B. Other Steel: ASTM A123

5. Fabrication:

   A. Weld: Specification Section 460-6.4
   B. Hot dip galvanize after fabrication

6. Construction:

   A. Locate Sign Support a minimum of 5 feet from an open joint or transition (sign stationing may be adjusted to accommodate this requirement
   B. Base plate must be flush with top of Railing
   C. Anchors in Traffic Railings:
      a. Install Adhesive Anchors in accordance with Specification section 416 except perform field test on one anchor per sign support location
      b. Use template and tie anchors as necessary to maintain correct placement of C-I-P Embedded Anchors
      c. Do not drill into existing reinforcing
   D. Temporary Signs on Permanent Traffic Railings, Same as Permanent except field testing of anchors is not required
   E. Temporary Signs on Temporary Railings/Barriers:
      a. Install Sign Supports at the midpoint along the length of a single segment
      b. Avoid drilling through existing reinforcement; use of metal detector not required.
      c. Field testing of anchors is not required

7. Removal of Temporary Signs on Permanent Traffic Railings:

   A. Cut anchor rods flush with the top of the railing
   B. Coat anchors with Type F-1 epoxy to prevent corrosion
      a. Extend coating 2 inches beyond edge of cut anchor rods
      b. Epoxy coating 1/16"thick minimum

8. Payment:

   Include the cost of all materials and labor in the cost of the single post sign assembly.

TABLE 1 - SIGN PANEL AND POST SIZING		
Wind Speed (MPH)	Max. Sign Area (SF)	Post Ø (NPS)
70 - All Temporary Signs	≤ 24	3.0"
110 & 130	< 13.5	3.0"
	13.5 < Sign < 20	3.5"
150	< 13.5	3.5"
	13.5 < Sign < 20	4.0"

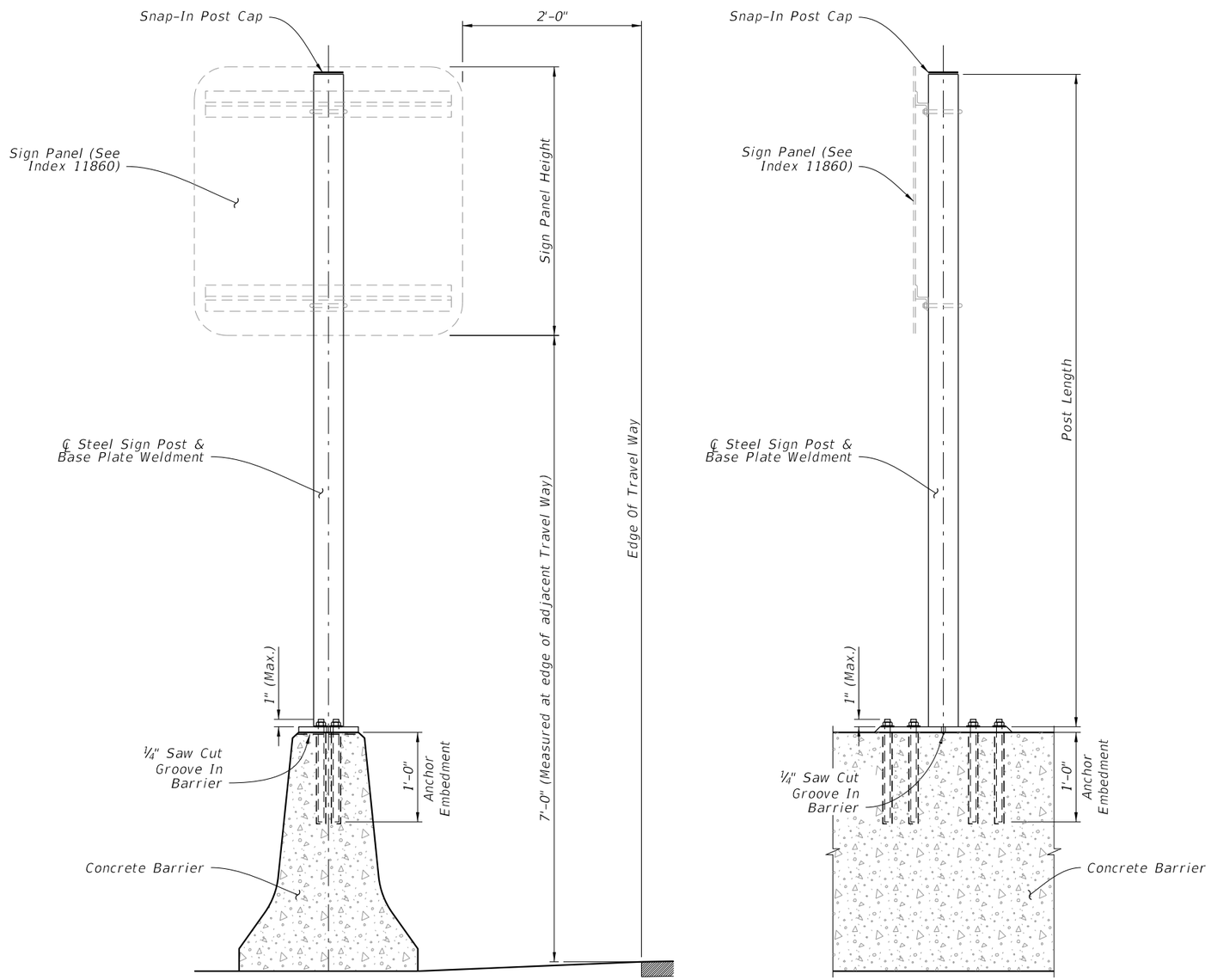

PARALLEL TO DIRECTION OF TRAFFIC

PERPENDICULAR TO DIRECTION OF TRAFFIC

(Index 410 Standard "Full Wall" Median Barrier shown; others similar)

ELEVATION

12/3/2015 11:44:28 AM

LAST REVISION	REVISION	DESCRIPTION:			INDEX NO.	SHEET NO.
01/01/16			FY 2016-17 DESIGN STANDARDS	SINGLE POST MEDIAN BARRIER MOUNTED SIGN SUPPORT	11871	1 of 2

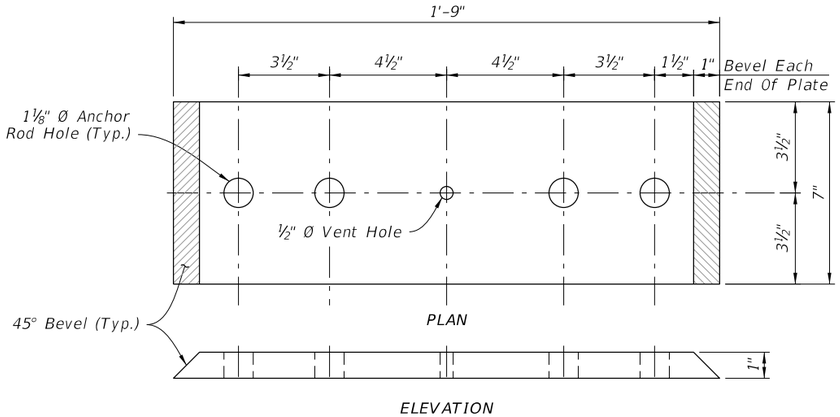

BASE PLATE TYPE A
(Linear Anchor Rod Pattern)

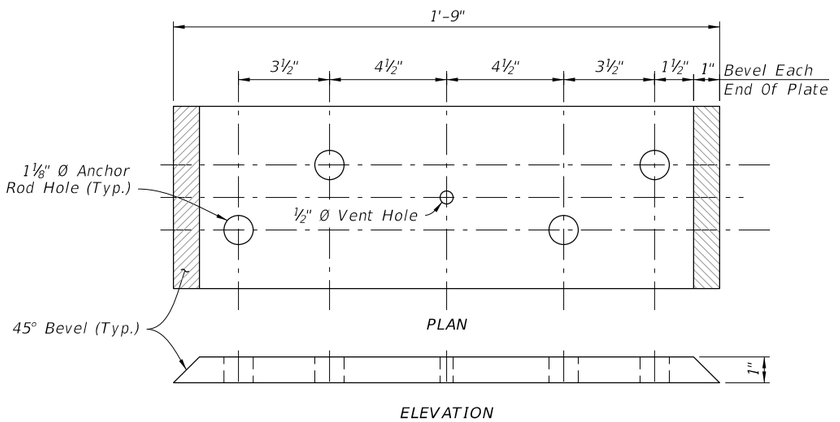

BASE PLATE TYPE B
(Staggered Anchor Rod Pattern)

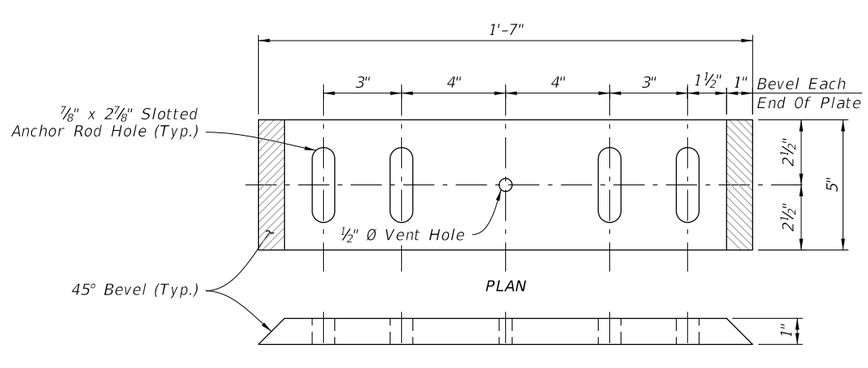

BASE PLATE TYPE C

NOTES:

1. Place anchor rods in a staggered or linear pattern as necessary to avoid reinforcing.
2. Use a staggered pattern for all temporary barriers.

TABLE 2 - BASE PLATE TYPE AND ANCHOR ROD SIZING			
Index No.	Type/Application	Base Plate Type	Anchor Rod Ø
410	Full Wall	B	1"
410	Cantilever or L-Wall	A	
420 & 425	When Clear Space between Dual Bridge Traffic Railing is ≤ 4'-0"	A	
421	All Applications	A	
All listed above Plus 414 & 415	Temporary Signs	C	¾"

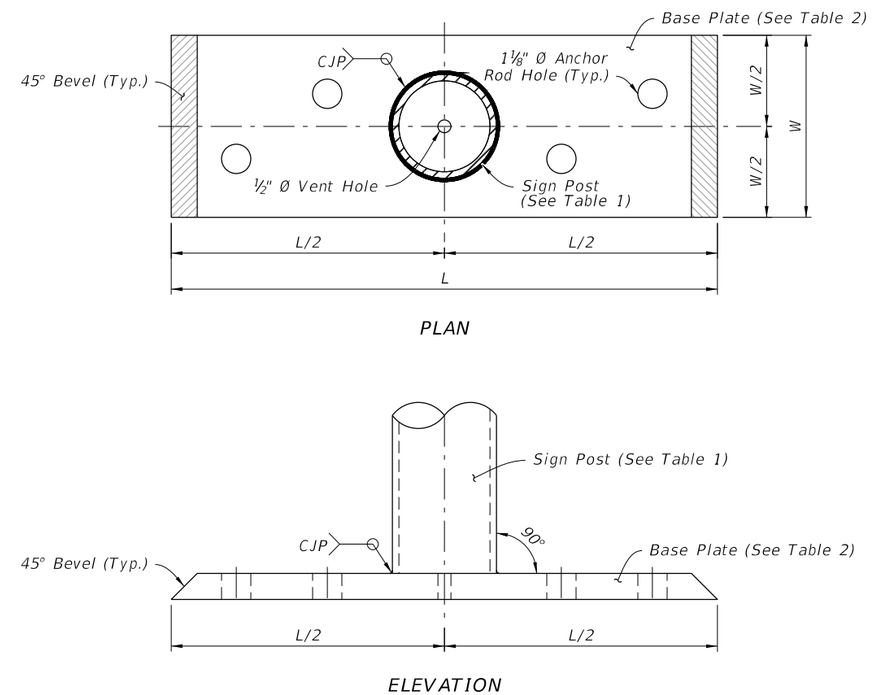

SIGN SUPPORT WELDMENT DETAIL
(Staggered Anchor Rod Pattern shown)

12/3/2015 11:44:29 AM

LAST REVISION	REVISION	DESCRIPTION:			INDEX NO.	SHEET NO.
01/01/16			FY 2016-17 DESIGN STANDARDS	SINGLE POST MEDIAN BARRIER MOUNTED SIGN SUPPORT	11871	2 of 2

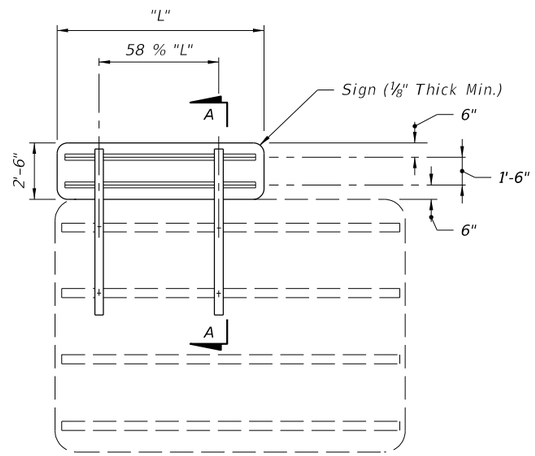

NOTE: Exit numbering panel shall be located to the right side for right exit and to the left for left exit.

Mounting of Exit Numbering Panels To Highway Signs

ELEVATION

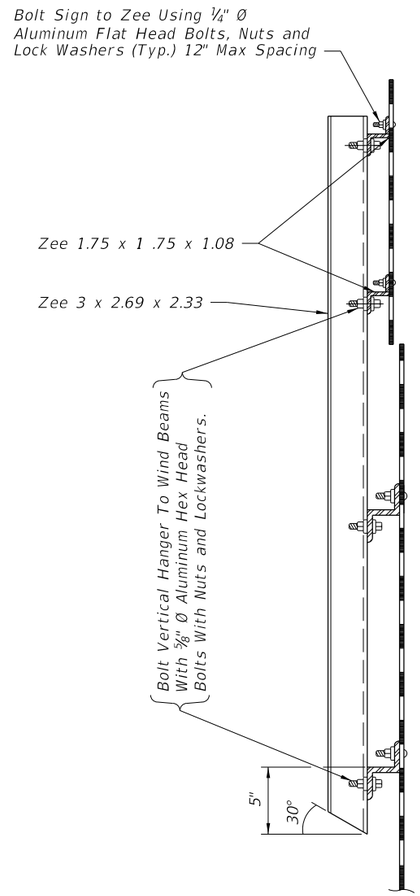

SECTION AA

GENERAL NOTES

MATERIALS:
All aluminum materials shall meet the requirements of the Aluminum Association Alloy 6061-T6 and also the following ASTM specifications for the following: Sheets and plates B209; extruded shapes B221 and standard structural shapes B308.

ALUMINUM BOLTS, NUTS & LOCK WASHERS:
Aluminum bolts shall meet the requirements of the Aluminum Association Alloy 2024-T4 (ASTM F468). The bolts shall have an anodic coating of at least .0002" thick and be chromate sealed. Lockwashers shall meet the requirement of Aluminum Association Alloy 7075-T6 (ASTM B221). Nuts shall meet the requirement of Aluminum Association Alloy 6262-T9 (ASTM F467) or 6061-T6.

SIGN FACE:
All sign face corners shall be rounded. See sign layout sheet for dimension "L" and sign face details. For mounting details refer to Index No. 11300.

12/3/2015 11:44:31 AM

LAST REVISION	REVISION	DESCRIPTION:			INDEX NO.	SHEET NO.
10/09/14			FY 2016-17 DESIGN STANDARDS	MOUNTING EXIT NUMBER PANELS TO HIGHWAY SIGNS	13417	1 of 1

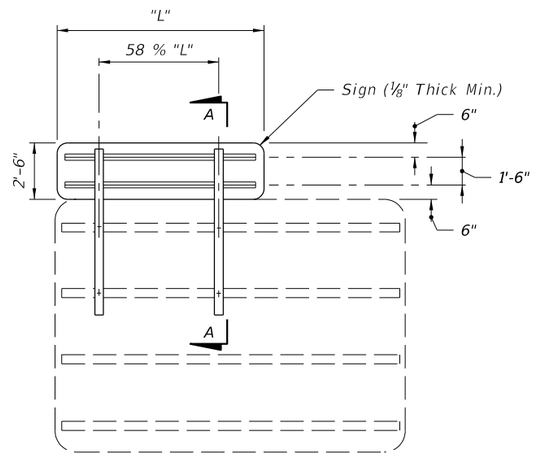

NOTE: Exit numbering panel shall be located to the right side for right exit and to the left for left exit.

Mounting of Exit Numbering Panels To Highway Signs

ELEVATION

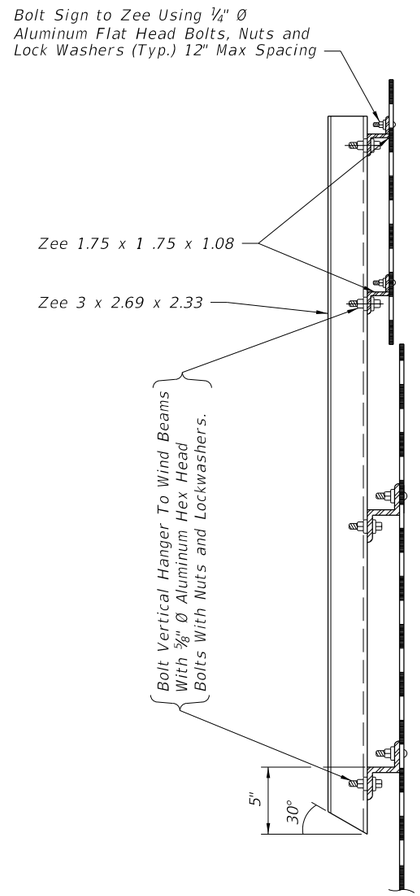

SECTION AA

GENERAL NOTES

MATERIALS:
All aluminum materials shall meet the requirements of the Aluminum Association Alloy 6061-T6 and also the following ASTM specifications for the following: Sheets and plates B209; extruded shapes B221 and standard structural shapes B308.

ALUMINUM BOLTS, NUTS & LOCK WASHERS:
Aluminum bolts shall meet the requirements of the Aluminum Association Alloy 2024-T4 (ASTM F468). The bolts shall have an anodic coating of at least .0002" thick and be chromate sealed. Lockwashers shall meet the requirement of Aluminum Association Alloy 7075-T6 (ASTM B221). Nuts shall meet the requirement of Aluminum Association Alloy 6262-T9 (ASTM F467) or 6061-T6.

SIGN FACE:
All sign face corners shall be rounded. See sign layout sheet for dimension "L" and sign face details. For mounting details refer to Index No. 11300.

12/3/2015 11:44:31 AM

LAST REVISION	REVISION	DESCRIPTION:			INDEX NO.	SHEET NO.
10/09/14			FY 2016-17 DESIGN STANDARDS	MOUNTING EXIT NUMBER PANELS TO HIGHWAY SIGNS	13417	1 of 1

CASE I

For Use On Freeway And Expressway Systems For Signs On Mainline.

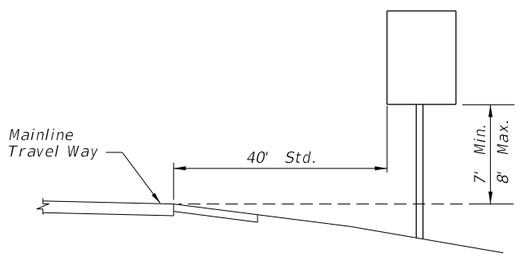

For Median Installation:
If Median Width Does Not Allow Std. Offset From Both Roadways, Center Sign In Median.

CASE II

For Use In All Rural Roads And On Freeway And Expressway Ramps.

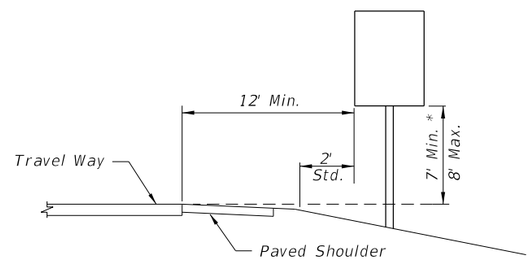

14' Horizontal Clearance Standard On All Freeway And Expressway Ramps.

* 4' For Wrong Way Signs On Interstate Exit Ramps

CASE III

For Use On All Roads With Signs Mounted Behind Sidewalk.

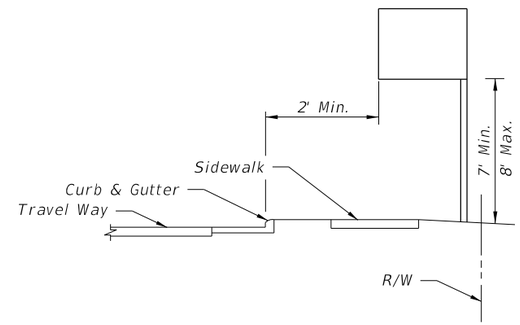

GENERAL NOTES:

1. The typical sections shown hereon serve as a guide for locating the traffic signs required under various roadside conditions. For size and details of sign construction and footing, refer to the appropriate standard index drawing for roadside sign.

2. It shall be the CONTRACTORS responsibility to verify the length of sign supports in the field prior to fabrication.

3. Ground signs shall be installed at an angle of 1 to 4 degrees away from the traffic flow (see illustration). Shoulder mounted signs shall be rotated counterclockwise and median mounted signs rotated clockwise. Signs on curves shall be mounted as noted above from the perpendicular to the motorist line of sight.

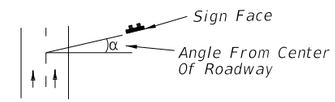

CASE IV (MERGE SIGN)

For Use On All Rural, Freeway And Expressway Systems.

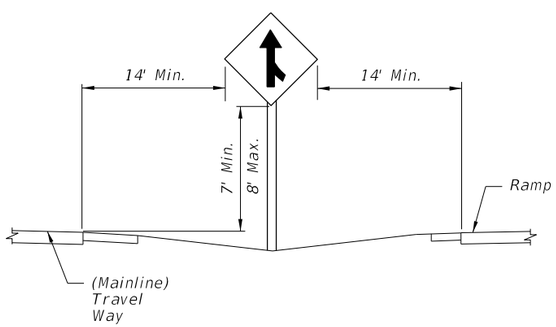

CASE V

For Use In Business Or Residential Areas Only.

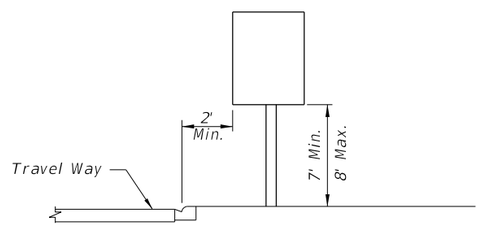

CASE VI

For Use On All Roadways With Signs Behind Guardrail.

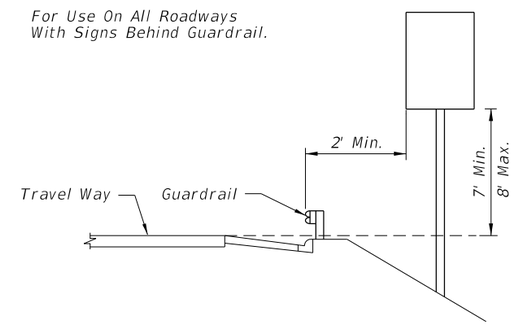

4. The setback for stop and yield signs may be reduced to 3' minimum from the driving lane if required for visibility in business or residential sections with no curb and speeds of 30 MPH or less.

5. The mounting heights are measured from the bottom of the sign panel to a horizontal line extended from the edge of the driving lane. If the standard heights cannot be met, the minimum heights are as follows:

Expressway & Freeway Systems	7'
Other Roadway Systems	
Rural	5'
Urban (including residential with parking and /or pedestrian activity)	7'

If a secondary sign is mounted below the major sign, the major sign shall be at least 8' and the secondary sign at least 5' for expressway & freeway systems and for other systems the height to the secondary sign shall be at least 5' for rural and 7' for urban sections.

6. Sign supports should never be placed in the bottom of ditches where erosion might affect the proper operation of the breakaway feature.

7. Sign supports shall not reduce the accessible route /continuous passage to less than 4' min. clear width as required by the Americans with Disabilities Act (ADA) Accessibility Guidelines.

CASE VII (REST AREA & EXIT GORE SIGNS)

For Use On All Freeway And Expressway Systems

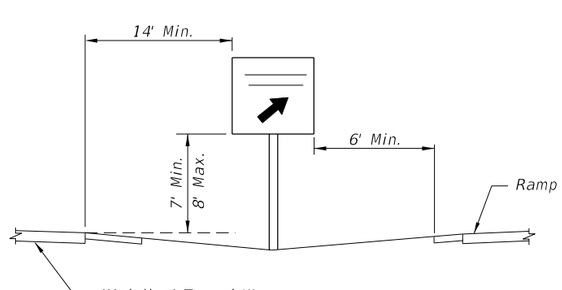

CASE VIII

Sign On Island or Curbed Median

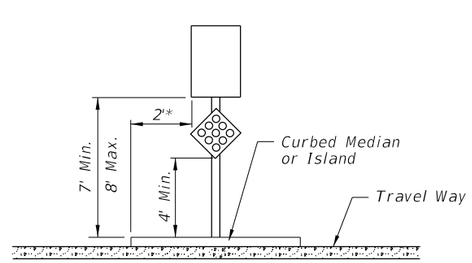

* For Separators < 6', Center The Sign Within The Separator.

Center Sign Column On Island

CASE IX (MILE POST MARKER)

For More Information Refer To Section 2H Of The Manual On Uniform Traffic Control Devices

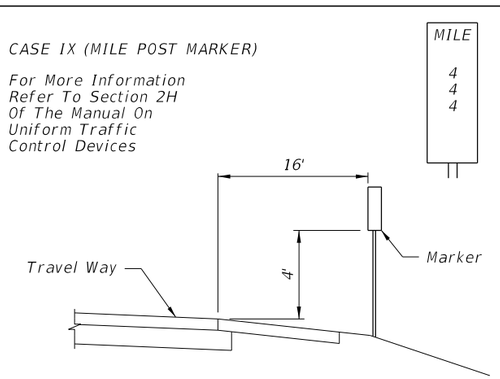

12/3/2015 11:44:32 AM

LAST REVISION	REVISION	DESCRIPTION:			INDEX NO.	SHEET NO.
07/01/15			FDOT FY 2016-17 DESIGN STANDARDS	TYPICAL SECTIONS FOR PLACEMENT OF SINGLE & MULTI-COLUMN SIGNS	17302	1 of 1

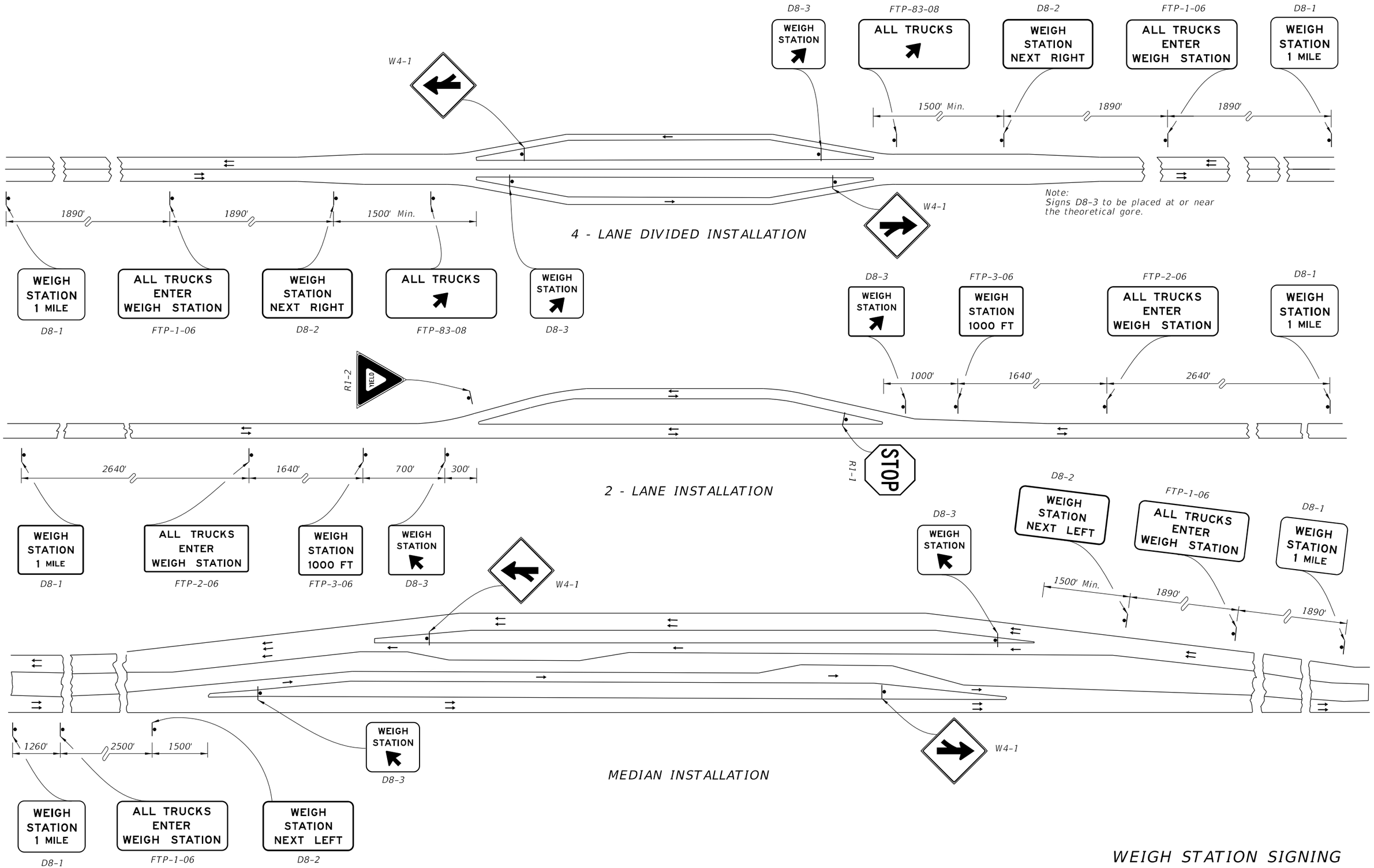

WEIGH STATION SIGNING

12/3/2015 11:44:35 AM

LAST REVISION	REVISION	DESCRIPTION:			INDEX NO.	SHEET NO.
07/01/09			FDOT FY 2016-17 DESIGN STANDARDS	TYPICAL SIGNING FOR TRUCK WEIGH & INSPECTION STATIONS	17328	1 of 2

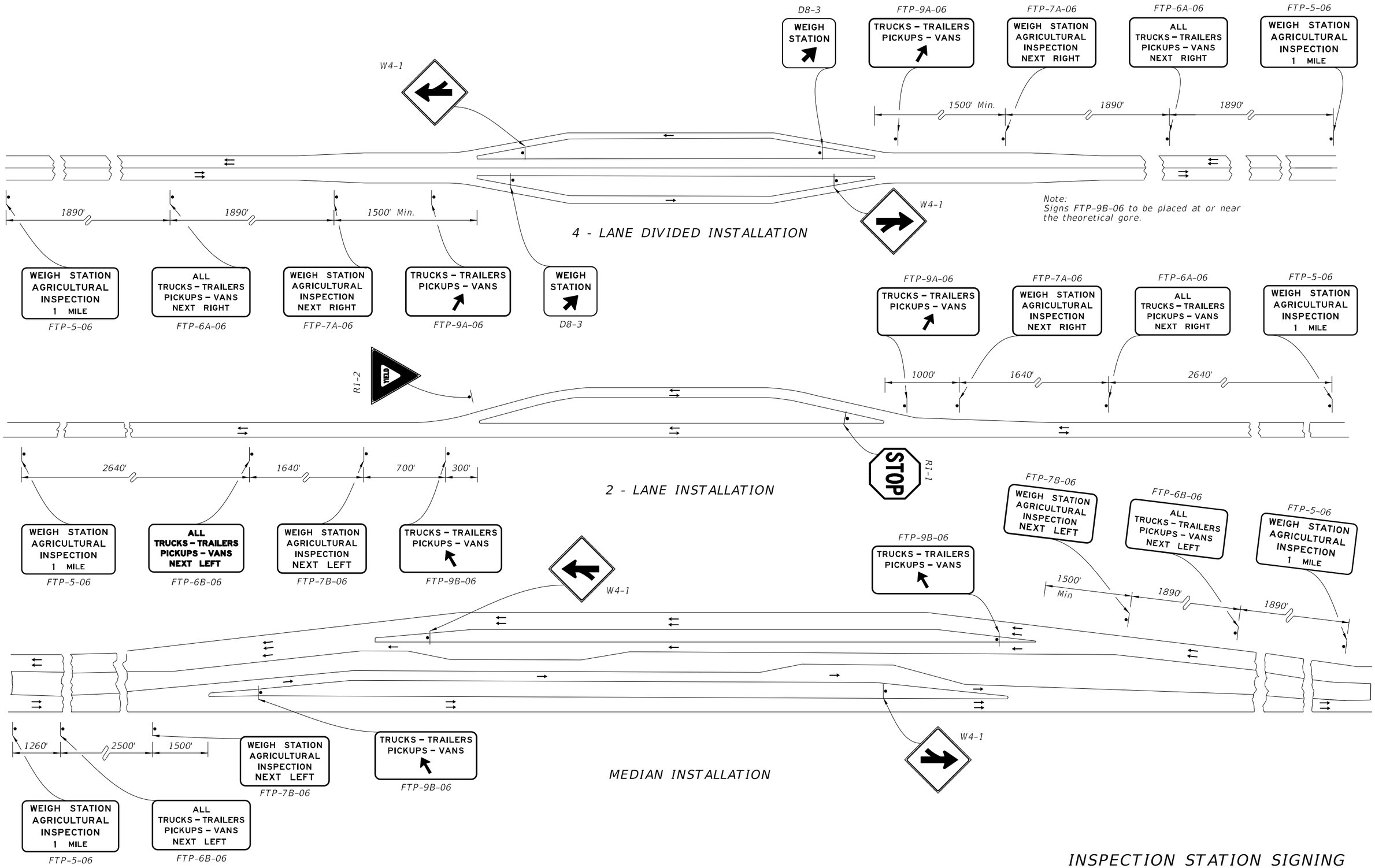

INSPECTION STATION SIGNING

12/3/2015 11:44:35 AM

LAST REVISION	REVISION	DESCRIPTION:			INDEX NO.	SHEET NO.
07/01/09			FDOT FY 2016-17 DESIGN STANDARDS	TYPICAL SIGNING FOR TRUCK WEIGH & INSPECTION STATIONS	17328	2 of 2

Approach Speed (MPH)	Distance A (FT.)
25 or Less	200
26 To 35	250
36 To 45	300
46 To 55	325

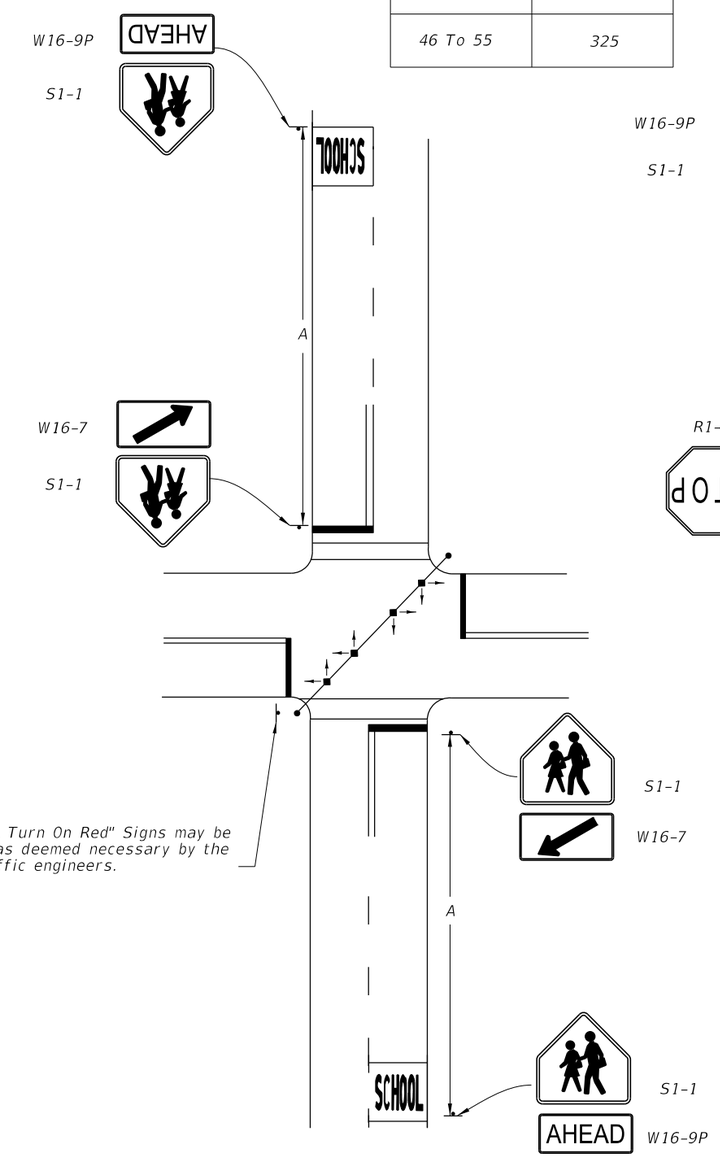

1. TRAFFIC CONTROL DEVICES FOR A SCHOOL CROSSWALK AT A SIGNALIZED INTERSECTION

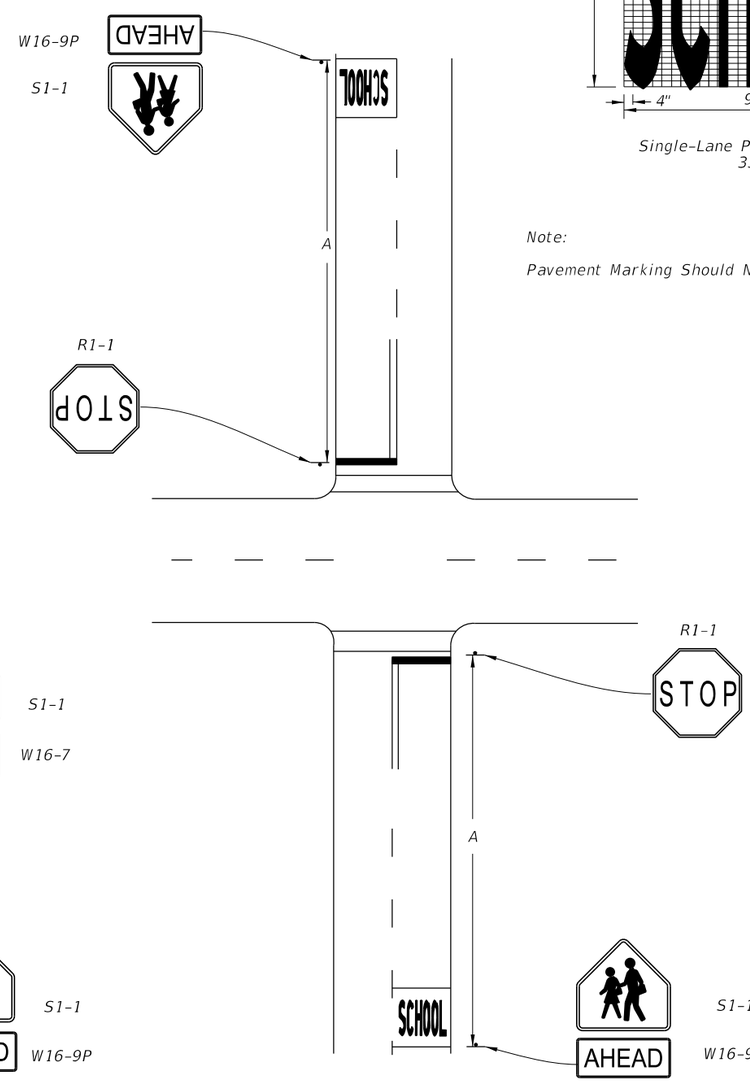

2. TRAFFIC CONTROL DEVICES FOR A SCHOOL CROSSWALK AT A STOP CONTROLLED INTERSECTION

Note:
Special speed restrictions are not normally applicable to these two cases.

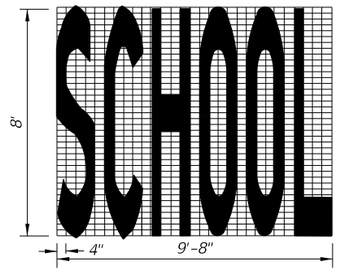

Single-Lane Pavement Marking
33 s.f.

Note:

Pavement Marking Should Not Extend Into Opposing Lane.

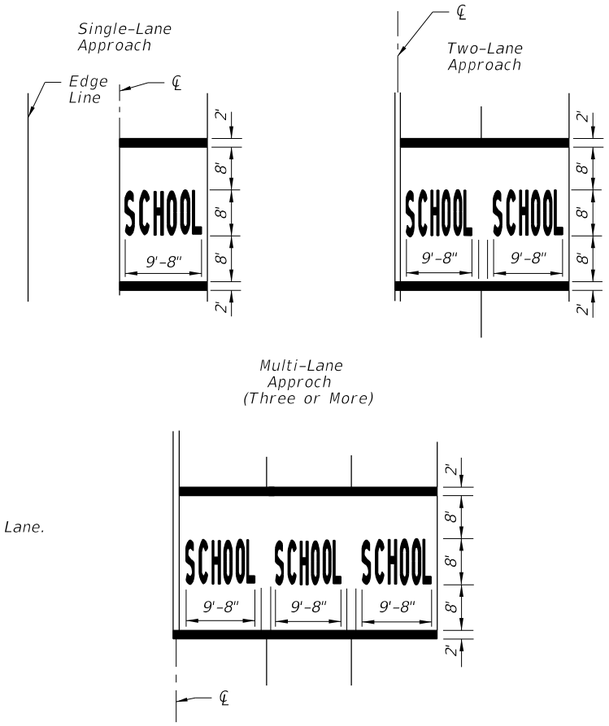

PAVEMENT MARKINGS

Notes:

Signs shall be erected in accordance with index No. 17302.

When computing pavement messages quantities do not include transverse lines.

School crosswalk widths at intersections shall be 6' minimum 10' standard without public sidewalk curb ramps 10' minimum with public sidewalk curb ramps. The width is measured from inside of line to inside of line,

For additional marking information, see Index 17346, Sheet 2.

12/3/2015 11:44:36 AM

LAST REVISION	REVISION	DESCRIPTION:			INDEX NO.	SHEET NO.
01/01/12			FDOT FY 2016-17 DESIGN STANDARDS	SCHOOL SIGNS & MARKINGS	17344	1 of 6

3. TRAFFIC CONTROL DEVICES FOR REDUCED SPEED ZONE AT A SCHOOL CROSSWALK 2 LANES-2 WAY TRAFFIC (40 MPH OR LESS) (MIDBLOCK OR ON THRU STREET AT AN INTERSECTION)

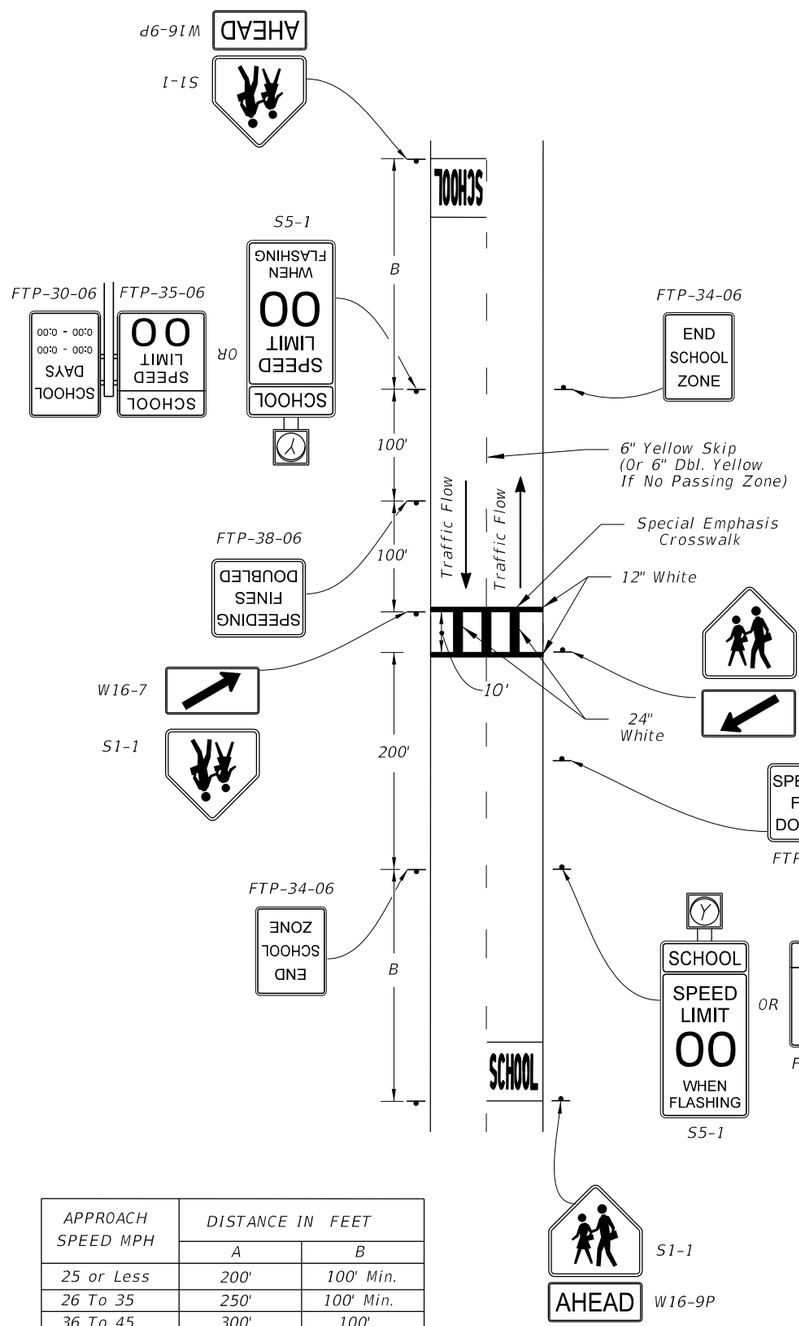

APPROACH SPEED MPH	DISTANCE IN FEET	
	A	B
25 or Less	200'	100' Min.
26 To 35	250'	100' Min.
36 To 45	300'	100'
46 To 55	325'	125'

SCHOOL CROSSWALK
Midblock crosswalks shall be a minimum of 10'.
See Index No. 17346.

4. TRAFFIC CONTROL DEVICES FOR REDUCED SPEED ZONE AT A SCHOOL CROSSWALK 2 LANES-2 WAY TRAFFIC (45 MPH OR GREATER) (MIDBLOCK OR ON THRU STREET AT AN INTERSECTION)

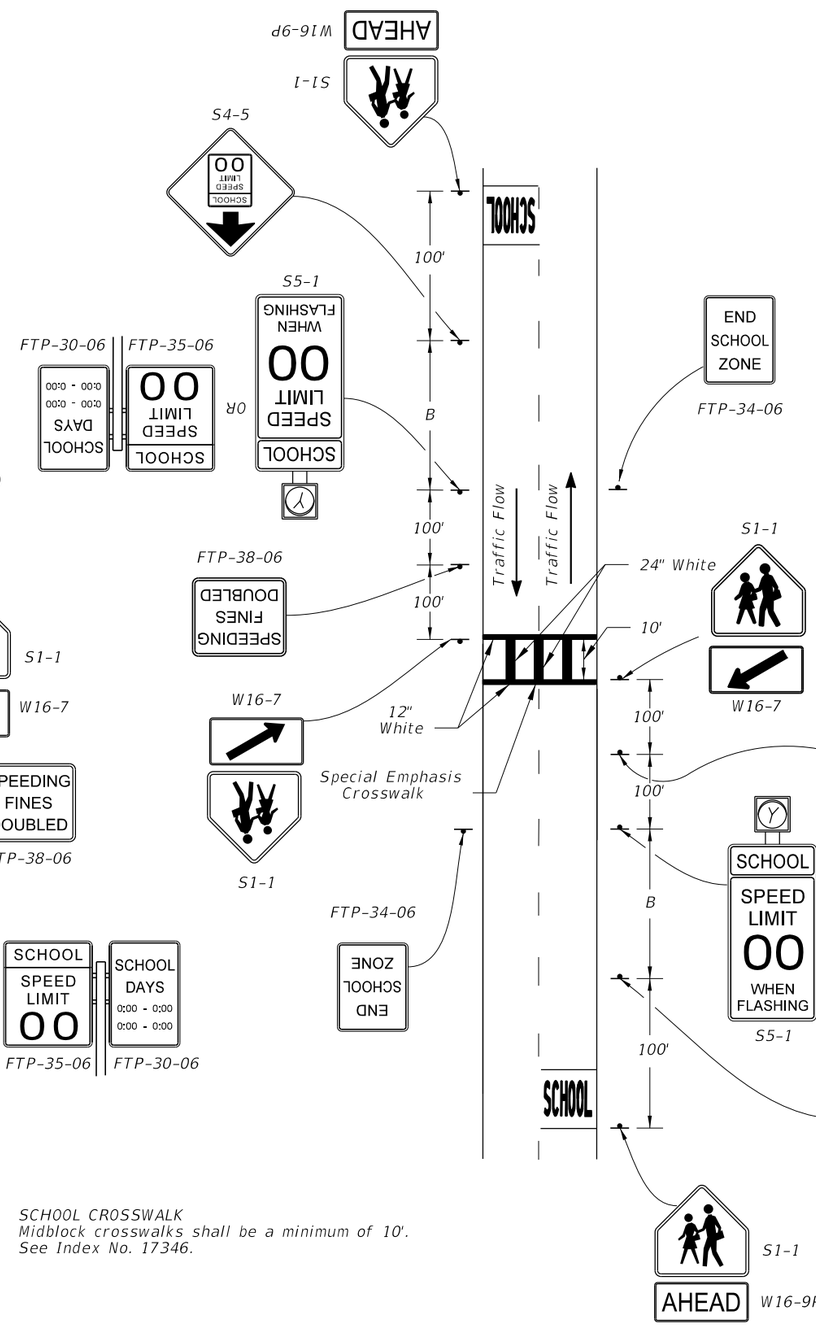

5. TRAFFIC CONTROL DEVICES FOR A SCHOOL CROSSWALK WITHOUT A SPEED REDUCTION (2 LANE-2 WAY TRAFFIC)

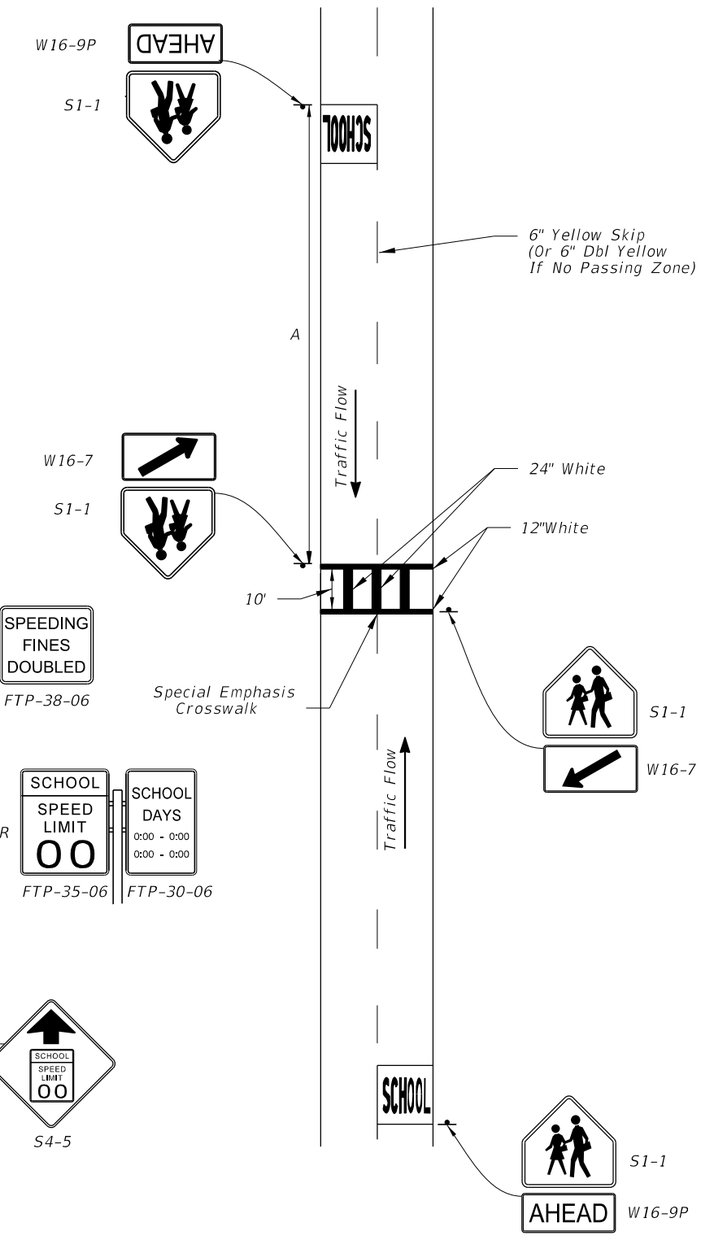

LAST REVISION	REVISION	DESCRIPTION:	FY 2016-17 DESIGN STANDARDS	SCHOOL SIGNS & MARKINGS	INDEX NO.	SHEET NO.
01/01/12					17344	2 of 6

12/3/2015 11:44:37 AM

6. TRAFFIC CONTROL DEVICES FOR A REDUCED SPEED ZONE AT A SCHOOL CROSSWALK WITH OVERHEAD FLASHING BEACON SPEED LIMIT SIGNS (4 LANES UNDIVIDED-2 WAY TRAFFIC) (MIDBLOCK OR ON THRU STREET AT AN INTERSECTION)

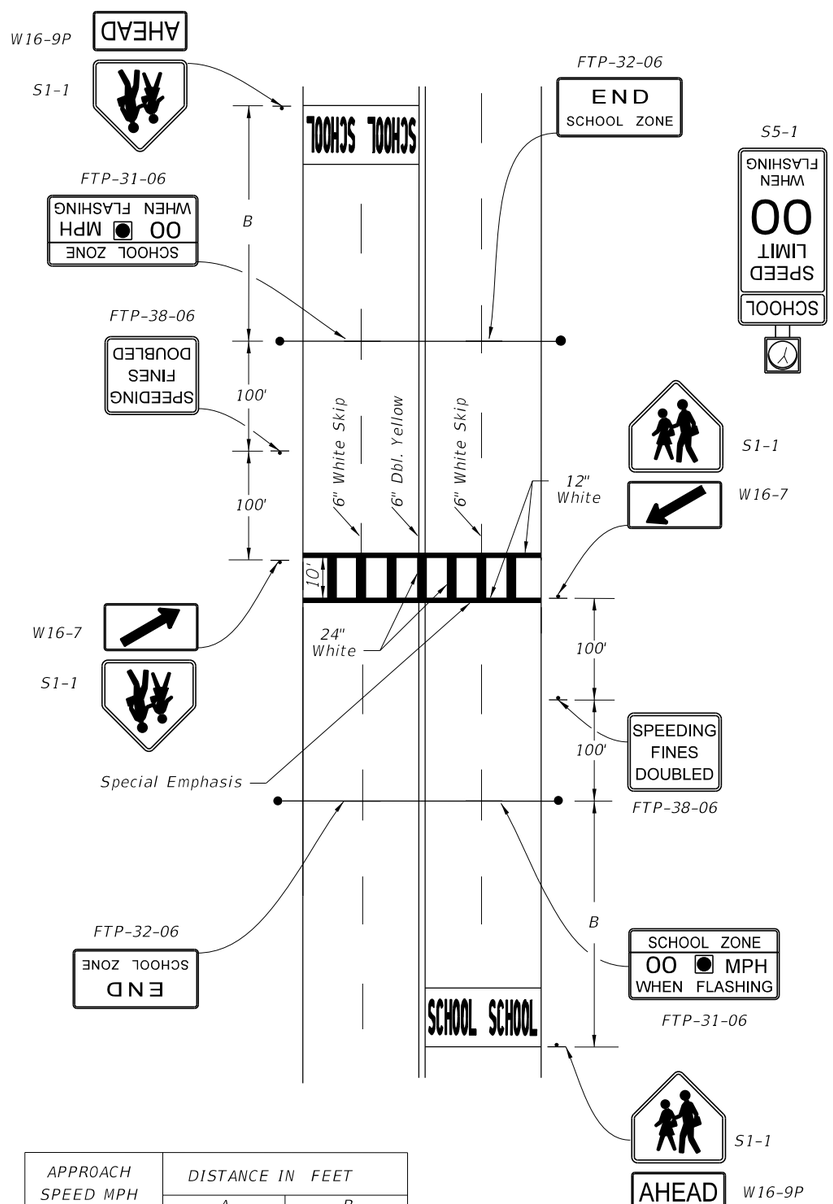

APPROACH SPEED MPH	DISTANCE IN FEET	
	A	B
25 or Less	200'	100' Min.
26 To 35	250'	100' Min.
36 To 45	300'	100'
46 To 55	325'	125'

SCHOOL CROSSWALK
Midblock crosswalk shall be a minimum of 10'.
See Index No. 17346.

7. TRAFFIC CONTROL DEVICES FOR A REDUCED SPEED ZONE AT A SCHOOL CROSSWALK WITH OVERHEAD OR GROUND MOUNTED FLASHING BEACON SPEED LIMIT SIGNS (4 LANES DIVIDED-2 WAY TRAFFIC)

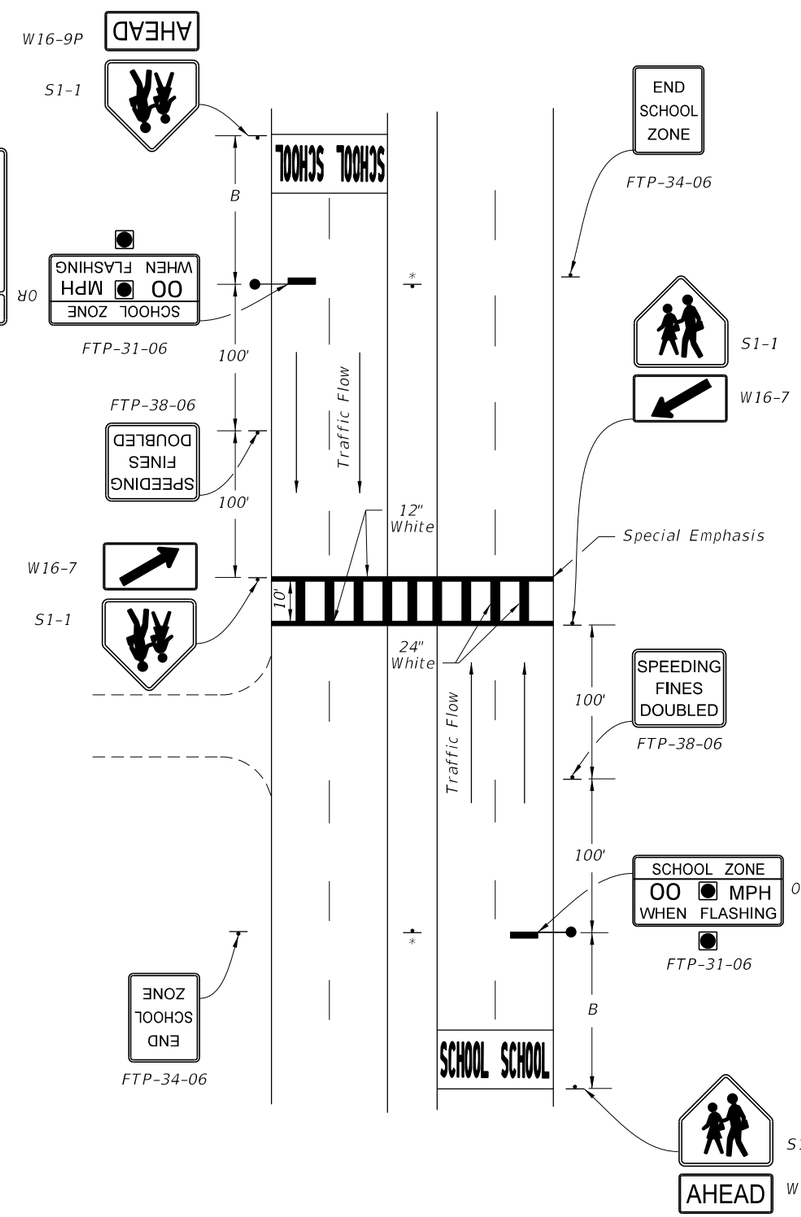

* NOTE- CONDITION 7:
Where engineering judgement determines the overhead structure is not suitable or cannot be installed due to site restrictions, S5-1 with flashing beacons on each side of the road may be substituted for the overhead structure.

8. TRAFFIC CONTROL DEVICES FOR SIGNALIZED MIDBLOCK SCHOOL CROSSWALK

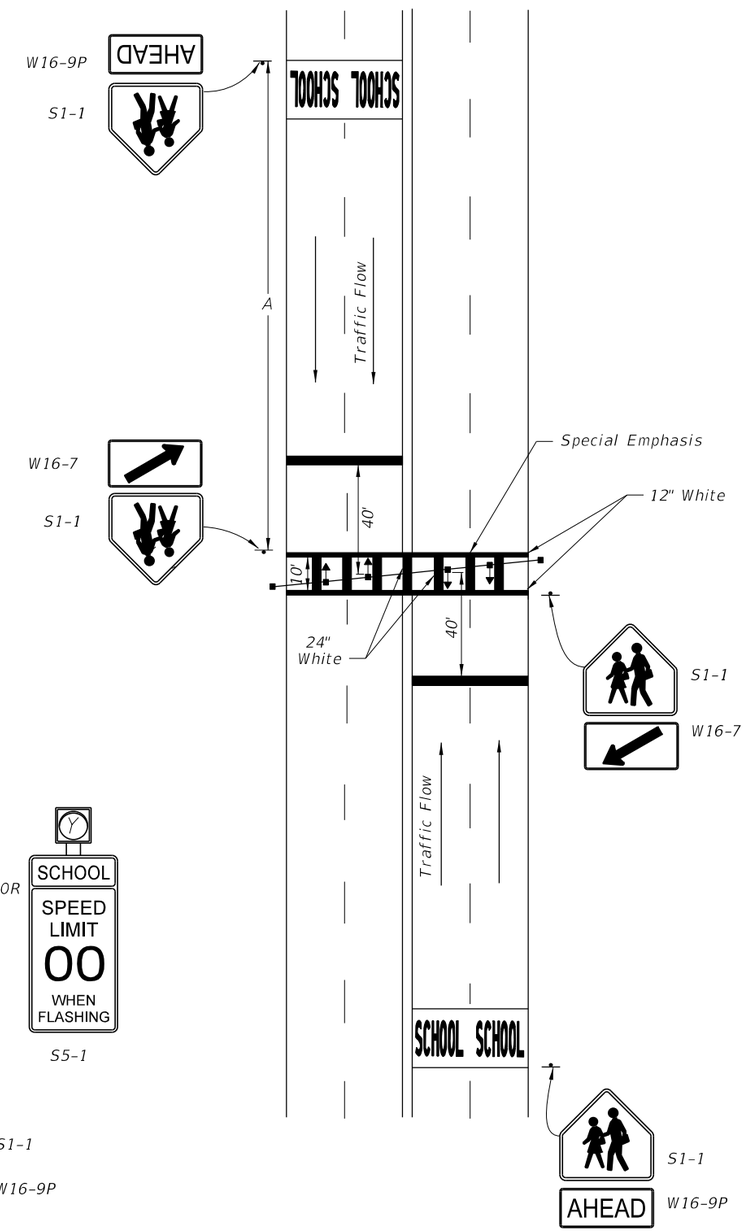

9. TRAFFIC CONTROL DEVICES AT SCHOOL ENTRANCES WITH LOW VOLUMES OF WALKING STUDENTS

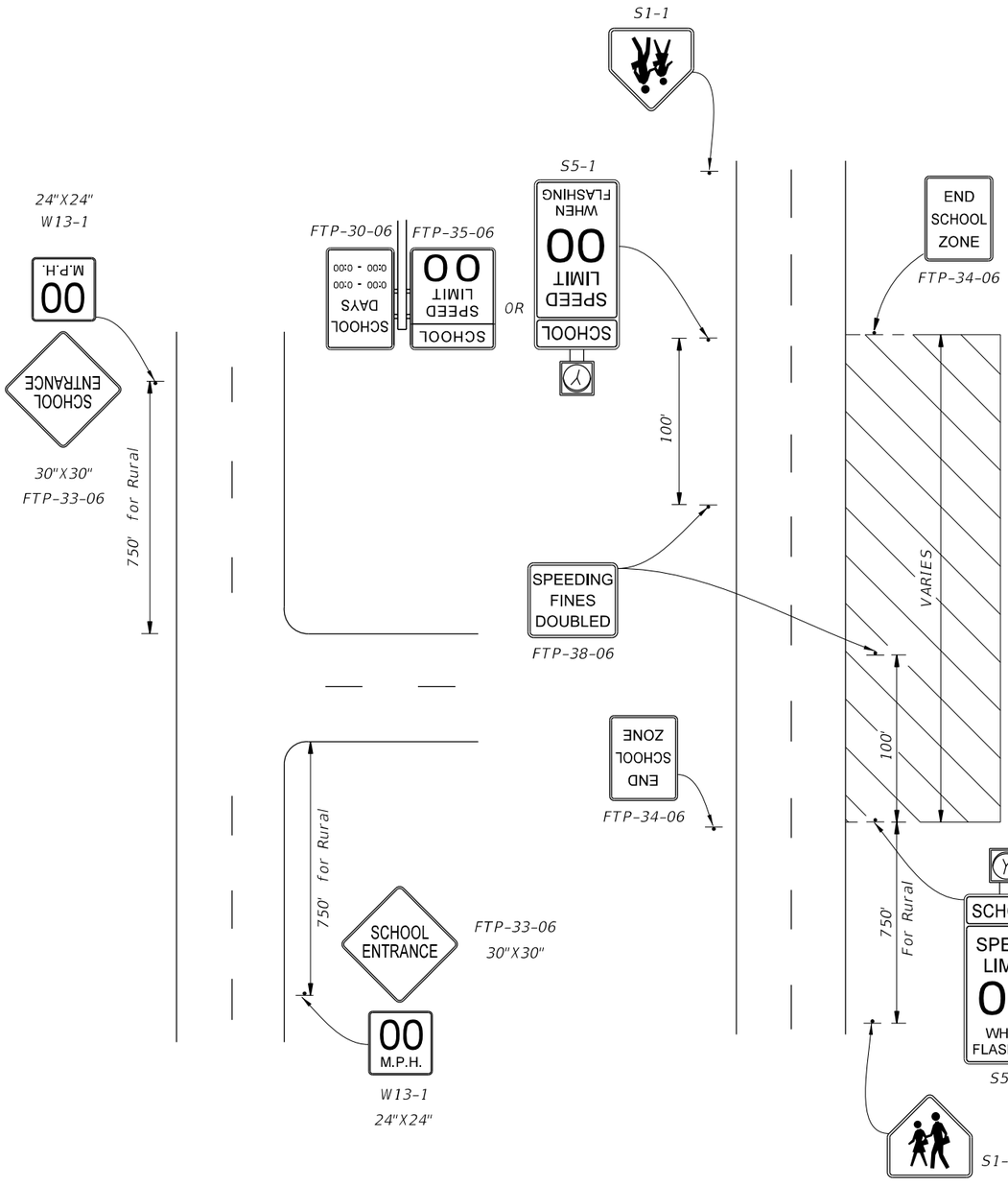

10. TRAFFIC CONTROL DEVICES FOR A TYPICAL SCHOOL ZONE FRONTING THE SCHOOL PROPERTY

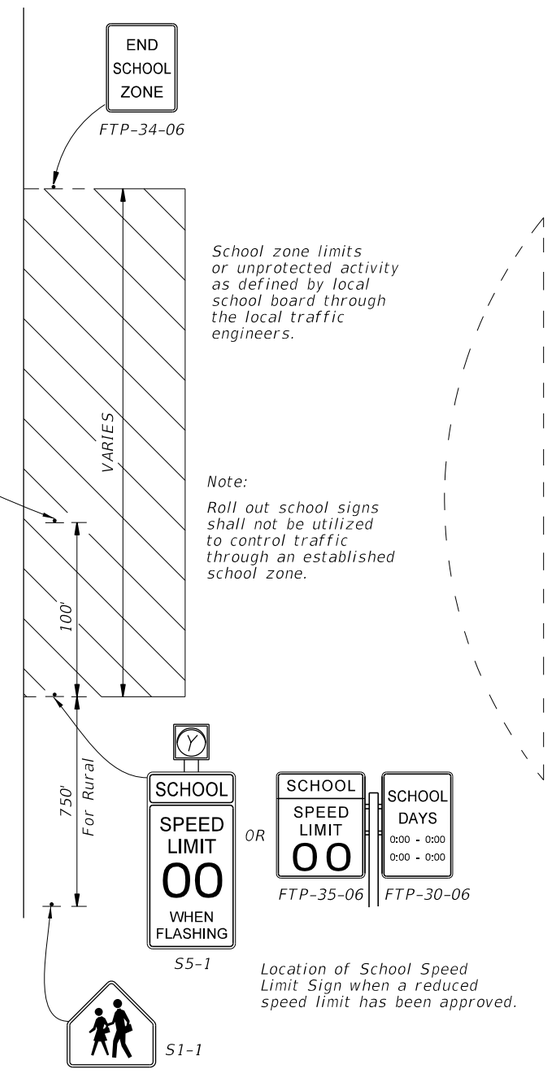

School zone limits or unprotected activity as defined by local school board through the local traffic engineers.

Note:

Roll out school signs shall not be utilized to control traffic through an established school zone.

Location of School Speed Limit Sign when a reduced speed limit has been approved.

11. SCHOOL BUS STOP

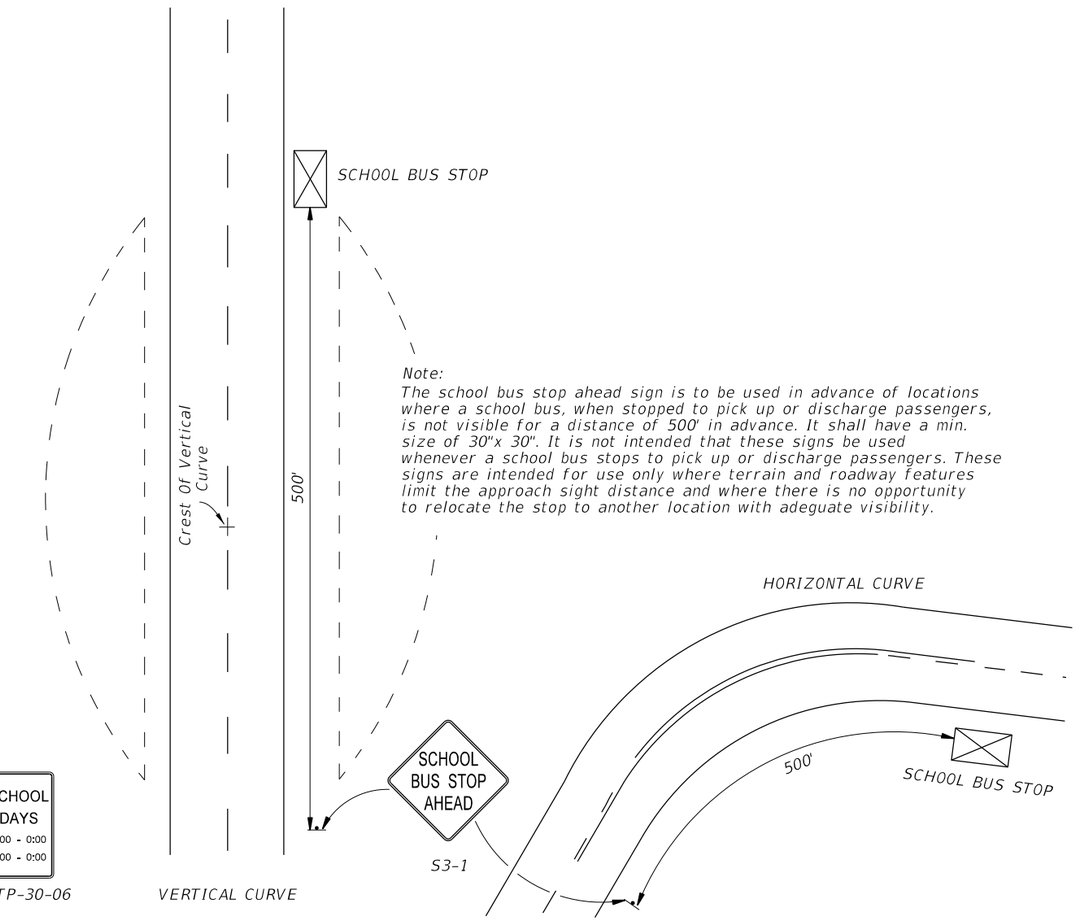

Note:
The school bus stop ahead sign is to be used in advance of locations where a school bus, when stopped to pick up or discharge passengers, is not visible for a distance of 500' in advance. It shall have a min. size of 30"x 30". It is not intended that these signs be used whenever a school bus stops to pick up or discharge passengers. These signs are intended for use only where terrain and roadway features limit the approach sight distance and where there is no opportunity to relocate the stop to another location with adequate visibility.

These signs are intended for use only at those few locations where the school entrance is not evident to the motorist, and must be approved in advance by the responsible traffic engineering authority.

12/3/2015 11:44:40 AM

LAST REVISION	REVISION	DESCRIPTION:	FDOT FY 2016-17 DESIGN STANDARDS	SCHOOL SIGNS & MARKINGS	INDEX NO.	SHEET NO.
07/01/09					17344	4 of 6

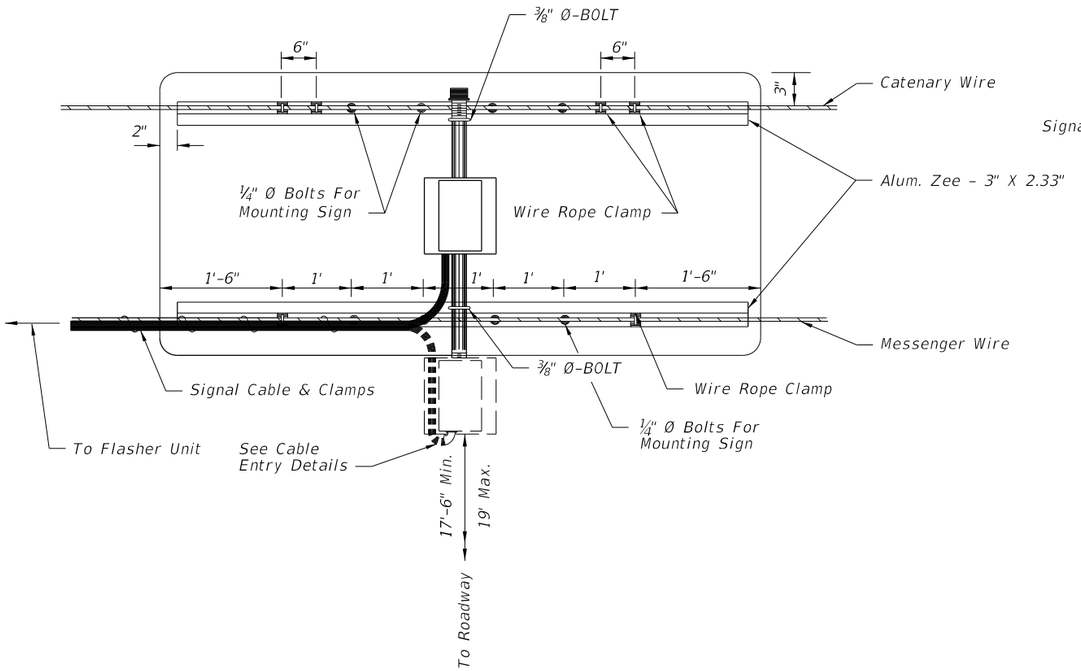

REAR VIEW

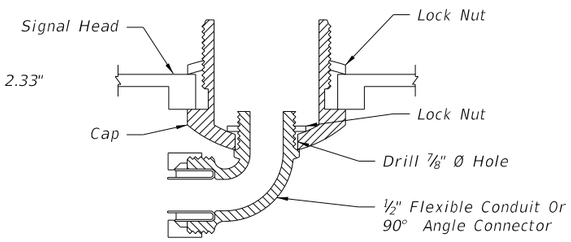

CABLE ENTRY DETAIL

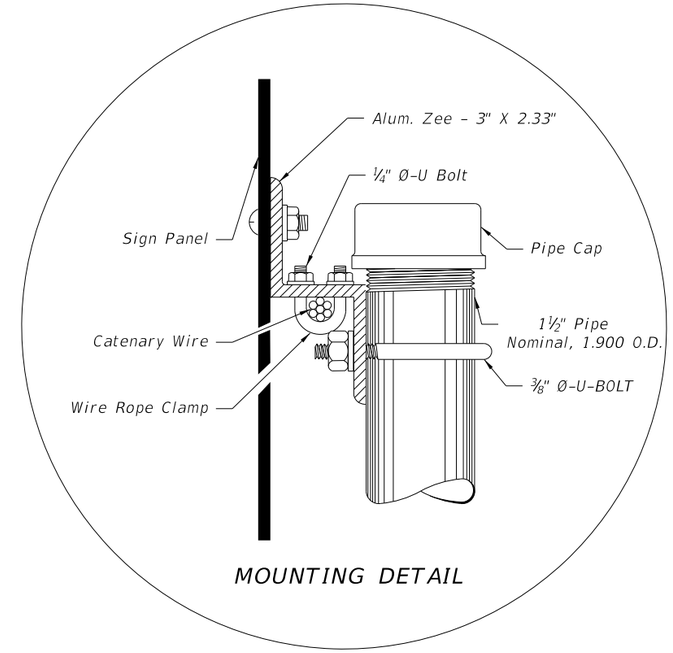

MOUNTING DETAIL

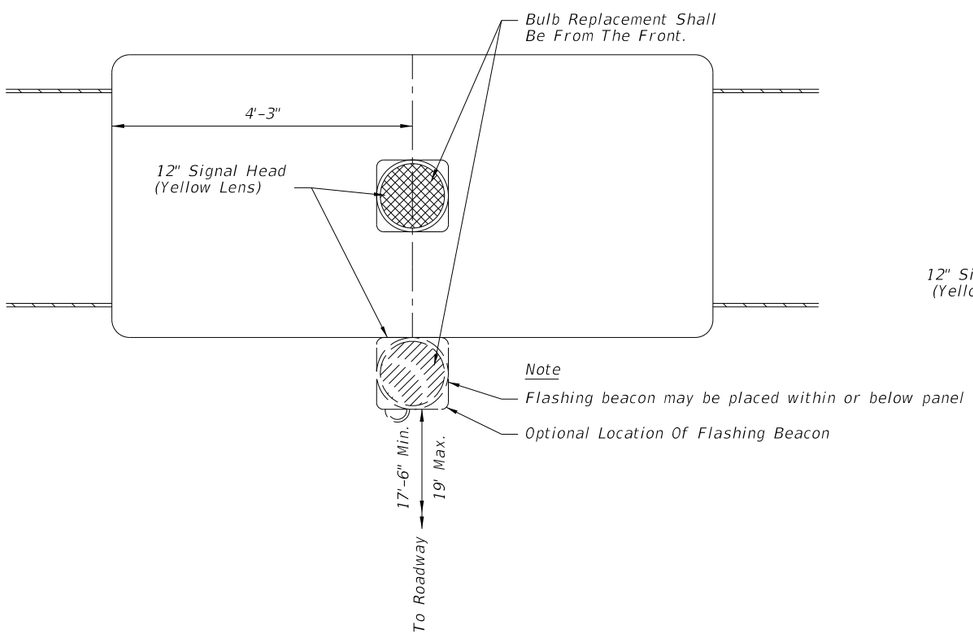

FRONT VIEW

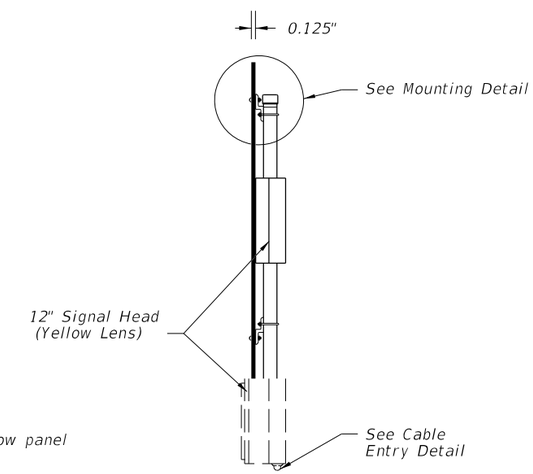

SIDE VIEW

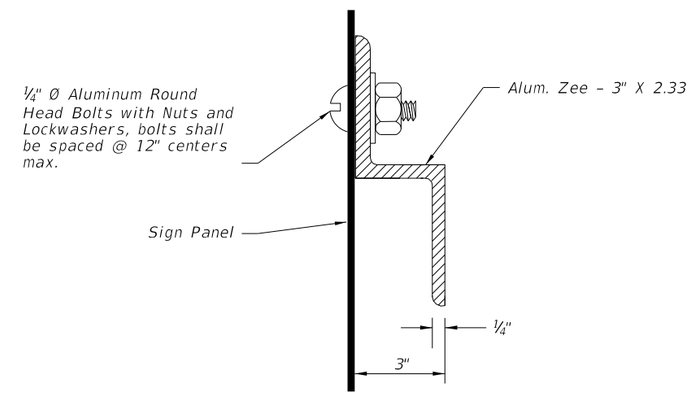

ZEE SECTION DETAIL

Flasher unit and cabinet to be placed on the strain pole supporting overhead sign assembly or on service pole. The flasher unit not to overhang private property or sidewalk.

12/3/2015 11:44:40 AM

LAST REVISION	REVISION	DESCRIPTION:			INDEX NO.	SHEET NO.
07/01/14			FY 2016-17 DESIGN STANDARDS	SCHOOL SIGNS & MARKINGS	17344	5 of 6

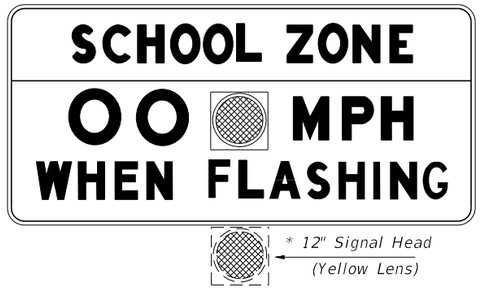

FTP-31-06

OVERHEAD STANDARD

* Flashing Beacon May Be Placed Within Or Below Panel

FTP-32-06

FTP-38-06

FTP-33-06

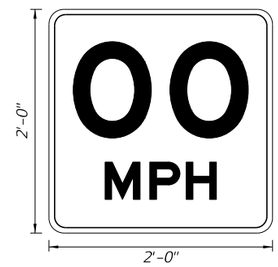

W13-1

SPEED LIMIT ASSEMBLY

S4-5

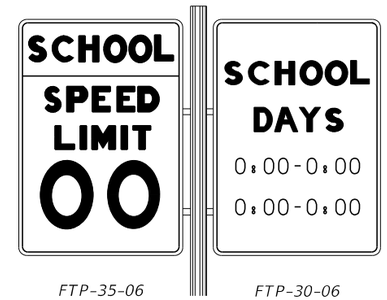

FTP-35-06 FTP-30-06

S1-1

S3-1

FTP-34-06

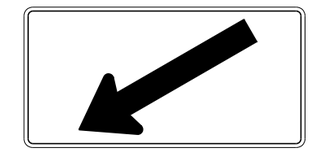

W16-7

W16-9P

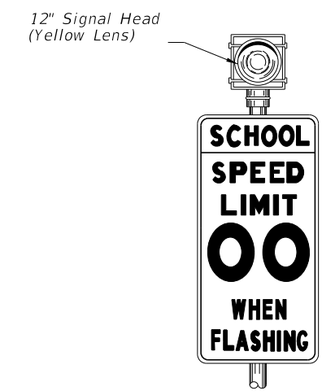

S5-1

Ground Mount Standard

Notes:

1. Standard size signs should be used whenever possible. Minimum sizes may be used only on low volume, low speed (less than 35 mph) streets. Special sizes should be used on expressway facilities where special emphasis is needed.
2. The value of the actual school zone speed limit shall be determined by the District Traffic Operations Engineer in cooperation with local school superintendents. In no case shall it be less than the 15 mph min. as set by law.
3. See Index No. 17355 for sign details.
4. When fluorescent yellow-green background color is used, a systematic approach featuring one background color within a zone or area should be used. The mixing of standard yellow and fluorescent yellow green background within a zone should be avoided.

Note:
Existing ground mount school speed limit signs utilizing a single 8" min. size beacon or two 6" min. size beacons inside the sign border are considered meeting the standard. However, replacement or upgrading of these school speed limit signs shall conform to the above standard. Numerical speed limit displayed shall be established by appropriate regulatory authorities.

12/3/2015 11:44:41 AM

LAST REVISION	REVISION	DESCRIPTION:			INDEX NO.	SHEET NO.
07/01/09			FY 2016-17 DESIGN STANDARDS	SCHOOL SIGNS & MARKINGS	17344	6 of 6

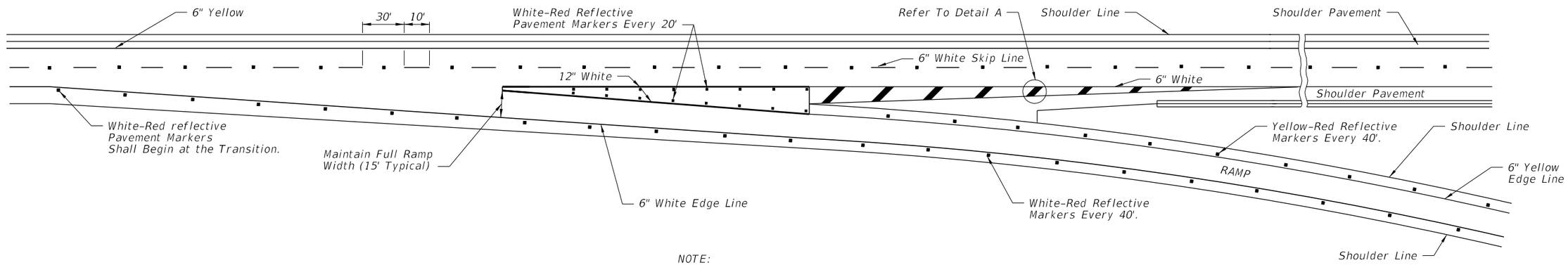

NOTE:
Reflective pavement markers are installed adjacent to the edge line.

NORMAL TAPERED EXIT

(TWO THRU LANES)

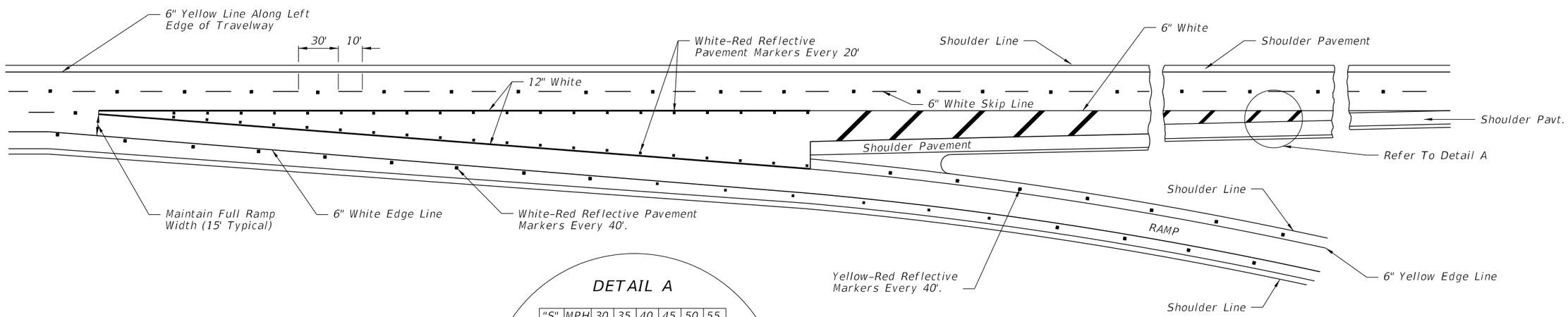

NORMAL TAPERED EXIT ONLY

(TWO THRU LANES - THREE APPROACH LANES)

DETAIL A

"S"	MPH	30	35	40	45	50	55
"X"	Ft.	20	20	40	40	60	60

Passenger Car, Daytime, Posted Speeds
Or 85th Percentile (Use Higher Value)

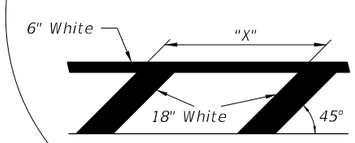

12/3/2015 11:44:42 AM

LAST REVISION	REVISION	DESCRIPTION:			INDEX NO.	SHEET NO.
07/01/14			FDOT FY 2016-17 DESIGN STANDARDS	INTERCHANGE MARKINGS	17345	1 of 4

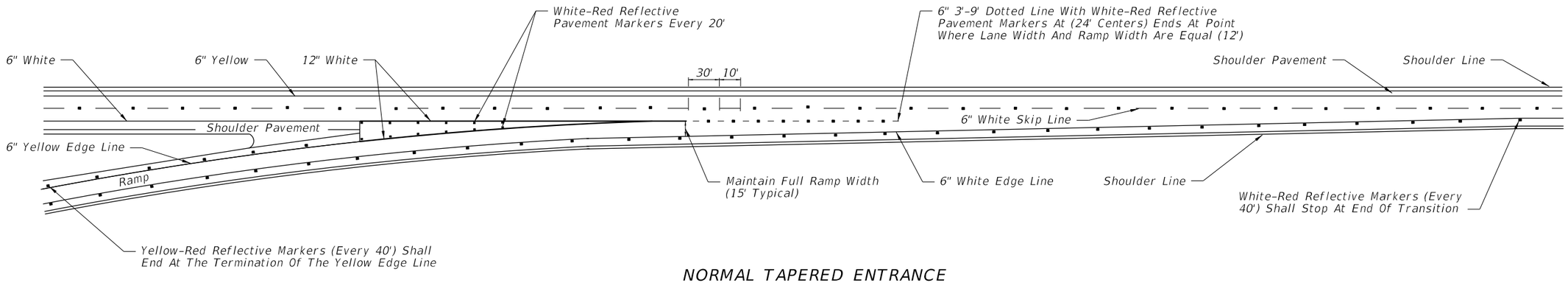

NORMAL TAPERED ENTRANCE

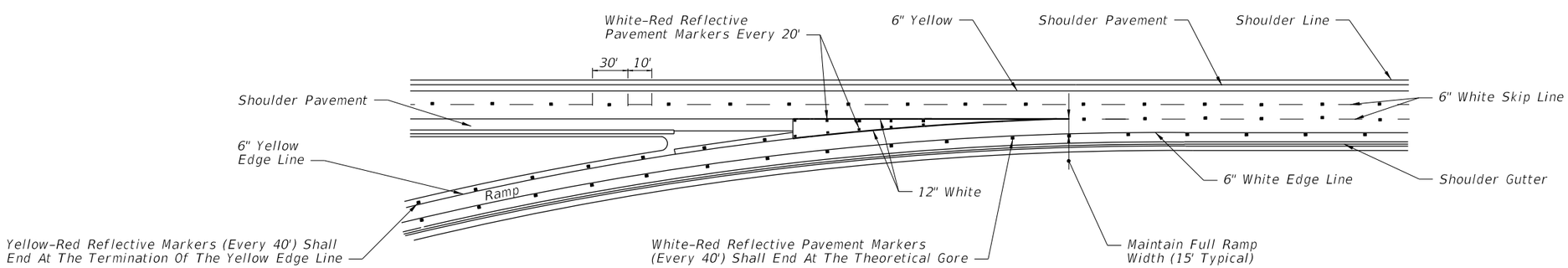

NORMAL TAPERED ENTRANCE
WITH ADDED LANE

12/3/2015 11:44:42 AM

LAST REVISION	REVISION	DESCRIPTION:			INDEX NO.	SHEET NO.
07/01/14			FY 2016-17 DESIGN STANDARDS	INTERCHANGE MARKINGS	17345	2 of 4

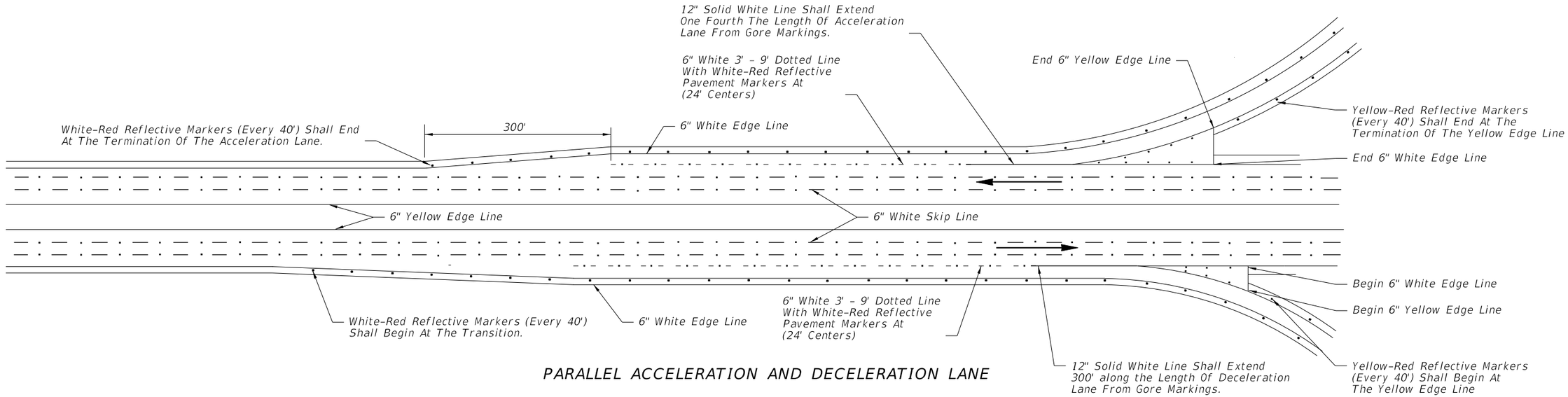

PARALLEL ACCELERATION AND DECELERATION LANE

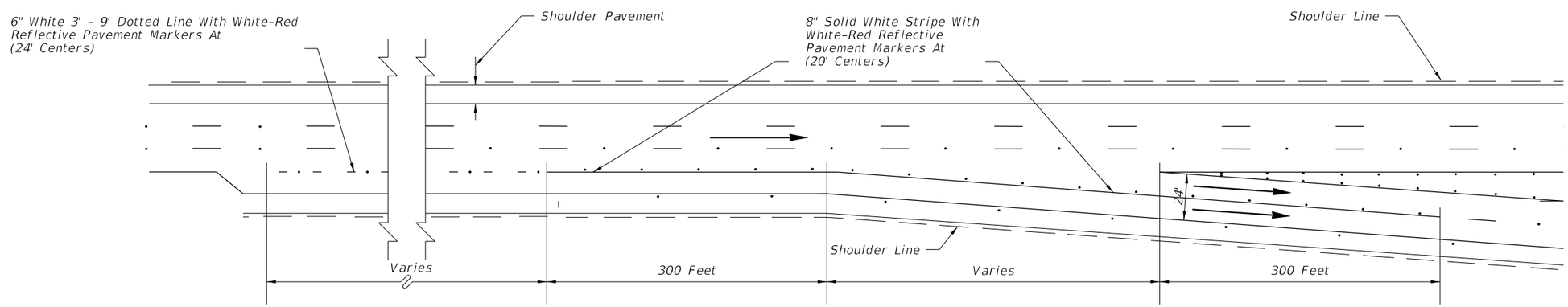

TYPICAL MARKINGS AT DUAL LANE EXITS

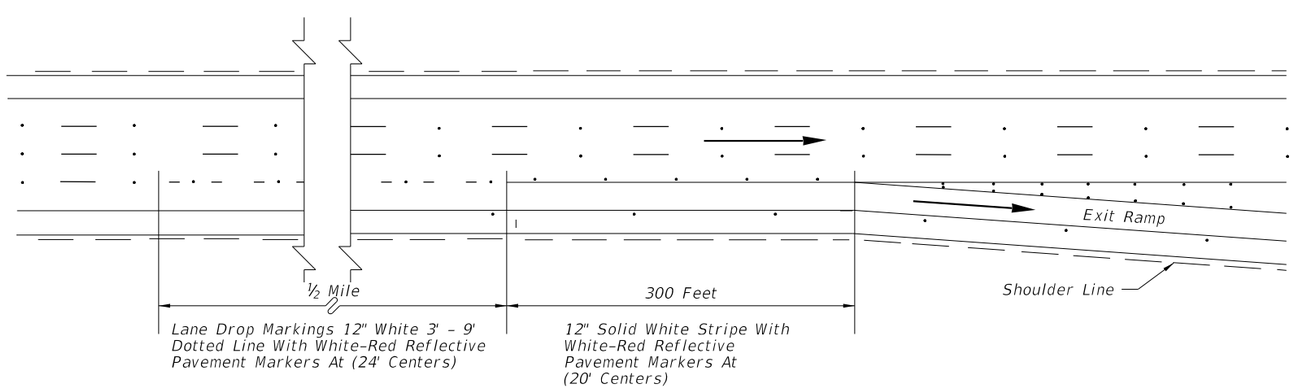

TYPICAL LANE DROP MARKINGS AT EXIT RAMPS

Note: Arrows indicate direction of travel and are not shown for pavement marking.

12/3/2015 11:44:43 AM

LAST REVISION	REVISION	DESCRIPTION:			INDEX NO.	SHEET NO.
07/01/15			FDOT FY 2016-17 DESIGN STANDARDS	INTERCHANGE MARKINGS	17345	3 of 4

Notes:

1. Post delineators spaced at 40' on curves of the entrance and exit of ramps. The spacing on the tangent portion of the ramp section shall be 300'. All delineators are to be setback 4' from shoulder break. Post delineators should not be discontinued in sections with guardrail.

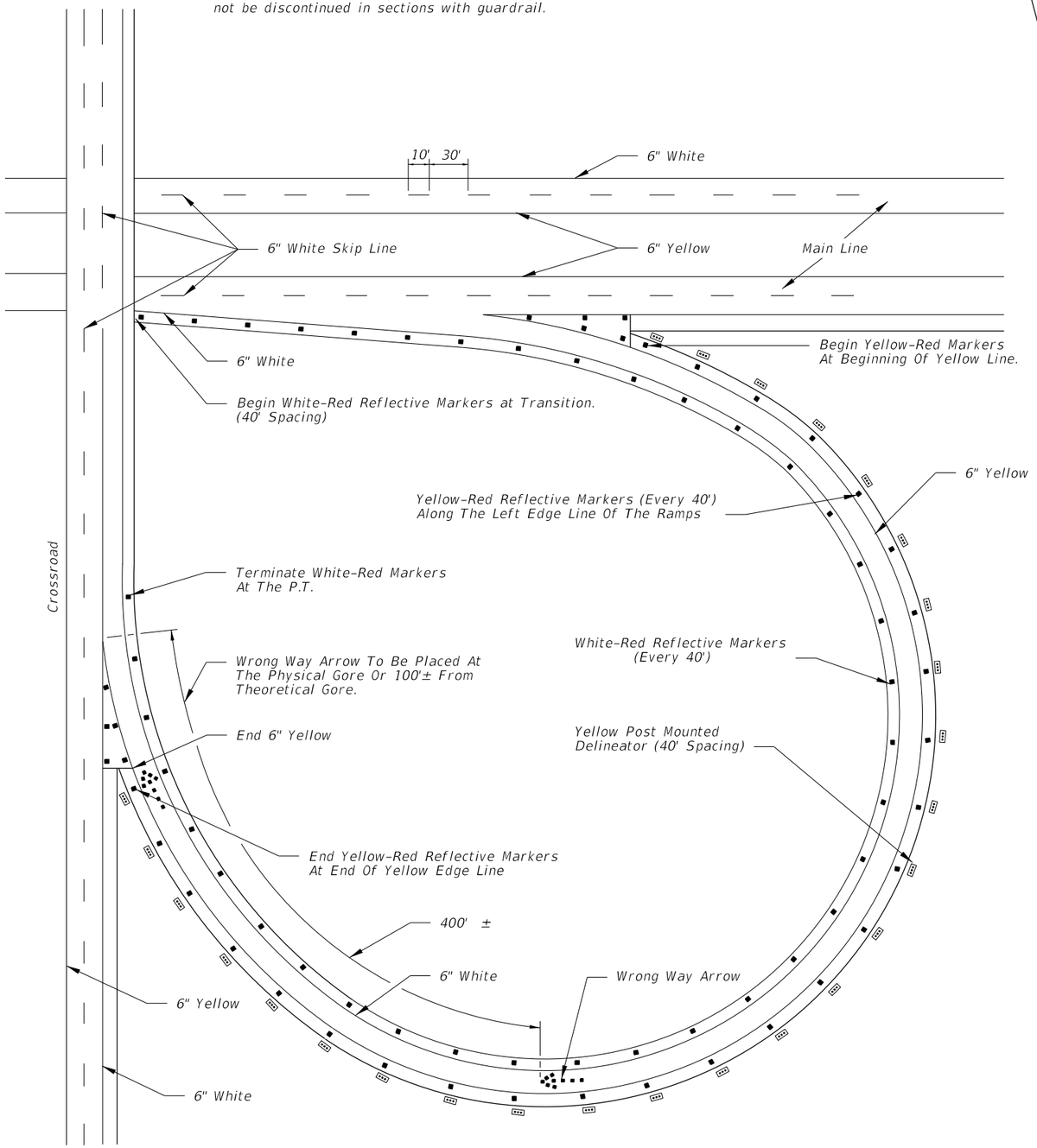

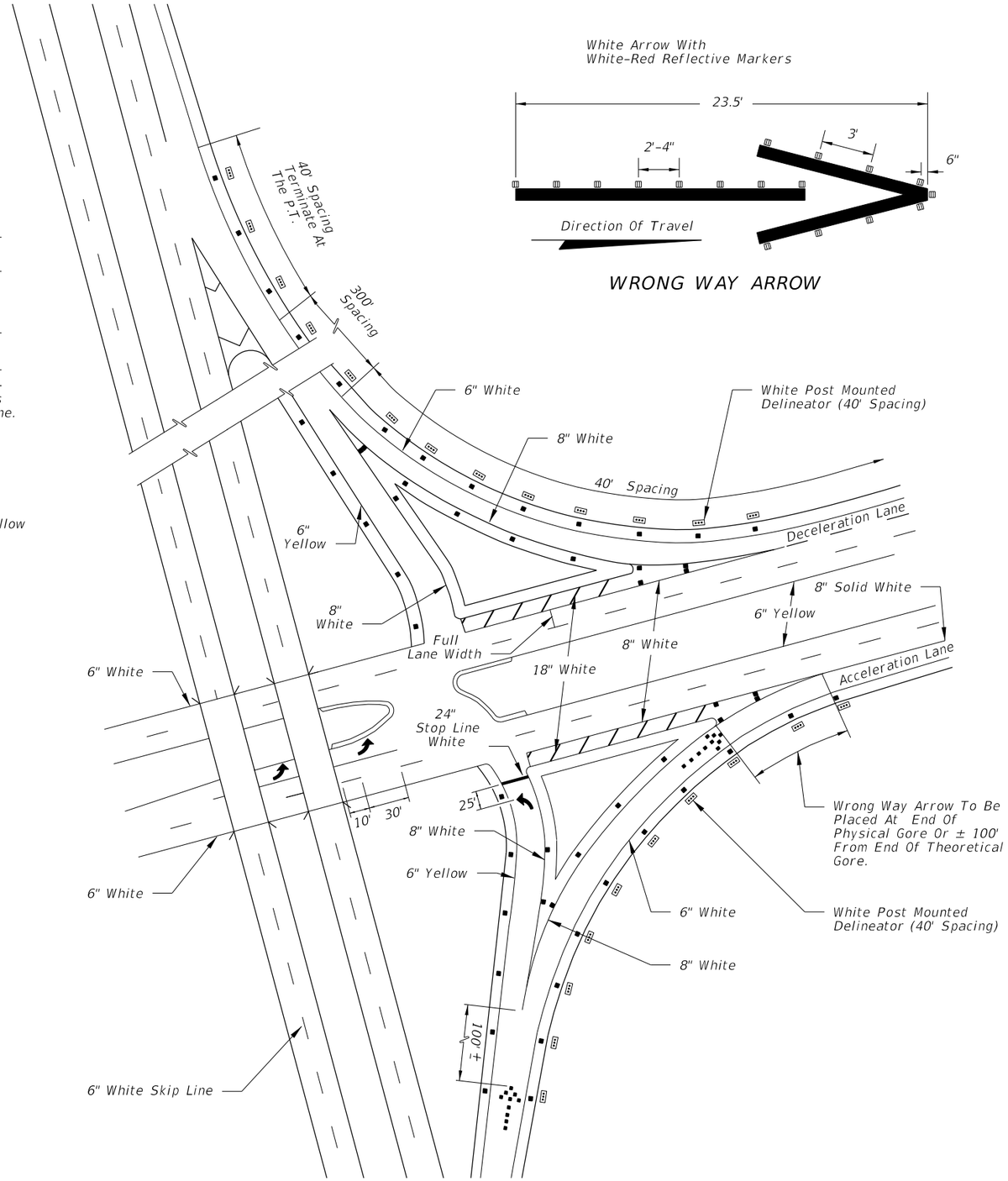

White Arrow With
White-Red Reflective Markers

WRONG WAY ARROW

12/3/2015 11:44:43 AM

LAST REVISION	REVISION	DESCRIPTION:	FDOT FY 2016-17 DESIGN STANDARDS	INTERCHANGE MARKINGS	INDEX NO.	SHEET NO.
07/01/15					17345	4 of 4

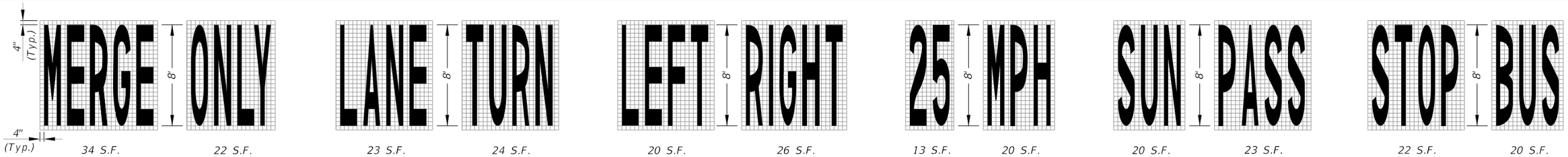

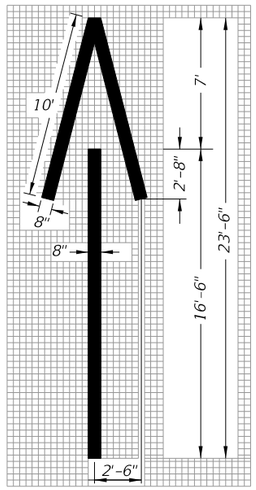

Wrong-Way Arrow

24 S.F.

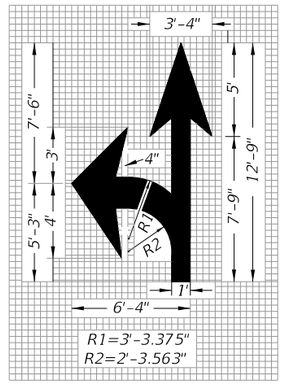

Turn and Through Lane-Use Arrow

29 S.F.

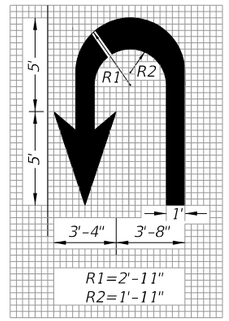

U Turn Lane-Use Arrow

27 S.F.

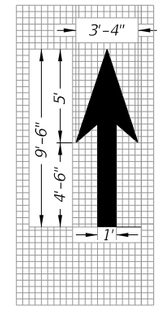

Through Lane-Use Arrow

12 S.F.

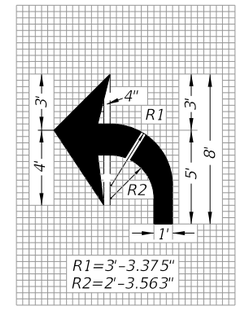

Turn Lane-Use Arrow (Left Turn Shown - Right Turn Similar by Opposite Hand)

17 S.F.

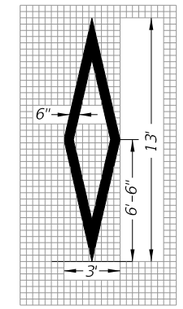

Preferential Lane Symbol

11 S.F.

PAVEMENT ARROW AND MESSAGE DETAILS NOTE: When arrow and pavement message are used together, the arrow shall be located down stream of the pavement message and shall be separated from the pavement message by a distance of 25' (Base of the arrow to the base of the message). Stop message shall be placed 25' back of stop line.

DIMENSIONS ARE WITHIN 1" ±

PAVEMENT ARROW AND MESSAGE DETAILS

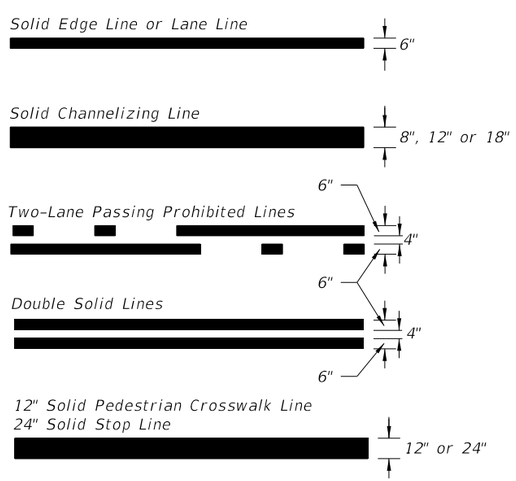

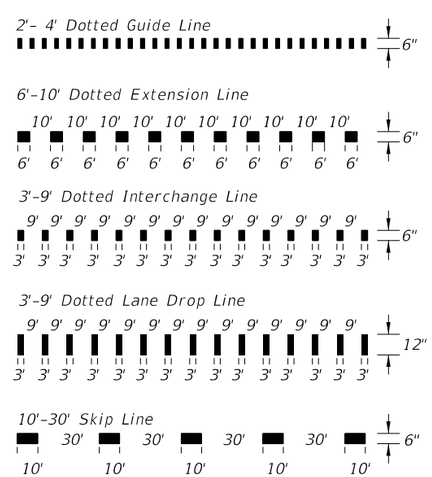

TYPES OF PAVEMENT MARKING LINES

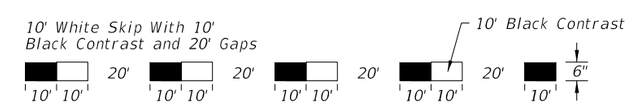

CONTRAST MARKINGS

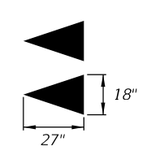

Yield Lines consist of five - 18" X 27" white triangles which face traffic. Equally space triangles within travel lane. Add one additional triangle using same spacing when a bike lane is present.

YIELD LINES

12/3/2015 11:44:44 AM

LAST REVISION	REVISION	DESCRIPTION:			INDEX NO.	SHEET NO.
01/21/15			FY 2016-17 DESIGN STANDARDS	SPECIAL MARKING AREAS	17346	1 of 14

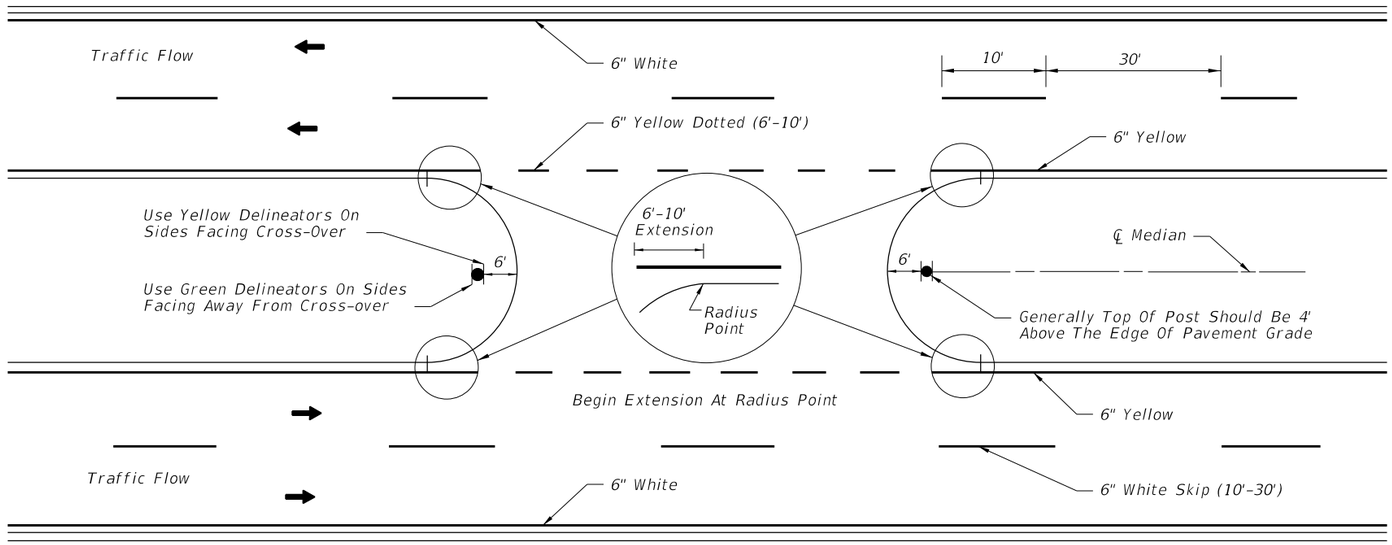

PAVEMENT MARKINGS AND DELINEATORS FOR MEDIAN CROSS-OVER

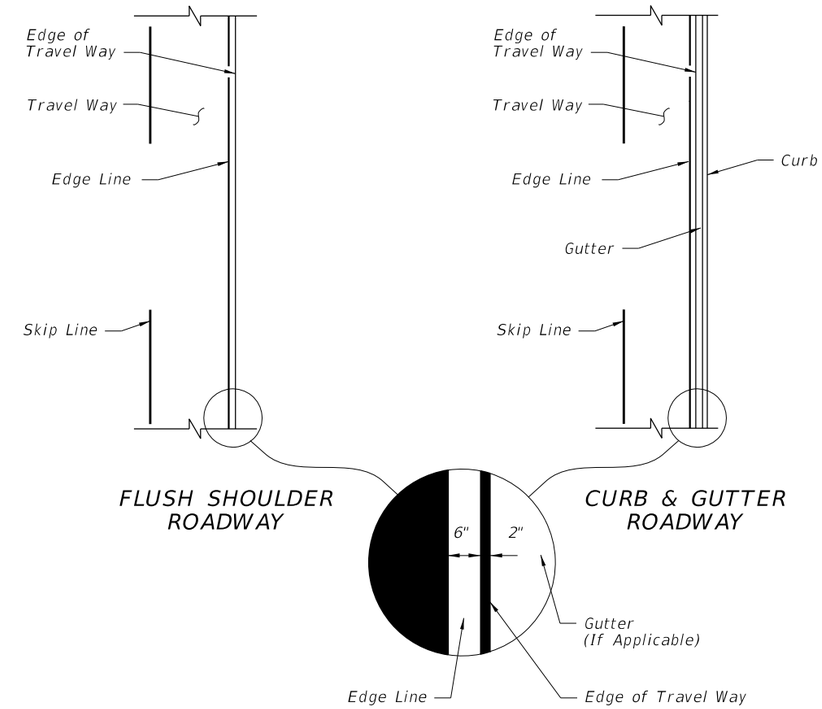

PLACEMENT OF EDGE LINES

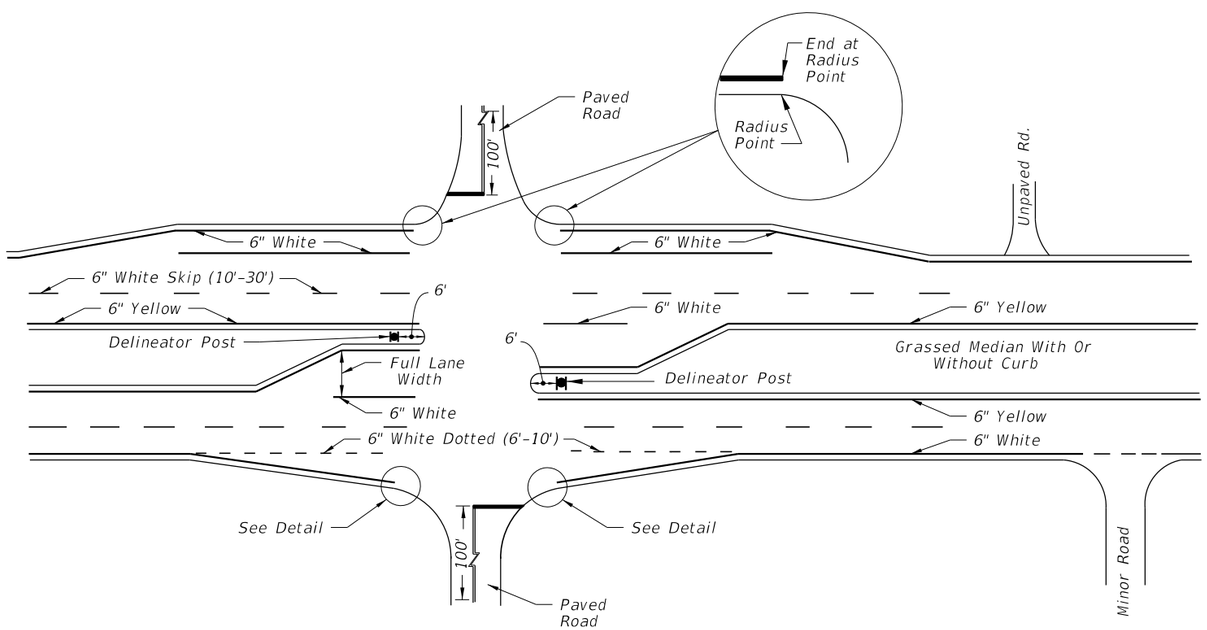

PAVEMENT MARKINGS FOR INTERSECTIONS WITH MAJOR AND MINOR ROADS

NOTE:

Markings applied to median noses shall be yellow in color.

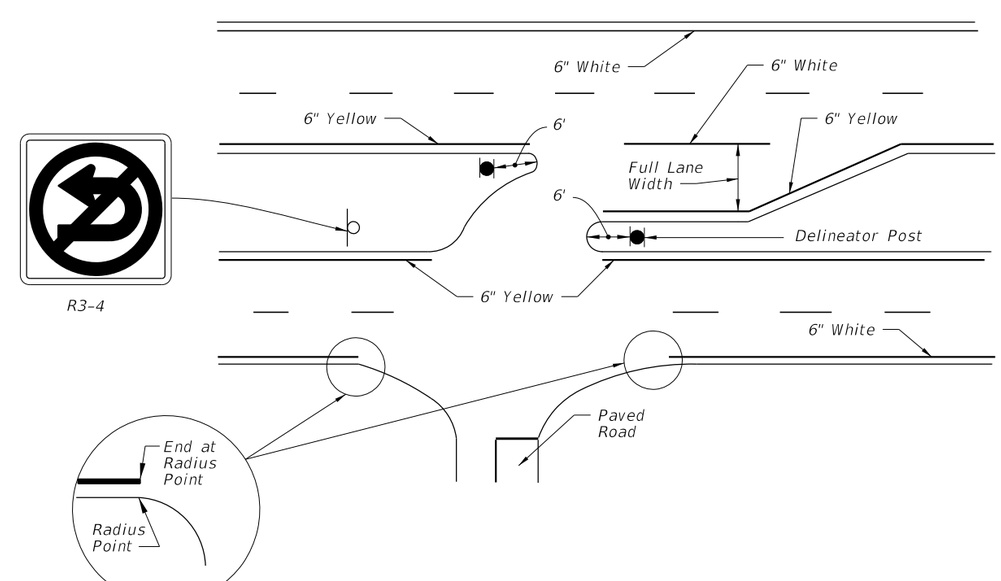

12/3/2015 11:44:45 AM

LAST REVISION	REVISION	DESCRIPTION:			INDEX NO.	SHEET NO.
01/21/15			FDOT FY 2016-17 DESIGN STANDARDS	SPECIAL MARKING AREAS	17346	2 of 14

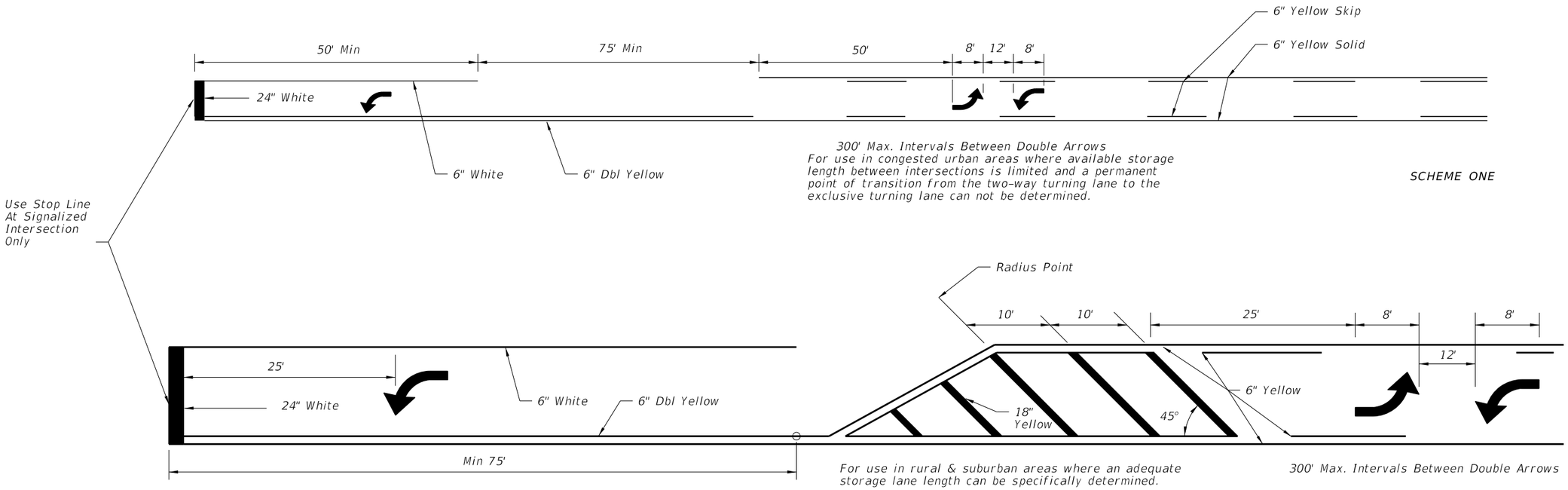

(WITH SINGLE LANE LEFT TURN CHANNELIZATION)

TWO WAY LEFT TURN LANE

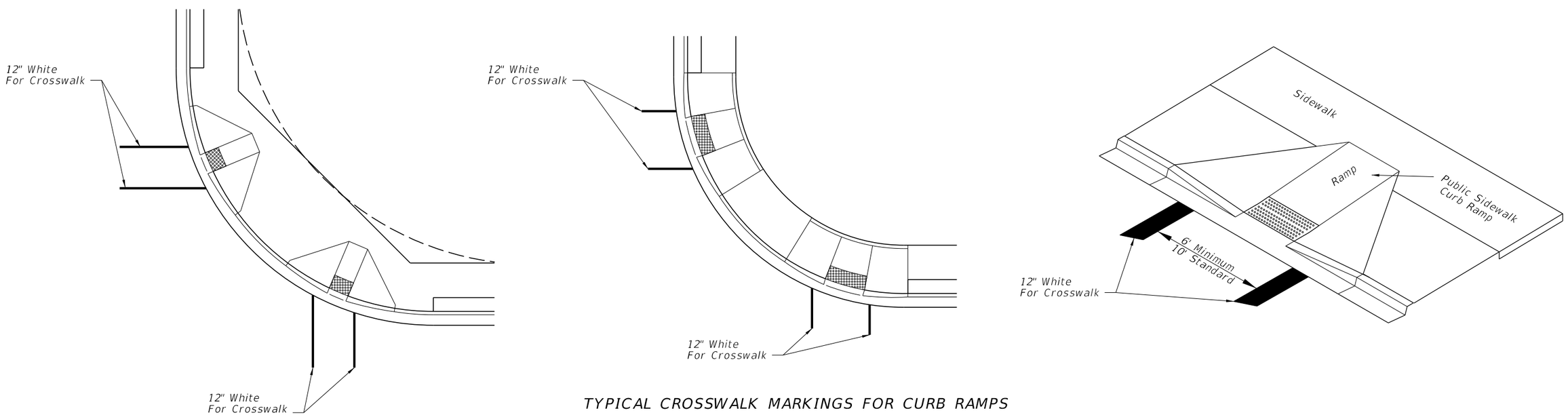

TYPICAL CROSSWALK MARKINGS FOR CURB RAMPS

12/3/2015 11:44:45 AM

LAST REVISION	REVISION	DESCRIPTION:			INDEX NO.	SHEET NO.
07/01/15			FY 2016-17 DESIGN STANDARDS	SPECIAL MARKING AREAS	17346	3 of 14

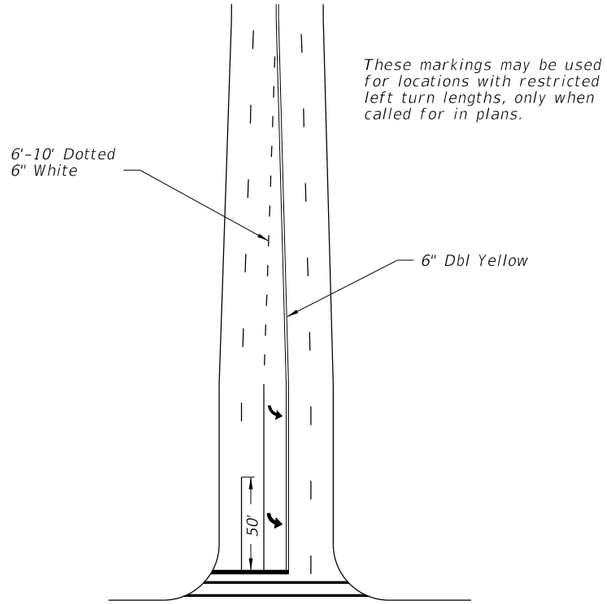

RESTRICTED LEFT TURN MARKING

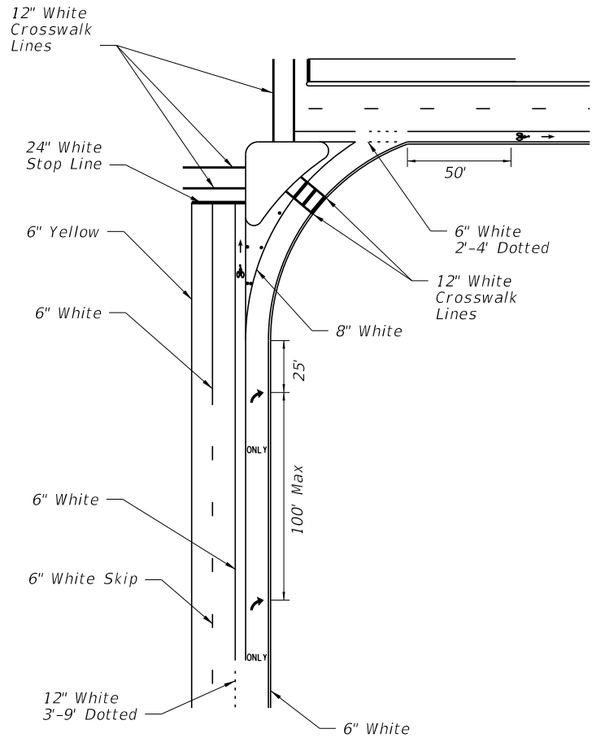

RIGHT TURN LANE DROP AND ISLAND DETAILS
LEFT TURN LANE DROP IS MIRROR IMAGE

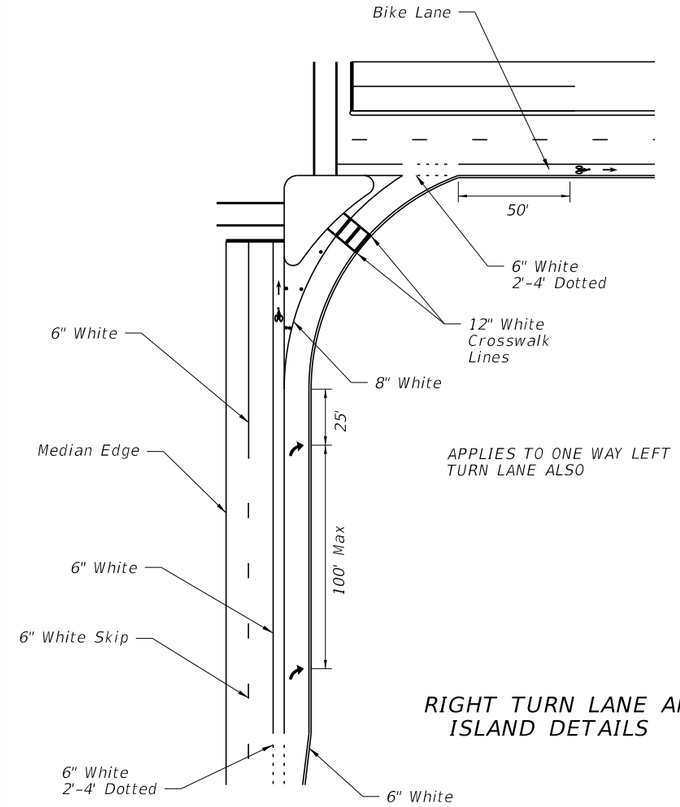

RIGHT TURN LANE AND ISLAND DETAILS

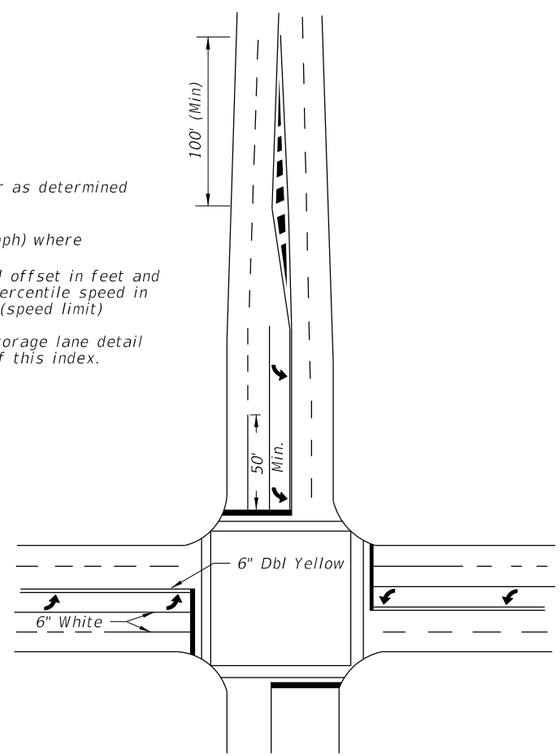

TYPICAL INTERSECTION 2 THRU LANES
PLUS LEFT TURN LANE, WITH CROSSWALK

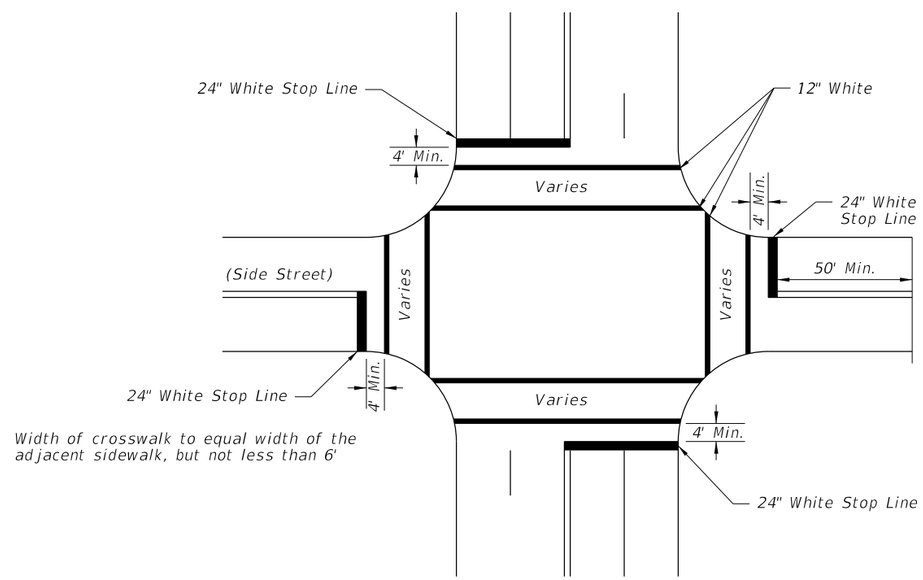

NOTES:

1. When public sidewalk curb ramps are present, refer Index No. 17344 and Index No. 304 for crosswalk widths.
2. Double yellow longitudinal center lines on all roadway approaches shall be extended back 100' for projects involving intersection improvements only.
3. When specified, "stop" message shall be placed 25' back of stop lines.

STOP BARS, CROSSWALKS AND DOUBLE CENTER LINE DETAILS

12/3/2015 11:44:46 AM

LAST REVISION	REVISION	DESCRIPTION:	FY 2016-17 DESIGN STANDARDS	SPECIAL MARKING AREAS	INDEX NO.	SHEET NO.
07/01/15					17346	4 of 14

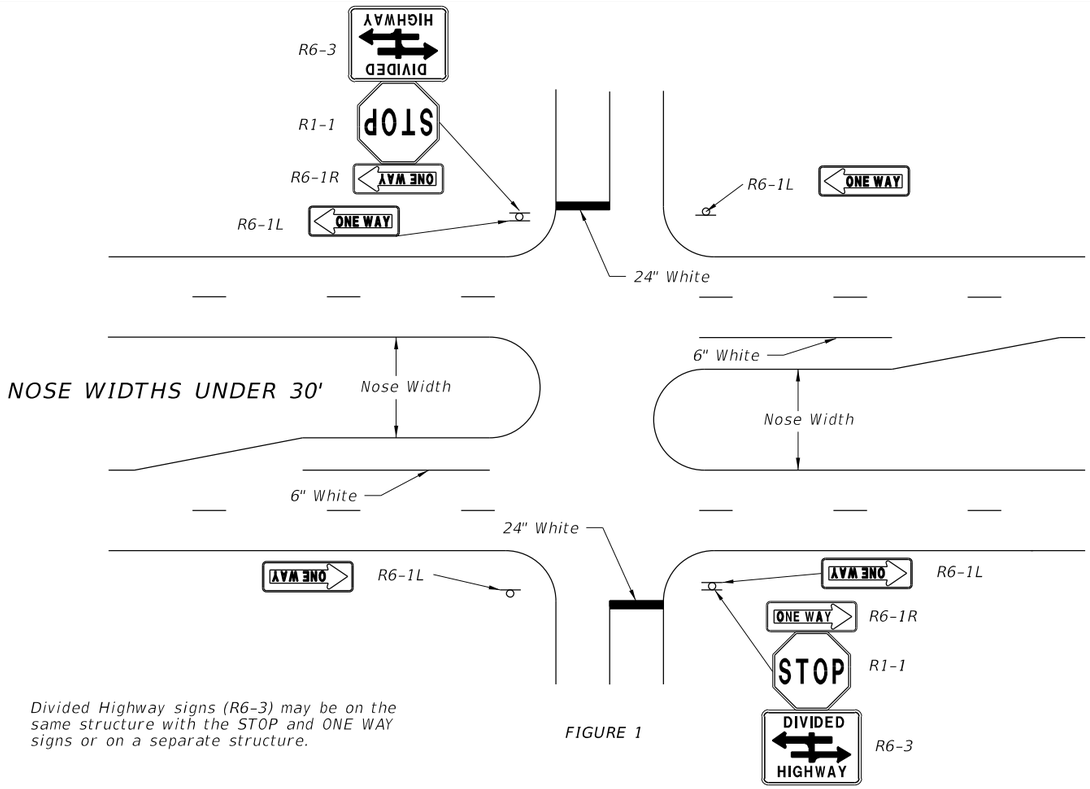

Divided Highway signs (R6-3) may be on the same structure with the STOP and ONE WAY signs or on a separate structure.

FIGURE 1

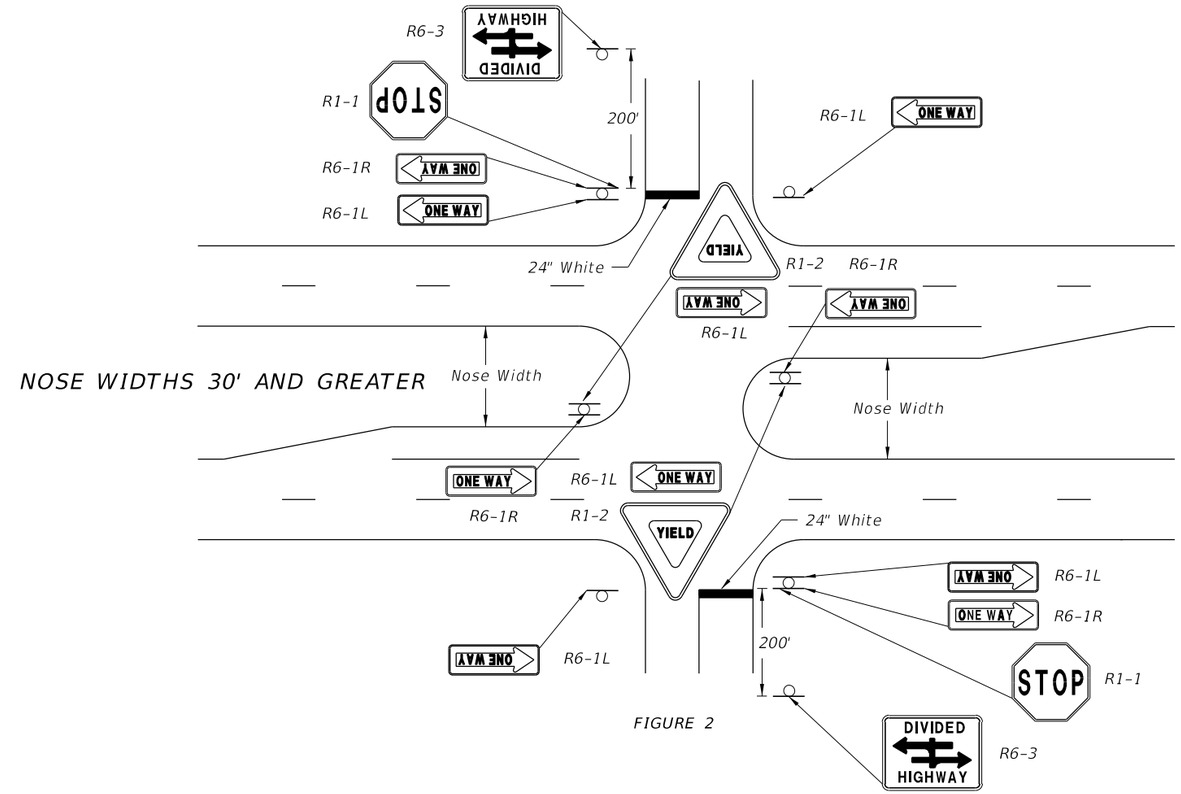

FIGURE 2

ONE-WAY SIGNS 0N DIVIDED HIGHWAY INTERSECTIONS

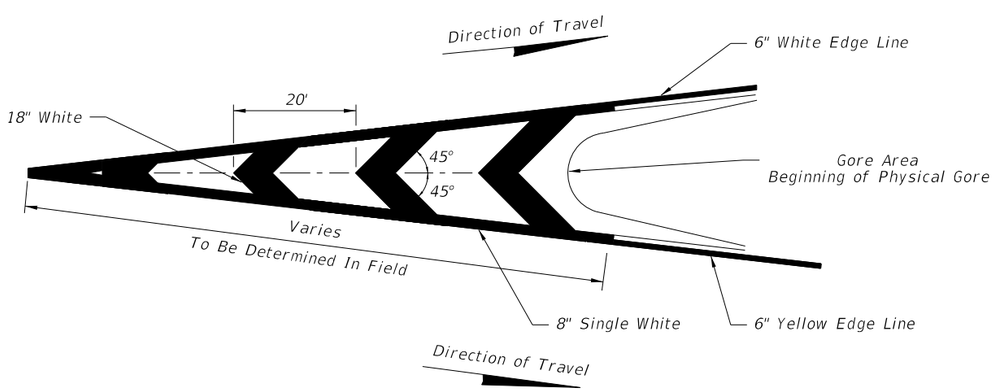

PAVEMENT MARKINGS FOR TRAFFIC CHANNELIZATION AT GORE

(TRAFFIC FLOWS IN SAME DIRECTION)

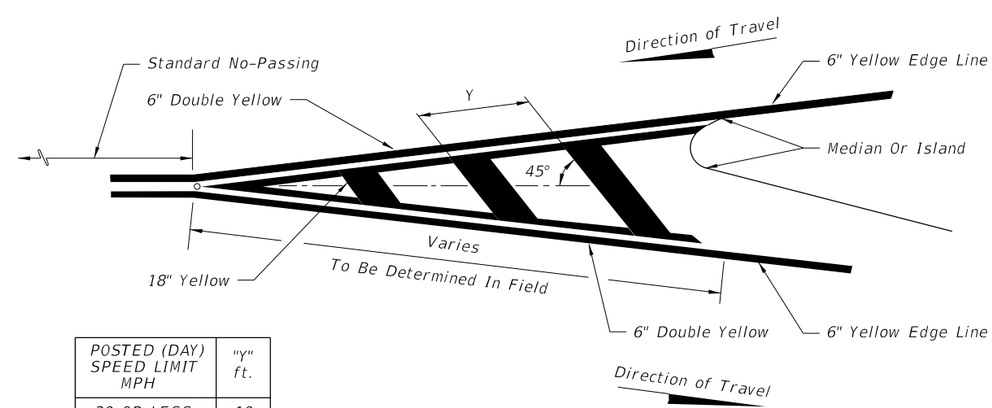

POSTED (DAY) SPEED LIMIT MPH	"Y" ft.
30 OR LESS	10
35	20
40	20
45	30
50 OR MORE	40

PAVEMENT MARKING FOR TRAFFIC SEPARATION

(TRAFFIC FLOWS IN OPPOSING DIRECTIONS)

12/3/2015 11:44:46 AM

LAST REVISION	REVISION	DESCRIPTION:	FY 2016-17 DESIGN STANDARDS	SPECIAL MARKING AREAS	INDEX NO.	SHEET NO.
07/01/13					17346	5 of 14

TYPICAL TRANSITION MARKING
COLOR SHALL BE THE SAME AS RESPECTIVE EDGE LINE

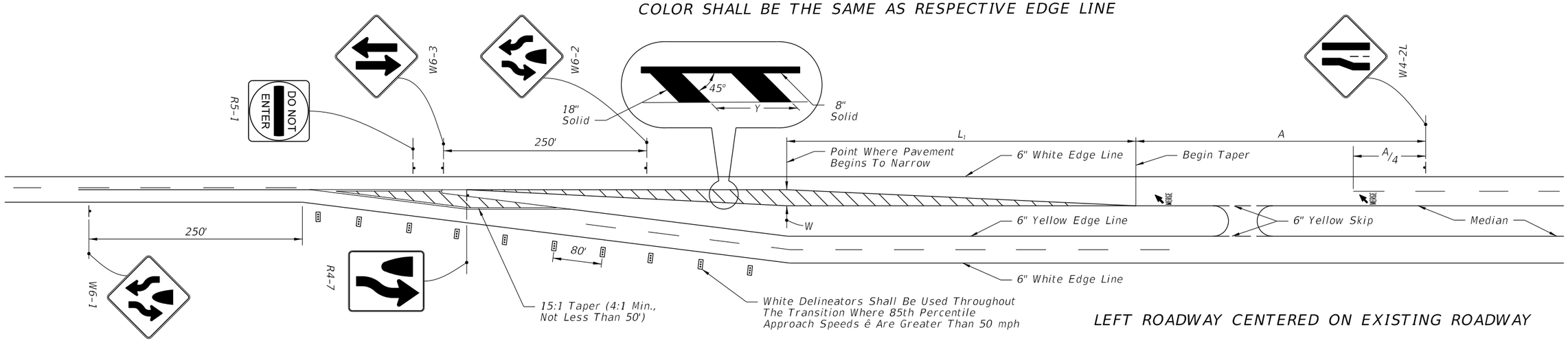

LEFT ROADWAY CENTERED ON EXISTING ROADWAY

**W / *S	TRANSITION DISTANCE L_1 (FEET)						
MPH	8	9	10	11	12	13	14
30	120	135	150	165	180	195	210
35	165	185	205	225	245	265	285
40	215	240	270	295	320	350	375
45	360	405	450	495	540	585	630
50	400	450	500	550	600	650	700
55	440	495	550	605	660	715	770
60	480	540	600	660	720	780	840
65	520	585	650	715	780	845	910

L_1=WS (45 MPH or Greater)

$L_1 = \frac{WS^2}{60}$ (≤40 MPH)

*Design Speed

**Lateral offset

SPEED* MPH	"A" (FT.)
55	950
50	850
45	750
40	650
30	450

POSTED (DAY) SPEED LIMIT MPH	"Y" (FT.)
30 OR LESS	10
35	20
40	20
45	30
50 OR MORE	40

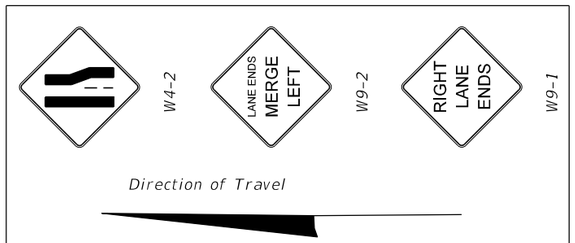

NOTE:
W9-1 & W9-2 are supplemental to the W4-2 sign and may be deleted if space is not available. The W9-1 should be used if only one supplemental sign is installed.

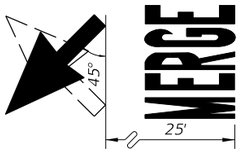

PAVEMENT MARKING DETAIL

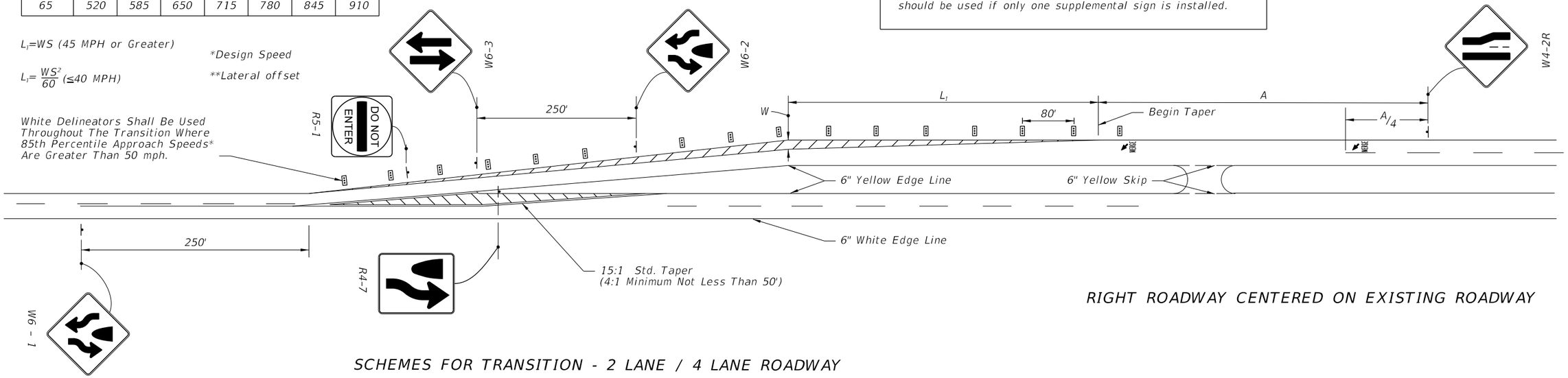

RIGHT ROADWAY CENTERED ON EXISTING ROADWAY

SCHEMES FOR TRANSITION - 2 LANE / 4 LANE ROADWAY

12/3/2015 11:44:47 AM

LAST REVISION	REVISION	DESCRIPTION:	FY 2016-17 DESIGN STANDARDS	SPECIAL MARKING AREAS	INDEX NO.	SHEET NO.
07/01/09					17346	6 of 14

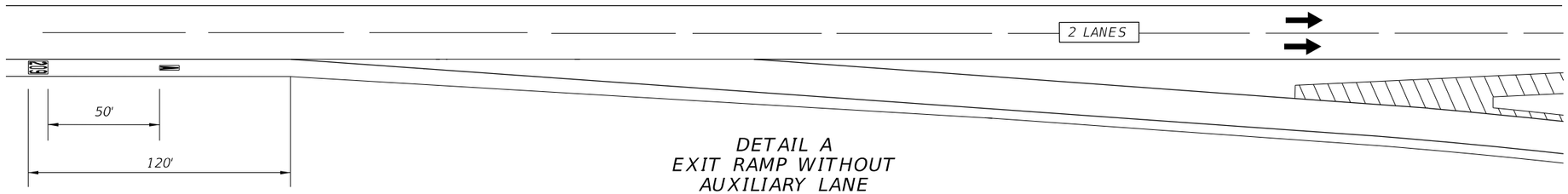

DETAIL A
EXIT RAMP WITHOUT
AUXILIARY LANE

LAYOUT FOR 1, 2 AND 3 DIGIT NUMBERS AND LETTERS

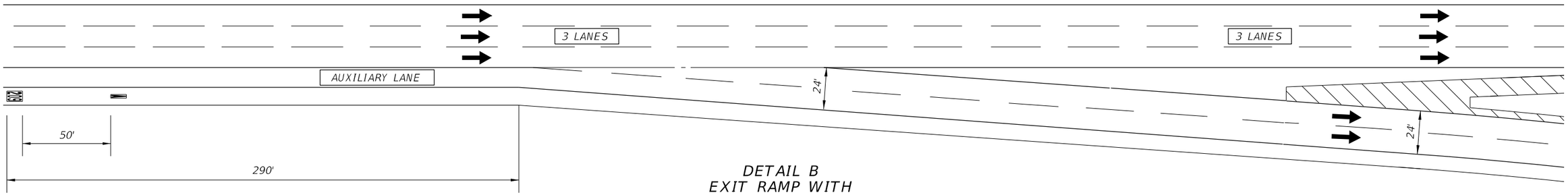

DETAIL B
EXIT RAMP WITH
AUXILIARY LANE

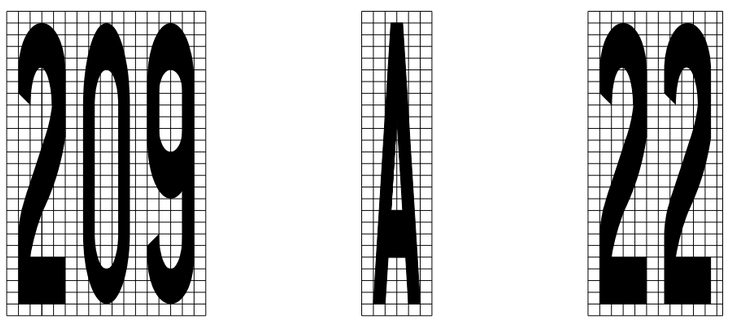

MESSAGE SIZE AND SPACING
4" X 4" squares

NOTES:

1. Messages shall meet requirements of Specification Section 971-6 and Section 711.
2. The thickness of the preformed message shall be 125 mils.
3. The message shall consist of white letters and numbers with black contrasting material. The black material shall meet the mat dimensions shown and have a minimum skid resistance value of 55 BPN.
4. The "EXIT NUMBER" position remains the same distance from the beginning of taper regardless of the number of lines of information.

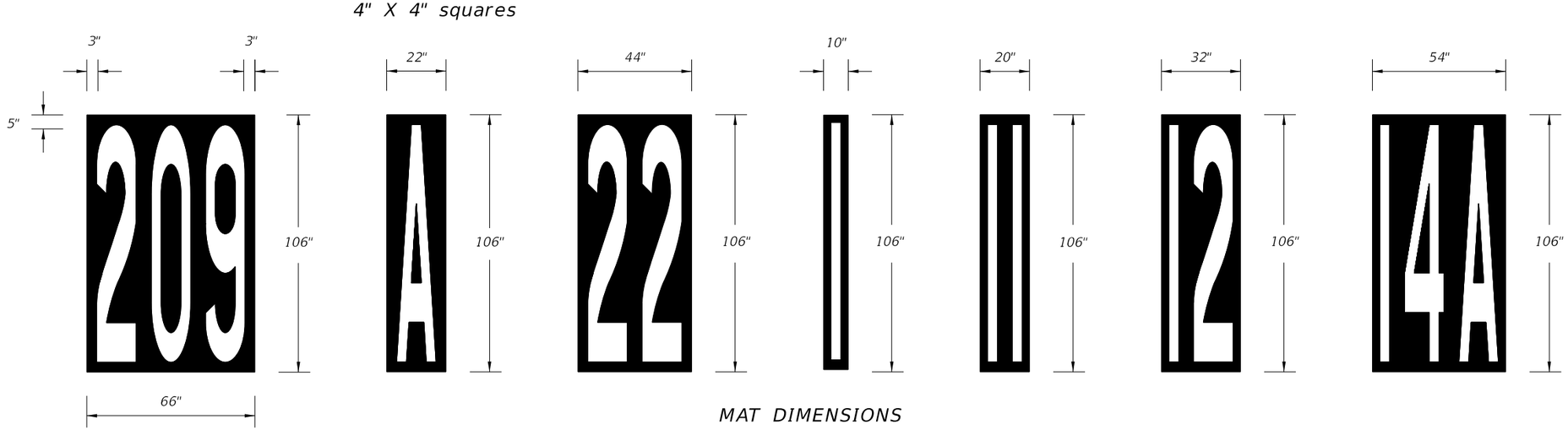

MAT DIMENSIONS

12/3/2015 11:44:48 AM

LAST REVISION	REVISION	DESCRIPTION:			INDEX NO.	SHEET NO.
07/01/10			FDOT FY 2016-17 DESIGN STANDARDS	SPECIAL MARKING AREAS	17346	7 of 14

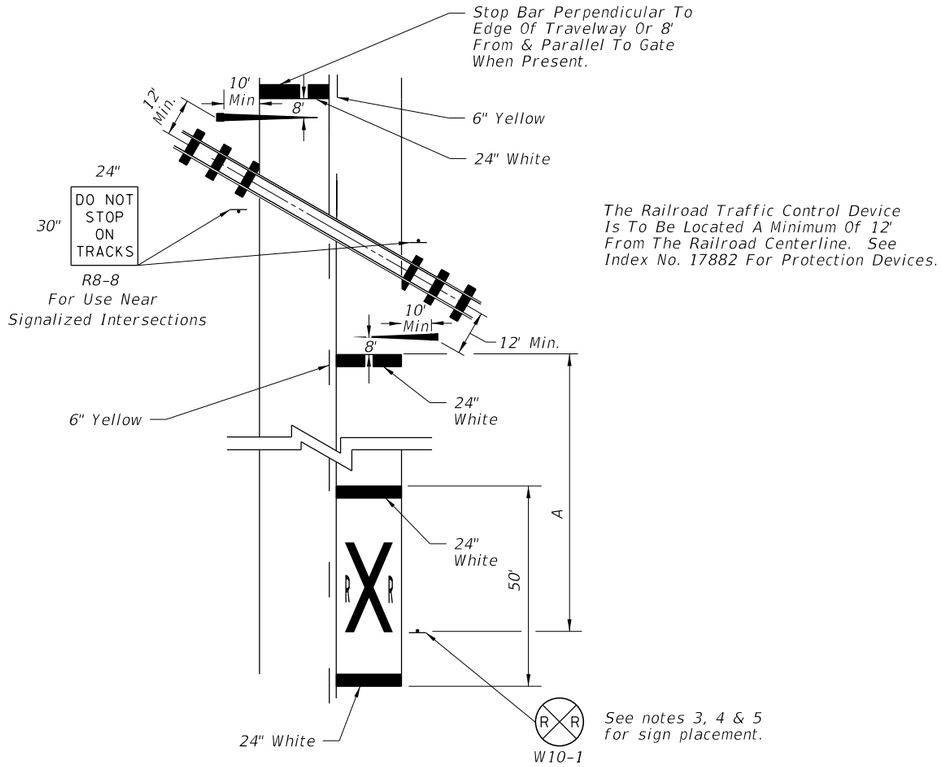

RAILROAD CROSSING AT 2-LANE ROADWAY

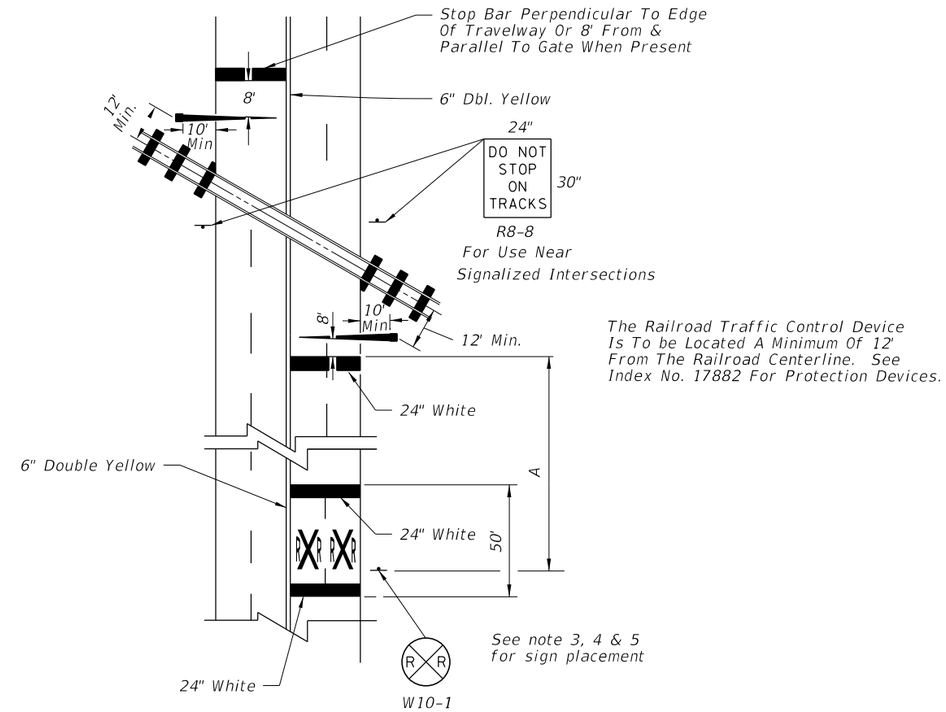

RAILROAD CROSSING AT 4-LANE ROADWAY

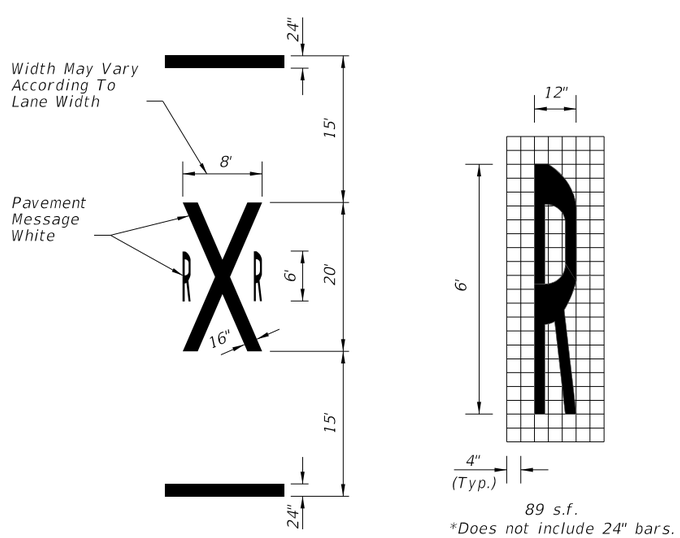

TYPICAL PAVEMENT MARKINGS FOR R/R CROSSING

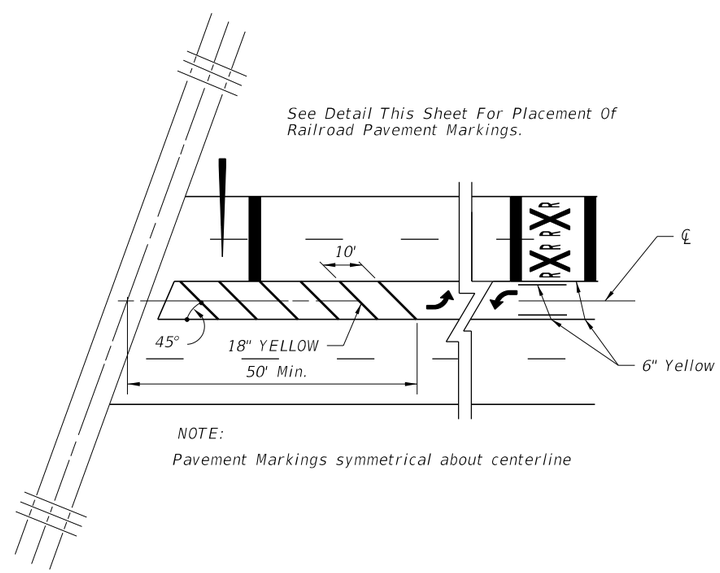

PAVEMENT MARKINGS FOR TERMINATION OF TWO WAY LEFT TURN AT R/R CROSSINGS

NOTES:

1. When computing pavement messages, quantities do not include transverse lines.
2. When dynamic devices are not present or are to be installed, the crossbuck shall be located at the future location of the RR gate or signal and gate in accordance with Index No. 17882.
3. Placement of sign W10-1 in a residential or business district, where low speeds are prevalent. The W10-1 sign may be placed a minimum distance of 100' from the crossing. Where street intersections occur between the RR pavement message and the tracks an additional W10-1 sign & additional Pavement message should be used.
4. Recommended location for FTP-61-06 or FTP-62-06 sign, 100' urban & 300' rural in advance of the crossing.
5. A portion of the pavement marking symbol should be directly opposite the W10-1 sign.

SPEED MPH	" A " IN FT.
60	400
55	325
50	250
45	175
40	125
35	100
URBAN	85 MIN.

12/3/2015 11:44:48 AM

LAST REVISION	REVISION	DESCRIPTION:	FY 2016-17 DESIGN STANDARDS	SPECIAL MARKING AREAS	INDEX NO.	SHEET NO.
10/09/14					17346	8 of 14

GENERAL NOTES

1. For traffic and pedestrian signal installation, refer to Index No. 17721 through 17890.
2. For public sidewalk curb ramps, refer to Index No. 304.
3. For pavement marking and sign installation, refer to Indexes 11200 through 17356.
4. Crosswalk minimum widths: Intersection Crosswalk 6'. Midblock Crosswalk 10'.
5. All crosswalk marking must be white.
6. Longitudinal markings in Special Emphasis Crosswalk must be 24" wide and spaced to avoid the wheel path of vehicles (see detail). Center the longitudinal markings at each lane line. Place additional longitudinal markings at the center of each lane (1/2W). The maximum spacing allowed between longitudinal markings is 60".

   When the Crosswalk is skewed to the lane lines, the longitudinal markings should be parallel to the lane lines.

   24" Longitudinal Bars in Special Emphasis Crosswalk must be preformed thermoplastic.

   12" Transverse lines in the Special Emphasis Crosswalk may be standard thermoplastic or preformed thermoplastic.

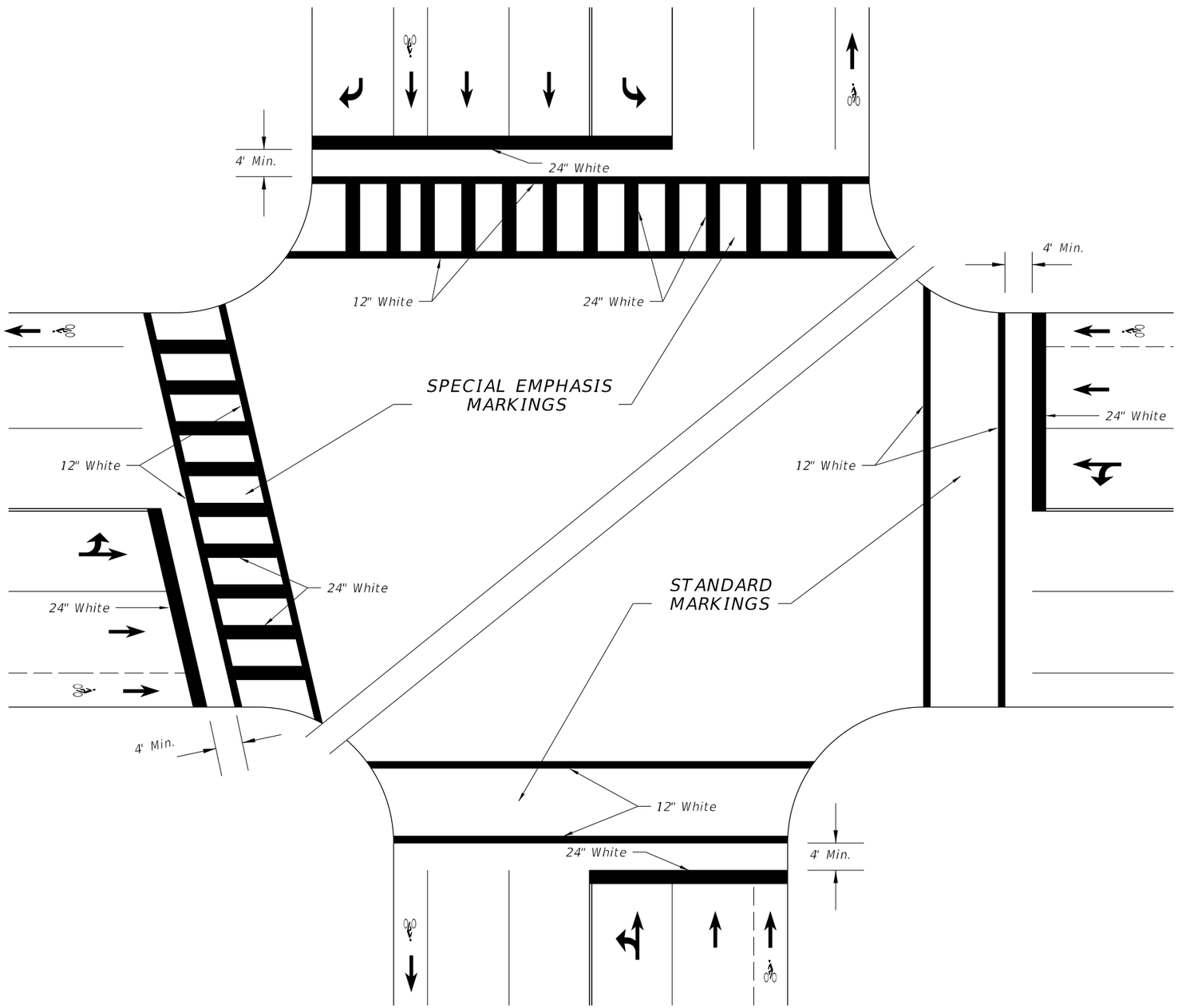

SPECIAL EMPHASIS AND STANDARD CROSSWALKS
SIGNALIZED OR STOP SIGN CONTROLLED INTERSECTION

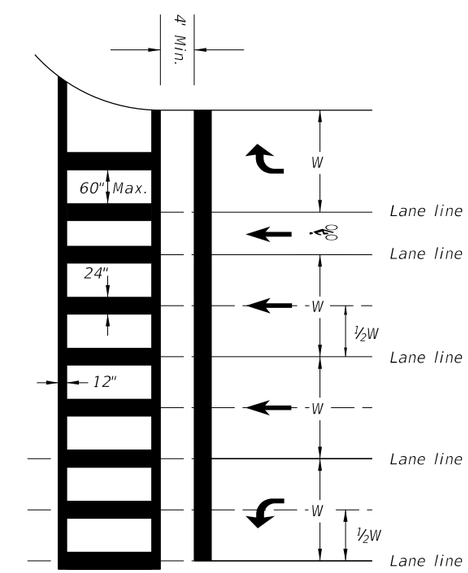

SPECIAL EMPHASIS CROSSWALK MARKING DETAIL

12/3/2015 11:44:49 AM

LAST REVISION	REVISION	DESCRIPTION:			INDEX NO.	SHEET NO.
07/01/15			FDOT FY 2016-17 DESIGN STANDARDS	SPECIAL MARKING AREAS	17346	9 of 14

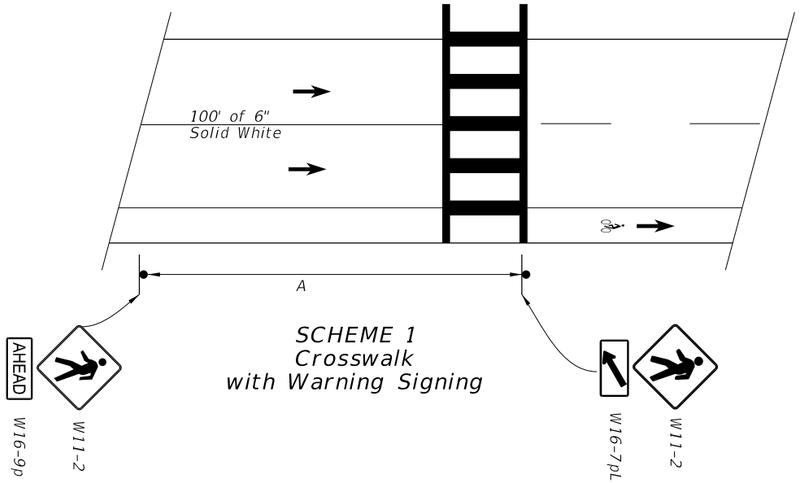

SCHEME 1
Crosswalk
with Warning Signing

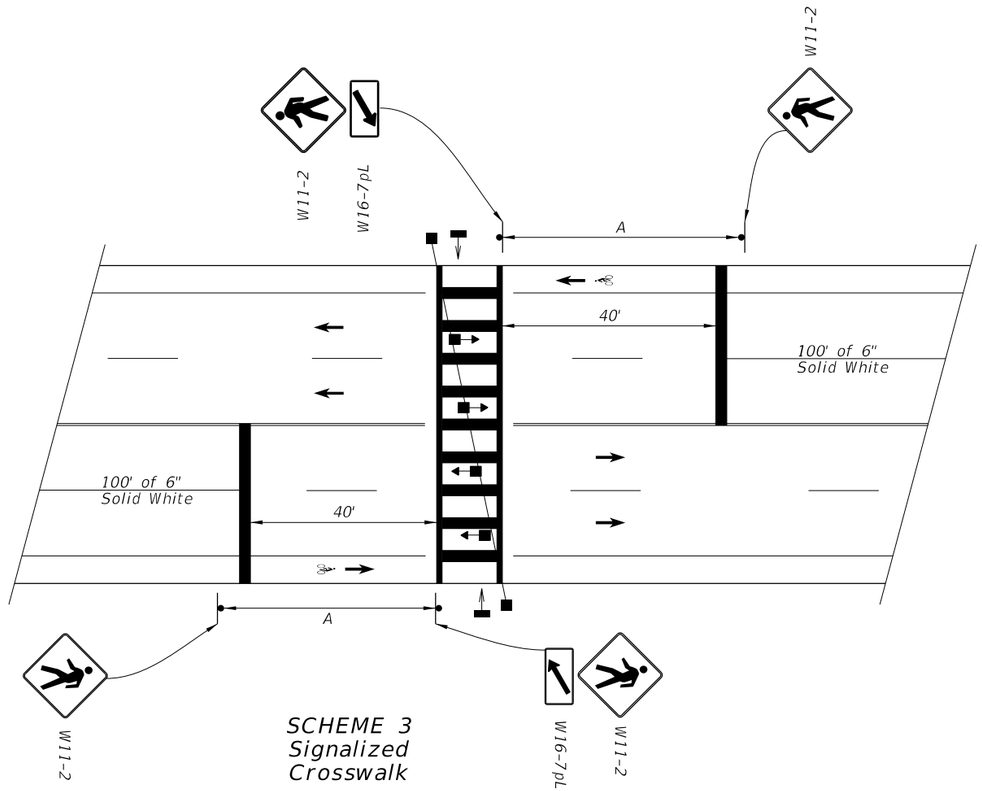

SCHEME 3
Signalized
Crosswalk

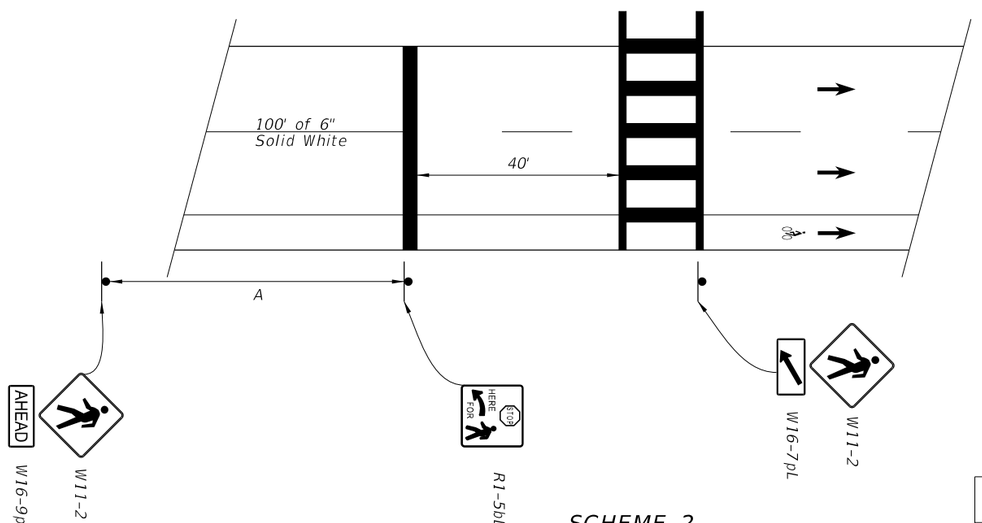

SCHEME 2
Crosswalk
with Stop Signing

APPROACH SPEED MPH	A-SUGGESTED DISTANCE (Ft.)
25 Or Less	200
26 To 35	250
36 To 45	300

1. Plans shall indicate which crosswalk scheme is to be used.
2. The details shown do not depict the signing and markings for multi-lane roadways with divided medians. For these applications, additional signs shall be installed on the median side. Minimum width of Mid-Block Crosswalks is 10'.
3. All mid-block crosswalks shall use special emphasis crosswalk markings.
4. Crosswalk marking shall be preformed marking materials.

12/3/2015 11:44:50 AM

LAST REVISION	REVISION	DESCRIPTION:			INDEX NO.	SHEET NO.
07/01/14			FDOT FY 2016-17 DESIGN STANDARDS	SPECIAL MARKING AREAS	17346	10 of 14

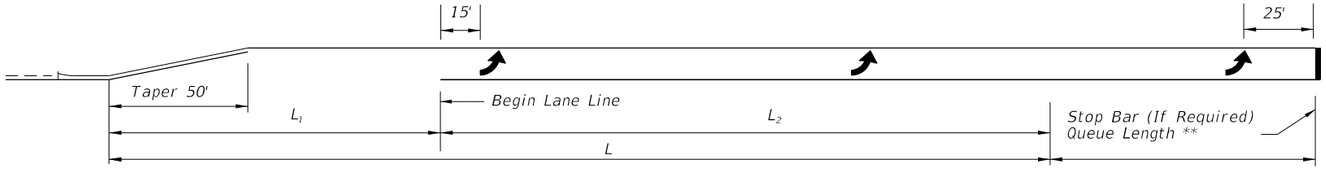

SINGLE LEFT TURNS

** Queue Length Is Measured From The Median Nose Radial Point Or, When A Stop Bar Is Required, From The Stop Bar.

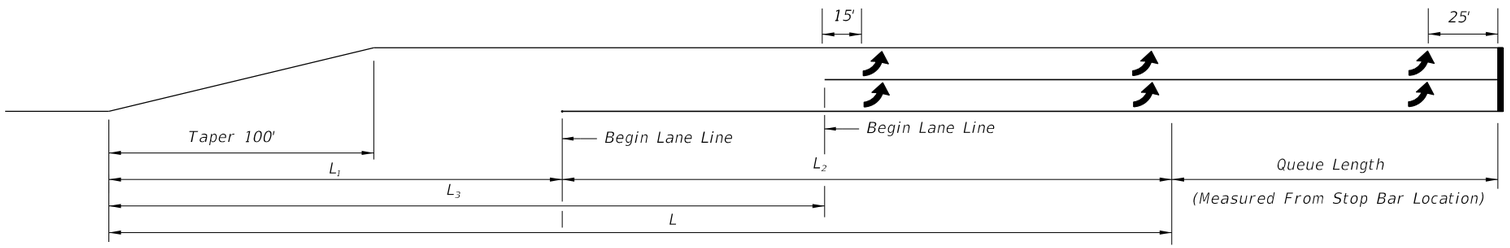

DOUBLE LEFT TURNS

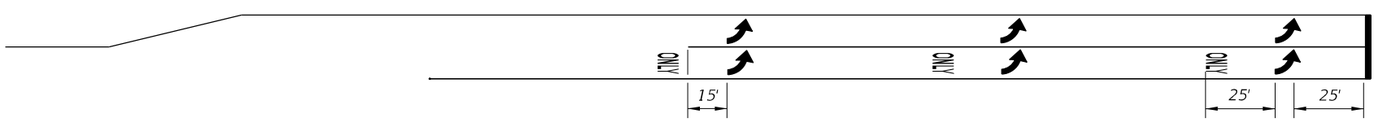

The ONLY pavement message is required for turn lanes, where the thru lane becomes turn lane.

Through Lane Becomes Exclusive Left Turn

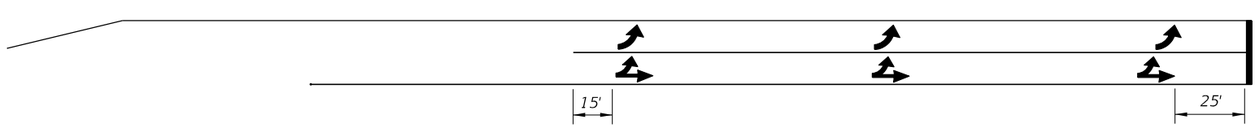

Through Lane Becomes Optional Left Turn

DOUBLE LEFT TURN MARKINGS

	TURN LANES ◦ CURBED AND UNCURBED MEDIANS						
		URBAN CONDITIONS			RURAL CONDITIONS		
Design Speed (mph)	Clearance Distance L_1	Brake To Stop Distance L_2	Total Decel. Distance L	Clearance Distance L_3	Brake To Stop Distance L_2	Total Decel. Distance L	Clearance Distance L_3
35	70'	75'	145'	110'	— —	— —	— —
40	80'	75'	155'	120'	— —	— —	— —
45	85'	100'	185'	135'	— —	— —	— —
50	105'	135'	240'	160'	185'	290'	160'
55	125'	— —	— —	— —	225'	350'	195'
60	145'	— —	— —	— —	260'	405'	230'
65	170'	— —	— —	— —	290'	460'	270'

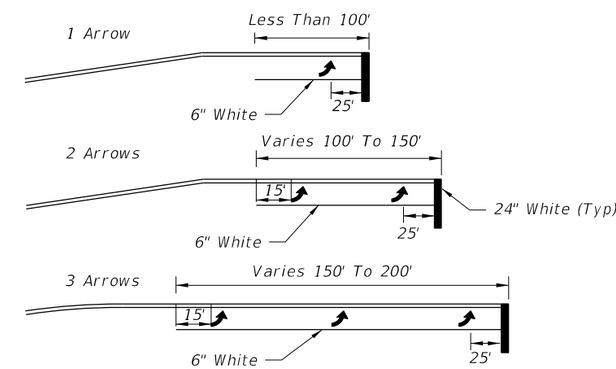

Arrow should be evenly spaced between first and last arrow. Turn lanes longer than 200' add one arrow for each 100' additional length.

ARROW SPACING

NOTES:

1. The "Begin Lane Line" locations are based on the standard lengths shown in Design Standard 301. These locations must be adjusted on a case by case basis for turn lanes not meeting the standard lengths.
2. Yellow left turn edge marking may be used adjacent to raised curb or grass medians if lane use is not readily apparent to drivers approaching a left turn storage lane.
3. Refer to Design Standard Index 301 for Roadway Details.
4. This Index also applies to right turn lanes.

12/3/2015 11:44:50 AM

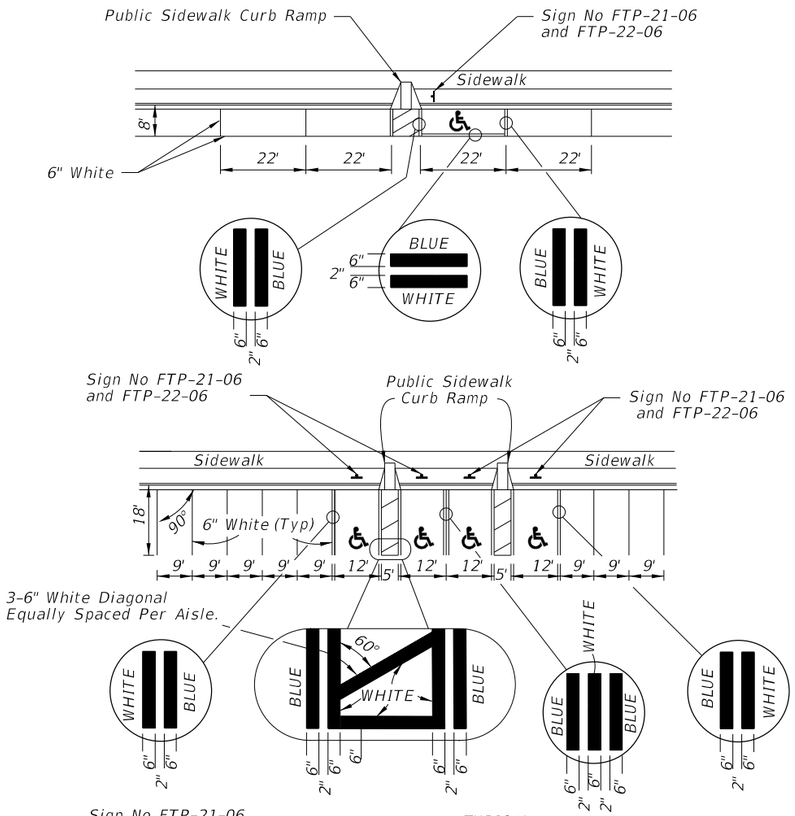

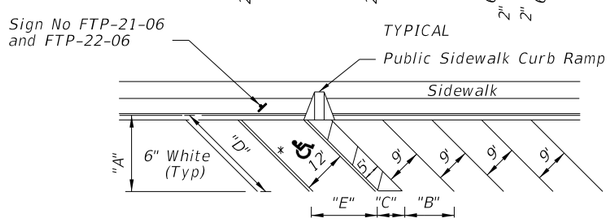

* FOR ACCESSIBLE MARKINGS - SEE ABOVE

	"DIMENSIONS"				
∠ θ	"A"	"B"	"C"	"D"	"E"
45°	19'-1"	12'-9"	7'-0"	27'-0"	17'-0"
60°	20'-1"	10'-5"	5'-9"	23'-2"	13'-10"

NOTES:

1. Dimensions are to the centerline of markings.
2. An Access Aisle is required for each accessible space when angle parking is used.
3. Criteria for pavement markings only, not public sidewalk curb ramp locations. For ramp locations refer to plans.
4. Blue pavement markings shall be tinted to match shade 15180 of Federal Standards 595a.
5. The FTP-22-06 panal shall be mounted below the FTP-21-06 sign.

PAVEMENT MARKING FOR PUBLIC SIDEWALK CURB RAMPS IN REST AREAS

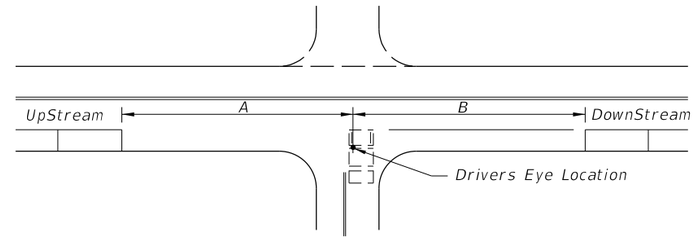

SPEED MPH	UP STREAM (A)	DOWN STREAM (B)	
		2 LANE	4 LANE
0-30	85'	60'	45'
35	100'	70'	50'

NOTES

1. Distances measured longitudinally along the street from driver location of entering vehicle to end of parking restriction.
2. Distances applicable to intersecting street, major driveways and other driveways to the extent practical.
3. For nonsignalized intersections, the values above shall be compared with the values for signalized intersections and the maximum restrictions implemented. These restrictions apply to both accessible and nonaccessible parking.

MINIMUM PARKING RESTRICTION FOR NONSIGNALIZED INTERSECTIONS

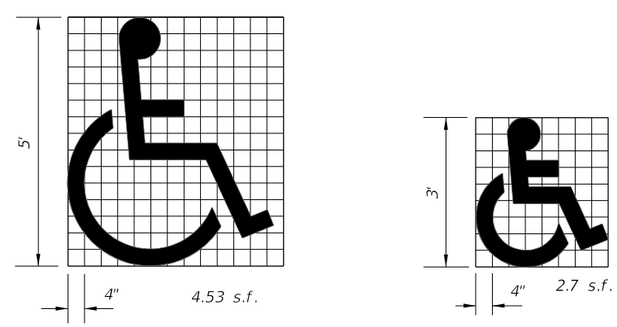

Use of pavement symbol in accessible parking spaces is optional, when used the symbol shall be 3' or 5' high and white in color.

UNIVERSAL SYMBOL OF ACCESSIBILITY

GENERAL NOTES (Signalized & Nonsignalized)

1. For entrances to a one-way street, the downstream restriction may be reduced to 20'.
2. Parking shall not be allowed within 20' of a crosswalk.
3. All parking lane markings shall be 6" white.
4. Parking lane lines shall be broken at driveways.
5. Refer to Chapter 316, Fla. Statutes, for laws governing parking spaces.
6. Where curb and gutter is used, the gutter pan width may be included as part of the minimum width of parking lane, but desirably the lane width should be in addition to that of the gutter pan.

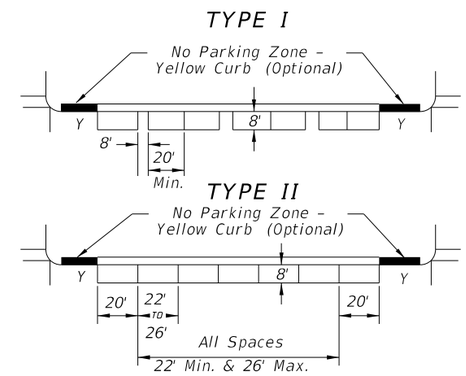

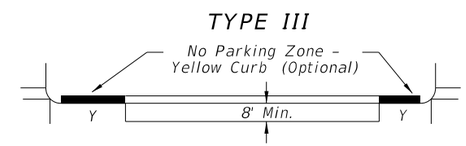

SPEED LIMIT MPH	SIGNALIZED INTERSECTIONS
0-30	30'
35	50'

DISTANCE FROM CURB RADIUS (Y)

PARKING RESTRICTION (FT.) FOR SIGNALIZED INTERSECTION

NOTES:

1. Parking restrictions measured from curb radius point.
2. Restrictions for accessible parking are the same as those applied to nonsignalized intersections.

MINIMUM PARKING RESTRICTION FOR SIGNALIZED INTERSECTION

12/3/2015 11:44:51 AM

LAST REVISION	REVISION	DESCRIPTION:			INDEX NO.	SHEET NO.
07/01/15			FDOT FY 2016-17 DESIGN STANDARDS	SPECIAL MARKING AREAS	17346	12 of 14

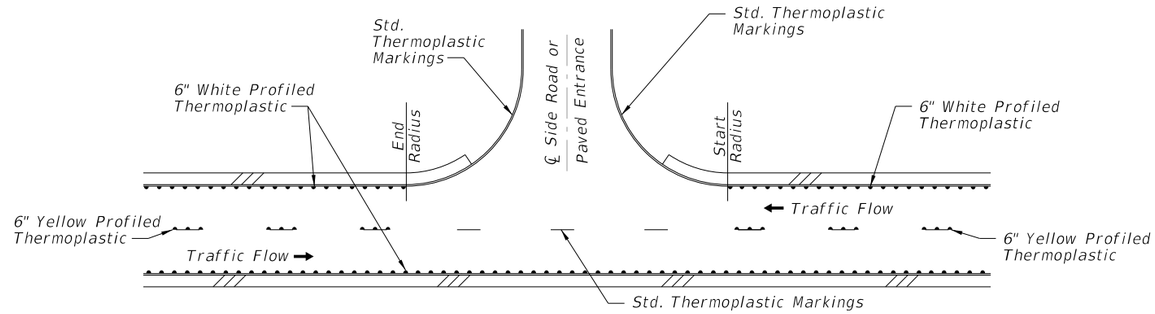

TYPICAL RURAL INTERSECTION WITHOUT TURN LANES

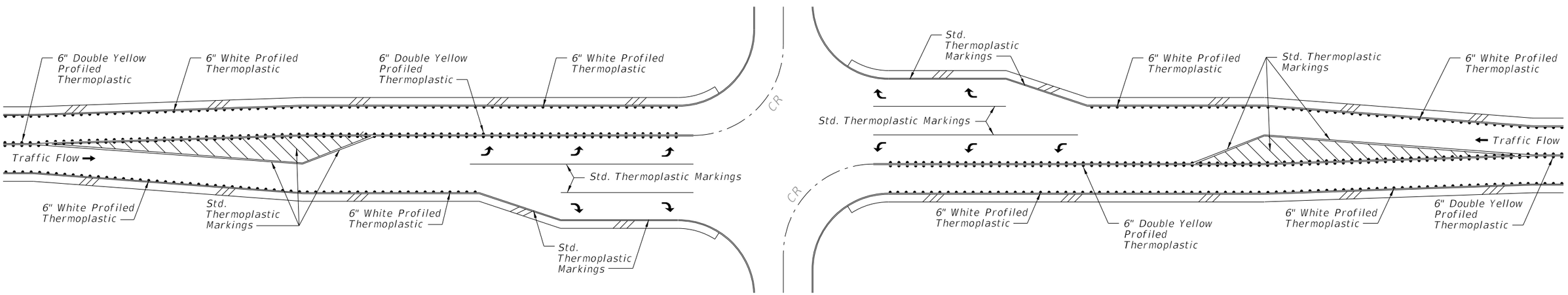

TYPICAL RURAL INTERSECTION WITH TURN LANES

GENERAL NOTES:

1. Remove raised retroreflective pavement markers when in conflict with the installation of the centerline profiled thermoplastic pavement markings. The cost of removal is included in the cost of the profiled thermoplastic pavement marking.

2. Replacement of retroreflective pavement markers removed during the installation of the centerline profiled thermoplastic pavement markings will be paid for under Pay Item 706.

PROFILED THERMOPLASTIC MARKINGS 2 LANE ROADWAYS

LAST REVISION	REVISION	DESCRIPTION:			INDEX NO.	SHEET NO.
01/01/16			FDOT FY 2016-17 DESIGN STANDARDS	SPECIAL MARKING AREAS	17346	13 of 14

12/3/2015 11:44:52 AM

REFERENCE:

See Profiled Thermoplastic Markings General Notes on Sheet 13.

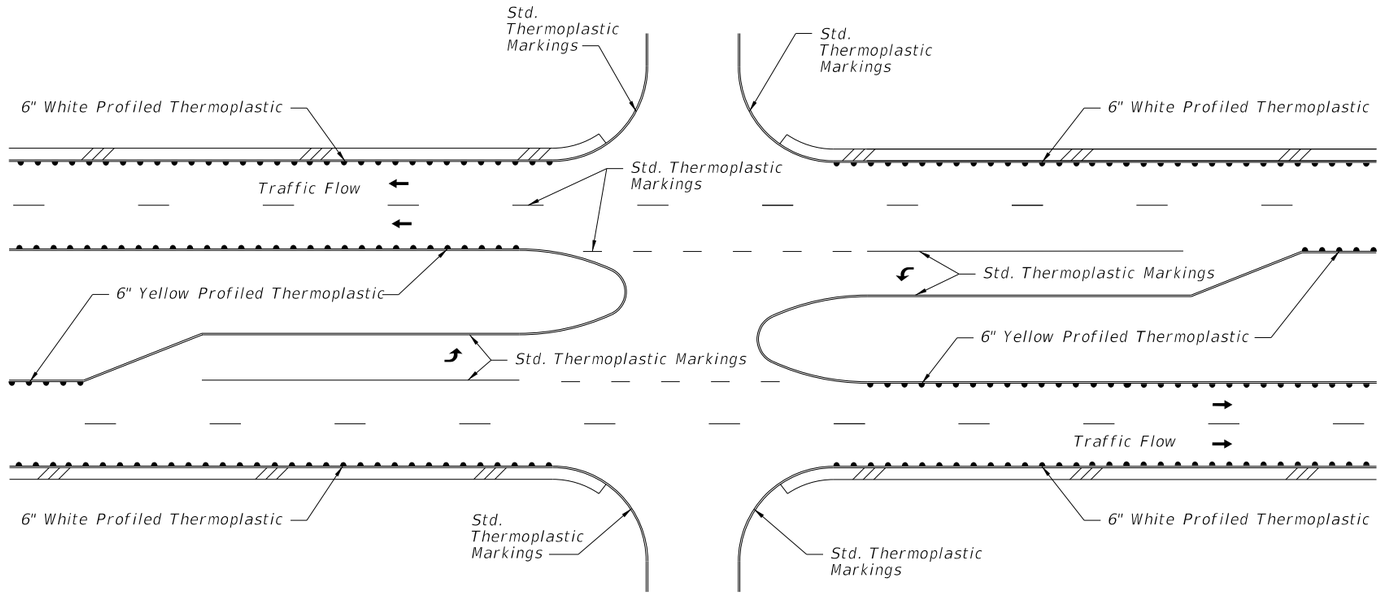

TYPICAL RURAL INTERSECTION

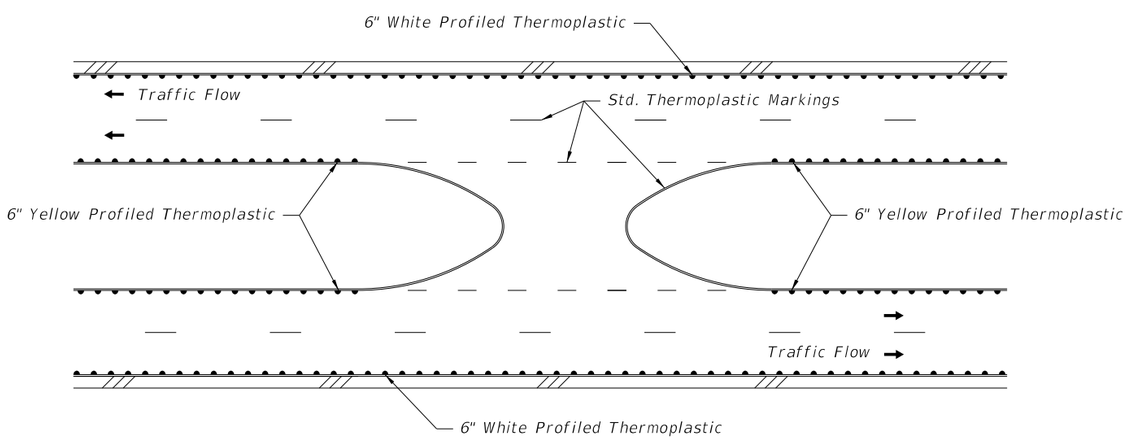

TYPICAL RURAL MEDIAN OPENING

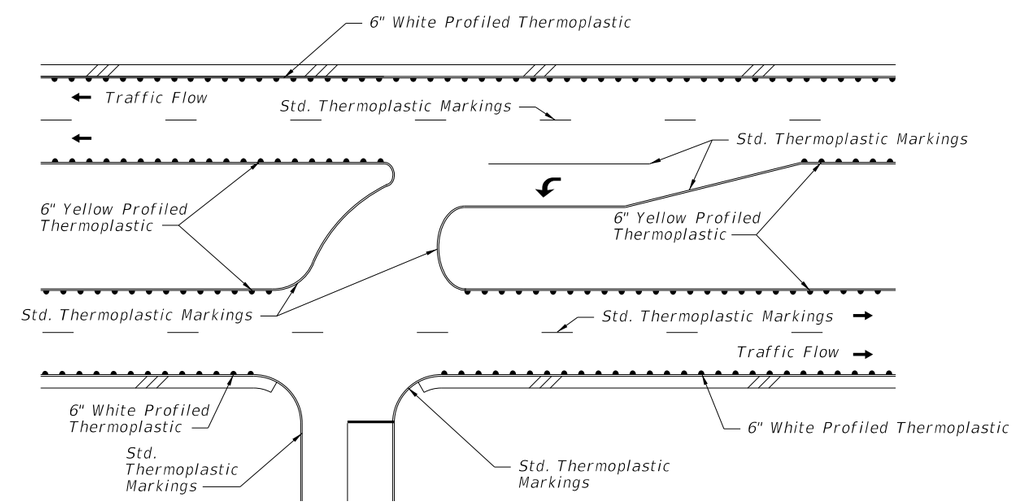

TYPICAL RURAL DIRECTIONAL INTERSECTION

PROFILED THERMOPLASTIC MARKINGS MULTI-LANE ROADWAYS

LAST REVISION	REVISION	DESCRIPTION:			INDEX NO.	SHEET NO.
01/01/16			FY 2016-17 DESIGN STANDARDS	SPECIAL MARKING AREAS	17346	14 of 14

12/3/2015 11:44:52 AM

8.1 S.F.

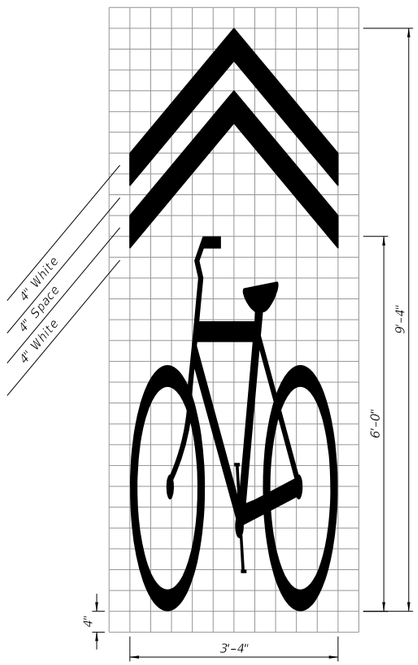

Shared Lane Marking (SLM)

6.3 S.F.

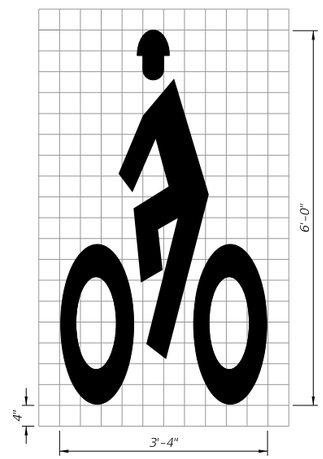

Helmeted Bicyclist Symbol

4.2 S.F.

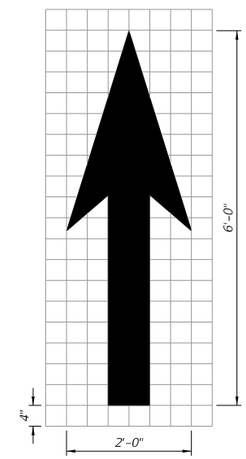

Bike Lane Arrow

9.0 S.F.

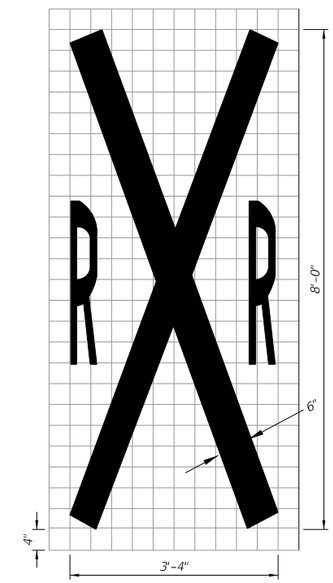

Railroad Crossing
(For Shared Use Path Only)

NOTES:

1. All bicycle markings and pavement messages shall be White.

2. All bicycle markings shall be preformed thermoplastic.

3. Recommended placement of bicycle lane markings:

   a) At the beginning of a bicycle lane, on the far side of major intersections, and prior to and within the bicycle lane keyhole.

   b) Along the roadway as needed to provide a maximum spacing of 1,320 feet for posted speeds less than or equal to45 mph, 2,640 feet for a posted speed of 50 mph or greater.

4. Recommended spacing for shared lane marking (SLM): Immediately after intersections and at a maximum spacing of 500 feet.

STANDARD PAVEMENT MARKING
MESSAGE LAYOUTS

12/3/2015 11:44:53 AM

LAST REVISION	REVISION	DESCRIPTION:	FDOT FY 2016-17 DESIGN STANDARDS	BICYCLE MARKINGS	INDEX NO.	SHEET NO.
07/01/15					17347	1 of 5

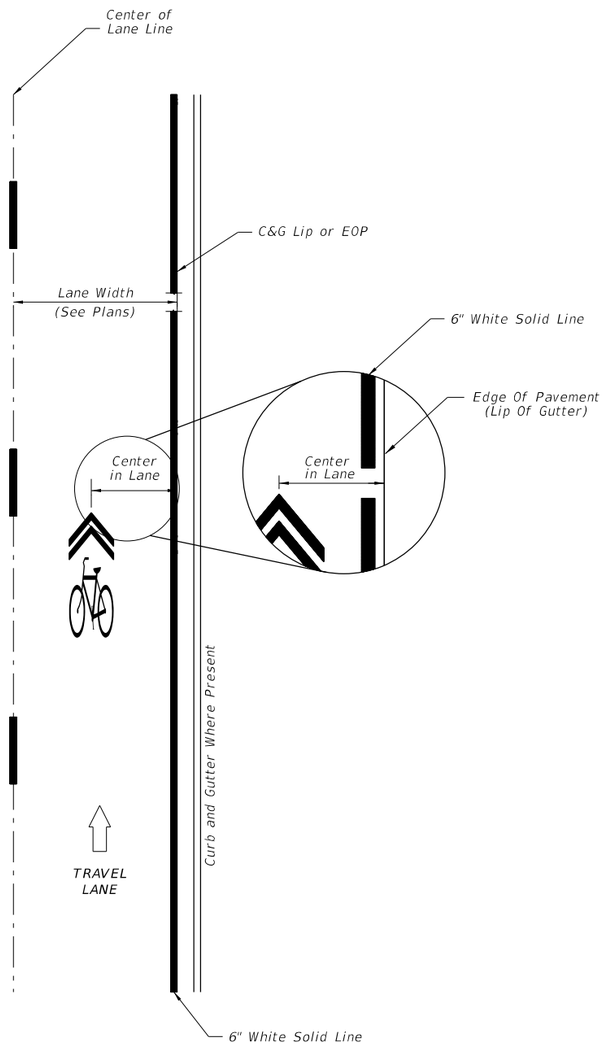

SCENARIO #1
LANE WIDTH ≤ 14'

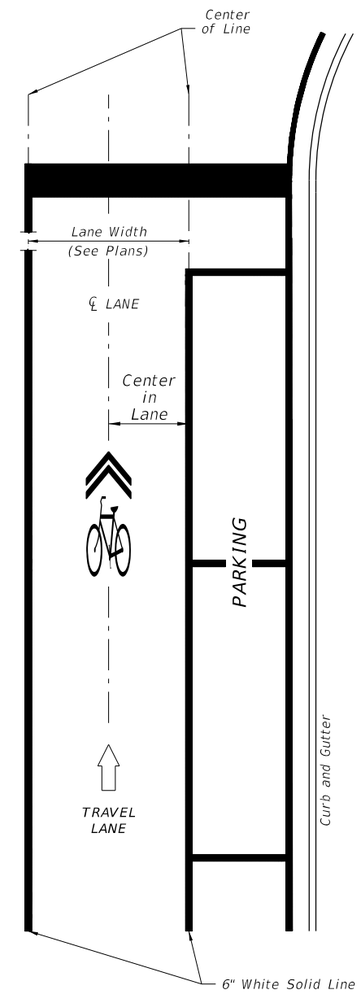

SCENARIO #2
ADJACENT TO PARKING

SHARED LANE MARKINGS

LAST REVISION	REVISION	DESCRIPTION:			INDEX NO.	SHEET NO.
11/18/14			FY 2016-17 DESIGN STANDARDS	BICYCLE MARKINGS	17347	2 of 5

12/3/2015 11:44:54 AM

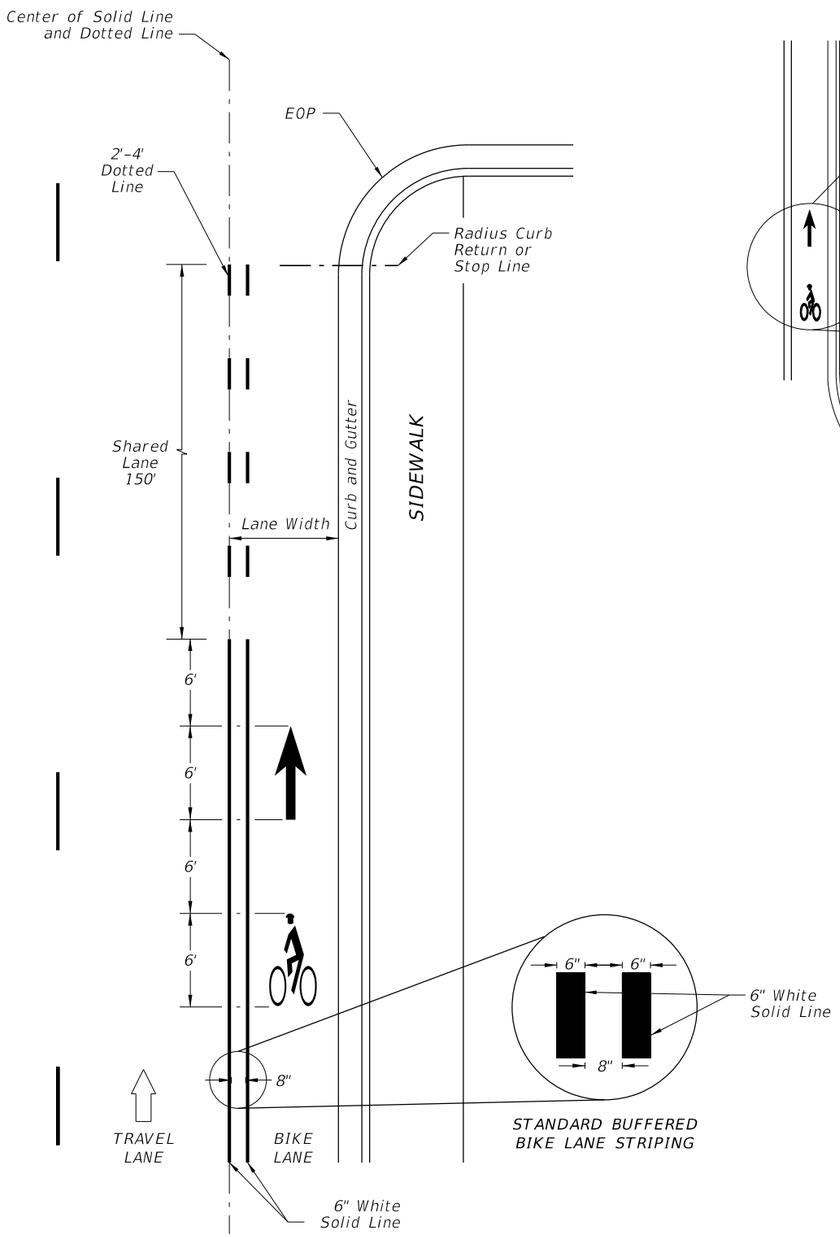

APPROACH TO INTERSECTIONS DETAILS

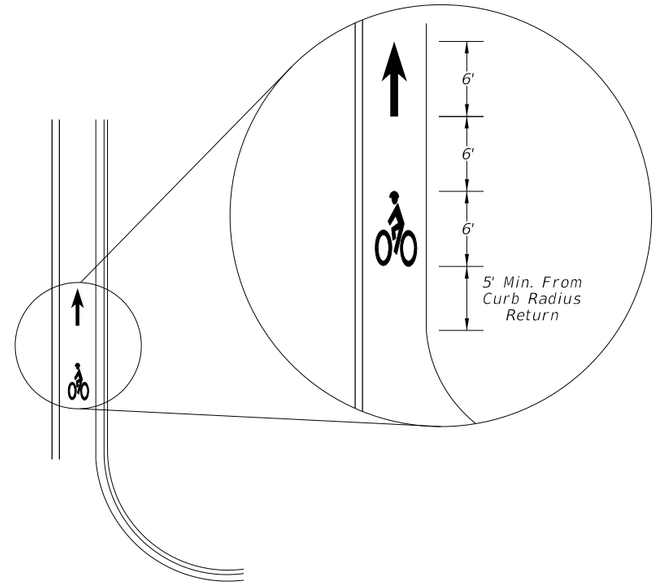

FAR SIDE OF INTERSECTION DETAIL

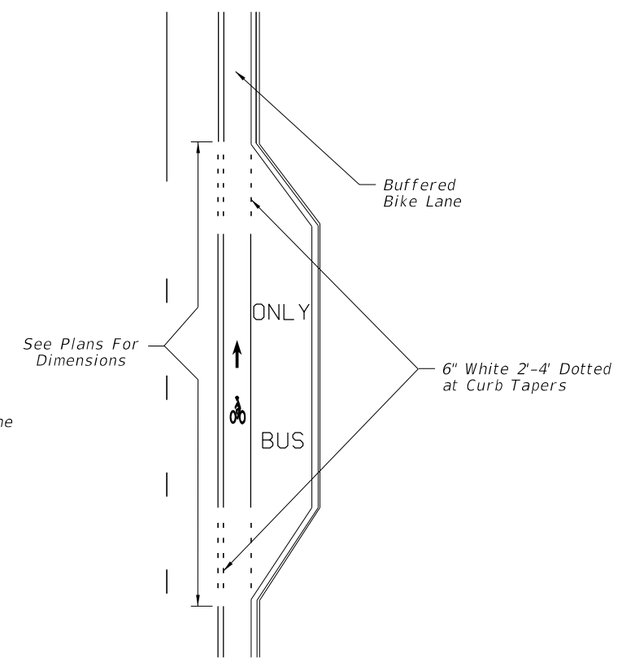

BUS BAY DETAIL
CURB AND GUTTER TYPICAL SECTION

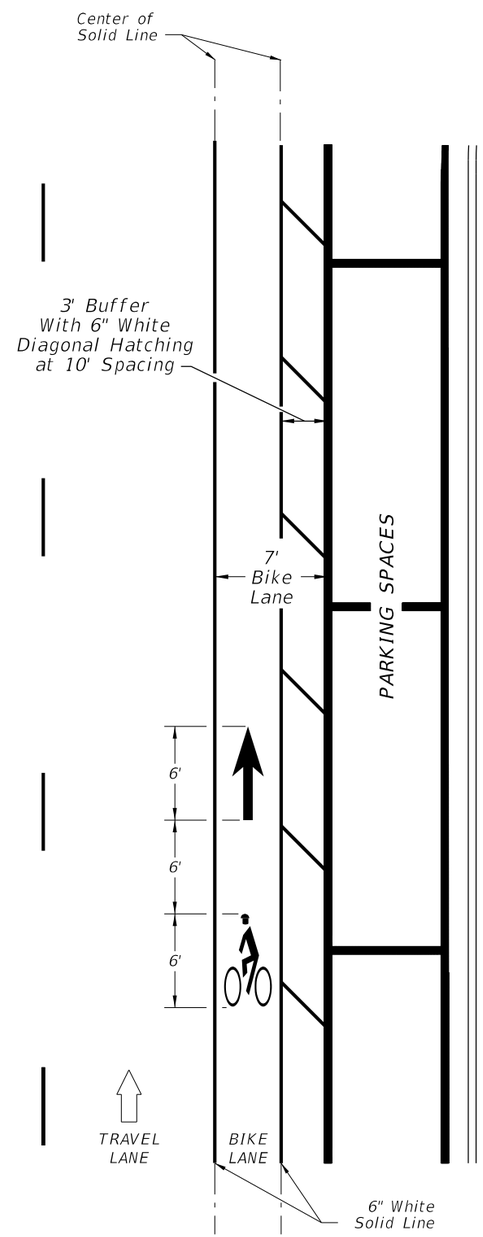

ADJACENT TO PARKING

BUFFERED BIKE LANES

12/3/2015 11:44:58 AM

LAST REVISION	REVISION	DESCRIPTION:			INDEX NO.	SHEET NO.
11/18/14			FDOT FY 2016-17 DESIGN STANDARDS	BICYCLE MARKINGS	17347	3 of 5

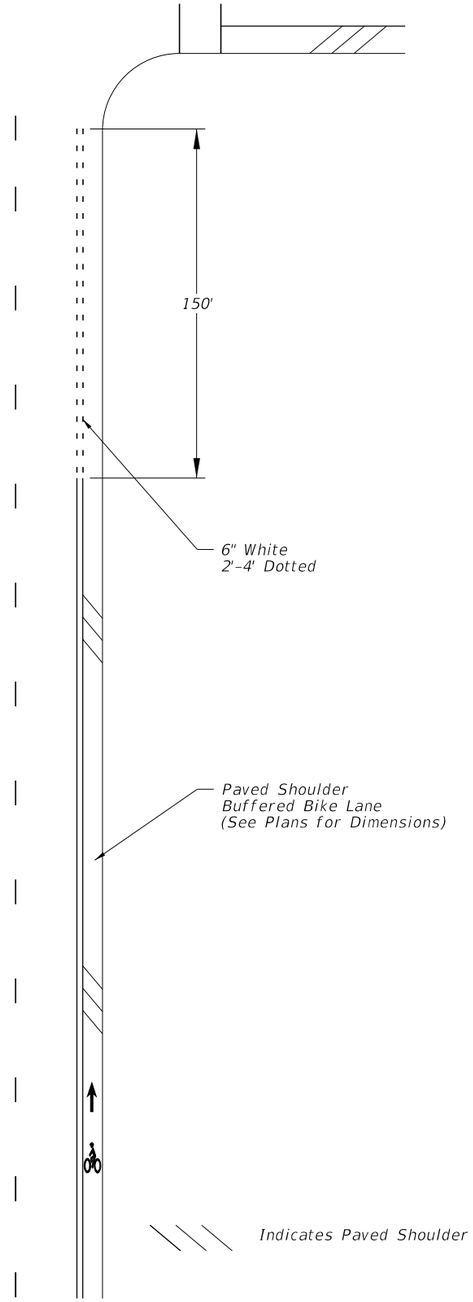

INTERSECTION WITH NO RIGHT TURN LANE,
FLUSH SHOULDER WITH BUFFERED
BIKE LANE TYPICAL SECTION

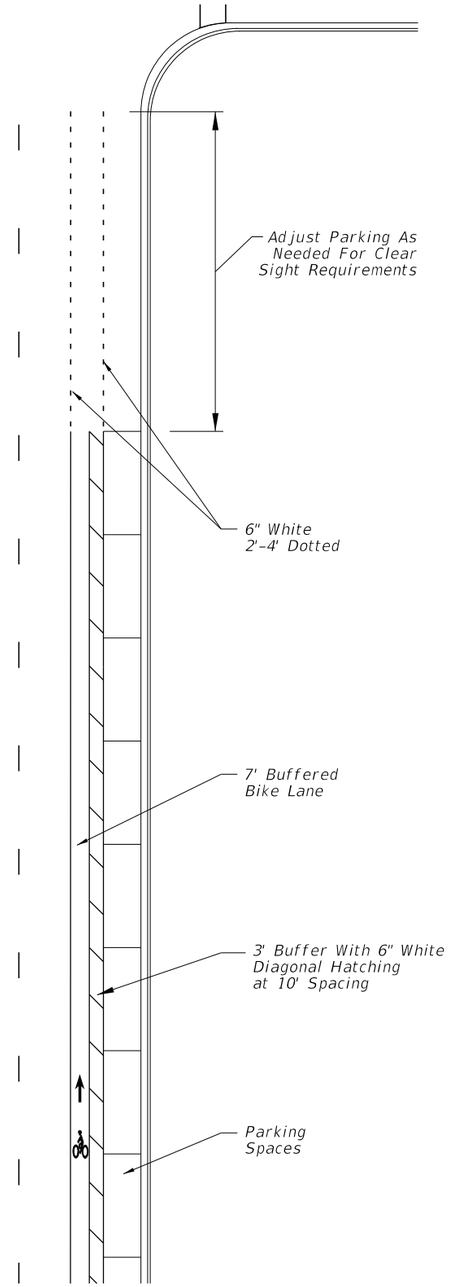

BIKE LANE ADJACENT TO ON STREET PARKING
NO RIGHT TURN LANE,
CURB AND GUTTER TYPICAL SECTION

BIKE LANE MARKINGS

12/3/2015 11:44:59 AM

LAST REVISION	REVISION	DESCRIPTION:	FY 2016-17 DESIGN STANDARDS	BICYCLE MARKINGS	INDEX NO.	SHEET NO.
11/18/14					17347	4 of 5

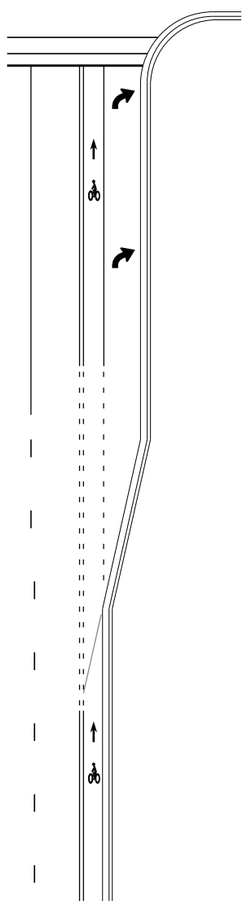

KH-1
INTERSECTION WITH
SEPARATE RIGHT TURN LANE,
CURB AND GUTTER TYPICAL SECTION

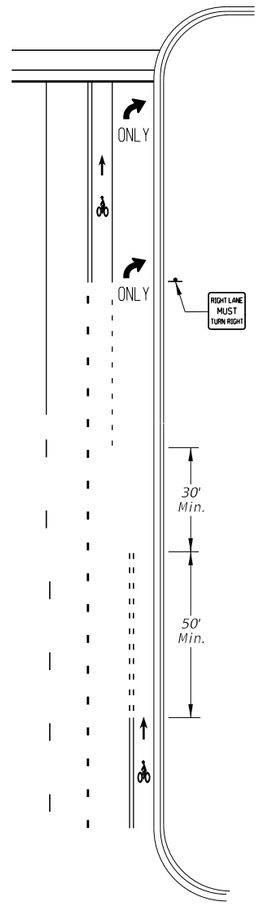

KH-2
INTERSECTION WITH
RIGHT TURN DROP LANE,
CURB AND GUTTER TYPICAL SECTION

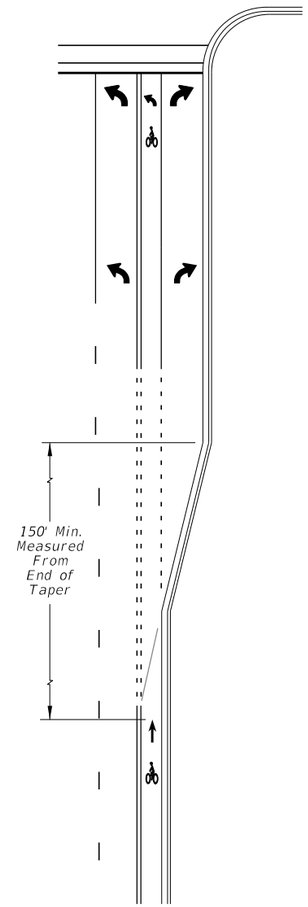

KH-3
"TEE" INTERSECTION WITH
SEPARATE RIGHT TURN LANE,
CURB & GUTTER TYPICAL SECTION

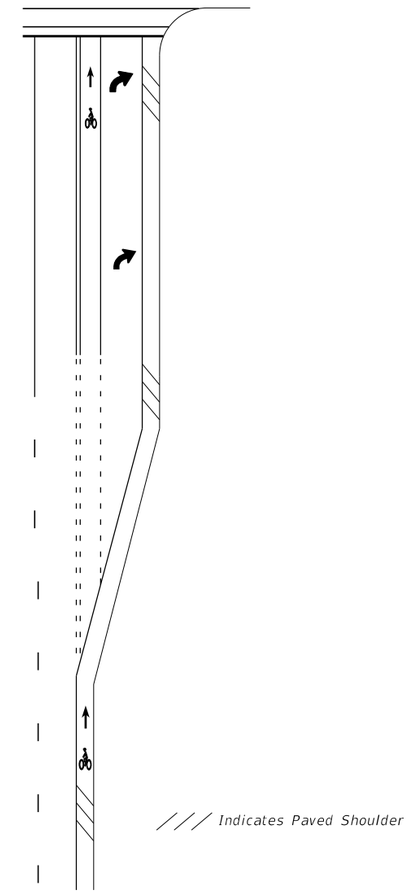

KH-4
INTERSECTION WITH
SEPARATE RIGHT TURN LANE,
IN OR WITHIN ONE MILE OF AN URBAN AREA
FLUSH SHOULDER TYPICAL SECTION

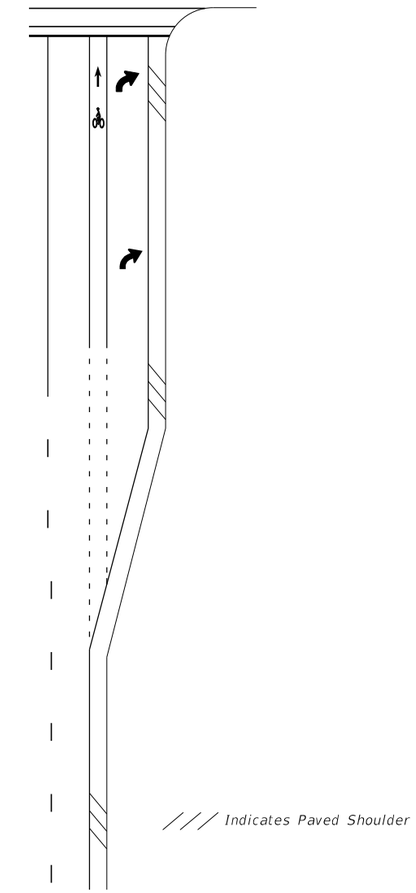

KH-5
INTERSECTION WITH
SEPARATE RIGHT TURN LANE, IN RURAL AREA
FLUSH SHOULDER TYPICAL SECTION

KEYHOLE MARKINGS

12/3/2015 11:44:59 AM

LAST REVISION	REVISION	DESCRIPTION:	FY 2016-17 DESIGN STANDARDS	BICYCLE MARKINGS	INDEX NO.	SHEET NO.
07/01/15					17347	5 of 5

CASE I Type 1 Object Markers shall consist of nine yellow reflectors mounted on a yellow reflective background or consist of a retroreflective panel of the same size.

CASE II End of Road Markers shall consist of nine red reflectors mounted on a red reflective background or consist of a retroreflective panel of the same size.

NOTES:

1. This index applicable to residential and minor streets only. Major streets to be evaluated on a case by case basis.
2. "T"-intersection-Two-Way arrows and reflectors are optional. The need should be based on a review of each location.
3. For additional details on aluminum round post, sign panel material and bolts, nuts and washers see Index Nos. 11860.
4. Case I Installation - The arrow panels and object markers shall be located approximately 20', but not less than 12' from the edge of the travel lane.
5. Dead end sign shall be posted a sufficient advance distance to permit the vehicle operator to avoid the dead end by turning off, if possible, at the nearest intersecting street.
6. For pavement marking see Index No. 17346
7. No guardrail is required unless special field conditions require its use.

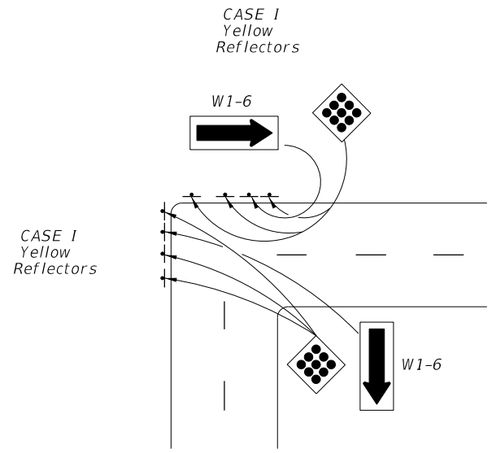

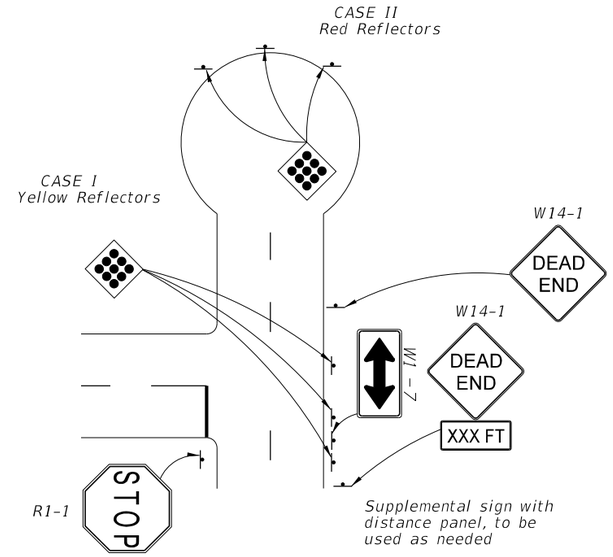

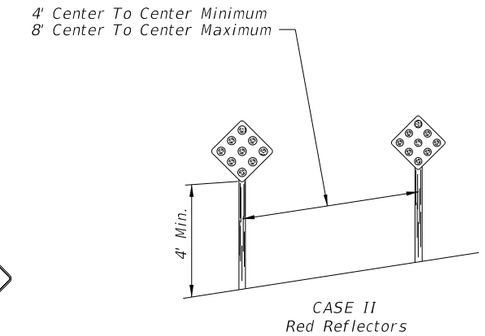

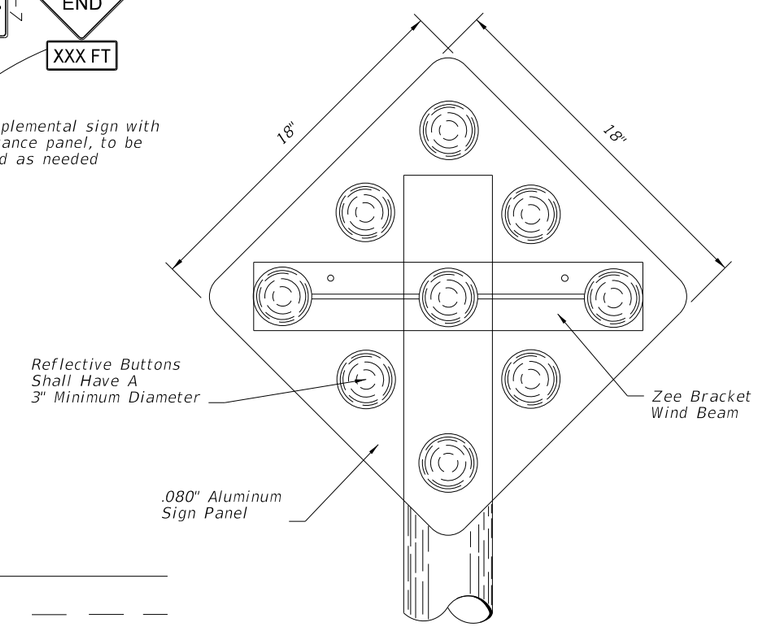

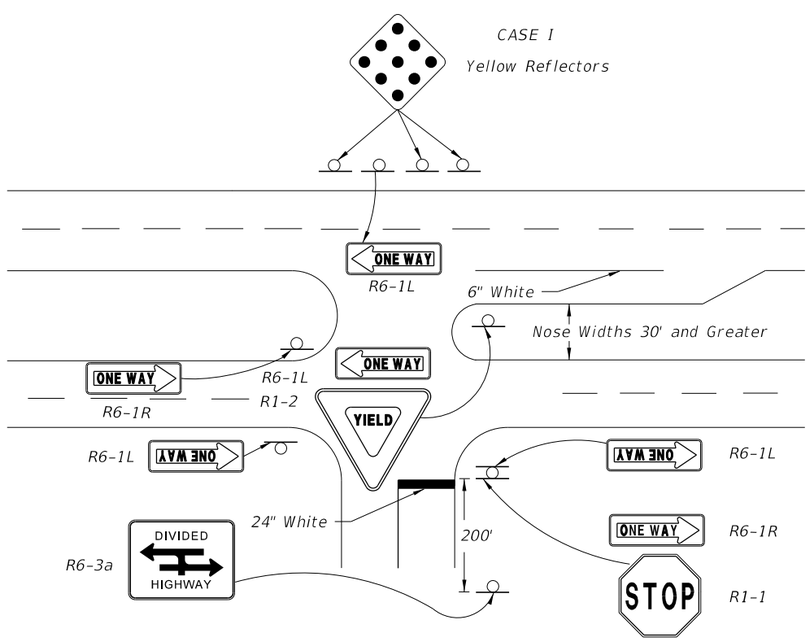

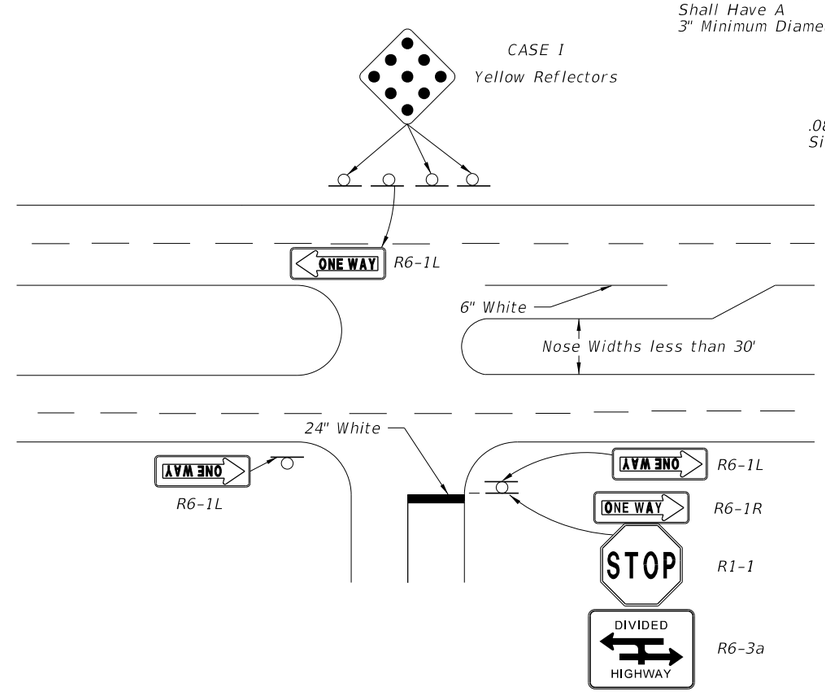

Object markers shall be installed on 2" Ø x 1/8" Aluminum Round Post.
3/8" Ø Aluminum Button Head Bolt with Nut and Lockwasher or 15/16" Ø Stainless Steel Hex Head Bolt with Flat Washer under Head and Lockwasher under Nut. Post foundation shall be installed in accordance with Index No. 11860.

12/3/2015 11:45:01 AM

LAST REVISION	REVISION	DESCRIPTION:			INDEX NO.	SHEET NO.
07/01/13			FDOT FY 2016-17 DESIGN STANDARDS	TRAFFIC CONTROLS FOR STREET TERMINATIONS	17349	1 of 1

** Note:

Two assemblies are required; one for each side of the ramp, showing those services in each particular direction from the ramp terminal.

Ramp mounted signs shall be installed to avoid conflict with existing signs and in no case should they be placed within 100' of another sign.

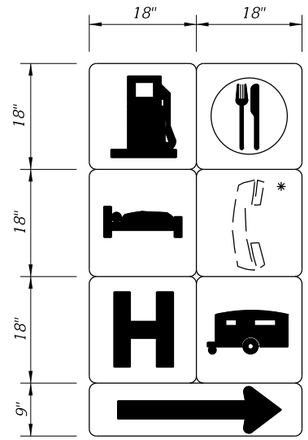

DETAIL "D"

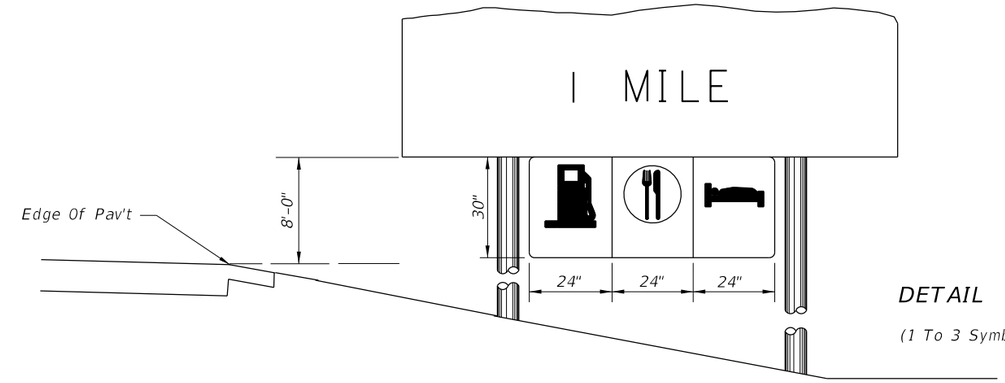

DETAIL "A"

(1 To 3 Symbols)

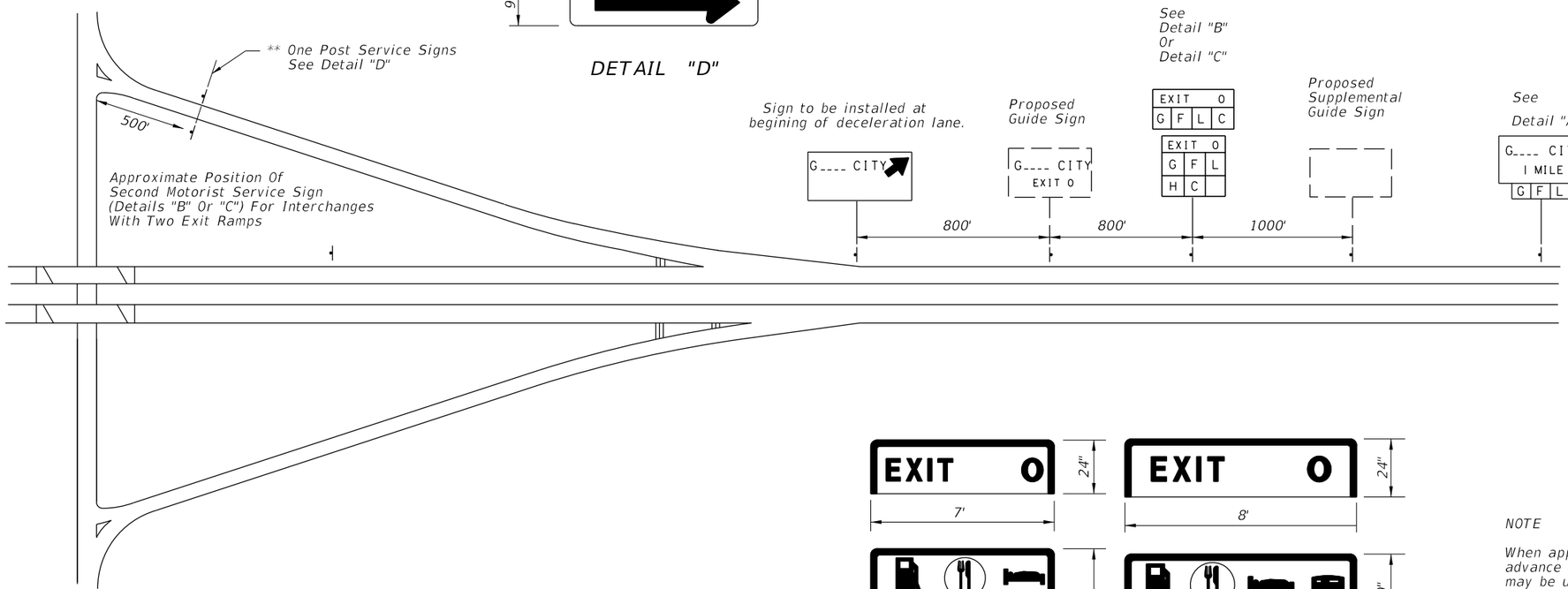

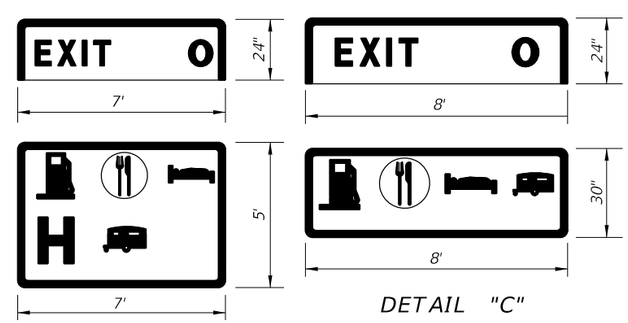

DETAIL "B"

(4 To 6 Symbols)

DETAIL "C"

(4 Symbols)

NOTE

When approved for attachment to the advance guide signs, up to 3 services may be used for an exit. The symbol signs shall be suspended from the guide sign panel or existing wind beams. Symbol signs are not to be connected to existing sign posts.

The mounting height of the advance guide sign shall be increased, where necessary, to provide 8' between the level of the pavement edge and the bottom of the guide sign, prior to mounting the supplementary panel.

GENERAL NOTES

1. Only those services meeting criteria established by the Department and approved by the State Traffic Operations Engineer for each interchange shall be shown. Symbol signs for motorist services shall always appear in the following order reading from left to right and top to bottom: Gas, Food, Lodging, Phone * , Hospital, Camping.

   * The phone symbol shall not be shown whenever any Gas, Food, Lodging or Camping symbol appears.

2. Symbols shall appear consecutively on the sign with no positions left blank or reserved for intermediate symbols not currently approved for a particular interchange.

3. All motorist service signs to have White Legend and Border with Blue Background.

4. For mounting details see Index 11200 for Type "A" breakaway or Index 11860 for Type "C" Frangibility.

12/3/2015 11:45:01 AM

LAST REVISION	REVISION	DESCRIPTION:			INDEX NO.	SHEET NO.
07/01/09			FY 2016-17 DESIGN STANDARDS	SIGNING FOR MOTORIST SERVICES	17350	1 of 1

Sign No. FTP-10-06

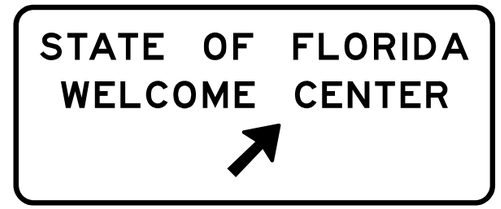

Sign No. FTP-11-06

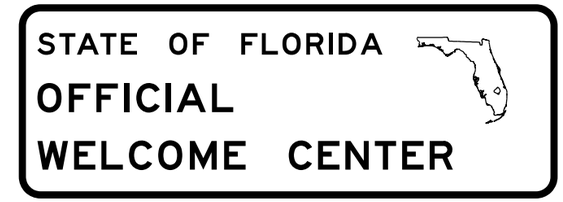

Sign No. FTP-12-06

Sign No. FTP-13-06

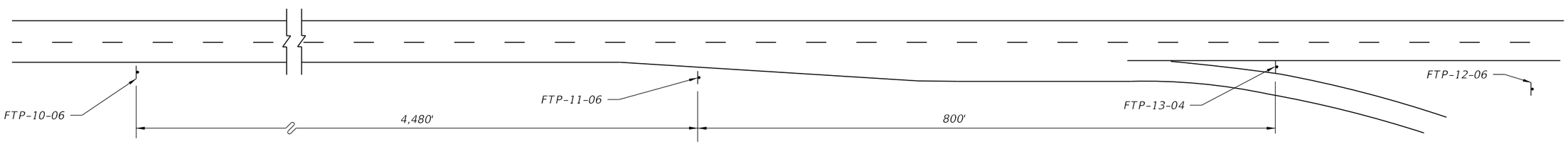

Note: Roadway not drawn to scale
Distances shown are adequate for driver communication but may be altered slightly if conditions require.

Sign No. FTP-14-06

Note: Sign FTP-14-06 shall be used as a supplemental guide sign at interchanges which have a Tourist Information Center approved for such signing (locate half-way between normal guide signs)

Notes:

1. Signs and sign structures shall be erected in accordance with the details shown on Index No. 11200.
2. Sign FTP-12-06 shall be located on the Welcome Center grounds in proximity to the building and as far from the main line roadway as possible (2 signs back to back).
3. Sign FTP-10-06, 11-06, 12-06 shall be located as limited access highways only.
4. All legend to be Series E.
5. See Index No. 17355 for sign details.

FOR LIMITED ACCESS HIGHWAYS

SIGN NO. FTP-15A-06

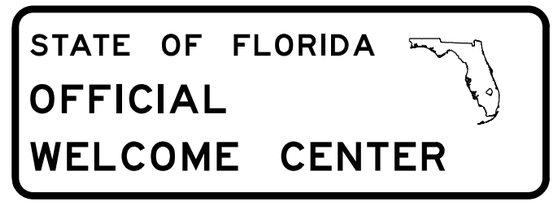

SIGN NO. FTP-12-06

SIGN NO. FTP-15B-06

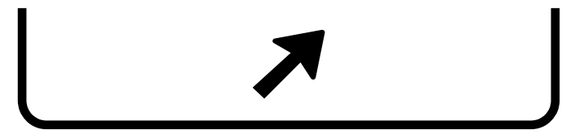

SIGN NO. FTP-15C-06

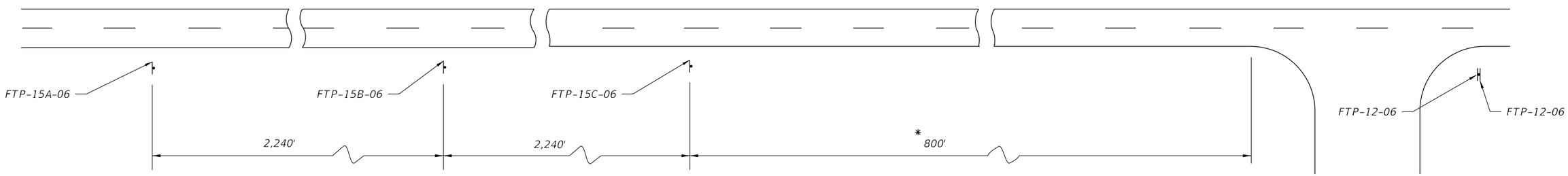

* 800' Maximum For Rural Conditions
50' Minimum For Rural Conditions

Notes:

1. Signs and sign structures shall be erected in accordance with the details shown on Index 11200.
2. Sign FTP-12-06 shall be located on the Welcome Center grounds in proximity to the building and as far from the Main Line Roadway as possible (2 signs back to back).
3. All legend to be Series E.
4. One sign FTP-15A-06 or 15B-06 should be used depending on speed, roadside development & geometric conditions.

FOR PRIMARY HIGHWAYS

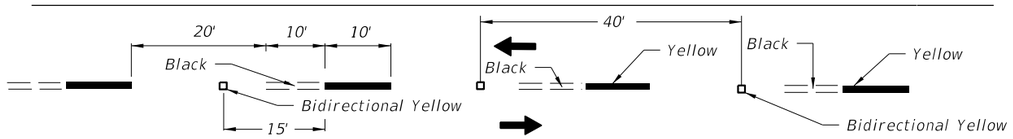

ALTERNATING SKIP LINE

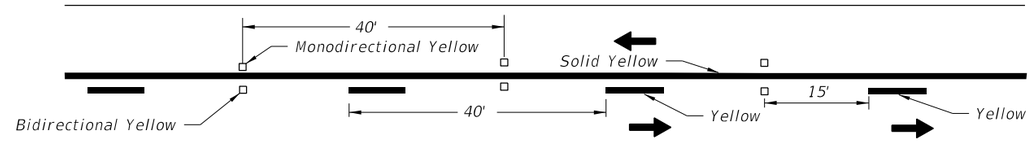

SOLID LINE WITH SKIP

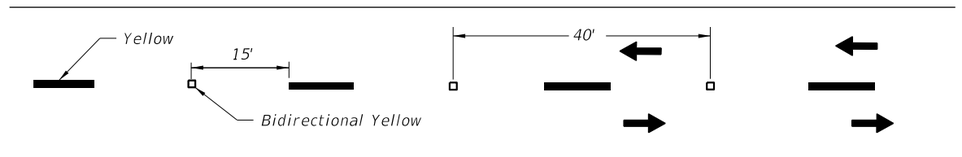

SKIP LINE

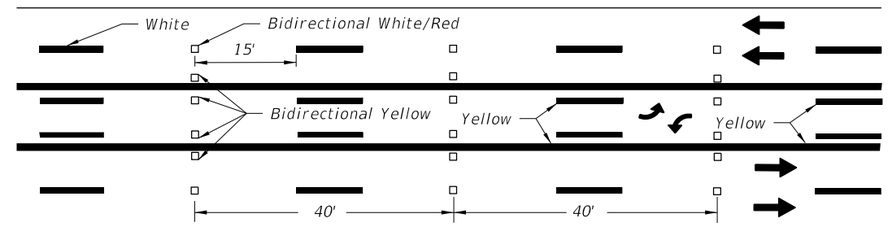

SKIP LINE WITH TWO-WAY LEFT TURN LANE

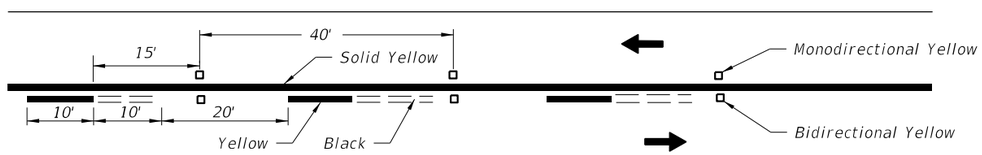

SOLID LINE WITH ALTERNATING SKIP

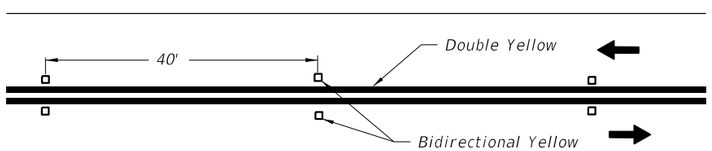

DOUBLE SOLID LINE

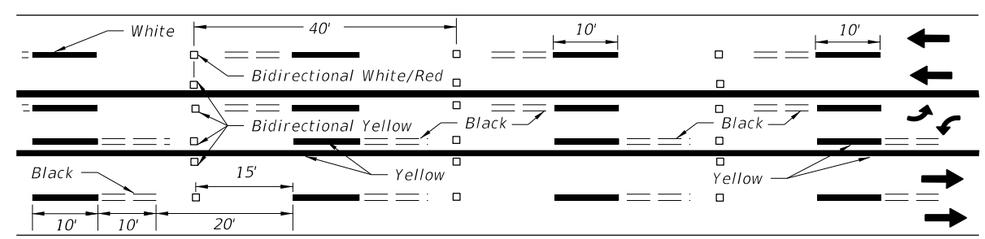

ALTERNATING SKIP LINE WITH TWO-WAY LEFT TURN LANE

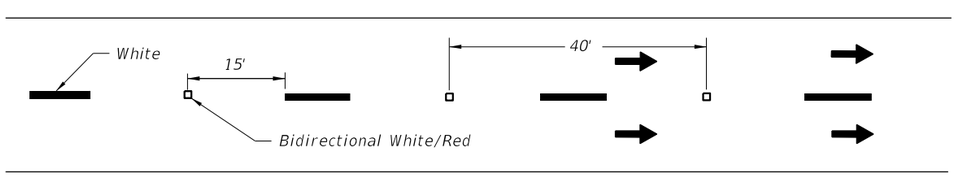

MULTILANE

1. Reflective Pavement Markers shall be spaced at 40' on all skip lane lines and skip center lines. This spacing may be reduced to 20' if specifically called for in the plans.
2. The spacing on solid lines and solid/skip combination lines shall be 40'.
3. All RPM's shall be offset 1" from solid longitudinal lines.
4. These spacings may be reduced for sharp curves if required.
5. All RPM's shall be class "B".

12/3/2015 11:45:03 AM

LAST REVISION	REVISION	DESCRIPTION:			INDEX NO.	SHEET NO.
01/01/10			FY 2016-17 DESIGN STANDARDS	TYPICAL PLACEMENT OF REFLECTIVE PAVEMENT MARKERS	17352	1 of 2

NOTES

1. Set Raised Pavement Markers 1" from line.
2. Center the Raised Pavement Markers between chevrons.

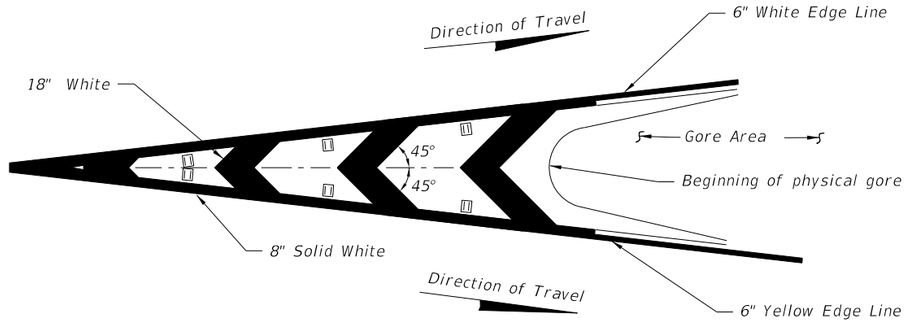

RPM PLACEMENT FOR TRAFFIC CHANNELIZATION AT GORE (TRAFFIC FLOWS IN SAME DIRECTION)

NOTE

Raised pavement markers (Bidirectional White/Red) should be used in all gores of this type

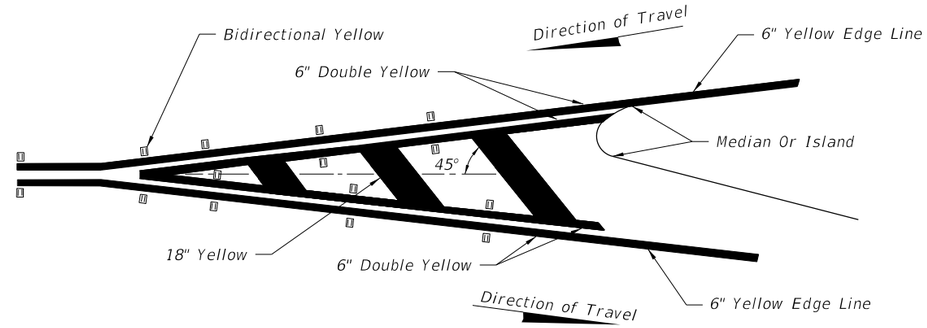

RPM PLACEMENT FOR TRAFFIC SEPARATION (TRAFFIC FLOWS IN OPPOSITE DIRECTION)

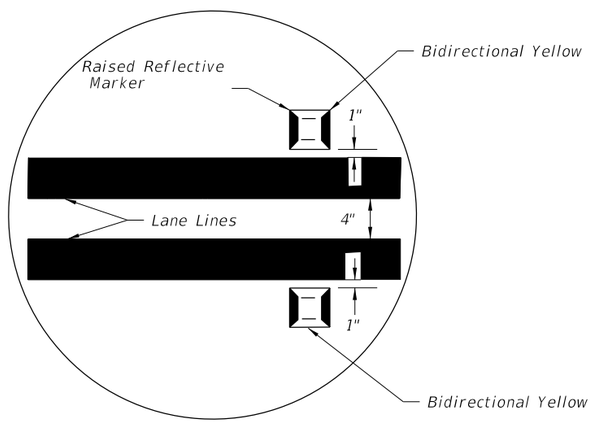

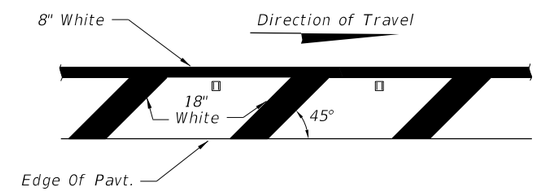

PLACEMENT OF RPM'S ON SHOULDER MARKINGS

Right side of the roadway shown. For the left side of roadway, the pavement marking is yellow and oriented opposite hand.

For Placement Of RPM's On Ramps See Index 17345.

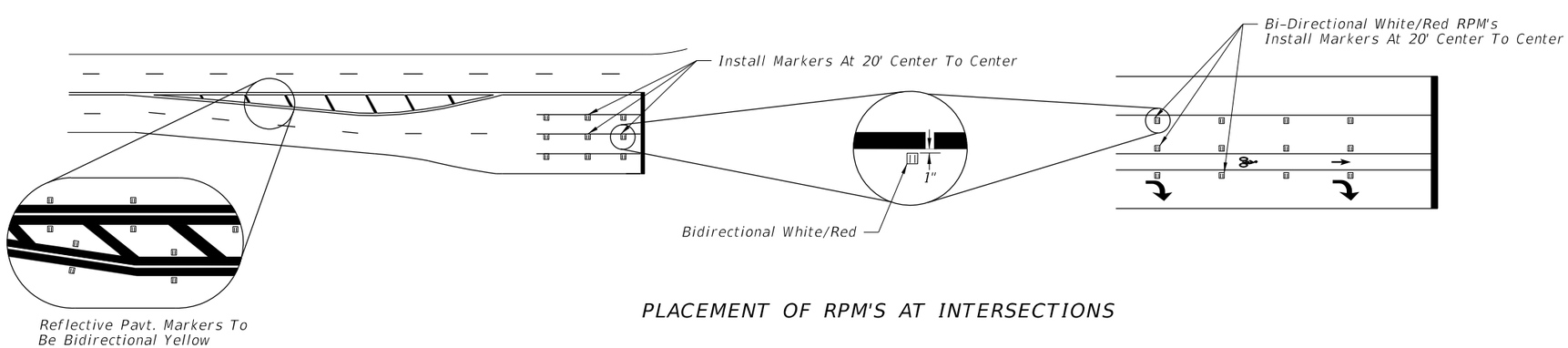

PLACEMENT OF RPM'S AT INTERSECTIONS

12/3/2015 11:45:03 AM

LAST REVISION	REVISION	DESCRIPTION:			INDEX NO.	SHEET NO.
07/01/15			FY 2016-17 DESIGN STANDARDS	TYPICAL PLACEMENT OF REFLECTIVE PAVEMENT MARKERS	17352	2 of 2

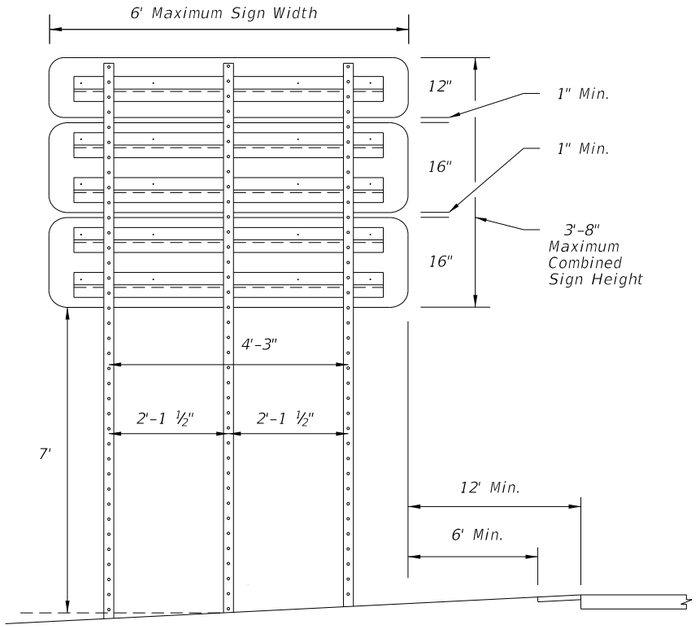

STEEL U-CHANNEL TRIPLE POST
DIRECT BURIAL

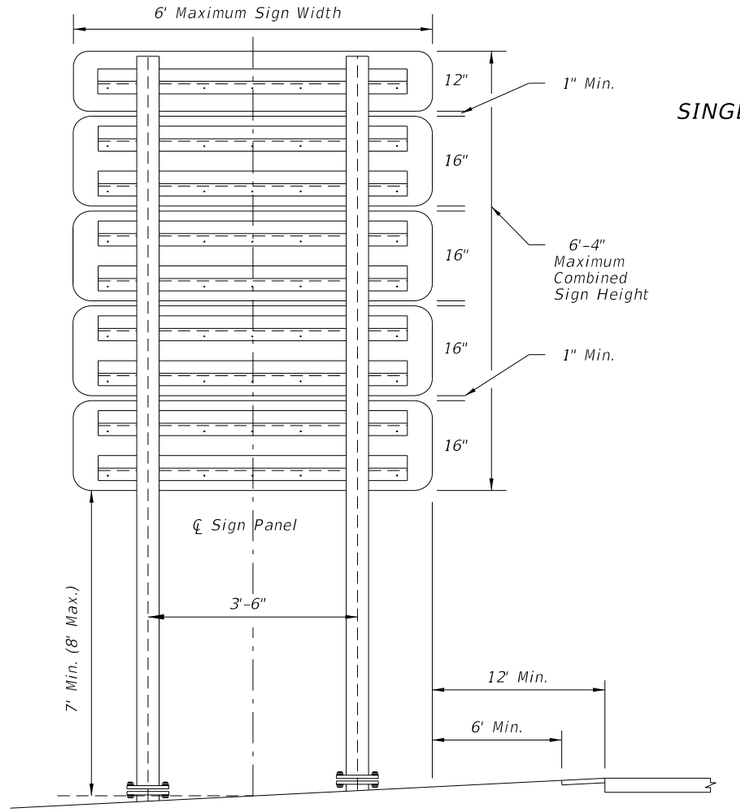

TWO POST STEEL I BEAM
WITH SLIP BASE

SINGLE POST SIGN EXAMPLES

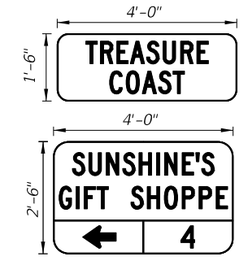

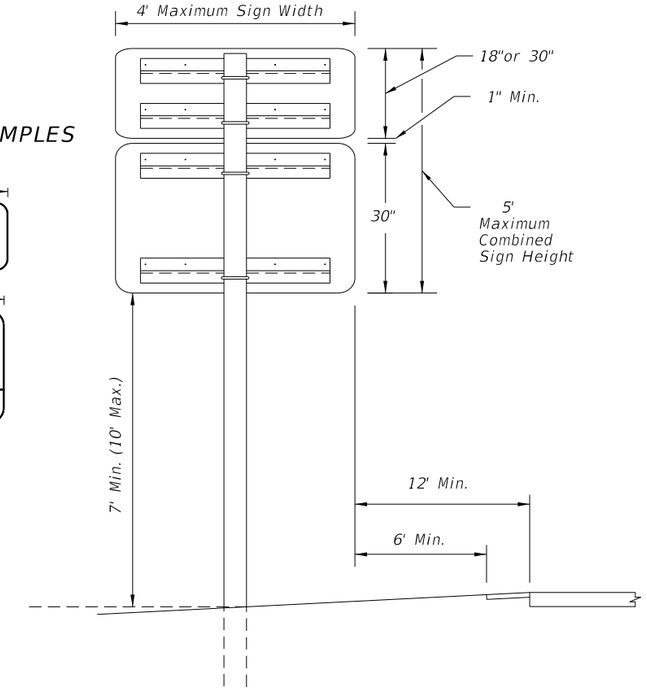

SINGLE POST
ALUMINUM
ROUND TUBE

MULTIPOST SIGN EXAMPLES

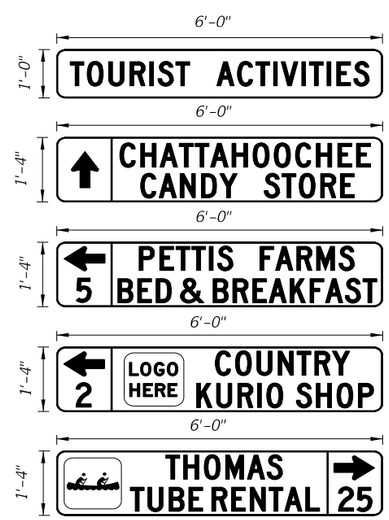

General Notes:

1. Signs Must Comply With Rule 14-51, Florida Administrative Code.
2. Text for Signs Shall Be 6" Type C Lettering.
3. For Aluminum Round Tube Assembly and Foundation Detail, see Index 11860.
4. For Steel I Beam Assembly and Foundation Detail, see Index 11200.
5. For Steel U-Channel Assembly and Foundation Detail, See Work Zone Sign Supports in Index 600. Galvanize Steel U-Channel in accordance with ASTM 123.

DESIGN FOR TOURIST ORIENTED DIRECTIONAL SIGNS
(Options for Aluminum Round Tube, Steel I Beam and Steel U-Channel.)

No. of Signs (Total Area)	Single Post Configuration		Two Post Configuration		Three Post Configuration	
	3-1/2" X 0.125" Aluminum Tube Direct Burial	4" X 0.125" Aluminum Tube Slip Base	S3X5.7 Steel I Beam Slip Base	W6X12 Steel I Beam Slip Base	3 lb/ft Steel U-Channel Direct Burial	4 lb/ft Steel U-Channel Lap Splice
10	OK	OK	NA	NA	NA	NA
16-20	NA	OK	NA	NA	NA	NA
14-16	NA	NA	OK	OK	OK	OK
22-24	NA	NA	OK	OK	NA	OK *
30-32	NA	NA	NA	OK	NA	NA
38	NA		NA	OK	NA	NA

* Limited to 22 s.f. Total Sign Area.

NA

12/3/2015 11:45:04 AM

LAST REVISION	REVISION	DESCRIPTION:			INDEX NO.	SHEET NO.
07/01/15			FY 2016-17 DESIGN STANDARDS	TOURIST ORIENTED DIRECTIONAL SIGNS	17354	1 of 1

FREEWAY USE

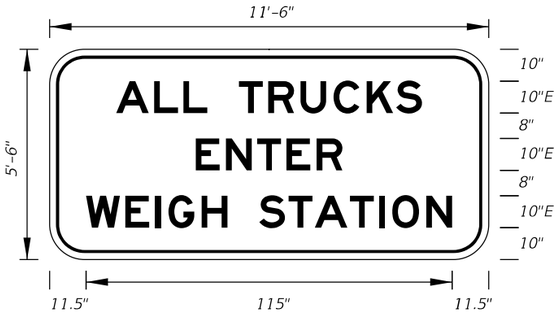

FTP-1-06
11'-6" X 5'-6"
9" Radii 2" Border

10" Series E Legend
White Background
Black Legend and Border

OTHER THAN FREEWAY USE

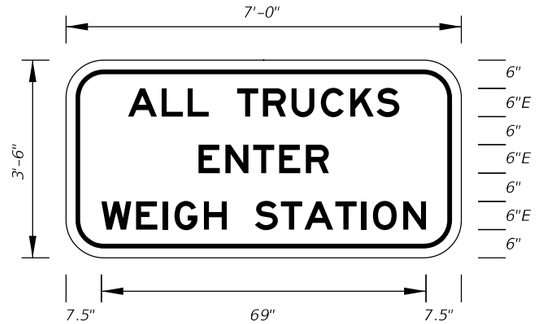

FTP-2-06
7' X 3'-6"
6" Radii 2" Border

6" Series E Legend
White Background
Black Legend and Border

OTHER THAN FREEWAY USE

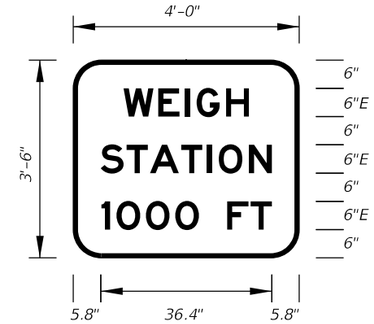

FTP-3-06
4' X 3'-6"
6" Radii 2" Border

6" Series E Legend
Green Background
White Legend and Border

OTHER THAN FREEWAY USE

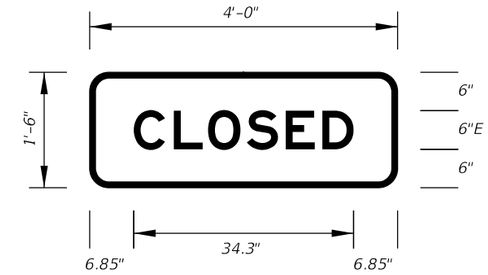

FTP-4-06
4' X 1'-6"
3" Radii 2" Border

6" Series E Legend
Green Background
White Legend and Border

Note:
FTP-4-06 to be
used with FTP-3-06

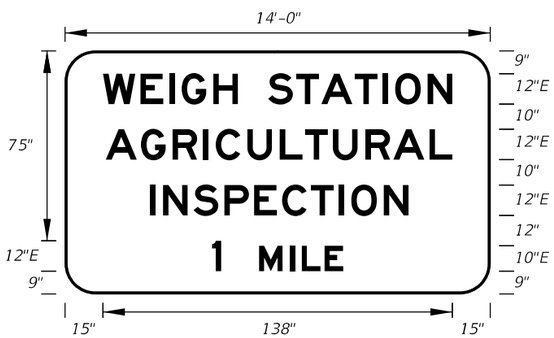

FTP-5-06
14' X 8'
12" Radii 2" Border

12" and 10" Series E Legend
Green Background
White Legend and Border

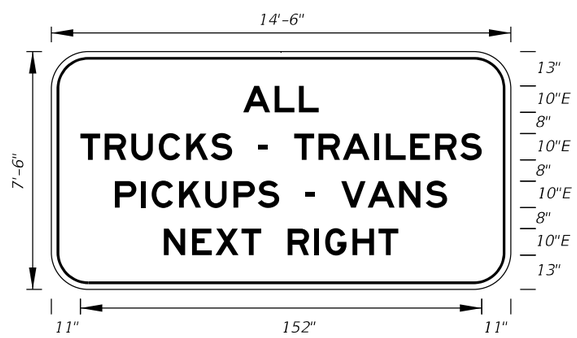

FTP-6A-06
14'-6" X 7'-6"
12" Radii 2" Border

10" Series E Legend
White Background
Black Legend and Border

On Interstate Station
Delete Pickups-Vans,
and reduce Sign height
accordingly.

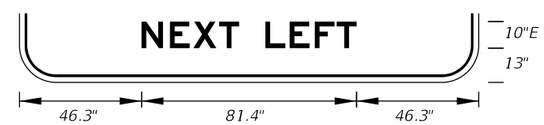

FTP-6B-06
14'-6" X 7'-6"
12" Radii 2" Border

10" Series E Legend
White Background
Black Legend and Border

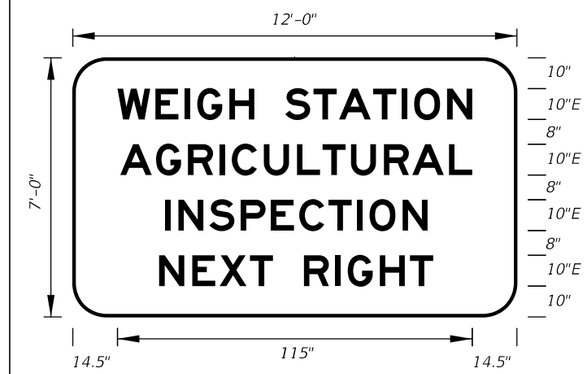

FTP-7A-06
12' X 7'
11" Radii 2" Border

10" Series E Legend
Green Background
White Legend and Border

FTP-7B-06
12' X 7'
11" Radii 2" Border
10" Series E Legend
Green Background
White Legend and Border

FREEWAY USE

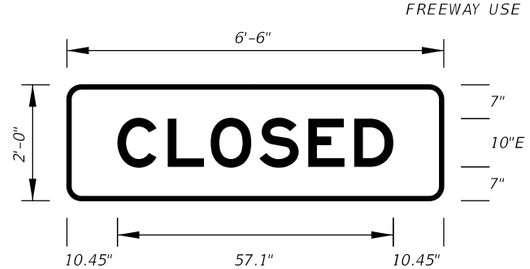

FTP-8-06
6'-6"X 2'
3" Radii 2" Border
10" Series E Legend
Green Background
White Legend and Border

Note:
FTP-8-06 to be
used with FTP-7A-06
& FTP-7B-06.

FTP-9B-06-LEFT ARROW

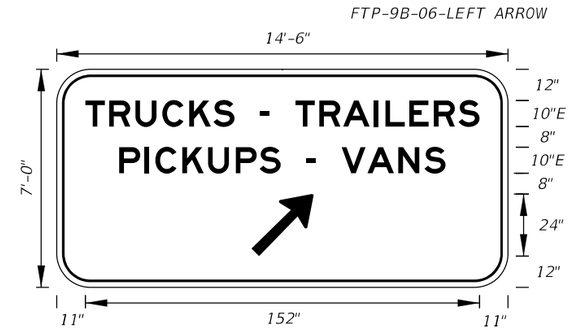

FTP-9A-06
14'-6" X 7'
11" Radii 2" Border

10" Series E Legend
Green Background
White Legend and Border

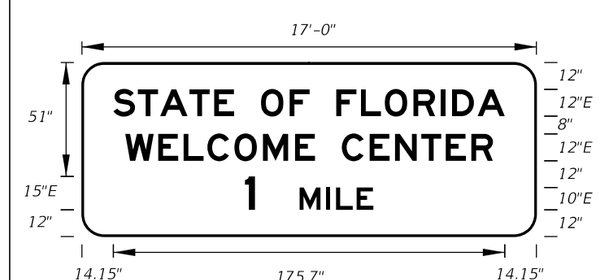

FTP-10-06
17' X 6'-6"
10" Radii 2" Border

12", 10" and 15" Series E Legend
Blue Background
White Legend and Border

12/3/2015 11:45:06 AM

LAST REVISION	REVISION	DESCRIPTION:			INDEX NO.	SHEET NO.
07/01/14			FY 2016-17 DESIGN STANDARDS	SPECIAL SIGN DETAILS	17355	1 of 11

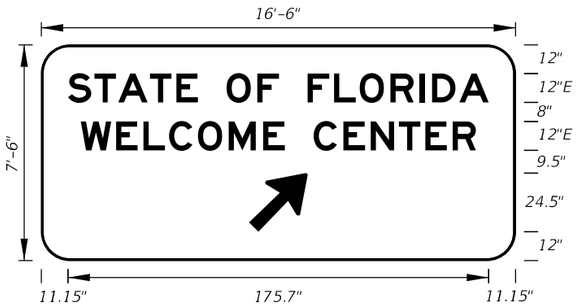

FTP-11-06
16'-6" X 7'-6"
12" Radii 2" Border
12" Series E Legend
Blue Background
White Legend and Border

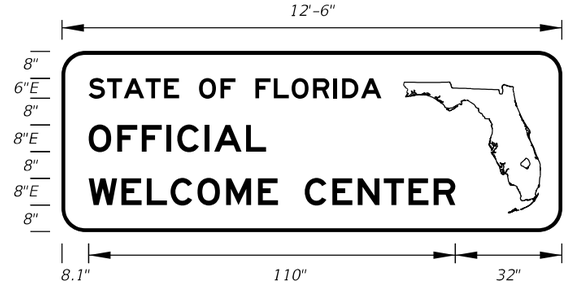

FTP-12-06
12'-6" X 4'-6"
7" Radii 2" Border
6" and 8" Series E Legend
Blue Background
White Legend and Border

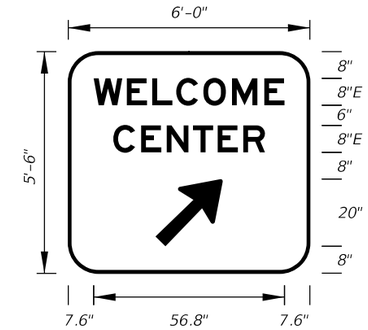

FTP-13-06
6' 0" X 5'-6"
9" Radii 2" Border
8" Series E Legend
Blue Background
White Legend and Border

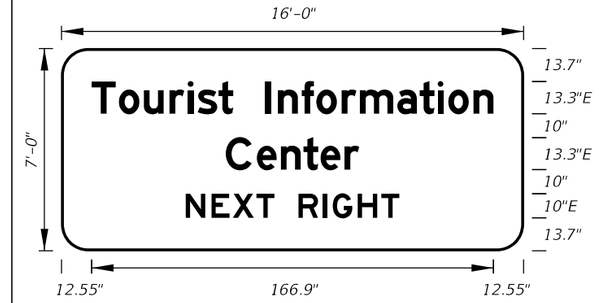

FTP-14-06
16'-0" X 7'-0"
11" Radii 2" Border
13.3 and 10" Series E Legend
Blue Background
White Legend and Border

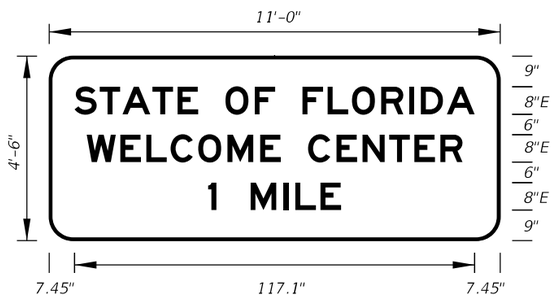

FTP-15A-06
11'-0" X 4'-6"
7" Radii 2" Border
8" Series E Legend
Blue Background
White Legend and Border

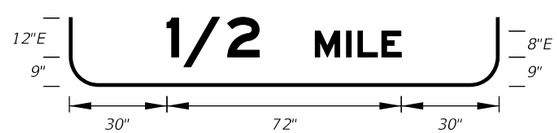

FTP-15B-06
11'-0" X 5'-0"
8" Radii 2" Border
8" and 12" Series E Legend
Blue Background
White Legend and Border

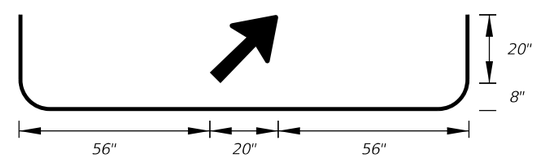

FTP-15C-06
11'-0" X 5'-6"
9" Radii 2" Border
8" Series E Legend
Blue Background
White Legend and Border

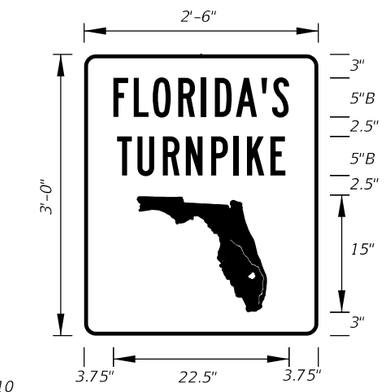

FTP-16-10
2'-6" X 3'-0"
1.5" Radii 3/4" Border
5" Series B Legend
Green Background
White Legend, Border, and Florida Symbol

FTP-19-06
1' X 1'-6"
4" Radii 3/8" Border
Top 4" Series D
Bottom 2" Series C
White Background
Green Legend and Border

All Letters

1" Series C
1" Spacing
Between Lines
of Text

FTP-20-06
1' X 1'-6"
2" Radii 3/8" Border
1" Series C Legend
Color
Background
Legend and Border

Top Bottom
Blue White
White Black

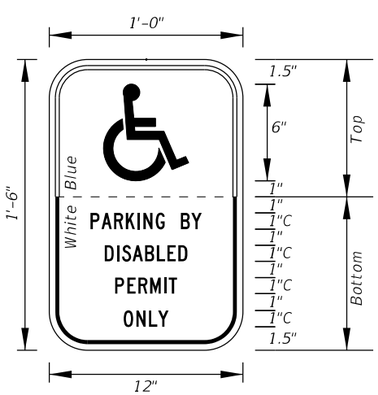

All Letters

1.5" Series C
1" Spacing
Between Lines
of Text

FTP-21-06
1'-6" X 2'-6"
2" Radii 3/8" Border
1.5" Series C Legend
Color
Background
Legend and Border

Top Bottom
Blue White
White Black

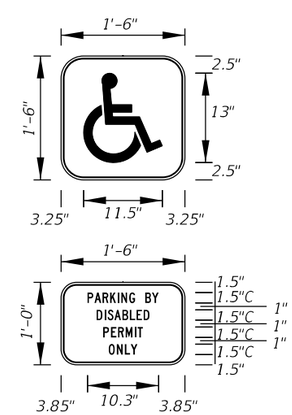

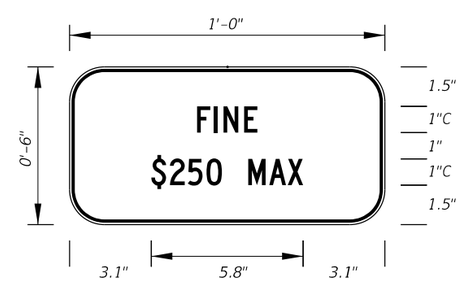

FTP-22-06
1' X 6"
1" Radii 3/8" Border
1" Series C Legend
White Background
Black Legend and Border

Supplemental Panel
for the FTP-20-06
and FTP-21-06 signs

12/3/2015 11:45:07 AM

LAST REVISION	REVISION	DESCRIPTION:	FY 2016-17 DESIGN STANDARDS	SPECIAL SIGN DETAILS	INDEX NO.	SHEET NO.
07/01/14					17355	2 of 11

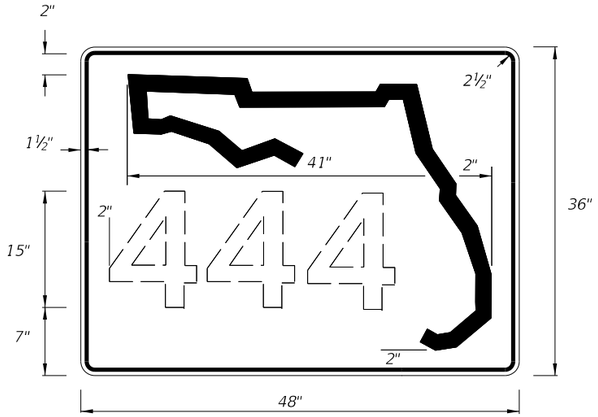

INDEPENDENT USE FOR FREEWAY

DIGITS	NUMERAL SIZE	SERIES	PANEL SIZE
1-2	10"	D	24" x 24"
3	8"	D	24" x 24"
3	8"	D	30" x 24"
4	8"	C	30" x 24"
1-3	15"	C	48" x 36"
4	12"	C	48" x 36"

Note:

1. The 24" X 24" panel shall only be used for a 3 digit route when the panel is to be used on a sign cluster with other 24" X 24" panels.
2. Florida Route Marker shall have Black Legend with White Background.
3. Stroke width of State Outline shall be 1".
4. 2" Radii, ⅝" Border.

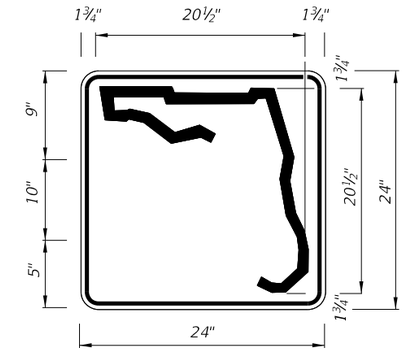

1 or 2 DIGITS

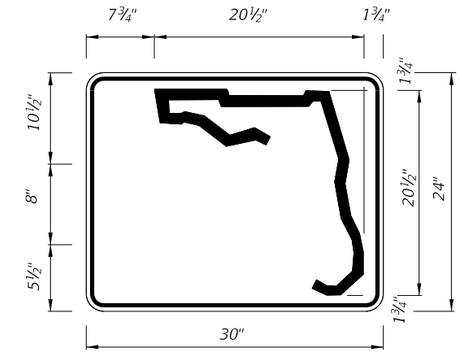

3 or 4 DIGITS

INDEPENDENT USE OTHER THAN FREEWAY

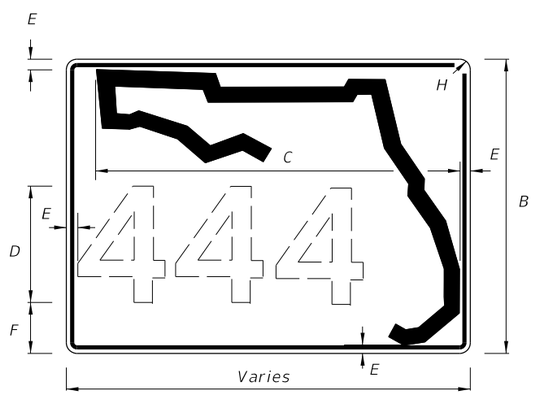

3 OR MORE DIGITS

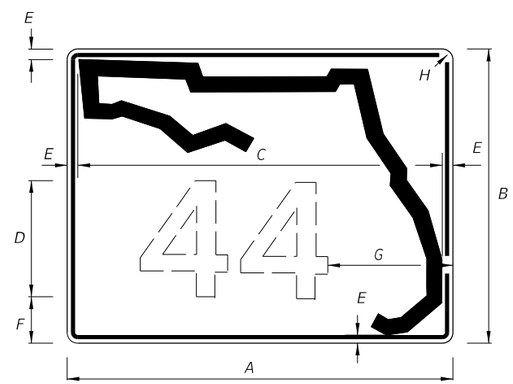

1 OR 2 DIGITS

A	B	C	D	E	F	G	H
30"	24"	26"	12"	1¼"	2¾"	8¼"	1¼"
36"	30"	32"	15"	1¼"	3¼"	8¾"	1¼"
42"	36"	38"	15"	1¼"	6¼"	11"	1¼"

GUIDE SIGN USE

Notes:
1. Florida marker shall have Black Legend with White Background.
2. Stroke width of State outline to be 1¼" for Guide Sign.
3. Numbers are series D.

FLORIDA ROUTE MARKER
FTP-17-06

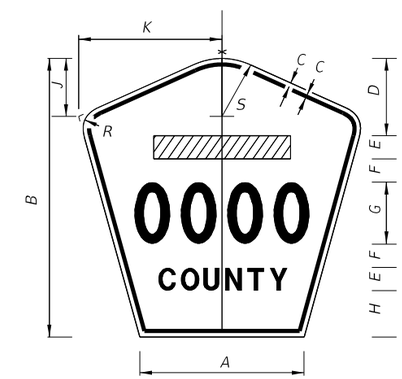

Notes :
1. All Legend Series "D".
2. Color: Yellow Legend and Border on Blue Background.
3. When used on a guide sign, marker must be overlaid on a rectangular Yellow Background as shown in chart.

SIGN	DIMENSIONS												**
	A	B	C	D	E	F	G	H	J	K	R	S	
4 DIGIT POST MOUNTED	25⅛"	42"	¾"	10"	4"	4"	8"	8"	8⅜"	22"	5"	8¾"	
2 DIGIT OVERHEAD	21½"	36"	½"	7½"	3"	3"	12"	4½"	7⅛"	18⅞"	4¼"	7½"	42"x 42"
3 DIGIT OVERHEAD	25⅛"	42"	¾"	8"	4"	4"	12"	6"	8⅜"	22"	5"	8¾"	48"x 48"
4 DIGIT OVERHEAD	29⅞"	48"	¾"	8"	5"	5"	12"	8"	9¾"	25⅝"	5¾"	10¼"	52"x 52"

M1-6 COUNTY ROUTE MARKER DETAIL
FTP-18-06

12/3/2015 11:45:07 AM

LAST REVISION	REVISION	DESCRIPTION:				
07/01/14			FY 2016-17 DESIGN STANDARDS	SPECIAL SIGN DETAILS	INDEX NO. 17355	SHEET NO. 3 of 11

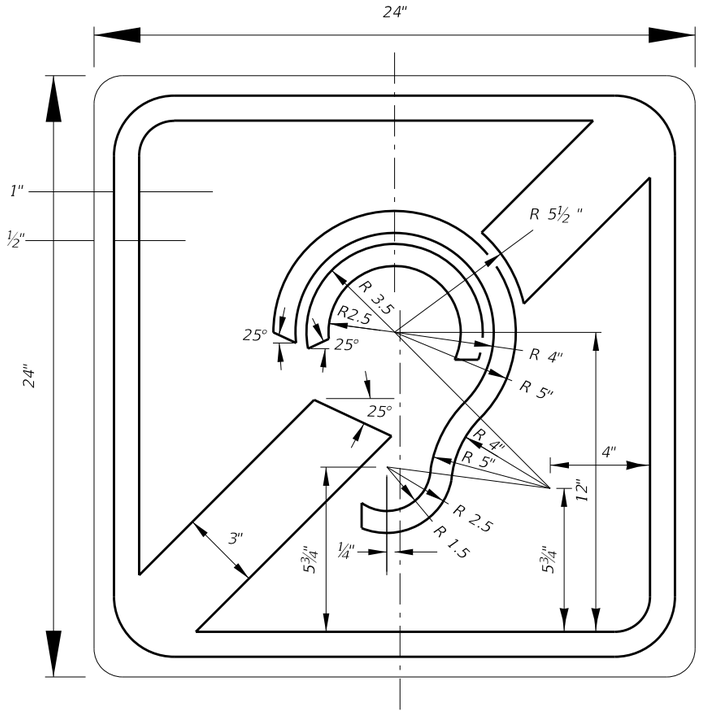

FTP-23-06
2' X 2'
1.5" Radii ⅝" Border
Blue Background
White Legend and Border

INTERNATIONAL SYMBOL OF ACCESS FOR HEARING LOSS

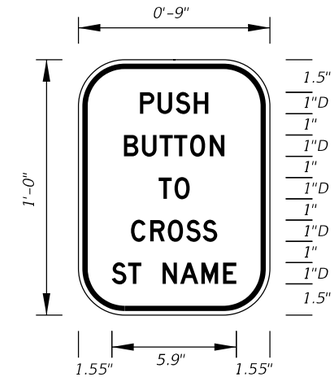

FTP-25-06
9" X 1'-0"
2" Radii ⅜" Border
1" Series D Legend
White Background
Black Legend and Border

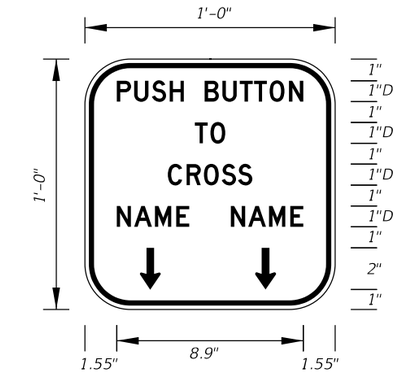

FTP-26-06
1' X 1'
2" Radii ⅜" Border
1" Series D Legend
White Background
Black Legend and Border

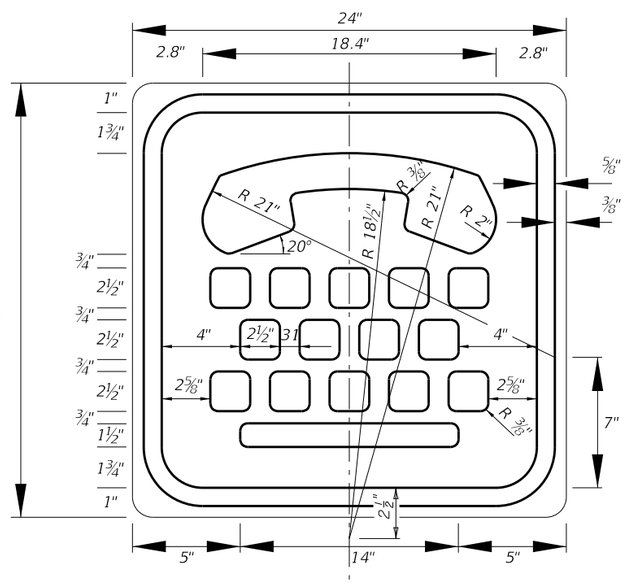

FTP-24-06
2' X 2'
1.5" Radii ⅝" Border
Blue Background
White Legend and Border

INTERNATIONAL TDD SYMBOL

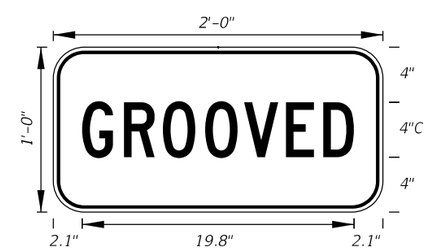

FTP-29-06
2'-0" X 1'-0"
2" Radii ⅝" Border
4" Series C Legend
Yellow Background
Black Legend and Border

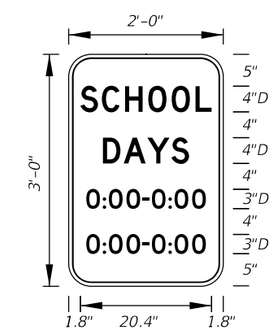

FTP-30-06
2'-0" X 3'-0"
3" Radii ⅝" Border
White Background
Black Legend and Border

12/3/2015 11:45:08 AM

LAST REVISION	REVISION	DESCRIPTION:			INDEX NO.	SHEET NO.
07/01/14			FDOT FY 2016-17 DESIGN STANDARDS	SPECIAL SIGN DETAILS	17355	4 of 11

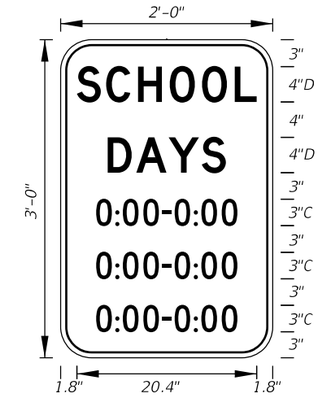

FTP-30A-06
2' X 3'
3" Radii 5/8" Border
Top 4" Series D Legend
Bottom 3" Series C Legend
White Background
Black Legend and Border

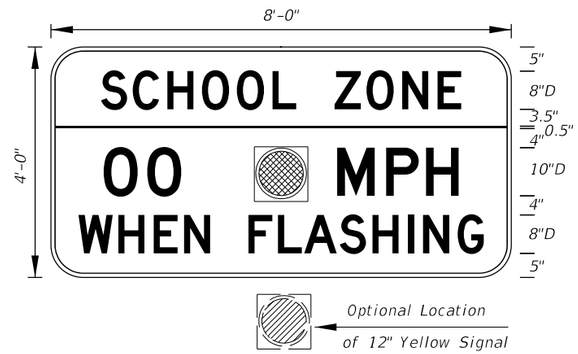

FTP-31-06
8' X 4'
6" Radii 3/4" Border
Series D Legend
Yellow Background Top
White Background Bottom
Black Legend and Border

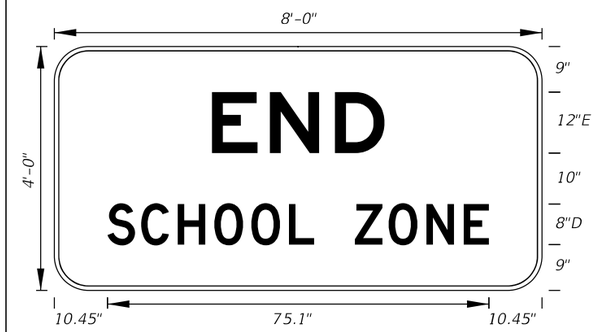

FTP-32-06
8' X 4'
6" Radii 3/4" Border
12" Series E and 8" Series D Legend
White Background
Black Legend and Border

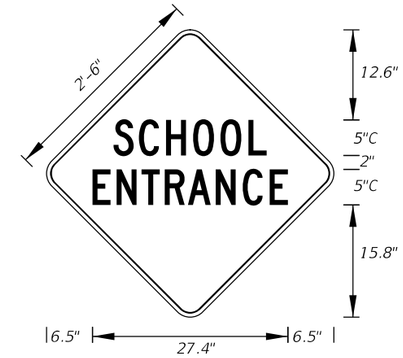

FTP-33-06
2'-6" X 2'-6"
2" Radii 3/4" Border
5" Series C Legend
Yellow Background
Black Legend and Border

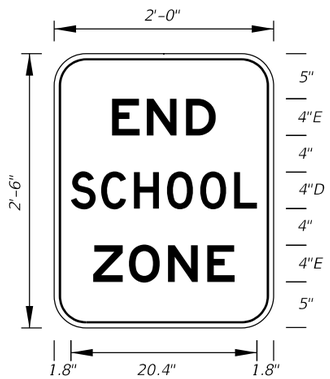

FTP-34-06
2' X 2'-6"
3" Radii 5/8" Border
4"Series D and E Legend
White Background
Black Legend and Border

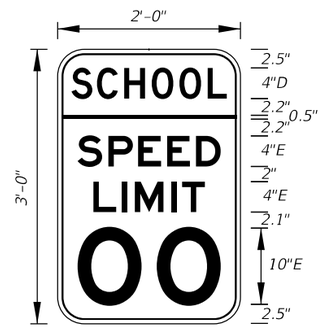

FTP-35-06
2' X 3'
3" Radii 5/8" Border
Top 4" Series D Legend
Bottom 4" and 10" Series E Legend
Yellow Background Top
White Background Bottom
Black Legend and Border

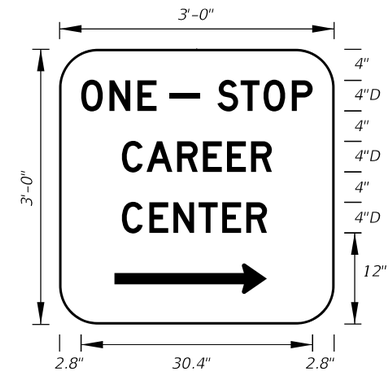

FTP-36-06
3' X 3'
5" Radii
4" Series D Legend
Green Background
White Legend and Border

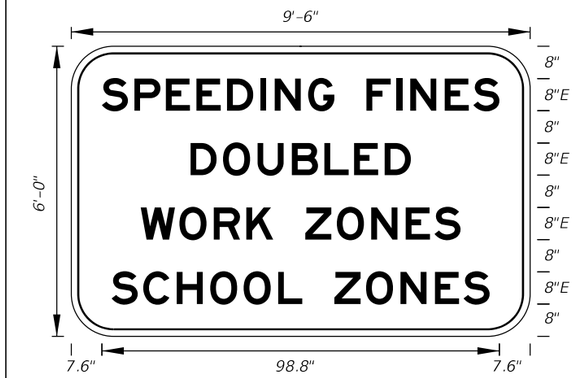

FTP-37-06
9'-6"X 6'
9" Radii 2" Border
8" Series E Legend
White Background
Black Legend and Border
State Line Sign

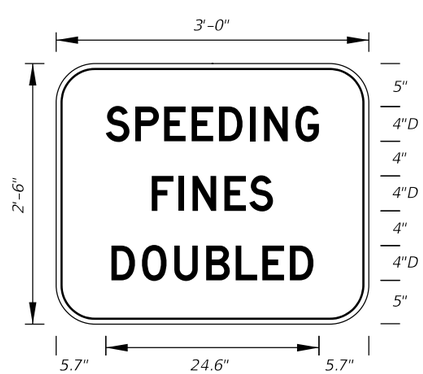

FTP-38-06
3' X 2'-6"
4" Radii 3/4" Border
4" Series D Legend
White Background
Black Legend and Border

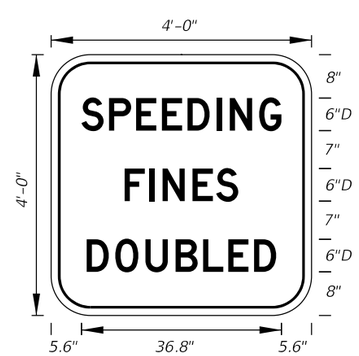

FTP-39-06
4' X 4'
6" Radii 3/4" Border
6" Series D Legend
White Background
Black Legend and Border
Freeway Sign

FTP-40-06
3'-6" X 4'
6" Radii 3/4" Border
3" and 6" Series C Legend
White Background
Black Legend and Border

FTP-41-06
2'-6"X 3'
4" Radii 3/4" Border
2" and 4" Series C Legend
White Background
Black Legend and Border

12/3/2015 11:45:09 AM

LAST REVISION	REVISION	DESCRIPTION:	FY 2016-17 DESIGN STANDARDS	SPECIAL SIGN DETAILS	INDEX NO.	SHEET NO.
07/01/14					17355	5 of 11

FTP-42-06
4'X 2'-6"
3" Radii
Top 4" Series C Legend

Bottom 2" Series EM Legend
White Background
Blue Legend and Border

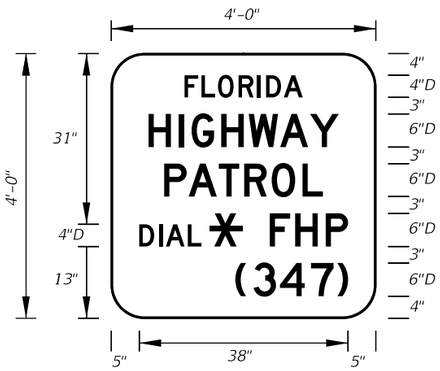

FTP-43-06
4' X 4'
6" Radii 1" Border
Top 4" Series D Legend

Bottom 6" Series D Legend
Blue Background
White Legend and Border

FTP-44-06
9' X 6'
9" Radii ¾" Border

8" Series D Legend
White Background
Black Legend and Border

FTP-45-06
4' X 3'
5" Radii ¾" Border

4" Series C Legend
White Background
Black Legend and Border

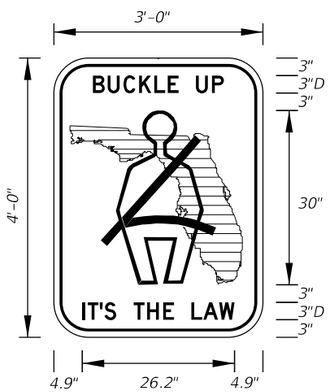

FTP-46-06
3' X 4'
5" Radii ¾" Border
3" Series D Legend
White Background Green Florida Symbol
Black Legend, Border and Man Belt Symbol

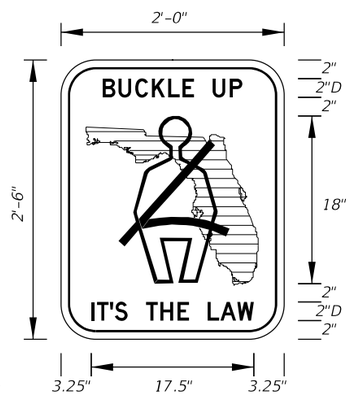

FTP-47-06
2' X 2'-6"
3" Radii ⅝" Border
2" Series D Legend
White Background Green Florida Symbol
Black Legend, Border and Man Belt Symbol

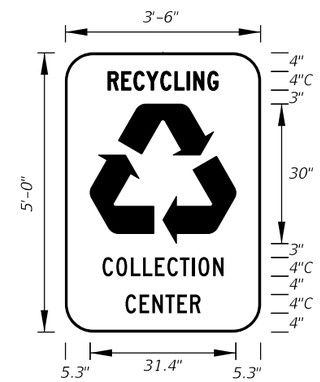

FTP-48-06
3'-6" X 5'
6" Radii
4" Series C Legend
Green Background
White Legend, Border and Symbol

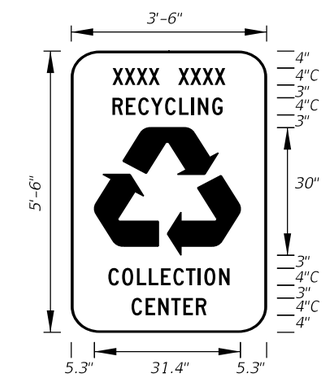

FTP-49-06
3'-6" X 5'-6"
6" Radii
4" Series C Legend
Green Background Municipality Name Optional
White Legend, Border and Symbol

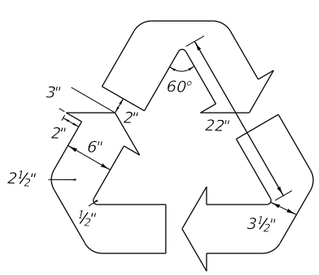

Detail for FTP-48-06 and FTP-49-06

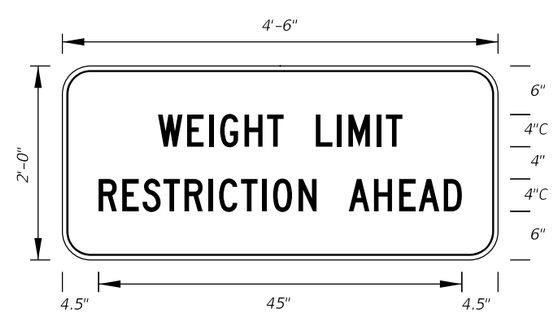

FTP-50-06
4'-6" X 2'
3" Radii ¾" Border
4" Series C Legend
Yellow Background
Black Legend and Border

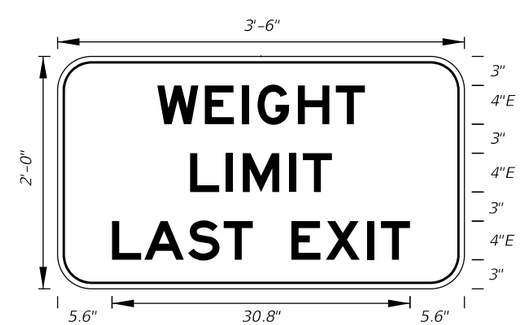

FTP-51-06
3' X 2'
3" Radii ¾" Border

4" Series E Legend
White Background
Black Legend and Border

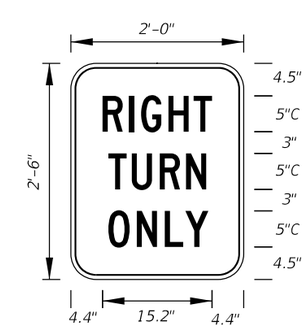

FTP-52-06
2' X 2'-6"
3" Radii ⅝" Border

5" Series C Legend
White Background
Black Legend and Border

12/3/2015 11:45:09 AM

LAST REVISION	REVISION	DESCRIPTION:			INDEX NO.	SHEET NO.
07/01/14			FDOT FY 2016-17 DESIGN STANDARDS	SPECIAL SIGN DETAILS	17355	6 of 11

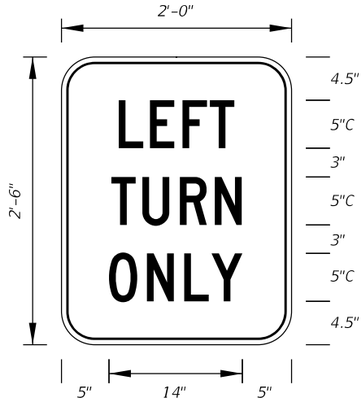

FTP-53-06
2' X 2'-6"
3" Radii ⅝" Border
5" Series C Legend
White Background
Black Legend and Border

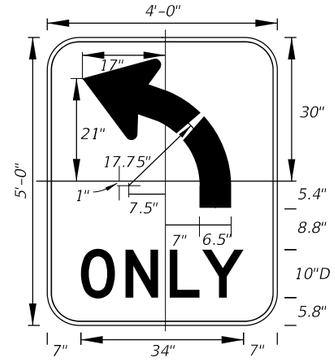

FTP-54L-06
4' X 5'
6" Radii ¾" Border
10" Series D Legend
White Background
Black Legend and Border

FTP-54R-06 for
(Right Turn Arrow)

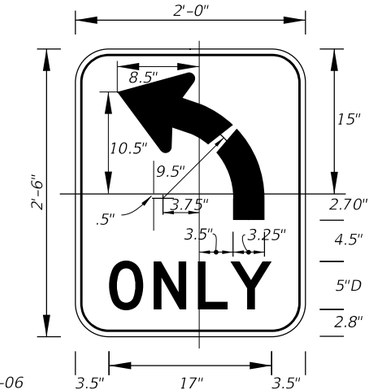

FTP-55L-06
2' X 2'-6"
3" Radii ⅜" Border
5" Series D Legend
White Background
Black Legend and Border

FTP-55R-06 for
(Right Turn Arrow)

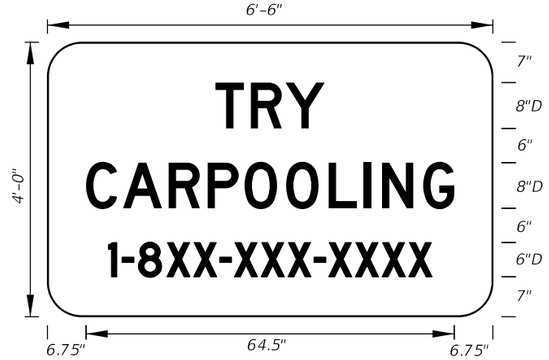

FTP-56-06
6'-6"X 4'
6" Radii ¾" Border
8" and 6" Series D Legend
Blue Background
White Legend and Border

Design Project Manager
or Transit Administrator
will supply correct 1-8XX
number.

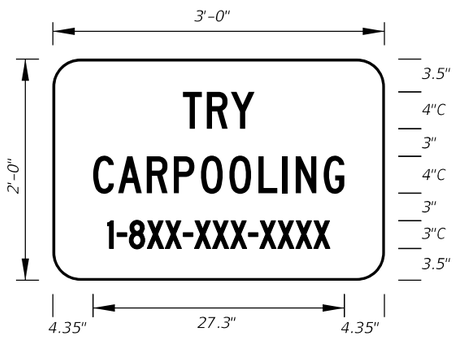

FTP-56A-06
3' X 2'
3" Radii
4" and 3" Series C Legend
Blue Background
White Legend and Border

Design Project Manager
or Transit Administrator
will supply correct 1-8XX
number.

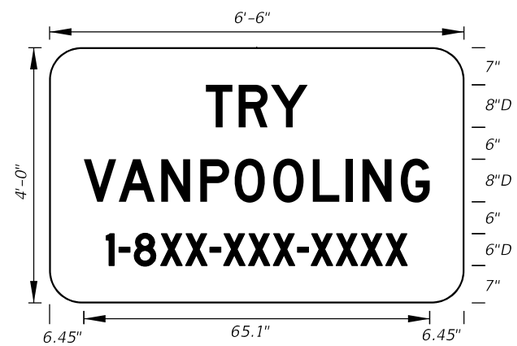

FTP-57-06
6'-6" X 4'
6" Radii
8"and 6" Series D Legend
Blue Background
White Legend and Border

Design Project Manager
or Transit Administrator
will supply correct 1-8XX
number.

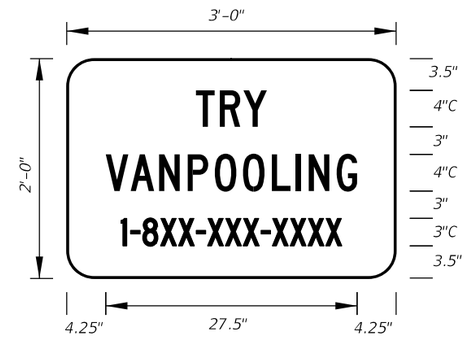

FTP-58-06
3' X 2'
3" Radii
4" and 3" Series C Legend
Blue Background
White Legend and Border

Design Project Manager
or Transit Administrator
will supply correct 1-8XX
number.

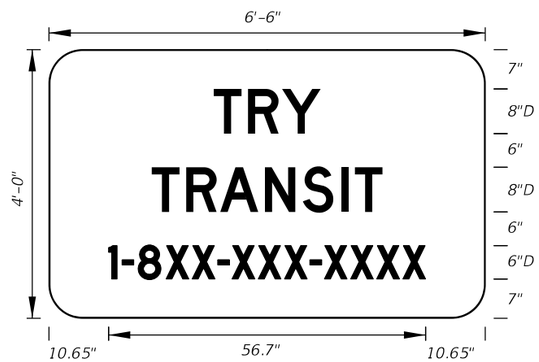

FTP-59-06
6'-6" X 4'
6" Radii
8" and 6" Series D Legend
Blue Background
White Legend and Border

Design Project Manager
or Transit Administrator
will supply correct 1-8XX
number.

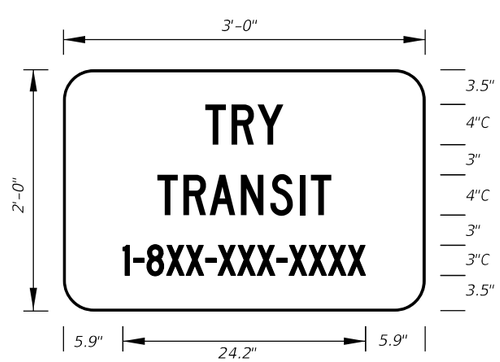

FTP-60-06
3' X 2'
3" Radii
4"and 3" Series C Legend
Blue Background
White Legend and Border

Design Project Manager
or Transit Administrator
will supply correct 1-8XX
number.

FTP-61-06
3' X 2'
3" Radii ¾" Border
4" and 3" Series C Legend
Yellow Background
Black Legend and Border

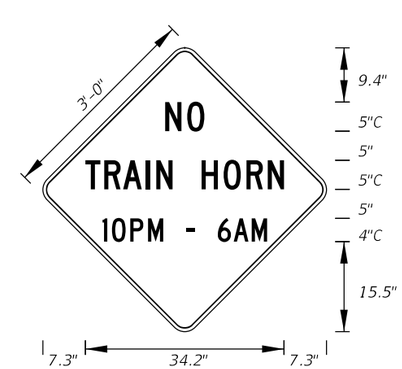

FTP-62-06
3' X 3'
2" Radii ¾" Border 4"and 5" Series C Legend
Yellow Background Black Legend and Border

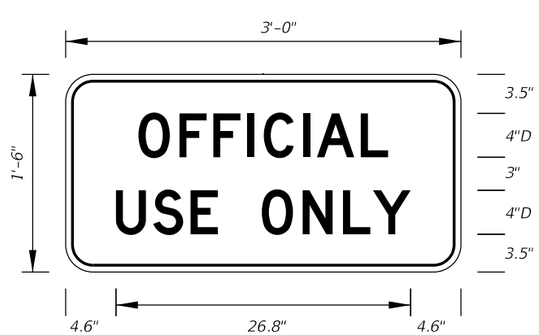

FTP-65-06
3' X 1'-6"
2" Radii ¾" Border
4" Series D Legend
White Background
Black Legend and Border

12/3/2015 11:45:10 AM

LAST REVISION	REVISION	DESCRIPTION:			INDEX NO.	SHEET NO.
07/01/14			FDOT FY 2016-17 DESIGN STANDARDS	SPECIAL SIGN DETAILS	17355	7 of 11

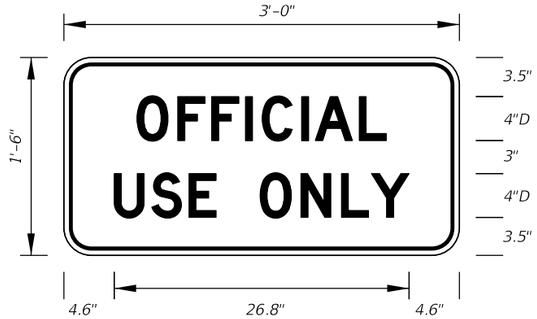

FTP-65-06
3' X 1'-6"
2" Radii ¾" Border
4" Series D Legend
White Background
Black Legend and Border

FTP-66-06
4'X 5'
2" Radii ¾" Border
7" Series D Legend
Blue Background
White Legend and Border

FTP-67-06
3' X 4'
2" Radii ¾" Border
5" Series D Legend
Blue Background
White Legend and Border

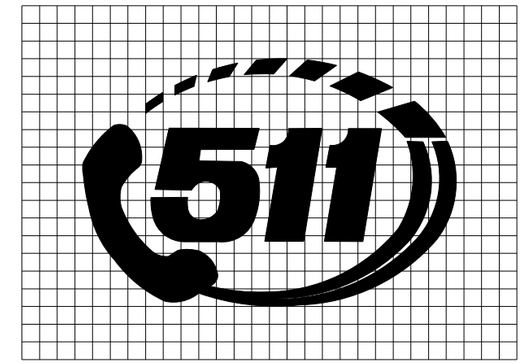

DETAIL for FTP-66 AND FTP-67

Sign Mounting Holes Can Be Punched Or Field Drilled With No Obstruction To Text Or Symbols From Holes Or Bolts.

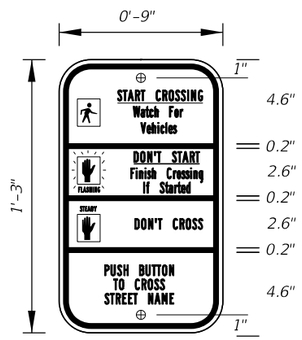

FTP-68A-06
9" X 1'-3"
1.5" Radii ¾" Border
Series B Legend
White Background
Black Legend and Border

See Standard Highway Signs Manual, Sign R10-3b For Letter Size Spacing And Symbol Sizes.

Sign Mounting Holes Can Be Punched Or Field Drilled With No Obstruction To Text Or Symbols From Holes Or Bolts.

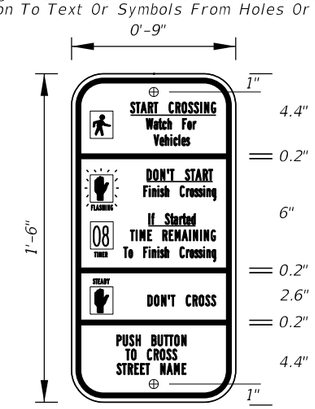

FTP-68B-06
9" X 1'-6"
1.5" Radii ¾" Border
Series B Legend
White Background
Black Legend and Border

See Standard Highway Signs Manual, Sign R10-3b For Letter Size Spacing And Symbol Sizes.

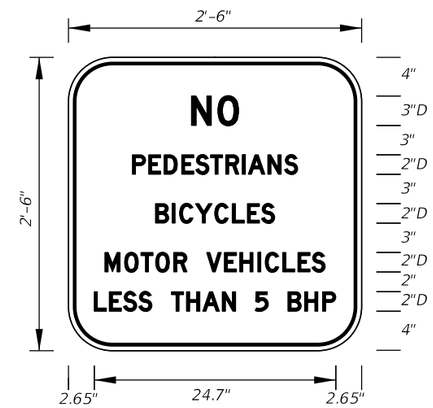

FTP-69-06
2'-6" X 2'-6"
4" Radii ¾" Border

2" and 3" Series D Legend
White Background
Black Legend and Border

FTP-70-06
3'-6" X 2'-6"
2.25" Radii ¾" Border
5" Series C and 7" Series C Legend
Blue Background
White Legend and Border

FTP-71-06
4' X 4'
2" Radii ¾" Border
8" Series C Legend
Yellow Background
Black Legend and Border

FTP-72-06
3' X 3'
2" Radii ¾" Border

6" Series C Legend
Yellow Background
Black Legend and Border

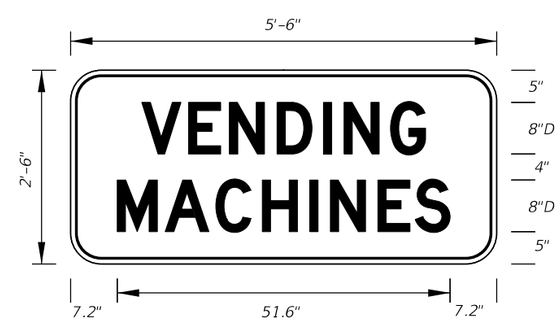

FTP-73-06
5'-6" X 2'-6"
4" Radii ¾" Border

8" Series D Legend
Blue Background
White Legend and Border

FTP-74-06
5'-6" X 2'-6"
4" Radii ¾" Border
6" Series D Legend
Blue Background
White Legend and Border

12/3/2015 11:45:11 AM

LAST REVISION	REVISION	DESCRIPTION:			INDEX NO.	SHEET NO.
07/01/14			FY 2016-17 DESIGN STANDARDS	SPECIAL SIGN DETAILS	17355	8 of 11

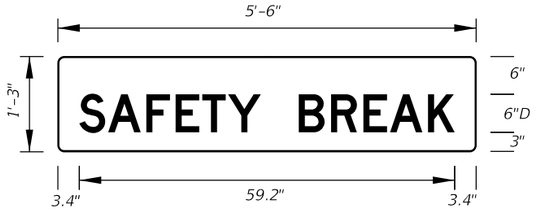

FTP-75-06
5'-6" X 1'-3"
1" Radii
6" Series D Legend
Blue Background
White Legend

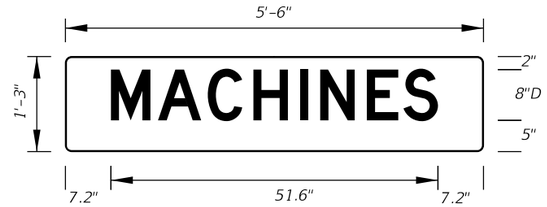

FTP-76-06
5'-6" X 1'-3"
1" Radii
8" Series D Legend
Blue Background
White Legend

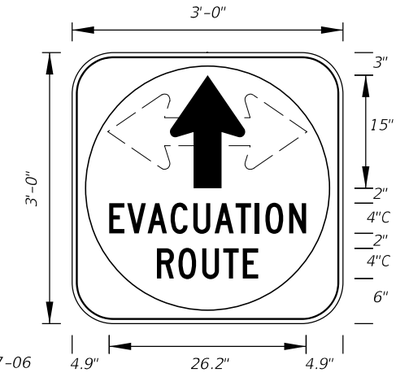

FTP-77-06
3' X 3'
5" Radii ¾" Border
4" Series C Legend
White Background with Blue Circle Background
White Legend and Black Border

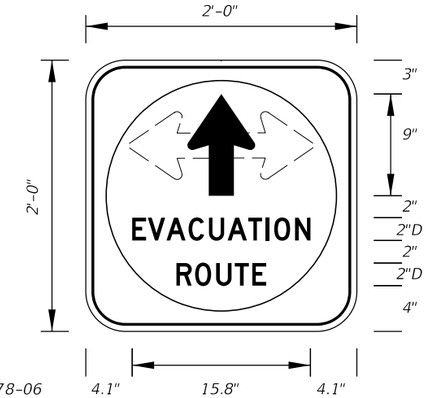

FTP-78-06
2' X 2'
3" Radii ¾" Border
2" Series D Legend
White Background with Blue Circle Background
White Legend and Black Border

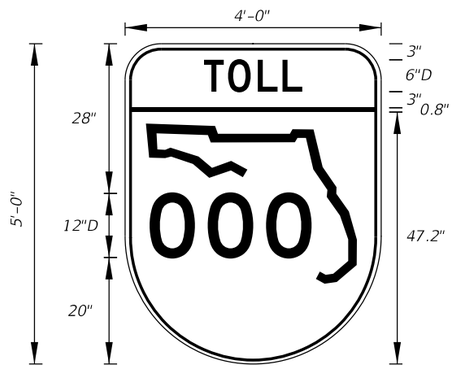

FTP-79-06
4' X 5'
6" Radii ¾" Border
6" and 12" Series D Legend
Top Yellow Background with Black Legend and Black Border
Bottom White Background with Black Legend and Border

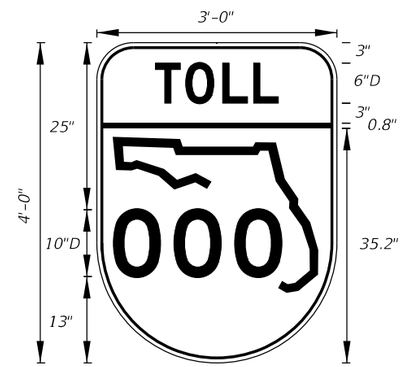

FTP-80-06
3' X 4'
5" Radii ¾" Border
6"and 10" Series D Legend
Top Yellow Background with Black Legend and Black Border
Bottom White Background with Black Legend and Border

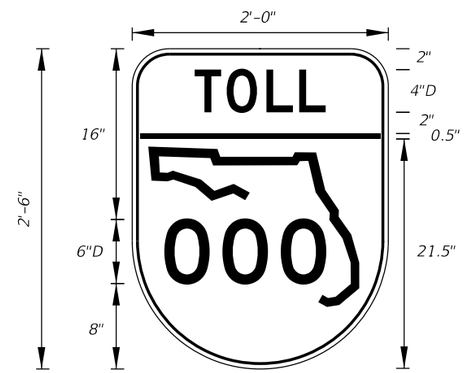

FTP-81-06
2' X 2'-6"
3" Radii ¾" Border
4" and 6" Series D Legend
Top Yellow Background with Black Legend and Black Border
Bottom White Background with Black Legend and Border

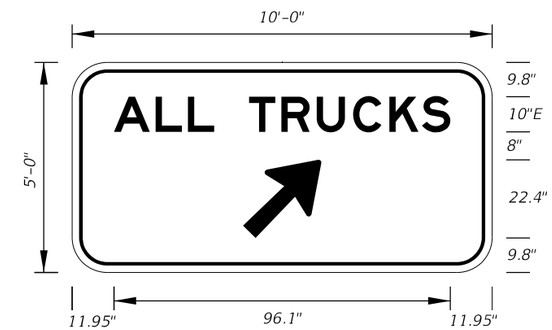

FTP-83-08
10'-0" X 5'-0"
8" Radii

10" Series E Legend
Green Background
White Legend

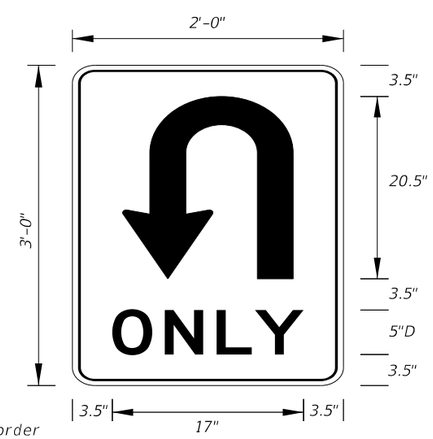

FTP-82-08
2' X 3'
1.5" Radii
5" Series D Legend
White Background
Black Legend and Border

ARROW HEAD

A	3.125
B	3.625
C	6.375
D	.5
E	.625

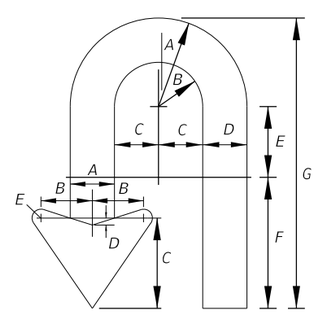

ARROW BODY

A	B	C	D	E	F	G
6.25	3.125	3.125	3.125	5	9.25	20.5

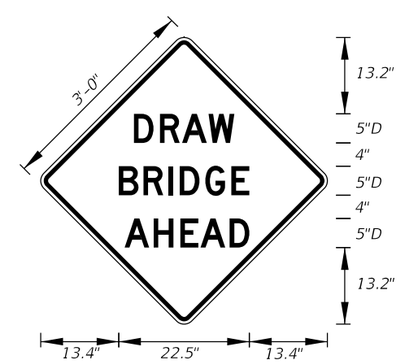

FTP-84-09
3' X 3'
1.5" Radii

5" Series D Legend
Yellow Background
Black Legend

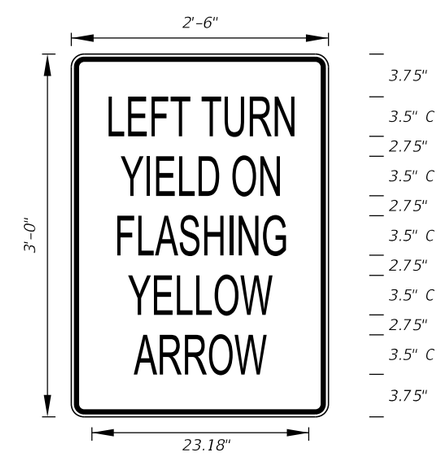

FTP-85-13
3' X 2'-6"
1.875" Radii ¾" Border

3.5" Series C Legend
White Background
Black Legend and Border

12/3/2015 11:45:12 AM

LAST REVISION	REVISION	DESCRIPTION:				
07/01/14			FY 2016-17 DESIGN STANDARDS	SPECIAL SIGN DETAILS	INDEX NO. 17355	SHEET NO. 9 of 11

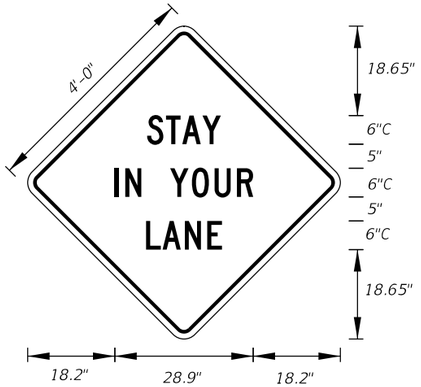

MOT-1-06
4' X 4'
2" Radii ¾" Border

6" Series C Legend
Orange Background
Black Legend and Border

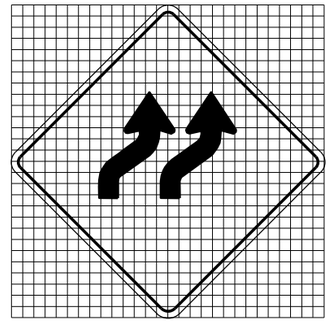

MOT-2-06
4' X 4'
2" Radii ¾" Border

Orange Background
Black Arrows and Border

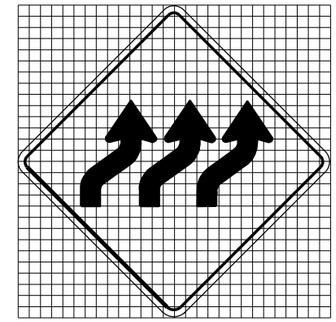

MOT-3-06
4' X 4'
2" Radii ¾" Border

Orange Background
Black Arrows and Border

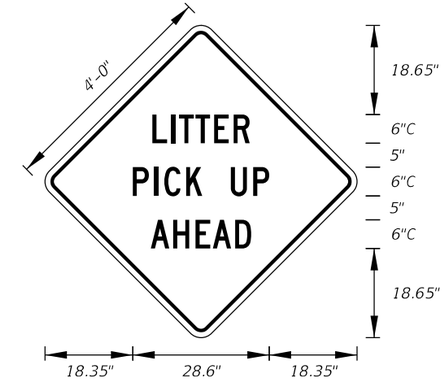

MOT-4-06
4' X 4'
2" Radii ¾" Border

6" Series C Legend
Orange Background
Black Legend and Border

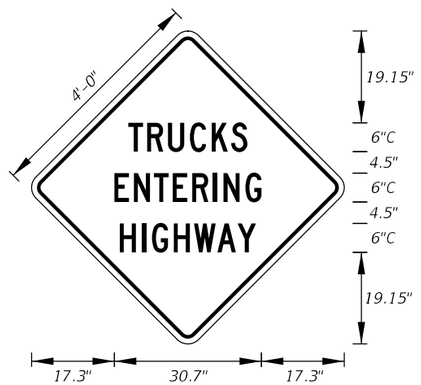

MOT-5-06
4' X 4'
2" Radii ¾" Border

6" Series C Legend
Orange Background
Black Legend and Border

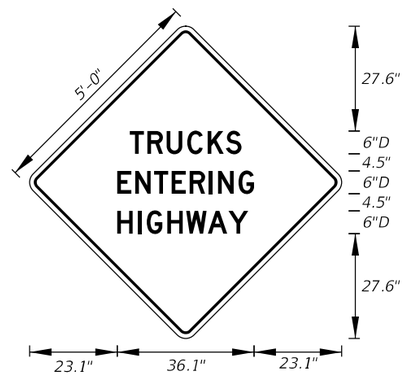

MOT-6-06
5' X 5'
2" Radii ¾" Border

6" Series D Legend
Orange Background
Black Legend and Border

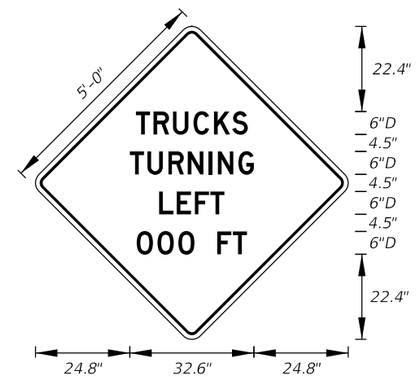

MOT-7-06
5' X 5'
2" Radii ¾" Border

6" Series D Legend
Orange Background
Black Legend and Border

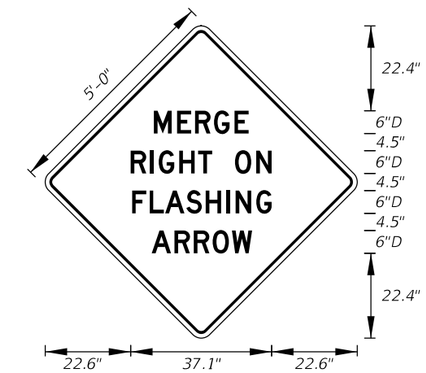

MOT-8-06
5' X 5'
2" Radii ¾" Border

6" Series D Legend
Orange Background
Black Legend and Border

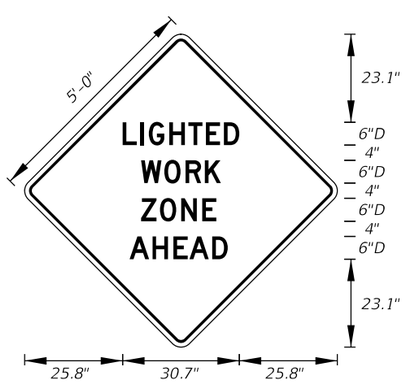

MOT-9-06
5' X 5'
2" Radii ¾" Border

6" Series D Legend
Orange Background
Black Legend and Border

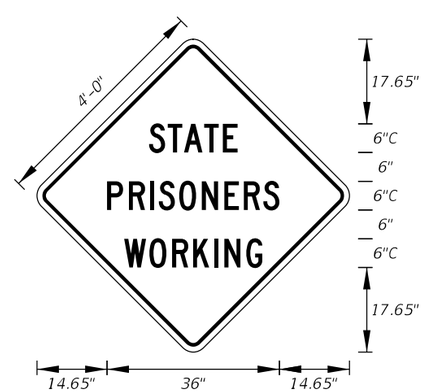

MOT-10-06
4' X 4'
2" Radii ¾" Border

6" Series C Legend
Orange Background
Black Legend and Border

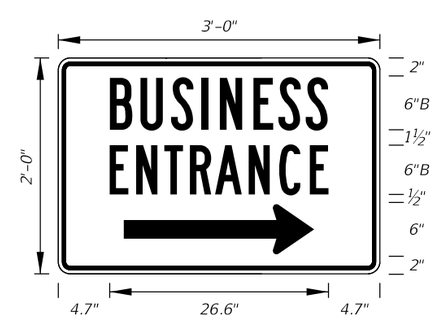

MOT-11-06
3' X 2'
2" Radii ¾" Border

6" Series B Legend
Blue Background
White Legend and Border

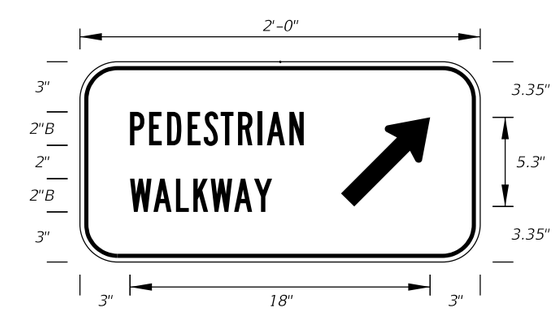

MOT-12-06
2' X 1'
2" Radii ¾" Border

2" Series B Legend
White Background
Black Legend and Border

12/3/2015 11:45:13 AM

LAST REVISION	REVISION	DESCRIPTION:			INDEX NO.	SHEET NO.
07/01/14			FDOT FY 2016-17 DESIGN STANDARDS	SPECIAL SIGN DETAILS	17355	10 of 11

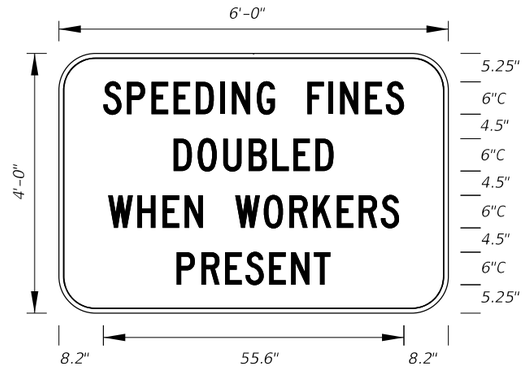

MOT-13-06 Freeway Sign
6' X 4'
6" Radii ¾" Border

6" Series C Legend
White Background
Black Legend and Border

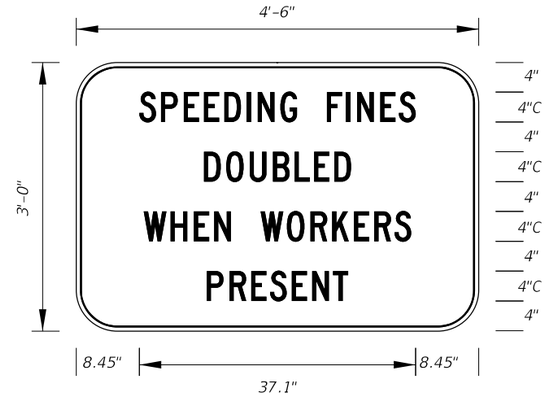

MOT-14-06 Arterial Sign
4'-6" X 3'
5" Radii ¾" Border

4" Series C Legend
White Background
Black Legend and Border

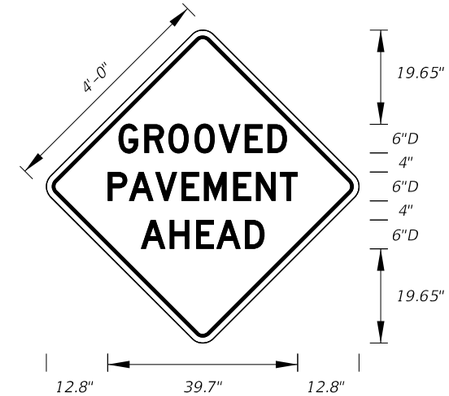

MOT-15-06
4' X 4'
2" Radii ¾" Border

6" Series D Legend
Orange Background
Black Legend and Border

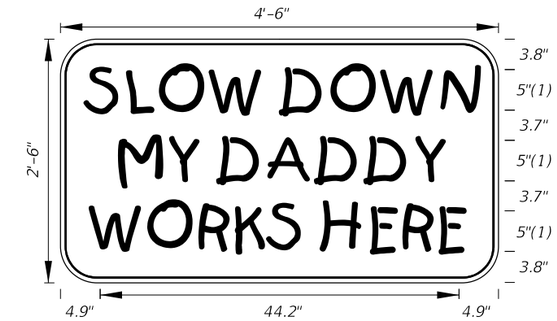

MOT-16-06
4'-6" X 2'-6"
4" Radii ¾" Border

5" Kids Series Legend
Orange Background
Black Legend and Border

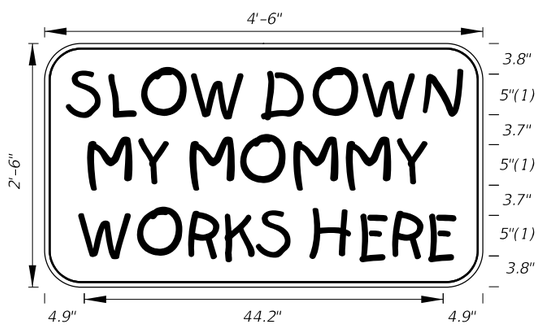

MOT-17-06
4'-6" X 2'-6"
4" Radii ¾" Border

5" Kids Series Legend
Orange Background
Black Legend and Border

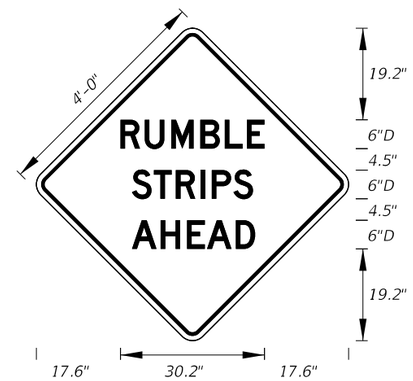

MOT-18-10
4' X 4'
2" Radii ¾" Border

6" Series D Legend
Orange Background
Black Legend and Border

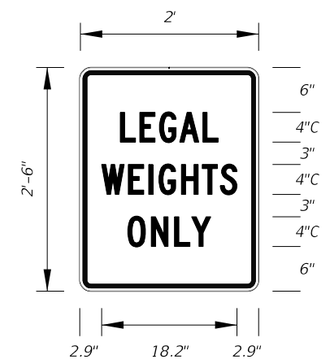

MOT-19-11
2' X 2'-6"
1.13" Radii ¾" Border

4" Series C Legend
White Background
Red Legend and Border

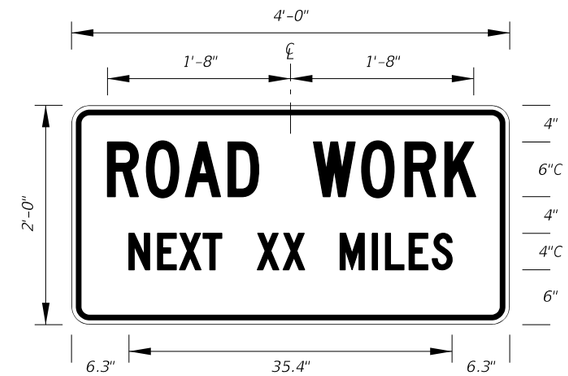

G20-1
2' X 4'
1.5" Radii ¾" Border

Orange Background
Black Legend and Border

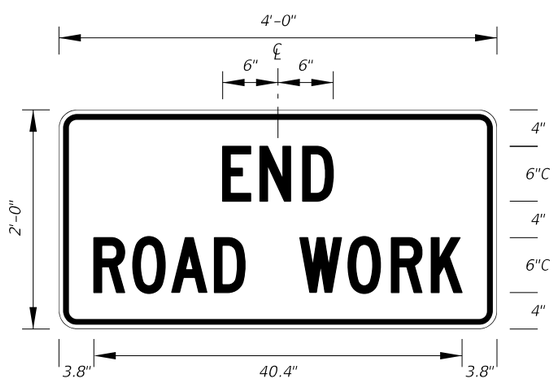

G20-2
2' X 4'
1.5" Radii ¾" Border

Orange Background
Black Legend and Border

11:45:14 AM

12/3/2015

LAST REVISION	REVISION	DESCRIPTION:			INDEX NO.	SHEET NO.
07/01/14			FDOT FY 2016-17 DESIGN STANDARDS	SPECIAL SIGN DETAILS	17355	11 of 11

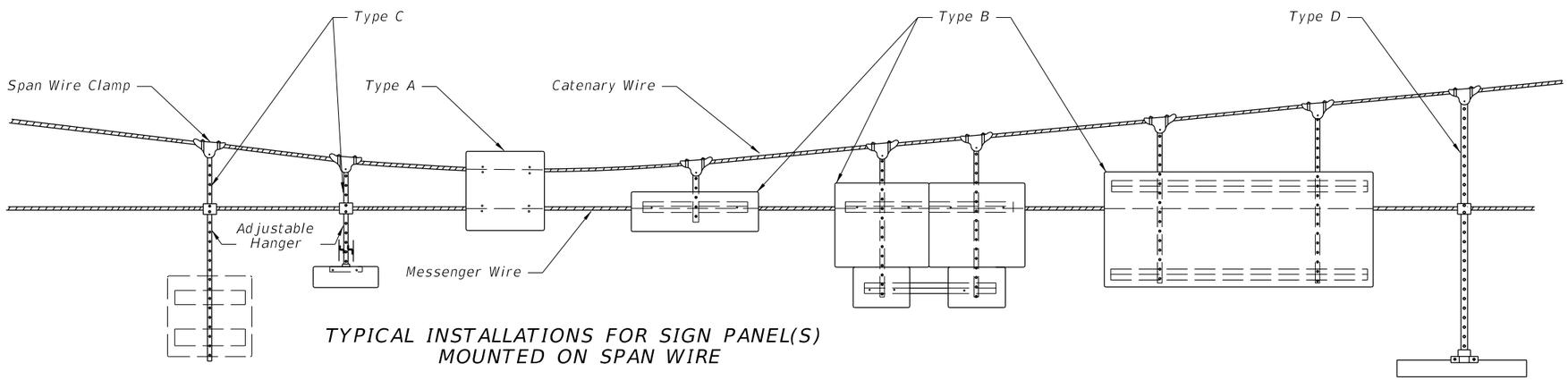

TYPICAL INSTALLATIONS FOR SIGN PANEL(S) MOUNTED ON SPAN WIRE

Notes:

1. Bottom edge of signs shall be approximately at the same elevation.
2. Type B & C attachments with one hanger shall have wind beams for signs wider than 3½'. The beams shall extend to within 6" of the sign edge.
3. Type B & C attachments for signs 4' and wider shall have 2 hangers. Signs 7' and wider shall have wind beams that extend to within 6" of the sign edge.
4. Type D attachments shall be for signs 3½' wide or less.
5. Sign panels shall meet the requirements of Index 11200.
6. Refer to section 634 of the Standard Specifications For Road And Bridge Construction.
7. All bolts, nuts, and washers shall be passivated stainless steel, AISI 300 series, commercial grade, type 316.

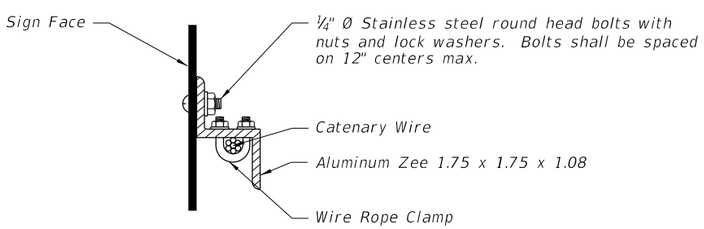

SIGN MOUNTING DETAIL

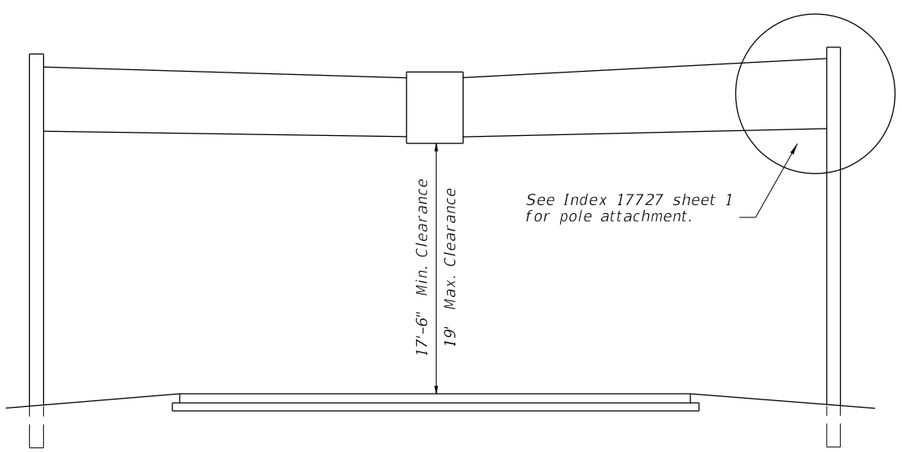

TYPICAL SPAN WIRE INSTALLATION

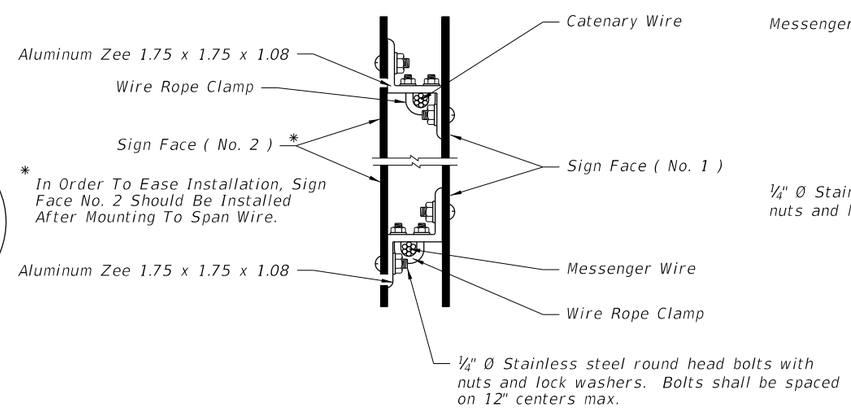

The overlapped connection of adjustable hangers shall use a minimum of 2 bolts with a minimum spaceing between bolts of 2".

DETAIL OF OPPOSING SIGNS SPAN WIRE MOUNTED

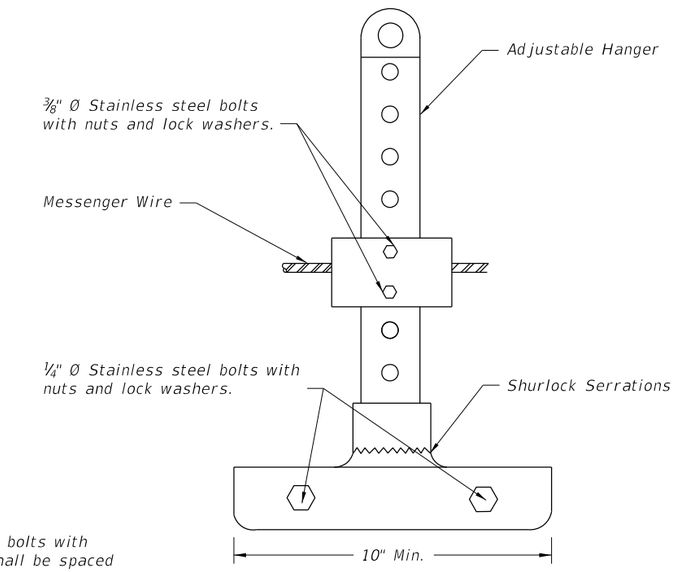

ADJUSTABLE HANGER FOR SIGN MOUNTING

TWO POINT ATTACHMENT

LAST REVISION	REVISION	DESCRIPTION:	FDOT FY 2016-17 DESIGN STANDARDS	SPAN WIRE MOUNTED SIGN DETAILS	INDEX NO.	SHEET NO.
07/01/09					17356	1 of 1

12/3/2015 11:45:14 AM

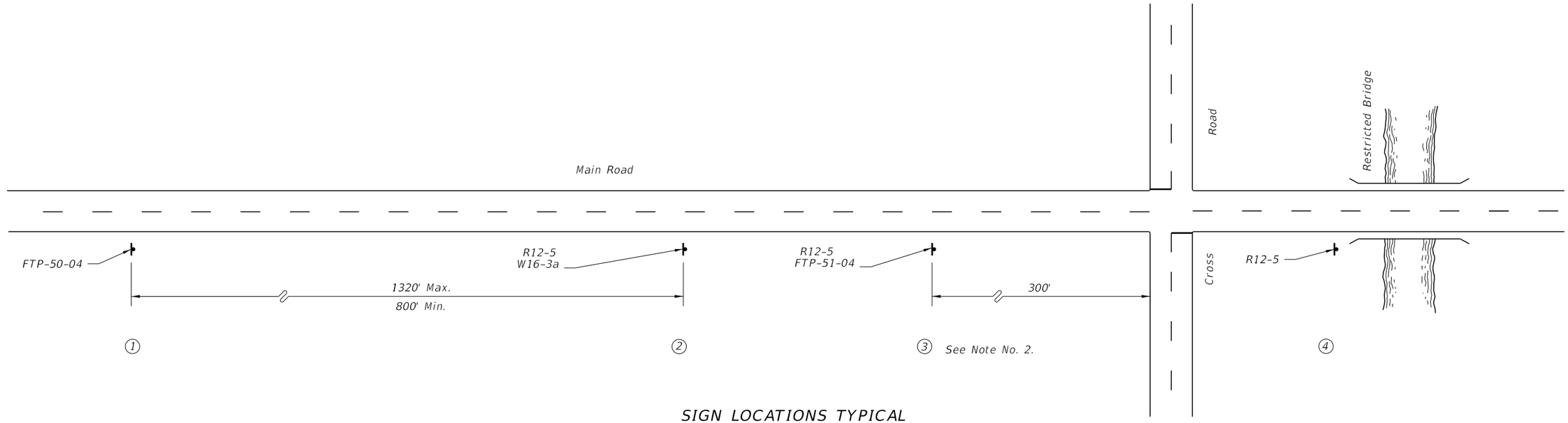

SIGN LOCATIONS TYPICAL

1

WEIGHT LIMIT
RESTRICTION AHEAD

FTP-50-06

2

WEIGHT
LIMIT
8T
12T
16T

R12-5 (24" X 36")

X MILES

W 16-3A

3

WEIGHT
LIMIT
8T
12T
16T

R12-5 (24" X 36")

WEIGHT
LIMIT
LAST EXIT

FTP-51-06

4

WEIGHT
LIMIT
8T
12T
16T

R12-5 (24" X 36")

1. See Standard Highway Signs for sign R12-5 and W16-3 details.
2. Location of Sign No. 3 may require some field adjustment.
3. The Cross Road is the last detour to route around the restricted bridge.
4. Location of Sign No. 2 should be established from the Cross Road the following approximate distances; Interstate-1 Mile Non- Interstate-1/2 Mile.
5. See Index 17355 for sign details.

12/3/2015 11:45:15 AM

LAST REVISION	REVISION	DESCRIPTION:			INDEX NO.	SHEET NO.
01/01/12			FY 2016-17 DESIGN STANDARDS	BRIDGE WEIGHT RESTRICTIONS	17357	1 of 1

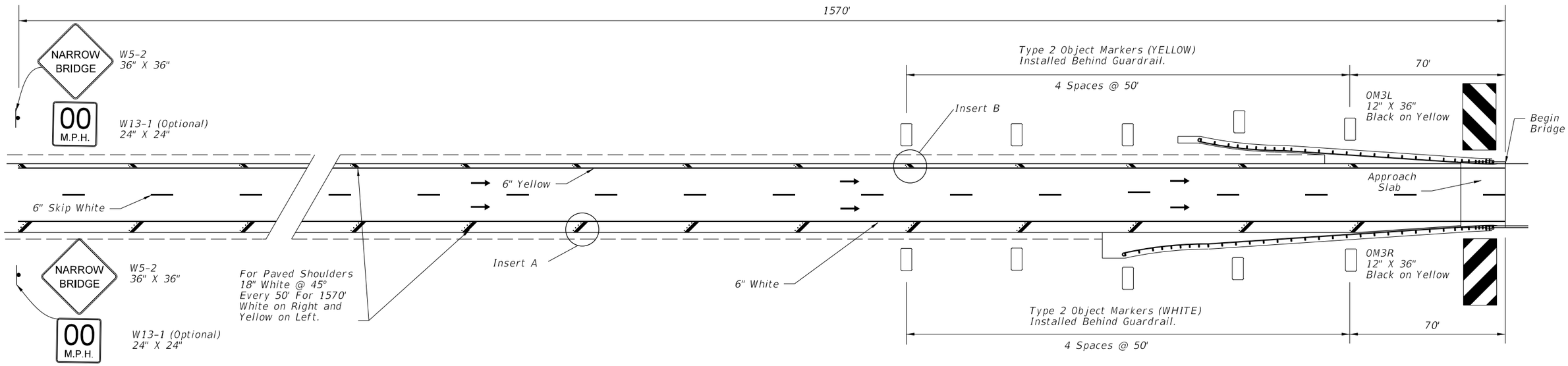

One-Way Traffic

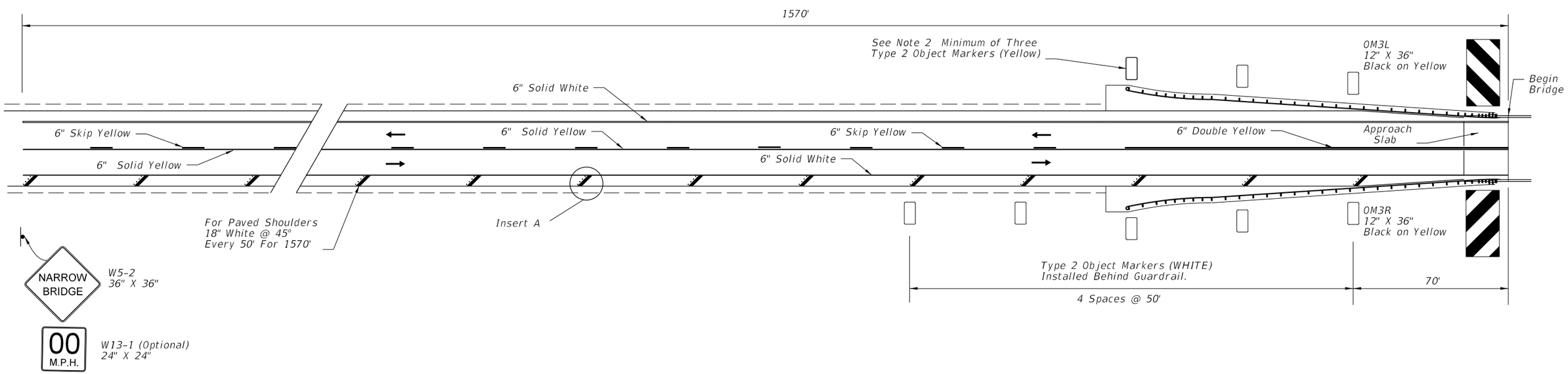

2-Way Traffic

12/3/2015 11:45:15 AM

LAST REVISION	REVISION	DESCRIPTION:			INDEX NO.	SHEET NO.
07/01/13			FDOT FY 2016-17 DESIGN STANDARDS	RURAL NARROW BRIDGE TREATMENT	17359	1 of 2

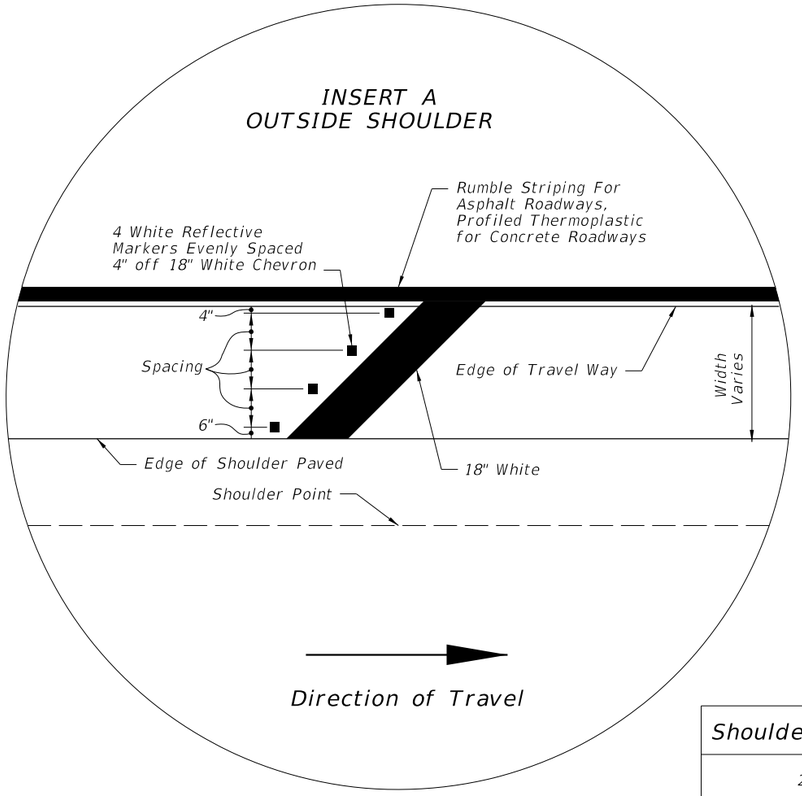

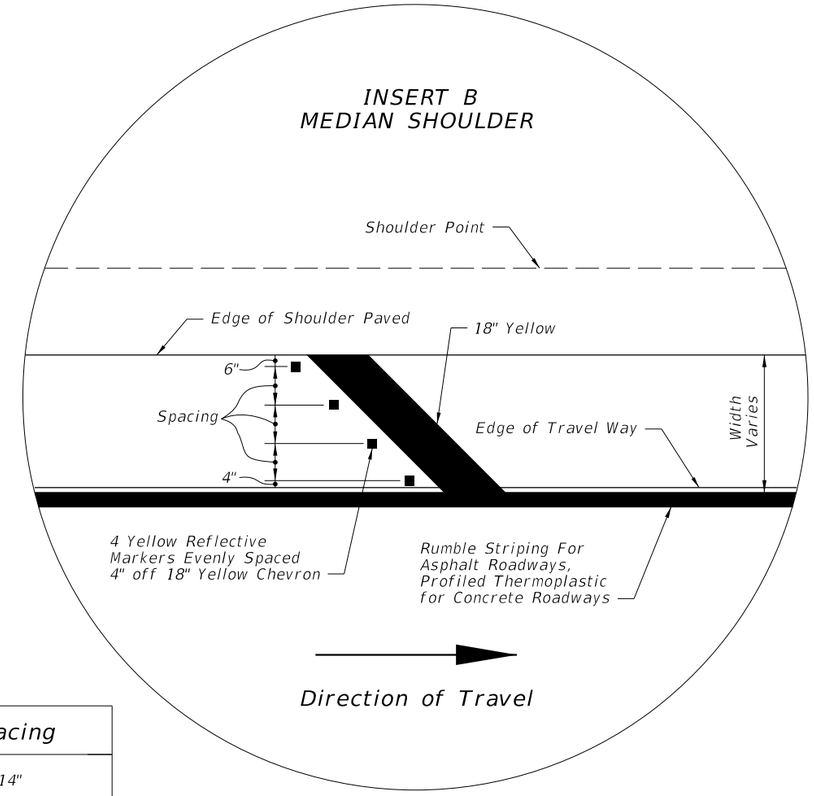

Shoulder Width	No. of RPM's	Spacing
2'	2	14"
3'	3	13"
4'	3	19"
5'	4	16.67"

NOTES:

1. Roadways with Two-Way Traffic:
   No passing zone should be extended 1570' in advance of narrow bridge.
2. If the bridge or the approach is on a curve, delineators shall be installed for a distance of 1570' in advance of narrow bridge on the outside portion of the roadway. Spacing shall be 100' between delineators. Delineators are to be placed not less than 2' or not more than 8' outside the outer edge of pavement.
3. Object markers and delineators on both sides of roadway shall face traffic approaching bridge
4. The OM-3R & OM-3L object markers shall be installed 4' above the roadway edge. The panels may be post mounted at the bridges.