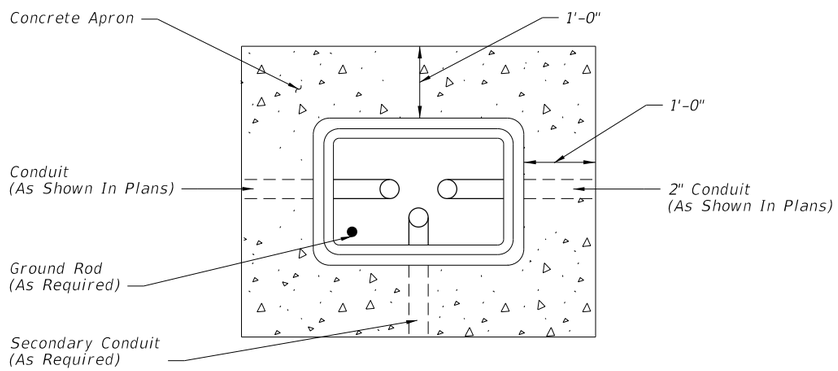

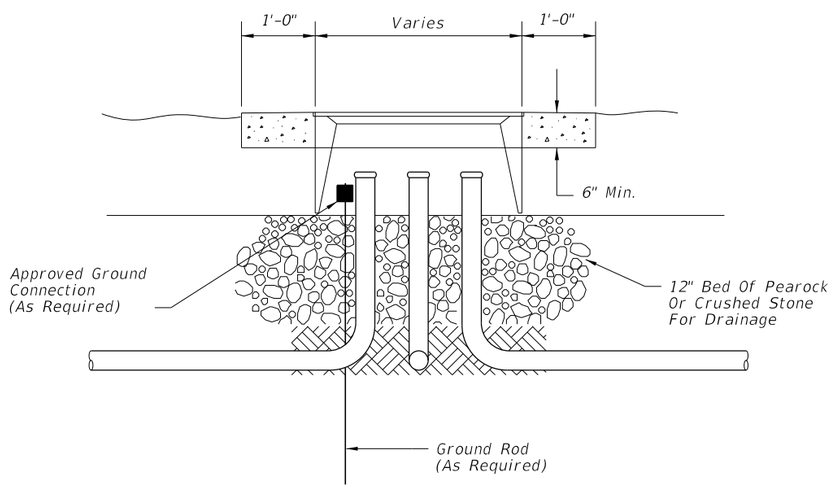

PULL BOX

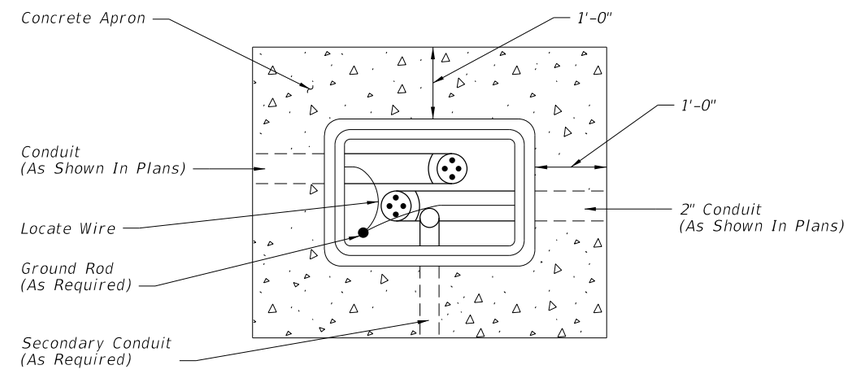

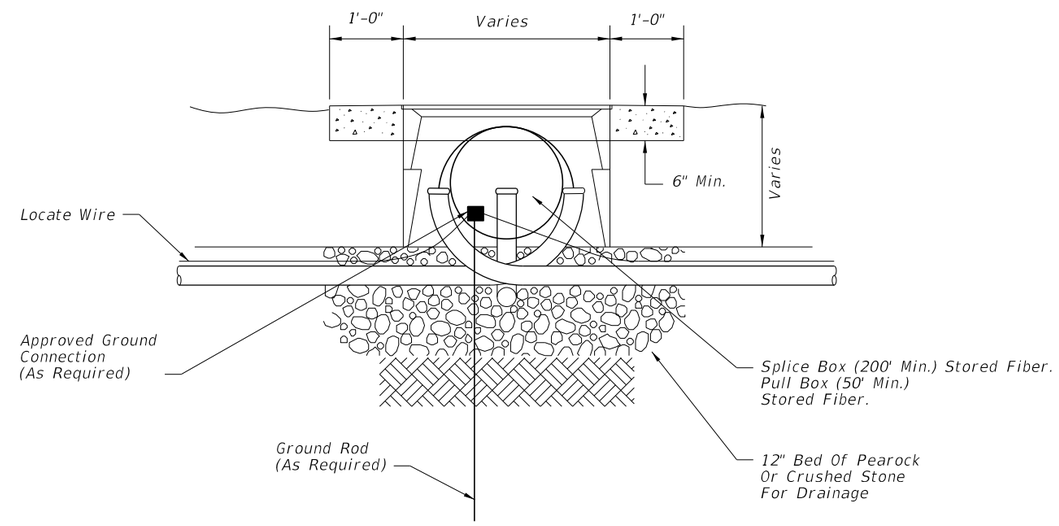

Rectangular boxes are depicted. Round fiber optic splice boxes and lids are allowed.

FIBER OPTIC BOX

1. Boxes shall not be installed in roadways or driveways.
2. Boxes shall be on the Approved Product List (APL).
3. Boxes shall be installed flush with the finished grade surface.
4. Fiber Optic splice boxes shall be provided with cable hanger racks designed to support cables and splice enclosures. Cost of racks to be included in cost of splice box.
5. Fiber optic boxes shall contain only Fiber Optic Cable, Conduit, and Locate Wire.
6. Conduit center line shall be aligned to top edge of box to facilitate cable pulling.
7. All boxes shall have 1'-0" wide (min) concrete apron. Concrete for concrete aprons shall be Class NS with a minimum strength at 28 days of f'c=2.5 Ksi. Aprons shall be sloped away from box. Cost of apron to be included in the cost of each box.
8. Prevent the ingress of Water, Dirt, Sand, and other foreign materials into the conduit prior to, during and after construction using a foam-sealing material, rubber plug, or other device designed for this application and approved.

6/10/2015 9:55:55 AM

LAST REVISION	REVISION	DESCRIPTION:			INDEX NO.	SHEET NO.
07/01/13			FDOT 2016 DESIGN STANDARDS	PULL AND SPLICE BOX	17700	1 of 1

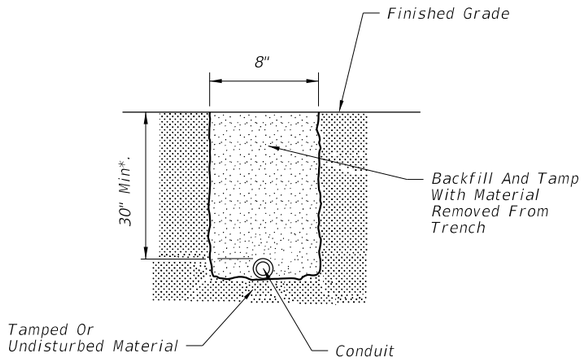

FOR USE IN AREAS NOT EXPOSED TO VEHICULAR TRAFFIC

FIGURE A

Note:
1. Sidewalk patches to match existing joints.
2. Entire sidewalk slab must be replaced when specified in the plans.
3. Backfill and tamp with material from trench except at driveways. At driveways, backfill a length of trench within the driveway entirely with Flowable Fill.

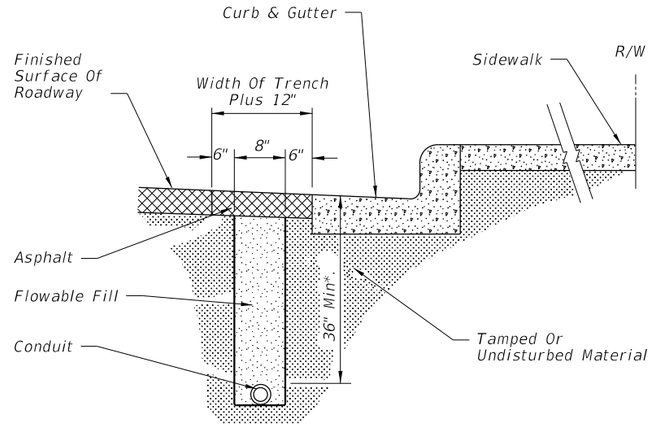

FOR USE IN ASPHALT ROADWAY ADJACENT TO GUTTER WHEN PLACEMENT OUTSIDE OF THE PAVEMENT IS NOT FEASIBLE.

FIGURE B

Note:
1. Trench not to be open more than 250' at a time when construction area is subject to vehicular or pedestrian traffic.
2. Asphalt to be sawcut to leave neat lines at the pavement cut.
3. See note 3 Figure C.

*May be adjusted due to field conditions upon approval of project engineer.

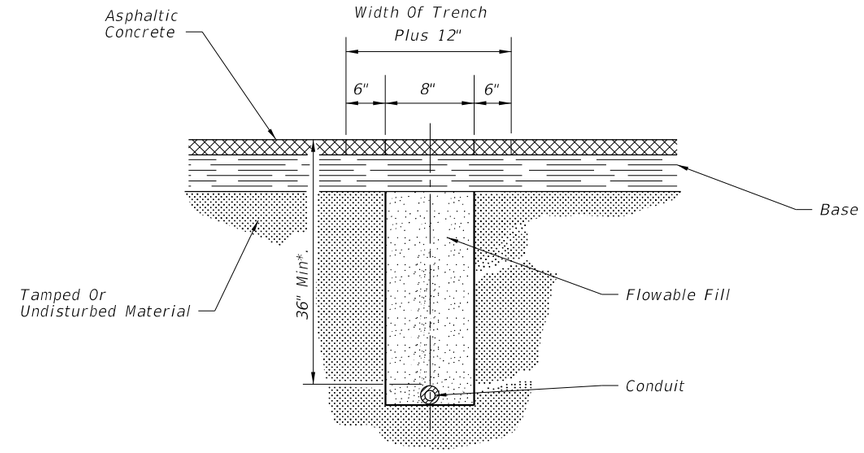

FOR USE IN INSTALLING CONDUIT UNDER EXISTING ASPHALT PAVEMENT NOT ADJACENT TO GUTTER WHEN JACKING OR DIRECT BORING IS NOT FEASIBLE.

FIGURE C

Note:
1. Rigid conduit must be used when jacking under existing pavement at 36" minimum depth.
2. Asphalt to be sawcut at the edges of the trench.
3. The removal and replacement of the additional pavement width (6") will not be required when the trench can be constructed without disturbing the asphalt surface on either side.

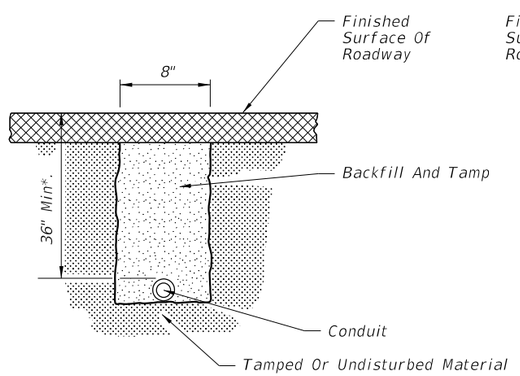

FOR USE INSTALLING CONDUIT UNDER A NEW ROADWAY PRIOR TO INSTALLATION OF BASE AND PAVEMENT

FIGURE D

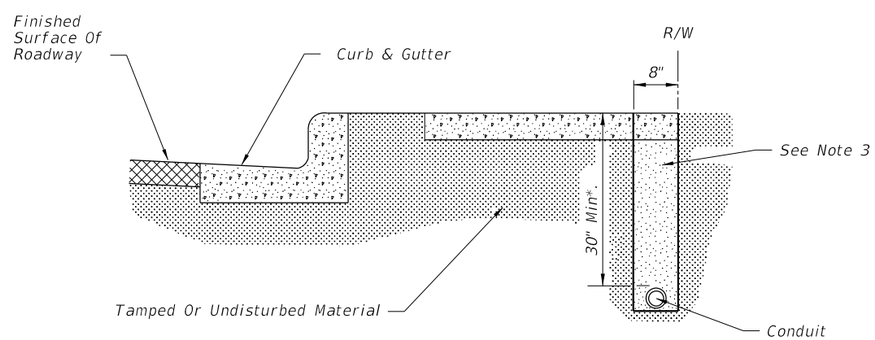

FOR USE IN INSTALLING CONDUIT UNDER SIDEWALK

FIGURE E

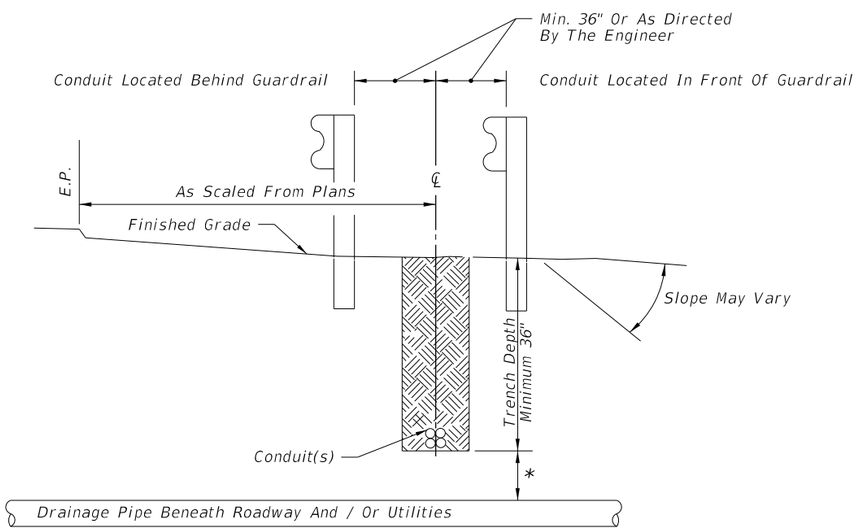

* Maintain 12" Minimum Vertical Clearance When Crossing Over Pipe And / Or Utilities. If Minimum Vertical Clearance Cannot Be Maintained, Then Conduit Is To Be Routed Under Pipe Maintaining 12" Minimum Vertical Clearance.

FIGURE F

6/10/2015 9:56:19 AM

LAST REVISION	REVISION	DESCRIPTION:			INDEX NO.	SHEET NO.
07/01/13			FDOT 2016 DESIGN STANDARDS	CONDUIT INSTALLATION DETAILS	17721	1 of 2

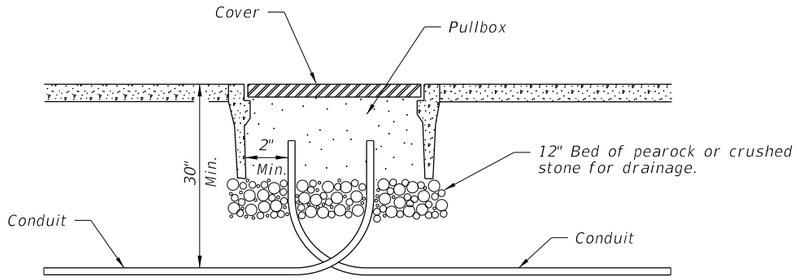

PULLBOX ENTRY OF CONDUIT UNDER SIDEWALKS

FIGURE A

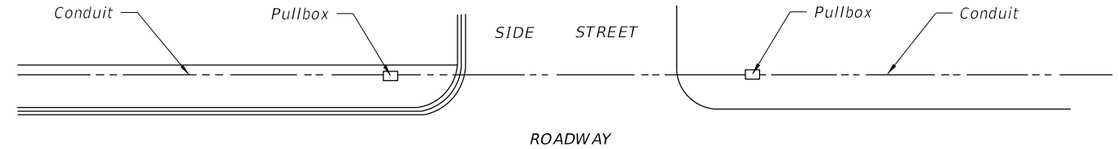

PLAN

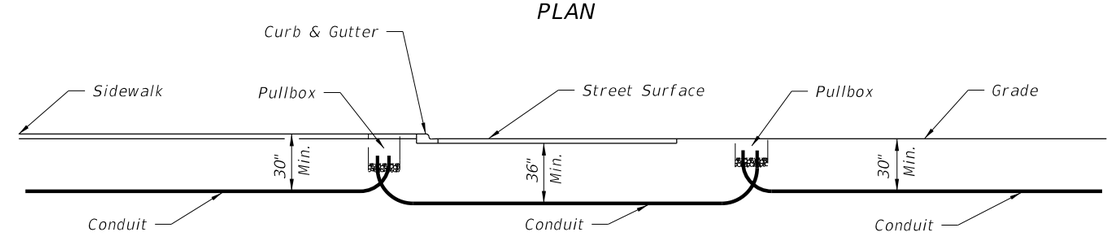

UNDER SIDEWALK

UNDER ROADWAY

UNDER NONTRAFFIC BEARING SURFACE

SECTION

FIGURE B

FIGURE C

FOR USE UNDER RAILROADS

Note:
Ends of conduit shall be sealed in accordance with Section 630 of the Standard Specifications for Road and Bridge Construction.

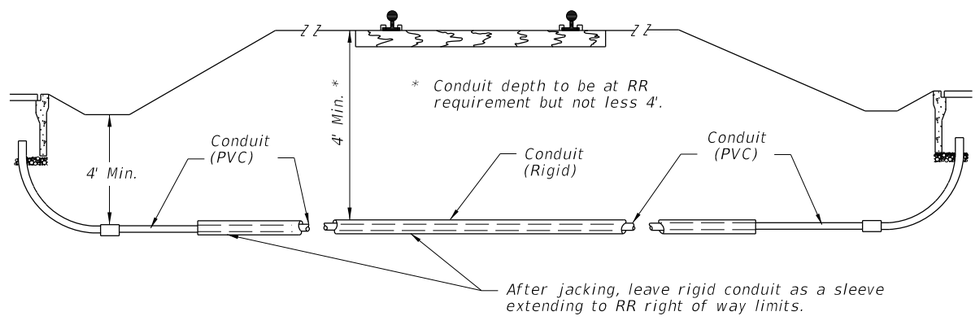

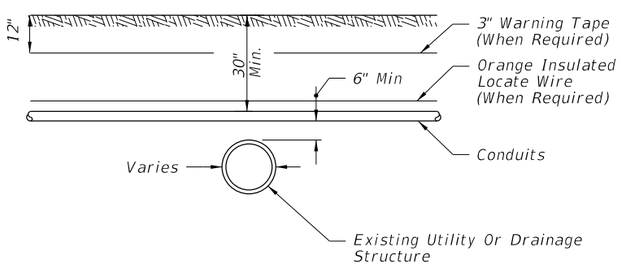

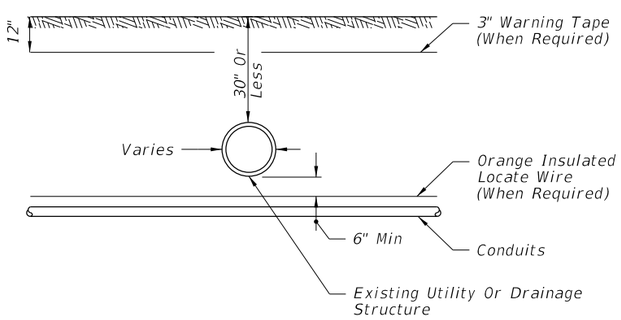

CONDUIT INSTALLATION DETAILS ACROSS EXISTING DRAIN PIPES OR UTILITIES

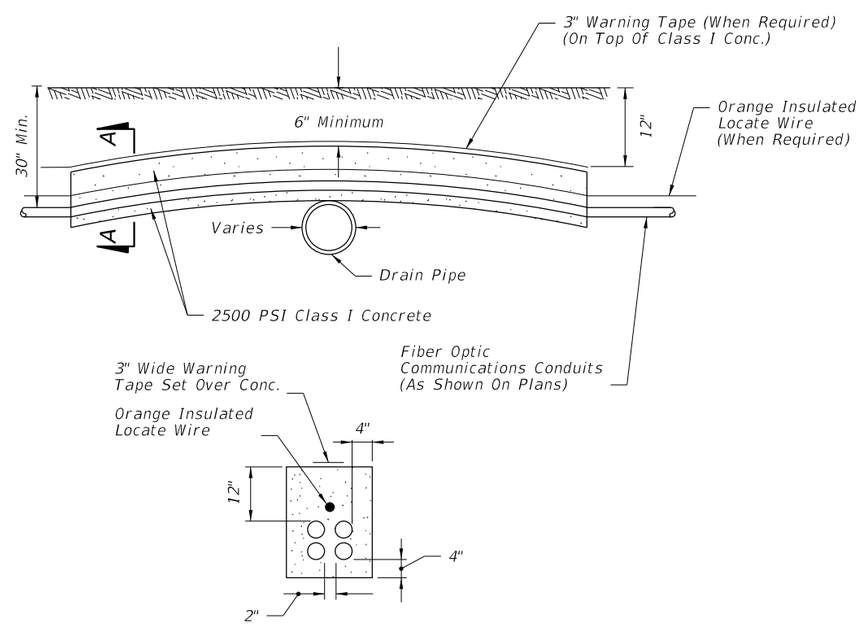

SECTION AA

GENERAL NOTES:

1. The contractor, with approval from the Engineer, may adjust the final burial depth of the conduit(s) in order to transverse nonmovable object conflicts.
2. Backfill with excavated material and compact the soil until firm and unyielding. Remove rock and debris from backfill material.
3. Where conduits are to be installed over existing underground structures (e.g., drain pipes or utility lines) which are less than 30" deep, the contractor shall encase the conduit in 2500 PSI Class I concrete for the entire length of conduit that is installed at a depth of less than 30".
4. If the amount of cover over the encasement is less than 6", the contractor shall install the conduit to pass below the underground structures (e.g., drain pipes).

6/10/2015 9:56:20 AM

LAST REVISION	REVISION	DESCRIPTION:			INDEX NO.	SHEET NO.
07/01/14			FDOT 2016 DESIGN STANDARDS	CONDUIT INSTALLATION DETAILS	17721	2 of 2

NOTES:

1. Work with Index 17727 for grounding and span wire details. See the Plans for clamp spacing, cable sizes and forces, signals and sign mounting locations and details.

2. Shop Drawings: This Index is considered fully detailed, only submit shop drawings for minor modifications not detailed in the Plans.

3. Materials: Split-lock washers and self-locking nuts are not permitted
   - A. Strain Pole and Backing Rings:
     - a. Less than 3/16": ASTM A1011 Grade 50, 55, 60 or 65
     - b. Greater than or equal to 3/16": ASTM A572 Grade 50, 55, 60 or 65
     - c. ASTM A595 Grade A (55 ksi yield) or Grade B (60 ksi yield)
   - B. Steel Plates: ASTM A36
   - C. Weld Metal: E70XX
   - D. Bolts, Nuts and Washers:
     - a. High Strength Bolts: ASTM A325 Type 1
     - b. Nuts: ASTM A563 Grade DH Heavy-Hex
     - c. Washers: ASTM F436 Type 1, one under turned element
   - E. Anchor Bolts, Nuts and Washers:
     - a. Anchor Bolts: ASTM F1554 Grade 55
     - b. Nuts: ASTM A563 Grade A Heavy-Hex (5 per anchor bolt)
     - c. Plate Washers: ASTM A36 (2 per bolt)
   - F. Handhole Frame: ASTM A709 or ASTM A36, Grade 36
   - G. Handhole Cover: ASTM A1011 Grade 50, 55, 60 or 65
   - H. Aluminum Pole Caps and Nut Covers: ASTM B26 (319-F)
   - I. Stainless Steel Screws: AISI Type 316
   - J. Threaded Bars/Studs: ASTM A36 or ASTM A307
   - K. Concrete: Class IV (Drilled Shaft) for all environmental classifications.
   - L. Reinforcing Steel: Specification Section 415

4. Fabrication:
   - A. Pole Taper: Change diameter at a rate of 0.14 inches per foot.
   - B. Upright splices are not allowed. Transverse welds are only permitted at the base.
   - C. Provide bolt hole diameters as follows:
     - a. Bolts (except Anchor Bolts): Bolt diameter plus 1/16", prior to galvanizing.
     - b. Anchor Bolts: Bolt diameter plus 1/2", maximum.
   - D. Locate handhole 180° from 2" wire entrance pipe.
   - E. Identification Tag: (Submit details for approval.)
     - a. 2"x 4" (Max.) aluminum identification tag.
     - b. Locate on the inside of the pole and visible from the handhole.
     - c. Secure to pole with 1/8" diameter stainless steel rivets or screws.
     - d. Include the following information on the ID Tag:
       1. Financial Project ID
       2. Pole Type
       3. Pole height
       4. Manufacturers' Name
       5. Fy of Steel
       6. Base Wall Thickness
   - F. Provide a 'J' or 'C' hook at the top of the pole for signal wiring support (See Sheet 3).
   - G. Perform all welding in accordance with Specification Section 460-6.4.
   - H. Hot Dip Galvanize after fabrication.

5. Coatings:
   - A. All Nuts, Bolts, Washers and Threaded Bars/Studs: ASTM F2329
   - B. All other steel items ASTM A123

6. Construction:
   - A. Foundation: Specification Section 455, except that payment is included in the cost of the strain pole.
   - B. After installation, place wire screen between top of foundation and bottom of baseplate in accordance with Specification Section 649-6.

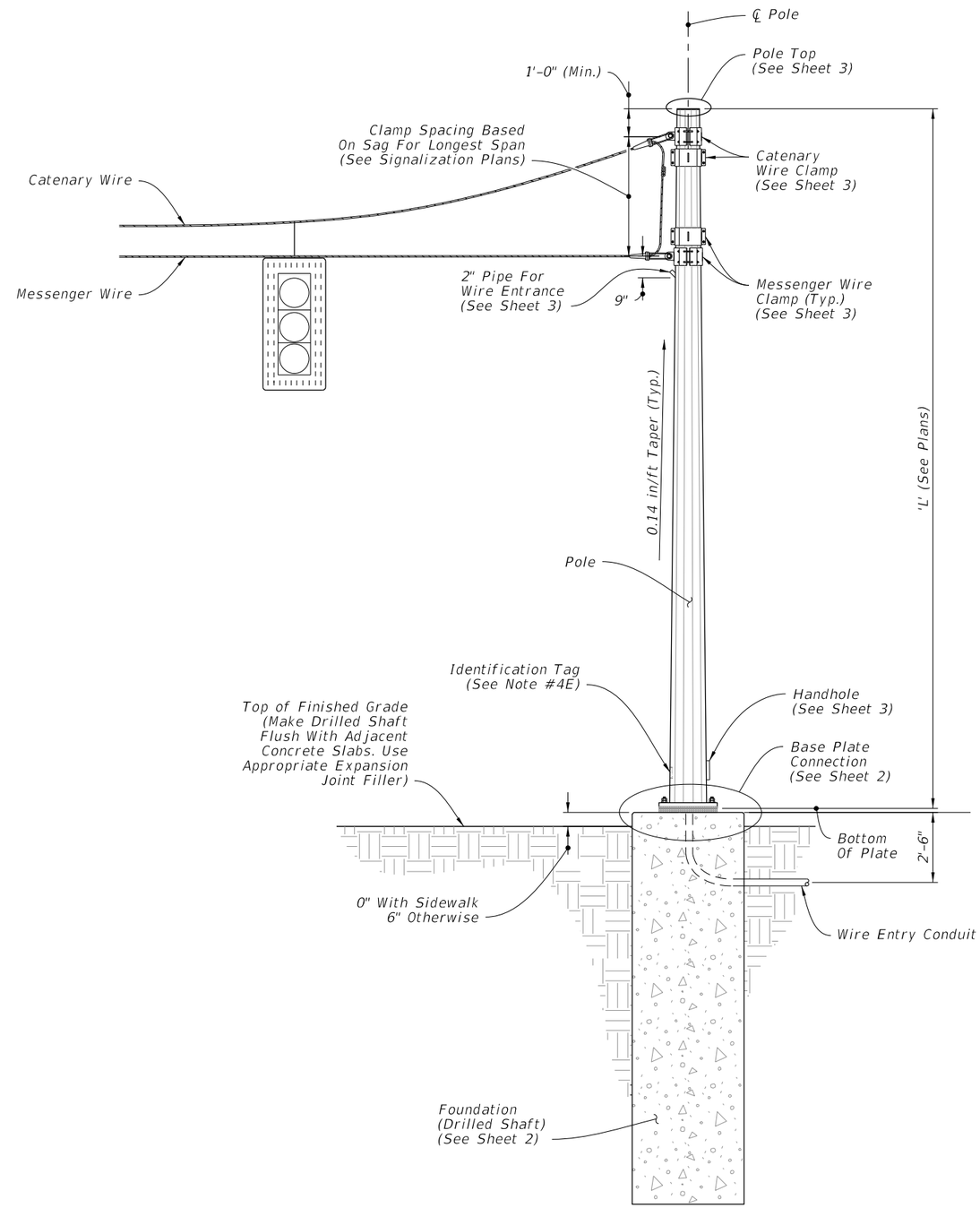

STRAIN POLE ASSEMBLY

ELEVATION AND NOTES

6/22/2015 2:52:45 PM

LAST REVISION	REVISION	DESCRIPTION:			INDEX NO.	SHEET NO.
07/01/15			FDOT 2016 DESIGN STANDARDS	STEEL STRAIN POLE	17723	1 of 3

TABLE OF STRAIN POLE VARIABLES											
POLE TYPE	MAXIMUM ALLOWABLE MOMENT (kip-ft)	POLE		BASE CONNECTION					SHAFT		
		J (in)	K (in)	No. of Bolts	BA (in)	BB (in)	BC (in)	BF (in)	DA (FT)	DB (FT)	No. of #11 Bars
PS-IV	95.4	0.250	14	8	25	2.50	1 3/8	60	14	4	14
PS-V	158.9	0.313	16	10	28	2.50	1 1/2	60	15	4	14
PS-VI	203.6	0.313	18	12	30	2.50	1 1/2	60	16	4	14
PS-VII	280.3	0.313	21	14	33	2.50	1 1/2	60	16	4.5	16
PS-VIII	338.0	0.313	23	16	35	2.50	1 1/2	60	17	4.5	16
PS-IX	400.9	0.313	25	12	39	3.00	1 3/4	60	17	5	18
PS-X	469.1	0.313	27	14	41	3.00	1 3/4	60	18	5	18

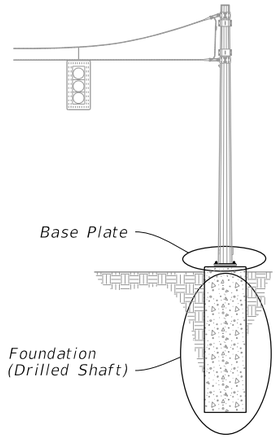

POLE ASSEMBLY

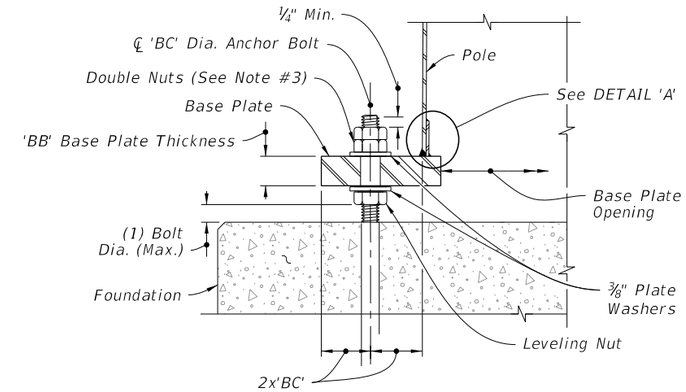

SECTION A-A

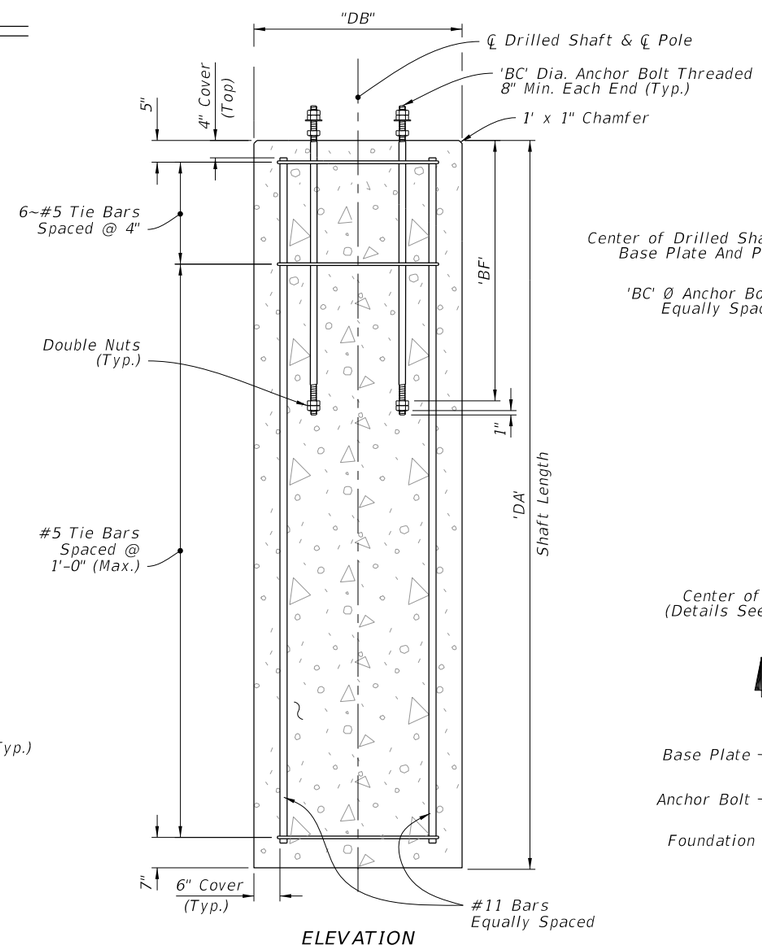

ELEVATION

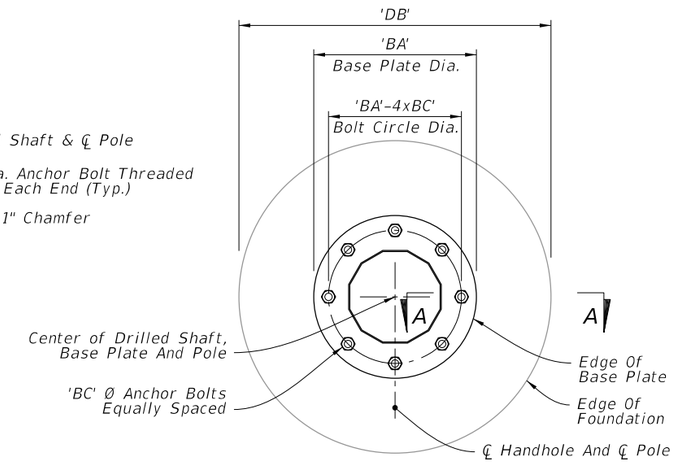

PLAN

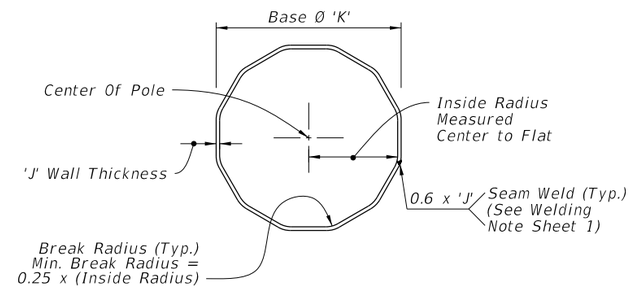

SECTION B-B

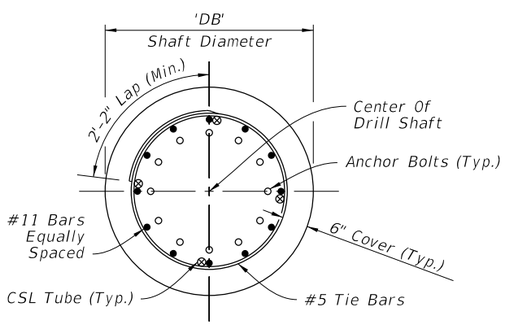

PLAN

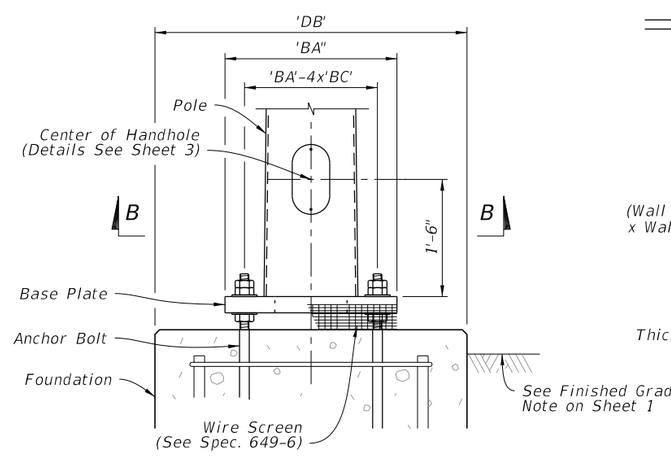

ELEVATION

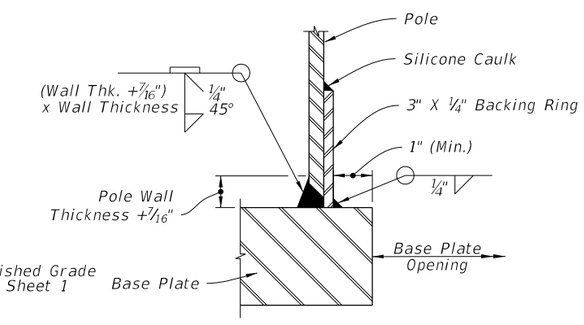

JOINT WELD DETAIL

FOUNDATION

BASE PLATE

DETAIL 'A'

FOUNDATON AND BASE DETAILS

6/22/2015 2:52:48 PM

LAST REVISION	REVISION	DESCRIPTION:			INDEX NO.	SHEET NO.
07/01/15			FDOT 2016 DESIGN STANDARDS	STEEL STRAIN POLE	17723	2 of 3

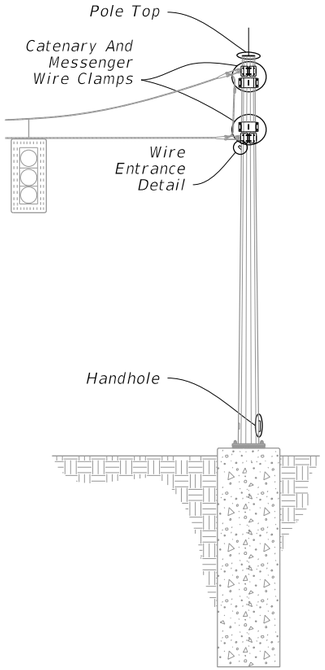

POLE ASSEMBLY

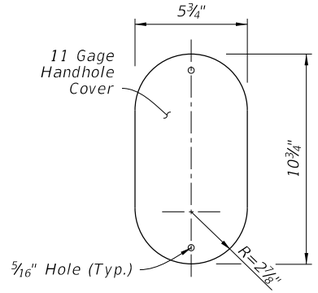

COVER

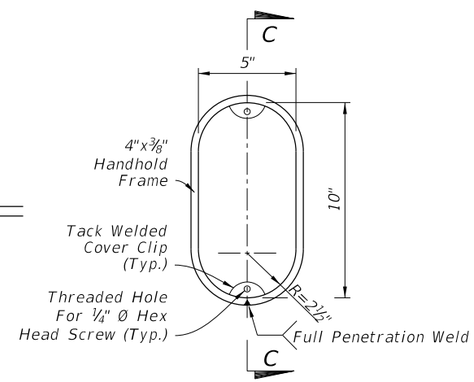

FRAME

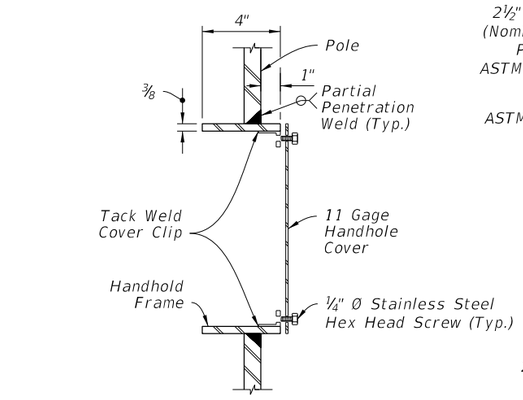

SECTION C-C

HANDHOLE

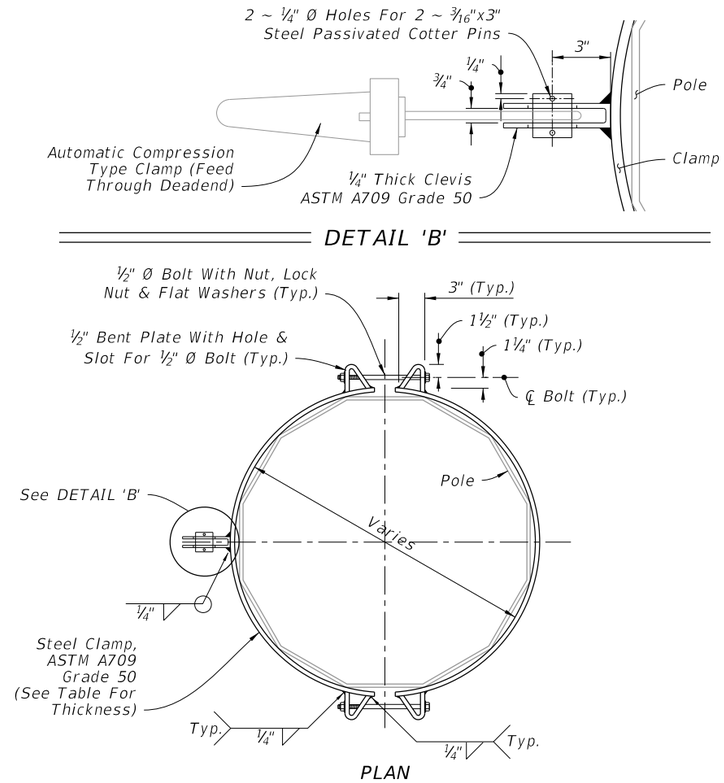

CATENARY AND MESSENGER WIRE CLAMPS

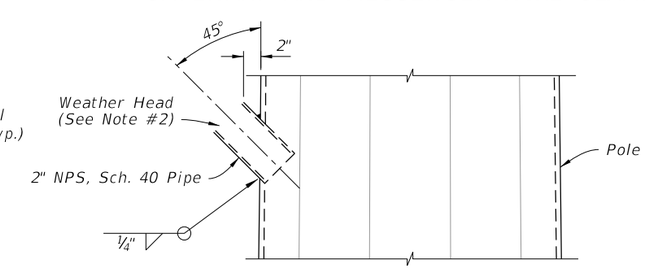

WIRE ENTRANCE DETAIL

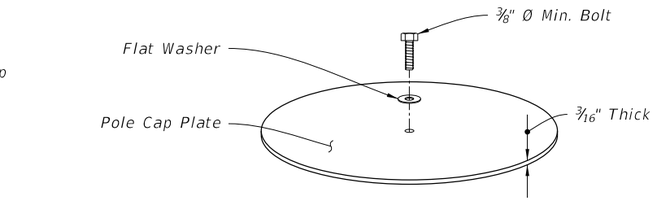

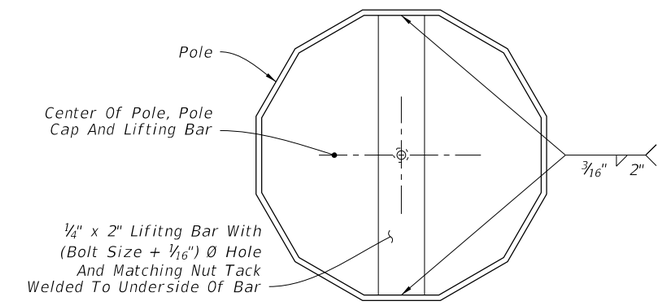

TOP VIEW

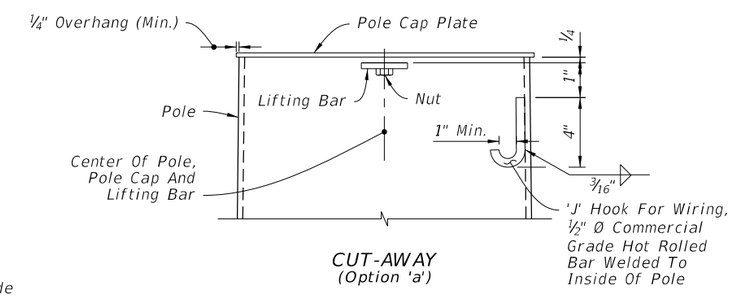

CUT-AWAY
(Option 'a')

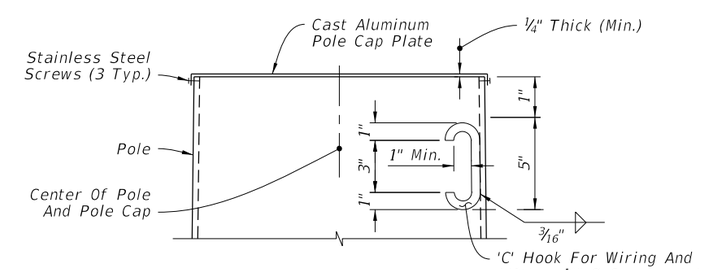

CUT-AWAY
(Option 'b')
(See Note #3)

POLE TOP

NOTES:

1. Clamps have been sized for Design Cable Loads shown in the Clamp Thickness Table, and a Maximum Pole Diameter at the Clamp location of 2'-1". Use one clamp per cable.
2. Install a properly sized Weather Head, fastened securely to the standard pipe for each pole location. At locations other than the wire entrance, the Weather Head face is to be left closed to outside atmosphere. Wire entrance installed per Index 17727.
3. Any combination of Option 'a' or 'b' may be used provided both lifting and wiring is accommodated.

CLAMP THICKNESS TABLE

Cable Diameter (in.)	Minimum Breaking Strength (kip)	Plate Thickness (in.)
1/2	25	1
7/16	18	7/8
3/8	11.5	3/4
1/4	3.15	3/8

ATTACHMENT DETAILS

6/23/2015 2:41:12 PM

LAST REVISION	REVISION	DESCRIPTION:			INDEX NO.	SHEET NO.
07/01/15			FDOT 2016 DESIGN STANDARDS	STEEL STRAIN POLE	17723	3 of 3

GENERAL NOTES:

1. Work these Index drawings with the Strain Pole Schedule in the Plans.
2. Shop Drawings: This Design Standard is considered fully detailed and no shop drawings are necessary. Submit shop drawings for minor modifications not detailed in the plans.
3. Materials:
   - A. Concrete: Class V Special or Class VI
   - B. Prestress Strands & Spiral Reinforcing: Specification Section 641
   - C. Hand and coupler cover plates: Non-corrosive material
   - D. Screws: Round headed, chrome plated
4. Fabrication:
   - A. Pole Taper for pole width, strands, reinforcing and void: 0.081 in/ft per face.
   - B. Concrete Cover: 1" minimum
   - C. Spiral Reinforcing: As shown, plus one turn for splices and two turns at both the tip and butt ends of the pole.
   - D. The design dimensions for Front Face (FF) and Back Face (BF) of the poles may vary transversely from the section shown by ± ¼" to assist with removal from forms. Balance addition and subtraction of the face widths to maintain section areas shown.
   - E. Tie ground wires to the interior of reinforcing steel to prevent displacement during concreting operations.
   - F. Cut the tip end of the prestressed strand first or simultaneously with the butt end.
   - G. Provide cover plates and screws for hand hole and couplers. Attach cover plates to the poles using lead anchors or embedded threaded inserts.
   - H. Provide Aluminum Identification Tags on the poles with the following information:
     - a. Financial Project ID.
     - b. Pole Manufacturer
     - c. Standard Pole Type Number
     - d. Pole Length (L)
5. Support locations are for strand release, storage, lifting and transport. Keep BF oriented downward until final erection.
6. Pick-up and support locations shown may vary within a tolerance of ±3".
7. Two point attachment: provide an eye bolt hole for the messenger wire.
8. Tether Wire: When required, field-drill the eyebolt hole prior to installation

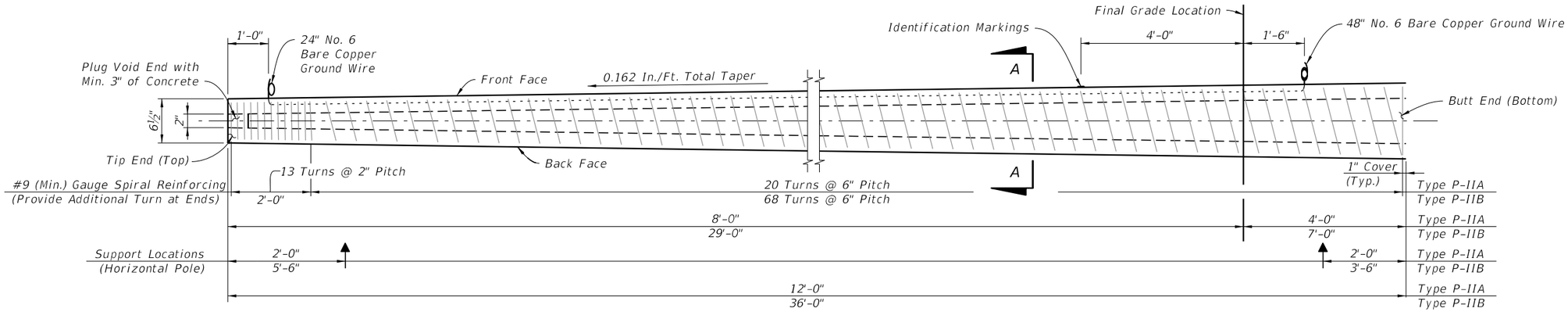

SERVICE POLE P-IIA (12 Ft.) & P-IIB (36 Ft.) ELEVATION
(Strands Not Shown)

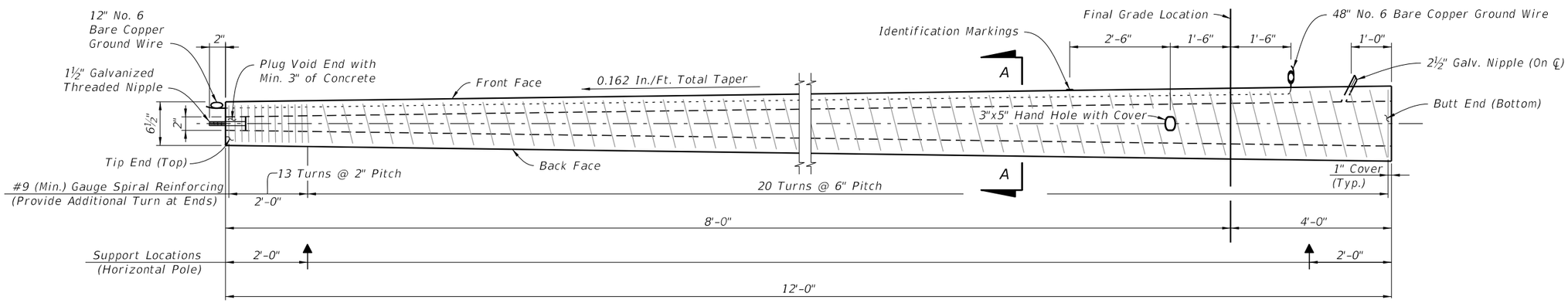

PEDESTAL POLE P-IIC (12 Ft.) ELEVATION
(Strands Not Shown)

NOTES:

Strands shown are continuous from Tip End to Butt End.

Elevation view scale is exaggerated vertically for clarity.

For final erection, tilt pole upright with single point attachment located a distance of 4 Ft. (for P-IIA & P-IIC) or 10 Ft. (for P-IIB) from the Tip End.

* Dimension may vary from 2¼" to 3½" to accommodate smaller radius of optional stepped (PVC) void. The void diameter shall not be less than 2".

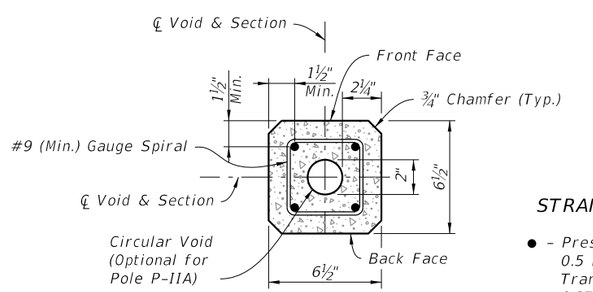

TIP END SECTION (TOP)

STRAND LEGEND

● - Prestressed Strand:
0.5 in. ~ 24 kips Before Transfer or
0.375 in. ~ 14 kips Before Transfer
(4 strands total)

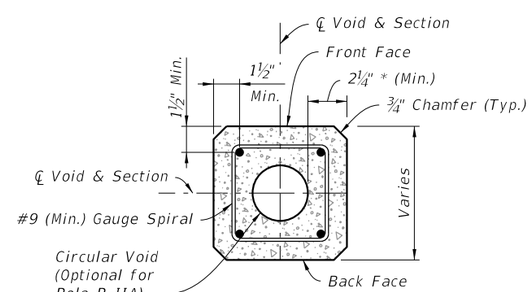

SECTION A-A
(Typical Square Section)

SERVICE AND PEDESTAL POLE TYPE P-II

6/18/2015 7:33:27 AM

LAST REVISION	REVISION	DESCRIPTION:			INDEX NO.	SHEET NO.
07/01/15			FDOT 2016 DESIGN STANDARDS	CONCRETE POLES	17725	2 of 8

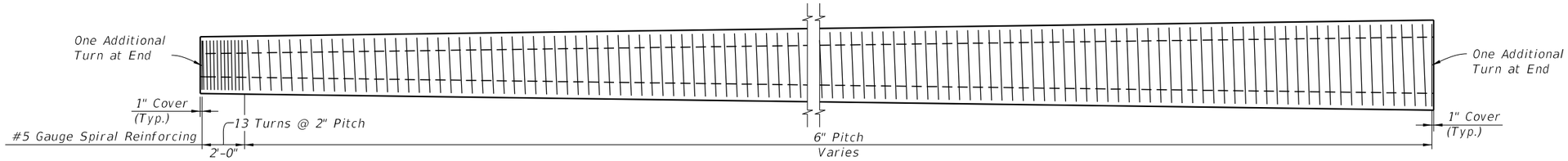

SPIRAL REINFORCING ELEVATION
(Strands, Holes, and Fixtures Not Shown)

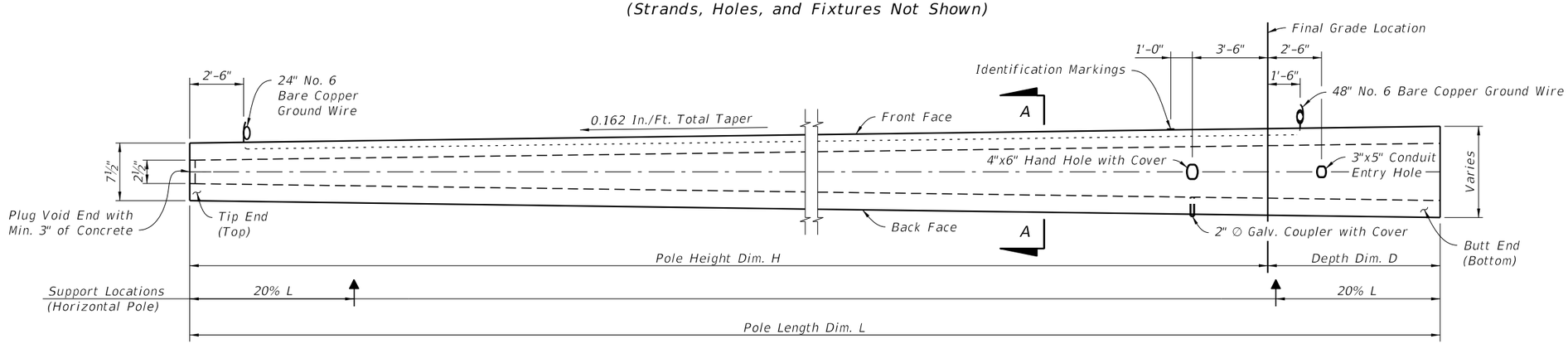

POLE ELEVATION
(Strands and Reinforcing Not Shown)
(See Design Standard Index 17900 and Specification 744 for
Modifications to Type P-III Poles Used at Traffic Monitoring Sites)

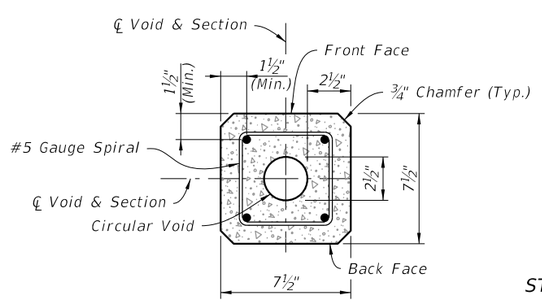

TIP END SECTION (TOP)

STRAND LEGEND

● - Prestressed Strand:
0.5 in. ~ 31 kips Before
Transfer (4 strands total)

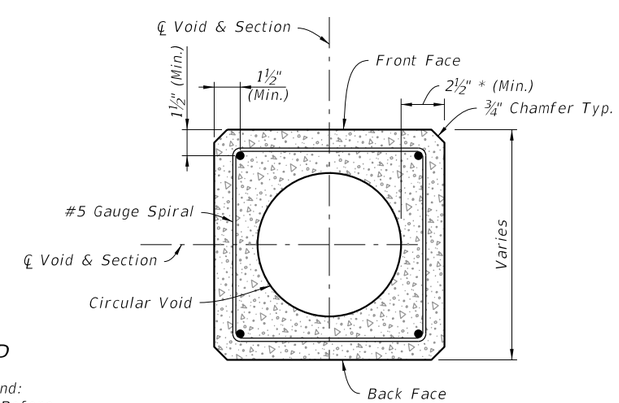

SECTION A-A
(Typical Square Section)

NOTES:

Strands shown are continuous from Tip End to Butt End.

Elevation view scale is exaggerated vertically for clarity.

For final erection, tilt pole upright with single point attachment located a distance 33.3% L from Tip End.

* Dimension may vary from 2½" to 3¾" to accommodate smaller radius of optional stepped (PVC) void. The void diameter shall not be less than 2½".

LIGHTING AND TRAFFIC MONITORING POLES TYPE P-III

6/18/2015 7:33:27 AM

LAST REVISION	REVISION	DESCRIPTION:			INDEX NO.	SHEET NO.
07/01/15			FDOT 2016 DESIGN STANDARDS	CONCRETE POLES	17725	3 of 8

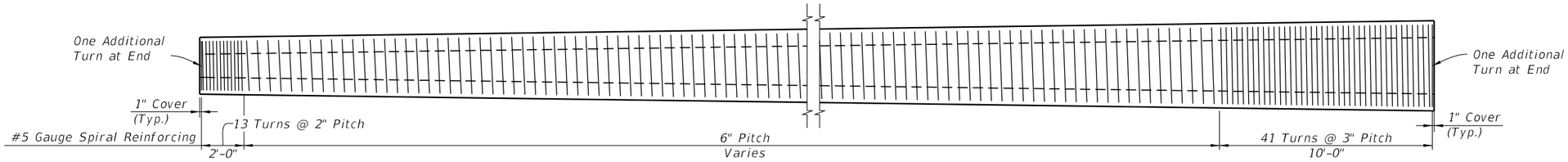

SPIRAL REINFORCING ELEVATION
(Strands, Holes, and Fixtures Not Shown)

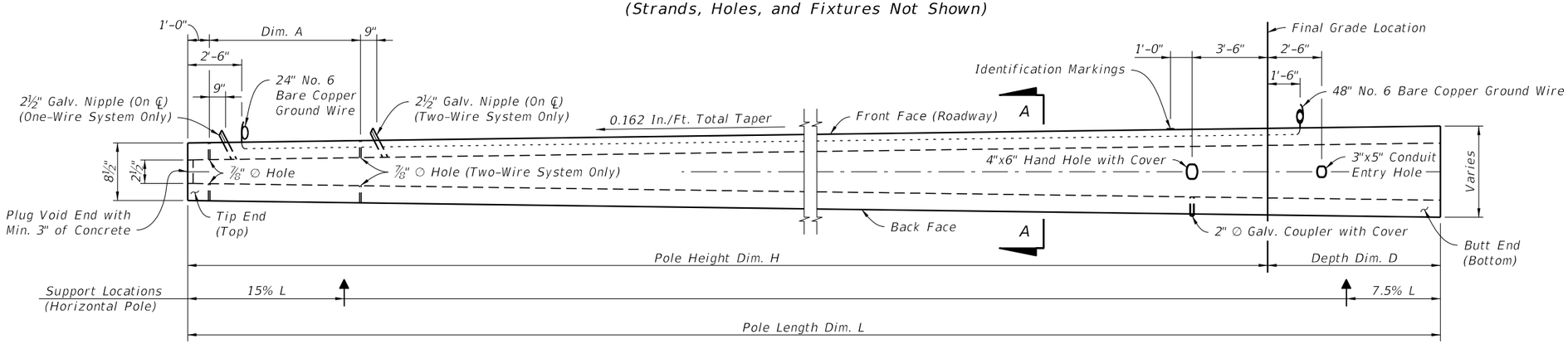

POLE ELEVATION
(Strands and Reinforcing Not Shown)

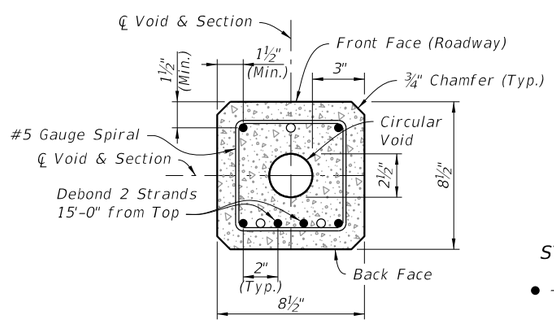

TIP END SECTION (TOP)
(For Dormant Strand Locations
See Section A-A)

STRAND LEGEND

● - Prestressed Strand
0.5 in. ~ 31 kips Before
Transfer (6 strands total)

○ - Dormant Strand
0.5 in. (3 strands total)
One 24" Splice Allowed
Per Strand

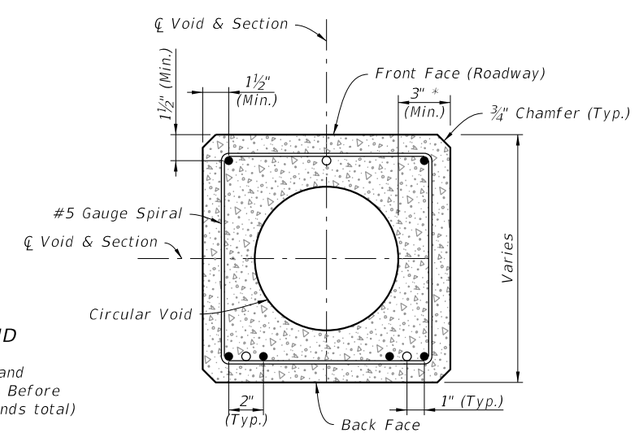

SECTION A-A
(Typical Square Section)

NOTES:

Strands shown are continuous from Tip End to Butt End.

Elevation view scale is exaggerated vertically for clarity.

For final erection, tilt pole upright with single point attachment located a distance 20% L from the Tip End.

* Dimension may vary from 3" to 4¼" to accommodate smaller radius of optional stepped (PVC) void. The void diameter shall not be less than 2½".

STRAIN POLE TYPE P-IV

6/25/2015 2:51:47 PM

LAST REVISION	REVISION	DESCRIPTION:			INDEX NO.	SHEET NO.
07/01/14			FDOT 2016 DESIGN STANDARDS	CONCRETE POLES	17725	4 of 8

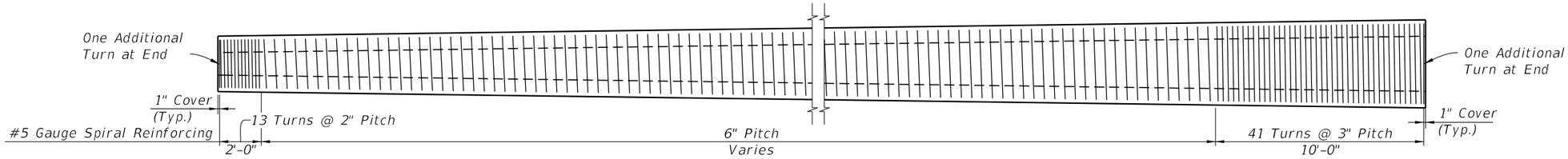

SPIRAL REINFORCING ELEVATION
(Strands, Holes, and Fixtures Not Shown)

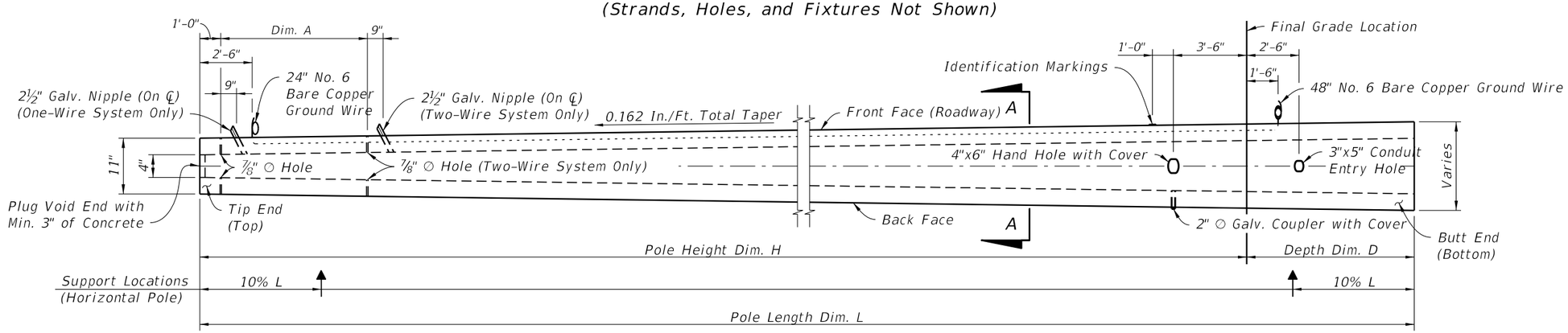

POLE ELEVATION
(Strands and Reinforcing Not Shown)

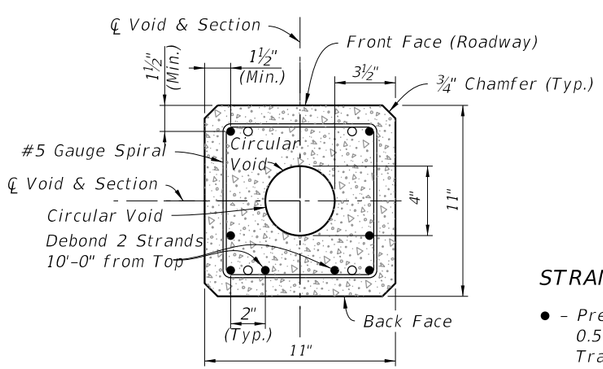

TIP END SECTION (TOP)
(For Dormant Strand Locations, See Section A-A)

STRAND LEGEND

● - Prestressed Strand 0.5 in. ~ 31 kips Before Transfer (8 strands total)

○ - Dormant Strand 0.5 in. (4 strands total) One 24" Splice Allowed Per Strand

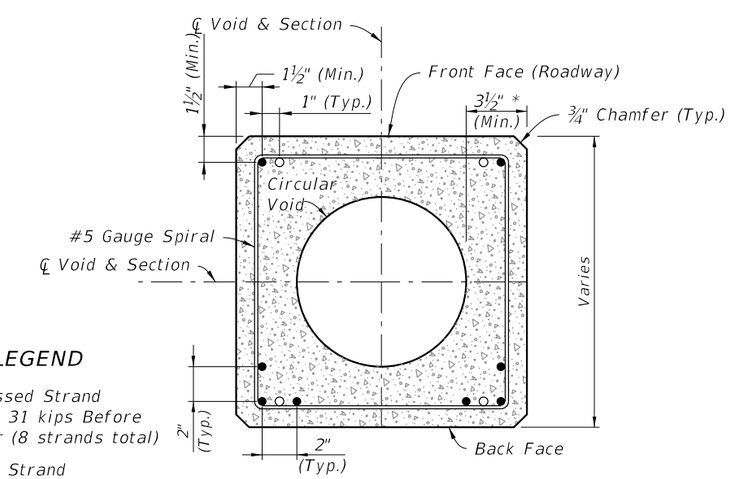

SECTION A-A
(Typical Square Section)

NOTES:

Strands shown are continuous from Tip End to Butt End.

Elevation view scale is exaggerated vertically for clarity.

For final erection, tilt pole upright with single point attachment located a distance 12.5% L from the Tip End.

* Dimension may vary from 3½" to 4¾" to accommodate smaller radius of optional stepped (PVC) void. The void diameter shall not be less than 4".

STRAIN POLE TYPE P-V

6/18/2015 7:33:29 AM

LAST REVISION	REVISION	DESCRIPTION:			INDEX NO.	SHEET NO.
07/01/15			FDOT 2016 DESIGN STANDARDS	CONCRETE POLES	17725	5 of 8

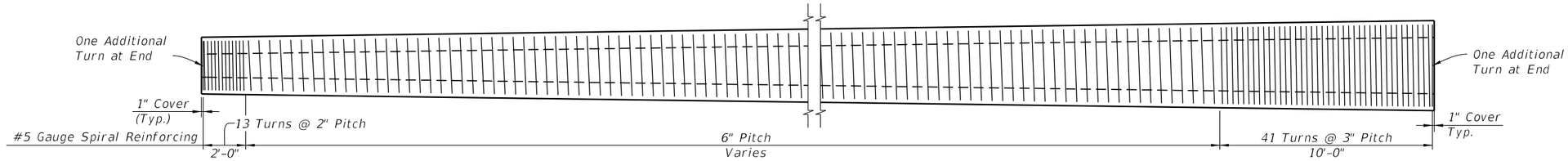

SPIRAL REINFORCING ELEVATION
(Strands, Holes, and Fixtures Not Shown)

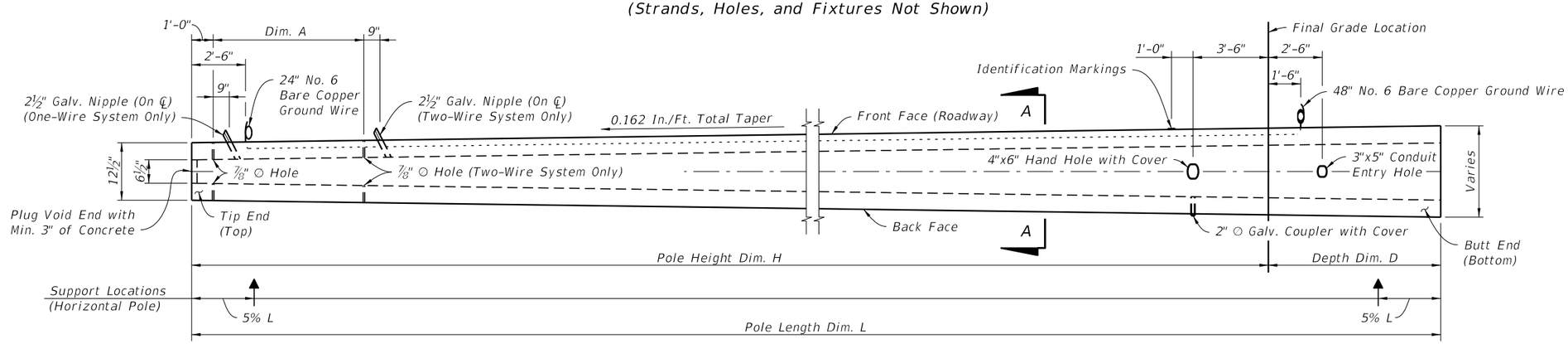

POLE ELEVATION
(Strands and Reinforcing Not Shown)

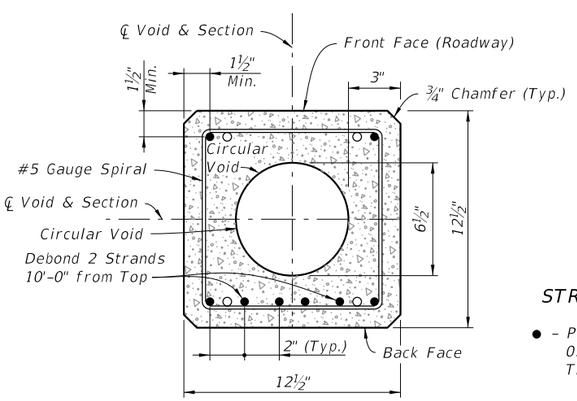

TIP END SECTION (TOP)
(For Dormant Strand Locations, See Section A-A)

STRAND LEGEND

● - Prestressed Strand 0.5 in. ~ 31 kips Before Transfer (8 strands total)

○ - Dormant Strand 0.5 in. (4 strands total) One 24" Splice Allowed Per Strand

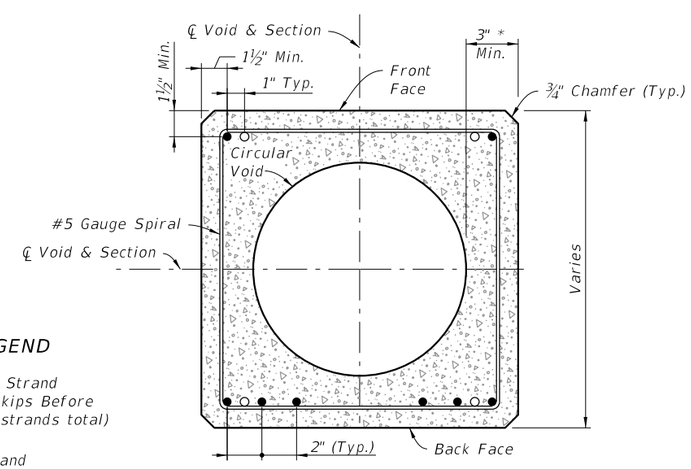

SECTION A-A
(Typical Square Section)

NOTES:

Strands shown are continuous from Tip End to Butt End.

Elevation view scale is exaggerated vertically for clarity.

For final erection, tilt pole upright with single point attachment located a distance 10% L from Tip End.

* Dimension may vary from 3" to 4¼" to accommodate smaller radius of optional stepped (PVC) void. The void diameter shall not be less than 6½".

STRAIN POLE TYPE P-VI

6/18/2015 7:33:30 AM

LAST REVISION	REVISION	DESCRIPTION:			INDEX NO.	SHEET NO.
07/01/15			FDOT 2016 DESIGN STANDARDS	CONCRETE POLES	17725	6 of 8

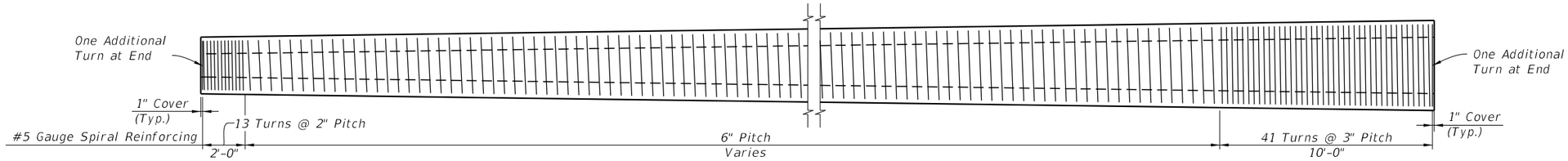

SPIRAL REINFORCING ELEVATION
(Strands, Holes, and Fixtures Not Shown)

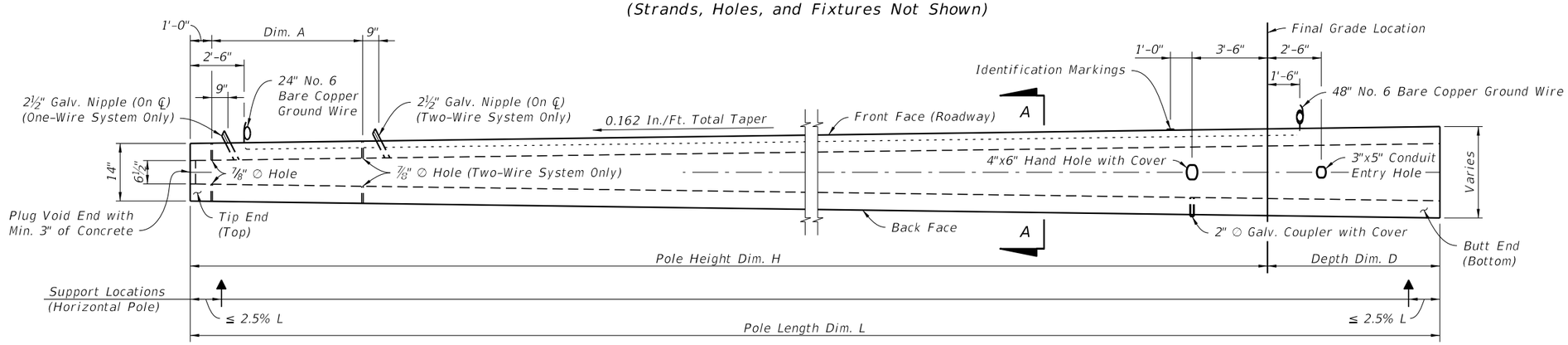

POLE ELEVATION
(Strands and Reinforcing Not Shown)

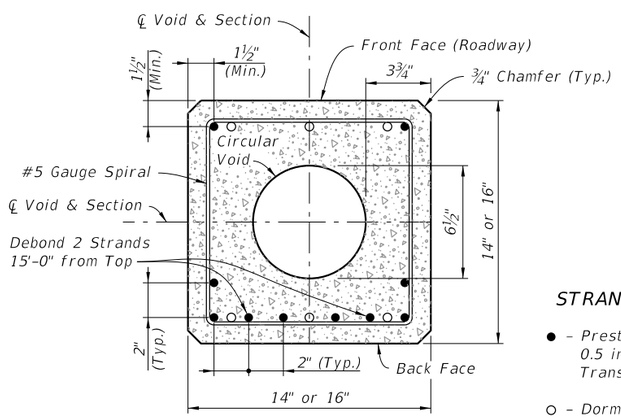

TIP END SECTION (TOP)
(For Dormant Strand Locations, See Section A-A)

STRAND LEGEND

● - Prestressed Strand 0.5 in. ~ 31 kips Before Transfer (10 strands total)

○ - Dormant Strand 0.5 in. (6 strands total) One 24" Splice Allowed Per Strands

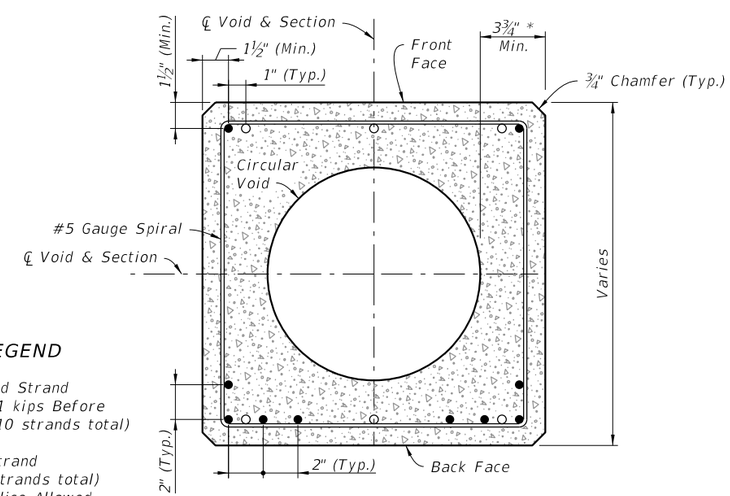

SECTION A-A
(Typical Square Section)

NOTES:

Strands shown are continuous from Tip End to Butt End.

Elevation view scale is exaggerated vertically for clarity.

For final erection, tilt pole upright with single point attachment located a distance 10% L from the Tip End.

* Dimension may vary from 3¾" to 5" to accommodate smaller radius of optional stepped (PVC) void. The void diameter shall not be less than 6½".

STRAIN POLE TYPE P-VII

6/18/2015 7:33:31 AM

LAST REVISION	REVISION	DESCRIPTION:			INDEX NO.	SHEET NO.
07/01/15			FDOT 2016 DESIGN STANDARDS	CONCRETE POLES	17725	7 of 8

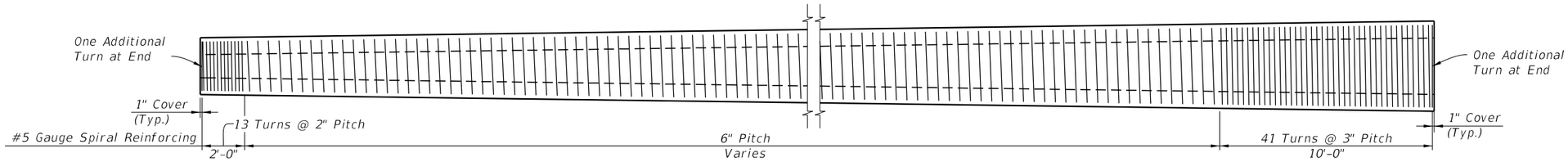

SPIRAL REINFORCING ELEVATION
(Strands, Holes, and Fixtures Not Shown)

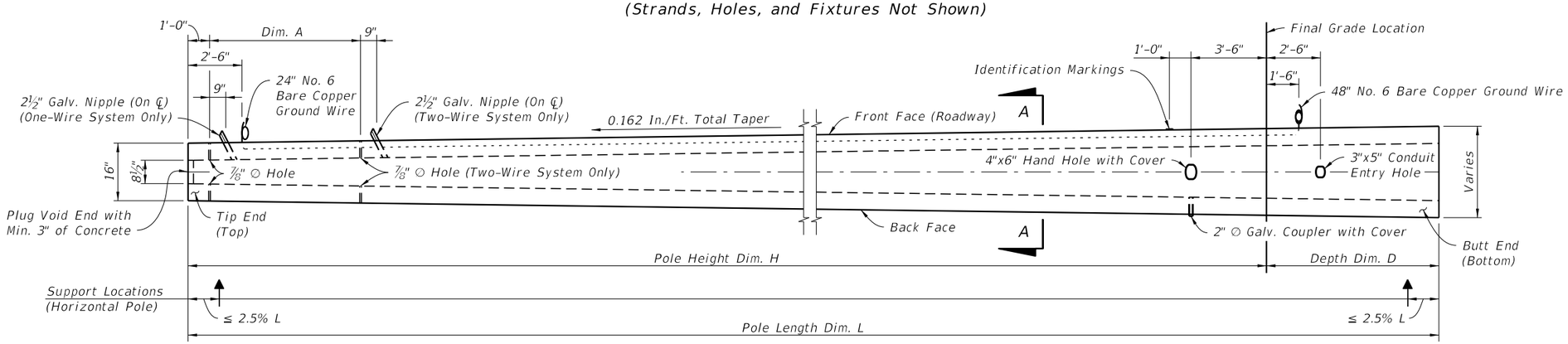

POLE ELEVATION
(Strands and Reinforcing Not Shown)

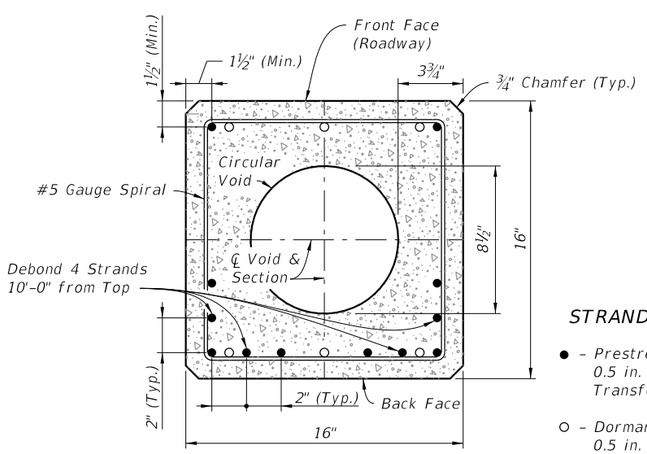

TIP END SECTION (TOP)
(For Dormant Strand Locations, See Section A-A)

STRAND LEGEND

● - Prestressed Strand 0.5 in. ~ 31 kips Before Transfer (12 strands total)

○ - Dormant Strand 0.5 in. (6 strands total) One 24" Splice Allowed Per Strand

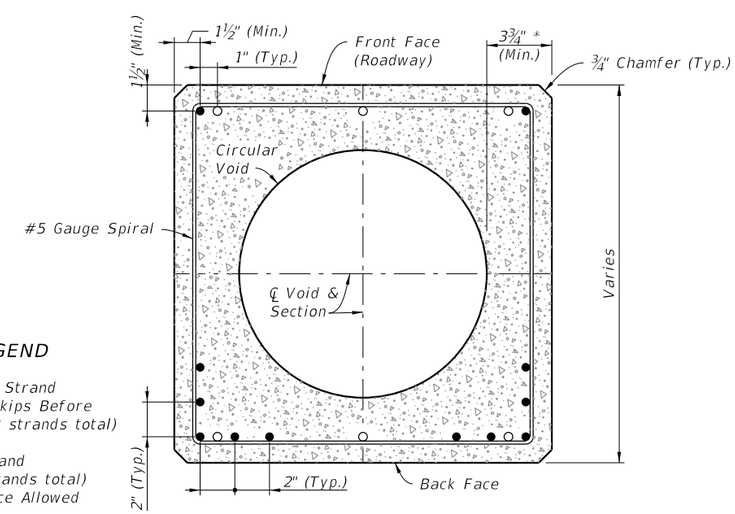

SECTION A-A
(Typical Square Section)

NOTES:

Strands shown are continuous from Tip End to Butt End.

Elevation view scale is exaggerated vertically for clarity.

For final erection, tilt pole upright with single point attachment located a distance 10% L from the Tip End.

* Dimension may vary from 3¾" to 5" to accommodate smaller radius of optional stepped (PVC) void. The void diameter shall not be less than 8½".

STRAIN POLE TYPE P-VIII

6/18/2015 7:33:31 AM

LAST REVISION	REVISION	DESCRIPTION:			INDEX NO.	SHEET NO.
07/01/15			FDOT 2016 DESIGN STANDARDS	CONCRETE POLES	17725	8 of 8

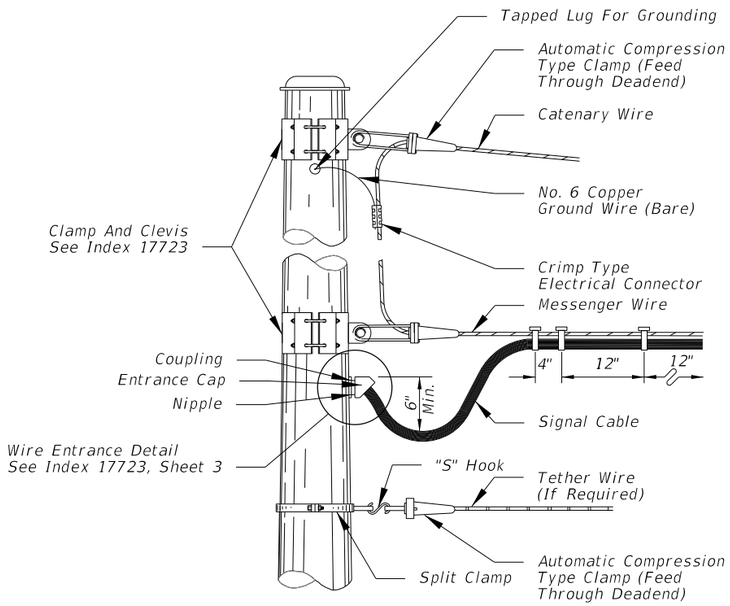

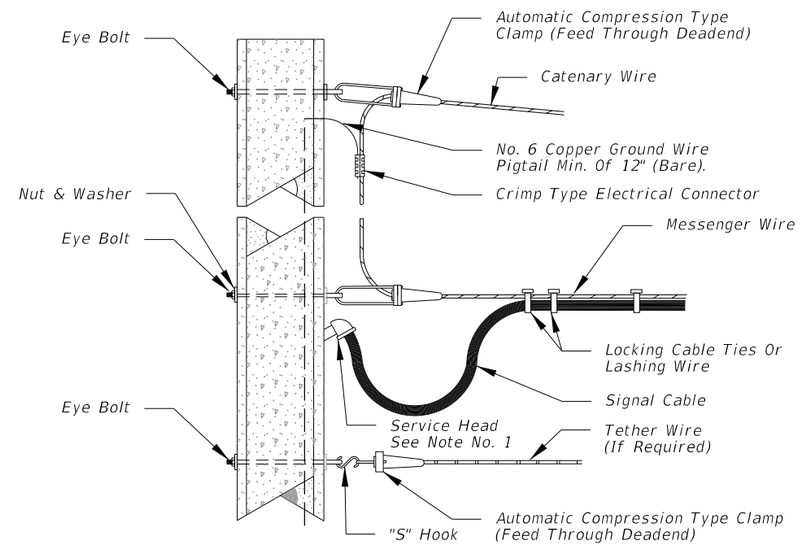

NOTES:

1. With the approval of the resident engineer, the service head hole for joint use poles may be drilled by the utility company at an angle of 90° but not less than 45° to the face of the pole.
2. Lashing wire should normally be used for distances of 12' or greater.
3. All hardware for signal attachment shall be stainless steel.
4. Hole for eye bolt will require field reaming for 1" & 1 ¼" eye bolts.
5. Meet all grounding requirements of Section 620 of the Standard Specifications.

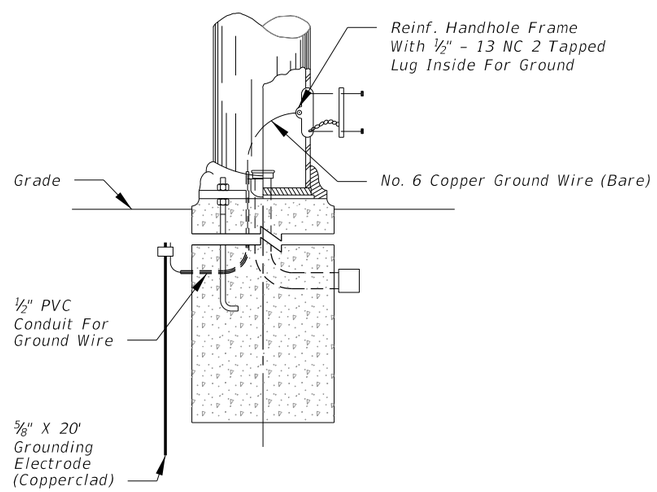

ELEVATION
STEEL POLE

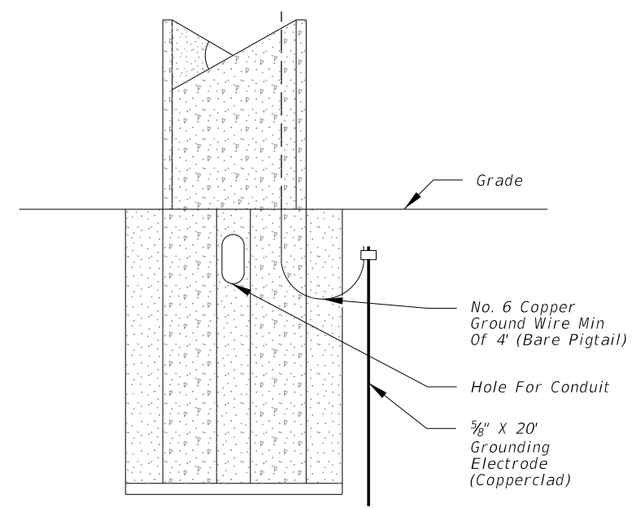

ELEVATION
PRESTRESSED CONCRETE POLE

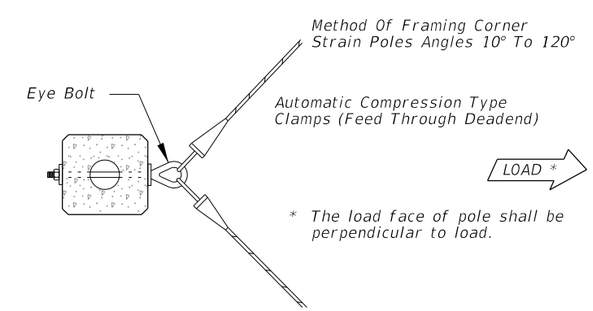

PLAN
PRESTRESSED CONCRETE POLE

6/22/2015 2:53:35 PM

LAST REVISION	REVISION	DESCRIPTION:			INDEX NO.	SHEET NO.
07/01/15			FDOT 2016 DESIGN STANDARDS	SIGNAL CABLE & SPAN WIRE INSTALLATION DETAILS	17727	1 of 2

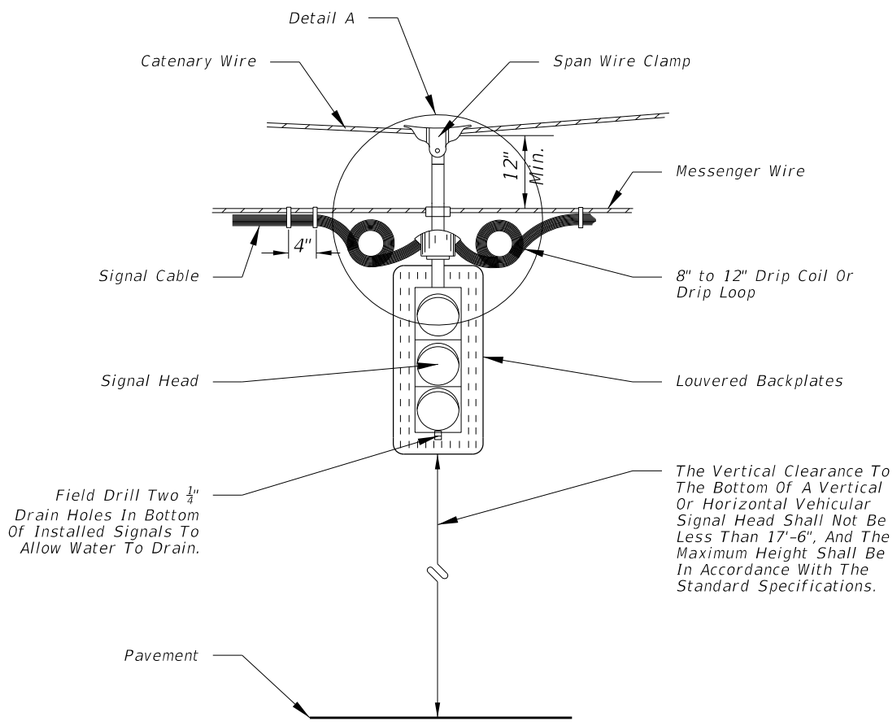

ELEVATION
SIGNAL ATTACHMENT

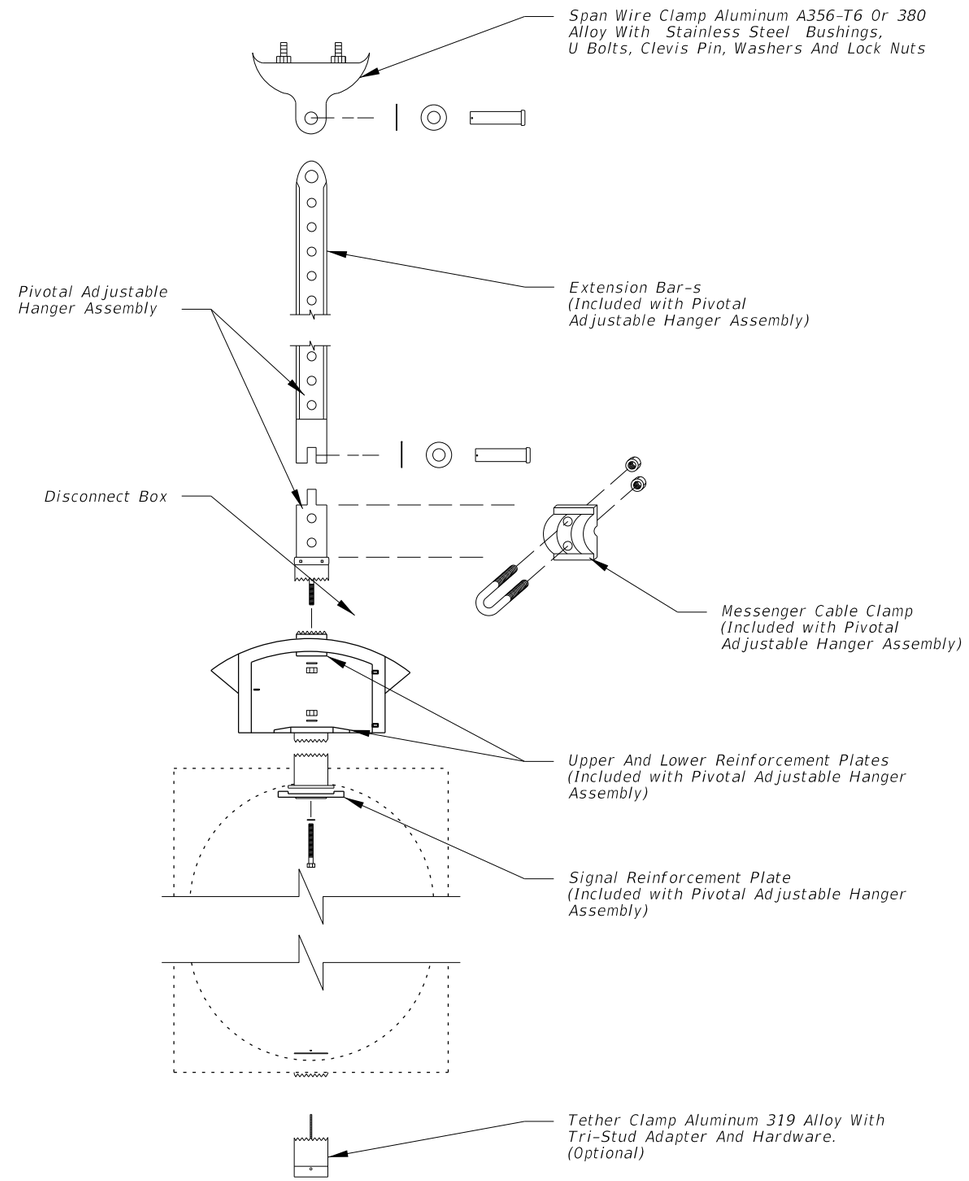

Detail A

Notes:

1. This drawing is representative of a Proprietary Pivotal Adjustable Hanger Assembly listed on the Department's Approved Products List (APL). For specific details and requirements see the vendor drawings on the APL. The proprietary pivotal adjustable hanger assembly shall be assembled in accordance with the manufacturer's detailed drawings, procedures and specifications.

2. With the approval of the resident engineer, the service head hole for joint use poles may be drilled by the utility company at an angle of 90° but not less than 45° to the face of the pole.

3. Lashing wire should normally be used for distances of 12' or greater.

4. The overlapped connection of adjustable hangers shall use a minimum of 2 bolts with a minimum spacing of 2" between bolts.

5. Meet all grounding requirements of Section 620 of the Standard Specifications.

TWO POINT ATTACHMENT

6/22/2015 2:53:36 PM

LAST REVISION	REVISION	DESCRIPTION:			INDEX NO.	SHEET NO.
12/15/14			FDOT 2016 DESIGN STANDARDS	SIGNAL CABLE & SPAN WIRE INSTALLATION DETAILS	17727	2 of 2

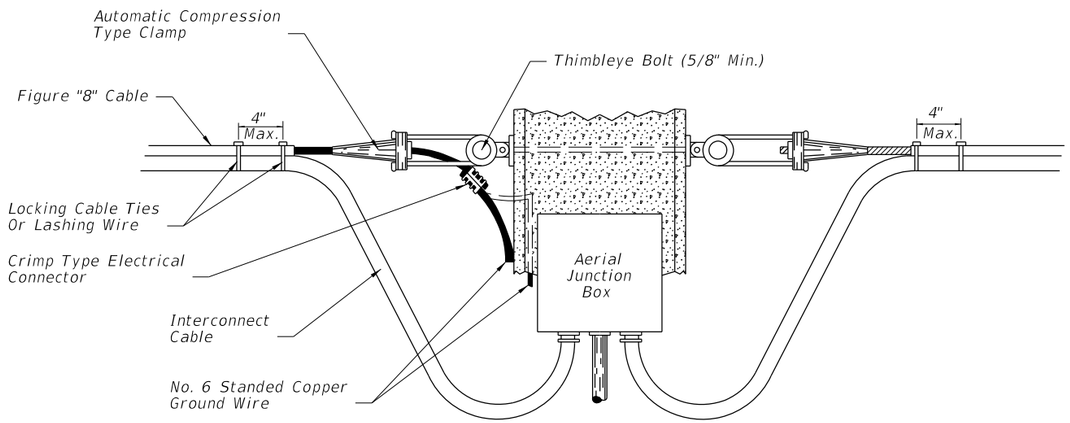

FIGURE A
CABLE DROP AND
TERMINATION DETAIL
AERIAL INTERCONNECT FIGURE "8"

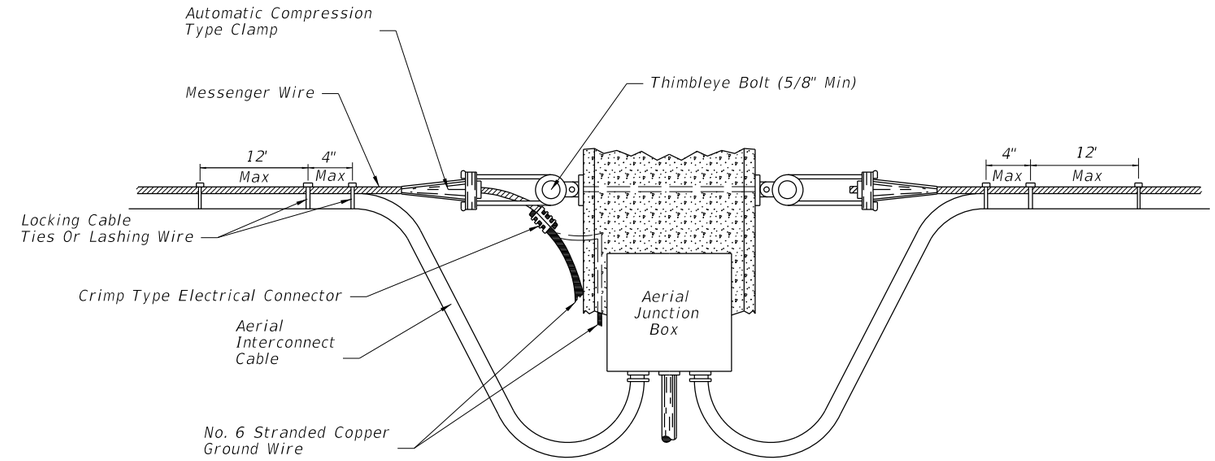

FIGURE B
CABLE DROP AND
TERMINATION DETAIL
AERIAL INTERCONNECT MESSENGER
WIRE WITH CLAMPS

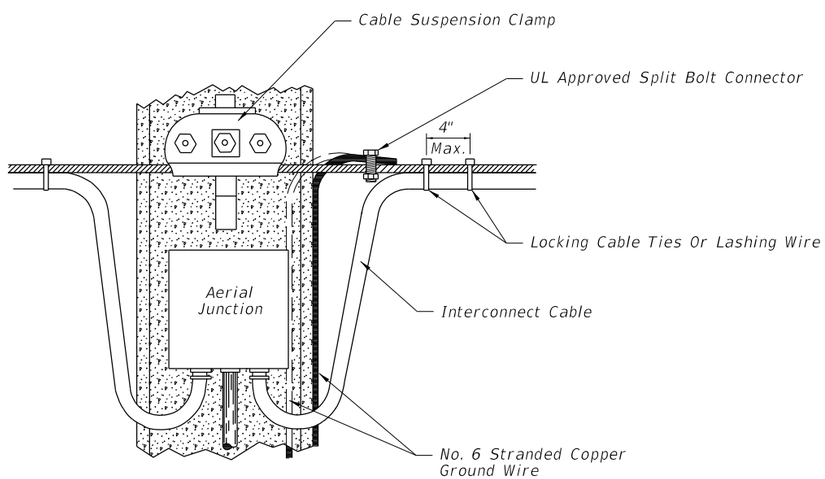

FIGURE C
CABLE DROP DETAIL
AERIAL INTERCONNECT MESSENGER
WIRE WITH CLAMPS

Notes:

1. The messenger wire of the interconnect cables shall be grounded to the copper ground wire of the pole or to the external wire extending down the pole.
2. When utilizing the external ground wire to the pole, a piece of ½" conduit shall extend up the pole externally to a point 8' above finish grade to protect the ground wire connecting the messenger wire to the ground rod.
3. Locking cable ties or lashing wire when used shall be placed no further than 12" apart except at the point of cable drop or terminations where one (1) shall be placed at the point where the cables separate from the messenger wire and another placed 4" (max) from that tie. When using figure "8" interconnect cable only the locking cable ties shall be used.
4. If accessible the internal ground wire of the support pole may be used to ground the messenger wire.
5. Lashing wire should normally be used for distances of 12' or greater.
6. Meet all grounding requirements of Section 620 of the Standard Specifications.

6/10/2015 9:58:51 AM

LAST REVISION	REVISION	DESCRIPTION:			INDEX NO.	SHEET NO.
07/01/00			FDOT 2016 DESIGN STANDARDS	AERIAL INTERCONNECT	17733	1 of 1

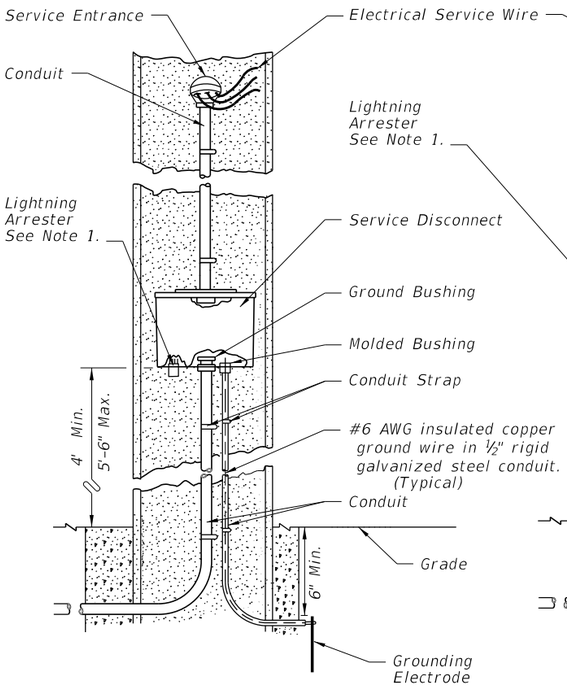

AERIAL FEED
(NO METER USED)
FIGURE A

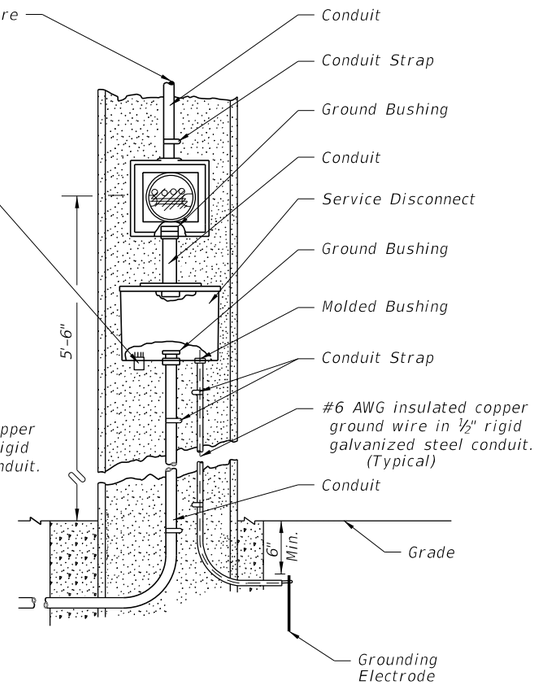

AERIAL FEED
(METER USED)
FIGURE B

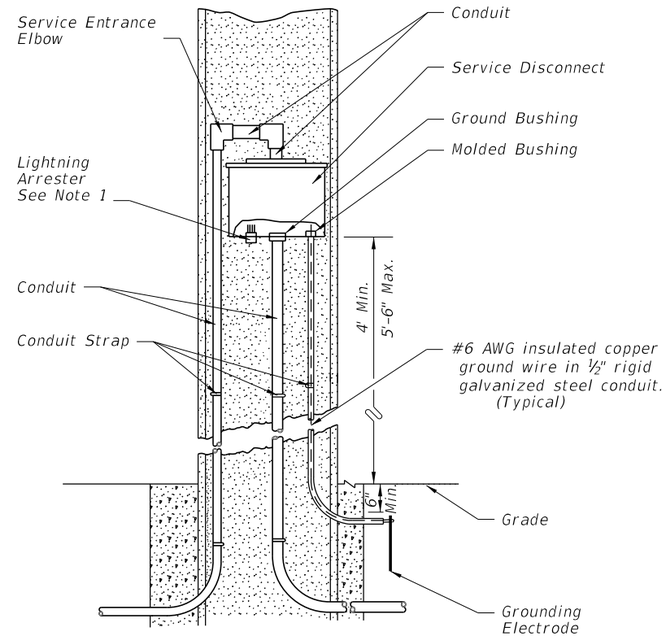

UNDERGROUND FEED
(NO METER USED)
FIGURE C

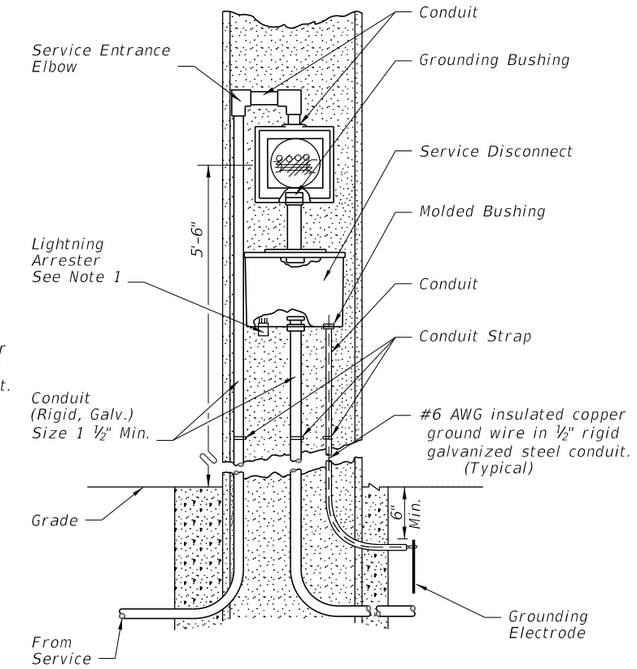

TYPE "B" UNDERGROUND FEED
(METER USED)
FIGURE D

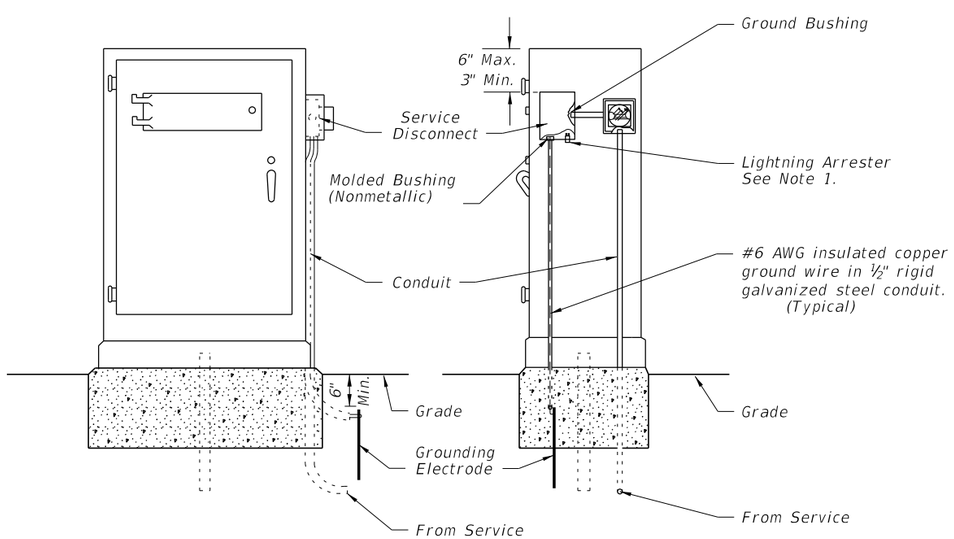

UNDERGROUND CABINET MOUNTED
(METER USED)
FIGURE E

NOTES:

1. The lightning arrester can be located on the side or bottom of the service disconnect enclosure at the Contractor's Option.
2. Liquidtight flexible conduit is approved for use from the electrical disconnect to the cabinet when both are installed on the same pole.
3. Bond all elements together to form an Intersection Grounding Network in accordance with Section 620 of the Department's current Standard Specifications for Road and Bridge Construction. The bond wire shall be run in conduit with the Electrical Service Wire or Signal Cable.
4. Meet all grounding requirements of Section 620 of the Standard Specifications.
5. The Service Disconnect shall be lockable by padlock and four keys provided to the maintaining agency. The door shall have a minimum of three hinges and be lockable. No screws to be used to attach door.
6. The Service Disconnect shall be Nema 3R or better.

POLE SELECTION TABLE - SINGLE ARM - WITH & WITHOUT LUMINAIRE					
ARM TYPE	D1	D3	D5	D6	D7
POLE TYPE	S1 & S21 Lum	S2 & S22 Lum	S3 & S23 Lum	S4 & S24 Lum	S6

POLE SELECTION TABLE - DOUBLE ARM - WITHOUT LUMINAIRE										
ARM TYPE	D1 - D1	D3 - D1	D5 - D2	D6 - D2	D4 - D4	D5 - D4	D6 - D4	D5 - D5	D6 - D5	D6 - D6
POLE TYPE	S1	S2	S3	S4	S3	S4	S4	S4	S4	S5

Arm 1 is listed first

ARM DESIGN TABLE - ALL CASES												
ARM TYPE	ARM LENGTH	MAST ARM				ARM EXTENSION				ARM CONNECTION & WELDS		
		FA/SA (ft)	FB/SB (in)	FC/SC (in)	FD/SD (in)	FE/SE (ft)	FF/SF (in)	FG/SG (in)	FH/SH (in)	HT (in)	FJ/SJ (in)	FK/SK (in)
D1	36'-0"	36	8.99	14	0.1793					20	25	2.5
D2	36'-0"	36	9.00	14	0.1793					30	36	3
D3	46'-0"	36.1	8.95	14	0.1793	11.9	13.36	15	0.313	20	25	2.5
D4	46'-0"	36.1	8.95	14	0.1793	11.9	13.37	15	0.313	30	36	3
D5	60'-0"	35.8	7.99	13	0.1793	26.2	12.37	16	0.375	30	36	3
D6	70'-6"	39.1	9.52	15	0.1793	33.4	14.36	19	0.375	30	36	3
D7	78'-0"	40	8.47	14.07	0.1793	40	13.44	19	0.375	30	34	3

Arm Camber Angle = 2 degrees

POLE, CONNECTION AND SHAFT DESIGN TABLE - SINGLE & DOUBLE ARM																									
POLE TYPE	UA (ft)	UC (in)	UD (in)	UE (in)	UG (ft)	UPRIGHT BASE CONNECTION					CONNECTION PLATE DATA									DRILLED SHAFT DATA					
						No. Bolts	BA (in)	BB (in)	BC (in)	BF (in)	HT (in)	FJ/SJ (in)	FL/SL (in)	FN/SN (in)	FO/SO (in)	FP/SP (in)	FR/SR (in)	FS/SS (in)	FT/ST (in)	DA (ft)	DB (ft)	RA	RB	RC	RD (in)
S1	25	12.53	16	0.375		6	30	2.5	1.75	36	20	25	0.75	0.438	15.5	1	2	8	0.438	12	4	11	14	9	12
S2	25	14.53	18	0.375		6	32	2.5	1.75	36	20	25	0.75	0.438	15.5	1	2	8	0.438	12	4.5	11	16	9	12
S3	25	17.53	21	0.375		6	37	2.5	2	40	30	36	0.75	0.438	22	1.25	2.5	12.5	0.438	15	4.5	11	16	10	8
S4	25	22.53	26	0.375		6	42	2.5	2	40	30	36	0.75	0.438	22	1.25	2	12.5	0.438	17	5	11	18	10	8
S5	25	23.53	27	0.375		6	45	2.5	2.25	45	30	36	0.75	0.438	22	1.25	2	12.5	0.438	18	5	11	18	10	8
S6	25	21.53	25	0.375		6	41	2.5	2	40	30	34	0.75	0.5	16.5	1.25	2	12.5	0.5	15	5	11	18	10	8
S21 Lum	39	10.57	16	0.375	37.5	6	30	2.5	1.75	40	20	25	0.75	0.438	11.5	1	2	8	0.438	12	4	11	14	9	12
S22 Lum	39	12.57	18	0.375	37.5	6	32	2.5	1.75	40	20	25	0.75	0.438	12.5	1	2	8	0.438	12	4.5	11	16	9	12
S23 Lum	39	15.57	21	0.375	37.5	6	37	2.5	2	40	30	36	0.75	0.438	15	1.25	2.5	12.5	0.438	14	4.5	11	16	10	8
S24 Lum	39	20.57	26	0.375	37.5	6	42	2.5	2	40	30	36	0.75	0.438	17	1.25	2	12.5	0.438	15	5	11	18	10	8

LUMINAIRE AND LUMINAIRE CONNECTION											
LA (ft)	LB (ft)	LC (in)	LD (in)	LE	LF (ft)	LG (in)	LH (in)	LJ (in)	LK (in)	LL (deg)	UG (ft)
40	10	3	0.125	0.5	8	0.5	0.75	0.25	0.25	0	37.5

Notes:
1. Work this Index with Index No. 17745.
2. Design Wind Speed = 150 mph with Signal Backplates.

"D" MAST ARMS

POLE SELECTION TABLE - SINGLE ARM - WITH & WITHOUT LUMINAIRE					
ARM TYPE	E1	E3	E5	E6	E7
POLE TYPE	T1 & T21 Lum	T2 & T22 Lum	T3 & T23 Lum	T4 & T24 Lum	T6

POLE SELECTION TABLE - DOUBLE ARM - WITHOUT LUMINAIRE										
ARM TYPE	E1 - E1	E3 - E1	E5 - E2	E6 - E2	E4 - E4	E5 - E4	E6 - E4	E5 - E5	E6 - E5	E6 - E6
POLE TYPE	T1	T2	T3	T4	T3	T4	T4	T4	T4	T5

Arm 1 is listed first

ARM DESIGN TABLE - ALL CASES												
ARM TYPE	ARM LENGTH	MAST ARM				ARM EXTENSION				ARM CONNECTION & WELDS		
		FA/SA (ft)	FB/SB (in)	FC/SC (in)	FD/SD (in)	FE/SE (ft)	FF/SF (in)	FG/SG (in)	FH/SH (in)	HT (in)	FJ/SJ (in)	FK/SK (in)
E1	36'-0"	36.0	5.98	11	0.25					22	23	2
E2	36'-0"	36.0	5.99	11	0.25					30	32	2.75
E3	46'-0"	35.1	7.09	12	0.25	12.9	11.22	13	0.313	22	23	2
E4	46'-0"	35.1	7.09	12	0.25	12.9	11.23	13	0.313	30	32	2.75
E5	60'-0"	34.8	6.13	11	0.25	27.2	10.22	14	0.375	30	32	2.75
E6	70'-6"	38.1	6.66	12	0.25	34.4	11.22	16	0.375	30	32	2.75
E7	78'-0"	40.0	7.47	13.07	0.1793	40	12.43	18	0.375	30	32	2.5

Arm Camber Angle = 2 degrees

POLE, CONNECTION AND SHAFT DESIGN TABLE - SINGLE & DOUBLE ARM																									
POLE TYPE	UA (ft)	UC (in)	UD (in)	UE (in)	UG (ft)	UPRIGHT BASE CONNECTION					CONNECTION PLATE DATA									DRILLED SHAFT DATA					
						No. Bolts	BA (in)	BB (in)	BC (in)	BF (in)	HT (in)	FJ/SJ (in)	FL/SL (in)	FN/SN (in)	FO/SO (in)	FP/SP (in)	FR/SR (in)	FS/SS (in)	FT/ST (in)	DA (ft)	DB (ft)	RA	RB	RC	RD (in)
T1	25	10.53	14	0.375		6	26	2.5	1.5	36	22	23	0.5	0.375	14	1	2.0	9	0.375	11	4	11	14	8	12
T2	25	12.53	16	0.375		6	28	2.5	1.5	36	22	23	0.5	0.375	14	1	2.0	9	0.375	12	4	11	14	9	12
T3	25	15.53	19	0.375		6	35	2.5	2	40	30	32	0.75	0.375	19.5	1.25	2.25	12.5	0.375	12	4.5	11	16	9	12
T4	25	18.53	22	0.5		6	38	2.5	2	40	30	32	0.75	0.375	19.5	1.25	2.0	12.5	0.375	15	4.5	11	16	10	8
T5	25	18.53	22	0.5		6	38	2.5	2	40	30	32	0.75	0.375	19.5	1.25	2.0	12.5	0.375	16	4.5	11	16	10	8
T6	25	18.53	22	0.375		6	38	2.5	2	40	30	32	0.75	0.438	15	1.25	2.0	12.5	0.438	14	4.5	11	16	10	8
T21 Lum	39	8.57	14	0.375	37.5	6	26	2.5	1.5	40	22	23	0.5	0.375	10	1	2.0	9	0.375	11	4	11	14	8	12
T22 Lum	39	10.57	16	0.375	37.5	6	30	2.5	1.75	40	22	23	0.5	0.375	11	1	2.0	9	0.375	12	4	11	14	9	12
T23 Lum	39	13.57	19	0.375	37.5	6	35	2.5	2	40	30	32	0.75	0.375	13	1.25	2.25	12.5	0.375	12	4.5	11	16	9	12
T24 Lum	39	16.57	22	0.375	37.5	6	38	2.5	2	40	30	32	0.75	0.375	15	1.25	2.0	12.5	0.375	14	4.5	11	16	10	12

LUMINAIRE AND LUMINAIRE CONNECTION											
LA (ft)	LB (ft)	LC (in)	LD (in)	LE	LF (ft)	LG (in)	LH (in)	LJ (in)	LK (in)	LL (deg)	UG (ft)
40	10	3	0.125	0.5	8	0.5	0.75	0.25	0.25	0	37.5

Notes:
1. Work this Index with Index No. 17745.
2. Design Wind Speed = 150 mph without Signal Backplates.
130 mph with or without Signal Backplates.
110 mph with or without Signal Backplates.

6/10/2015 10:11:20 AM

"E" MAST ARMS

GENERAL NOTES

1. Shop Drawings: This Index is considered fully detailed, only submit shop drawings for minor modifications not detailed in the Plans.

2. Prior to Fabrication: Verify the installed foundation elevation will result in the required signal elevation and adjust the Pole height as needed.

3. Details for Signal and Sign locations, Signal Head attachment, Sign attachment, Pedestrian Head attachment, and Foundation Conduit are not shown for simplicity.

4. Materials: Split-lock washers and self-locking nuts are not permitted
   - A. Poles, Mast Arms and Backing Rings:
     - a. Less than 3/16": ASTM A1011 Grade 50, 55, 60 or 65
     - b. Greater than or equal to 3/16": ASTM A572 Grade 50, 55, 60 or 65
     - c. ASTM A595 Grade A (55 ksi yield) or Grade B (60 ksi yield)
   - B. Steel Plates: ASTM A36
   - C. Weld Metal: E70XX
   - D. Bolts, Nuts and Washers:
     - a. High Strength Bolts: ASTM A325 Type 1
     - b. Nuts: ASTM A563 DH Heavy-Hex
     - c. Washers: ASTM F436 Type 1, one under turned element
   - E. Anchor Bolts, Nuts and Washers:
     - a. Anchor Bolts: ASTM F1554 Grade 55
     - b. Nuts: ASTM A563 Grade A Heavy-Hex (5 per anchor bolt)
     - c. Plate Washers: ASTM A36 (2 per bolt)
   - F. Threaded Bars/Studs: ASTM A36 or ASTM A307
   - G. Handhole Frame: ASTM A709 or ASTM A36, Grade 36
   - H. Handhole Cover: ASTM A1011 Grade 50, 55, 60 or 65
   - I. Aluminum Pole Caps and Nut Covers: ASTM B26 (319-F)
   - J. Stainless Steel Screws: AISI Type 316
   - K. Concrete: Class IV (Drilled Shaft) for all environmental classifications.
   - L. Reinforcing Steel: Specification Section 415

5. Fabrication:
   - A. Pole and Mast Arm Taper: Change diameter at a rate of 0.14 inches per foot.
   - B. Upright splices are not allowed. Transverse welds are only permitted at the base.
   - C. First and Second arm camber angle = 2°
   - D. Provide bolt hole diameters as follows:
     - a. Bolts (except Anchor Bolts): Bolt diameter plus 1/16", prior to galvanizing.
     - b. Anchor Bolts: Bolt diameter plus 1/2" (Max.)
   - E. Locate handhole 90° from arm on single arm poles or 90° from first arm of double arm poles facing away from traffic or see special instructions on the Mast Arm Tabulation Sheet.
   - F. Provide a 'J' or 'C' hook at the top of the pole for signal wiring support (See Sheet 6).
   - G. Perform all welding in accordance with Specification Section 460-6.4.
   - H. Hot Dip Galvanize after fabrication.

6. Coatings:
   - A. All Nuts, Bolts, Washers and Threaded Bars/Studs: ASTM F2329
   - B. All other steel items ASTM A123

7. Construction:
   - A. Foundation: Specification Section 455 Drilled Shaft, except that payment is included in the cost of the Mast Arm.
   - B. Install Pole vertically.
   - C. Place structural grout pad with drain between top of foundation and bottom of baseplate in accordance with Specification Section 649-7.
   - D. Attach Sign Panels and Signals centered on the elevation of the Mast Arm.
   - E. Wire Access holes are 1 1/2" or less in diameter.

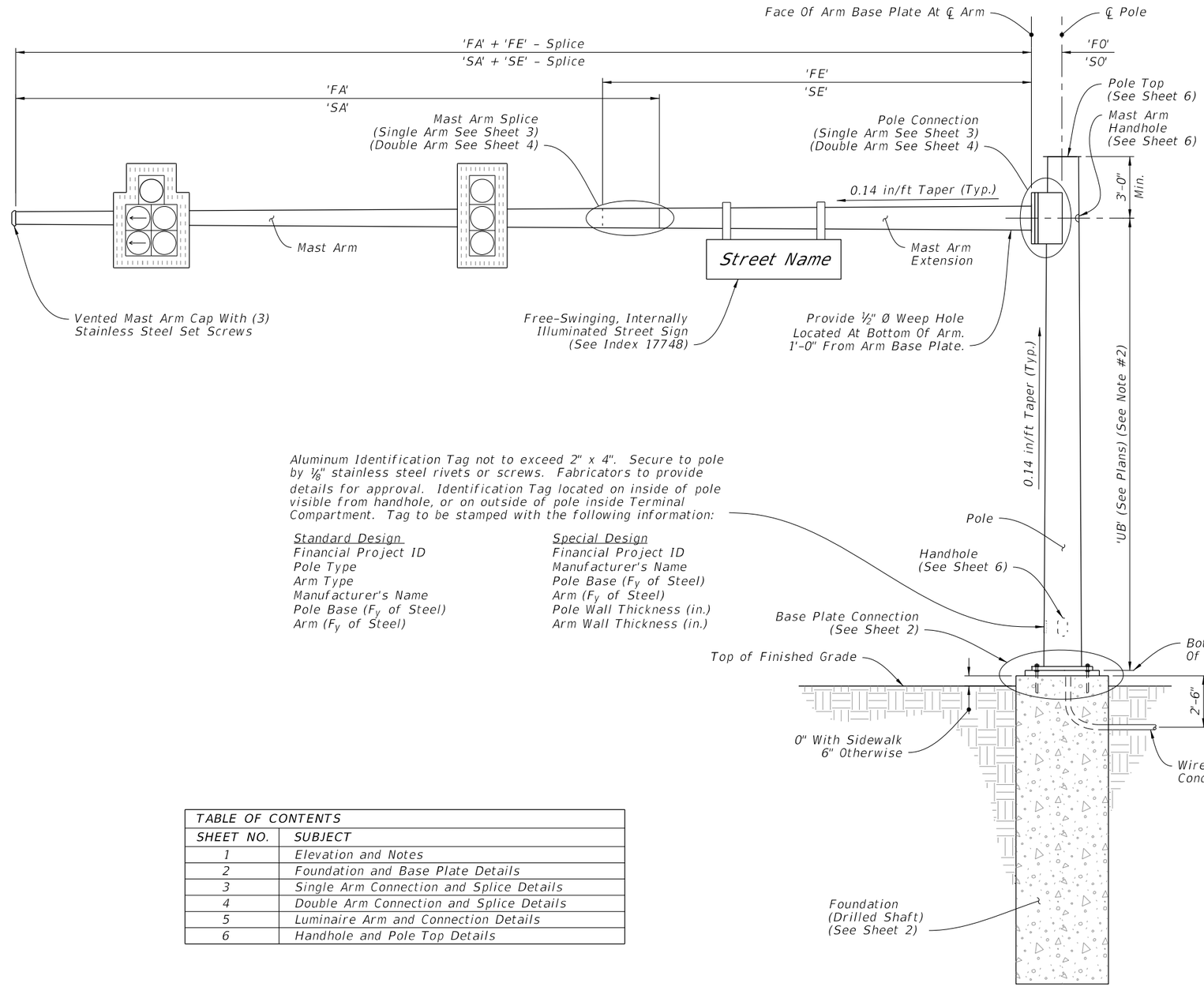

Aluminum Identification Tag not to exceed 2" x 4". Secure to pole by 1/8" stainless steel rivets or screws. Fabricators to provide details for approval. Identification Tag located on inside of pole visible from handhole, or on outside of pole inside Terminal Compartment. Tag to be stamped with the following information:

Standard Design	Special Design
Financial Project ID	Financial Project ID
Pole Type	Manufacturer's Name
Arm Type	Pole Base (F_y of Steel)
Manufacturer's Name	Arm (F_y of Steel)
Pole Base (F_y of Steel)	Pole Wall Thickness (in.)
Arm (F_y of Steel)	Arm Wall Thickness (in.)

TABLE OF CONTENTS

SHEET NO.	SUBJECT
1	Elevation and Notes
2	Foundation and Base Plate Details
3	Single Arm Connection and Splice Details
4	Double Arm Connection and Splice Details
5	Luminaire Arm and Connection Details
6	Handhole and Pole Top Details

Single Arm Shown, Double Arm Similar
(Luminaire Arm Not Shown)

MAST ARM ASSEMBLY

ELEVATION AND NOTES

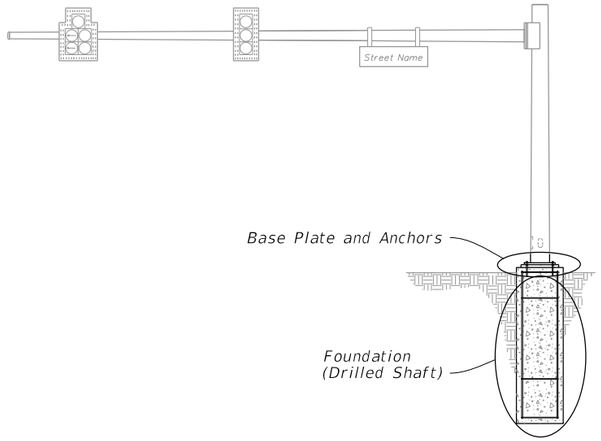

MAST ARM ASSEMBLY

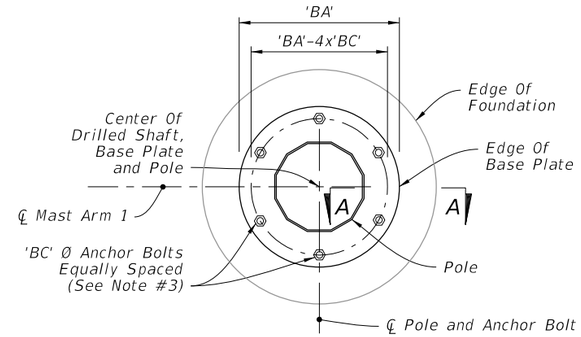

(6 Anchor Bolts)

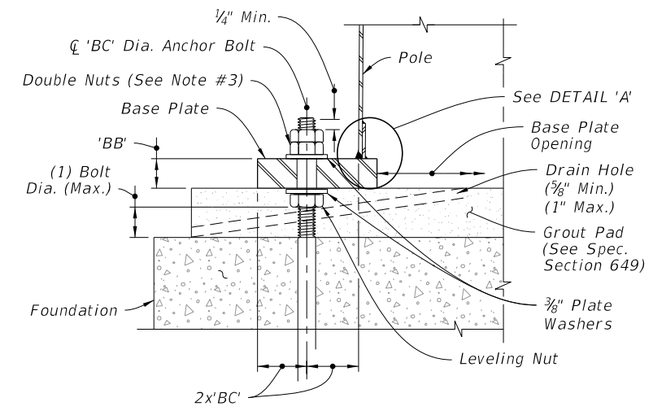

SECTION A-A

NOTES:

1. The Grout Pad diameter may be reduced where the footprint of the Grout Pad does not provide adequate clearance for the sidewalk and/or accessibility considerations.
2. See Index No. 17743 and the plans for actual quantity of bolts.
3. The top hex nut may be substituted by a ½" height 'jam' nut. Provide individual nut covers (not shown) for each bolt.

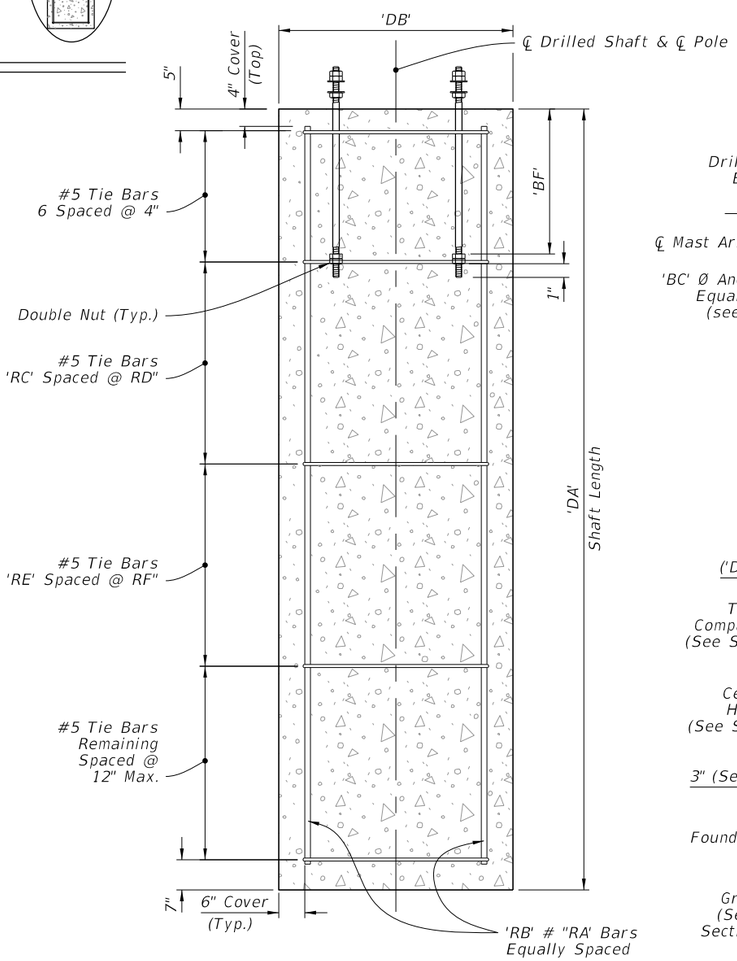

ELEVATION

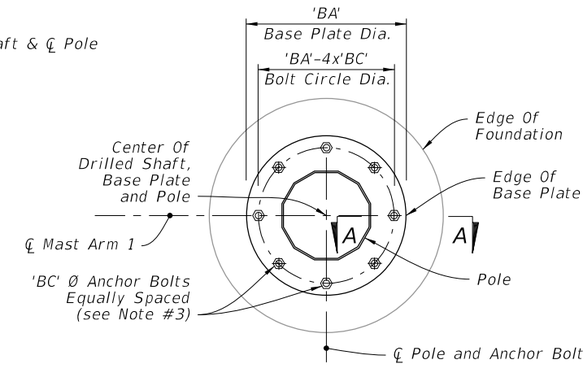

(8 Anchor Bolts)

PLAN

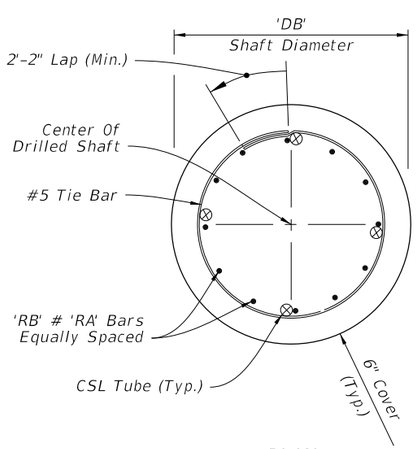

PLAN

FOUNDATION

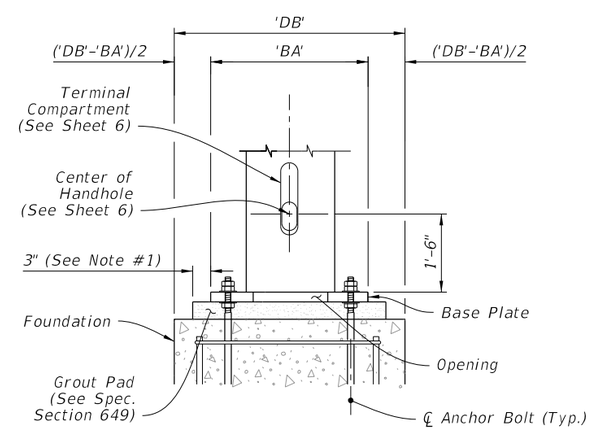

ELEVATION
(Back Face Shown)

BASE PLATE CONNECTION

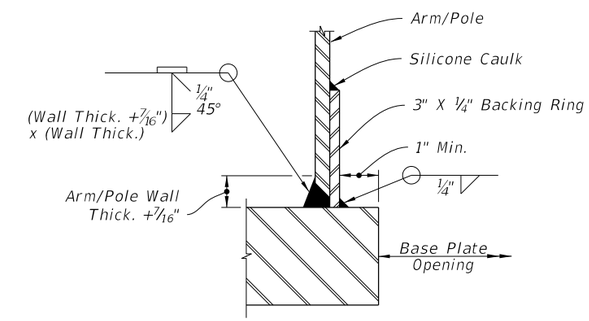

JOINT WELD DETAIL

DETAIL 'A'

FOUNDATION AND BASE PLATE DETAILS

LAST REVISION	REVISION	DESCRIPTION:			INDEX NO.	SHEET NO.
07/01/15			FDOT 2016 DESIGN STANDARDS	MAST ARM ASSEMBLIES	17745	2 of 6

6/18/2015 10:03:26 AM

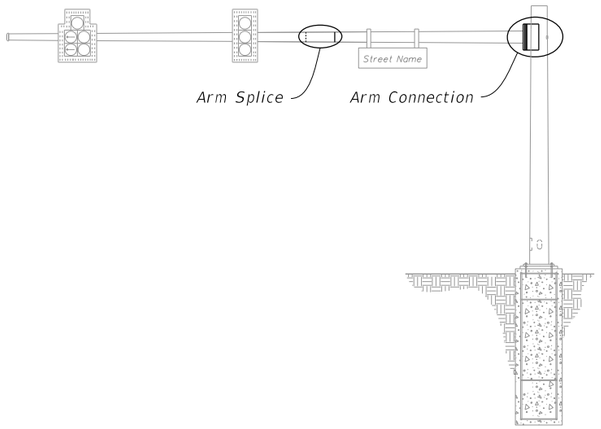

MAST ARM ASSEMBLY

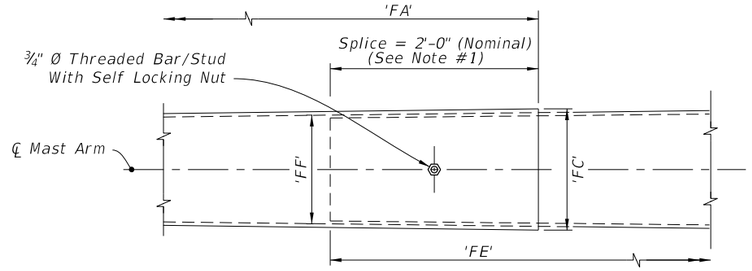

ARM SPLICE

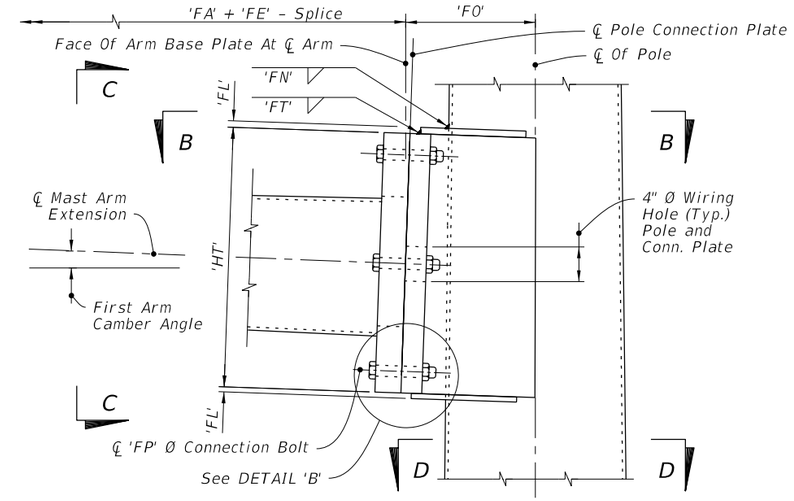

SINGLE ARM CONNECTION

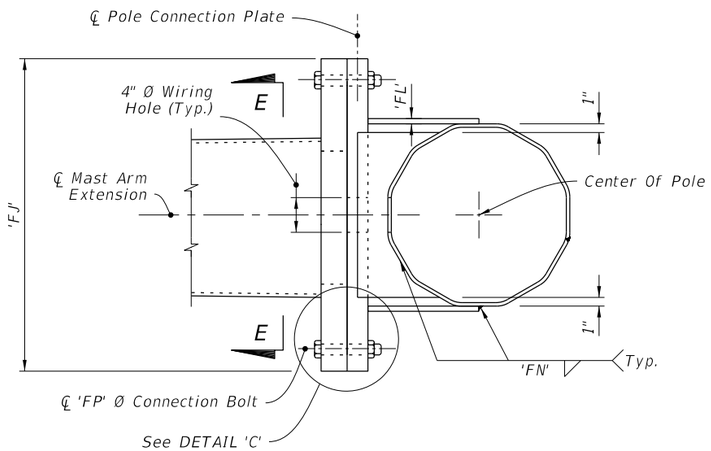

SECTION B-B

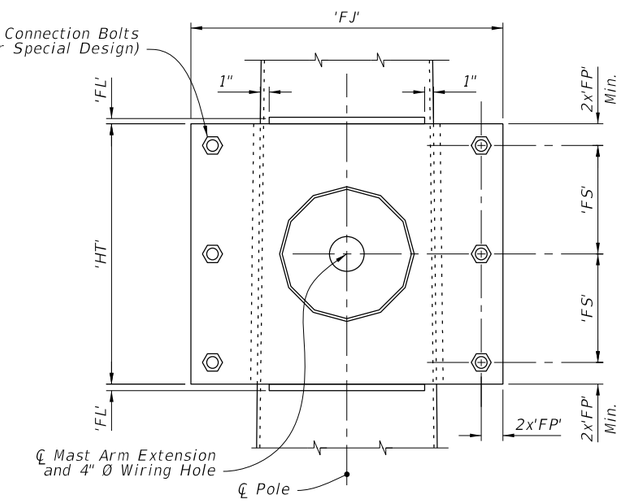

SECTION C-C

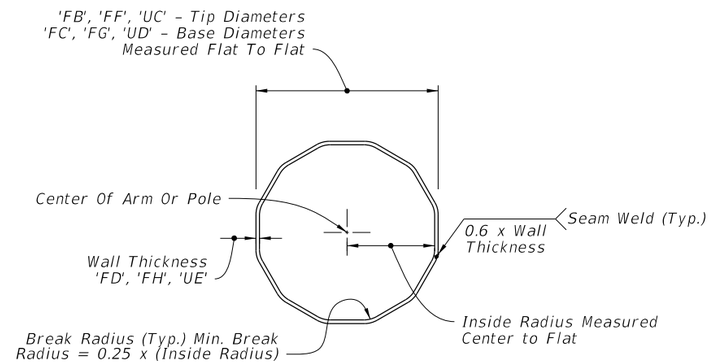

SECTION D-D

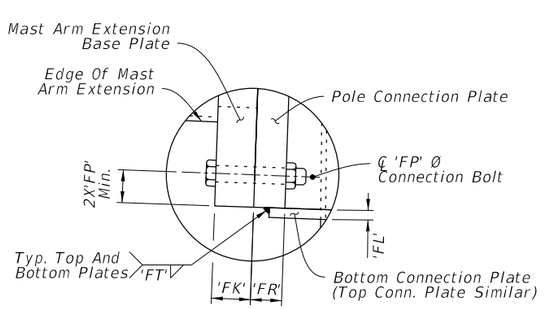

DETAIL 'B'

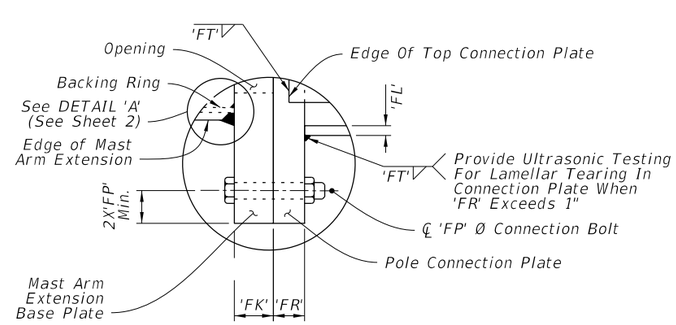

DETAIL 'C'

NOTE:

1. Install the 'Slip Joint' splice with a tight fit and no change in the Mast Arm taper due to the splice.
2. Details shown on this sheet are for 12 sided pole sections. However, sections with more than 12 sides and round sections are permitted provided outside diameter and wall thickness are not reduced.
3. Match mark the Arm and Connection Plates to ensure proper assembly.

SINGLE ARM CONNECTIONS & SPLICE DETAILS

LAST REVISION	REVISION	DESCRIPTION:			INDEX NO.	SHEET NO.
07/01/15			FDOT 2016 DESIGN STANDARDS	MAST ARM ASSEMBLIES	17745	3 of 6

6/18/2015 10:03:27 AM

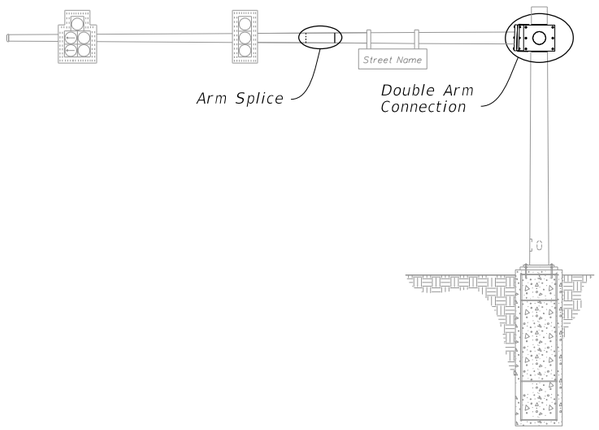

MAST ARM ASSEMBLY

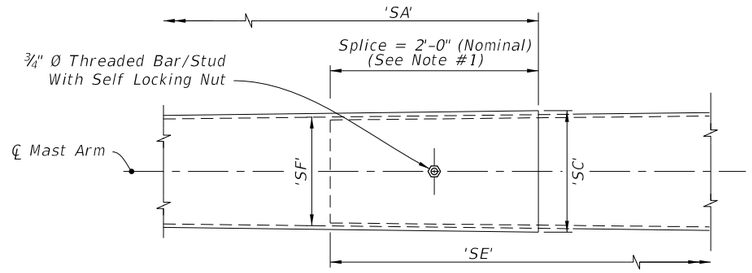

ARM SPLICE

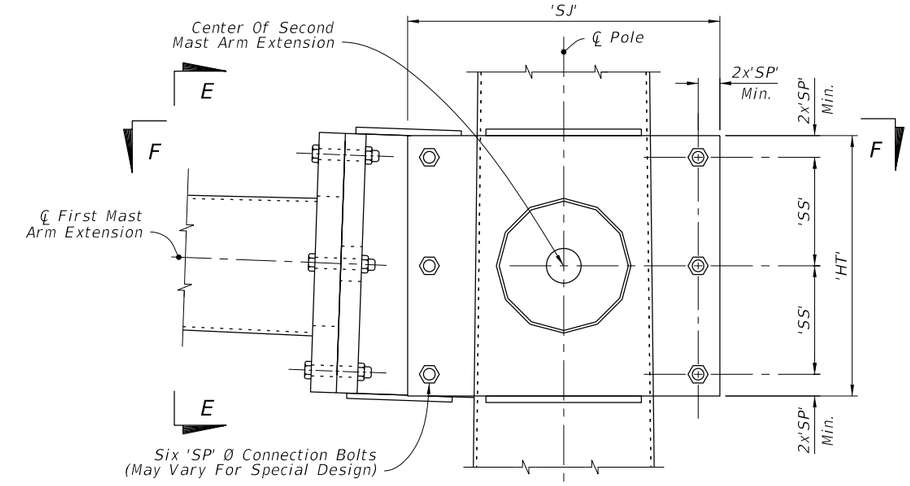

DOUBLE ARM CONNECTION

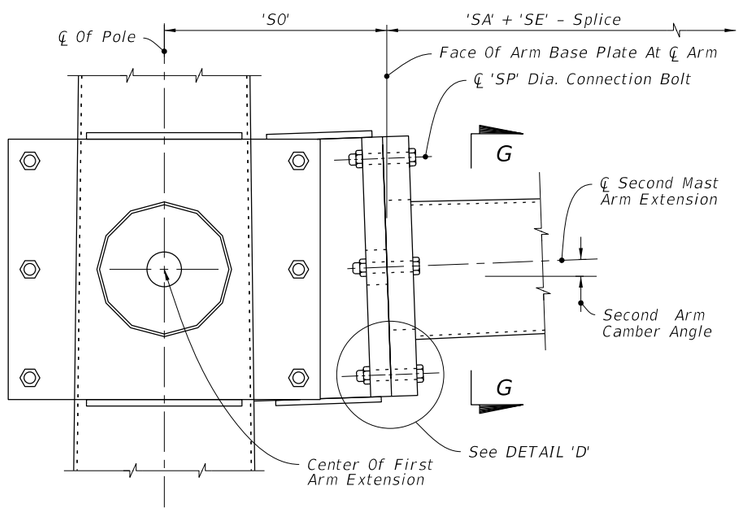

SECTION E-E

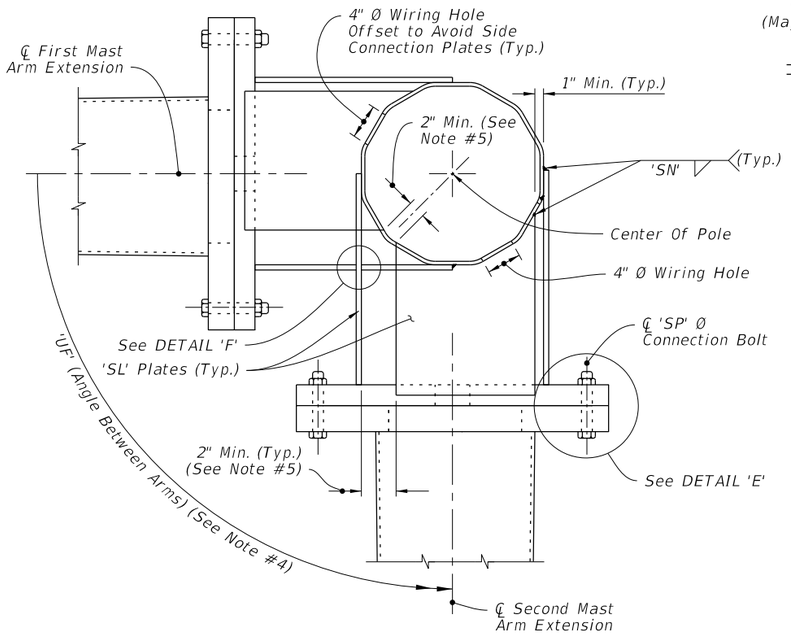

SECTION F-F

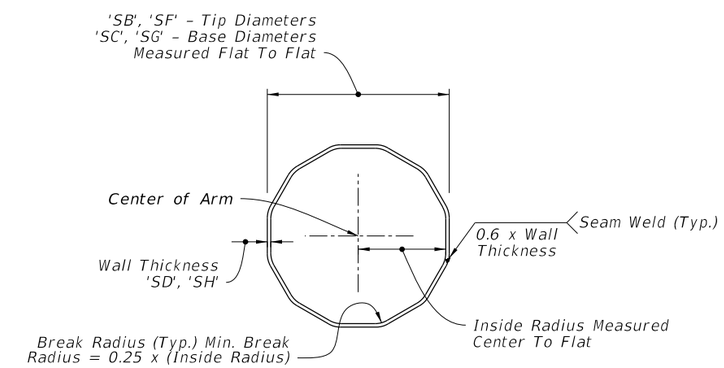

SECTION G-G

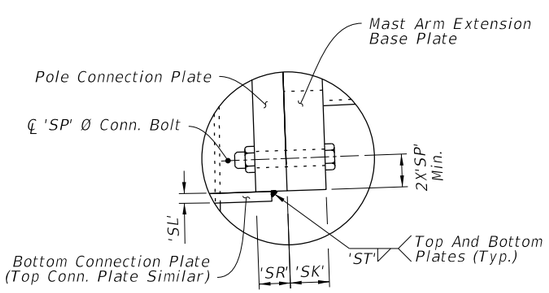

DETAIL 'D'

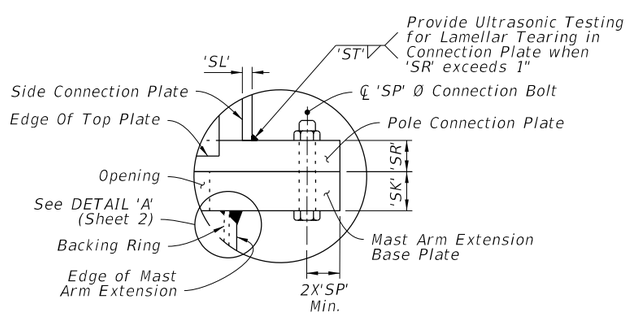

DETAIL 'E'

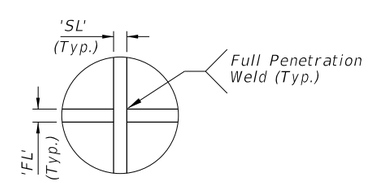

DETAIL 'F'

NOTE:

1. Install the 'Slip Joint' splice with a tight fit and no change in the Mast Arm taper due to the splice.
2. Details shown on this sheet are for 12 sided pole sections. However, sections with more than 12 sides and round sections are permitted provided outside diameter and wall thickness are not reduced.
3. Match mark the Arm and Connection Plates to ensure proper assembly.
4. 'UF' measured counter clockwise from ℄ First Mast Arm Extension.
5. Adjust width of top and bottom Connection Plates to maintain minimum clearance shown.

DOUBLE ARM CONNECTIONS & SPLICE DETAILS

6/18/2015 10:03:28 AM

LAST REVISION	REVISION	DESCRIPTION:			INDEX NO.	SHEET NO.
07/01/15			FDOT 2016 DESIGN STANDARDS	MAST ARM ASSEMBLIES	17745	4 of 6

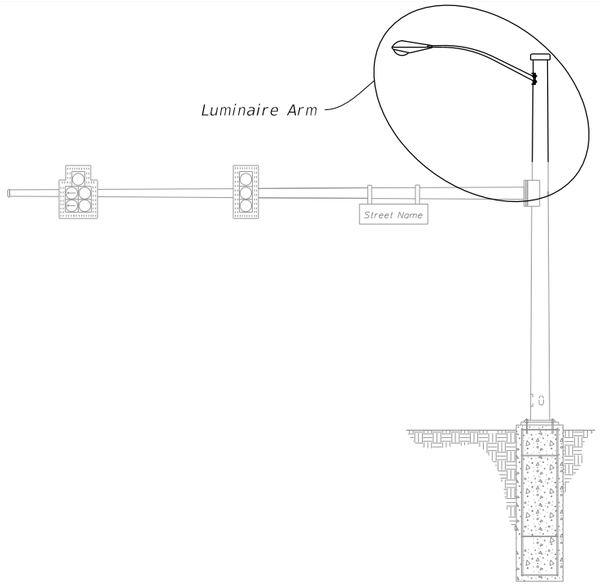

MAST ARM ASSEMBLY

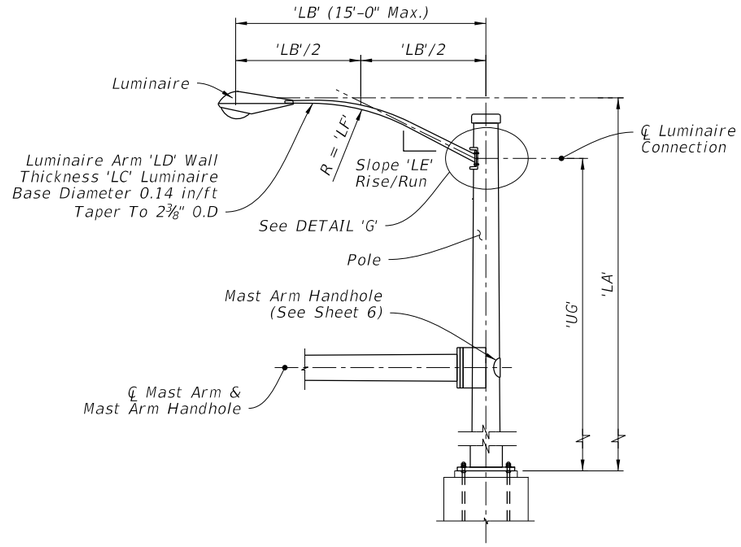

LUMINAIRE ELEVATION

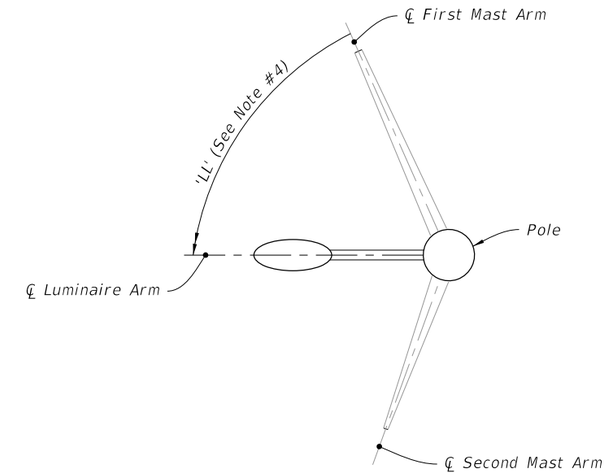

LUMINAIRE ORIENTATION

NOTES:

1. Luminaire type and luminaire length may be found in the Lighting Plans.
2. Align Luminaire Arm with Single Mast Arm or First Arm of Double Mast Arm unless indicated otherwise in the plans.
3. The fabricator may substitute a ½" thick bent plate with the same flange width, height, and length as the MC 10x33.6 Channel section.
4. 'LL' measure counter clockwise from First Mast Arm.

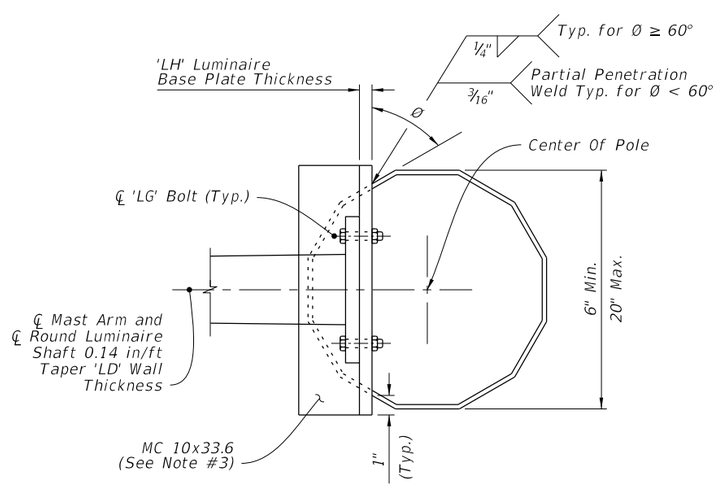

SECTION H-H

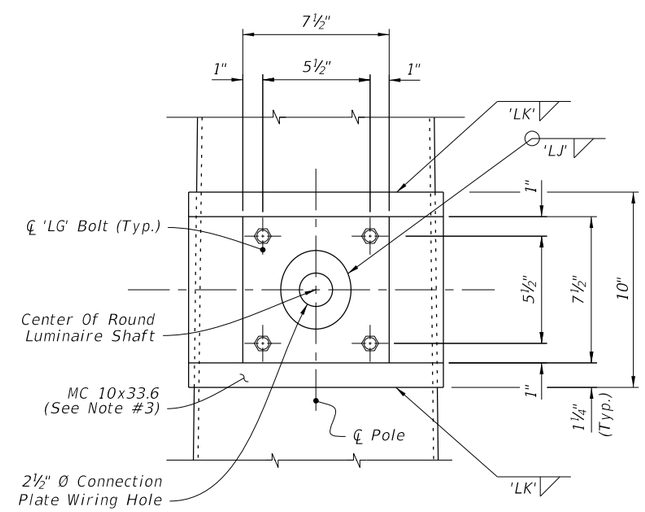

SECTION I-I

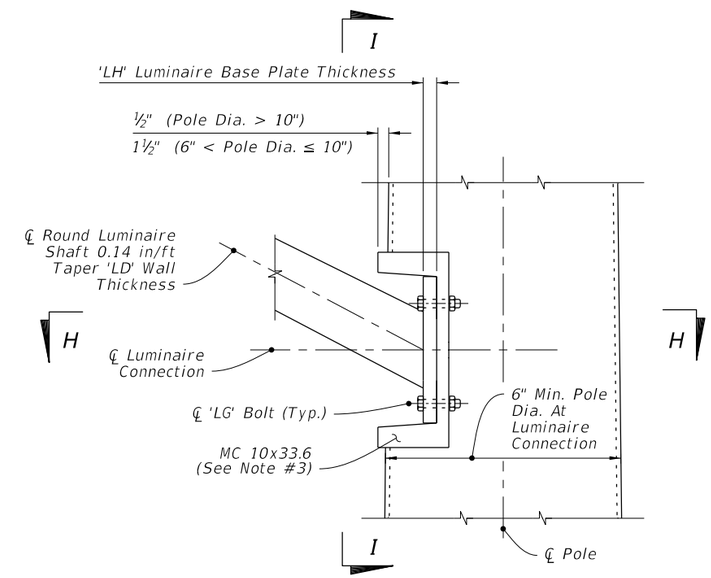

LUMINAIRE CONNECTION ELEVATION

DETAIL 'G'

LUMINAIRE ARM AND CONNECTION DETAILS

LAST REVISION	REVISION	DESCRIPTION:			INDEX NO.	SHEET NO.
07/01/15			FDOT 2016 DESIGN STANDARDS	MAST ARM ASSEMBLIES	17745	5 of 6

6/18/2015 10:03:28 AM

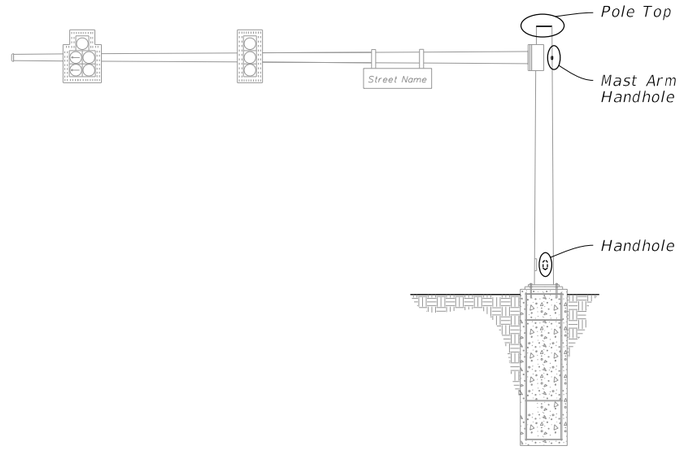

MAST ARM ASSEMBLY

NOTES:

1. Handhole covers may be omitted when Terminal Compartment is provided.
2. Terminal Compartment is optional. See Mast Arm Tabulation to see if required and for locations.
3. Terminal Compartment Frame Height 2'-0" minimum to 2'-6" maximum. Align bottom of Terminal Compartment a minimum of 1" below the bottom of the Handhole Frame.
4. Any combination of Option 'a' or 'b' may be used, provided both lifting and wiring is accommodated.

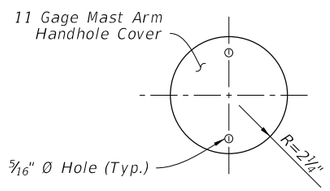

COVER

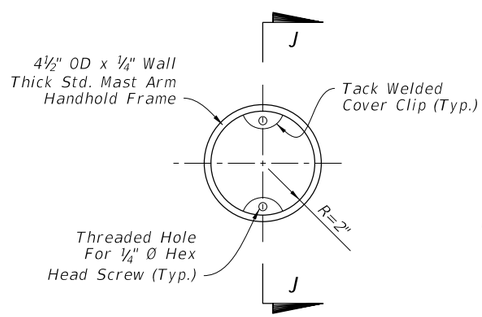

FRAME

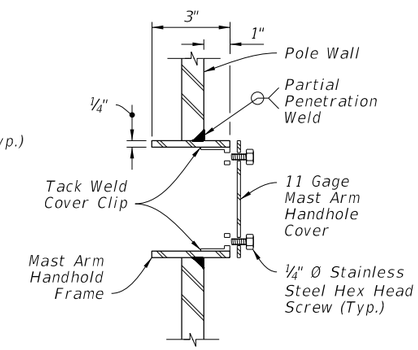

SECTION J-J

MAST ARM HANDHOLE

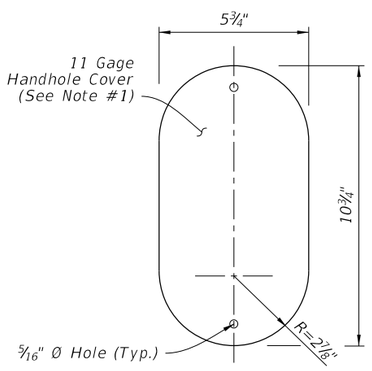

COVER

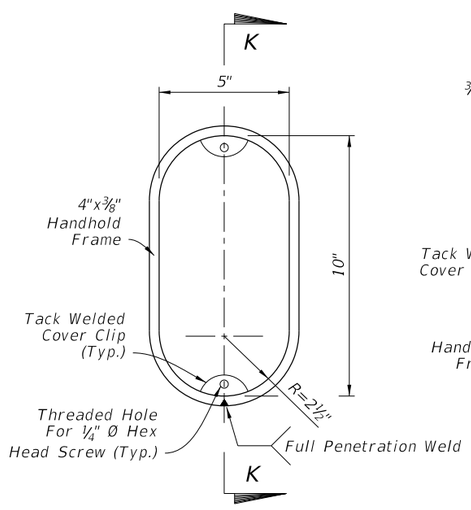

FRAME

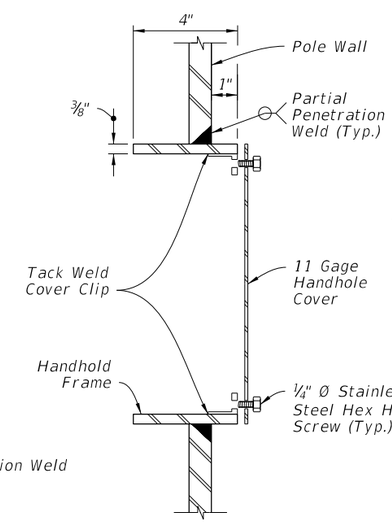

SECTION K-K
(Thru Handhole)

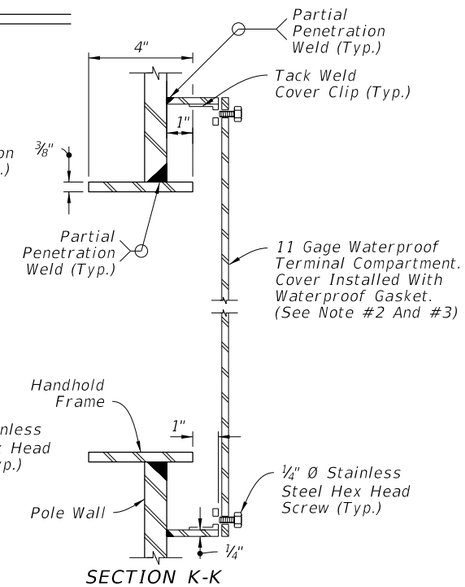

SECTION K-K
(Terminal Compartment)

HANDHOLE

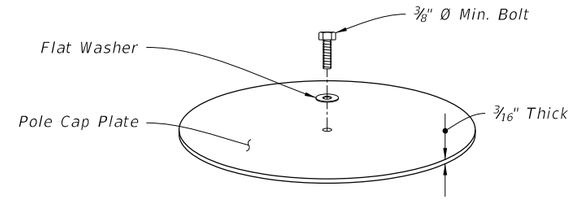

ISO VIEW
(Option 'a')

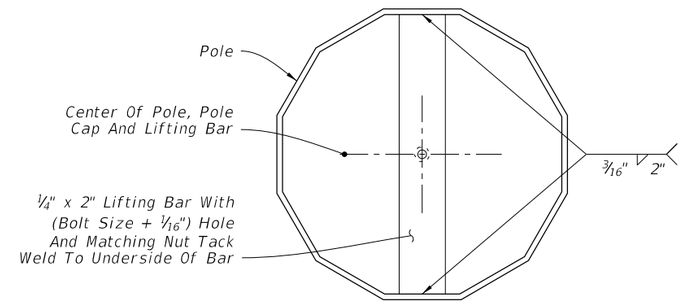

TOP VIEW
(Option 'a')

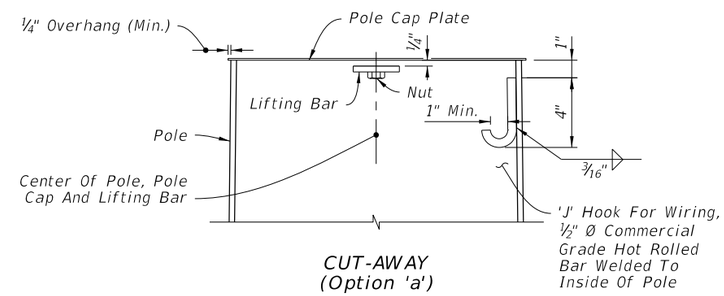

CUT-AWAY
(Option 'a')

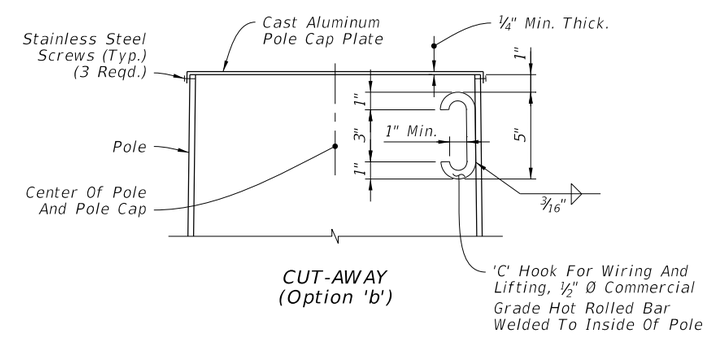

CUT-AWAY
(Option 'b')

POLE TOP

HANDHOLD AND POLE TOP DETAILS

LAST REVISION	REVISION	DESCRIPTION:			INDEX NO.	SHEET NO.
07/01/15			FDOT 2016 DESIGN STANDARDS	MAST ARM ASSEMBLIES	17745	6 of 6

6/18/2015 10:03:29 AM

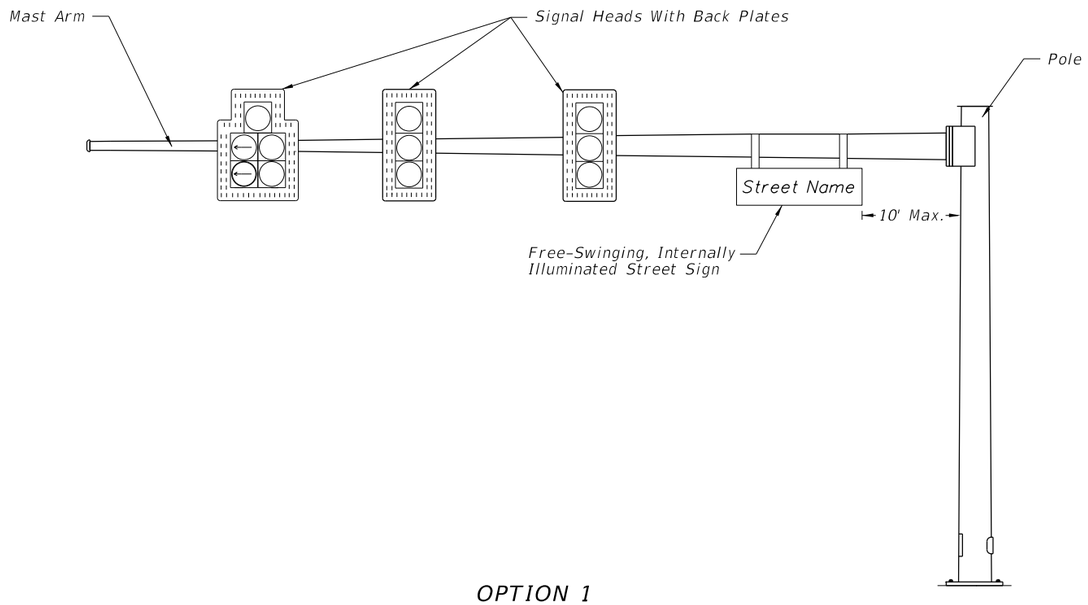

OPTION 1

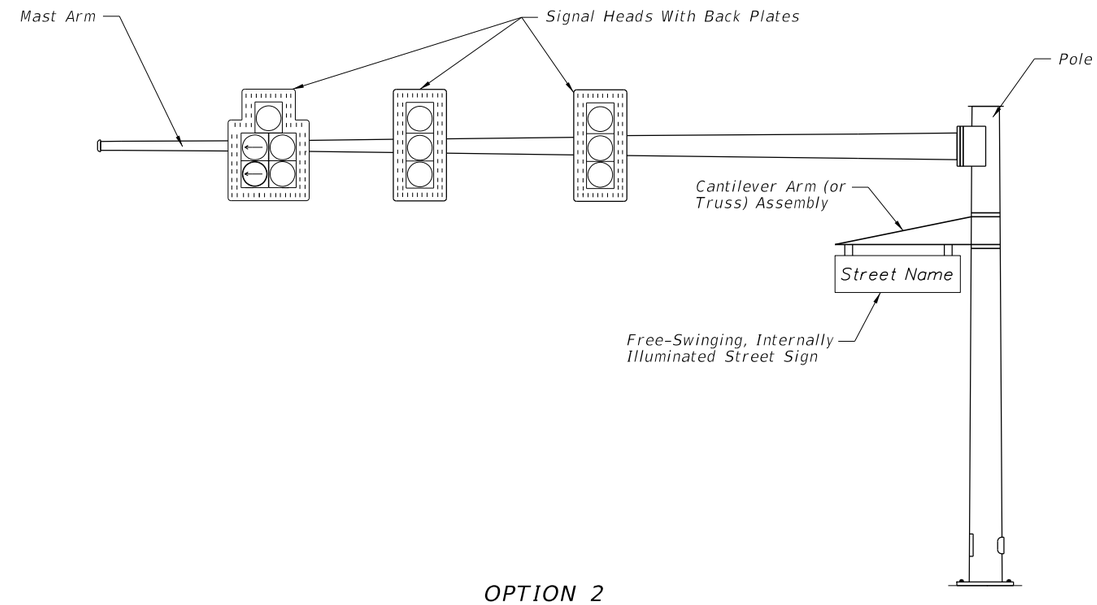

OPTION 2

MAST ARM ASSEMBLY

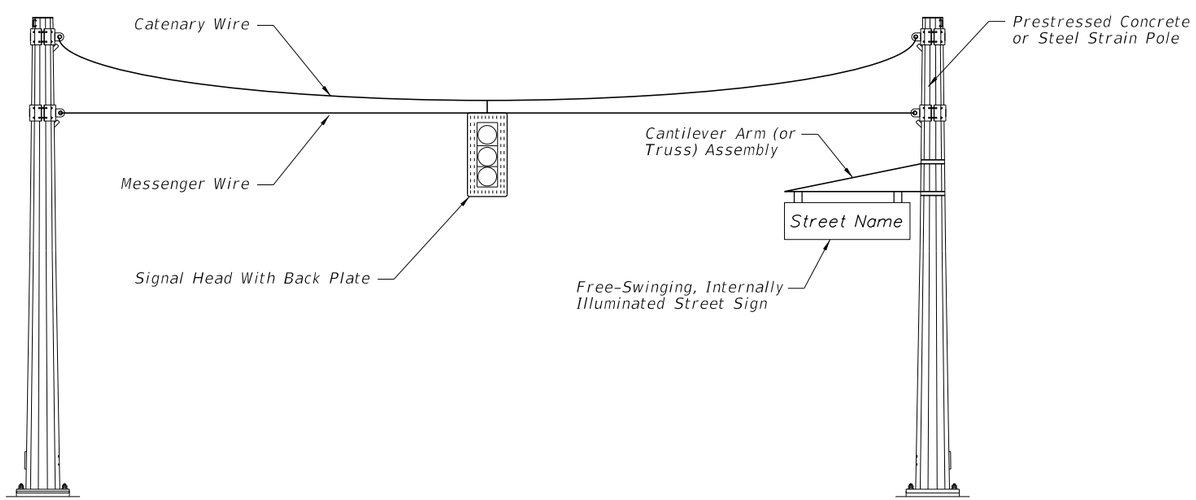

SPAN WIRE ASSEMBLY

NOTES:

1. Free-swinging, internally-illuminated street signs shall only be installed on the signal pole for span wire assemblies. For mast arm assemblies the street sign may be installed on the arm or pole.
2. Free-swinging, internally-illuminated street signs shall meet the requirements of Section 700 of the Standard Specifications for Road and Bridge Construction.
3. Pole attachments and cantilever arm (or truss) assemblies may be accepted by Contractor certification provided the signs being supported meet the weight and area limitations included in Section 700 for "Acceptance by Certification".
4. Pole attachments and cantilever arm (or truss) assemblies supporting signs not meeting the weight or area limitations included in Section 700 for "Acceptance by Certification" require the submittal of structural calculations and Shop Drawings that have been prepared by and sealed by the Specialty Engineer.

6/10/2015 10:16:02 AM

LAST REVISION	REVISION	DESCRIPTION:			INDEX NO.	SHEET NO.
07/01/14			FDOT 2016 DESIGN STANDARDS	FREE-SWINGING INTERNALLY-ILLUMINATED STREET SIGN ASSEMBLIES	17758	1 of 1

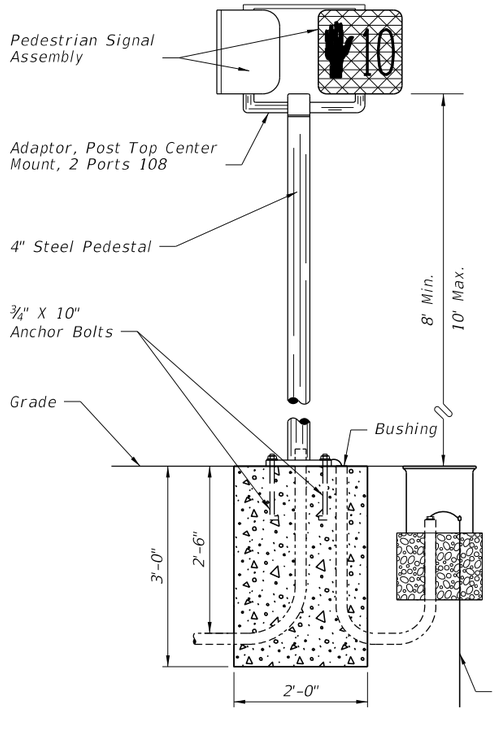

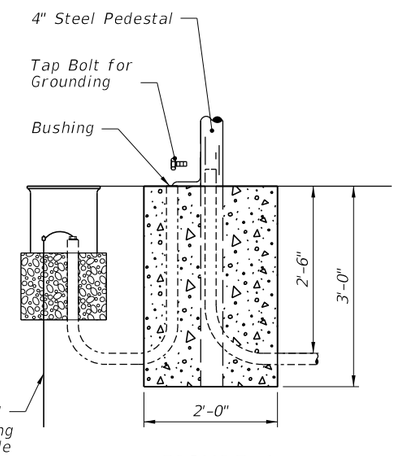

FIGURE A

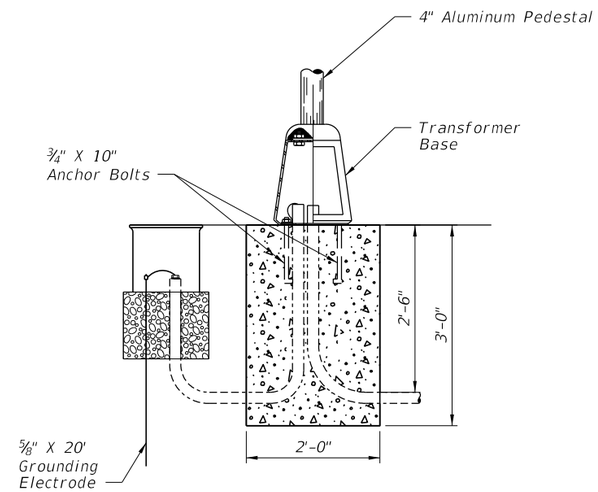

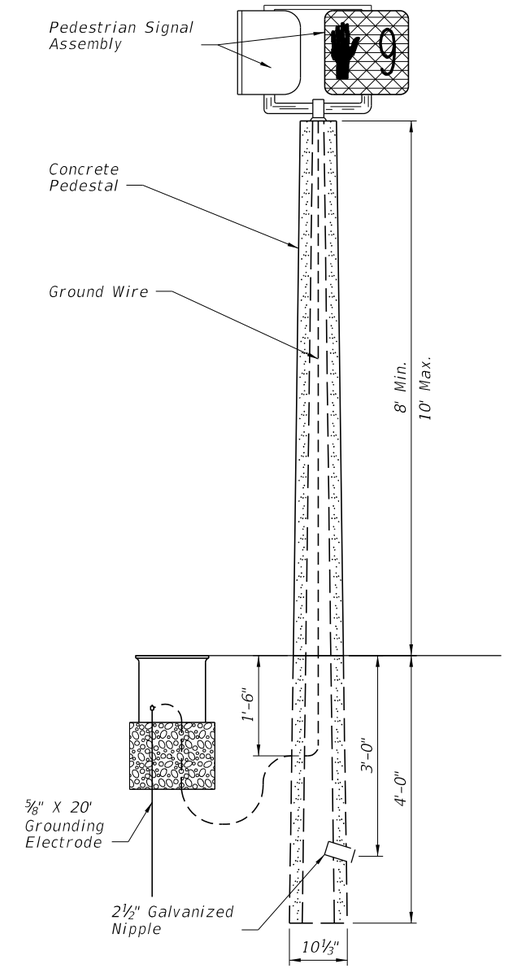

FIGURE B

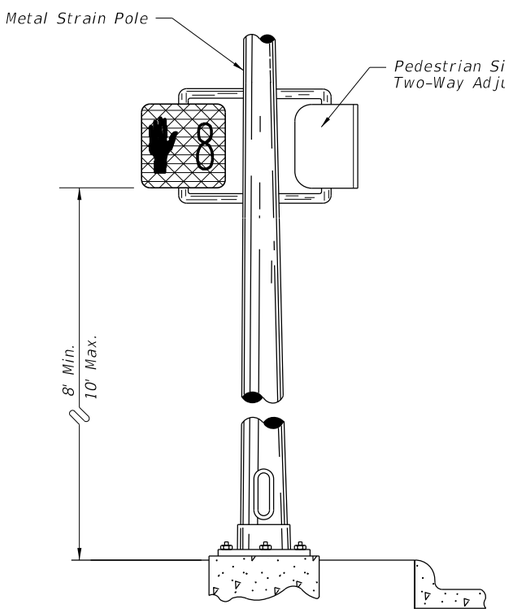

FIGURE C

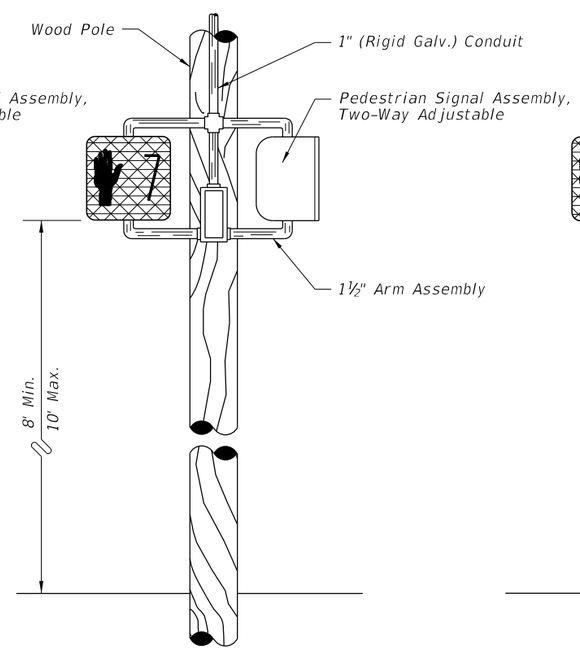

FIGURE D

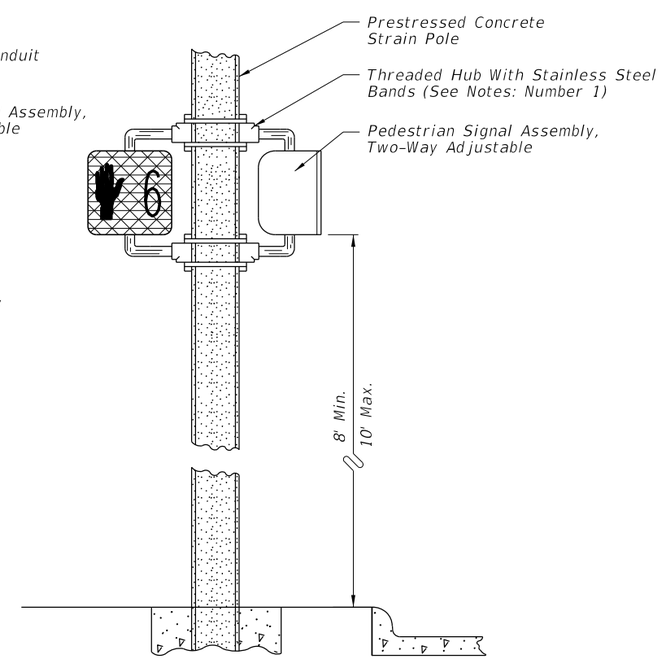

FIGURE E

Notes:

1. As an option, the contractor will be allowed to install pedestrian signals on concrete poles and pedestals with the use of lead anchors (two bolts same size per hub) in lieu of the stranded steel bands.
2. Holes drilled or punched in metal poles or pedestals shall be thoroughly reamed, cleaned of all burrs and covered with two (2) coats of zinc rich paint as specified in the standard specifications for road and bridge, construction. Grommets or bushings shall be installed in holes.
3. Meet all grounding requirements of Section 620 of the Standard Specifications.

7:17:34 AM

7/20/2015

LAST REVISION	REVISION	DESCRIPTION:			INDEX NO.	SHEET NO.
07/01/14			FDOT 2016 DESIGN STANDARDS	PEDESTRIAN CONTROL SIGNAL INSTALLATION DETAILS	17764	1 of 1

TWISTED PAIR AND LOOP LEAD-IN INSTALLATION WITH CURB & GUTTER

ALTERNATIVE 1

Drill A Hole Through The Curb At The Point Which The Required Saw-Cut Depth Is Obtained Just Prior To Cutting The Top Inside Edge Of The Curb. Slide A Section Of Flexible Conduit At Least 6" Into The Hole From The Back Side Of The Curb But Not Within 2" Of The Top Of The Hole. The Conduit Shall Fit Snug Within The Drilled Hole. Fill The Top Of The Hole With Loop Sealant To The Level Of The Curb Surface. A Nonmetallic Material Should Be Used To Prevent Excessive Loop Sealant From Entering The Flexible Conduit.

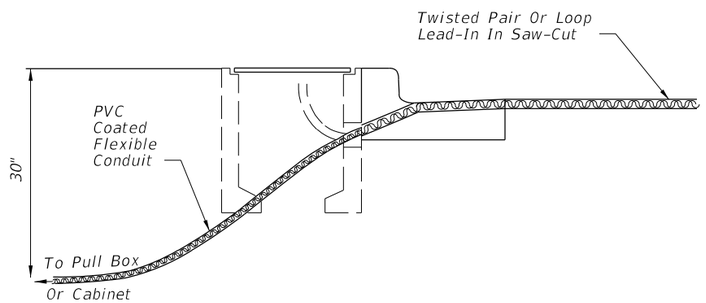

ALTERNATIVE 2

Drill A Hole ½" To 1" Larger In Diameter Than The Rigid Conduit To Be Used Through The Roadway Asphalt (Or Concrete) Surface And Base At An Appropriate Angle To Intercept The Trench Or Pull Box Hole. Place A Predetermined Length Of Rigid Conduit In The Hole And Drive The Conduit Into The Trench Or Hole. Install A Molded Bushing (Nonmetallic) On The Roadway End Of The Rigid, Conduit. The Top Of The Rigid Conduit Shall Be Approximately 2" Below The Roadway Surface. Fill The Hole With Loop Sealant To The Level Of The Roadway Surface. A Nonmetallic Material Should Be Used To Prevent Excessive Loop Sealant From Entering The Rigid Conduit.

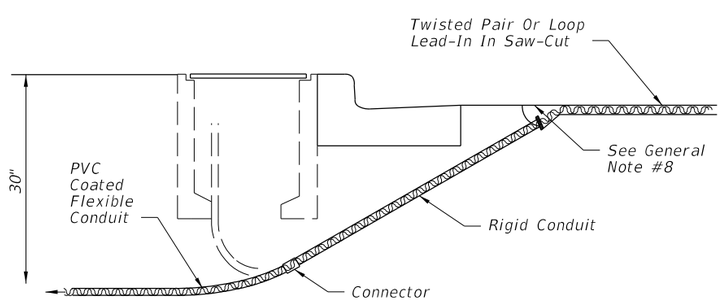

NOTE:
Other alternatives may be approved by the State Traffic Operations Engineer.

TWISTED PAIR AND LOOP LEAD-IN INSTALLATION WITHOUT CURB & GUTTER

Cut A Slot In The Edge Of The Roadway Of Sufficient Size And Depth To Snugly Place The End Of The Flexible conduit. The End Of The Conduit Shall Be At Least 6" Into The Roadway And approximately 2" Below The Top Of The Roadway Surface. The Departure Angle Of The Conduit From The Roadway Shall Be 30° To 45°.

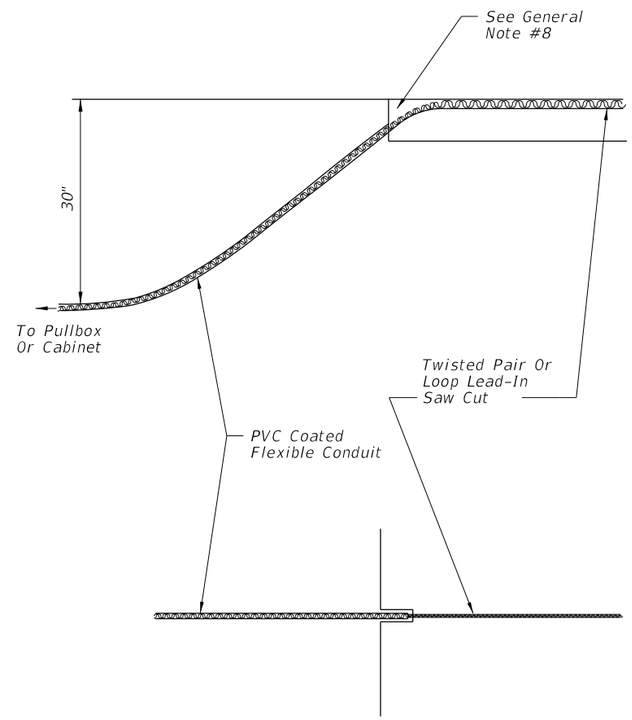

NOTE:
Other alternatives may be approved by the State Traffic Operations Engineer.

GENERAL NOTES

1. If the loop lead-in is 75' or less from the edge of the loop detector to controller cabinet, continue the twisted pair to the cabinet. If the loop lead-in is greater than 75' continue the twisted pair to the specified pullbox, splice to shielded lead-in wire and continue to the controller cabinet.
2. The width of all saw cuts shall be sufficient to allow unforced placement of loop wires or lead-in cables into the saw cut. The depth of all saw cuts, except across expansion joints, shall be 3" standard with a maximum of 4".
3. On resurfacing or new roadway construction projects, the loop wires and lead-in cables may be installed in the asphalt structural course prior to the placement of the final asphalt wearing course. The loop wires and lead-in cables shall be placed in a saw cut in the structural course. The depth of the cables below the top of the final surface shall comply with note 2.
4. A nonmetallic hold down material shall be used to secure loop wires and lead-ins to the bottom of saw-cuts. Hold down material shall be placed at approximately 12" intervals around loops and 24" intervals on lead-ins.
5. The minimum distance between the twisted pairs of loop lead-in wire is 6" from the loop to 12" from the pavement edge or curb.
6. Splice Connections in pull boxes with UL listed, watertight, insulated enclosures. Place one enclosure over the end of each conductor and place a third enclosure over the exposed end of the shielded cable.
7. As an alternate, a larger diameter enclosure that will accommodate both the splices of the conductors and the exposed end of the shielded cable may be used.
8. The maximum area of asphalt to be disturbed shall be 6"x 6". This area shall be restored as directed by the Engineer.

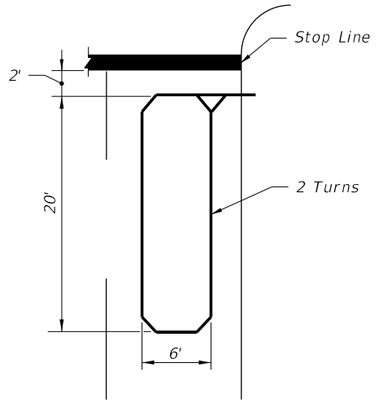

TYPE A

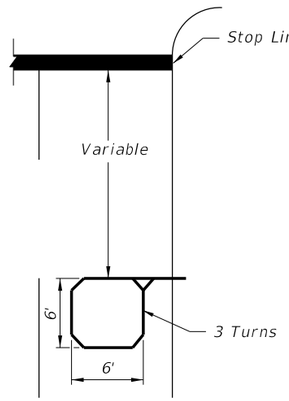

TYPE B

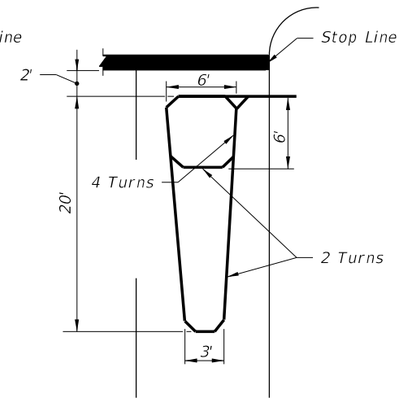

TYPE C

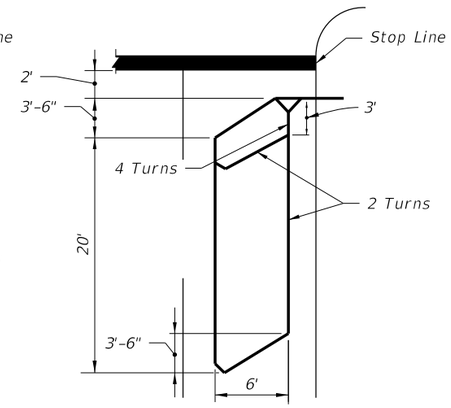

TYPE D

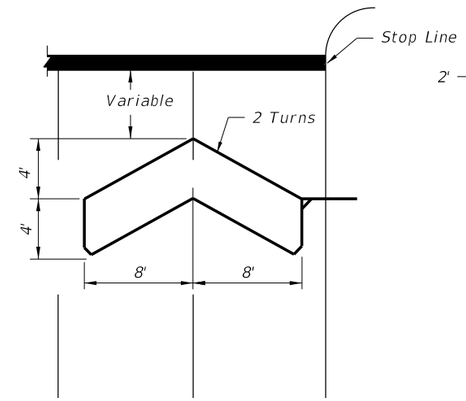

TYPE E

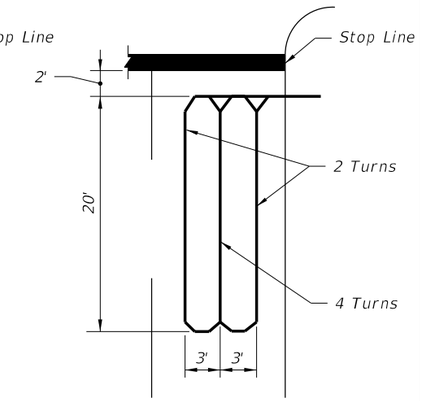

TYPE F

Note:
Loop conductors must follow saw-cut to bottom forming slack section at joint.

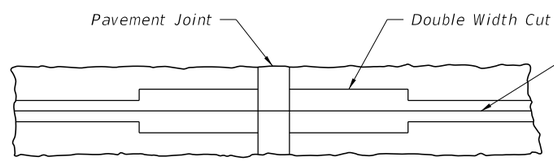

PLAN

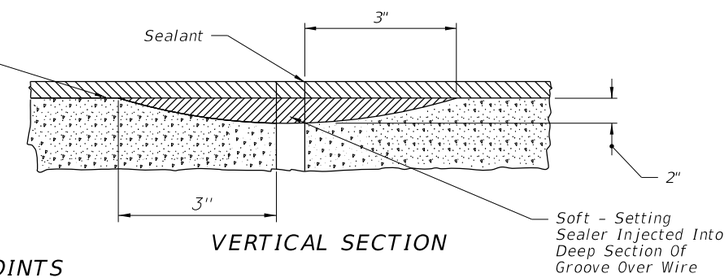

VERTICAL SECTION

CONCRETE PAVEMENT EXPANSION JOINTS

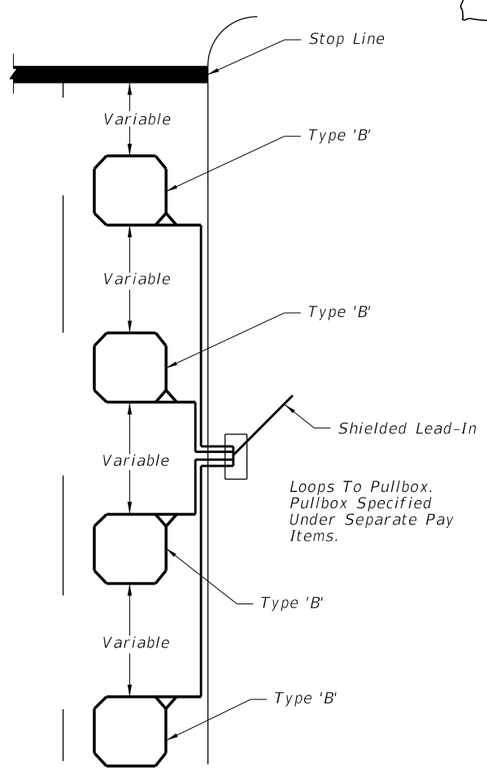

TYPE G

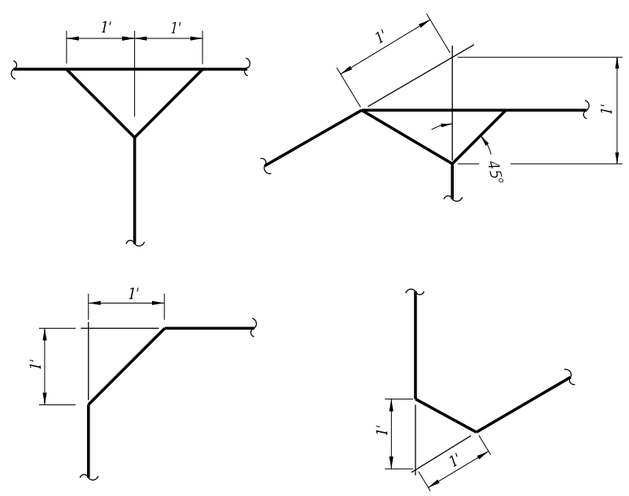

LOOP CORNER AND LEAD-IN DETAILS

Notes:

1. The "number of turns" indicated at the specified point on the loop refers to the number of passes of loop wires which are placed in the saw-cut forming the complete loop.
2. Loop types or details not drawn to scale.
3. Loop Types are centered in a single lane except Type E which is centered on two lanes.
4. The number of individual loops in the Type G loop may vary up to a maximum of four (4).
5. Lead-in may be connected to either end of loop.
6. The leading edge of loop Types A,C,D,& F may extend past the stop line a maximum of 10'. The length of these loops may be extended to a maximum of 60'. Each intersection should be individually designed and if the modifications noted above is required it must be noted or detailed in tne plans.
7. Loop lead-in wires should not be installed in the same pull box with signal power cable.

6/10/2015 10:18:44 AM

LAST REVISION	REVISION	DESCRIPTION:			INDEX NO.	SHEET NO.
07/01/00			FDOT 2016 DESIGN STANDARDS	VEHICLE LOOP INSTALLATION DETAILS	17781	2 of 2

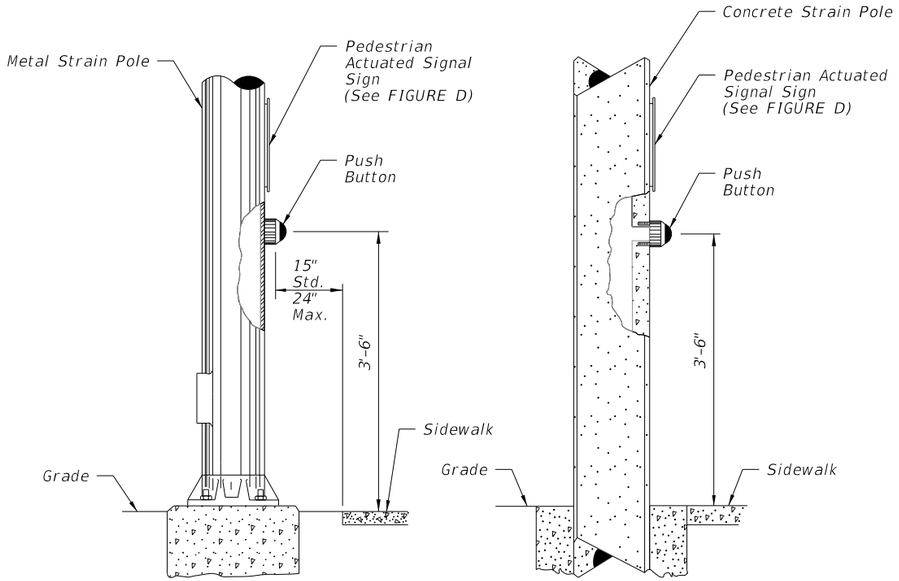

FIGURE A
POLE MOUNTED
DETECTOR STATION

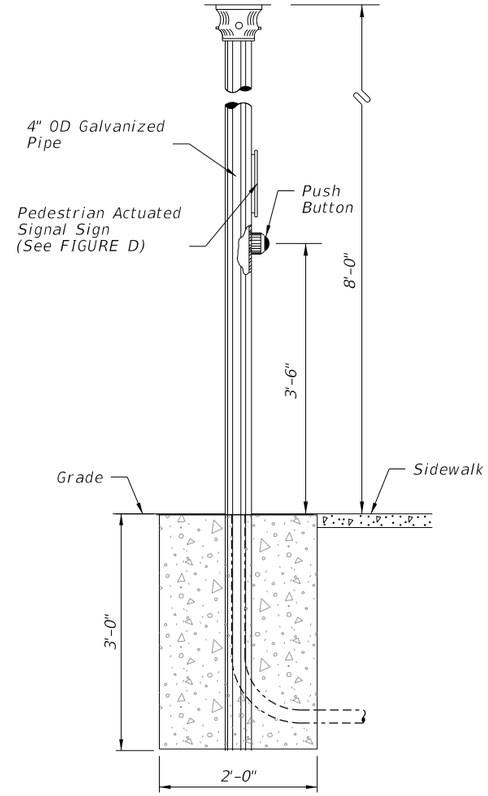

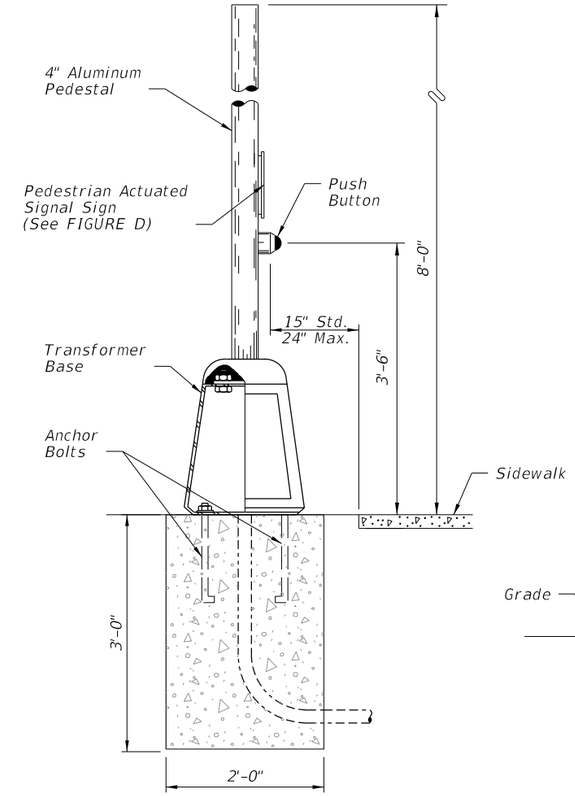

FIGURE B
PEDESTAL STATION
DETECTOR STATION

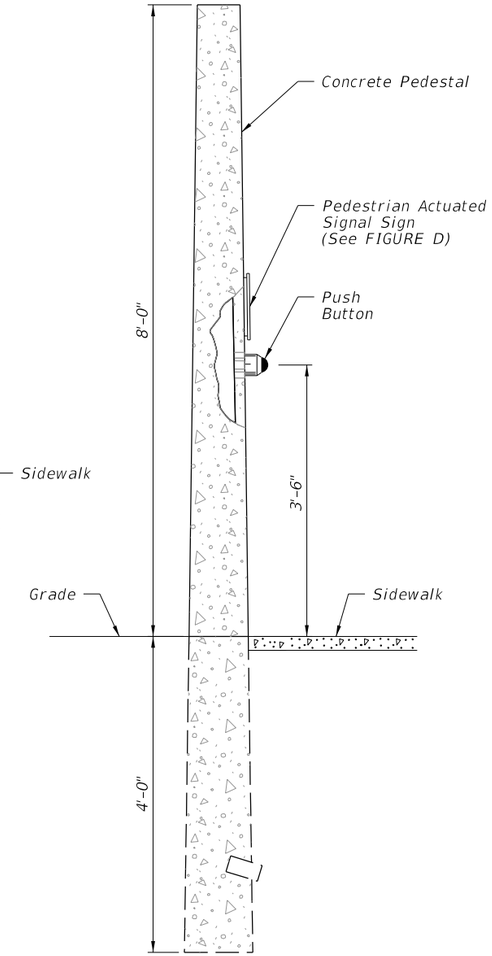

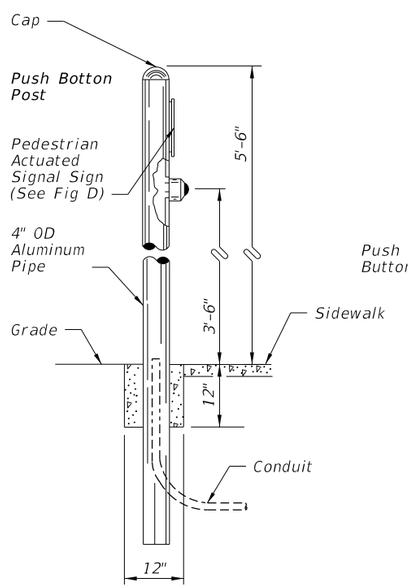

FIGURE C
POST DETECTOR STATION
DETECTOR STATION

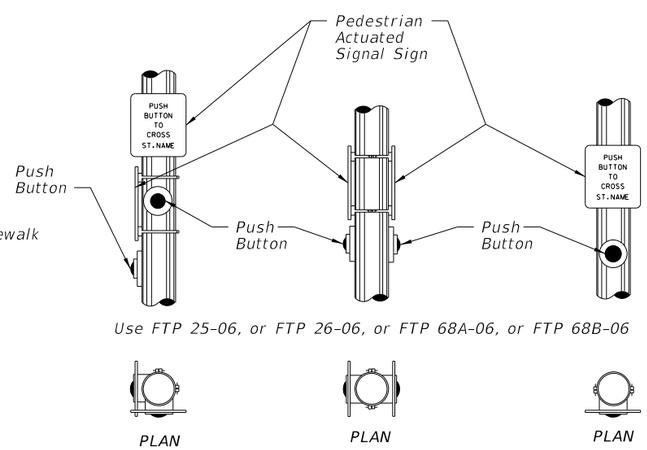

FIGURE D

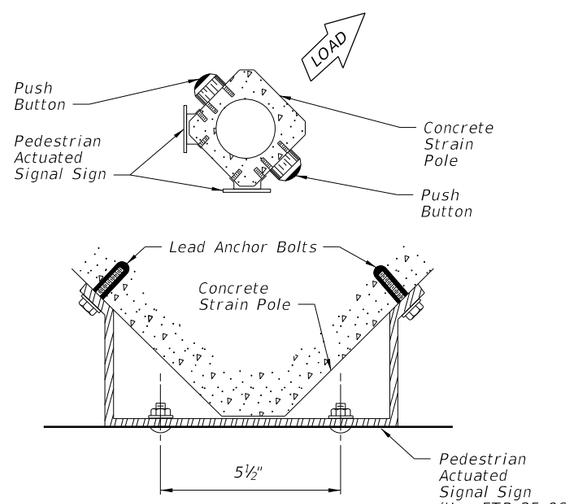

FIGURE E

Notes:

1. Payment for sign is included in the price for the pedestrian detector.
2. Signs shall be mounted above detectors, explaining their purpose and use.
3. The positioning of pedestrian push button should clearly indicate which crosswalk signal is actuated by each push button.
4. Push buttons and signs are to be mounted in accordance with Standard Specifications, section 665.
5. Meet all grounding requirements of Section 620 of the Standard Specifications.
6. A 30"X48" maneuvering area is required on each push button.

Note To Designers:

The designer should ensure the distance to the Push Button in FIGURE A & B is maintained. This distance can vary depending on post or pedestal type or whether a frangible base is used and sidewalk configuration. This is specified to meet Americans with Disabilities Act.

6/10/2015 10:19:09 AM

LAST REVISION	REVISION	DESCRIPTION:			INDEX NO.	SHEET NO.
07/01/15			FDOT 2016 DESIGN STANDARDS	PEDESTRIAN DETECTOR ASSEMBLY INSTALLATION DETAILS	17784	1 of 2

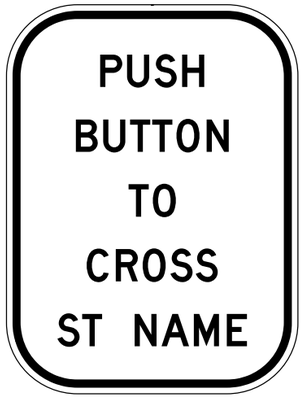

FTP-25-06

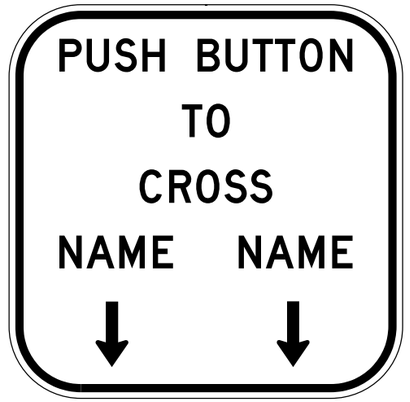

FTP-26-06

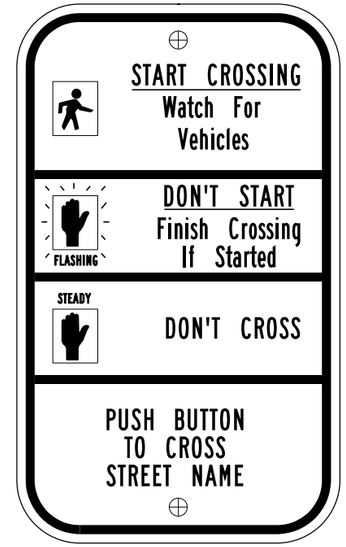

FTP-68A-06

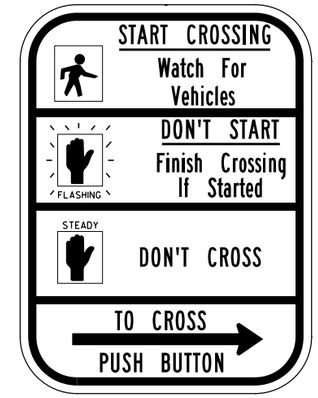

R10-3b
(Use Only for Case I)

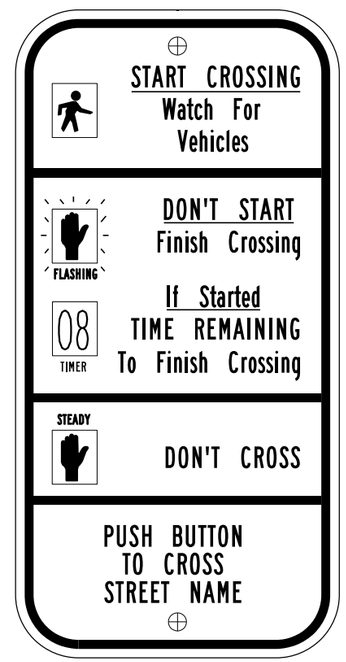

FTP-68B-06

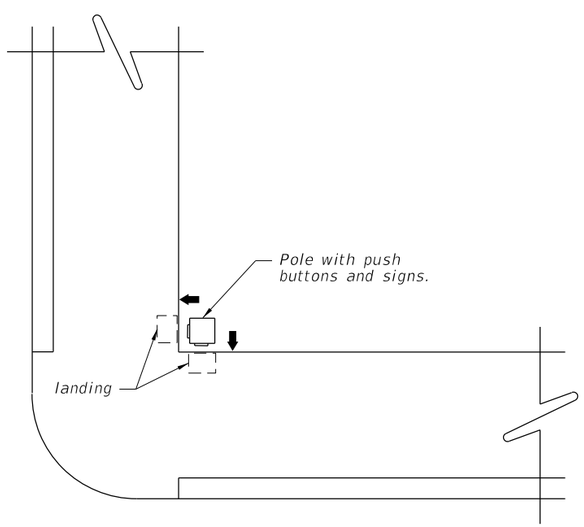

CASE I
POLE PARALLEL TO CURBLINE
ALTERNATE TO FIGURE E

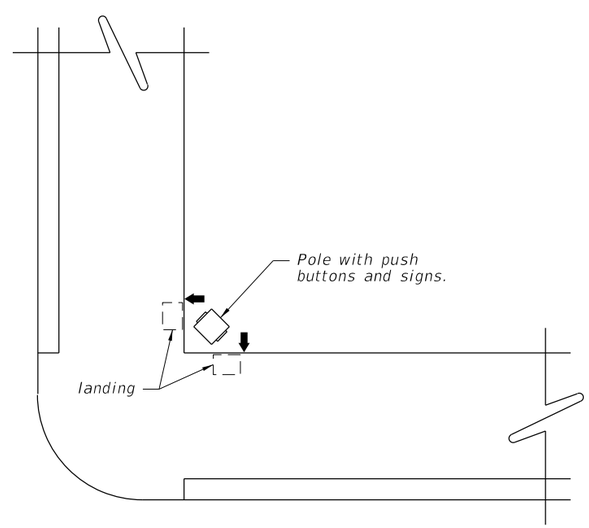

CASE II
POLE DIAGONAL TO CURBLINE
ALTERNATE TO FIGURE E

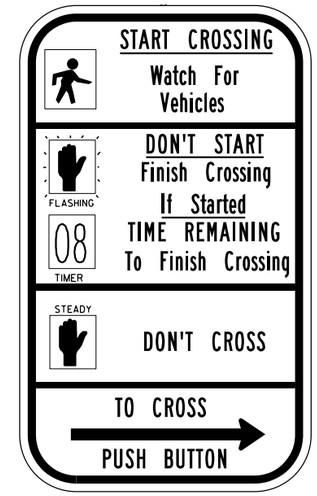

R10-3e
(Use Only for Case I)

NOTE:
1. Refer to the MANUAL ON UNIFORM TRAFFIC CONTROL DEVICES figure 2B-26 Pedestrian Signs, The STANDARD HIGHWAY SIGNS MANUAL (English) Sign R10-3b for Text Size, Spacing and Symbol size. Also see DESIGN STANDARDS Index 17355 for details of FTP signs.

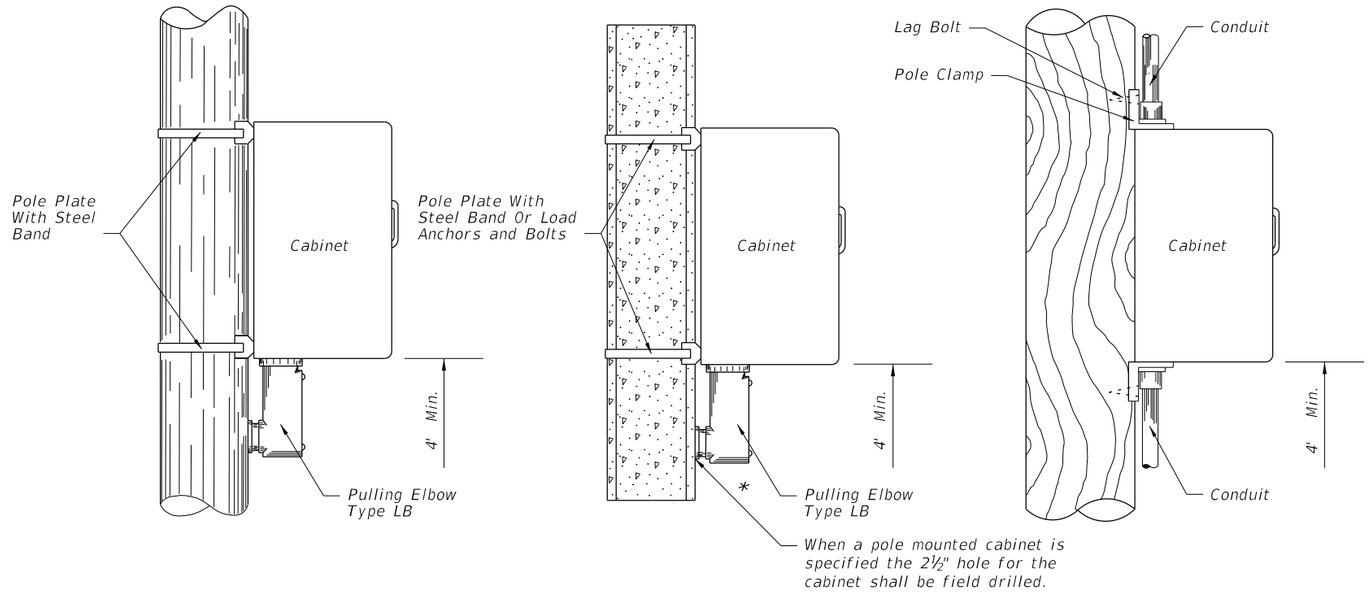

METAL POLE

CONCRETE POLE

WOOD POLE

POLE MOUNTED CABINET

Liquidtight flexible conduit is approved for use from the electrical disconnect to the cabinet when both are installed on the same pole.

* If holes for cabinet mounting require relocation, original holes shall be filled in with concrete or covered with a noncorrosive cover plate.

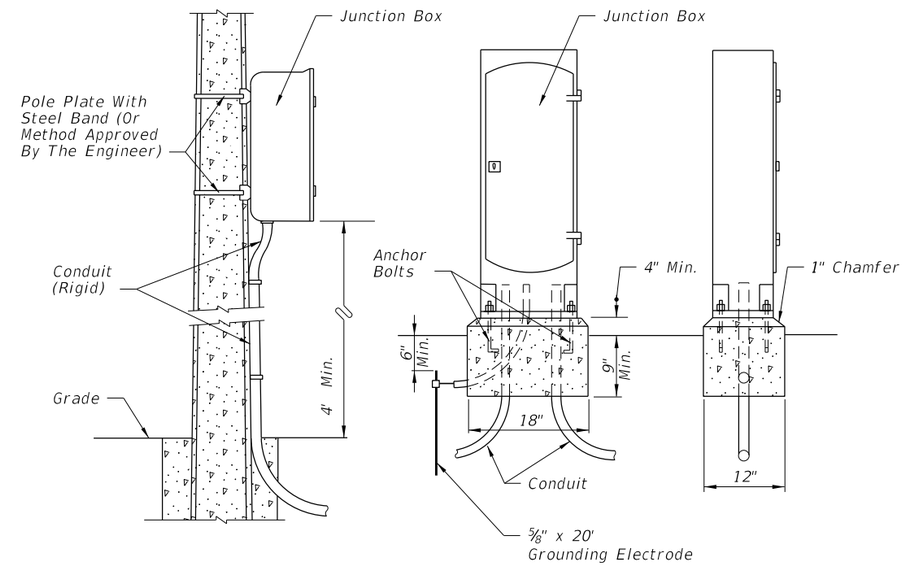

POLE MOUNTED

BASE MOUNTED

INTERCONNECT JUNCTION BOX

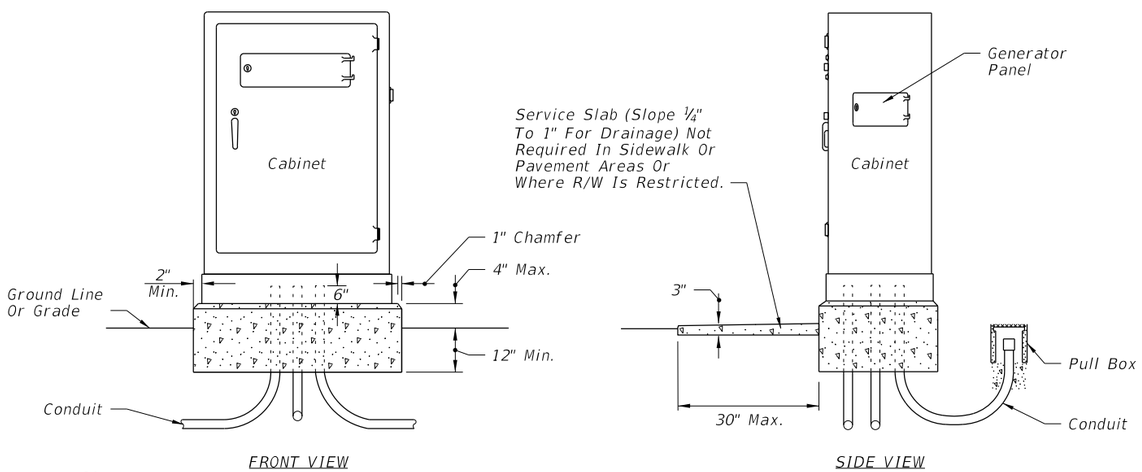

Notes:

1. The number, size and orientation of conduit sweep will vary according to site condition or locations. Two spare 2" PVC conduits shall be provided in all bases. The spares shall exit in the direction of the center rear of the cabinet base, into a pullbox and capped with a weathertight fitting. If obstructions prevent the spare conduit from exiting to the rear, or the rear of the cabinet is located on the R/W line, a side exit of the spare conduits will have to be approved by the project engineer. All spare conduit sweeps shall be capped with a weatherproof fitting.
2. Meet all grounding rquirements of the Standard Specifications 620.
3. New Controller Cabinet installation shall meet the requirements of the Standard Specifications 676.

NEW CONTROLLER CABINET

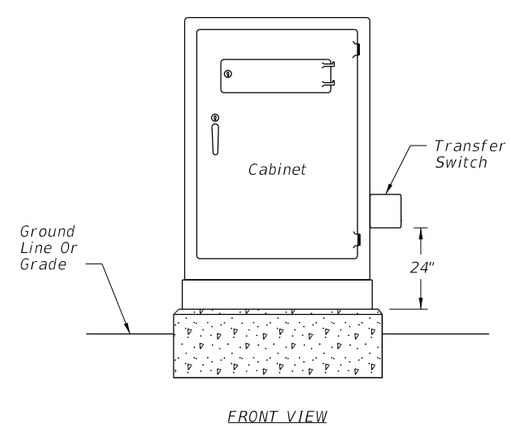

Notes:

1. Existing controller cabinets to be retrofitted shall meet the requirements of the Standard Specifications 678.
2. The signalized intersection controller cabinet retrofit installation procedures are located at: http://www.dot.state.fl.us/TrafficOperations/Doc_Library/Doc_Library.shtm for Generator Power for Signalized Intersection

EXISTING CONTROLLER CABINET

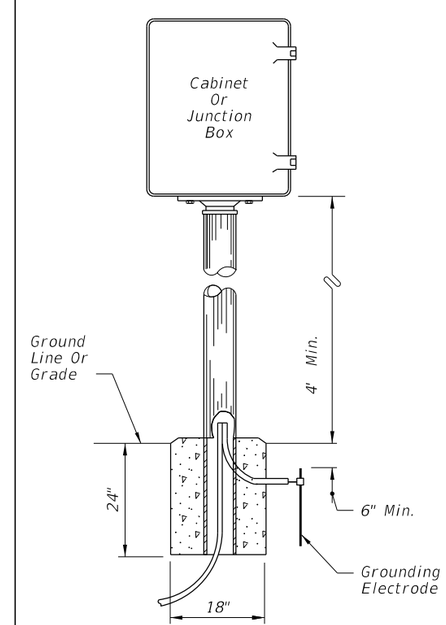

PEDESTAL MOUNTED

10:31:31 AM 6/10/2015

LAST REVISION	REVISION	DESCRIPTION:			INDEX NO.	SHEET NO.
12/15/14			FDOT 2016 DESIGN STANDARDS	CABINET INSTALLATION DETAILS	17841	1 of 1

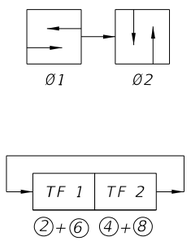

SOP 1

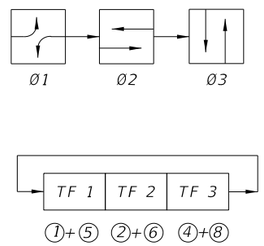

SOP 2

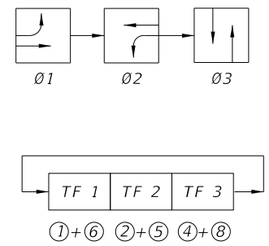

SOP 3

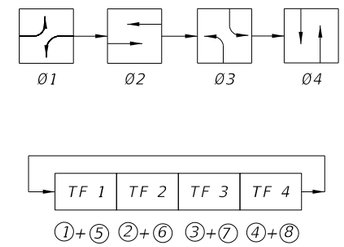

SOP 4

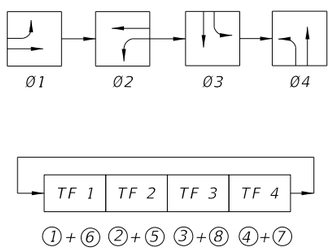

SOP 5

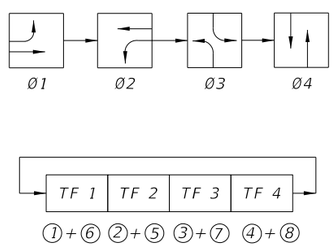

SOP 6

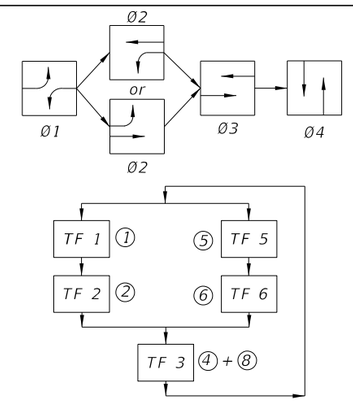

SOP 7

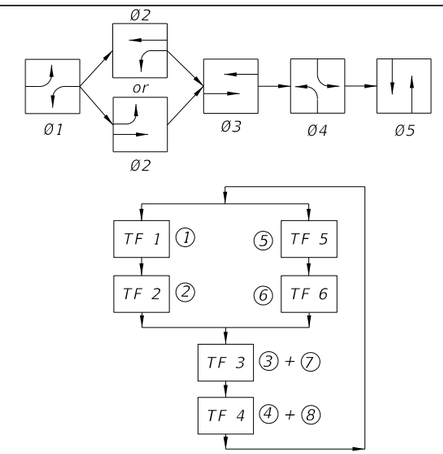

SOP 8

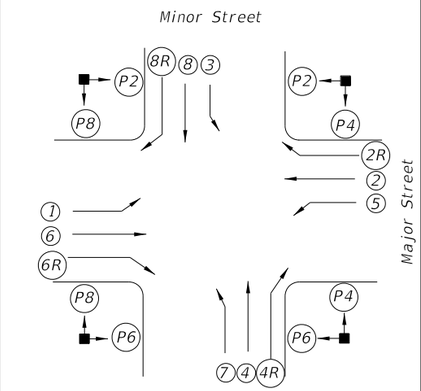

SIGNALIZED INTERSECTION

Vehicle movements & signal head number assignments are not directionally oriented but shall maintain their relative orientation about the intersection (I.E., movements 7 and 4 are always to the right of movements 1 and 6 etc.).

LEGEND

- (X) Vehicle Movement Number
- (PX) Pedestrian Movement Number
- TF X Timing Function Number
- ØX Phase Number
- Green Arrow (Left or Right)
- Red Arrow
- Yellow Arrow

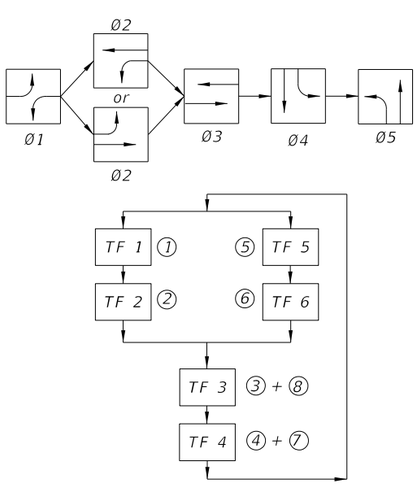

SOP 9

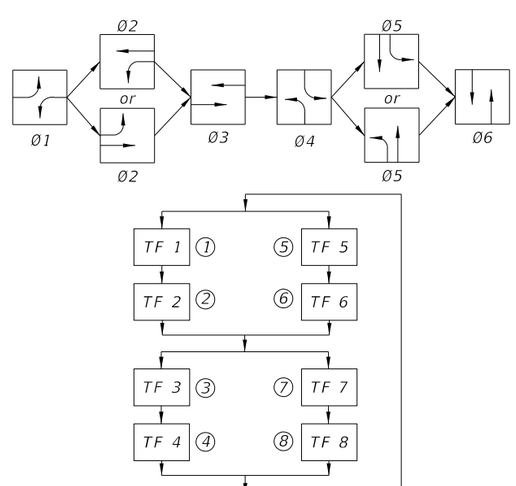

SOP 10

SIGNAL CLEARANCE TABLE

(Blank Indicates No Clearance Required)

SIGNAL INDICATIONS — To \ From	R	Red Arrow	G		Green Arrow	Walk	WALK	DONT WALK
R			Y		Yellow Arrow	Y		
Red Arrow			Y		Yellow Arrow	Y		
G					Yellow Arrow			
Green Arrow								
Walk								
WALK								
DONT WALK							Flash DONT WALK	

6/10/2015 10:32:22 AM

LAST REVISION	REVISION	DESCRIPTION:			INDEX NO.	SHEET NO.
07/01/05			FDOT 2016 DESIGN STANDARDS	STANDARD SIGNAL OPERATING PLANS	17870	1 of 2

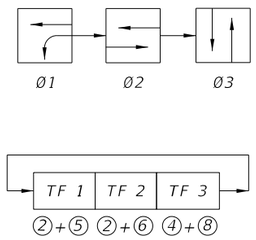

SOP 11

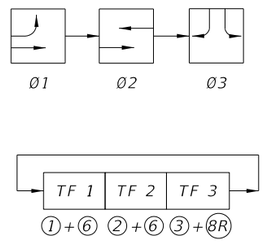

SOP 12

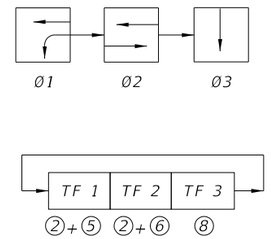

SOP 13

(ONE- WAY STREET INTERSECTION)

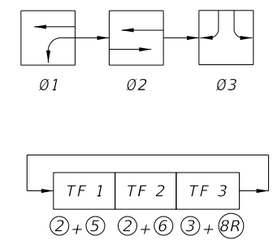

SOP 14

(DIAMOND INTERCHANGE OPERATION)

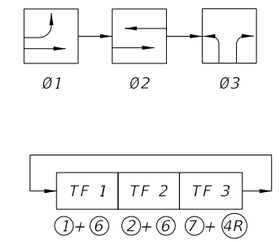

SOP 15

(DIAMOND INTERCHANGE OPERATION)

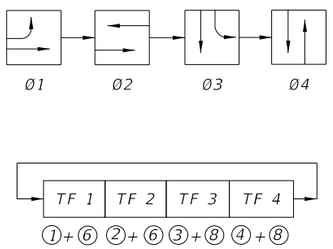

SOP 16

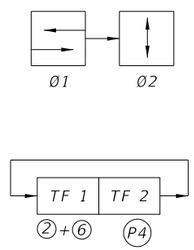

SOP 17

(MIDBLOCK)

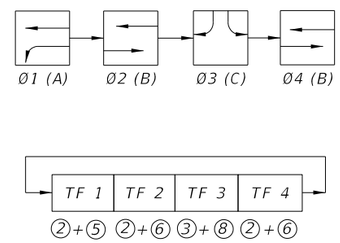

NOTE:
Only Ø2 Or Ø4 Used, Not Both To Obtain ABC, Or ACB Operation.

SOP 18

(DIAMOND INTERCHANGE OPERATIONS)

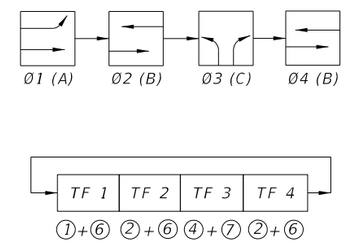

NOTE:
Only Ø2 Or Ø4 Used, Not Both To Obtain ABC, Or ACB Operation.

SOP 19

(DIAMOND INTERCHANGE OPERATIONS)

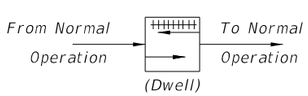

POP 1

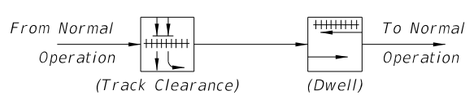

POP 2

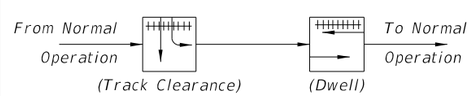

POP 3

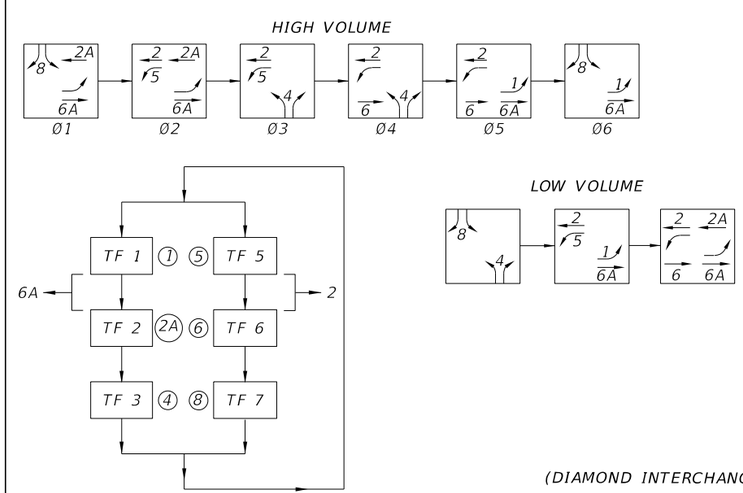

SOP 20

(DIAMOND INTERCHANGE OPERATIONS)

LAST REVISION	REVISION	DESCRIPTION:			INDEX NO.	SHEET NO.
07/01/00			FDOT 2016 DESIGN STANDARDS	STANDARD SIGNAL OPERATING PLANS	17870	2 of 2

6/10/2015 10:32:23 AM

The Distance Is Measured Along Right Edge Of Pavement From RR Stop Bar To Sign Advance Warning Sign.

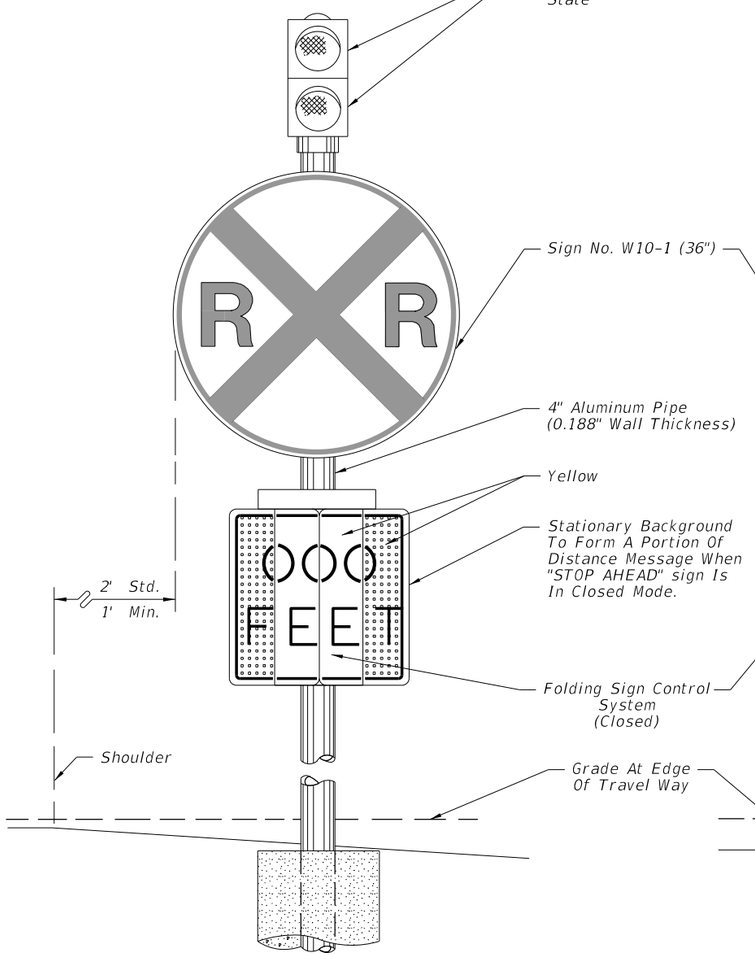

FRONT VIEW

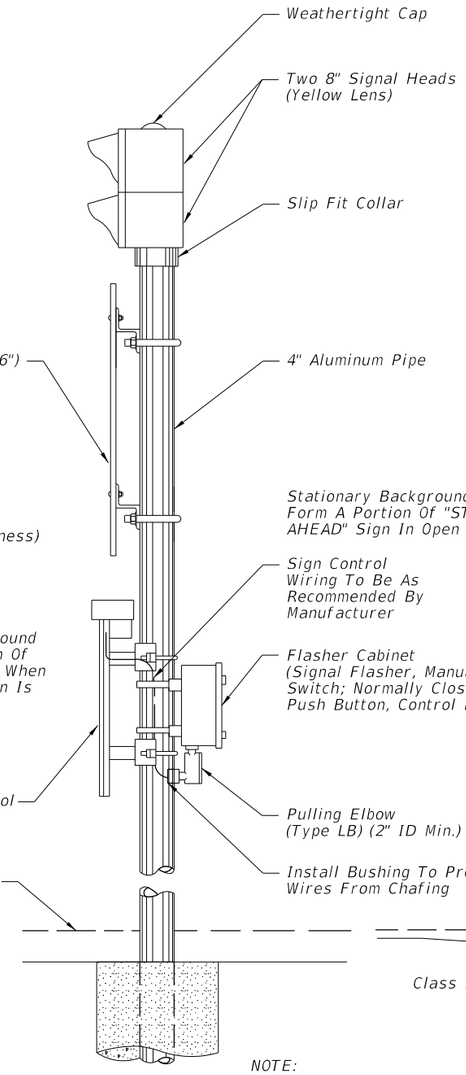

SIDE VIEW

NOTE:
1. "STOP AHEAD" is standard and preferred sign message.

Another message may be approved when appropriate for specific situations.

PASSIVE STATE
(TRAIN CIRCUIT NOT ACTUATED)

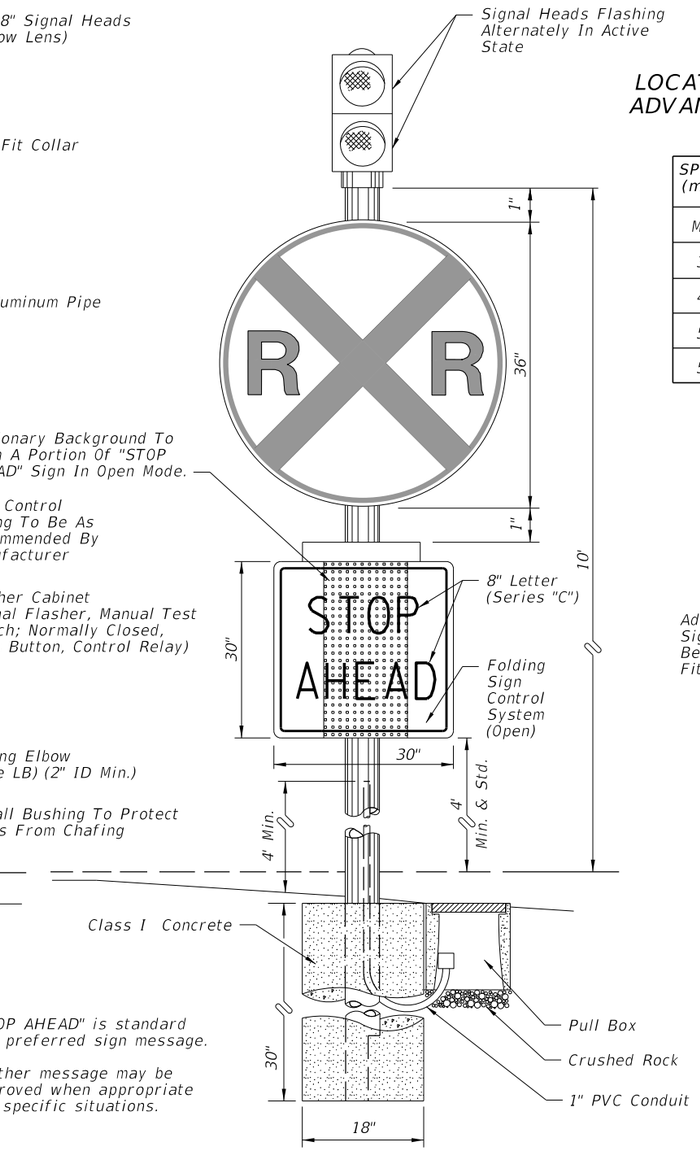

FRONT VIEW

ACTIVE STATE
(TRAIN CIRCUIT ACTUATED)

LOCATION OF THE ADVANCE WARNING SIGN

SPEED (mph)	DISTANCE (ft)
Min.	50
30	75
40	125
50	250
55	325

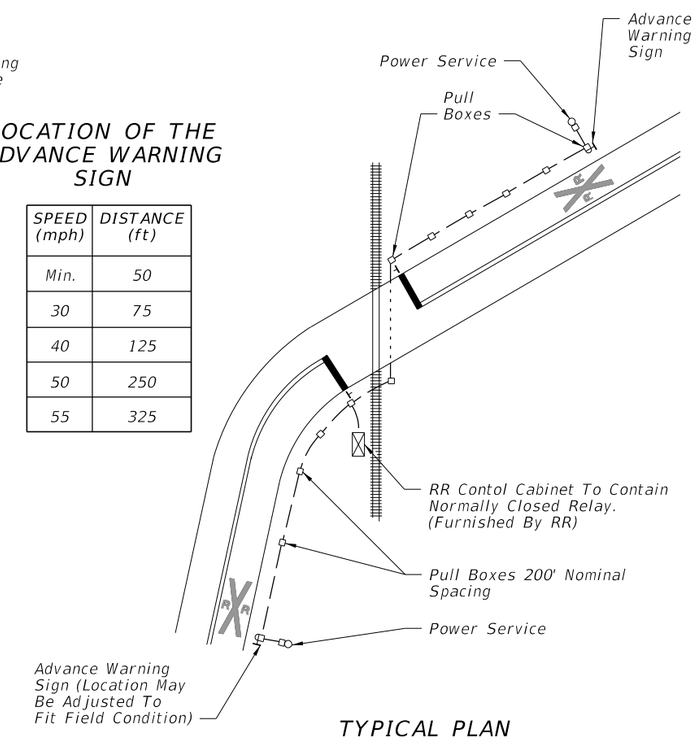

TYPICAL PLAN

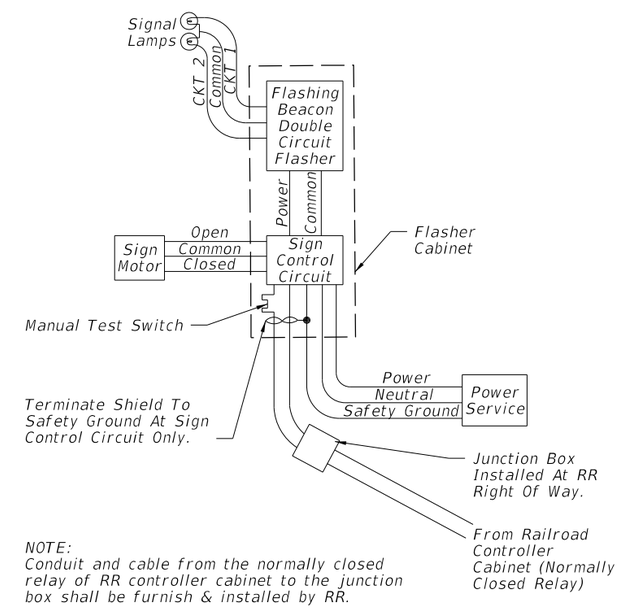

NOTE:
Conduit and cable from the normally closed relay of RR controller cabinet to the junction box shall be furnish & installed by RR.

FUNCTIONAL BLOCK DIAGRAM

6/10/2015 10:32:38 AM

LAST REVISION	REVISION	DESCRIPTION:			INDEX NO.	SHEET NO.
07/01/05			FDOT 2016 DESIGN STANDARDS	ADVANCE WARNING FOR R/R CROSSING	17881	1 of 1

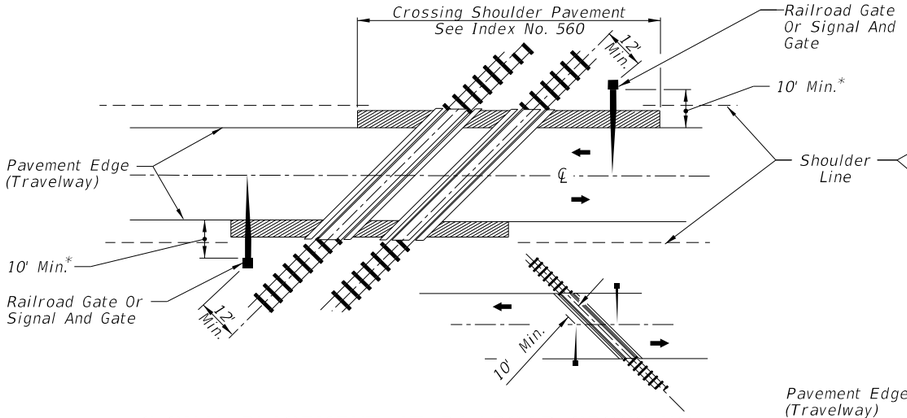

SIGNAL PLACEMENT AT RAILROAD CROSSING
(2 - LANE DESIGN)

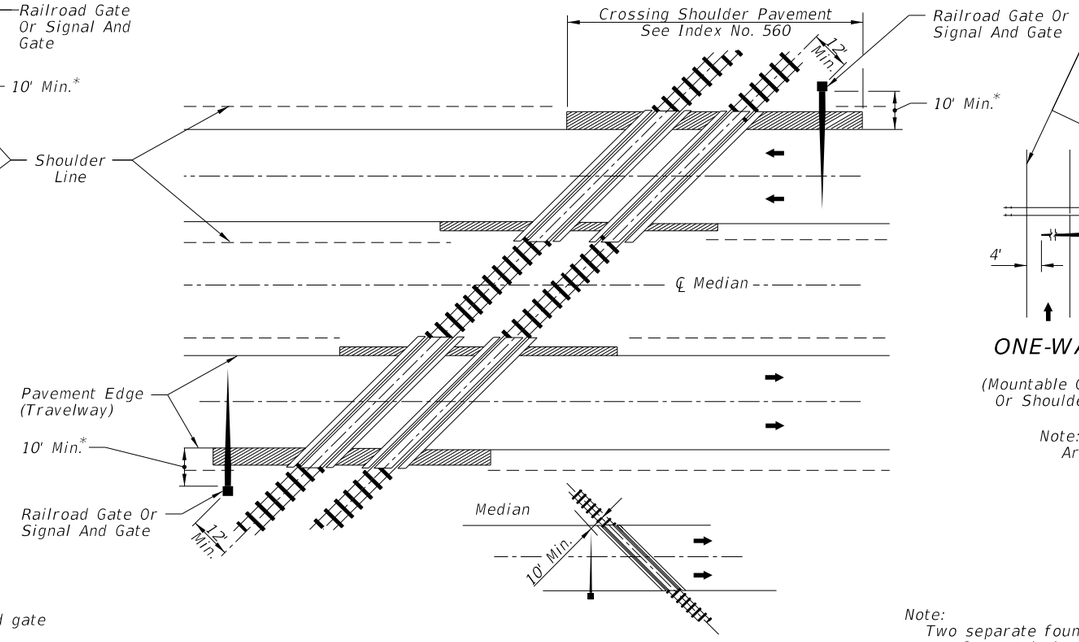

SIGNAL PLACEMENT AT RAILROAD CROSSING
(4 - LANE DESIGN)

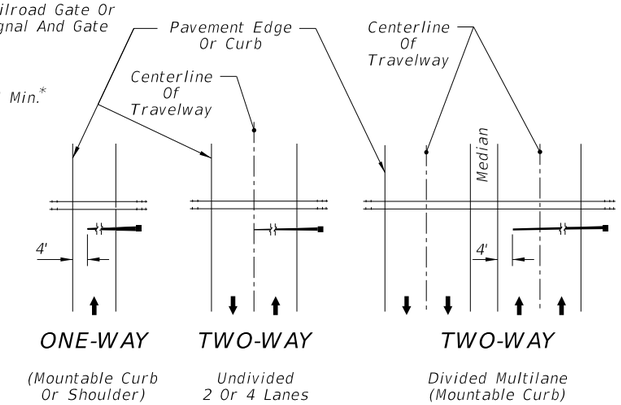

Note:
Arrows denote direction of travel not pavement markings.

FIGURE 1

Gate Length Requirements
See Note 5 Sheet 3

General Notes

1. No guardrail is proposed for signals; however, some form of impact attenuation device may be specified for certain locations.
2. Advance flasher to be installed when and if called for in plans or specifications.
3. Top of foundation shall be no higher than 4" above finished shoulder grade.
4. Type of traffic control device
   I Flashing signals
   II Flashing signals with cantilever
   III Flashing signals with gate
   IV Flashing signals with cantilever and gate
   V Gate
5. Class of traffic control devices
   I Flashing signals-one track
   II Flashing signals-multiple tracks
   III Flashing signals and gates-one track
   IV Flashing signals and gates-multiple tracks

Note:
Two separate foundations may be required (one for signals, one for gate), depending on type of equipment used.

* When 10' is deemed impracticle the control device can be located as close as 2' from the edge of a paved shoulder but not less than 6' from the edge of the near traffic lane.

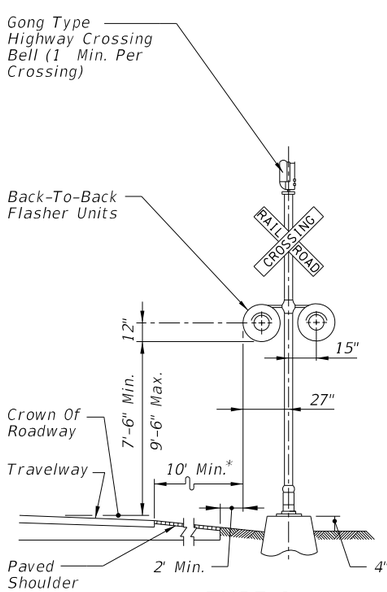

TYPE I

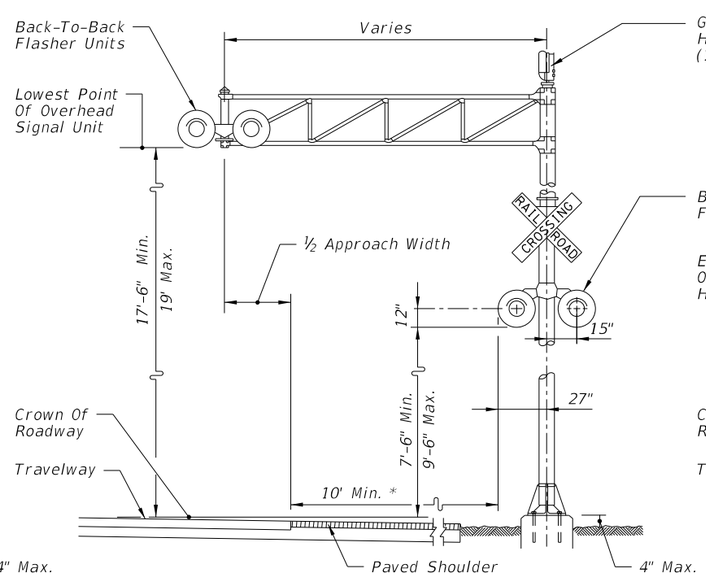

TYPE II

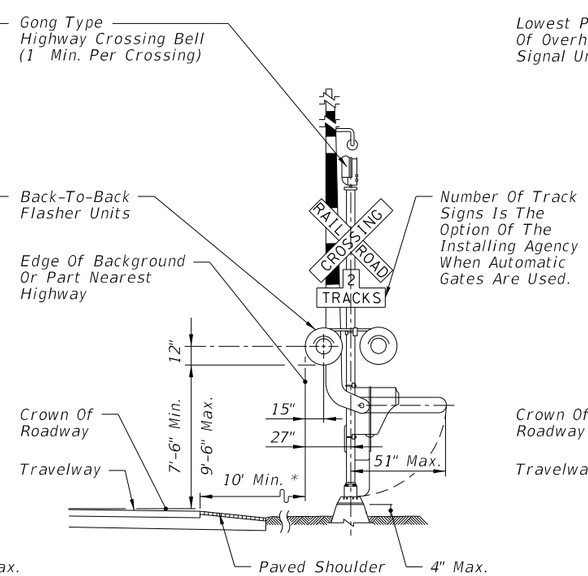

TYPE III

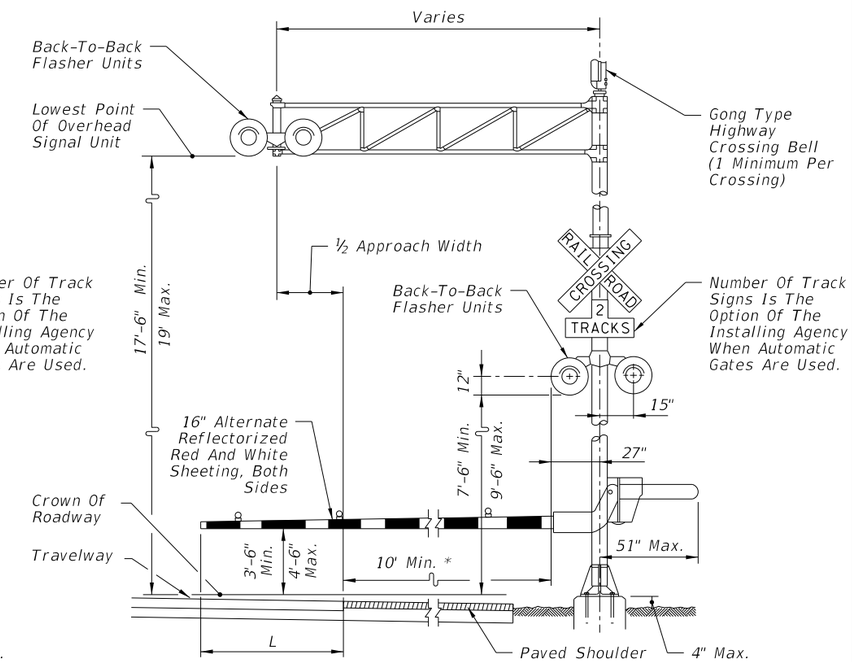

TYPE IV

LAST REVISION	REVISION	DESCRIPTION:			INDEX NO.	SHEET NO.
07/01/13			FDOT 2016 DESIGN STANDARDS	RAILROAD GRADE CROSSING TRAFFIC CONTROL DEVICES	17882	1 of 4

6/10/2015 10:34:05 AM

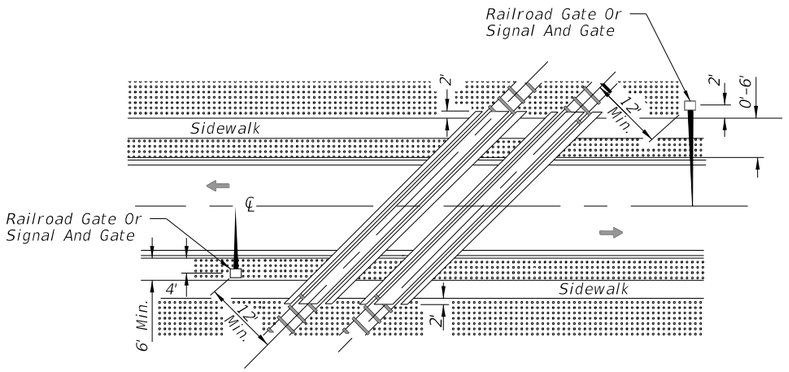

ACUTE ANGLE (AND RIGHT ANGLE)

SIGNAL PLACEMENT AT RAILROAD CROSSING
(2 LANES, CURB & GUTTER)

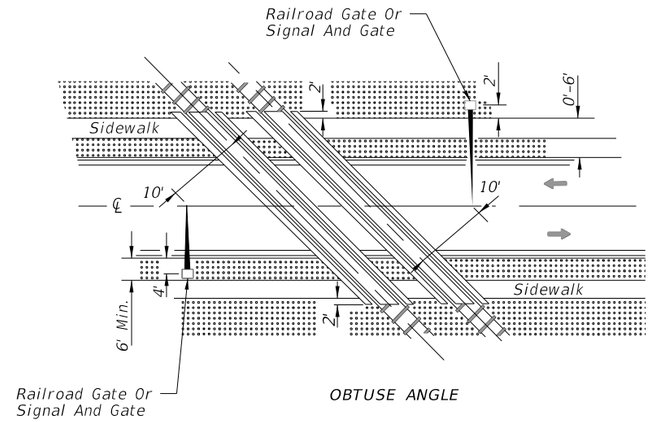

OBTUSE ANGLE

SIGNAL PLACEMENT AT RAILROAD CROSSING
(2 LANES, CURB & GUTTER)

GENERAL NOTES

1. The location of flashing signals and stop lines shall be established based on future (or present) installation of gate with appropriate track clearances.
2. Where plans call for railroad traffic control devices to be installed in curbed medians, the minimum median width shall be 12'-6".
3. Location of railroad traffic control device is based on the distance available between face of curb & sidewalk. 0' to 6' - Locate device outside sidewalk. Over 6' - Locate device between face of curb and sidewalk.
4. Stop line to be perpendicular to edge of roadway, approx. 15' from nearest rail; or 8' from and parallel to gate when present.
5. When a cantilevered-arm flashing-light signal is used, the minimum vertical clearance shall be 17'-6" from above the Crown of Roadway to the Lowest Point of the Overhead Signal Unit.

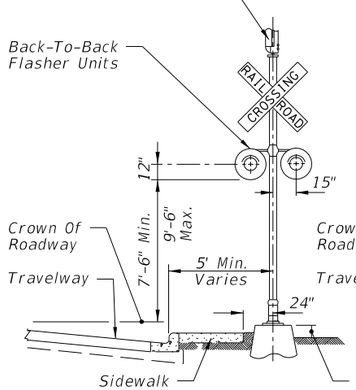

TYPE I

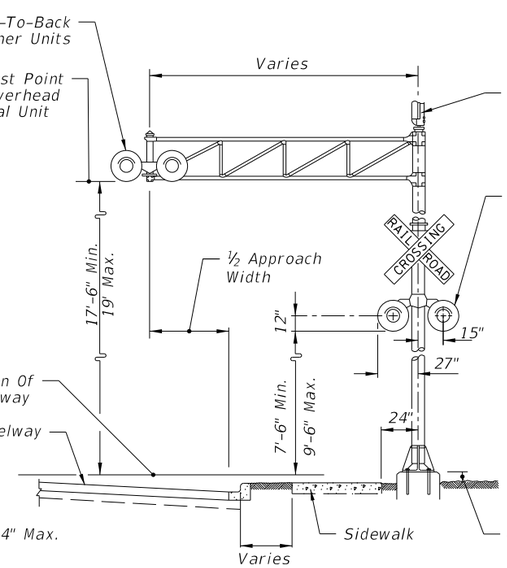

TYPE II

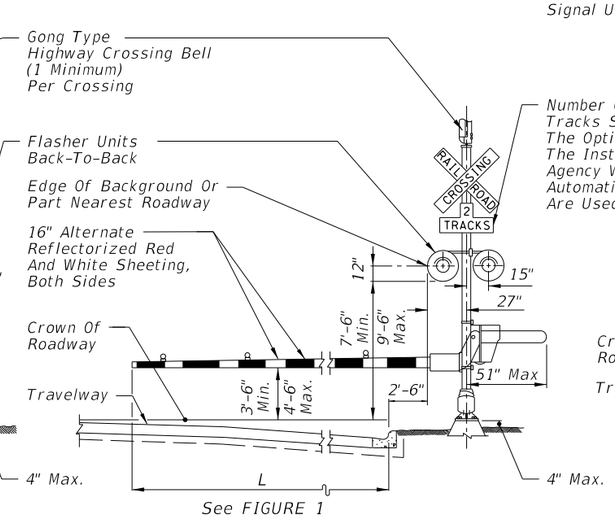

TYPE III

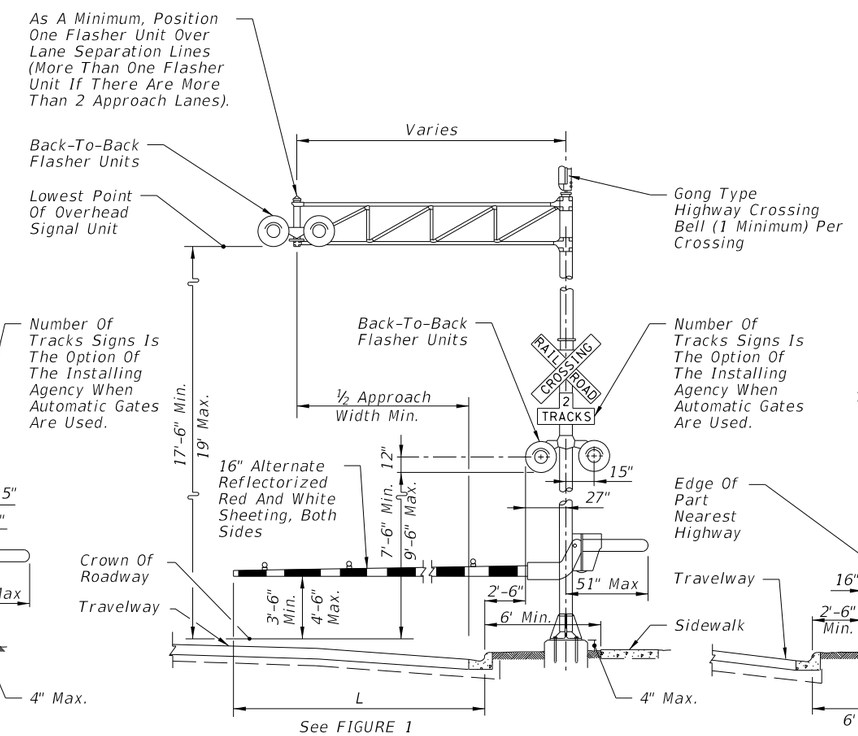

TYPE IV

TYPE V

10:34:06 AM

6/10/2015

LAST REVISION	REVISION	DESCRIPTION:			INDEX NO.	SHEET NO.
07/01/14			FDOT 2016 DESIGN STANDARDS	RAILROAD GRADE CROSSING TRAFFIC CONTROL DEVICES	17882	2 of 4

RAILROAD CROSSING AT TWO (2)-LANE ROADWAY

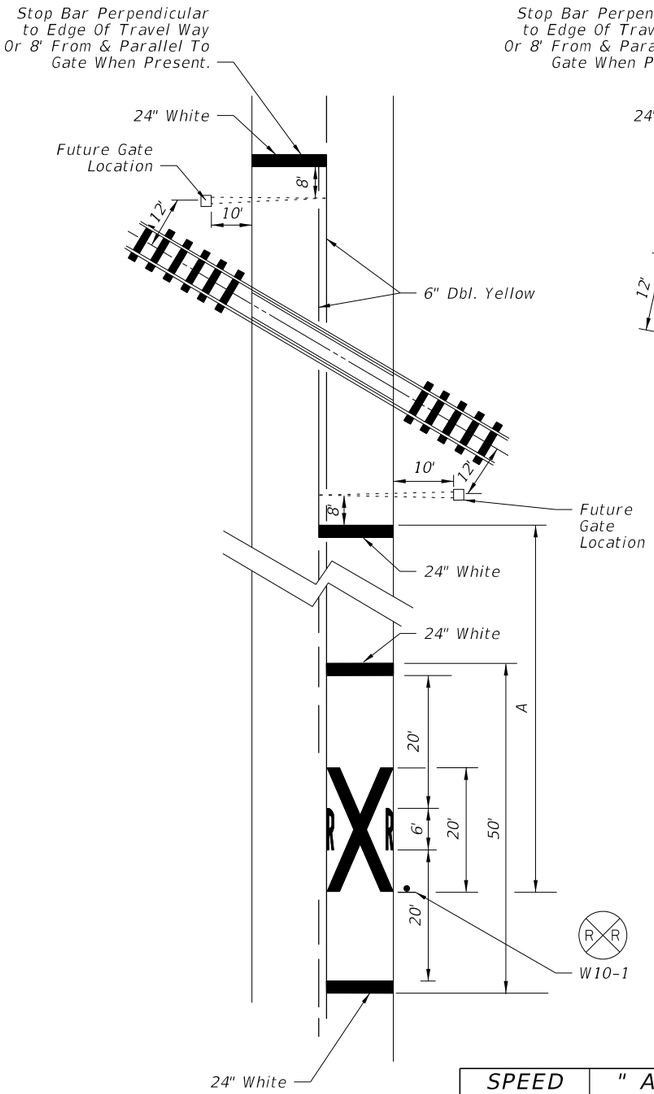

RAILROAD CROSSING AT MULTILANE ROADWAY

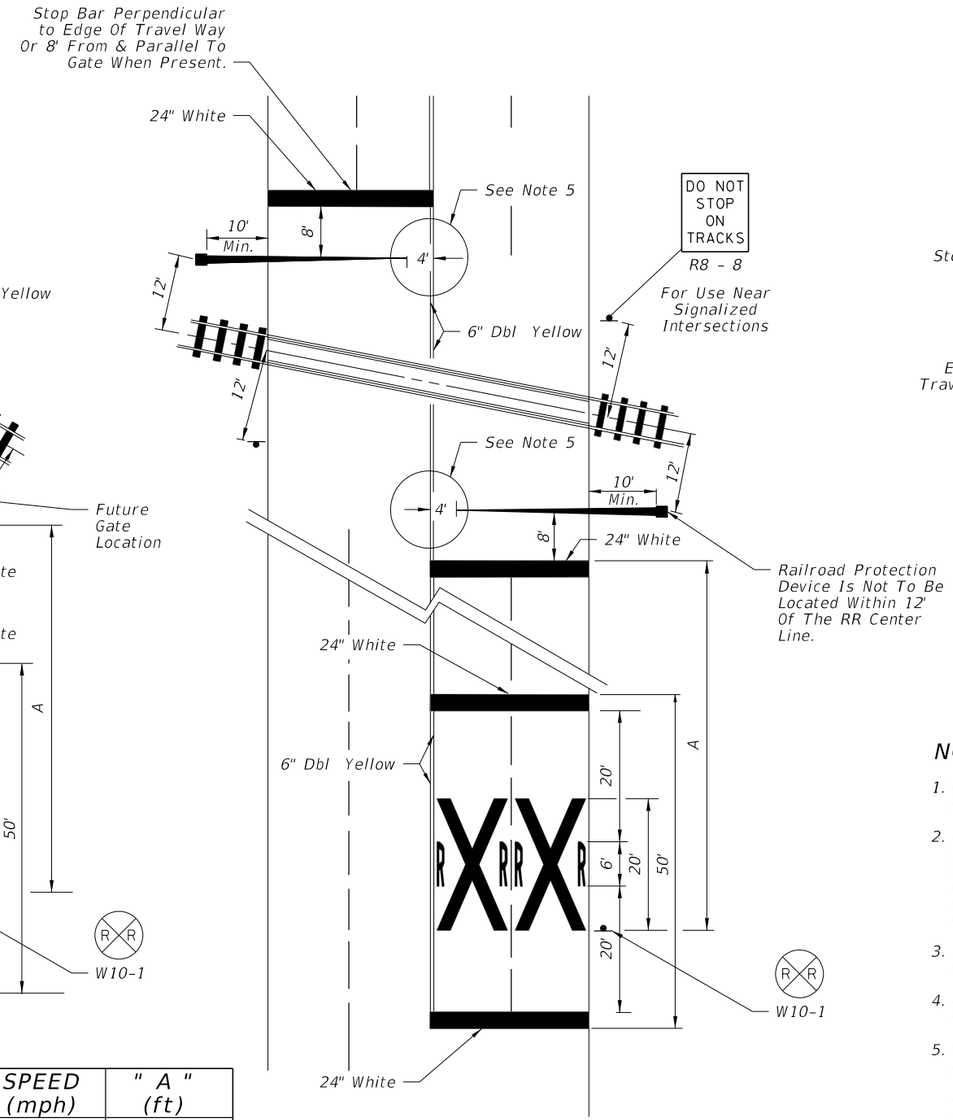

SPEED (mph)	" A " (ft)
60	400
55	325
50	250
45	175
40	125
35	100
URBAN	85 MIN.

RELATIVE LOCATION OF CROSSING TRAFFIC CONTROL DEVICES

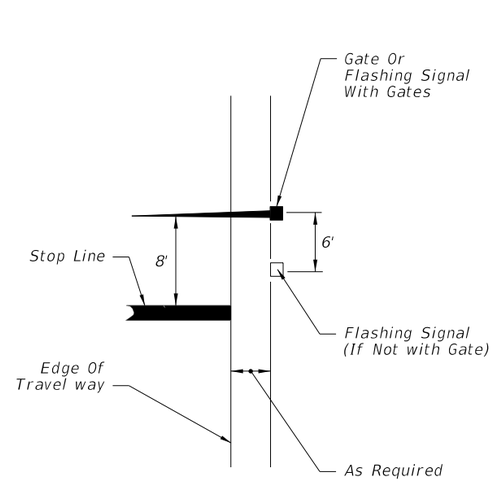

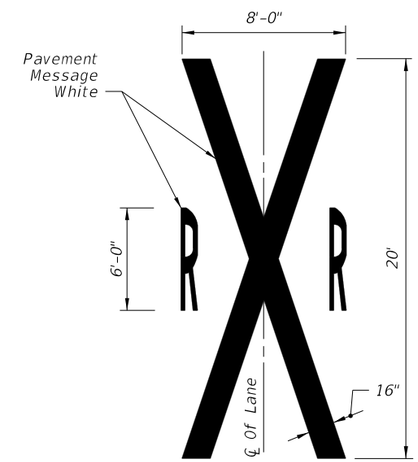

NOTES:

1. When computing pavement message, quantities do not include traverse lines.
2. Placement of sign W10-1 in a residential or business district, where low speeds are prevalent, the W10-1 sign may be placed a minimum distance of 100' from the crossing. Where street intersections occur between the RR pavement message and the tracks an additional W10-1 sign and additional pavement message should be used.
3. A portion of the pavement markings symbol should be directly opposite the W10-1 sign.
4. Recommended location for FTP-61-06 or FTP-62-06 signs, 100' urban and 300' rural. See Index 17355 for sign details.
5. Gate Length Requirements:
   For Two-way undivided sections:
   The gate should extend to within 1' of the center line. On multiple approaches the maximum gate length may not reach to within 1' of the center line. For those cases, the distance from the gate to the center line shall be a maximum of 4'.

   For one-way or divided sections:
   The gate shall be of sufficient length such that the distance from the gate tip to the inside edge of pavement is a maximum of 4'.

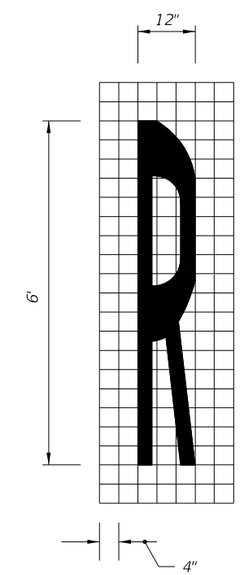

10:34:07 AM

6/10/2015

LAST REVISION	REVISION	DESCRIPTION:			INDEX NO.	SHEET NO.
07/01/10			FDOT 2016 DESIGN STANDARDS	RAILROAD GRADE CROSSING TRAFFIC CONTROL DEVICES	17882	3 of 4

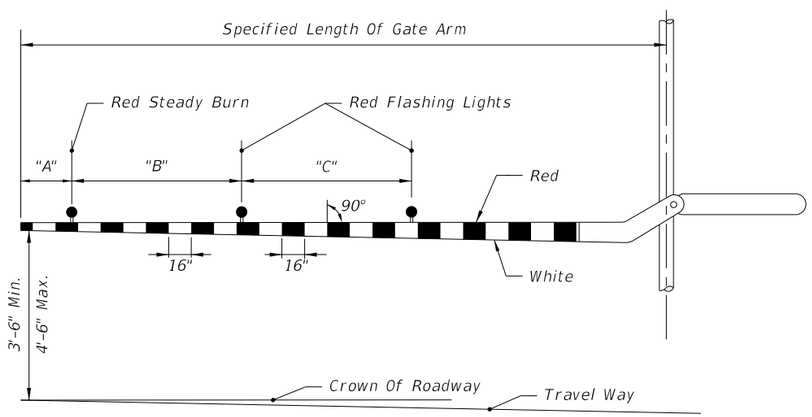

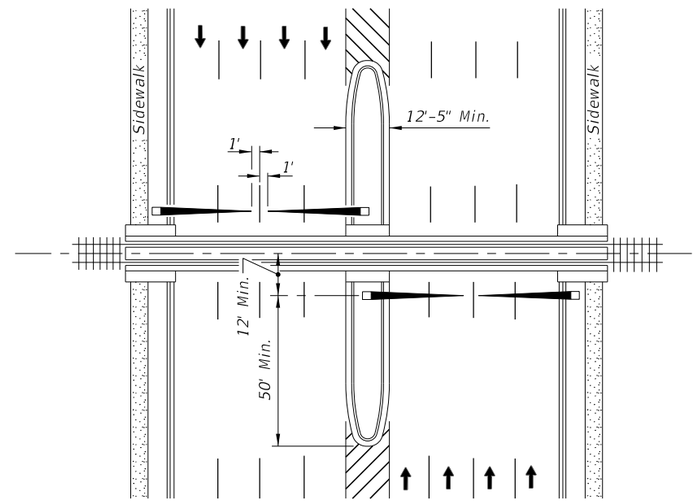

PLAN

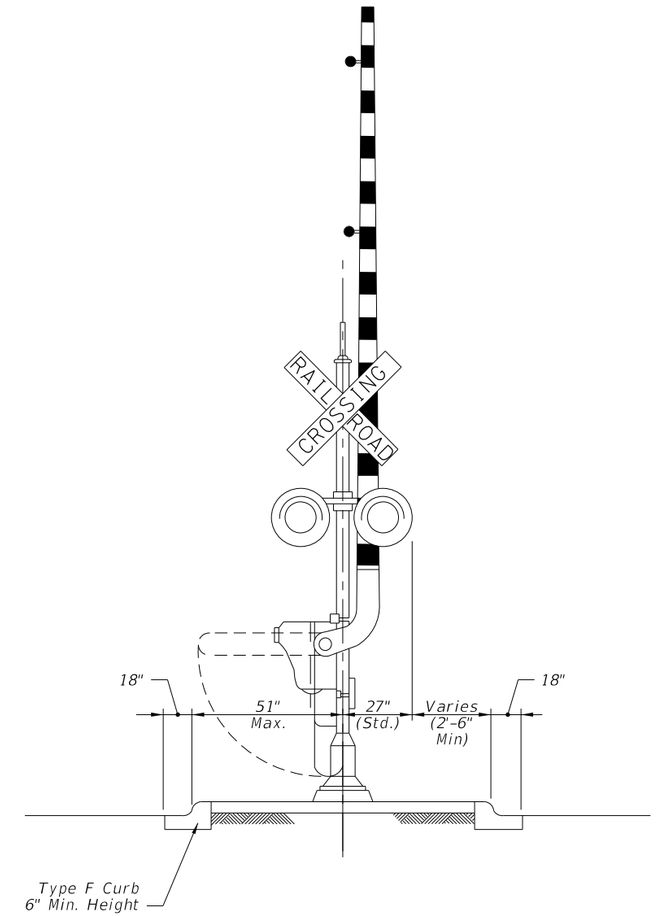

MEDIAN SECTION AT SIGNAL GATES

RAILROAD GATE ARM LIGHT SPACING

Specified Length Of Gate Arm	Dimension "A"	Dimension "B"	Dimension "C"
14 Ft.	6"	36"	5'
15 Ft.	18"	36"	5'
16-17 Ft.	24"	36"	5'
18-19 Ft.	28"	41"	5'
20-23 Ft.	28"	4'	5'
24-28 Ft.	28"	5'	5'
29-31 Ft.	36"	6'	6'
32-34 Ft.	36"	7'	7'
35-37 Ft.	36"	9'	9'
38 And Over	36"	10'	10'

NOTE:
For additional information see the "Manual On Uniform Traffic Control Devices", Part 8; The "Traffic Control Handbook" , Part VIII; and AASHTO "A Policy On Geometric Design Of Streets And Highways".

MEDIAN SIGNAL GATES FOR

MULTILANE UNDIVIDED URBAN SECTIONS

(THREE OR MORE DRIVING LANES IN ONE DIRECTION, 45 MPH OR LESS)

6/10/2015 10:34:07 AM

LAST REVISION	REVISION	DESCRIPTION:			INDEX NO.	SHEET NO.
01/01/12			FDOT 2016 DESIGN STANDARDS	RAILROAD GRADE CROSSING TRAFFIC CONTROL DEVICES	17882	4 of 4

TYPICAL BRIDGE MOUNTS

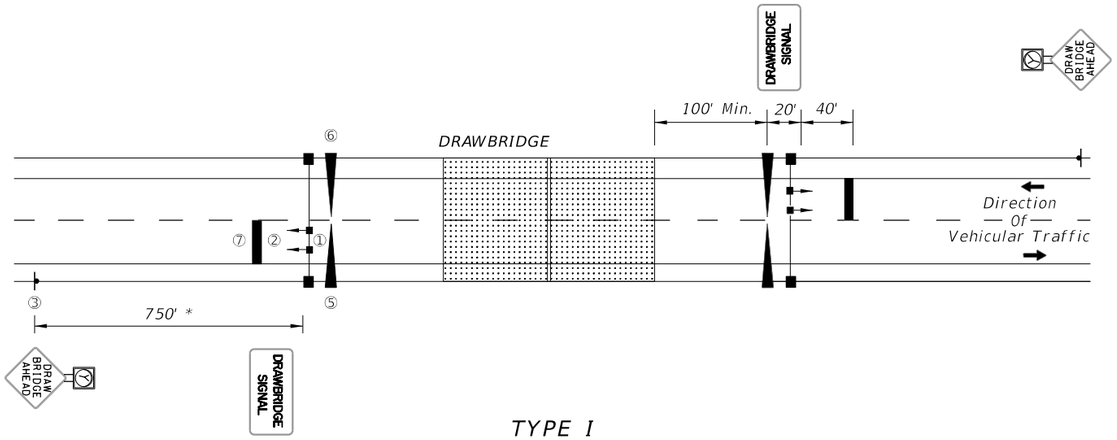

TYPE I

TO BE USED WHERE BRIDGE OPERATORS ARE FULL TIME OR A DAILY BASIS.

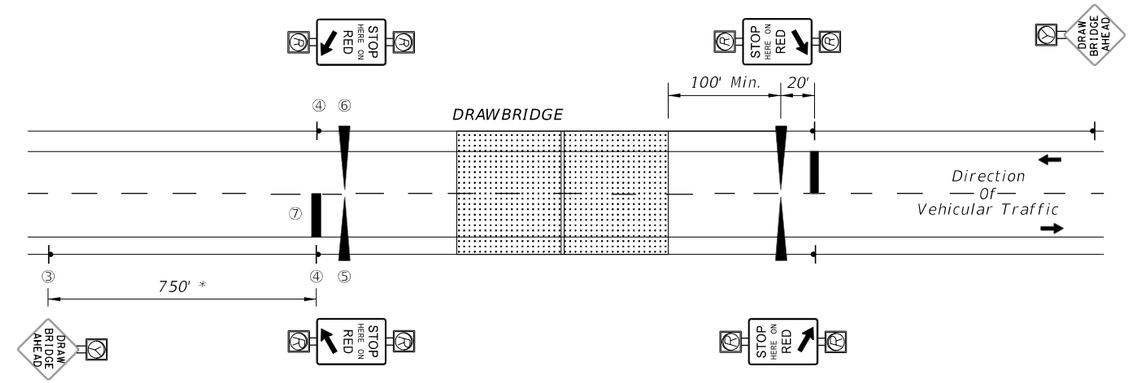

TYPE II

TO BE USED WHERE TYPE I IS NOT APPLICABLE (USUALLY WHEN THE BRIDGE OPERATOR IS "ON CALL").

LEGEND:

① TRAFFIC SIGNALS } Mast Arm Mounted (Off Bridge)
② DRAWBRIDGE SIGN } Monotube Support Mounted (On Bridge)
③ DRAWBRIDGE AHEAD SIGN WITH YELLOW FLASHING BEACON } Ground Mounted
④ STOP HERE ON RED SIGN WITH RED FLASHING BEACONS } Ground Mounted
⑤ ENTRANCE GATE
⑥ EXIT GATE
⑦ 24" THERMOPLASTIC STOP BAR

W8-5
SLIPPERY WHEN WET SIGN
See Note 11

NOTES:

1. A bypass switch shall be installed to override each timing interval in case of a malfunction.
2. "STOP HERE ON RED" is omitted in Type I operation and "TRAFFIC SIGNALS" are omitted in Type II operation.
3. The time between beginning of flashing yellow on "Drawbridge Ahead" sign and the clearance of traffic signal to red, or beginning of flashing red should not be less than the travel time of a passenger car, from the sign location to the stop line, traveling at the 85 percentile approach speed.
4. Beginning of operation of drawbridge gates shall not be less than 15 seconds after steady red or 20 seconds after flashing red (Actual time may be determined by the bridge tender.)
5. Time of gate lowering and raising is dependent upon gate type.
6. Time of bridge opening is determined by the bridge tender.
7. Each gate shall be operated by a separate switch.
8. On each approach (Type II), all four red signals shall be on the same two circuit flashers, with the two top signals on one circuit, and the two bottom signals on the alternately flashing circuit.
9. A Drawbridge Ahead sign is required for both types of signal operation, However a flashing beacon shall be added to the sign when physical conditions prevent a driver traveling at the 85% approach speed from having continuous view of at least one signal indication for approximately 10 seconds.
10. Requirements on gate installation are contained in Section 4I of the "Manual on Uniform Traffic Control Devices".
11. "In accordance with Traffic Engineering Manual (Topic Number 750-000-005) Section 2.1, SLIPPERY WHEN WET SIGNS shall be placed in advance of all MOVABLE and NONMOVABLE STEEL DECK BRIDGES."

* Field conditions may require adjustment of this standard distance.

SEQUENCE CHART

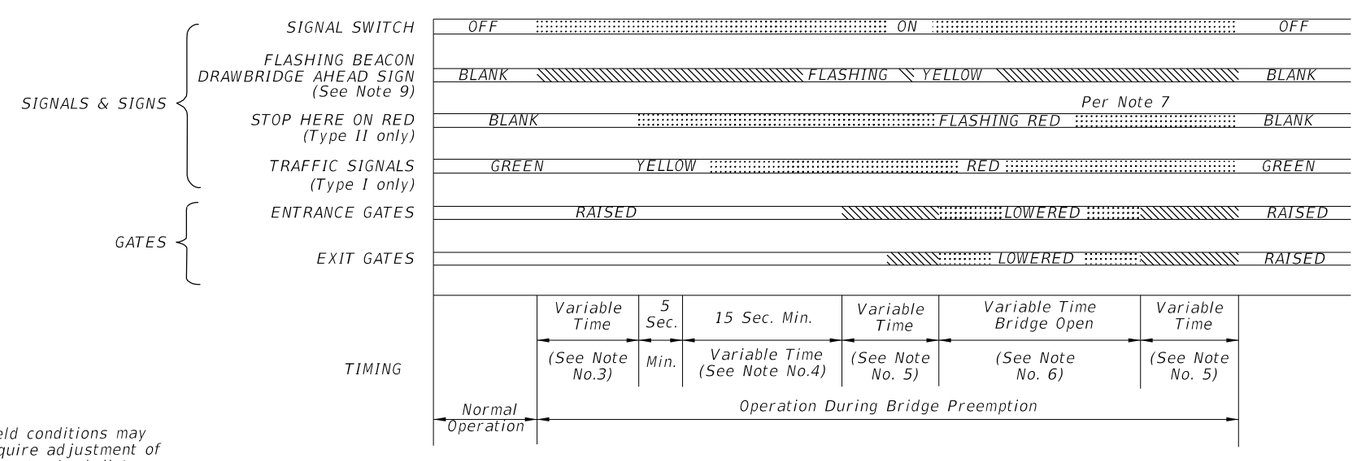

LAST REVISION	REVISION	DESCRIPTION:			INDEX NO.	SHEET NO.
07/01/07			FDOT 2016 DESIGN STANDARDS	TRAFFIC CONTROL DEVICES FOR MOVABLE SPAN BRIDGE SIGNALS	17890	1 of 3

6/10/2015 10:34:34 AM

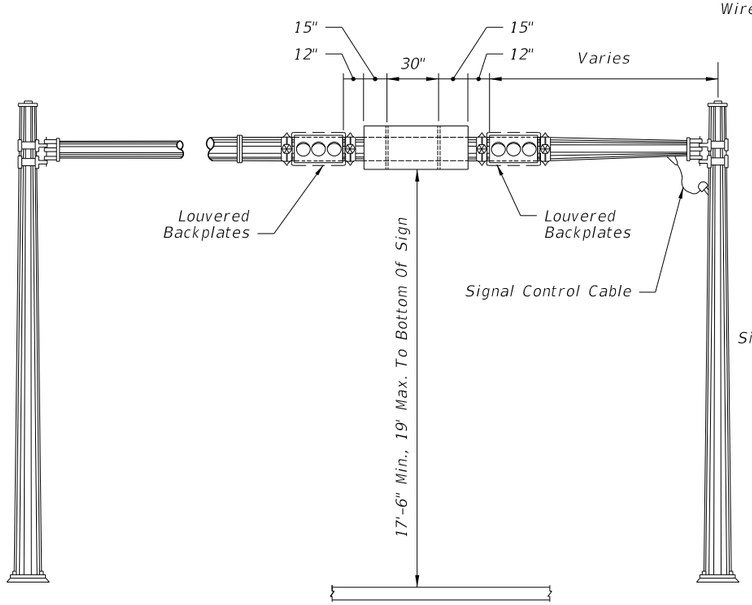

FIGURE - A

MONOTUBE SUPPORT MOUNTING

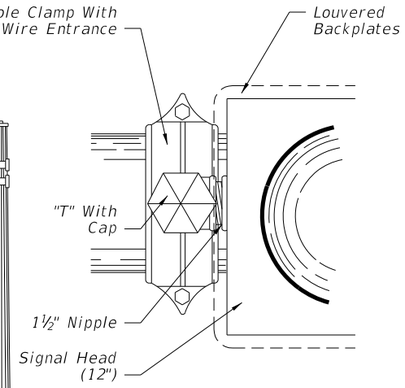

FIGURE - C

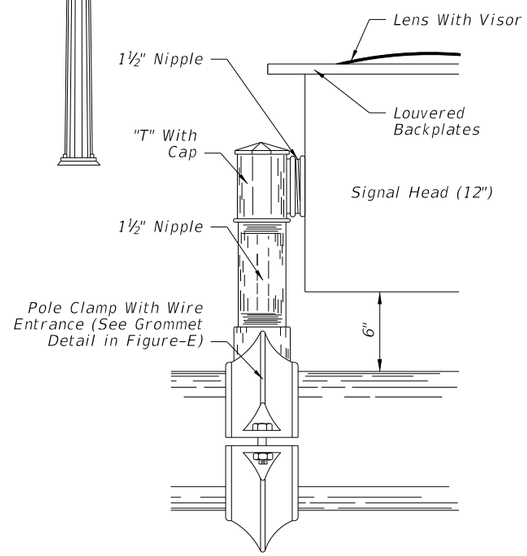

FIGURE - D

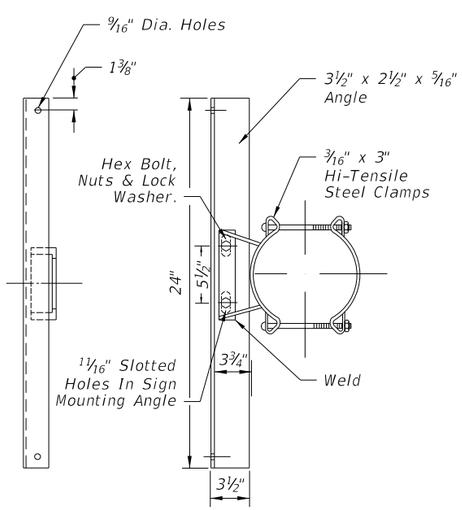

FIGURE - B

SIGN PANEL MOUNTING ASSEMBLY

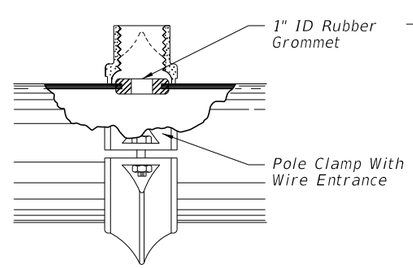

FIGURE - E

SIGNAL HEAD MOUNTING ASSEMBLY

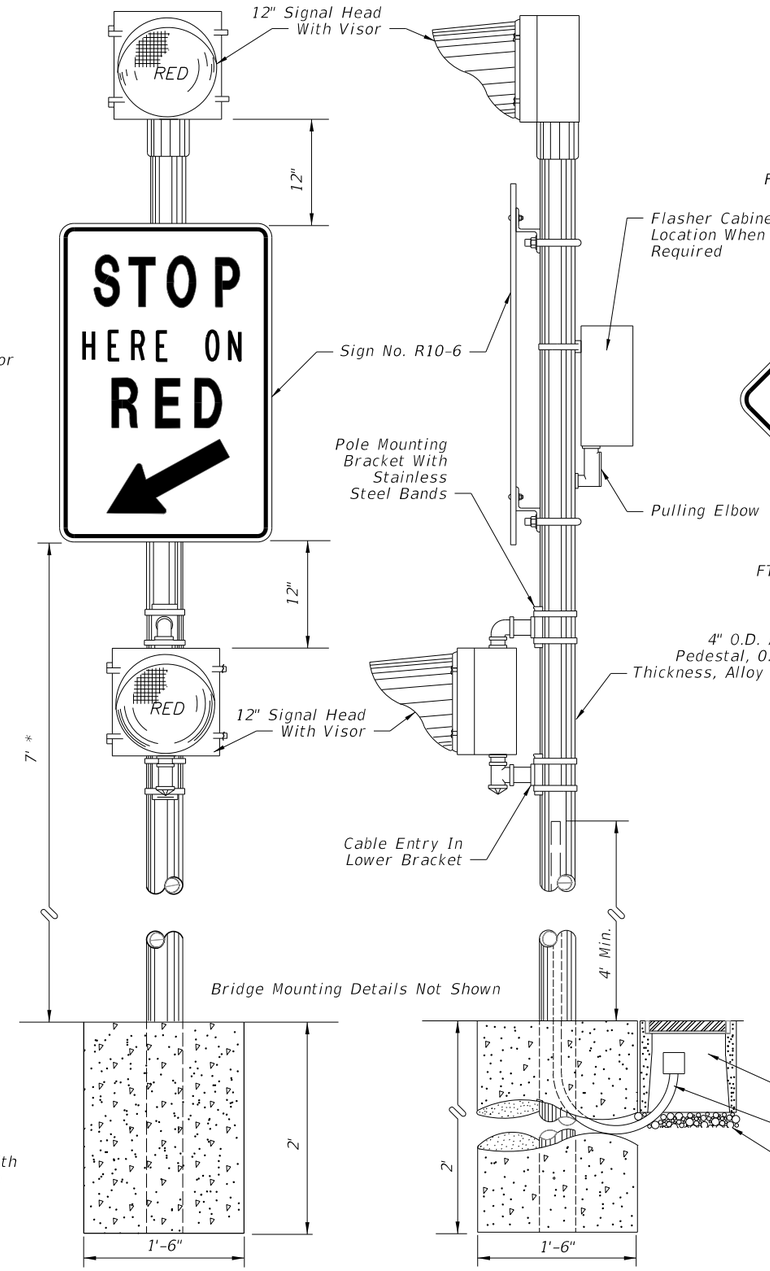

FIGURE - F

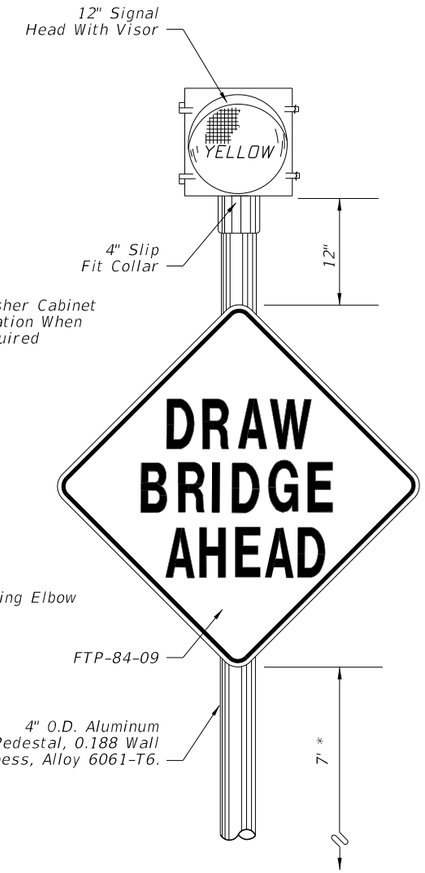

FIGURE - G

* Measured from the bottom of the sign to the near edge of the pavement. Horizontal distance between edge of the pavement and inside edge of sign will vary with condition at job site.

LAST REVISION	REVISION	DESCRIPTION:			INDEX NO.	SHEET NO.
01/01/12			FDOT 2016 DESIGN STANDARDS	TRAFFIC CONTROL DEVICES FOR MOVABLE SPAN BRIDGE SIGNALS	17890	2 of 3

6/10/2015 10:34:35 AM

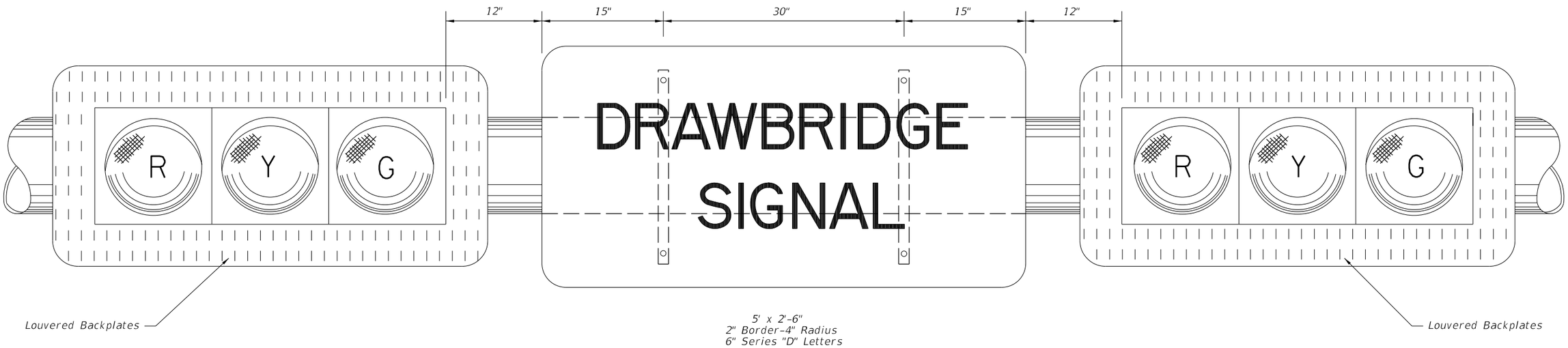

BLACK OPAQUE LEGEND AND BORDER ON REFLECTORIZED YELLOW BACKGROUND
TO BE USED WITH TYPE I OPERATION, AS SHOWN ON PREVIOUS SHEET
MONOTUBE SUPPORT MOUNTING

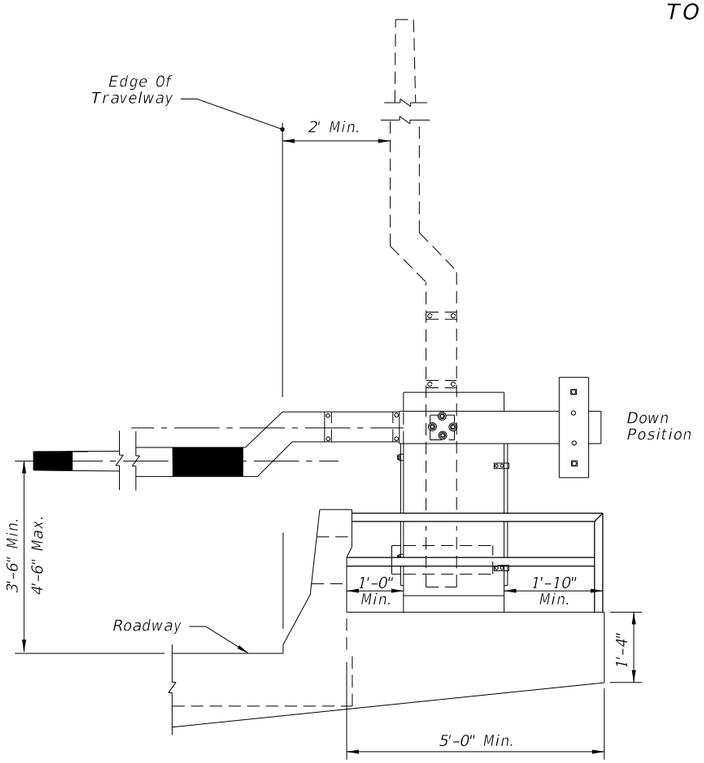

GATE & ARM DETAIL

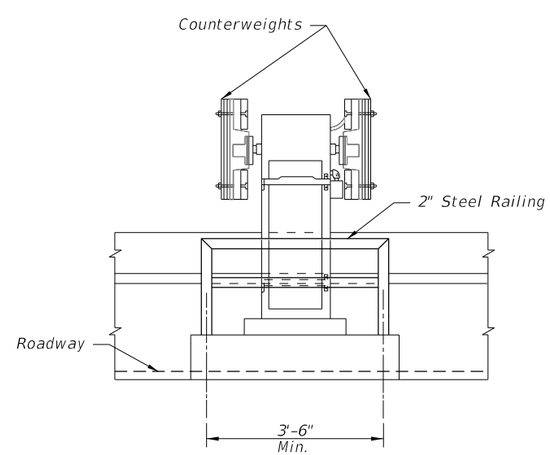

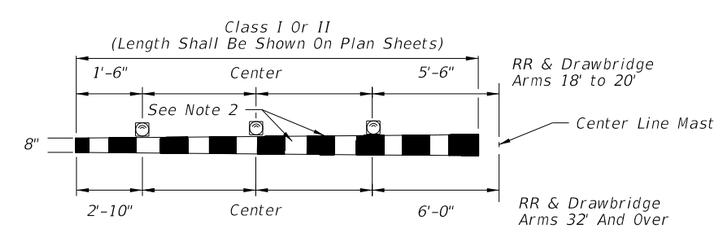

NOTES:

1. 12 volt flashing red lights shall be mounted on gate arm and shall operate in the flashing mode only when gate arm is in the lower position or in the process of being lowered. The number of lights shall vary accordingly to length of the gate arm.

2. Alternating 16" pattern of fully reflectorized red and white stripes.

TYPICAL LAMP PLACEMENT

6/10/2015 10:34:36 AM

LAST REVISION	REVISION	DESCRIPTION:			INDEX NO.	SHEET NO.
07/01/14			FDOT 2016 DESIGN STANDARDS	TRAFFIC CONTROL DEVICES FOR MOVABLE SPAN BRIDGE SIGNALS	17890	3 of 3